EFFECT OF COMPUTER-AIDED PERSPECTIVE DRAWINGS ON SPATIAL ORIENTATION AND PERSPECTIVE DRAWING ACHIEVEMENT

Aytaç Kurtuluş
Eskişehir OsmangaziUniversity, Turkey
agunaydi@ogu.edu.tr

ABSTRACT
The aim of this study is to investigate the effect of computer-aided Perspective Drawings on eighth grade primary school students' achievement in Spatial Orientation and Perspective Drawing. The study made use of pre-test post-test control group experimental design. The study was conducted with thirty 8th grade students attending a primary school in Turkey in 2009-2010 school year. The lessons of the control group students (n=15) were performed in an activity based way by using the board and paper for two weeks (8 class hours). In the lessons of the experimental group students (n=15), on the other hand, Perspective Drawing applications were carried out using computer-aided teaching method for two and a half weeks (10 class hours). A Spatial Orientation test was used to monitor the students' achievement in Spatial Orientation and a Perspective Drawing test was used to examine their achievement in Perspective Drawing. According to the results from the analyses, both Spatial Orientation and Perspective Drawing achievement levels of the subjects increased significantly in both the experimental group and the control group. However, it was determined that there was a statistically significant difference between the Spatial Orientation test rank-score means and the Perspective Drawing test rank-score means of the experimental group students and the control group students. It was concluded in light of these findings that computer-aided Perspective Drawings increased student achievement in Spatial Orientation and perspectivity.

INTRODUCTION

McGee (1979) describes spatial ability as "mentally moving, rotating or reversing the visual stimuli." Spatial ability is used in our everyday life (driving, taking photos, playing computer games, etc.), in many professions (architecture, engineering, music, piloting, etc.) and in scientific branches (mathematics, chemistry, biology, physics, etc.). The connection of spatial ability with geometry gains more significance when we consider the fact that two- and three-dimensional objects are studied in geometry. Assuming that spatial visualization and Spatial Orientation are two components of spatial ability, McGee (1979) states that what distinguishes spatial visualization from Spatial Orientation is motion of the object. If there is process of mentally moving all the parts of an object that is seen and touched, that involves spatial visualization. Spatial Orientation does not involve the movement of the object in the mind. It is the activity of visualizing an image resulting from the change in perspective/point of view of the person looking at the object. Spatial Orientation, in short, involves looking at a motionless object from a different perspective . Strong and Smith (2002), mentions swimmers' knowing about their position while changing direction or turning in water and pilots' awareness of the position of the land while maneuvering among the examples of Spatial Orientation. They state that we can understand Spatial Orientation by working on the relations among different positions in comparison with our position. Clements (1999), on the other hand, defines Spatial Orientation ability as being able to comprehend and use the interrelations of the objects located in various positions around the individual. He also emphasizes that the investigative individual's ability to comprehend and use these relations should be evaluated according to his or her own position in particular.

The size effect of any object on the eye depends on the distance between that object and the eye. In fact, of two identical objects, the one closer to the eye (in comparison with the one further from the eye) seems bigger. Having different images of identical objects at different distances from the eye is also the case for the closer and further points of a single object. Therefore, in addition to the actual shape and size, every object has an image that emerges based on the distance and perspective of the person seeing the object. Picturing an object in the way it is perceived by the eye in certain conditions is called "Perspective" (Onat, 1975). Perspective Drawing is a technique used to represent three-dimensional images on a two-dimensional picture plane. Perspective Drawings typically have a horizon line. This line, directly opposite the viewer's eye, represents objects infinitely far away. They have shrunk, in the distance, to the infinitesimal thickness of a line. Any perspective representation of a scene that includes parallel lines has one or more vanishing points in a Perspective Drawing. A one-point Perspective Drawing means that the drawing has a single vanishing point, usually directly opposite the viewer's eye and usually on the horizon line. All lines parallel with the viewer's line of sight recede to the horizon towards this vanishing point. This is the standard "receding railroad tracks" phenomenon. A two-point drawing would have lines parallel to two different angles. Any numbers of vanishing points are possible in a drawing, one for each set of parallel lines that are at an angle relative to the plane of the drawing. Perspectives consisting of many

Copyright © The Turkish Online Journal of Educational Technology

parallel lines are observed most often when drawing architecture (architecture frequently uses lines parallel to the x, y, and z axes). Because it is rare to have a scene consisting solely of lines parallel to the three Cartesian axes (x, y, and z), it is rare to see perspectives in practice with only one, two, or three vanishing points; even a simple house frequently has a peaked roof which results in a minimum of six sets of parallel lines, in turn corresponding to up to six vanishing points. Since this study was conducted with 8th grade students, the scope of the study was limited to one-point and two-point Perspective Drawing subjects.

The basics of drawing forms in one-point perspective;

- One face of the object is shown as the front view,
- Lines parallel to the front view remain parallel,
- Lines that are perpendicular to the front view converge at a single vanishing point.

Figure 1 shows a sample technical one point perspective drawing.

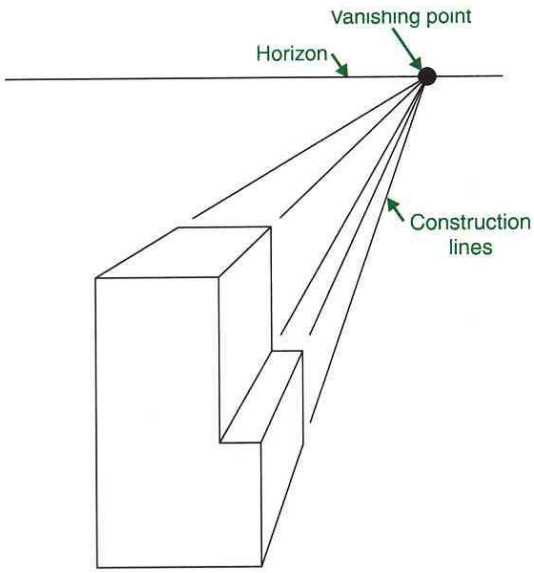

Figure 1: One point Perspective Drawing

The basics of drawing forms in two-point perspective;

- One edge of the object is place in front,
- The two faces that meet at this edge recede to two different vanishing points,
- All lines parallel to each face go to the different vanishing points

Figure 2 shows a sample technical two point perspective drawing.

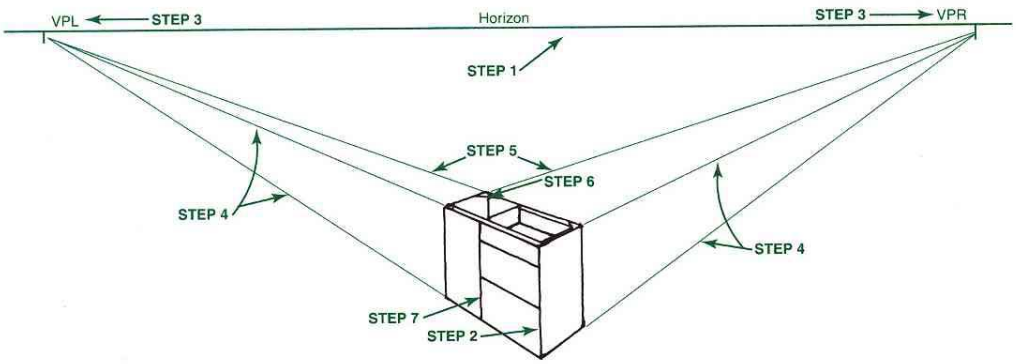

Figure2: Two point Perspective Drawing

It is difficult to teach space geometry with tools like paper and pencil in the traditional classroom environment. For this reason, this kind of teaching lacks drawings of a three-dimensional object on a plain paper and this situation leads to optical illusions and different perceptions. Moreover, no matter how perfect these drawings are, seeing the images of shapes from different perspectives in a single drawing is not possible due to the static nature of the environment. In order to develop students' skills of imagining three-dimensional objects in their mind and processing them mentally, dynamic geometry software should be used in lessons instead of static diagrams (Baki, Kösa & Karakuş, 2008).

Dynamic geometry programs allow students to reach assumptions and inferences on geometric shapes with drag-and-drop processor by means of several constructive activities and guiding questions in learning environments (Bintaş& Akıllı, 2008). The student gets to discover unchanging relations while changing the properties of a shape by means of dragging shapes. This discovery gives the student the opportunity to make a very strong assumption. Then the student can support this assumption with a number of examples or can refuse it (Karataş &Güven, 2008).

Dynamic geometry software applications allow the student to create various geometric shapes in virtual environment, to establish relations among these shapes, to establish a geometric port capable of proving a theorem with these relations and to alter this port as he or she wishes (Bintaş & Akıllı, 2008). Some studies conducted by using GSP software (July, 2001; Boyraz, 2008) report that GSP software is useful for developing spatial ability. GSP was also used in this study because it was assumed that by means of the dynamism of the GSP software perspective students would be able grasp the concepts in drawing better and their Spatial Orientation would be improved.

Recently, the Turkish Ministry of National Education has sought support to increase compulsory education to 12 years, as in many European and developed countries all over the world. On the other hand, initiated in 2003 by the Turkish Board of Education (TTKB, 2008) and implemented gradually, the renovation of elementary and secondary education curriculums was a huge leap in terms of raising the quality of education in Turkey. For example, renovated programs in elementary mathematics for grades 6–8 were implemented gradually (starting from the 6th grade) beginning from 2006 to 2007 academic year with ongoing changes since then. In the new elementary mathematics curriculum, some subjects are added as well as some of them are extracted. For instance, Perspective Drawing, patterns, tessellations, transformational geometry, fractals are added to the new curriculum for grades 6-8 (MEB, 2006). Perspective Drawing subject is given through the acquisition stated as "[the student] performs the Perspective Drawing of the image of a cube or a prism at a certain distance" under projection learning domain in 8th grade mathematics curriculum. The new curriculum, on the other hand, holds that the 8th grade student is able to perform of one-point and two-point Perspective Drawing of an object. In addition to changes in content, the new elementary mathematics curriculum emphasized new approaches like new skills, teacher students roles, instructional methods, and alternative assessment tools. The new curriculum aims to raise individuals who: have independent thinking, decision-making and self-regulation competencies and skills; can solve mathematical problems and use mathematical ideas to solve real-life problems; communicate about and with mathematics; make connections among mathematical ideas and apply them in contexts outside of mathematics; reason within and with mathematics. There are emphases on an equal balance of conceptual and computational understanding in mathematics, using alternative assessment techniques and technology to teach and learn mathematics. This shows that the new curriculum in Turkey promotes the use of technology in education.

The primary objective of this research is to investigate how computer-aided Perspective Drawings affect primary school 8th graders' achievement in perspectivity and Spatial Orientation within the framework of the acquisitions covered in the primary education mathematics. To this end, the study tried to find answers for the questions below.

1. Is there a significant difference between the experimental group students' pre-test and post-test rank-scores of Spatial Orientation test and Perspective Drawing?
2. Is there a significant difference between the control group students' pre-test and post-test rank-scores of Spatial Orientation test and Perspective Drawing?
3. Is there a significant difference between the Spatial Orientation post-test rank-scores of the experimental group students and the control group students?
4. Is there a significant difference between the Perspective Drawing post-test rank-scores of the experimental group students and the control group students?

METHODOLOGY

Pre-test/post-test control group experimental design was used in the study.

Participants

The research was conducted with a total of 30 students in two classes of a primary school in Kütahya, Turkey in 2009-2010 school years. One of these classes was randomly chosen as the control group and the other one as the experimental group. Also, the results from Mann Whitney U Test analysis, which was carried out in order to determine whether there was a significant difference between the Spatial Orientation and perspective questions pre-test rank-scores of the experimental group students and the control group students, were represented in Table 1 and Table 2.

Tablo 1. The Spatial Orientation pre-test scores of the experimental group and the control group

Measurement test	Groups	N	Mean	p-value
Spatial Orientation	Experimental Group	15	18,1	
Spatial Orientation	Control Group	15	12,9	0,106

Tablo 2. The Perspective Drawing pre-test scores of the experimental group and the control group

Measurement test	Groups	N	Mean	p-value
Perspective Drawing	Experimental Group	15	16	
Perspective Drawing	Control Group	15	15	0,775

The analysis came up with no significant difference between the pre-test rank-scores means of Spatial Orientation and Perspective Drawing tests (p>0,05). This meant that there was no significant difference between the experimental group students and the control group students in terms of achievement in spatial ability and perspectivity. It could therefore be suggested that these groups were equal according to the two variables.

The lessons of the experimental group students (n=15) were performed with computer-aided teaching method. The experimental group students were given the opportunity to produce Perspective Drawings by using Geometer's Sketchpad dynamic geometry software program because it was assumed that the software would help improve students' skills of processing three-dimensional objects by visualizing them mentally. The control group students (n=15), however, were taught in an activity-based way on paper. Perspective Drawing test and Spatial Orientation test were used as data collection instruments.

Data Collection Tools

One test was administered for measuring students' ability to perform egocentric perspective transformations. The Spatial Orientation test (The Perspective-taking Test) (Kozhevnikov& Hegarty, 2001) presents participants with a Picture of an array of objects. With the array in view, they are asked to imagine themselves standing at one object, facing a second one, and they had to indicate the angle to a third object by drawing an X. Each item consists of a circle with a line drawn from the center to the top of the circle. The center is marked with the object they are to imagine themselves standing at, the top is marked with the name of the object they are to imagine themselves facing, and the participant is asked to indicate the angle to the third object by drawing another line from the center of the circle. This test explicitly asks participants to imagine an egocentric perspective transformation.

To measure students' performance in mathematical tasks of Perspective Drawings, a test was designed fort he purposes of this study. It included four tasks: 1) state whether each object is in one or two point perspective, 2)sketch a cube in one point perspective, 3) sketsc a cube in two points perspective, 4) use your ruler to help you locate the vanishing point (points) for each figure. Participants were given 20 minutes to complete all tasks. This test was given to the students separately and approximately a week apart from the perspective-taking test. Each correct response to an item of each of the tasks were assigned a positive point. The total score fort his test was the sum of positive points. The maximum of points a student could achieve was 15 points.

Procedure

The new mathematics curriculum suggests that teachers should follow five steps during planning and implementing mathematics lessons. These steps are: (1) introduction, (2) observation/ investigation, (3) explanation, (4) progress and, (5) assessment (MEB, 2007). After the pre-tests were conducted on the control

group students, the lessons were designed using these five steps that were recommended, but the students were asked to produce Perspective Drawings in an activity-based way by using the board and paper in the classroom environment for two class-hours. Following the teacher's presentation of one-point and two-point Perspective Drawings on the board, students completed one-point and two-point Perspective Drawing activities using a pencil on paper. Some of the one-point and two-point Perspective Drawings performed by the test and control group students on dot paper were presented in Figure 3 and Figure 4.

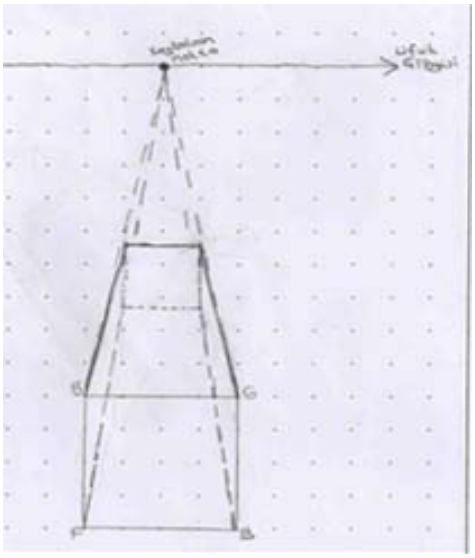

Figure 3. One point perspective drawing

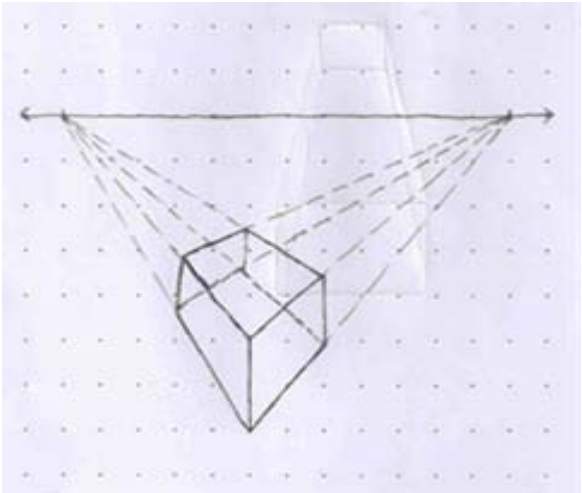

Figure 4. Two point perspective drawing

However, the experimental group students, in addition to what was performed with the control group students, were delivered activity sheets which described program menus and process steps so that they could use the program more conveniently following GSP orientation in the computer lab. Since there were 30 computers in the lab, each student had the opportunity to experience computer application separately. After the GSP orientation, the students were asked to produce one-point and two-point Perspective Drawings with GSP. Examples of the one-point and two-point perspectivity produced by students were represented respectively in Figure 5 and Figure 6.

Copyright © The Turkish Online Journal of Educational Technology

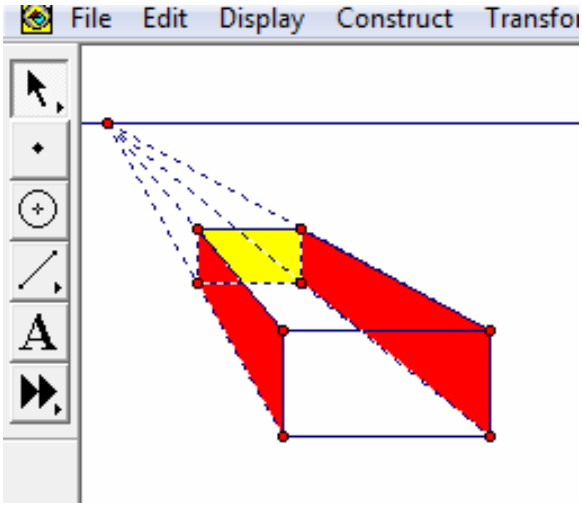

Figure 5: One point Perspective Drawing using GSP

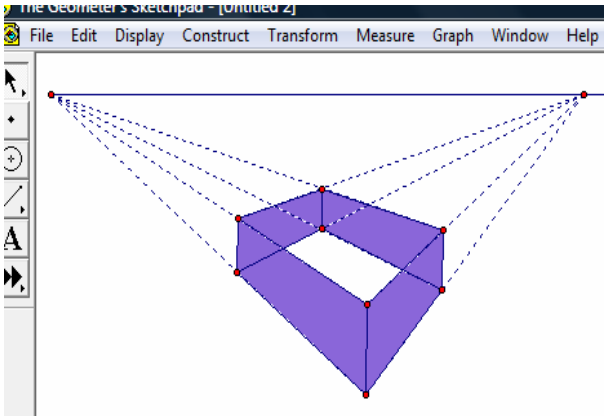

Figure 6: Two point Perspective Drawing using GSP

Students then animated and colored their drawings produced with GSP and added animations to their drawings. The test and control groups finally took the post-tests and the practical phase came to an end.

Data Analysis

Data obtained in the research were analyzed by means of SPSS program. Non-parametric tests, independent from normal distribution assumption and applicable in small populations, were used in order to examine the relations between the pre-test and post-test scores of the test and control groups (n=30). The Spatial Orientation pre-test/post-test scores of the test and control groups were analyzed conducting Wilcoxon Two-Related Samples Test. Then the post-test rank-scores received by the test and control groups in Spatial Orientation and perspectivity assessment questions were analyzed using Mann-Whitney U Test.

Findings

Table 3 and Table 4 represent the results from Wilcoxon Two-Related Samples Test carried out in order to determine whether there was a significant difference between the pre-test/post-test rank-scores of the experimental group and the control group for the Spatial Orientation test and Perspective Drawing test.

Tablo 3. The pre-test/post-test scores of the experimental group for the Spatial Orientation and Perspective Drawing tests.

Measurement tests		N	Mean	p-value
Spatial Orientation	Post-Pre tests	15	7,32	0,014
Perspective Drawing tests	After-Pre tests	15	8	0,001

It was determined as a result of the analysis that there was a significant difference between the pre-test/post-test rank-score means of the experimental group students for both the Spatial Orientation and Perspective Drawing

tests. It could therefore be suggested that producing Perspective Drawings with GSP increases students' achievement in Spatial Orientation and perspectivity. The increase in Spatial Orientation achievement could be attributed to the fact that students can come up with Perspective Drawings of any given object in a fixed position and, by means of this dynamism of GSP program, they can manipulate these drawings and see possible images to emerge with a perspective change by the person looking at the object.

Tablo 4. The pre-test/post-test scores of the control group for the Spatial Orientation and Perspective Drawing tests.

Measurement tests		N	Mean	p-value
Spatial Orientation	After-Pre tests	15	6,77	0,005
Perspective Drawing tests	After-Pre tests	15	8	0,001

The analysis found a significant difference between the pre-test/post-test rank-score means of the control group students for both the Spatial Orientation and Perspective Drawing tests. According to this finding, it could be suggested that Perspective Drawings presented to the control group students increase their achievement in Spatial Orientation. It also means that Perspective Drawings increase spatial orientation ability without computer aid, too. Then although Perspective Drawings are actually two-dimensional drawings of three-dimensional objects, students make use of Spatial Orientation while producing one-point and two-point Perspective Drawings. As a consequence, teaching this subject increases achievement in Perspective Drawing as well as Spatial Orientation ability.

The results from Mann Whitney U Test analysis, which was carried out in order to determine whether there was a significant difference between the Spatial Orientation and perspective questions post-test rank-scores of the experimental group students and the control group students, were represented in Table 5 and Table 6.

Tablo 5. The Spatial Orientation post-test scores of the experimental group and the control group

Measurement test	Groups	N	Mean	p-value
Spatial Orientation	Experimental Group	15	18,93	0,033
Spatial Orientation	Control Group	15	12,07	

The analysis identified a significant difference between the Spatial Orientation post-test rank-score means ($p < 0,05$). Based on this finding, it could be suggested that computer-aided Perspective Drawings presented to the test students increase achievement in Spatial Orientation more in comparison with the Perspective Drawings performed on the board and paper. The difference in Spatial Orientation achievement could be attributed to the fact that by means of the dynamism of GSP program, students can manipulate Perspective Drawings and see possible images to emerge with a perspective change by the person looking at the object.

Tablo 6. The Perspective Drawing tests post-test scores of the experimental group and the control group

Measurement test	Groups	N	Mean	p-value
Perspective Drawing tests	Experimental Group	15	19,73	0,008
Perspective Drawing tests	Control Group	15	11,27	

The analysis also found a significant difference between the Perspective Drawing post-test rank-score means ($p < 0,05$). This finding shows that computer-aided Perspective Drawings presented to the test students increase achievement in Perspective Drawing more in comparison with the Perspective Drawings performed on the board and paper. The difference in Perspective Drawing achievement could be attributed to the fact that students cannot see enough samples in planes like board or paper but they can examine both more samples and different positioning variations of drawings through added animations by means of GSP. By means of the dynamism of the program, the experimental group students can see the properties of the horizon line and vanishing points better than the group working on paper.

CONCLUSION AND DISCUSSION

Perspective drawings are used to illustrate the appearance of three-dimensional objects on paper. According to primary school mathematics curriculum, among basic perspective drawing skills, one-point perspective and two-point perspective drawings and concepts are supposed to be taught in 8th grade mathematics course. Teaching perspective drawing aims to have students understand the relationship between objects and space. In this study, perspective drawing tasks helped the students learn the concepts and techniques of perspective drawing and acquire drawing skills in both the experimental group and the control group. In addition, they improved the students' spatial orientation ability.

The research findings revealed that the Perspective Drawings produced with both computer-aided teaching method and the activities on paper increased 8th grade students' achievement in Spatial Orientation and Perspective Drawing. On the other hand, while there was no statistically significant difference between the pre-test rank-scores of the experimental group and the control group for Perspective Drawing, a statistically significant difference was identified between the post-test rank-scores. Then it could be concluded that when the students, who had met Perspective Drawing for the first time in Mathematics course in their school life, learnt techniques of these drawings, an increase was identified in the achievement level of both of the groups, but the experimental group students' achievement in Perspective Drawing increased a lot more due to the drawings produced with the dynamic computer program. Similarly, although there was no statistically significant difference between the pre-test scores of the experimental group and the control group for Spatial Orientation, a statistically significant difference was found between the post-test scores. In light of this finding, it could be recommended that computer-aided teaching should be applied in teaching Perspective Drawing in order to increase student achievement in Spatial Orientation and Perspective Drawing.

The complexity of steps and methods in the static perspective drawings performed on the board and paper led to a teaching and learning problem in the control group whereas the computer aided teaching program applied in the experimental group helped solve this problem. It was observed that in classes where one-point and two-point perspective drawings were performed, the students recalled the perspective process steps which they were taught in class before and easily accomplished the tasks by means of their teacher's guidance and the activity handouts. Also, it was determined that since the computer program made it possible to move and color the drawings as well as producing clearer drawings than board or paper plane, the students better understood the depth of the perspective drawings and the students found these lessons more enjoyable than those in traditional classroom environment. By providing the students with an opportunity to check and revise any stage of the students' perspective drawings, the dynamic computer program helped them to learn perspective drawing step by step.

The restrictions which are inherent in the current course materials inevitably bring about some teaching and learning problems in the control group. For example, the teacher often has to spend too much time on the board for drawings because of the multiplicity of consecutive lines and steps in completed drawings (see Figure 1 and Figure 2). However, students still have difficulty in determining what comes first and what comes next in sequential drawings. On the other hand, chalks in many different colors are needed in order to distinguish between perspective lines and construction lines and horizon lines because construction lines and horizon lines are used to complete perspective drawing. In addition, perspective drawing can be made larger than normal size for clarity. The larger the size of a drawing is, the more effort it requires. Also, removing errors requires greater effort. Nevertheless, perspective drawings can still seem so messy on the board or in students' notebooks even if errors are corrected. Such restrictions hinder the success of students' perspective drawings and improvement of spatial orientation achievement.

While computer environment promotes a practical and concrete approach, students' reasoning about the concepts which they study in this environment requires cognitive perception and interpretation. In general, the interaction between the physical actions which students perform by means of dynamism and the theoretical meanings of concepts is very important (Flanagan, 2001). In other words, although students seem to be exhibiting certain experimental skills in dynamic software environment, they get to understand the theoretical structure of concepts better as they are made to think about these actions (Faydacı, 2008). In this study, the students were able to manipulate the positions and values of the perspective drawing components in order to visualize the cube's change. The dynamic program also offers an automatic drawing function which saves time in sequential drawings. This means that the procedure's steps can be monitored separately or continuously. Students can follow the automatic drawing on computer screen step by step and perform their own drawing on paper. By means of this feature, the students in this study were able to perform perspective drawings easily by distinguishing between construction lines and horizon line and without forgetting any steps and lines. Making it possible to change any drawing component without a limit, this feature allows for producing new samples of a perspective drawing and leads to more efficient learning.

In this study, both the experimental and control group students performed one-point and two-point drawings of a fixed-positioned object. While the students in the control group produced new perspective drawings on paper by repeating the same steps over and over in order to observe the changes caused by a change in the viewer's perspective, the experimental group students were able to see the image changes caused by a change in the viewer's perspective on more samples by making manipulations on these drawings thanks to the dynamism of GSP. These activities can be regarded to have a positive influence on improving spatial orientation ability because spatial orientation is defined as one's ability to mentally visualize the new image of an object that

emerges as a result of change in the viewer's perspective. On the other hand, in comparison with the control group students, theexperimental group students' spatial orientation ability might have been improved more thanks to the preciseness of the drawings produced in computer and the presentation of a three-dimensional reality as a result of coloring and animation features. Also, the control group students had to produce new drawings in order to observe the changes caused by perspective changes for a model whereas the experimental groups students were able to move perspective drawings of an object easily as a whole body or part by part with GSP. This advantage could have added to the improvement of these students' spatial orientation ability.

Performing perspective drawings with tools such as paper and pen and improving spatial orientation ability have always been limited in traditional classroom environments in comparison with computer-aided teaching environments. There are always missing points in the pictorial representations of a three-dimensional object and this leads to optical illusions and different perceptions. Moreover, no matter how perfect these shapes are, it is impossible to see different perspective images of objects in a single drawing due to the static nature of this environment. Using dynamic geometry software together with static diagrams in lessons promotes primary school students' learning perspective drawings and improves their ability to mentally visualize and manipulate three-dimensional objects. While dragging objects, students both change some of their properties and discover their unchanging relationships through observation. This discovery provides students with an opportunity to make assumptions. Then they support their assumptions with many examples and therefore become involved in a sense of discovery learning.

In primary schools, perspective drawing achievement and spatial ability can be improved by increasing the number of computer-aided activities that are designed to supplement perspective drawings and monitor the perspective changes in perspective drawings after teaching the concepts and methods of one-point perspective drawing and two-point perspective drawing in traditional classroom environment. Considering the fact that Perspective Drawings produced by the control and experimental group students by means of the computer program increase their Spatial Orientation ability, designing new Perspective Drawing activities aimed at improving other components of spatial ability seems to be a good idea. An additional recommendation could be making use of the computer program in Perspective Drawings because, in comparison with the dynamic computer software, in drawings on the board or paper plane students cannot efficiently recognize the vanishing points or the changes occurring due to the movement of object components. Since manipulation, coloring and animations are possible with the drawings produced by using GSP; it could be used in presenting primary school geometry subjects.

REFERENCES

Baki, A., Kösa, T.& Karakuş, F. (2008). *Using dynamic geometry software to teach solid geometry:Teachers' views*. Proceedings of 8th International Educational Technology Conference, 82-86.

Bintaş, J. & Aklı, B. (2008). *Bilgisayar Destekli Geometri : Geometer's Sketchpad Kullanımı ve Geometri Uygulamaları*. Öğreti yayınları.

Boyraz, Ş. (2008). *The effects of computer based instruction on seventh grade students' spatial ability, attitudes toward geometry, mathematics and technology*. Unpublished Master Thesis, Middle *East* Technical University

Clements, D. H. (1999). *Geometric and Spatial Thinking in Young Children. . In J. V. Copley (Ed.), Mathematics in the early years* (66–79). Reston, VA: National Council of Teachers of Mathematics.

Faydacı, S. (2008). *İlköğretim 6. Sınıf Öğrencilerine Geometrik Dönüşümlerden Öteleme Kavramının Bilgisayar Destekli Ortamda Öğretiminin İncelenmesi*. Yayınlanmamış Yüksek Lisans Tezi, Gazi Üniversitesi Eğitim Bilimleri Enstitüsü.

Flanagan, K. (2001). *High School Students' Understandings of Geometric Transformations in the Context of a Technological Environment*. Unpublished doctoral dissertation, Pennsylvania State University.

Gibson, R. (2002). *The influence of Spatial Orientation on Student Performance*. Proceedings of the 15th Annual Conference of the National Conference on Computing Qualifications, 473-474.

Gibson, R. & Williams, J. (2003). *The influence of Spatial Orientation on student performance: a methodology.* Proceedings of the 16th Annual Conference of the National Certificate on Computing Qualifications, 273-277.

July, R.A. (2001). *Thinking in three dimensions: Exploring students' geometric thinking and spatial ability with the Geometer's Sketchpad.* Unpublished doctoral dissertation, Florida International University.

Karataş, İ. & Güven, B. (2008). *Bilgisayar donanımlı ortamlarda matematik öğrenme: Öğretmen adaylarının kazanımları*. Proceedings of 8th International Educational Technology Conference, 529-534.

Kozhevnikov, M. & Hegarty, M. (2001). A dissociation between object-manipulation spatial ability and Spatial Orientation ability. *Memory and Cognition, 29*, 745–756.

McGee, M. G. (1979). Human spatial abilities: Psychometric studies and environmental, genetic, hormonal, and

neurological influences. *Psychological Bulletin* 86(5), 889-918.

MEB (Milli Eğitim Bakanlığı, Ministry of National Education), (2007). *İlköğretim Matematik Dersi Öğretim Programı ve Kılavuzu (Primary Mathematics Curriculum).* Retrieved March 21, 2008, from http://ttkb.meb.gov.tr

Onat, E., (1975*). Perspektiv ve perspektivde gölge çizimi.* Güven Kitabevi Yayınları.

Strong, S., & Smith, R. (2002). Spatial visualization: Fundamentals and trends in engineering graphics. *Journal of Industrial Technology*, 18, 1–6.

TTKB (Turkish Board of Education), (2008). *Teaching Syllabus and Curriculum Guidebook for Elementary School Mathematics Course: Grades 6 to 8.* Ankara, Turkey.

Copyright © The Turkish Online Journal of Educational Technology