AN APPLICATION OF LATENT VARIABLE STRUCTURAL EQUATION MODELING FOR EXPERIMENTAL RESEARCH IN EDUCATIONAL TECHNOLOGY

Hyeon Woo LEE
Sangmyung University, Korea
hwl@smu.ac.kr

ABSTRACT
As the technology-enriched learning environments and theoretical constructs involved in instructional design become more sophisticated and complex, a need arises for equally sophisticated analytic methods to research these environments, theories, and models. Thus, this paper illustrates a comprehensive approach for analyzing data arising from experimental studies using structural equation modeling (SEM) procedures that can formulate and test theories regarding how interventions affect observed outcomes, in comparison to traditional MANCOVA design. Researchers in the field of instructional systems and educational technology are encouraged to incorporate this method into their analyses of experimental investigations, because this method allows for a close examination of mediating processes that are responsible for the outcomes observed and for the estimation of both random and correlated measurement errors.
Keywords: Structural Equation Modeling, Experimental Research, Generative Learning, Latent Variable

INTRODUCTION

Conventionally, studies related to educational technology have used statistical techniques to test mean differences between groups. The t-test, analysis of variance (ANOVA), and analysis of covariance (ANCOVA) allow researcher to determine the effects of interventions. However, cognitive functioning and processes related to learning are intricate and human learning involves various psychological constructs. In other words, theoretical advances for understanding human cognition and learning processes require the consideration of more psychological constructs when designing learning environments.

Moreover, with technological advances, educators infuse more technologies into learning environments to improve students' learning. However, the effectiveness of these innovations cannot simply explained by testing mean differences, because these interventions could be related to underlying mediating processes that might be responsible for the desired outcomes (Koetting & Malisa, 2004, Delialioglu, et al., 2010). Thus, researchers in the field of educational technology should be more interested in explaining how interventions affect learning (Alenezi, Abdul Karim, &Veloo, 2010, Yukelturk, 2010).

The traditional approach has been successful in finding the effectiveness of interventions, but not in understanding the intervening psychological constructs that might influence how an intervention affects learners' achievement. Accordingly, the need arises for a more comprehensive approach that can formulate and test those complex mechanisms. In this paper, structural equation modeling is presented as a possible method. Although structural equation modeling has been used extensively in recent studies, most of the studies have used the method in non-experimental survey contexts. One reason could be that the procedures are relatively new and not easy to deploy in comparison to traditional methods such as ANOVA and MANOVA. For the same reason, there is no clear rationale for preferring structural equation modeling to traditional analyses of experimental data.

Thus, the purpose of this paper is to demonstrate a comprehensive approach to analyzing data from experimental studies using latent variable structural equation modeling that can formulate and test theories regarding how interventions affect observed outcomes (Bollen, 1989; Kline, 2005). To illustrate this statistical approach, this paper analyzes data drawn from an actual experimental study.

The Experimental Context

To demonstrate the use of structural equation modeling for MANCOVA designs, this paper applies the procedures to data derived from an actual experiment that examined the effects of generative learning strategy prompts and metacognitive feedback on learners' self-regulation, use of learning strategies, and learning performance (Lee, Lim, & Grabowski, 2010). In that experiment, the researchers wanted to create experimental conditions where interventions would influence students' learning performance directly and indirectly. The prediction was that the interventions would positively affect learning performance, but through their effect on self-regulation and use of learning strategies.

In the study, 223 participants were randomly assigned to one of the three treatment groups. One group was given only generative learning strategy tools as the control (T1); the second group was given additional generative

Copyright © The Turkish Online Journal of Educational Technology

learning strategy prompts (T2); and the third group was given additional generative learning strategy prompts and metacognitive feedbacks (T3). The participants took an online pre-test and were instructed to download the instructional material and study it. Afterwards, the participants completed a survey about their self-regulation while they were studying and took post-tests to explore two criteria: their recall and comprehension of the instructional material. The instructional materials that learners used during the experiment were collected and assessed to measure the quality of the learner's overt use of generative learning strategies.

In this experimental condition, researchers want to know whether the three groups differed significantly with respect to four dependent variables - learner's self-regulation, quality of overt use of generative learning strategies, recall, and comprehension - when controlling learners' prior knowledge. This question could be answered with a MANCOVA analysis. However, as instructional designers, we might be more interested in the mechanism among the four dependent variables. That is, researchers could hypothesize that metacognitive feedback would improve learners' self-regulation and use of generative learning strategies, which in turn improve learners' recall and comprehension. This mediational hypothesis could be tested by using latent variable structural equation modeling (hereafter SEM), but cannot be tested using traditional MANCOVA analysis.

MODELING

In applying structural equation modeling, researchers usually follow five basic steps of SEM recommended by Kline (2005): (1) Model Specification; (2) Model Identification; (3) Data Preparation and Screening; (4) Estimation of the Model; and (5) Model Re-specification, if necessary. Since the primary purpose of this paper is to demonstrate analyzing data from experimental studies with SEM, the general data analysis procedure of SEM is beyond the scope of this paper. Thus, the following sections present modeling one-way MANCOVA with a latent variable structural model, and alternative modeling to test mediating effects.

Modeling One-Way MANCOVA with a Latent Variable Structural Model

In general, researchers use MANOVA to test the mean differences across two or more groups on two or more dependent variables simultaneously. By using MANOVA, researchers control the overall alpha level, test mean differences while controlling independencies of dependent variables, and count the relationships among the dependent variables (Bray & Maxwell, 1985). These MANOVA designs can be accomplished by structural equation modeling using a Multiple Indicators and Multiple Causes (MIMIC) model. This SEM approach, in which factors are regressed on one or more dichotomous cause indicators that represent group membership (i.e. coded 0 = control, and 1 = treatment), allowed testing for multiple group differences on latent variables (Kaplan, 2000), which is analogous to interconnected dummy variable regressions.

As the one-way MANCOVA design shows, effects of treatments - generative learning strategy prompts and generative learning strategy prompts with metacognitive feedback - were tested after controlling for learner's prior knowledge. Figure 1 presents the model used to examine the case with four latent dependent variables, three groups, and one covariate, adopting Kühnel's (1988) one-way MANOVA design and applying the LISREL notation (Jöreskog & Shörbom, 1984).

Copyright © The Turkish Online Journal of Educational Technology

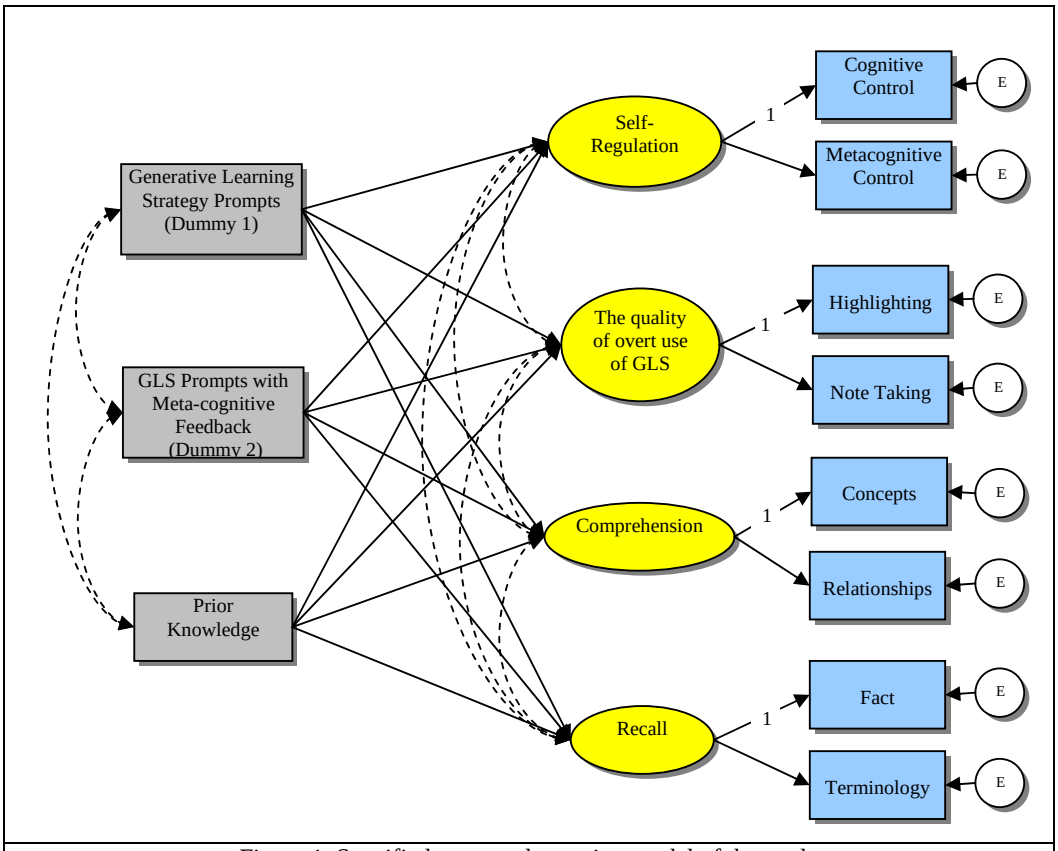

Figure 1. Specified structural equation model of the study

The two causal indicators in the structural model of Figure 1 are two dichotomies using the *group code* (*dummy code*) approach (Aiken, Stein, & Bentler, 1994). One dummy variable, Dummy 1 (g1), was coded as 1 = generative learning strategy prompts group (T2), or 0 = control group (T1) or the generative learning strategy prompts with metacognitive feedback group (T3). This dummy variable, g1, represents the comparison between the generative learning strategy prompts group (T2) and the control group (T1). Another dummy variable, Dummy 2 (g2), was coded as 1 = generative learning strategy prompts with metacognitive feedback group (T3), or 0 = control group (T1) or the generative learning strategy prompts group (T2). This dummy variable, g2, represents the comparison between the generative learning strategy prompts with metacognitive feedback group (T3) and the control group (T1). Table 1 shows this dummy code system.

Table 1. Dummy codes for the MIMIC model

Group	Dummy 1 (g1)	Dummy 2 (g2)
Control group (T1)	0	0
Generative learning strategy prompts group (T2)	1	0
Generative learning strategy prompts with metacognitive feedback group (T3)	0	1

In order to analyze the means of observed dependent variables as a function of the categorical independent variables, a pseudo-variable (i.e. "CONST") was added to the sample moment matrix as another variable, having 1 in the diagonal and the means of all other variables as off-diagonal elements constant ("CONST"). The initial structural model analyzed the means of the observed dependent variables as a function of the categorical independent variables (Bagozzi & Yi, 1989). By doing this (see Figure 2), the first set of regression coefficients, $\gamma^*_{11}, \gamma^*_{12}, \gamma^*_{13}$ and γ^*_{14}, were the differences in the means of four dependent latent variables between the generative learning strategy prompts group and the control group. In the same way, the second set of regression coefficients, $\gamma^*_{21}, \gamma^*_{22}, \gamma^*_{23}$ and γ^*_{24}, were the difference in the means of the four dependent latent variables between the generative learning strategy prompts with metacognitive feedback group and the control group.

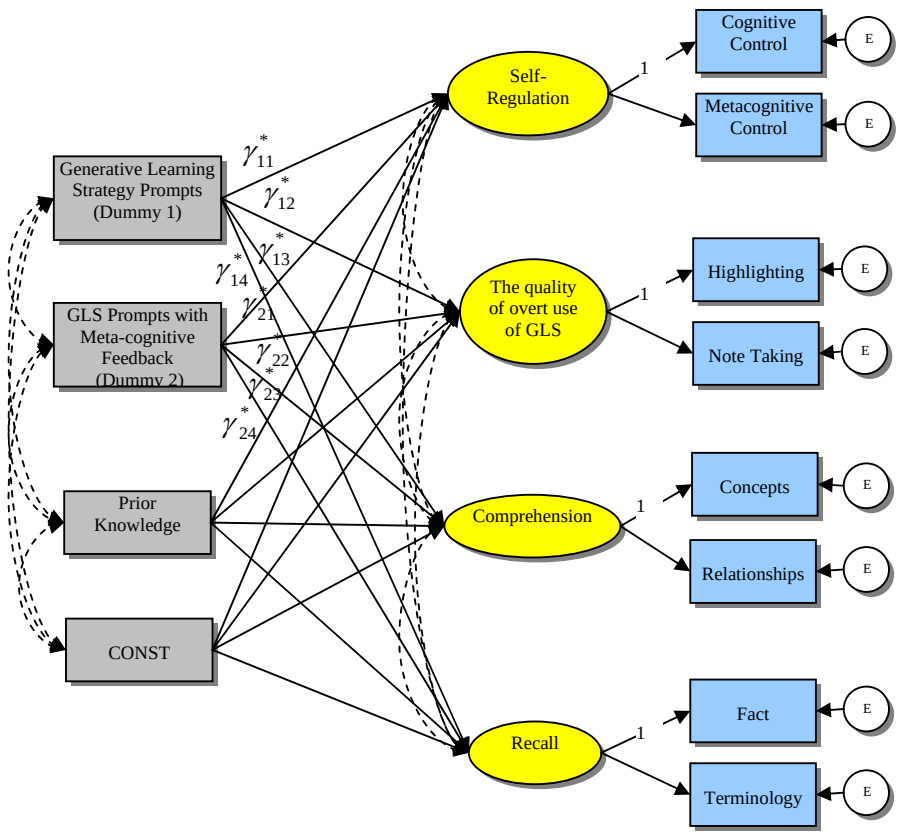

Note. CONST = Pseudo-variable for Mean Structure.

Figure 2. Structural equation model specification of one-way MANCOVA with four latent dependent variables of multiple measures, three groups, and a covariate

Thus, an examination of the paths from the dummy exogenous variables to the dependent latent variables enabled testing of the multivariate null hypothesis: equality in means of the dependent variables across groups. This is analogous to the omnibus test commonly used in traditional MANCOVA analyses (e.g., the Pillai's Λ or Wilks' Λ). That is, if all regression coefficients from the dummy variables equal 0, then the null hypothesis - the means of dependent latent variables are equal across groups - is retained. In order to test the null hypothesis of equal means across groups, a chi-square difference test between a full model and the other restricted model (i.e., $\gamma^*_{11} =, \gamma^*_{12} =, \gamma^*_{13} =$ and $\gamma^*_{14} = 0$ and $\gamma^*_{21} =, \gamma^*_{22} =, \gamma^*_{23} =$, and $\gamma^*_{24} = 0$) can be conducted (Kaplan, 2000).

As an illustration, the chi-square statistics of the full model, allowing for the difference in means as specified in Figure 2, and the restricted model, constraining the mean difference parameters to zero, appear in Table 2. The Satorra-Bentler scaled chi-square difference test (chi-square (8) = 164.00; p < .001) suggests rejecting the null hypothesis of equal means, as predicted. That is, generative learning strategy prompts and metacognitive feedback significantly affected learners' self-regulation, use of learning strategies, and learning performance in one or more instances.

Table 2. Chi-square statistics of the structural model for one-way MANCOVA

	χ^2_{NT}	*p*-value	χ^2_{SB}	*p*-value	*df*
Full model	78.10	0.00	78.26	0.00	30
Restricted model	220.77	0.00	227.36	0.00	38

Note. χ^2_{NT}: Normal theory weighted least squares chi-square
χ^2_{SB}: Satorra-Bentler scaled chi-square

After rejecting the null hypothesis, a significant test of each regression coefficient linking the dummy variables to the dependent latent variables allows researchers to examine which group affected which criteria. This test is analogous to the univariate ANOVA analysis of the dependent variables, but holds other variables in the model constant. To examine the univariate effect of the treatments, the regression coefficients from the dummy variables to the latent variables were inspected. Table 3 presents the unstandardized regression coefficient, standard error, and t-value.

Table 3. Path coefficients, standard error, and t-value of treatments

Latent variable	Dummy 1 (g1): Control vs. generative learning strategy (GLS) prompts group		Dummy 2 (g2): Control vs. GLS prompts with metacognitive feedback group	
	Path coefficient	t-value	Path coefficient	t-value
Self-regulation	.12 (.14)	.87	.25 (.019)	1.97*
The quality of overt use of GLS	20.69 (1.40)	14.83*	23.15 (1.35)	17.09*
Recall	0.48 (.37)	1.31	1.14 (.37)	3.03*
Comprehension	0.66 (.38)	1.76	1.42 (.40)	3.52*

Note. Standard errors are in parenthesis
*: $p < .05$

According to the previous results, five significant paths were identified, linking treatments to four dependent variables, including from Dummy 1 (g1) to USE and from Dummy 2 (g2) to four dependent variables (see Figure 2). Conversely, three paths, linking Dummy 1 to self-regulation, recall, and comprehension, were not significant. Thus, these insignificant paths were removed and the modified structural model was estimated with only statistically significant paths, as recommended by Kline (2005) and Kaplan (2000) (see Figure 3). The modified model obtained a significant chi-square (χ2SB=82.17; df =33; p < .000), the CFI = .95, the RMSEA = .082, and the SRMR = .016. Although the chi-square was significant and RMSEA was slightly greater than the criteria (.06), other fit indices satisfied the criteria, suggesting acceptable model fit.

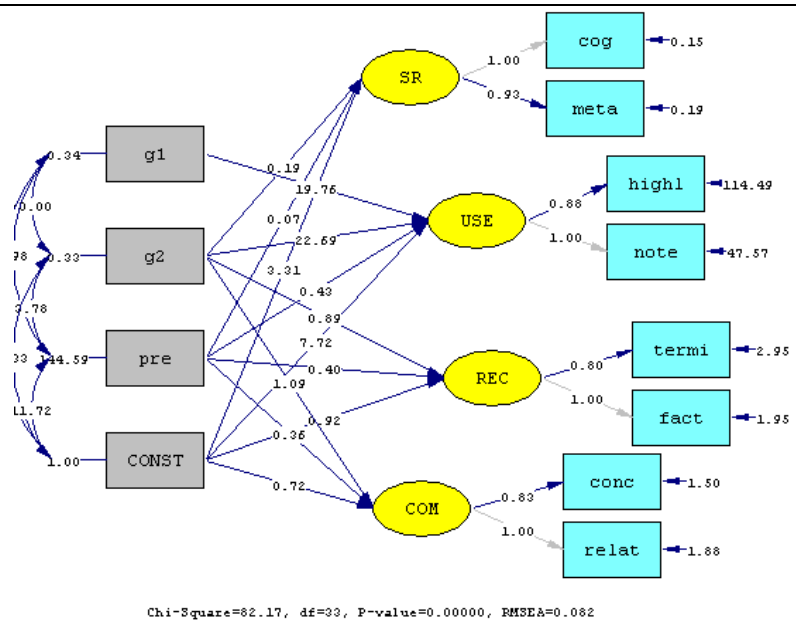

Note. g1: dummy code for T2 group, g2: dummy code for T3 group, pre: prior knowledge,
SR: self-regulation, cog: cognitive control, meta: metacognitive control,
USE: the quality of overt use of generative learning strategies, highl: highlighting, note: note taking,
REC: recall, fact: fact, termi: terminology,
COM: comprehension, conc: concept, relat: relationship

Figure 3. Structural model with significant paths

Alternative Model to Test Mediating Effects

After researchers confirm that groups differ on variables, they may want to know if those differences are directly affected by the interventions, or indirectly as a result of a causal ordering among variables. For example, the second research question of the study examined whether or not variation in learners' performance in recall and comprehension was due to a direct association with the treatments, its dependence on learners' self-regulation, or overt use of generative learning strategies. Thus, three paths, linking self-regulation to learners' use of generative learning strategies and learners' use of generative learning strategies to recall and comprehension, replaced the error covariance among them, as hypothesized (see Figure 4).

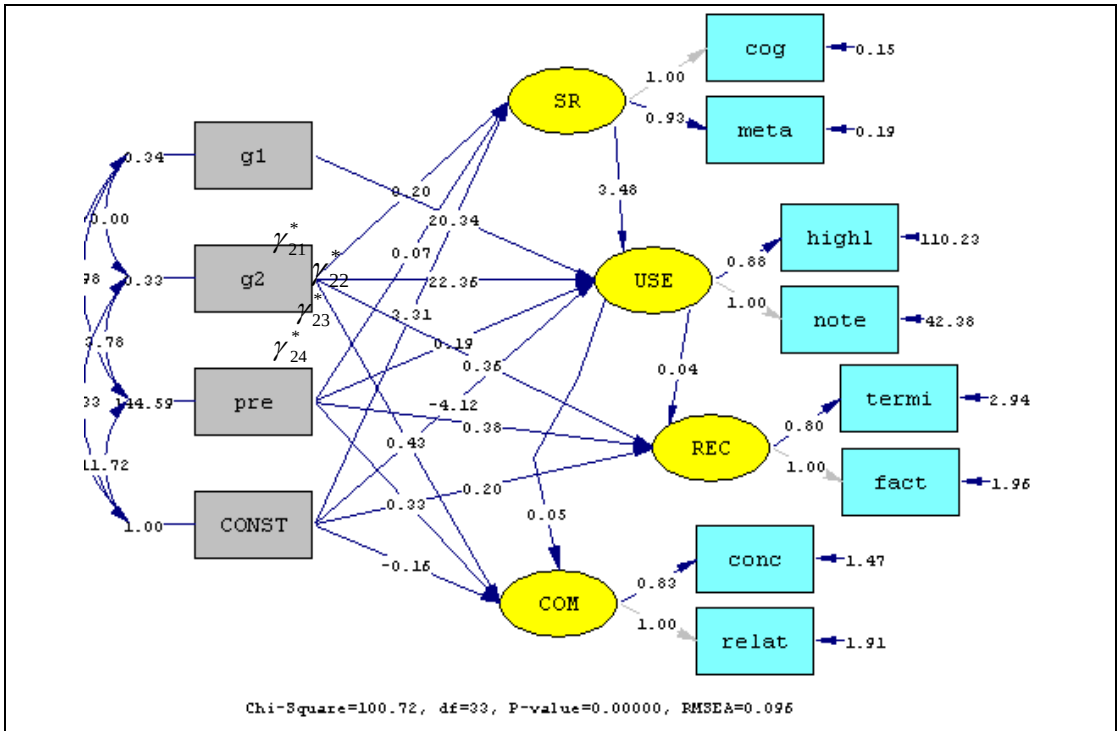

Figure 4. Structural equation model with hypothesized causal paths

To test the mediational hypothesis, the scaled chi-square difference between the model (see Figure 3), which includes the direct effects of generative learning strategy prompts with metacognitive feedback (g2) on recall and comprehension and the model which does not include these direct paths (i.e., $\gamma^*_{23} = \gamma^*_{24} = 0$), was tested. The chi-square statistics of these two models appear in Table 4.

Table 4. Chi-square statistics of the structural model with causal paths

	χ^2_{NT}	*p*-value	χ^2_{SB}	*p*-value	*df*
Full model (Model 5)	101.72	0.00	100.72	0.00	33
Model with $\gamma^*_{23} = \gamma^*_{24} = 0$	102.69	0.00	101.62	0.00	35

Note. χ^2_{NT}: Normal theory weighted least squares chi-square
χ^2_{SB}: Satorra-Bentler scaled chi-square

The Satorra-Bentler scaled chi-square difference test (chi-square (2) = .95, p > .05) suggests that retaining the null hypothesis of the direct effects of generative learning strategy prompts metacognitive feedback on recall and comprehension, thus supporting the indirect effects of self-regulation and learners' use of generative learning strategies. That is, the improvement of learners, who received generative learning strategy prompts with metacogntive feedback over the control group learners on recall and comprehension, can be explained with the improvement of the quality of their overt use of generative learning strategies. Also, self-regulation had significant, indirect effects on recall and comprehension through the quality of overt use of generative learning

strategies, supporting the mediation effect of learners' self-regulation and their use of generative learning strategies. The final structural equation model of the study is shown in Figure 5.

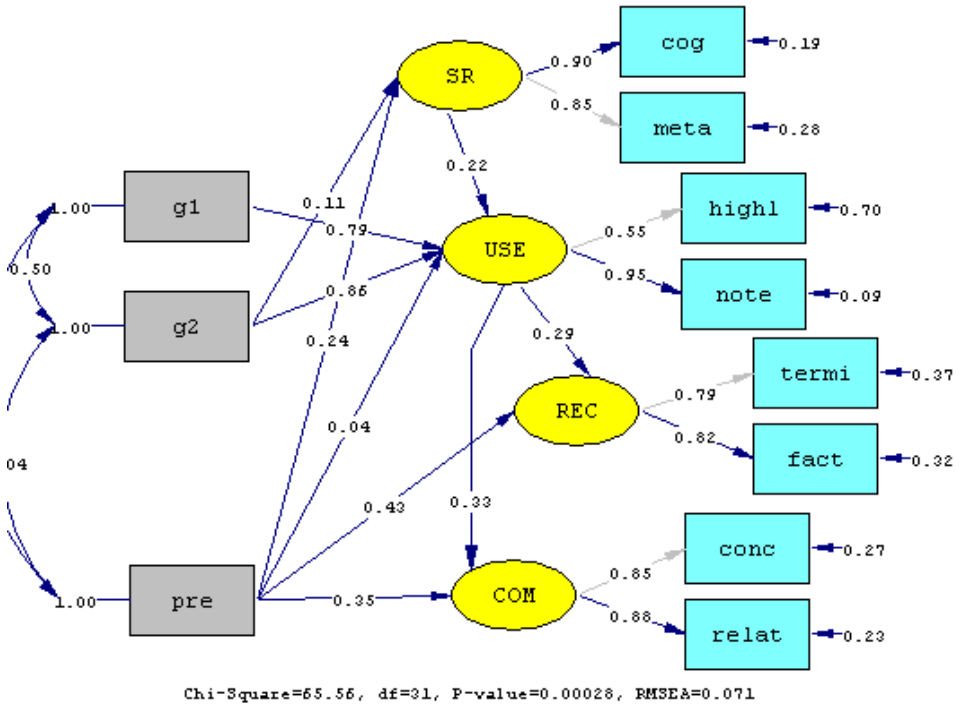

Note. g1: dummy code for T2 group, g2: dummy code for T3 group, pre: prior knowledge,
SR: self-regulation, cog: cognitive control, meta: metacognitive control,
USE: the quality of overt use of generative learning strategies, highl: highlighting, note: note taking,
REC: recall, fact: fact, termi: terminology,
COM: comprehension, conc: concept, relat: relationship
Note. the disturbances between SR and REC, SR and COM, and REC and COM are correlated

Figure 5. Final structural equation model

DISCUSSION

The major goal of instructional systems or educational technology is to design learning environments, providing meaningful instructional interventions to help learners. Accordingly, examining the effectiveness of the instructional interventions is a prime concern of the research in this field (Koetting & Malisa, 2004). Conventionally, studies have used statistical techniques to test mean differences between groups, such as the t-test, analysis of variance (ANOVA), and analysis of covariance (ANCOVA), to determine the effects of interventions. However, as current technology-enriched learning environments and theoretical constructs involved in instructional design and development become more sophisticated and more complex, a need arises for equally sophisticated analytic methods to research these environments, theories, and models. This paper demonstrated a comprehensive statistical analysis, structural equation modeling (SEM), which is a methodology that combines factor analysis and path analysis (Bollen, 1989; Kline, 2005; Russell, Kahn, & Altmaier, 1998). This SEM approach can be used to answer the research questions, exploring how interventions affect learning and examining the indirect effect of related psychological constructs.

Although educational studies have used this SEM approach extensively, the majority has used this method for analyzing non-experimental survey data. The advantages of using SEM with experimental data over traditional MANOVA/MANCOVA analyses are: 1) estimating and removing both random and correlated measurement errors; and 2) examining mediating processes (Bagozzi & Yi, 1989; Kahn & Altmaier, 1998). First, the traditional MANOVA/MANCOVA analysis assumes that dependent variables have no measurement errors. Ignoring the measurement errors of dependent variables increases the chances of making Type II errors, whereas SEM uses latent variables, which allows estimation and corrects the measurement errors. As a result, the latent variable SEM approach estimates the experimental intervention effects more accurately than traditional methods (Kahn & Altmaier, 1998). Second, as this study formulated, SEM can test factors that hypothesize the mediation

treatment effects on the dependent variables. This allows the uncovering of underlying processes of treatment influences. Obviously, the traditional approach has been successful in finding the effectiveness of interventions, but not in understanding how the interventions are effective. Analyses of the processes underlying a treatment might allow researchers to design more effective instructional treatments by refining the treatments to focus on processes that are positively related to treatment outcome (Kahn & Altmaier, 1998).

However, two important issues need to be addressed before applying this alternative procedure. First, a path analysis in SEM involves the estimation of causal relations among variables with correlational data. However, correlation does not imply causation, thereby not enabling statistical causal modeling to prove causation either. Inferring causation from correlation requires a solid theoretical base and careful specification of variables and predictive directions. For example, this study hypothesized that learners' self-regulation would cause improved overt use of generative learning strategies with theoretical basis; the final model (see Figure 4) supported this hypothesis. However, an alternative hypothesis that predicts effects from the opposite direction (i.e. from learners' overt use of generative learning strategies to learners' self-regulation) is a possible equivalent model. This alternative model obtained worse model fit indices (χ^2_{SB}=72.06; *df* =31; p=.000; CFI = .97; RMSEA =.077; and SRMR =.043) than the final model. Thus, the direction from learners' self-regulation to learners' overt use of generative learning strategies was supported by the model, but caution is still advised; SEM itself does not prove any causal relationships.

Second, an SEM analysis with latent variables needs more than 200 cases to produce accurate estimates (Kline, 2005). Also, researchers should consider the number of parameters being estimated as well as sample size. Bentler and Chou (1988) suggested that the ratio of participants to parameters should be at least 5:1 for appropriate estimation. Obtaining the appropriate number of research participants can often be challenging for educational researchers.

Cognitive functioning and processes related to learning are intricate and human learning involves various psychological constructs. Theoretical advances for understanding human cognition and learning processes require the consideration of more psychological constructs when designing learning environments. In addition, technological advances allows educators to infuse more technologies into learning environments, but testing mean differences cannot explain the effectiveness of these innovations; underlying mediating processes are more responsible for the desired outcomes.

Therefore, researchers in the field of instructional systems and educational technology are encouraged to assess learners' interaction with instructional interventions in technology-enriched environments. Current technologies permit developing user-oriented Web instructions that allow users to manipulate Web pages and record all learners' activities during their interactions, such as times of visits and revisions of notes. In this way, future investigations might reveal how learners interact with instructional interventions and how these interactions affect their learning. Thus, incorporating structural equation modeling for the analyses of experimental investigation is recommended. This method informs instructional designers about the direct and indirect effects of instructional interventions, and how intervening psychological constructs affect learning, rather than focusing only on the direct effects. Accordingly, this method enables instructional designers to identify problems in the treatment mechanisms and implement appropriate treatment.

CONCLUSION

The latent variable structural equation modeling approach has a major advantage over traditional analyses in that the comprehensive approach allows for a close examination of the mediating processes responsible for the observed outcomes. The traditional approach has been successful in finding the effectiveness of interventions, but not in understanding why the interventions were successful. Analyses of the processes underlying an intervention may allow researchers to design more effective instructional treatments by refining the intervention to focus on processes that are positively related to treatment outcome.

In addition, the SEM approach using latent variable modeling procedures allows for the estimation of both random and correlated measurement errors. As a result, the SEM approach provides more accurate estimates of the effects of experimental interventions than traditional approaches that ignore measurement errors of dependent variables that increase the chance of making Type II errors. Even though this alternative approach requires a larger sample size than the traditional approach, researchers in the field of educational technology are encouraged to incorporate this method into their analyses of experimental investigation, since this method allows them to analyze more sophisticated and advanced future learning environments.

Copyright © The Turkish Online Journal of Educational Technology

REFERENCES

Aiken, L. S., Stein, J. A., & Bentler, P. M. (1994). Structural equation analysis of clinical subpopulation differences and comparative treatment groups: Characterizing the daily lives of drug addicts. *Journal of Consulting and Clinical Psychology, 62*, 488-499.

Alenezi, A. R., Abdul Karim, A. M., & Veloo, A. (2010). An Expirical investigation into the role of enjoyment, computer anxiety, computer self-efficacy and internet experience in influencing the students' intention to use e-learning: A case study from Saudi Arabian Governmental Universities. *The Turkish Online Journal of Educational Technology, 9(4)*, 22-34

Bagozzi, R. P., & Yi, Y. (1989). On the use of structural equation models in experimental designs. *Journal of Marketing Research, 26*, 271-284.

Bentler, P. M., & Chou, C. (1988). Practical issues in structural modeling. In J. S. Long (Ed.), *Common problems/proper solutions: Avoiding error in quantitative research* (pp. 161-192). Newbury Park, CA: Sage.

Bollen, K. A. (1989). *Structural equations with latent variables.* New York: Wiley.

Bray, J. H., & Maxwell, S. E. (1985). *Multivariate analysis of variance*. Beverly Hills: Sage Publications.

Byrne, B. M. (2006). *Structural equation modeling with eqs: Basic concepts, applications, and programming* (2nd ed.). Mahwah, N.J.: Lawrence Erlbaum Associates.

Delialioglu, O., Cakir, H., Bichelmeyer, B. A., Dennis, A. R., & Duffy, T. M. (2010). Factors Impacting adult learner achievement in a tehcnology certificate program on computer networks. *The Turkish Online Journal of Educational Technology, 9(2)*, 97-107.

Jöreskog, K. G., & Shörbom, D. (1984). *Lisrel vi: Analysis of linear structural relationships by maximum liklihood, instrumental variables, and least squares methods* (3rd ed.). Mooresville, Ind.: Scientific Software.

Kahn, J. H., & Altmaier, E. M. (1998). Analyzing data from experimental studies: A latent variable structural equation modeling approach. *Journal of Counseling Psychology, 45*(1), 18-29.

Kaplan, D. (2000). *Structural equation modeling: Foundations and extensions*. Thousand Oaks, Calif.: Sage Publications.

Kline, R. B. (2005). *Principles and practice of structural equation modeling* (2nd ed.). New York: Guilford Press.

Koetting, J. R., & Malisa, M. (2004). Philosophy, research, and education. In D. H. Jonassen (Ed.), *Handbook of research in educational communications and technology* (2nd ed., pp. 1009-1020). Mahwah, NJ: Lawrence Erlbaum Associates.

Kühnel, S. M. (1988). Testing manova designs with lisrel. *Sociological Methods & Research, 16*(4), 504 - 523.

Lee, H. W., Lim, K. Y., & Grabowski, B. L. (2008). Generative learning: Principles and implications for making meaning. In M. J. Spector, D. M. Merrill, J. van Merrienboer & M. P. Driscoll (Eds.), *Handbook of research and educational communications and technology* (3rd ed.). New York, NY: Taylor & Francis Group.

Lee, H. W., Lim, K. Y., & Grabowski, B. L. (2010). Improving self-regulation, learning strategy use, and achievement with metacognitive feedback. *Educational Technology Research and Development, 58(6)*, 629-648.

Russell, D. W., Kahn, J. H., & Altmaier, E. M. (1998). Analyzing data from experimental studies: A latent variable structural equation modeling approach. *Journal of Counseling Psychology, 45*(1), 18-29.

Yukelturk, E. (2010). An investigation of factors affecting student participation level in an online discussion forum. *The Turkish Online Journal of Educational Technology, 9(2)*, 24-32

Copyright © The Turkish Online Journal of Educational Technology