International Journal of Progressive Education, Volume 16 Number 6, 2020
© 2020 INASED

Use of Smartphones in Class: Examining the Relationship Between M-Learning Readiness, Cyberloafing, Nomophobia and Addiction Variables

Ali İbrahim Can Gözüm [i]
Kafkas University

Raziye Erkul [ii]
Kafkas University

Nur Aksoy [iii]
Kafkas University

Abstract

The aim of this study is to examine the relationship between pre-service preschool teachers' mobile-learning (m-learning) readiness, cyberloafing, nomophobiaand smartphone addiction variables. The study was carried out using 306 pre-service preschool teachers undergoing education at state-run universities in two different cities in Turkey. The most critical conclusion of the study is that the smartphones used by pre-service preschool teachers both for m-learning and for cyberloafing in class have an impact on nomophobia and smartphone addiction. In the study, the effects of smartphone usage on both the learning environment and the individual were discussed in accordance with the proposed model. Suggestions for the use of smartphones were made in line with the study's conclusions.

Keywords: M-Learning Readiness, Smartphone Cyberloafing, Smartphone Nomophobia, Smartphone Addiction, Pre-service Preschool Teachers

DOI: 10.29329/ijpe.2020.280.6

---
[i] **Ali İbrahim Can Gözüm,** Assist. Prof. Dr., Early Childhood Education Department, Kafkas University, ORCID: 0000-0002-7765-4403

Correspondence: a_ibrahimcan@hotmail.com

[ii] **Raziye Erkul,** Research Assist, Early Childhood Education Department, Kafkas University, ORCID: 0000-0003-3072-2103
[iii] **Nur Aksoy,** Research Assist, Early Childhood Education Department, Kafkas University, ORCID: 0000-0002-8693-0588

INTRODUCTION

The Internet today is a communication network that connects people in different environments. Access to the Internet, which is the most important mass communication tool of the 21st century, is easily provided in higher education classes. It is a feature of the nature of education that educators want to benefit from the positive effects of using online technology in the classroom (Baker et al., 2012). In this context, mobile phones that provide online access to the Internet have become m-learning tools used in educational environments (Kukulska Hulme, 2005).

Pre-service teachers can use their smartphones as m-learning tools to make audio or video recordings of their lessons, to browse websites relating to preschool education, or for access to examine activities prepared for children and to use learning materials more effectively (Akkoyunlu, 2018; Nakamura et al., 2015). Smartphones have a critical effect on pre-service teachers' teaching methods and strategies, being used as educational material and for obtaining information and learning about their lessons (Almunawar et al., 2015; Dukic et al., 2015). Therefore, it is important that pre-service teachers use smartphones in their fields of education as a m-learning tool (Abachi & Muhammad, 2014).

M-learning eliminates time and space constraints in the individual's learning process (O'Malley et al., 2005; Geddes, 2004). M-learning is not limited only to supporting learning by accessing information (Pachler et al., 2010). As a result of m-learning, the individual discovers their learning style (Shih et al., 2010); furthermore, their attitudes toward learning and their academic success improve (Chen, 2013; Cheon et al., 2012; Ciampa, 2014; Jaradat, 2014; Martin & Ertzberger, 2013) and their interest in and motivation for learning increase as well (Hwang & Chang, 2011). Just as there are advantages to m-learning, there are disadvantages too. According to Shudong & Higgins (2005), the disadvantages of m-learning are grouped under three headings technical, psychologicaland pedagogical. This study considers the psychological and pedagogical aspects of m-learning. Individuals' personality traits are considered the most obvious disadvantage in the psychological aspect of m-learning. The effectiveness of m-learning varies depending on the individual's personality traits (Sha et al., 2012). The second major disadvantage of m-learning concerns the pedagogical aspect. The problems associated with giving feedback to individuals practicing m-learning are a pedagogical disadvantage (Shudong & Higgins, 2005). According to Chu (2014); another pedagogical problem associated with m-learning stems from the design of the m-learning environment. In addition, it is thought that it is important for individuals to be psychologically ready and have m-learning skills in m-learning environments where the technical infrastructure is ready and that are pedagogically well supported (Kalelioğlu & Baturay, 2014). Accordingly, the level of mobile-leaning readiness is expected to be high so that m-learning can be carried out positively (Lin & Hsieh, 2007).

The technical infrastructure of the learning environment is also important in the development of m-learning readiness (Corbeil & Valdes Corbeil, 2007). However, considering the use of wireless Internet facilities and mobile technologies for students to access information in higher education classes, this creates an important environment for cyberloafing as well (Fried, 2008; Lauricella & Kay, 2010). The concept of cyberloafing mainly appears in the literature as not doing work in the workplace (Block, 2001; Greenfield & Davis, 2002; Lim, 2002; Griffiths, 2010; Anandarajan et al., 2014, pp. 4-6; Hassan et al., 2015), although in the field of education (McBride et al., 2006; King, 2007; Ergün & Altun, 2011; Kalaycı, 2010; Yaşar, 2013; Polat, 2018; Arıkan & Özgür, 2019) it has started being defined as activities other than learning carried out in the virtual environment during the learning process. In the study made by King (2007), it was determined that staff and students alike did cyberloafing using technological tools outside of class. In the study by Brubaker (2006), it was determined that students use computers to spend time on different online activities without their teachers' knowledge. Examining the relationship between cyberloafing and the learning process, Polat (2018) stated it is possible for students to cyberloaf in class if there is unplanned or excessive use of technology. Indeed, cyberloafing can be observed distinctly in higher education classrooms today.

The concepts that will explain the psychological aspect of problematic smartphone use and the dilemma between m-learning and the cyberloafing identified with smartphone use during the learning

process reveal the paradigm of the study. Based on this, a review was made of the literature to determine the psychological factors relating to problematic smartphone use. The concepts of nomophobia and addiction associated with problematic smartphone use were identified.

It is understood from the related literature that cyberloafing by students in class is associated with such variables as nomophobia and addiction (Tindell & Bohlander, 2012; Berry & Westfall, 2015; Jacobsen & Forste, 2011; Smart & Traveler, 2016; Erdem et al., 2017; Şumuer et al., 2019; Demir & Seferoğlu, 2016; Keser et al., 2016; Gökçearslan et al., 2016). Indeed, both nomophobia and addiction are associated with cyberloafing. However, the relationship between cyberloafing, nomophobiaand addiction with respect to smartphone use reveals the complexity of the psychological process that is m-learning.

As a result of the literature review, it was determined that even though the relationship between any two of the m-learning, cyberloafing, nomophobiaand smartphone addiction variables has been studied, there exists no study in which all the variables are examined together. In this context, this study aims to determine using path analysis the relationships between the variables of pre-service teachers' m-learning readiness, cyberloafing, nomophobiaand smartphone addiction. In the rest of this paper, m-learning, cyberloafing, nomophobiaand smartphone addiction are explained using the relevant literature. Later, in light of the studies examining the relationships between the variables, models and hypotheses are created. The method used in the research and the results obtained according to the findings of the research are discussedand a model explaining the relationships between the variables is presented.

LITERATURE REVIEW

M-learning Readiness

When the literature on the definition of m-learning is examined, it can be seen that many definitions exist. According to Dye et al. (2003), m-learning is learning any time, anywhere using a portable computer. According to Trifonova & Ronchetti (2003), m-learning is a form of e-learning in which information is accessed via Wi-Fi and portable communication tools. According to Sharma & Kitchens (2004), m-learning is support for learning using mobile devices irrespective of time or location. In the research conducted by Frohberg, Goth, and Schwabe (2009), 102 mobile learning projects were categorized. They found that mobile learning takes place in different environments. It has been determined that mobile learning is performed effectively in formal corporate environments such as a classroom or a workplace. Laurillard (2007) emphasized the communication between learner and teacherand stated that m-learning is a form of digital support for learning that is manageable, collaborative, productiveand adaptable. Definitions that highlight the pedagogical aspects of m-learning can also be found in the literature. Traxler (2010), emphasized that m-learning can provide individual or social support in the learning process in any kind of pedagogical environmentand further stated that the devices used for m-learning have altered the contents of learning in pedagogical environments, as well as the forms in which material is stored and transmitted.

When the definitions of m-learning are examined, it is understood that the positive aspects of m-learning are emphasized. However, Cohen et al. (2012) discussed how m-learning supports learning in the classroom. They also emphasized that while m-learning does support learning in the classroom, it also comes with risks to learning that need to be considered. According to Lind & Hsieh (2007), it is necessary to determine the readiness levels of individuals to participate in m-learning using technological tools in learning environments. In the study by Christensen & Knezek (2017), it was determined that in m-learning environments, students' m-learning readiness increased incrementally as the teacher's proficiency increased. In the study by Cheon et al. (2012), it was determined that attitudes, subjective normsand behavioral control positively affected university students' readiness for and adoption of m-learning.

The literature also includes studies examining significant differences in m-learning readiness levels depending on various different variables. In these studies, variables such as gender (Trifonova et

al., 2006; Olcay et al., 2018), education level (Nwagwu, 2001; Alsancak et al., 2016), age (MacCallum & Jeffrey, 2009) and Internet usage level (Alsancak Sarıkaya and Yurdagül, 2016) were examined. Advanced studies examining m-learning readiness also exist. Other factors that affect learning practices such as technological learning, identifying students' needsand the pedagogical benefits have also been identified (Cheung et al., 2011; Alzaza & Yaakub, 2011). The relationship with lifelong learning skills has also been examined (Gür Erdoğan et al., 2017). It has been determined that teachers' m-learning readiness is affected by their technical know-how, the awareness levelsand their motivation (Alzaza, 2012; Mahamad et al., 2010). However, no study was found that examined m-learning readiness, cyberloafing, nomophobiaand smartphone addiction at the same time.

Cyberloafing

When the literature on the concept of cyberloafing is examined, it is generally defined as workers using their place of work's Internet for personal use in fields that have nothing to do with their job (Robinson & Bennett, 1995; Friedman, 2000, Lim, 2002; Griffiths, 2003; Zwass, 2006; Mahatakanoon, 2006; Bock & Ho, 2009). A person's use of mobile technologies at work for purposes other than work is also considered to be cyberloafing (Klotz & Buckley, 2013, p.125). According to Hassan et al (2015), it was determined that cyberloafing takes place under six categories. These categories are checking personal emails, investment and banking activities, social networks, traditional media, shoppingand pornography. According to Henle and Blanchard (2008), cyberloafing is divided into two. The first is the minor cyberloafing which is a term that you check e mails and visit entertainments at work. The second is serious cyberloafing which involves online gambling and spending time on pornographic sites. It has been observed that just as with working environments, providing access to the Internet via smartphones and laptops in learning environments also leads to the emergence of cyberloafing by using the Internet for purposes other than lessons (Fried, 2008; Lauricella & Kay, 2010; Laxman & Holt, 2017). According to Kalaycı (2010), cyberloafing in education is students' tendency or behavior toward using the Internet during the lesson for business not related to the lesson.

When the studies on cyberloafing in the field of education are examined, the study by Kalaycı (2010) carried out on 100 higher-education students showed that cyberloafing by students takes place mostly in the form of mail, discussion groups, blogs, bank transactions, shopping sites, auction sites, travel reservations, sports and news sitesand personal development sites. In the study by Brubaker's (2006) on 236 university students studying in higher education, it was found that during the lesson, students engaged in distracting, extracurricular activities such as surfing the Internet, playing digital games, texting, listening to musicand watching videos. The results of the study by Lauricella & Kay (2010) are similar to those in the study by Kalaycı (2010) and Brubaker (2006). A total of 137 higher-education students participated in the study by Fried (2008). According to the results of that study, it was reported that the use of technological tools during class for purposes other than learning resulted in learning deficiency and attention disorders. According to Wurst et al. (2008), cyberloafing resulted in a fall in student grade averages and academic success. According to the results of the study by Yaşar & Yurdagül (2013) on 215 higher education students, it was argued that cyberloafing may cause addiction.

When the studies on cyberloafing are examined, it is understood from the literature that negative situations do develop. However, it is argued that cyberloafing reveals inhibited creativity (Oravec, 2002), it helps the individual pull himself together when on a break (Polzer-Debruyne, 2008) and get away from the stressful environment (Ugrin et al., 2008) and that learning is supported by improving knowledge (Lavoie & Pychyl, 2001).

Since this study is going to provide an evaluation of the positive and negative features found in the literature together by examining the relationship between cyberloafing, m-learning readiness, smartphone addictionand nomophobia, it is thought it will make a contribution to the literature.

Nomophobia

Nomophobia is considered to be a disorder of contemporary digital and virtual society; it means discomfort, anxiety, tension, or suffering caused by the inability to have contact with a mobile phone or computer. It is the pathological fear of being separated from technology (Bragazzi & Puente, 2014). Furthermore, it is a health problem that negatively affects an individual's personality, self-esteem, worry, stress, academic performanceand other physical and mental health conditions; and that causes psychological problems, physical and behavioral changes (Rodriguez-Garcia et al., 2020). When we examine the population groups affected by nomophobia, it can be observed in university students (Bartwal & Nath, 2019; Farooqui et al., 2017) and other education levels, especially young people (Rosales-Huamani et al., 2019).

The study by Ferdous et al (2020) aimed to determine the perceived effects of mobile phone use by university students on their academic performance, their personal hygiene factorsand the psychological effects related to form of use. As a result of that study, it was determined that the majority of the participants stated that they used mobile phones in the toilet, they did not disinfect their phones, they used their phones until late at night, they put their phones under the pillow when going to bedand they stated that the use of mobile phones could prevent them from working. The results of the study also describe the characteristics of individuals who experience smartphone addiction and fear of being parted from their phone (nomophobia). The excessive and impulsive use of smartphones has produced many observable negative results in individuals. In particular, interpersonal communication and socialization processes are negatively affected (Gezgin et al, 2018; Pavithra, et al., 2015; Park & Park, 2014; Billieux, et al., 2008).

According to Yıldırım & Correia (2015), what individuals using mobile phones experience if they stay away from the phone anxiety about not having access to information, being out of touch, being unable to communicate, or not feeling at ease is called nomophobia.

In the study by Rodriguez-Garcia et al (2020), the databases relating to nomophobia (Scopus and Web of Science) were scanned and the work systematically examined. As a result of the study, it was determined that current research is still in the discovery phase, mostly working on adolescents and university students. The review determined that studies looking into the prevalence of nomophobia were descriptive and cross-sectional. When studies investigating the prevalence of nomophobia were examined, it was seen that in the study by Cheever et al. (2014) on 163 university students in the United States, half of the participants were asked to turn off their mobile phones and the other half were asked to hand over their phones. The anxiety levels of the participants were measured during their stay away from their phones and it was seen that their anxiety increased over time. The study by Tavolacci et al. (2015) in France investigated the prevalence of nomophobia using 760 college students. According to the results of that study, it was determined that almost one-third of the students suffered from nomophobia. The study conducted in Turkey by Adnan & Gezgin (2016) investigated the prevalence of nomophobia using 433 college students and determined that the students had higher than average levels of nomophobia.

According to Dixit et al. (2010), when an individual whose nomophobia level is above average is away from their phone or if their phone's battery dies, or if they are outside of coverage, their anxiety levels increase. As the level of anxiety rises, it becomes difficult for the individual to carry out their daily business. In this context, it is important to identify the relationship between nomophobia, which causes increased anxiety levels in university students, who extensively use smartphonesand m-learning readiness, addictionand cyberloafing.

Smartphone Addiction

Smartphone addiction is defined as when an individual feels disconnected and offline when they don't use a smartphoneand is anxious, irritableand angry when they have no smartphone (Duke & Montag, 2017). There is empirical evidence that most young people with smartphone addiction prefer

to communicate with others over their smartphones, because of their shyness and insecurity (Walsh, White ve Young, 2007). Kamibeggen and Sugiura (2005) found in their study that high school students use smartphones to make friends and check their e-mails. High school students who use smartphones sleep late and cannot wake up early. The students stated that they could not survive without a smart phone.

In the study by Shahrestanaki et al. (2020) investigating the relationship between university students' smartphone addiction and their quality of life, it was reported that smartphone addiction was more common in women and in married studentsand that it negatively affected their quality of life in physical, mentaland social terms.

Chen (2020) collected data from a large sample of 2,000 adolescents and young adults from three universities in Taiwanand explored the relative contribution of both psychological and social factors in predicting different usage levels of a social mobile application (LINE), which is very popular in Asia. In light of the findings obtained, he concludes that people who are lacking in self-esteem and social skills, but who seek the approval of others and a sense of belonging, are more likely to develop an addition to this app. It is also stated that people who used LINE intensively without it becoming a problem are quite happy with their livesand that this is the result of them not caring about living their lives according to others' expectations and because they have high self-esteem (Chen, 2020).

The study by Lepp et al. (2013) on 496 university students found a negative relationship between the use of mobile phones and academic success, but a positive one with anxiety. Investigating the effects of smartphone addiction in the teaching process, Roberts et al. (2014) emphasized that they observed academic failure in individuals as well as students becoming disconnected from classroom activities and quitting studying. Related studies have also determined that smartphone addiction adversely affects academic achievement (Kibona & Mgaya, 2015; Olufadi, 2015).

Studies showing a relationship between smartphone addiction and both nomophobia and cyberloafing were also found in the literature. On examining these studies, it was found that Yaşar & Yurdagül (2013) reported a significant statistical relationship between cyberloafing and addiction in a study conducted with 215 higher-education students. Gökçearslan et al. (2016) in their study, found a relationship between cyberloafing and smartphone addition. According to the results of their study, cyberloafing is a significant predictor of smartphone addiction. The study by Semerci (2019) determined that there is a relationship between nomophobia and smartphone addiction. According to the results of that study, nomophobia is the most important predictor of smartphone addiction. In this context, cyberloafing and nomophobia are thought to be important variables for smartphone addiction. A review of the literature found no study investigating the relationship between smartphone addiction and both nomophobia and cyberloafing.

THE STUDY'S MODEL AND HYPOTHESES

Smartphone Cyberloafing-M-learning Readiness

When the relationship between the m-learning readiness of students who do cyberloafing in class was examined by Tindell & Bohlander (2012), they determined that 95% of university students have their smartphones with themand that 92% of them do cyberloafing in class by texting. In the study by Jacobsen & Forste (2011), it was found that 96% of university students have a smartphone and that 62% of them use the phone for cyberloafing in class. In the study by Berry & Westfall (2015) it was determined that 37.6% of university students tend to check their mobile phones one or two times during their lessons. In the study by Gözüm et al. (2019), it was determined that there is a significant and positive relationship between m-learning readiness and cyberloafing. In the study by Varol & Yıldırım (2017), it was determined that cyberloafing takes place in environments where m-learning is carried out. Studies have been found advocating that cyberloafing has a positive effect on creativity, stress avoidanceand learning (Oravec, 2002; Polzer-Debruyne, 2008; Ugrin et al., 2008;

Lavoie & Pychyl, 2001). A review of the literature found a significant relationship between m-learning readiness and cyberloafing. Accordingly, the following hypothesis is proposed:

H_1: Smartphone cyberloafing in class (SPCSC) has a significant effect on m-learning readiness (MLRS).

Smartphone Cyberloafing - Smartphone Addiction

When the relationship between the smartphone addiction levels of students cyberloafing on their smartphones in class was examined, Kalaycı (2010), reported that students cyberloafing in class were using social media. Examining the relationship between smartphone addiction and social media use, (Roberts et al., 2014; Salehan & Negahban, 2013) reported a relationship between smartphone addiction and the emergence of cyberloafing (Rozgonjuk et al., 2018). There also exist studies examining the relationship between cyberloafing and Internet addiction (Demir & Seferoğlu, 2016; Keser et al., 2016). According to the literature review, there is thought to be a significant relationship between cyberloafing and smartphone addiction. Furthermore, according to Gökçearslan et al. (2016), cyberloafing causes smartphone addiction. Accordingly, the following hypothesis has been proposed, in view of the literature:

H_2: Smartphone cyberloafing in class (SPCC) has a significant effect on smartphone addiction (SA).

M-learning Readiness - Smartphone Nomophobia

When the relationship between m-learning readiness and nomophobia is examined, Spitzer (2015), who reviewed the results of 22 studies carried out in different countries, highlighted the risks that could arise if smartphones are used in educational environments. Some of these risks involve the possible development of anxiety and addition in students. In the study by Ak & Yıldırım (2019) with the participation of 146 university students, a positive and significant relationship was found between nomophobia and attitudes toward m-learning. A study involving 104 university students was conducted by Davie & Hilber (2017). As a result of that study, they pointed out that the use of mobile technologies in m-learning environments can cause nomophobia. They also proposed an investigation into what the mobile devices used by students in m-learning environments might cause. Accordingly, it is thought that the detection of a significant relationship between m-learning readiness and nomophobia will contribute to the literatureand so the following hypothesis has been proposed:

H_3: M-learning Readiness (MLR) has a significant effect on nomophobia (NMP).

Smartphone Nomophobia- Smartphone Cyberloafing

When studies on the relationship between smartphone cyberloafing and nomophobia in class were examined, it was seen that those university students prone to nomophobia tend to check their phones during the day (Akıllı & Gezgin, 2016) and it was determined that students with high levels of nomophobia use their smartphones more (Erdem et al., 2017). Şumuer et al. (2019) reported that among the factors leading to the use of mobile devices for extracurricular purposes, nomophobia was a significant predictor. Accordingly, the following hypothesis has been proposed in light of the relationship found in the literature between cyberloafing and nomophobia:

H_4 Nomophobia (NMP) has a significant effect on smartphone cyberloafing in class (SPCC).

Smartphone Nomophobia- Smartphone Addiction

When studies examining the relationship between nomophobia and addiction were examined, the study by Durak (2019) reported a significant relationship between nomophobia and smartphone

addiction in adolescents. The study by Semerci (2019), examined the relationship between smartphone addiction and nomophobia in secondary school students. As a result of the study, it was determined that there is a moderately significant relationship between nomophobia and smartphone addictionand that nomophobia is the strongest predictor of smartphone addiction. Accordingly, the following hypothesis has been proposed in light of the relationship between nomophobia and smartphone addiction reported in the literature:

H_5: Nomophobia (NMP) has a significant effect on smartphone addiction (SA).

It has been determined in the literature that there are significant relationships between the variables of addiction, nomophobia, cyberloafingand m-learning readiness in connection with pre-service preschool teachers' use of smartphones during bachelor degree education. In this context, a model proposal to determine the relationships between the variables of the study is presented (see Figure 1). The aim is to answer the research questions by testing the hypotheses identified in accordance with the model proposal.

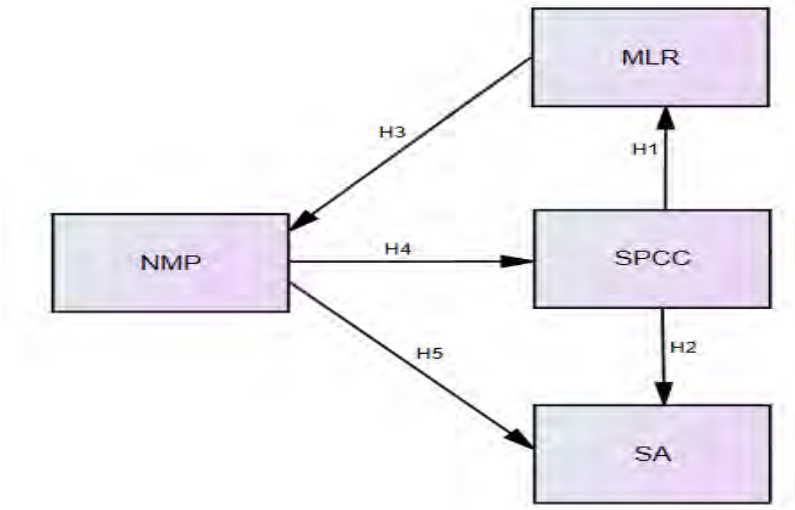

Fig1. The proposed structural model

In this model, the relationships between the variables as shown by one-way arrows form the hypotheses for the study (see Figure 1).These hypotheses are as follows:

H_1: Smartphone cyberloafing in class (SPCC) has a significant effect on m-learning readiness (MLR).

H_2: Smartphone cyberloafing in class (SPCC) has a significant effect on smartphone addiction (SA).

H_3: M-learning Readiness (MLR) has a significant effect on nomophobia (NMP).

H_4: Nomophobia (NMP) has a significant effect on smartphone cyberloafing in class (SPCC).

H_5: Nomophobia (NMP) has a significant effect on smartphone addiction (SA).

© 2020 INASED

METHOD

Participants

The research was carried out with 306 preschool pre-service teachers who were studying in the same departments at two state-run universities in the Eastern Anatolia Region of Turkey and selected using the purposeful sampling method. All of the participants stated they used smartphones in class. The distribution of the demographic characteristics of the participants is given in Table 1.

Table 1. Demographic characteristics of the sample

Variable	Type	n	%
Gender	Female	232	75.8
	Male	74	24.2
Classroom	1	103	33.7
	2	89	29.1
	3	64	20.9
	4	50	16.3
Age	18	36	11.8
	19	48	15.7
	20	55	18.0
	21	63	20.6
	22	31	10.1
	23	30	9.8
	24+	43	14.1
Total		306	100.0

According to the demographic characteristics in Table 1, 75.8% of the participants are female and 24.2% are male. Of the pre-service teachers participating in the study, 33.7% were in their first year, 29.1% in the second year, 20.9% in the third yearand 16.3% in the fourth year. More than half of the pre-service teachers (54.3%) were in the 19-21 age group.

Procedure

The data were collected from forms given by the researchers to the pre-service teachers in a classroom environment. The aim of the study was explained to the participants. Volunteers were asked to participate in the study. To protect privacy, the data shared by the participants were collected only by the researchers. The form given to the pre-service teachers took approximately 35 minutes to complete. Practice forms were given to six pre-service teachers to check the comprehensibility of the scale forms.

Instruments

In the study a data collection form consisting of two sections was used.At the start of the form, the question *"Do you use a smartphone in class?"* was asked. The participants who answered yes to this question were asked to answer the statements in the first and second sections. The first part of the form contained questions about demographic characteristics (age, gender, year of education). The second part included the m-learning readiness scale, smartphone cyberloafing in class scale, smartphone nomophobia scaleand the smartphone addiction scale. The forms used to gather research data had been adapted to Turkish for use with students undergoing education in Turkey. The data collection tools used in the study are described below, respectively.

Mobile Learning Readiness Scale

The Mobile Learning Readiness Scale developed by Lin et al. (2016) was adapted to Turkish culture by Gökçearslan et al. (2017).

The original form developed by Lin et al. (2016) and known as MLR was applied to 319 participants in Taiwan. Of the participants, 60% were university students. The scale was prepared in the form of a seven-point Likert scale. The levels of agreement on the scale range from (1) "Strongly Disagree" to (7) "Definitely Agree." As a result of the construct validity studies of the scale, a scale form consisting of 19 items grouped under three headings *"self-efficacy,""optimism,"*and "*Self-directed learning"* was created. With its three-factor structure, the scale explained 68.40% of the total variance. The Cronbach alpha value for the entire scale was found to be 0.93.

The form as adapted to Turkish by Gökçearslan et al. (2017) was applied to 698 university students in Turkey. As a result of the construct validity studies for the scale, it consists of three sub-scales and 17 items. When the sub-scale structure of the scale is analyzed, the first sub-scale (optimism) consists of seven items, the second sub-scale (self-efficacy) consists of six itemsand the third sub-scale (self-directed learning) consists of four items. As a result of the Confirmatory Factor Analysis (CFA) performed to test the construct validity of the scale, the fit indices were calculated as [$\chi2(698)=359.73$; (sd=108, p.=0.0000); $\chi2/sd=3.33$; RMSEA=0.058, GFI=0.94, AGFI=0.92, IFI=0.98, CFI=0.98and NFI=0.97]. It was determined that the total variance rate explained by the scale was 76.9%. In the reliability study of the scale, the internal consistency coefficient Cronbach alpha value was found to be 0.95.

Smartphone Cyberloafing Scale in Classes

The SPCSC developed by Blau et al. (2006) was adapted to Turkish culture by Polat (2018) and called the "Cyberloafing Scale."

The original SPCSC data collection tool developed by Blau et al. (2006) was applied to 267 participants to determine employees' cyberloafing levels. As a result of the construct validity tests for the scale, 16 factors were identified in three sub-scales, namely, *"browsing-related cyberloafing," "non-work-related cyberloafing,"*and *"interactive cyberloafing."* It was determined that the total variance rate explained by the scale was 51.3%. The Dynamic Factor Analysis (CFA) values of the three-factor structure were calculated as $X^2=311.47$; df=82; CFI=0.94; AGFI=0.90; RMS=0.032; RMSEA=0.061.

The Turkish adaptation scale developed by Polat (2018) was applied to 217 university students in Turkey. The participants in the study are studying Turkish, Social Studies, Preschool and Classroom teaching. In the Turkish version of the scale, in order to measure the level of cyberloafing in lessons, the expression *"From my smartphone in class…"* was added to each item taken from the original scale. The scale was prepared in the form of a six-point Likert scale. The agreement levels on the scale range from (1) "Never" to (6) "Always." As a result of the construct validity for the scale, it was determined that 16 items taken from the original form were grouped in a three-factor structure. However, it was determined that items from the original form were not in the same factor. The sub-scales that emerged as a result of construct validity were named "Browsing-related Cyberloafing," "Interactive Cyberloafing," and "Entertainment Cyberloafing." As a result of the CFA performed to test the construct validity of the scale, the fit indices were calculated as [$\chi2_{(217)} = 237.794$; (sd=101, p <0.001); $\chi2/sd=2.35$; GFI=0.86, RMSEA=0.085, RMR=0.132, SRMR=0.000, NNFI=0.86, CFI=0.88]. It was determined that the total variance rate explained by the scale was 56.6%. In the reliability study of the scale, the internal consistency coefficient Cronbach alpha value was found to be 0.88.

Smartphone Nomophobia Scale

The smartphone nomophobia questionnaire (NMP-Q) developed by Yıldırım & Correia (2015) was adapted to Turkish culture by Yıldırım et al. (2016).

The original form of the data collection tool (NMP-Q) developed by Yıldırım & Correia (2015) was applied to 300 university students. The questionnaire is a seven-point Likert scale. The levels of agreement on the scale range from (1) "Strongly Disagree" to (7) "Definitely Agree." As a result of the construct validity tests for the scale, a form was created comprising 20 items under four

sub-scales, namely, *"not being able to access information," "giving up convenience," "not being able to communicate,"* and *"losing connectedness."* With its four-factor structure, the scale explained 69.58% of the total variance. The Cronbach alpha value for the entire scale was found to be 0. 94. The original data collection form (NMP-Q) was converted into Turkish by Yıldırım, et al. (2016). In the process of translating from English to Turkish, expert opinion was sought and small adjustments made accordingly. The form adapted to Turkish was applied to 306 university students studying in Turkey. As a result of the CFA performed to test the construct validity of the scale in Turkish culture, the fit indices were calculated as [$\chi2_{(164)}$ = 469.90, χ^2/sd=2.86, CFI=0.92, RMSEA=0.08]. In the reliability study of the scale, the internal consistency coefficient Cronbach alpha value was found to be 0.92.

Smartphone addiction scale

Developed by Kwon et al. (2013), the Smartphone Addiction Scale (SAS) was adapted to Turkish culture by Şata et al. (2016). The SAS data collection tool was developed by Kwon et al. (2013) with the participation of 197 participants aged 18 to 53. The original form of the scale is a six-point Likert scale. The levels of agreement on the scale range from (1) "Strongly Disagree" to (6) "Definitely Agree." As a result of the construct validity studies for the scale, 33 items were identified grouped under three sub-scales named *"daily life disturbance," "positive anticipation,""feeling of withdrawal,""cyberspace-oriented relationship," and* "*overuse and tolerance.*" It was determined that the total variance rate explained by the scale was 61%. The Cronbach alpha value for the whole scale was found to be 0.96.

The original (SAS) data collection tool was converted into Turkish by Şata et al. (2016) and applied to 456 high school students. Qualitative methods were used when converting the original form into Turkish. CFA was applied to determine the validity and reliability scores for the Turkish form obtained as a result of expert opinion. When the CFA results are examined, the results [$\chi2_{(217)}$=1,220.11; (sd=486, p <0.001); $\chi2$/sd=2.51; RMSEA=0.058, GFI=0.84, AGFI=0.82, NNFI=0.96, CFI=0.96] show that it is suitable for Turkish culture. The Cronbach alpha value for the entire scale was found to be 0. 935.

Instrument Validity and Reliability

Validity and reliability analyses of the scales used in this study (MLRS, SPCSC, NMP-Qand SAS) were made using the data set consisting of pre-service preschool teachers. Table 2 CFA results revealed the fit index values and internal consistency coefficient.

Table 2. Data Collection Tools fit index and internal consistency values

Fit indices	MLRS	SPCSC	NMP-Q	SAS
($\chi2$/sd)	4.706	2.761	3.23	2.622
RMSEA	0.075	0.076	0.086	0.073
NFI	0.925	0.898	0.905	0.879
CFI	0.950	0.925	0.906	0.934
GFI	0.910	0.905	0.902	0.914
AGFI	0.892	0.965	0.904	0.915
IFI	0.943	0.927	0.907	0.936

When the CFA fit values for the data collection tools are analyzed according to Table 2; MLRS fit index values: [$\chi2$=508.270; (df=108, p <0.001); $\chi2$/sd=4.706; RMSEA=0.075, NFI=0.925, CFI=0.905 GFI=0.910, AGFI=0.892, IFI=0.940] When analyzed, it was determined that the $\chi2$/sd, RMSEA, NFI, CFI, GFIand IFI are in the good fit value range. According to Schermelleh-Engel et al. (2003), the AGFI value shows an acceptable fit.

The SPCSC fit index values: [$\chi2$=262.317; (df=95, p <0.001); $\chi2$/sd=2.761; RMSEA=0.076, NFI=0.898, CFI=0.925 GFI=0.905, AGFI=0.965, IFI=0.927] When analyzed, the $\chi2$/sd, RMSEA, CFI, GFI, AGFIand IFI values are a good fit. The NFI value is accepted as being at the lower limits of good fit at 0.900.

The NMP-Q fit index values: [$\chi2$=514.434; (df=159, p <0.001); $\chi2$/df=3.235; RMSEA=0.086, NFI=0.905, CFI=0.906, GFI=0.902, AGFI=0.904, IFI=0.907] When analyzed, the $\chi2$/sd, RMSEA, CFI, GFI, AGFIand IFI values are a good fit. The RMSEA value does not fit well.

The SAS fit index values: [$\chi2$=1258.553; (df=480, p <0.001); $\chi2$/sd=2.622; RMSEA=0.073, NFI=0.879, CFI=0.934, GFI=0.914, AGFI=0.915, IFI=0.936] When analyzed, the $\chi2$/sd, RMSEA, CFI, GFI, AGFIand IFI values are a good fit. The NFI value does not fit well.

The criteria accepted for fit values in the literature are given in section assumptions of model suitability. Accordingly, when the fit index values accepted as criteria in section assumptions of model suitability of the article are compared with the model's overall fit values without modification suggestions being made, the model fit index values are considered to be acceptable values.

Cronabach Alpha (α) values were analyzed for the internal consistency coefficient of the data collection toolsand determined to be: Internal consistency coefficient of MLRS (α=0.940), the internal consistency coefficient of the SPCSC (α=0.886), SAS internal consistency coefficient (α=0.934), the internal consistency coefficient of NMP-Q (α=0.923). Accordingly, the data collection tools used in the research (MLRS, SPCSC, NMP-Qand SAS) are valid and reliable.

Data analysis

Investigating assumptions

Before analyzing the dataset, the missing data, sample volume, univariate and multivariate normality, extreme valuesand multiple linearity values were examined (Tabachnick & Fidell, 2013). It was determined that there were no missing data in the dataset. According to Kline (2016), the observation parameter for the sample volume should be at least (10:1). The sample volume of the research meets this rate. In the analysis of univariate normal values, the kurtosis and skewness coefficients were found to be within normal values. Using scatter diagrams for the variables, it was determined that linearity was met. It was determined that the multicollinearity and singularity checks for the correlation matrix were significant. Variance Inflation Factor (VIF) and Tolerance (T) and Conditional Index (CI) values were checked to analyze the multiple linearity problem (Tabachnick and Fidell, 2013). It was determined that the VIF value was less than 10 (Myers, 1990), the T value was different from 0 (Menard, 1995)and the CI value was less than 30 (Paul, 2007). Accordingly, it was determined that there was no multiple linearity problem.

Assumptions of model suitability

CFA was applied to the dataset of the validity studies for the data collection tools used in this study. The fit indexes determined to evaluate the results of CFA and path analysis in the study are as follows: The ratio of chi square value to degree of freedom (*$\chi2$/sd.*), Root Mean Square Error of Approximation (RMSEA), Normed Fit Index (NFI), Comparative Fit Index (CFI), Goodness of Fit Index (GFI), Adjustment Goodness of Fit Index (AGFI)and Incremental Fit Index (IFI). According to the literature, the good and acceptable fit value ranges of the determined fit indices are given in Table 3.

Table 3. Fit indices of recommended guidelines

Fit indices	Good	Acceptable	References
($\chi2$/sd)	≤ 3	≤ 5	(Anderson & Gerbing, 1984; Kline, 2016)
RMSEA	≤ 0.05	0.06 to 0.08	(Jöreskog & Sörbom, 1993; Hu & Bentler,1998)
NFI	≥ 0.95	0.95 to 0.90	(Hu & Bentler, 1998; Tabachnick & Fidell, 2013)
CFI	≥ 0.95	≥ 0.90	(Tabachnick & Fidell, 2013)
GFI	≥ 0.95	≥ 0.90	(Shevlin & Miles, 1998; Hooper et al., 2008)
AGFI	≥ 0.95	≥ 0.90	(Hooper et al., 2008)
IFI	≥ 0.95	≥ 0.90	(Marsh & Hau, 1996)

Analysis Method

Structural Equation Modeling (SEM) analysis is a multivariate regression model that reveals causal relationships between observed variables (Kline, 2016). SEM is the examination of covariance among observed variables to make inferences about latent variables (Schreiber et al., 2006). SEM analysis offers an opportunity to examine the cause and effect relationship of the variables in mixed hypotheses relating to proposed models. The data obtained from the model research were analyzed using path analysis. The results obtained from the analysis were evaluated according to the model fit assumptions and various good fit indices. The AMOS 23 program was used for CFA and path analysis; the SPSS 21 program was used for dataset entry, item statisticsand test statistics.

RESULTS

In the findings, the relationships between the research variables are given first, then the results of the fit of the measurement modeland finally the path analysis values for the model. The relationship between the variables forming the model of the research and descriptive statistics are given in Table 4.

Table 4.Correlations among constructs, means, standard deviations, skewness, kurtosis

Constructs	1	2	3	4	M	SD	Skewness	Kurtosis
1. MLR	1				78.04	21.88	-0.28	-0.41
2. SPCSC	0.24**	1			40.15	14.76	0.31	-0.38
3. NMPQ	0.37**	0.37**	1		68.56	25.22	0.39	-0.39
4. SAS	0.19**	0.44**	0.66**	1	78.82	29.87	0.81	0.41

**. Correlation is significant at the 0.01 level (2-tailed), (N = 306)

Table 4 shows a significant relationship in the relationships between m-learning readiness, smartphone cyberloafing, smartphone nomophobiaand smartphone addiction ($p < 0.01$). In addition, it was determined that the kurtosis and skewness values, which are indicators for the normal distribution of variables, lie between -1 and +1. In light of the results of this analysis, other analyses were begun.

Model fit indexes for testing the structural equation model proposed in the research are shown in Table 5.

Table 5. Model fit indices

Fit indices	(χ2/sd)	RMSEA	NFI	CFI	GFI	AGFI	IFI
Values	4.027	0.069	0.987	0.990	0.993	0.935	0.990

The assumption of the suitability of the model fit values is given in section assumptions of model suitability of the article. Accordingly, when the model fit values of the research are analyzed according to Table 5, since (χ2=4.027; df=1; p=0.045) χ2/sd=4.027 is less than 5, this indicates an acceptable fit. The RMSEA value (RMSEA=0.069) shows an acceptable fit. The NFI value (NFI=0.987) shows a good fit. The CFI value (CFI=0.990) shows a good fit. The GFI value (GFI=0.972) shows a good fit. The AGFI value (AGFI=0.935) shows an acceptable fit. The IFI value (IFI=0.935) shows a good fit. When Table 5 is examined, it is understood that the fit index values of the model are good fit values. Accordingly, the model fit values support the acceptability of the model. The AMOS output showing the parameters in the model is shown in Figure 2.

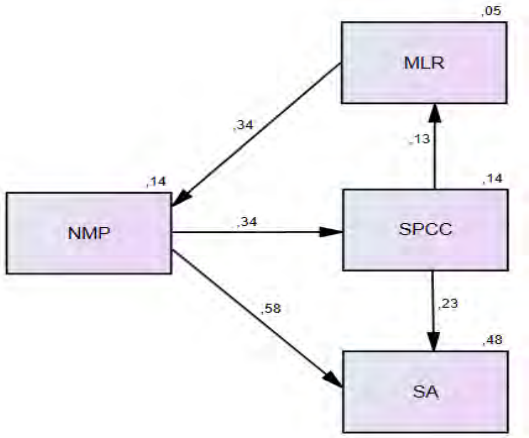

Fig 2. Path analysis results of the model's standardized estimates values

Path analysis was applied to test the hypotheses established between smartphone addiction, nomophobia, cyberloafingand m-learning readiness, which are the variables of the study. Path analysis results are given in Table 6.

Table 6. Path Analysis Results

			Standardized Estimate (β)	Unstandardized Estimate (β)	S.E	t	p	Hypothesis Result	
SPCC	→	MLR	0.132	0.167	0.079	2.117	.034	H1	Supported
SPCC	→	SA	0.227	0.460	0.090	5.107	.000	H2	Supported
MLR	→	NMP	0.335	0.387	0.065	5.974	.000	H3	Supported
NMP	→	SPCC	0.339	0.232	0.038	6.058	.000	H4	Supported
NMP	→	SA	0.575	0.795	0.062	12.917	.000	H5	Supported

According to Table 6, the SPCC variable (β=0.132; t=2.117; p <0.05) directly and positively affects the MLR variable. Accordingly, H_1 is supported. The SPCC variable (β=0.227; t=5.107; p <0.05) directly and positively affects the SA variable. Accordingly, the H_2 hypothesis is supported. The MLR variable (β=0.333; t=5.974; p <0.01) directly and positively affects the NMP variable. Accordingly, the H_3 hypothesis is supported The NMP variable (β=0.339; t=6.058; p <0.01) directly and positively affects the SPCC variable. Accordingly, the H_4 hypothesis is supported. The NMP variable (β=0.575; t=12.917; p <0.01) directly and positively affects the NMP variable. Accordingly, the H_5 hypothesis is supported.

The variables in the model (see figure 2) explain (R^2 =0.48) 48% of the variance in smartphone addiction explains; (R^2 =0.14) 14% of the variance in nomophobia; (R^2 =0.14) 14% of the variance in smartphone cyberloafing in class; and (R^2 =0.05) 5% of the variance in m-learning readiness.

DISCUSSION

The aim of this study is to determine the relationships between the variables of preschool teachers' m-learning readiness, smartphone cyberloafing, smartphone nomophobiaand smartphone addiction. Taking the relevant literature as a guideline, a model was created and five hypotheses were tested.

The amount of smartphone use and the availability of Wi-Fi access occupy important places in students' choice of location today (Bicen & Arnavut, 2015). So, university classrooms offer the highest level of Wi-Fi access. At this point, just as Wi-Fi access in class can be used by pre-service preschool teachers to increase m-learning readiness, it can also be used for cyberloafing. However, this study's

topic of discussion is smartphone addiction and nomophobia, which are caused by m-learning readiness or cyberloafing.

According to the results of the study, (H_1) says an increase in smartphone cyberloafing in class leads to an increase in m-learning readiness. It is stated in the literature that cyberloafing has positive effects on personal development opportunities, productivity, stress avoidanceand learning (Anandarajan et al., 2004; Oravec, 2002; Polzer-Debruyne, 2008; Runing Sawitri, 2012; Ugrin et al., 2008; Lavoie & Pychyl, 2001; Yaşar & Yurdugül, 2013). This being the case, the fact that cyberloafing increases m-learning readiness is an extremely important matter. Some studies in the literature (Askew, 2012; Bağrıaçık Yılmaz, 2016; Karaoğlan Yılmaz et al., 2015; Samaha & Havi, 2016) argue that the use of smartphones and cyberloafing may negatively affect the quality of education and prevent learning. In addition, it was found in the literature that cyberloafing leads to Internet addiction (Demir & Seferoğlu, 2016; Keser et al., 2016)and smartphone addiction (Gökçearslan et al., 2016). According to the results of the study, an increase in smartphone cyberloafing in class (H_2) causes an increase in smartphone addiction. This being so, the study reached both the conclusions seen in the literature. However, when the effect of cyberloafing on m-learning readiness (β=0.13) is compared with its effect on smartphone addiction (β=0.23), it is seen that the effect on smartphone addiction is greater. As a result of this study, it is thought that smartphone addiction may lead to serious consequences in terms of personal health that are just as important as the effect that smartphone cyberloafing in class has on the quality of education.

So, problematic situations relating to smartphone addiction were examined. Smartphone addiction has been associated with anxiety disorder (Chen et al., 2016; Bianchi & Phillips, 2005), impulsive behavior (Billieux et al., 2008; Billieux et al., 2007), loneliness (Bian & Leung, 2014), lack of self-control (Jeong et al., 2016), chronotype (Demirhan et al., 2016) and low self-esteem (Bianchi & Phillips, 2005; Hong, Chiuand Huang, 2012). In this context, it has been determined that cyberloafing, which causes smartphone addiction, is an important variable that needs to be taken under control.

M-learning readiness as a result of cyberloafing was considered to be positive feature when this discussion was first undertaken. However, there are studies that highlight the negative aspects of m-learning. Spitzer (2015) argued that using a smartphone in m-learning environments entails risks. One of the risks that emerge when m-learning environments are not planned properly is smartphone nomophobia. According to the results of the research, (H3) says that m-learning readiness directly and positively affects smartphone nomophobia. The results of this study support the conclusion by Davie & Hilber (2017) that m-learning may cause nomophobia. In addition, the level of relationship between the variables of m-learning readiness and nomophobia approximate the correlation values reported by Ak & Yıldırım (2016) in their study. Therefore, it becomes clear how important education environment planning is for the use of smartphones in m-learning environments. Indeed, in poorly planned m-learning environments, increases in nomophobia caused by increases in m-learning readiness can lead to the onset of serious health problems (Rodriguez-Garcia et al., 2020). According to Peters (2009), educators stated that they are aware of the risks that accompany the use of smartphones in the m-learning environment. Nomophobia has been associated with the frequency with which individuals check their smartphones (Akıllı & Gezgin, 2016), duration of smartphone usage (Erdem et al., 2017) and the Internet usage, lonelinessand forms of attachment associated with social networking (Nawaz et al.2017; King et al.2010; Durak, 2018). These related situations may provide important indicators for educators in an m-learning environment. Therefore, educators need to plan seriously how to use smartphones in m-learning environments.

According to the results of the study, (H_4-H_5) say that nomophobia directly and positively affects smartphone cyberloafing in class and smartphone addiction. The fact that nomophobia is a significant predictor of smartphone cyberloafing in class matches the conclusions of the study by Şumuer, Gezgin & Yıldırım (2019). That nomophobia causes smartphone addiction is similar to the conclusions of (Olivencia-Carrión et al. 2018; Semerci, 2019). Therefore, the research results found in the literature are in line with the results of this study. However, when the H_2 and H_5 hypotheses are examined, it can be seen that both nomophobia and cyberloafing cause smartphone addiction, but nomophobia (β=0.58) has a greater effect on smartphone addiction than it does on cyberloafing

(β=0.23). In addition, studies showing that smartphone addiction stems from underlying psychological effects must also be taken into consideration. It is also argued that smartphone addiction is related to such psychological problems as social phobia (King et al., 2013) and depression (Chen et al., 2016; Yen et al., 2009).

In light of the results of the study, when nomophobia is examined among the variables of cyberloafing and addiction, it is seen that nomophobia has an effect on both cyberloafing (H4) and addiction (H5). Indeed, this study's conclusion is extremely important because when the effects of nomophobia, smartphone addictionand cyberloafing are examined by age distribution, it appears prevalent in young people and adolescents with a high potential for productivity (Aggarwal, 2013; Gezgin & Çakır, 2016; Netburn, 2012; Lee t al., 2015). Therefore, it is clear that nomophobia is the variable that causes both cyberloafing and smartphone addiction. Based on this, the variable of nomophobia needs to be kept in check to prevent increase in addiction and cyberloafing in both m-learning environments and the most productive years of an individual's life. Olivencia-Carrión et al. (2018) argue that collaboration between people is an important variable for lowering the level of nomophobia.

CONCLUSION AND RECOMMENDATIONS

The conclusion reached by this study is that smartphones, which are used as an m-learning tool in learning environments or as a tool for cyberloafing, cause nomophobia and smartphone addiction. In the literature, it was determined that mental and physical health problems arise as a result of the impulsive use of smart phones by individuals (Aggarwal, 2013; Bian & Leung, 2014; De-Sola Gutiérrez et al., 2016; Haug et al., 2015; Sansone & Sansone, 2013; Spitzer, 2015). In this regard, preventative services to combat nomophobia and smartphone addiction resulting from the impulsive use of smartphones could be provided. Accordingly, software could be developed to regulate the online networks that might lead to cyberloafing as a result of going online using smartphones in higher education classrooms. Rules and planning for smartphone use in m-learning environments could be developed. Accordingly, projects aimed at the sensible use of smartphones in m-learning environments could be prepared. Seminars and training courses explaining the situations that cause nomophobia and smartphone addiction could be given.

LIMITATIONS

This study was conducted with participants consisting of pre-service preschool teachers in only two state-run universities. Considering these limitations, it is recommended that new studies be made with participants from different departments in different state-run universities. In addition, qualitative research could be done to determine in detail the relationship between the variables of the proposed model. In future studies, the model could be restructured according to the personal variables supported by the literature regarding the variables in the model.

REFERENCES

Abachi, H. R. & Muhammad, G. (2014). The impact of m-learning technology on students and educators. *Computers in Human Behavior, 30*, 491-496. https://doi.org/10.1016/j.chb.2013.06.018

Adnan, M & Gezgin, D . (2016). A Modern Phobia: Prevalence of Nomophobia among College Students. *Ankara University Journal of Faculty of Educational Sciences (JFES), 49* (1), 141-158. https://doi.org/10.1501/Egifak_0000001378

Aggarwall, K. K. (2013). Twenty-six percent of doctors suffer from severe mobile phone induced anxiety: Excessive use of mobile phone can be injurious to your health. *Indian Journal of Clinical Practice, 24* (1), 7-9.

Ak, N. Y. & Yildirim, S. (2018). Nomophobia among undergraduate students: The case of a Turkish State University. *International Journal on New Trends in Education and Their Implications,* 9 (4), 11-20. https://doi.org/ 10.14686/buefad.592443

Akıllı, G. K. & Gezgin, D. M. (2016). Üniversite öğrencilerinin nomofobi düzeyleri ile farklı davranış örüntülerinin arasındaki ilişkilerin incelenmesi. *Mehmet Akif Ersoy Üniversitesi Eğitim Fakültesi Dergisi, 1* (40), 51-69. https://doi.org/10.21764/efd.80423

Akkoyunlu, B. (2018). Why we should start implementing mobile learning in education? *In Proceedings of the 2nd International Conference on Distance Learning and Innovative Educational Technologies*, *12-13 December 2018*, Kızılcahamam, Ankara, Turkey.

Almunawar, M. N., Anshari, M., Susanto, H. & Chen, C. K. (2015). Revealing customer behaviour on smartphones. *International Journal of Asian Business and Information Management, 6* (2), 33–49. https://doi.org/10.4018/IJABIM.2015040103

Alsancak Sarıkaya, D. & Yurdagül, H. (2013). Çevrimiçi Öğrenme Hazır Bulunuşluluk Ölçeği: Geçerlik ve güvenirlik çalışması. *Eğitim ve Bilim, 38* (169), 391-406.

Alsancak Sarıkaya, D. & Yurdagül, H. (2016). Öğretmen adaylarının çevrimiçi öğrenme hazırbulunuşluluk düzeylerinin incelenmesi: Ahi Evran Üniversitesi örneği. Ahi Evran Üniversitesi *Kırşehir Eğitim Fakültesi Dergisi (KEFAD), 17* (1), 185-200.

Alzaza, N. S. & Yaakub, A. R. (2011). Students' awareness and requirements of mobile learning services in the higher education environment, *American Journal of Economics and Business Administration, 3* (1), 95-100. https://doi.org/10.3844/ajebasp.2011.95.100

Anandarajan, M., Simmers, C.A. & Teo, T. S. H. (2014). The internet and workplace transformation. In M. Anandarajan, T. S. H. Teoand C. A. Simmers (Eds.), The internet and workplace transformation (s. 3-11). Routlege

Anderson, J. C. & Gerbing, D. W. (1984). The effect of sampling error on convergence, improper solutions, and goodness-of-fit indices for maximum likelihood confirmatory factor analysis. *Psychometrika, 49* (2), 155–173. https://doi.org/10.1007/BF02294170

Arıkan, F. & Özgür, H. (2019). Öğretmen Adaylarının Siber Aylaklık ve Bilişsel Kapılma Düzeylerinin Çeşitli Değişkenler Açısından İncelenmesi. *Trakya Üniversitesi Sosyal Bilimler Dergisi, 21* (2), 863-885. https://doi.org/10.26468/trakyasobed.569532

Askew, K. L. (2012). *The relationship between cyberloafing and task performance and an examination of the theory of planned behavior as a model of cyberloafing.* (Unpublished post-graduate thesis). University of South Florida, USA.

Bağrıacık Yılmaz, A. (2017). Lisansüstü öğrencilerinin siber aylaklık düzeylerinin çeşitli değişkenler açısından incelenmesi: Karma bir çalışma. *Ahi Evran Üniversitesi Kırşehir Eğitim Fakültesi Dergisi, 18* (2), 113–134.

Baker, W. M., Lusk, E. J., & Neuhauser, K. L. (2012). On the use of cell phones and other electronic devices in the classroom: Evidence from a survey of faculty and students. *Journal of Education for Business, 87*, 275-289. https://doi.org/10.1080/08832323.2011.622814

Bartwal, J., & Nath, B. (2019). Evaluation of nomophobia among medical students using smartphone in north India. *Medical Journal Armed Forces India*, 1-5.

Berry, M. J. & Westfall, A. (2015). Dial D for distraction: The making and breaking of cell phone policies in the college classroom. *College Teaching, 63* (2), 62-71. https://doi.org/10.1080/87567555.2015.1005040

Bian, M. & Leung, L. (2014). Linking loneliness, shyness, smartphone addiction symptoms, and patterns of smartphone use to social capital. *Social Science Computer Review, 33* (1), 61-79. https://doi.org/10.1177/0894439314528779

Bian, M.& Leung, L. (2014). Smartphone addiction: Linking loneliness, shyness, symptoms and patterns of use to social capital. *Media Asia, 41* (2), 159–176. https://doi.org/10.1080/01296612.2014.11690012

Bianchi, A. & Phillips, J. G. (2005). Psychological predictors of problem mobile phone use. *CyberPsychology & Behavior, 8* (1), 39–51. https://doi.org/10.1089/cpb.2005.8.39

Bicen, H. & Arnavut, A. (2015). Determining the effects of technological tool use habits on social lives. *Computers in Human Behavior, 48*, 457-462. http://dx.doi.org/10.1016/j.chb.2015.02.012

Billieux J, Van der Linden M. & Rochat L. (2008). The role of impulsivity in actual and problematic use of the mobile phone. *Applied Cognitive Psychology, 22* (9), 1195-1210. https://doi.org/10.1002/acp.1429

Billieux, J., Van der Linden, M., d'Acremont, M., Ceschi, G. & Zermatten, A. (2007). Does impulsivity relate to perceived dependence on and actual use of the mobile phone? *Applied Cognitive Psychology, 21* (4), 527–537. https://doi.org/10.1002/acp.1289

Blanchard, A. L., & Henle, C. A. (2008). Correlates of different forms of cyberloafing: The role of norms and external locus of control. *Computers in human behavior*, *24*(3), 1067-1084.

Blau, G., Yang, Y. & Ward-Cook, K. (2006). Testing a measure of cyberloafing. *Journal of Allied Health, 35* (1), 9-17.

Block, W. (2001). Cyberslacking, business ethics and managerial economics. *Journal of Business Ethics, 33* (3), 225-231. https://doi.org/10.1023/A:1012002902693

Bock, G,-W.& Ho, S. L.(2009). Non-work related computing (NWRC).*Communications of the ACM, 52* (4), 124–128. https://doi.org/10.1145/1498765.1498799

Bragazzi, N. L. & Puente, G. D. (2014). A proposal for including nomophobia in the new DSM-V. *Psychology Research and Behavior Management, 7*, 155–160. https://doi.org/10.2147/PRBM.S41386

Brubaker, A. T. (2006). Faculty perceptions of the impact of student laptop use in a wireless internet environment on the classroom learning environment and teaching. A Master's Paper for the M.S. in I.S degree. The University Of North Carolina, North Carolina.

Cheever, N. A., Rosen, L. D., Carrier, L. M. & Chavez, A. (2014). Out of sight is notout of mind: the impact of restricting wireless mobile device use on anxiety levels among low, moderate and high users. *Computers in Human Behavior, 37*, 290-297. https://doi.org/10.1016/j.chb.2014.05.002

Chen, C. Y. (2020). Smartphone addiction: psychological and social factors predict the use and abuse of a social mobile application. *Information, Communication & Society, 23* (3), 454-467. https://doi.org/10.1080/1369118X.2018.1518469

Chen, L., Yan, Z., Tang, W., Yang, F., Xie, X.& He, J. (2016). Mobile phone addition levels and negative emotions among Chinese young adults: The mediating role of interpersonal problems. *Computers in Human Behavior, 55,* 856–866. https://doi.org/10.1016/j.chb.2015.10.030

Chen, X. B. (2013). Tablets for informal language learning: Student usage and attitudes. *Language, Learning & Technology, 17* (1), 20-36. http://dx.doi.org/10125/24503

Cheon, J., Lee, S., Crooks, S. & Song, J. (2012). An investigation of mobile learning readiness in higher education basedon the theory of planned behavior. *Computers & Education, 59*, 1054–1064. https://doi.org/10.1016/j.compedu.2012.04.015

Cheung, S. K., Yuen, K. S. & Tsang, E. Y. (2011). A study on the readiness of mobile learning in open education, In International Symposium on IT in Medicine and Education (ITME), IEEE, 1, 133-136.

Christensen, R. & Knezek, G. (2017). Readiness for integrating mobile learning in the classroom: Challenges, preferences and possibilities. *Computers in Human Behavior, 76*, 112-121. https://doi.org/10.1016/j.chb.2017.07.014

Chu, H. C. (2014). Potential negative effects of mobile learning on students' learning achievement and cognitive load-A format assessment perspective. *Educational Technology & Society, 17* (1), 332-344.

Ciampa, K. (2014). Learning in a mobile age: An investigation of student motivation. *Journal of Computer Assisted Learning, 30* (1), 82-96. https://doi.org/10.1111/jcal.12036

Corbeil, J. N. & Valdes Corbeil, M. E. (2007). Are you ready for mobile learning? *Educause Quarterly*, 2, 51-58.

Davie, N. & Hilber, T. (2017). Nomophobia: is smartphone addiction a genuine risk for mobile learning? 13th International Conference Mobile Learning, ISBN: 978-989-8533-61-6.

Demir, Ö & Seferoğlu, S . (2016). The Investigation of the Relationship of Cyber Bullying with Cyber Loafing, Internet Addiction, Information Literacy and Various Other Variables. *Online Journal of Technology Addiction and Cyberbullying , 3* (1) , 1-26.

Demirhan, E., Randler, C. & Horzum, M. B. (2016). Is problematic mobile phone use explained by chronotype and personality? *Chronobiology International, 33* (7), 821–831. https://doi.org/10.3109/07420528.2016.1171232

De-Sola Gutiérrez J., Rodríguez de Fonseca, F.& Rubio, G. (2016). Cell-phone addiction: A review. *Front Psychiatry, 24* (7), 1-15. https://doi.org/10.3389/fpsyt.2016.00175

Dixit, S., Shukla, H., Bhagwat, A., Bindal, A., Goyal, A., Zaidi, A. & Shrivastava, A. (2010). A study to evaluate mobile phone dependence among students of a medical college and associated hospital of central India. *Indian Journal of Community Medicine, 35* (2), 339-341. https://doi.org/10.4103/0970-0218.66878

Duke, E. & Montag, C. (2017). Smartphone addiction and beyond: Initial insights on an emerging research topic and its relationship to internet addiction. *Studies in Neuroscience, Psychology and Behavioral Economics*, 359-372. https://doi.org/10.1016/j.abrep.2017.07.002

Dukic, Z., Chiu, D. K. W. & Lo, P. (2015). How useful are smartphones for learning? Perceptions and practices of library and information science students from Hong Kong and Japan. *Library Hi Tech, 33* (4), 545-561. https://doi.org/10.1108/LHT-02-2015-0015

Durak, H. Y. (2018). Investigation of nomophobia and smartphone addiction predictors among adolescents in Turkey: Demographic variables and academic performance. The Social Science Journal, https://doi.org/10.1016/j.soscij.2018.09.003.

Dye, A., Solstad, B. & K'Odingo, J. A. (2003). Mobile Education-A Glance at The Future NITH Norges Informasjonsteknologiske Høgskole.

Erdem, H., Türen, U. & Kalkin, G. (2017). Mobil telefon yoksunluğu korkusu (Nomofobi) yayılımı: Türkiye'den üniversite öğrencileri ve kamu çalışanları örneklemi. *Bilişim Teknolojileri Dergisi, 10* (1), 1-12. https://doi.org/10.17671/btd.30223

Ergün, E. & Altun, A. (2012). Cyberloafingfrom students' perspective. *EducationalTechnology: Theory and Practice, 2* (1), 36–53. https://doi.org/10.1007/s10758-017-9340-1

Farooqui, I. A., Pore, P., & Gothankar, J. (2018). Nomophobia: an emerging issue in medical institutions?. *Journal of Mental Health*, *27*(5), 438-441.

Ferdous, T., Shuchi, S., Begum, A., Hossen, Md S. & Hossain, M. N. (2020). Mobile phone using pattern and the perception amongst university students in Dhaka city. *Bioresearch Communications-(BRC). Dhaka, Bangladesh, 6* (1), 872-881.

Fried, C. (2008). In-class laptop use and its effects on student learning. *Computers & Education, 50* (3), 906–914. https://doi.org/10.1016/j.compedu.2006.09.006

Frohberg, D., Goth, C., & Schwabe, G. (2009). Mobile learning projectsea critical analysis of the state of the art.*Journal of Computer Assisted Learning*, 25,307-331.

Geddes, S. J. (2004). Mobile learning in the 21st century: benefit for learners. *Knowledge Tree ejournal, 30* (3), 214-228. https://doi.org/10.1155/2014/412786

Gezgin, D. M. & Çakır, Ö. (2016). Analysis of nomofobic behaviors of adolescents regarding various factors. *Journal of Human Sciences, 13* (2), 2504-2519. https://doi.org/10.14687/jhs.v13i2.3797

Gezgin, D. M., Hamutoğlu, N.B., Samur, Y. & Yildirim, S. (2018). Genç nesil arasında yaygınlaşan bir bağımlılık: Akıllı telefon bağımlılığının cinsiyet, akademik başarı ve mobil oyun oynama değişkenleri açısından incelenmesi. *Eğitim Teknolojisi Kuram ve Uygulama, 8* (2), 212-231. https://doi.org/10.17943/etku.397112

Gökçearslan, Ş. Solmaz, E. & Kukul, V. (2017). Mobil Öğrenmeye Yönelik Hazırbulunuşluk Ölçeği: Bir uyarlama çalışması. *Eğitim Teknolojisi Kuram ve Uygulama, 7* (1), 143-157. https://doi.org/10.17943/etku.288492

Gökçearslan, Ş., Mumcu, F. K., Haşlaman, T. & Çevik, Y. D. (2016). Modelling smartphone addiction: The role of smartphone usage, self-regulation, general self-efficacy and cyberloafing in university students. *Computers in Human Behavior, 63*, 639-649. https://doi.org/10.1016/j.chb.2016.05.091

Gözüm, A. İ. C., Aksoy, N. & Erkul, R. (2019). Okul öncesi öğretmen adaylarının derslerde mobil öğrenme hazırbulunuşluklarının ve siber aylaklıklarının incelenmesi. *6. Uluslararası Okul Öncesi Eğitimi Kongresi, 2-5 Ekim 2019,* Kars, Türkiye.

Greenfield, D. N. & Davis, R. A. (2002). Lost in cyberspace: The web@ work. *Cyber Psychology & Behavior, 5* (4), 347-353. https://doi.org/10.1089/109493102760275590

Griffiths, M. (2003). Internet abuse in the workplace: Issues and concerns for employers and employment counselors. *Journal of Employment Counseling, 40* (2), 87-96. https://doi.org/10.1002/j.2161-1920.2003.tb00859.x

Griffiths, M. (2010). Internet abuse and internet addiction in the workplace. *Journal of Workplace Learning*, *22* (7), 463-472. https://doi.org/10.1108/13665621011071127

Gür Erdoğan, D., Bayat, S. & Şentürk, Ş. (2017). Pedagojik formasyon öğrencilerinin bit, e-öğrenme ve yaşam boyu öğrenme eğilimleri arasındaki ilişki. *Uluslararası Eğitim Programları ve Öğretim Çalışmaları Dergisi, 7* (13), 147-159.

Hassan, H. M., Reza, D. M. & Farkhad, M. A. A. (2015). An experimental study of influential elements on cyberloafing from general deterrence theory perspective case study: Tehran subway organization. *International Business Research, 8* (3), 91-98. http://dx.doi.org/10.5539/ibr.v8n3p91

Haug, S., Castro, R. P., Kwon, M., Filler, A., Kowatsch, T. & Schaub, M.P. (2015). Smartphone use and smartphone addiction among young people in Switzerland. *Journal of Behavioral Addictions, 4* (4),299-307. https://doi.org/10.1556/2006.4.2015.037

Hong, F. Y., Chiu, S. I. & Huang, D. H. (2012). A model of the relationship between psychological characteristics, mobile phone addiction and use of mobile phones by Taiwanese university female students. *Computers in Human Behavior, 28*, 2152–2159. https://doi.org/10.1016/j.chb.2012.06.020

Hooper, D., Coughlan, J. & Mullen, M. R. (2008). Structural equation modelling: Guidelines for determining model fit. *The Electronic Journal of Business Research Methods*, 6, 53-60. https://doi.org/10.21427/D7CF7R

Hu, L.-t. & Bentler, P. M. (1998). Fit indices in covariance structure modeling: Sensitivity to underparameterized model misspecification. *Psychological Methods, 3*(4), 424–453. https://doi.org/10.1037/1082-989X.3.4.424

Hwang, G. & Chang, H. (2011). A formative assessment-based mobile learning approach to improving the learning attitudes and achievements of students. *Computers & Education, 56* (4), 1023–1031. https://doi.org/10.1016/j.compedu.2010.12.002

Jacobsen, W. C. & Forste, R. (2011). The wired generation: Academic and social outcomes of electronic media use among university students. *Cyberpsychology, Behavior, and Social Networking, 14*(5), 275–280. https://doi.org/10.1089/cyber.2010.0135

Jaradat, R. M. (2014). Students' attitudes and perceptions towards using m-learning for French language learning: A case study on Princess Nora University. *International Journal of Learning Management Systems, 2* (1), 33-44. http://dx.doi.org/10.12785/ijlms/020103

Jeong, S. H., Kim, H., Yum, J. Y. & Hwang, Y. (2016). What type of content are smartphone users addicted to?: SNS vs. games. *Computers in Human Behavior, 54*, 10–17. https://doi.org/10.1016/j.chb.2015.07.035

Jöreskog, K. G. & Sörbom, D. (1984). *Lisrel VI. analysis of linear structural relationships by maximum likelihood, instrumental variables, and least squares methods.* Mooresville: Scientific Software.

Kalaycı, E. (2010). *Investigation of relationship between cyberloafing and self-regulated learning strategies among undergraduate students.* Unpublished doctoral dissertation, Hacettepe Üniversitesi, Fen Bilimleri Enstitüsü, Ankara, Turkey.

Kalelioğlu, F. & Baturay, M. (2014). E-Öğrenme için Hazırbulunuşluk Öz Değerlendirme Ölçeğinin Türkçe'ye Uyarlanması: Geçerlik ve Güvenirlik Çalışması. *Başkent University Journal of Education (BUJE)*, *1* (2), 22-30.

Kamibeppu, K., & Sugiura, H. (2005). Impact of the mobile phone on junior high-school students' friendships in the Tokyo metropolitan area. *Cyberpsychology & Behavior*, *8*(2), 121-130.

Karaoğlan Yılmaz, F. G., Yılmaz, R., Öztürk, H. T., Sezer, B. & Karademir, T. (2015). Cyberloafing as a barrier to the successful integration of information and communication technologies into teaching and learning environments.*Computers in Human Behavior*, *45*, 290–298. https://doi.org/10.1016/j.chb.2014.12.023

Keser, H., Kavuk, M. & Numanoğlu, G. (2016). The relationship between cyber-loafing and internet addiction. *Cypriot Journal of Educational Science, 11*(1), 37-42. https://doi.org/10.18844/cjes.v11i1.431

Kibona, L. & Mgaya, G. (2015). Smartphones' effects on academic performance of higher learning students. *Journal of Multidisciplinary Engineering Science and Technology*, *2* (4), 777-784.

King A. L. S., Valença A. M. & Nardi A. E. (2010). Nomophobia: The mobile phone in panic disorder with agoraphobia: Reducing phobias or worsening of dependence? *Cognit.Behav. Neurol, 23*, 52–54. https://doi.org/10.1097/WNN.0b013e3181b7eabc

King, A. L. S., Valença, A. M., Silva, A. C. O., Baczynski, T., Carvalho, M. R. & Nardi, A. E. (2013). Nomophobia: Dependency on virtual environments or social phobia? *Computers in Human Behavior, 29*, 140–144. https://doi.org/10.1016/j.chb.2012.07.025

King, B. J. (2007). Employee use of the internet and acceptable use policies in the academic workplace: controlling abuse while creating culture. The Faculty of the Department of Educational Leadership and Policy Analysis, East Tennessee State University, Master Dissertation

Kline, R. B. (2016). *Principle and practice of structural equation modelling* (4th ed.). The Guilford Press

Klotz, A. C. & Buckley, M. R. (2013). A historical perspective of counterproductive work behavior targeting the organization. *Journal of Management History, 19* (1), 114-132. https://doi.org/10.1108/17511341311286222

Köyüstü, S. (2018). Sanal kaytarma konusunda yapılmış tezlerin içerik analizi yöntemiyle incelenmesi (2010-2017). *International Journal of Academic Value Studies (Javstudies), 4* (20), 666-679.

Kukulska Hulme, A. (2005). *Introduction*. A. Kukulska hulme & J. Traxler (Ed.), In Mobile lerning: a handbook for educators and trainers, (p. 1-6) United Kingdom: Routledge

Kwon, M., Lee, J. Y., Won, W. Y., Park, J. W. & Min, J. A. (2013). Development and validation of a smartphone addiction scale (SAS). *Plos One, 8* (2), 1-7. https://doi.org/10.1371/journal.pone.0056936

Kwon, M., Lee, J. Y., Won, W. Y., Park, J. W., Min, J. A., Hahn, C., Gu, X., Choi, J. H., & Kim, D. J. (2013) Development and validation of a smartphone addiction scale (SAS). *PLoS ONE 8* (2): e56936. https://doi.org/10.1371/journal.pone.0056936

Lauricella, S. & Kay, R. (2010). Assessing laptop use in higher education classrooms: The laptop effectiveness scale (LES). *Australasian Journal of Educational Technology, 26* (2). https://doi.org/10.14742/ajet.1087

Laurillard, D. (2007). Pedagogical forms for mobile learning: framing research questions. In, Pachler, N. (ed), Mobile learning: towards a research agenda. (pp. 153-175).WLE Centre, IoE.

Lavoie, J.A.A. & Pychyl, T.A. (2001). Cyberslacking and the procrastinationsuperhighway: A Web-based survey of online procrastination, attitudes, and emotion. *Social Science Computer Review, 19* (4), 431–444. https://doi.org/10.1177/089443930101900403

Laxman, K. & Holt, C. (2017). Bring your own device or bring your own distraction. *International Journal on E-Learning, 16* (3), 245-263. https://doi.org/10.4172/2469-9837.1000170

Lee, J., Cho, B., Kim, Y. & Noh, J. (2015). Smartphone addiction in university students and its implication for learning. In Emerging issues in smart learning (pp. 297-305). Springer Berlin Heidelberg. http://dx.doi.org/10.1007/978-3-662- 44188-6_40.

Lepp, A., Barkley, J. E. & Karpinski, A. C. (2014). The relationship between cell phone use, academic performance, anxiety, and satisfaction with life in college students. *Computers in Human Behavior*, *31*, 343-350. https://doi.org/10.1016/j.chb.2013.10.049

Lim, V. K. (2002). The IT way of loafing on the job: Cyberloafing, neutralizing and organizational justice. *Journal of Organizational Behavior, 23* (5), 675-694. https://doi.org/10.1002/job.161

Lin, H. H., Lin, S., Yeh, C. H. & Wang, Y-S. (2016). Measuring mobile learning readiness: scale development and validation. *Internet Research, 26*(1), 265-287. https://doi.org/10.1108/IntR-10-2014-0241

Lin, J. S. C. & Hsieh, P. L. (2007). The influence of technology readiness on satisfaction and behavioral intentions toward selfservice technologies. *Computers in Human Behavior, 23* (3), 1597-1615. https://doi.org/10.1016/j.chb.2005.07.006

MacCallum, K. & Jeffrey, L. (2009). Identifying discriminating variables that determine mobile learning adoption by educators: An initial study. Same places, different spaces, Proceedings ascilite Auckland 2009, 602- 608.

Mahamad, S., Ibrahim, M. N. & Taib, S. M. (2010). M-learning: A new paradigm of learning mathematics in Malaysia. *International Journal of Computer Science & Information Technology, 2* (4), 76-86. https://doi.org/10.5121/ijcsit.2010.2407

Mahatakanoon, P. (2006). Internet abuse in the workplace. M. Anandarajan, T. S. H. Teo, C. A. Simmers (Eds.), In The internet and workplace transformation (s. 5-27). Routledge

Marsh, H. W. & Hau, K. T. (1996). Assessing goodness of fit: Is parsimony always desirable? *The Journal of Experimental Education*, *64* (4), 364-390. https://doi.org/10.1080/00220973.1996.10806604

Martin, F. & Ertzberger, J. (2013). Here and now mobile learning: An experimental study on the use of mobile technology. *Computers & Education, 68*, 76-85. https://doi.org/10.1016/j.compedu.2013.04.021

McBride, J., Milligan, J. & Nichols, J. (2006). Who¨s teaching the kids? Cyberslacking in the classroom. *Journal of College & Character, 7* (1). https://doi.org/10.2202/1940-1639.1500

Menard, S. (1995). *Applied logistic regression analysis.* Sage.

Myers, R. (1990). *Classical and modern regression with applications* (2nd ed). Duxbury.

Nakamura, H., Hanamitsu, N. & Minamizawa, K. (2015). A (touch)ment: A smartphone extension for instantly sharing visual and tactile experience. In *Proceedings of the 6th Augmented Human International Conference,* 223–224.

Nawaz, I., Sultana, I., Amjad, M. J. & Shaheen, A. (2017). Measuring the enormity of nomophobia among youth in Pakistan.*Journal of Technology in Behavioral Science, 2* (3-4), 149-155. https://doi.org/10.1007/s41347-017-0028-0

Netburn, D. (2012). Nomophobia - fear of being without your phone - on the rise. Time website: https://www.smh.com.au/technology/nomophobia--fear-of-being-without-your-phone--on-the-rise-20120220 -1ti2s.html

Nwagwu, W. (2001). Factors influencing the adoption of mobile telephony by students at the University of Ibadan, Nigeria. Time website: http://acrulet.net/yahoo_site_admin/assets/docs/72nwagwuodetumibi.205102350.pdf

O'Malley, C., Vavoula G., Glew, J., Taylor J., Sharples, M., Lefrere, P., Lonsdale, P., Naismith, L. & Waycott, J. (2005). Guidelines for learning/teaching/tutoring in a mobile environment. *Mobilearn Deliverable*, *4* (1), 1-86.

Olcay, A., Döş, B., Sürme, M. & Düzgün, M. (2018). Turizm eğitimi alan öğrencilerin elektronik öğrenmeye hazırbulunuşluklarını belirlemeye yönelik bir çalışma. *Kastamonu Educational Journal, 26* (2), 427-438.

Olivencia-Carrión, M. A., Ferri-García, R., Rueda M. D. M., Jiménez-Torres M.G. & López-Torrecillas F. (2018). Temperament and characteristics related to nomophobia. *Psychiatry Res*, 266, 5-10. https://doi.org/10.1016/j.psychres.2018.04.056

Olufadi, Y. (2015). A configurational approach to the investigation of the multiple paths to success of students through mobile phone use behaviors. *Computers & Education, 86*, 84–104. https://doi.org/10.1016/j.compedu.2015.03.005

Ovarec, J.A. (2002). Constructive approaches to internet recreation in the workplace. *Communications of the ACM, 45* (1), 60-63. https://doi.org/10.1145/502269.502298

Pachler, N., Bachmeir, B. & Cook, J. (2010). *Mobile learning: Structures, agencies, practices.* Springer

Park, C. & Park, Y. R. (2014). The conceptual model on smartphone addiction among early childhood. *International Journal of Social Science and Humanity, 2* (4), 147-150. https://doi.org/10.7763/IJSSH.2014.V4.336

Paulson, D. S. (2007). *Handbook of regression and modeling.* Chapman & Hall/CRC.

Pavithra, M. B., Madhukumar, S. & Mahadeva, M. (2015). A study on nomophobia-mobile phone dependence, among students of a medical college in Bangalore. *National Journal of Community Medicine, 6* (3), 340–344. http://dx.doi.org/10.18203/2394-6040.ijcmph20191814

Peters, K. (2009). M-learning: Positioning Educators for a Mobile, Connected Future. Mobile Learning: Transforming the Delivery of Education and Training. (ed.M. Alley). AU Press.

Polat, M. (2018). Derslerde akıllı telefon siber aylaklığı ölçeği (DATSAÖ): Üniversite öğrencileri için bir ölçek uyarlama çalışması. *Social Sciences Studies Journal, 4* (21), 3114-3127.

Polzer-Debruyne, A. M. (2008). *Psychological and Workplace Attributes that Influence Personal Web Use (PWU)*. Unpublished doctoral thesis, Industrial/Organizational Psychology, Massey University, New Zealand.

Roberts, J. A., Petnji Yaya, L. H. & Manolis, C. (2014). The invisible addiction: Cell-phone activities and addiction among male and female college students. *Journal of Behavioral Addictions, 3* (4), 254-265. https://doi.org/10.1556/JBA.3.2014.015

Robinson, S. L. 6 Bennett, R. J. (1995). A typology of deviant workplace behavior: Amultidimensional scaling study. *Academy of Management Journal, 38* (2), 555–572. https://doi.org/10.2307/256693

Rodriguez-Garcia, A. M., Moreno-Guerrero, A. J. & Belmonte, J. L. (2020). Nomophobia: An individual's growing fear of being without a smartphone-a systematic literature review. *International Journal of Environmental Research and Public Health, 17*, 580. https://doi.org/10.3390/ijerph17020580

Rosales-Huamani, J. A., Guzman-Lopez, R. R., Aroni-Vilca, E. E., Matos-Avalos, C. R., & Castillo-Sequera, J. L. (2019). Determining symptomatic factors of nomophobia in peruvian students from the national university of engineering. *Applied Sciences*, *9*(9), 1814.

Rozgonjuk, D., Saal, K. & Täht, K. (2018). Problematic smartphone use, deep and surface approaches to learning, and social media use in lectures. *International Journal of Environmental Research and Public Health, 15(*1), 92. http://dx.doi.org/10.3390/ijerph15010092

Salehan, M. & Negahban, A. (2013). Social networking on smartphones: When mobile phones become addictive. *Computers in Human Behavior, 29* (6), 2632-2639. http://dx.doi.org/10.1016/j.chb.2013.07.003

Samaha, M. & Hawi, N. S. (2016). Relationships among smartphone addiction, stress, academic performance, and satisfaction with life. *Computers in Human Behavior, 57*, 321-325. http://dx.doi.org/10.1016/j.chb.2015.12.045

Sansone, R.A. & Sansone, L.A. (2013). Cell phones the psychosocial risks. *Clin Neurosci, 10* (1), 33-37.

Schermelleh-Engel, K., Moosbrugger, H. & Müller, H. (2003). Evaluating the Fit of Structural Equation Models: Tests of Significance and Descriptive Goodness-of-Fit Measures. *Methods of Psychological Research, 8* (2), 23–74.

Schreiber, J. B., Nora, A., Stage, F. K., Barlow, E. A. & King, J. (2006). Reporting structural equation modeling and confirmatory factor analysis results: A review. *The Journal of Educational Research,* 99 *(6),* 323-338. https://doi.org/10.3200/JOER.99.6.323-338

Semerci, A. (2019). Nomophobia as the predictor of secondary school students' smartphone addiction. *Bartın University Journal of Faculty of Education*, *8* (3), 947-965. https://doi.org/10.14686/buefad.592443

Sha, L., Looi, C. K., Chen, W., Seow, P. & Wong, L. H. (2012). Recognizing and measuring self-regulated learning in a mobile learning environment. *Computers in Human Behavior, 28* (2), 718-728. https://doi.org/10.1016/j.chb.2011.11.019

Shahrestanaki, E., Maajani, K., Safarpour, M., Ghahremanlou, H. H., Tiyuri, A. & Sahebkar, M. (2020). The relationship between smartphone addiction and quality of life among students at Tehran University of Medical Sciences. *The Turkish Journal on Additions, 7*, 61-66. https://doi.org/10.15805/addicta.2020.7.1.0080

Sharma, S. K. & Kitchens, F. L. (2004). Web services architecture for m-learning. *Electronic Journal of eLearning, 2* (1), 203-216.

Shevlin, M. & Miles, J. N. V. (1998). Effects of sample size, model specification and factor loadings on the GFI in confirmatory factor analysis. *Personality and Individual Differences, 25* (1), 85–90. https://doi.org/10.1016/S0191-8869(98)00055-5

Shih, J. L., Chuang, C. W. & Hwang, G. J. (2010). An inquiry-based mobile learning approach to enhancing social science learning effectiveness. *Educational Technology & Society, 13* (4), 50-62.

Shudong, W. & Higgins, M. (2005, November). Limitations of mobile phone learning. In Wireless and Mobile Technologies in Education, 2005. WMTE 2005. IEEE International Workshop on (pp. 3-pp). IEEE.

Spitzer, M. (2015). M-Learning? When it comes to learning, smartphones are aliability, not an asset. *Trends in Neuroscience & Education, 4,* 87–89.

Şata, M., Çorbacı, E. C., & Koyuncu, M. S. (2019). Mobil öğrenmeye hazırbulunuşluk ölçeği'nin uyarlanması: Geçerlik ve güvenirlik çalışması. *Gazi Üniversitesi Eğitim Fakültesi Dergisi, 39* (3), 1513-1533.

Şenel, S., Günaydın, S., Sarıtaş, M.T. & Çiğdem, H. (2019). Üniversite öğrencilerinin siber aylaklık seviyelerini yordayan faktörler. *Kastamonu Eğitim Dergisi, 27* (1), 95-105. https://doi.org/10.24106/kefdergi.2376

Şumuer, E., Gezgin, D. M. & Yıldırım, S. (2018). Üniversite Öğrencilerinin Ders Sırasında Öğretim Amacı Dışında Mobil Telefon Kullanımına Etki Eden Faktörlerin İncelenmesi. *Sakarya University Journal of Education, 8* (4), 7-19. https://doi.org/10.19126/suje.378459

Tabachnick, B. G. & Fidell, L. S. (2013). *Using multivariate statistics* (6th ed.). Pearson Education.

Tavolacci, M. P., Meyrignac, G., Richard, L., Dechelotte, P. & Ladner, J. (2015). Problematic use of mobile phone and nomophobia among French college students. *The European Journal of Public Health, 25*(suppl 3), ckv172-088.

Tindell, D. R. & Bohlander, R. W. (2012). The use and abuse of cell phones and text messaging in the classroom: A survey of college students. *College Teaching*, *60* (1), 1-9. https://doi.org/10.1080/87567555.2011.604802

Traxler, J. (2010). The learner experience of mobiles, mobility and connectedness. *Background Paper to Presentation, 21*, 13-14.

Trifonova, A. and Ronchetti, M. (2003). A general architecture for m-learning. Department of Informatics and Telecommunications. Povo (Trento). University of Trento.

Trifonova, A., Georgieva, E. & Ronchetti, M. (2006). Determining students' readiness for mobile learning. In Proceedings of the 5th WSEAS International Conference on E-ACTIVITIES (ELearning, E-Communities, ECommerce, E-Management, E-Marketing, E-Governance, Tele-Working) (E-ACTIVITIES'06), Venice, Italy.

Ugrin, J., Odom, M. & Pearson, J. (2008). Exploring the importance of mentoring for newscholars: A social exchange perspective. *Journal of Information Systems Education 19* (3), 343–350.

Varol, F. & Yıldırım, E. (2017). Siberaylaklık: Yükseköğrenim ve mobil teknolojiler. *Mersin Üniversitesi Eğitim Fakültesi Dergisi, 13* (3), 1046-1057. https://doi.org/10.17860/mersinefd.321313

Walsh, S. P., & White, K. M. (2007). Me, my mobile, and I: The role of self-and prototypical identity influences in the prediction of mobile phone behavior. *Journal of Applied Social Psychology*, *37*(10), 2405-2434.

Wurst, C., Smarkola, C. & Gaffney, M. A. (2008). Ubiquitous laptop usage in highereducation: Effects on student achievement, student satisfaction, and constructivist measures in honors

and traditional classrooms. *Computers & Education, 51* (4), 1766-1783. https://doi.org/10.1016/j.compedu.2008.05.006

Yaşar, S. & Yurdugül, H. (2013). The investigation of relation between cyberloafing activities and cyberloafing behaviors in higher education. *Procedia-Social and Behavioral Sciences, 83*, 600-604. https://doi.org/10.1016/j.sbspro.2013.06.114

Yen, C. F., Tang, T. C., Yen, J. Y., Lin, H. C., Huang, C. F., Liu, S. C. & Ko, C. H. (2009). Symptoms of problematic cellular phone use, functional impairment and its association with depression among adolescents in Southern Taiwan. *Journal of Adolescence, 32* (4), 863–873. https://doi.org/10.1016/j.adolescence.2008.10.006

Yildirim, C. & Correia, A. P. (2015). Exploring the dimensions of nomophobia: Development and validation of a self-reported questionnaire. *Computers in Human Behavior, 49*, 130-137. https://doi.org/10.1016/j.chb.2015.02.059

Yildirim, C., Sumuer, E., Adnan, M. & Yildirim, S. (2016). A growing fear: Prevalence of nomophobia among Turkish college students. *Information Development, 32* (5), 1322-1331. https://doi.org/10.1177/0266666915599025

Zwass, V. (2006). The internet and workplace transformation. Routlege