DOCUMENT RESUME

ED 275 904 CE 045 527

| | |
|---|---|
| TITLE | Electrical Sensing Devices. |
| INSTITUTION | Montana State Univ., Bozeman. Dept. of Agricultural and Industrial Education. |
| SPONS AGENCY | Montana State Office of Public Instruction, Helena. Dept. of Vocational Education Services. |
| PUB DATE | Jul 86 |
| NOTE | 53p. |
| PUB TYPE | Guides - Classroom Use - Guides (For Teachers) (052) |
| EDRS PRICE | MF01/PC03 Plus Postage. |
| DESCRIPTORS | Agribusiness; *Agricultural Education; *Agricultural Production; Behavioral Objectives; Electric Circuits; *Electricity; Electric Motors; *Electronic Control; *Electronic Equipment; Higher Education; Learning Activities; Teaching Methods; Units of Study; *Vocational Education |
| IDENTIFIERS | *Electrical Sensing Devices |

ABSTRACT

This unit of instruction on electrical sensing devices is designed especially for use with freshman vocational agriculture students. A unit plan discusses the general aims and goals, lesson titles, student and teacher activities, and references. The unit consists of four lessons. A lesson plan for each lesson provides these components: need; references; objectives; interest approach; an outline of key questions, problems, and concerns with appropriate teaching techniques and information; application and followup; and transparency masters, exercises, handouts, and/or worksheets. Lesson topics are: electric controls and control circuits, using switches to control electrical equipment, using relay devices in the electrical circuit, using magnetic or automatic electric motor control devices, and using automatic sensing control devices. (YLB)

# ELECTRICAL SENSING DEVICES



Agricultural & Industrial Education, Montana State University, Bozeman

# ELECTRICAL SENSING DEVICES

The work presented here was supported by the
Montana Office of Public Instruction
Department of Vocational Education
Services

Montana State University
Department of Agricultural & Industrial Education
Room 126, Cheever Hall, Bozeman, Montana
July, 1986

# FOREWORD

This unit of instruction has been designed especially for use with freshmen vocational agriculture students. For your convenience, the material has been prepared to fit into a three-ring, loose-leaf notebook. Other material that is prepared to accompany this unit of instruction will be prepared in a similar manner.

The instructor should study the entire unit carefully before attempting to teach any of the lessons. The key concepts that should be presented to meet the objectives of the core curriculum are included; however, all material that would be applicable may not be provided. Each instructor should look for ways to include additional material where appropriate.

Some handouts and visual materials are included with each lesson. Here again, each teacher may have additional illustrative material that would be appropriate. It is also important to have available all references listed in the unit. The lesson content is based on the references listed; however, there are many more references that could be listed with this unit.

TABLE OF CONTENTS

# UNIT PLAN

Unit: Electrical Sensing Devices

Situation:

Electricity has had a tremendous impact on mechanization and automation in agriculture production and agribusiness. The use of electrical sensing devices has resulted in many labor saving arrangements. In many courses the use of electrical sensing devices has resulted in greater accuracy and reliability and ultimately greater productivity.

The demand for and use of electricity will continue to grow. As its use increases, more and more producers and business persons will use electrical sensing equipment to gain better control over their production inputs. More use of such equipment means more opportunity to be faced with caring for and repairing electrical sensing units. The ability to examine, repair and connect this equipment will become increasingly important.

General Aims and Goals:

1. To acquaint the students with the various types of electrical control devices.

2. To illustrate to the students how electrical control devices can modify or change the way we perform common tasks.

3. To help the students see how the proper use of electrical control devices can provide both comfort and convenience, as well as some time and money.

4. To provide training needed to help the students develop those skills required to understand and use electrical sensing devices.

Lesson Titles:

1. Electric Controls & Control Circuits
2. Using Switches to Control Electrical Equipment
3. Using Relay Devices in the Electrical Circuit
4. Using Magnetic or Automatic Electric Motor Control Devices
5. Using Automatic Sensing Control Devices

Student Activities:

1. Each student will disassemble and reassemble electrical devices.

2. The students will complete worksheets on various electrical devices.

3. The students will wire circuits which include electrical control devices.

Teacher Activities:

1. Prepare a series of "overlays" for instructional purposes.

2. Purchase multiples of the various control devices included in the lesson.

3. Gather an assortment of reference material for classroom use.

4. Prepare a series of demonstrations with electrical control devices.

References:

Gustafson, Robert J. Fundamentals of Electricity for Agriculture, AVI Publishing Co., Inc., Westport, Connecticut, 1980.

Bear, Hoerner, Electric Motors, Principles, Controls, Service and Maintenance, Hobar Publications, St. Paul, MN, 1983.

_____, Suggestions for Teaching Electrical and Basic Controls Used in Agricultural Production, Edison Electric Institute, New York, New York.

UNIT: Electrical Sensing Devices

Lesson 1: Electric Controls and Control Circuits

Need:

The use of electrical controls has had a tremendous effect on mechanization and automotion in production agriculture and agribusiness. In many cases, the use of automatic controls has resulted in greater accuracy and more reliability. Because of the increased use of electrical sensing devices, we must have a general understanding of how they work.

References:

Electrical and Basic Controls Used in Agriculture Production, Hobson.

Fundamentals of Electricity for Agriculture, Gustafson.

Objectives:

Given examples of non-automatic and automatic control devices, the students will be able to:

a. Describe why and where they are used.
b. Identify both types.

Given examples of the different types of switches, the students will be able to identify them without using references.

Interest Approach:

Prepare an electrical circuit in advance of class that includes an automatic timer. Set the timer so it will activate the device while you are introducing the lesson. Then begin to talk about the advantages of using such a device.

| Key Questions, Problems and Concerns | Teaching Techniques and Information |
|---|---|
| 1. Why is agriculture so dependent on electrical controls? | a. There are many good reasons why electrical controls are so popular.<br>1. Save time.<br>2. Save labor.<br>3. They (controls) don't forget (accurate and reliable). |

4. Makes equipment more adaptable.
5. Saves money (labor).

2. What are the basic functions of electrical control?

a. Using the various types of electrical controls allows us to:

1. Build in many <u>safety</u> features. Example: breaker, etc.

2. Make our work more <u>convenient</u>. Example: time clock, etc.

3. Create a more <u>comfortable</u> environment. Example: thermostat, etc.

4. Provide desired type motion. Example: relay, etc.

3. What are some examples of some non-automatic type controls? Note: show these to students as you discuss them.

a. These are the devices that require the help of an operator. However, they are very simple.

1. The attachment plug on the end of an appliance cord.

2. Snap action switch.
   a. Review the operation of the switch.

3. Magnetic switch.
   a. Hand activated.
   b. Pushing the start button supplies a small amount of current to the electromagnet.
   c. The start button may be away from the actual device.

4. Show the students a group of automatic control devices.

a. There are many automatic devices that make our work easier. These devices have two basic parts; <u>a sensing element</u> and a <u>switch</u>. The sensing element reacts automatically.

1. A humidistat.
2. Magnetic relay.
3. Thermostatic switch.

5. Review some common terms associated with control devices.

a. Become familiar with the language we use when discussing control devices.

1. Switches (OH 1)
   a. Single pole.
      1. They break only one line of wire.
      2. Generally used in 120 volt circuits.

   b. Double pole (OH 2)
      1. Break two line wires.
      2. Used on 240 volt systems.

   c. Three pole. (OH 3)
      1. Used in 3-phase circuits.
      2. The switch will control more than one circuit.

   d. Normally Open - NO; Normally Closed - NC.
      1. A NO switch would be like a doorbell switch.
      2. A NC switch would be like a stop button used in magnetic starter circuits.

<u>Application and Followup:</u>

Have the class make diagrams of the following types of switches; SPST, SDDT, DPST, DPDT, 3PST, and 3PDT.

# SINGLE POLE SINGLE THROW SWITCH (SPST)

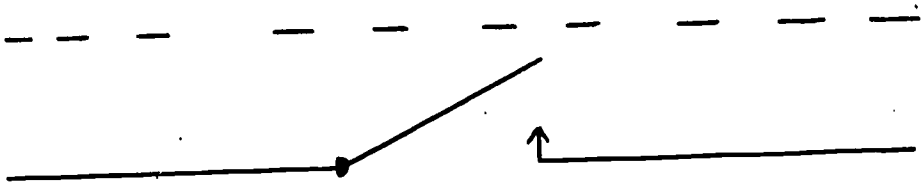

THIS SWITCH HAS ONLY TWO POSITIONS = <u>ON</u> AND <u>OFF</u> (SPST).

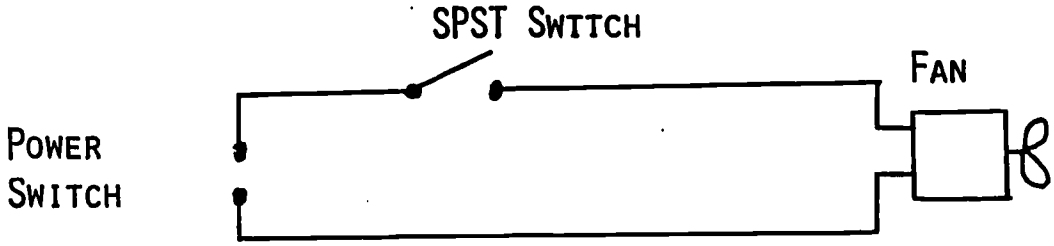

DOUBLE POLE SINGLE THROW SWITCH
(DPST)

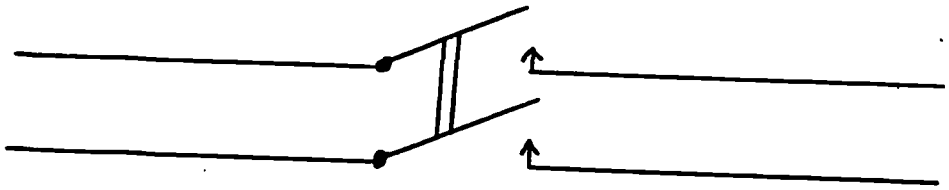

SINGLE POLE DOUBLE THROW SWITCH
(SPDT)

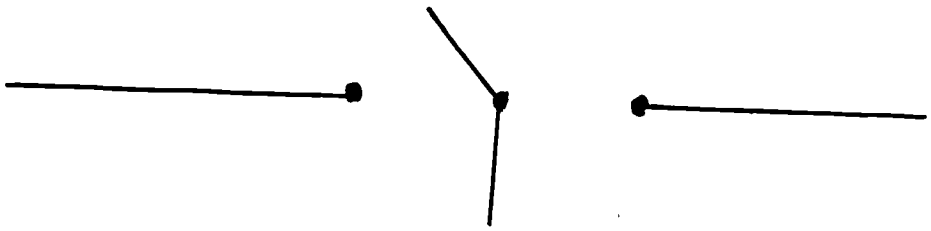

## THREE POLE SINGLE THROW SWITCH
## (3PST)

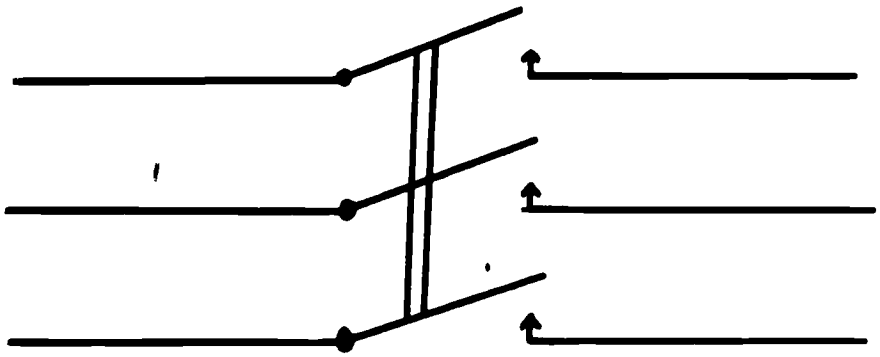

## THREE POLE DOUBLE THROW SWITCH
## (3PDT)

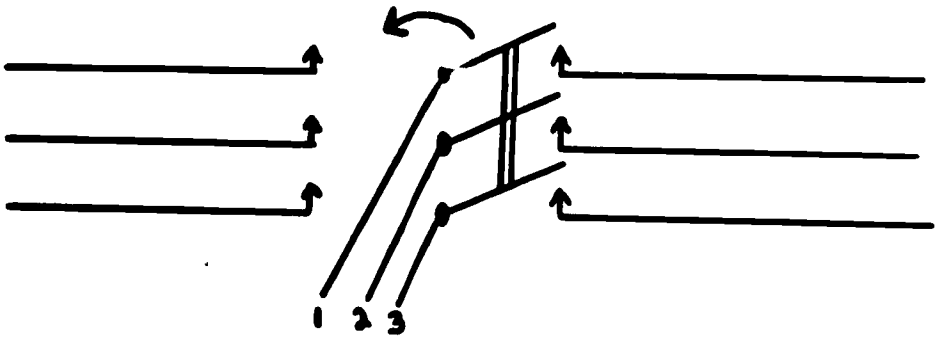

UNIT: Electrical Sensing Devices

Lesson 2: Using Switches to Control Electrical Equipment

Need:

Switches, although not thought of by most people as a sensing device, are extremely important in controlling circuits. Each different type serves a specific function under specified conditions. Our system will work efficiently only if we use the right switch at the right time.

References:

Fundamentals of Electricity for Agriculture, Gustafson
Suggestions for Teaching Electrical and Basic Controls Used in Agricultural Production

Objectives:

1. Given the actual switches, the students will be able to identify and describe the most common characteristics of each switch.

2. Given the classroom instruction, demonstration and student practice, the students will be able to:
   a. connect switches into a circuit.
   b. connect a limit switch into a circuit.
   c. demonstrate their ability to wire a 3-way and 4-way switch.

Interest Approach:

Before teaching the lesson, lay out a group of switches of different types for the students to attempt to identify. Follow this with a preliminary discussion on where they might be used.

| Key Questions, Problems and Concerns | Teaching Techniques and Information |
|---|---|
| 1. How are electric control switches classified? | a. Switches and complex controls are classified according to their actions.<br>1. The number of poles per switch.<br>a. Each movable contact point is called a pole.<br>b. A single-pole (SP) switch has one movable contact. |

2. The number of throws the switch has.
   a. Each stationary contact position is called a throw.
   b. A single-throw switch has only one position in which the poles make contact.

3. Whether the switch is normally open or normally closed.
   a. Used to designate the position of the switch.
   b. If the switch is activated to complete the circuit, it is designated normally open (NO).
   c. If the switch is activated to open the circuit, it is designated normally closed (NC).

2. Describe the characteristics of the different types of switches.

a. Switches may be single or complex. Have the students complete the chart on handout number one.
   Note: Provide each student with appropriate reference material and the blank worksheet. After they have been given time to complete the exercise, discuss their findings.

3. How does a mercury switch operate?

a. The mercury switch is opened and closed by liquid mercury in two closed tubes (OH 1).

   1. The contact points are inside the self-contained tube.

   2. By tilting the tube the switch is activated.

   3. A common application for the mercury switch is the light on an auto trunk.

4. A toggle may also be used to tilt the switch.

5. What is an overload protection device in a switch?

a. This type of switch protects. It is for small single-phase motor on heaters, strokers, refrigeration compressors, etc. (OH 2).

1. A snap action switch with a thermal overload device.

2. These types of switches often have a small light on the front to indicate the motor is running.

b. Several factors determine the type and size of overload protection.
1. Motor characteristics.
2. Type of starter.
3. Starter enclosure.

Application and Followup:

Use the two exercises taken from the Edison Elective Institute Manual and included as Exercise A and B of lesson.

## Exercise A

Using the tumbler or toggle switches:

1. Connect the switch so that you can control one motor (or a socket and light bulb) connected to 120 volts. Do you connect the grounded (neutral) wire into the switch or do you connect the ungrounded (hot) wire? Why?

2. Connect the switch and start and stop the motor several times.

   a. Does this switch provide short circuit and overload protection for the motor?

   b. How would you protect the motor against damage from overloads and short circuits when using this type switch as a motor control?

## Exercise B

Using the tumbler switch with built-in overload protector:

1. Remove the cover plate and than take out the overload protector, which also is called a "heater". What is the ampere rating of the heater?

   a. What would happen if more than the rated number of amperes went through the switch?

   b. What is the maximum size 120 volt motor for which this control is adequate?

   c. How do you select the proper size overload protector element?

2. Connect the switch for controlling one motor. The wiring diagram is shown above. You will only need to connect the two line wires and the two motor leads at the ends of the switch.

3. Start and stop the motor several times.

4. Lift out the overload protector element. Will the motor run now that you have removed the element? If you answer is no, explain why.

5. To demonstrate operation of overload protection, connect a heavy load or several motors (3) in parallel to this switch.

   a. How many amperes will flow through the switch when all 3 motors are running?

   b. What should happen to the circuit and flow of current?

   c. Did the overload protector open up and the motors stop?

   d. Snap the switch to "off" and let the heater element cool.

   e. Snap the switch to "on" and time the period necessary to cause the heater to open the circuit. What was the time?

6. How do you reset the overload protector?

   In actual practice, the connection of 3 motors through this one switch would not be done. The major advantage of a switch with overload protection is that the heater can be sized to protect one motor. If 3 motors were connected, the heater would have to be so large that none of the motors would receive adequate overload protection. Three motors are connected in this exercise only to show that the total amperes will cause the switch to open.

## ELECTRICAL SWITCHES

| Name | Advantage | Disadvantage |
|---|---|---|
| Toggle switch. | 1. Simple design.<br>2. Inexpensive.<br>3. Readily available. | 1. May not be attractive.<br>2. Many are noisy.<br>3. There are mechanical parts to ware out. |
| Push Button (non-toggle) | 1. Helpful when current must be turned on or off momentarily. | 1. Switch must be held in position. |
| Time Delay | 1. Light will remain on a short time after the switch is turned off.<br>2. Good. | 1. More expensive |
| Dimmer Switch | 1. Turns the lamp on at any level of intensity. | 1. Cost is greater. |
| Knife switch | 1. Appropriate for heavy current loads. | |
| Mercury Switch | 1. Very quiet. | 1. More expensive. |

# OVERLOAD PROTECTION

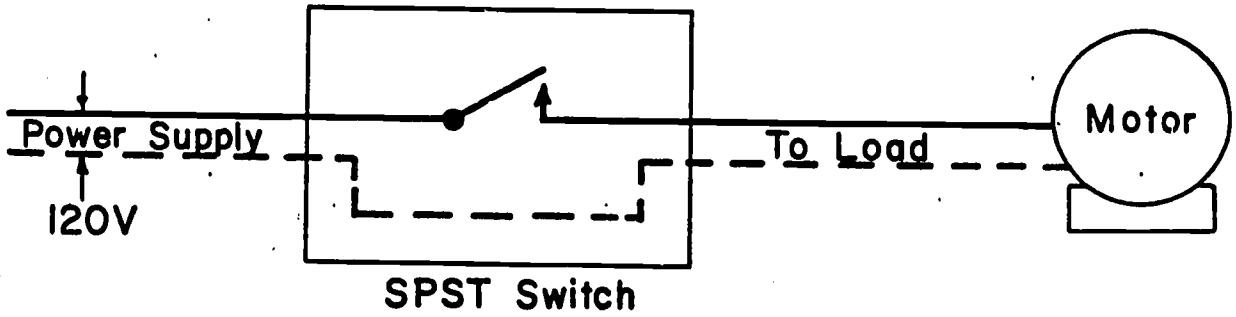


WITHOUT OVERLOAD PROTECTION

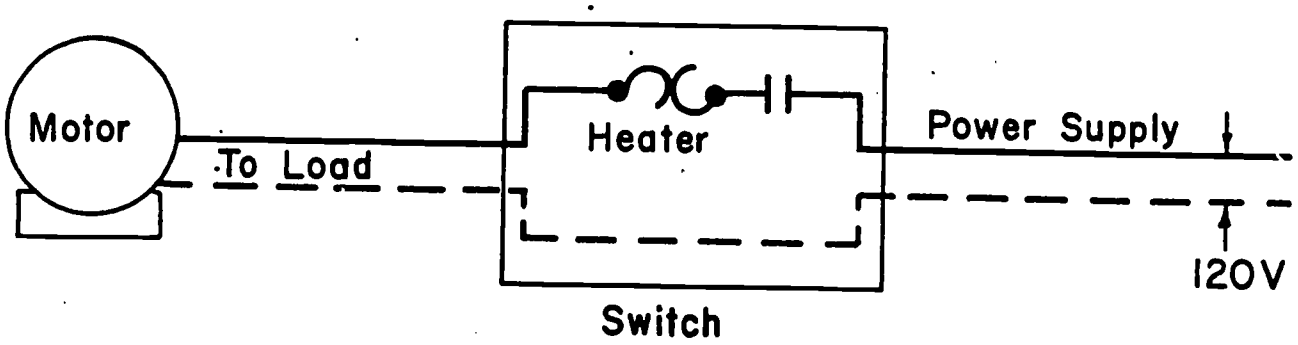


WITH OVERLOAD PROTECTION

# HOW A MERCURY SWITCH OPERATES

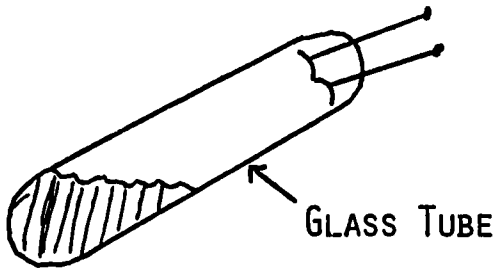


OFF POSITION

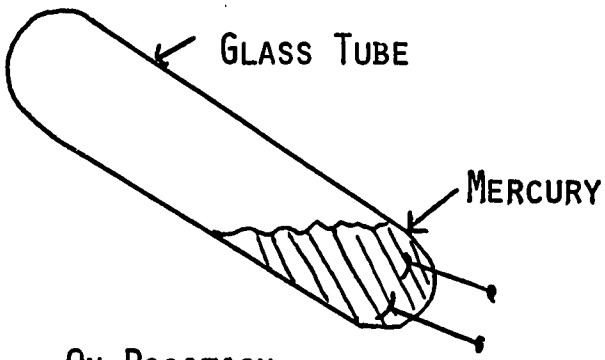


ON POSITION

# ELECTRIC SWITCHES

UNIT: Electrical Sensing Devices

Lesson 3: Using Relay Devices in the Electrical Circuit

Need:

Relay became useful because a small current in the control circuit can control a relatively large current in the load circuit. This has a distinct advantage when working with large pieces of electrical equipment. Understanding the use of relay devices will mean money in the business person's pocket.

References:

Fundamentals of Electricity for Agriculture, Gustafson
Suggestions for Teaching Electrical and Basic Controls Used in Agricultural Production

Objectives:

Given a time delay relay and the necessary equipment, the students will be able to properly connect the relay into the light and motor control circuit.

Interest Approach:

Tour the shop or school facility with the students and identify the relay devices that are being used. Discuss briefly why they are being used.

| Key Questions, Problems and Concerns | Teaching Techniques and Information |
|---|---|
| 1. What is a relay device? | a. An electrical device to control a circuit carrying a large current by means of a low-current circuit. Example: photoelectric cell. |
| 2. What are the advantages of using a relay device? | a. The relay has some distinct advantages over the mechanical switch.<br>1. Wires on the control circuit can be smaller.<br>2. Therefore, it is less expensive.<br>3. Switches can be placed great distances from the load. |

4. Heavy currents are not passed through the control circuits which improves the life of the switches and safety of operation.

5. Will reduce the number of large loads starting simultaneously.

6. They can be used to sequence certain loads.

3. Study the components of a relay switch.

a. The basic parts of a relay are:

1. Solenoid or electromagnet.
   a. Made up of a coil and a movable armature or iron core, and,
   b. a set of contact points.

2. The relay has two electronic circuits.
   a. The control circuit. (Usually the low voltage circuit.)
   b. The load circuit. (Has the contact points attached.)

Note: Use OH 1 to discuss the parts of the relay.

4. How does the relay work? Use both the overlay and an actual relay.

a. Trace the flow of current through the relay. OH 2

1. Observe the small coil with many turns.

2. As a small amount of electrical current flows into the coil, an electromagnet is produced.

3. This magnet pulls the points closed.

4. The main current then begins to flow within the circuit to operate the electrical equipment.

5. Study a relay.

a. Provide the students with one or more examples of relays. Have them respond to the following questions.

   1. What is the ampere rating?

   2. What is the voltage rating?
      a. Voltage of coil.
      b. Voltage of relay load circuits.

   3. What is the largest size load that can be controlled?
      a. Load in watts or kilowatts.
      b. Size of motor.

   4. Determine the number of poles or contacts on the relay.
      a. Is it a normally open or normally closed relay?

<u>Application and Followup:</u>

Have the students complete the time delay relay exercise. The exercise is taken from the material entitled "Suggestions for Teaching Electrical and Basic Controls Used in Agricultural Production".

WORKSHEET NO. 1

Time Delay

Examine the 115 N/O 10 time delay relay. This type used in this exercise has the physical appearance of a radio or TV tub. The 115 in the type designation 115 N/O 10 means that the heater element in the relay is designated for 115 volts. The N/O means that the relay contacts are normally open. The 10 means that the contact points will close 10 seconds after the heater is energized. When the heater is energized with a flow current, a 10 second period is required before the heat will cause the metal plate to bend and thus close the contacts. This closes the switch. Locate the two contact points. Are they together or are they apart?

1. Application in control circuits:

   a. Examine the 115 N/O 10 time delay relay. The type used in this exercise has the physical appearance of a radio or TV tube. The 115 in the type designation 115 N/O means that the heater element in the relay is designed for 115 volts. The N/O means that the relay contacts are normally open. The 10 means that the contact points will close 10 seconds after the heater is energized. When the heater is energized with a flow of current, a 10 second period is required before the heat will cause the metal plate to bend and thus close the contacts. This closes the switch. Locate the two contact points. Are they together or are they apart?

   b. Perform the following work:

      1. Connect the 115 N/O 10 time delay relay by following the diagram on the next page. Note that the switch within the relay is in series with the light bulb, therefore the full ampere flow goes through the switch. The contact points are rated at 3 amps. What is the maximum size bulb that can be used directly with this relay?

      2. Energize the circuit. Does the bulb come on immediately? Wait a few seconds. Does the bulb go on or off?

      3. De-energize the circuit. Does the bulb go on or off immediately? Why? Wait 10 seconds or so and repeat step 2.

      4. The contact points are rated at 3 amperes. Can you connect this time delay relay directly to a 1/4 HP motor?

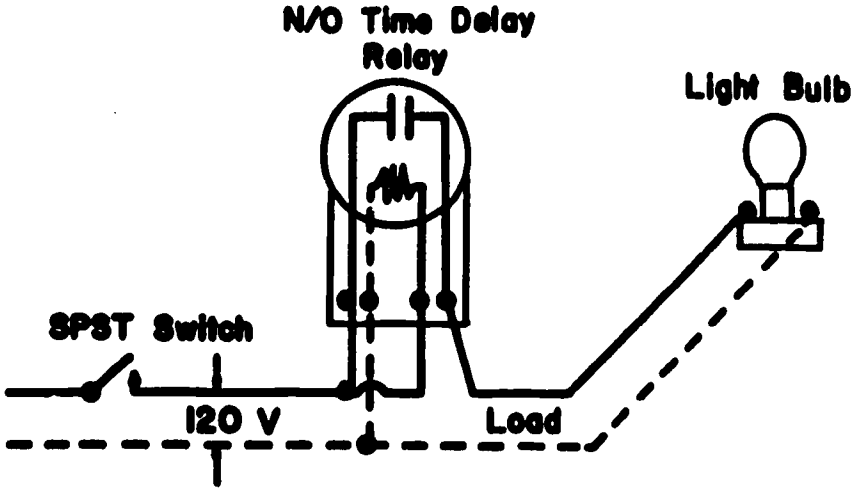
N/O Time Delay
Relay
Light Bulb
SPST Switch
120 V
Load

WORKSHEET NO. 2

Time Delay

Read the following explanation and perform the work described:

1. Because a 1/4 HP or larger motor requires a greater current than the 3 ampere rating of the contact points of the time delay relay, an additional relay (magnetic starter) must be used with such a motor. The time delay relay then connects only to the coil of the additional relay and the motor connection is made through the additional relay contacts.

2. Connect the motor to the 115 N/O 10 time delay relay by following the diagram below.

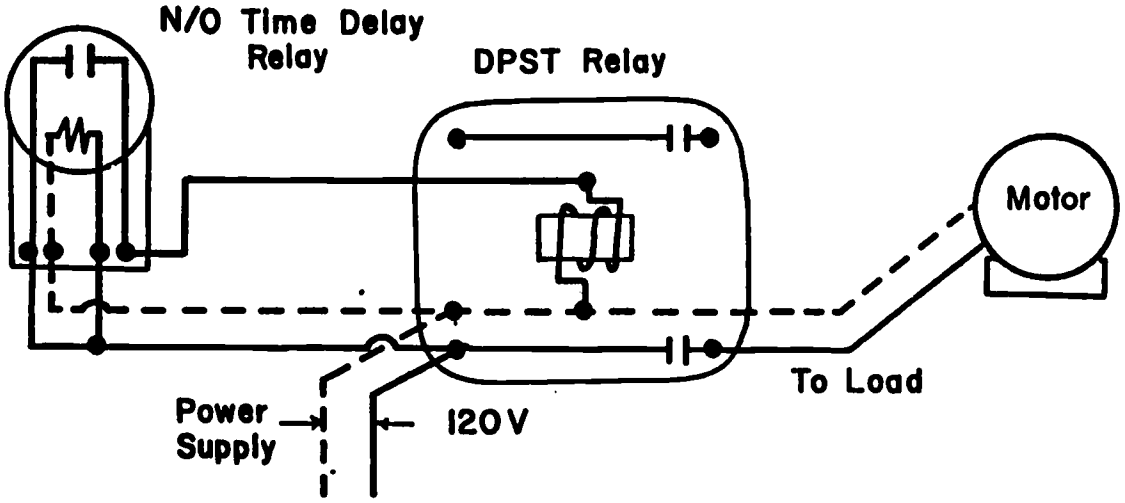


3. Energize the circuit. Does the motor come on immediately? Wait about 10 seconds, does the motor then come on? Explain the action that occurs. De-energize the circuit. Time the delay in motor action.

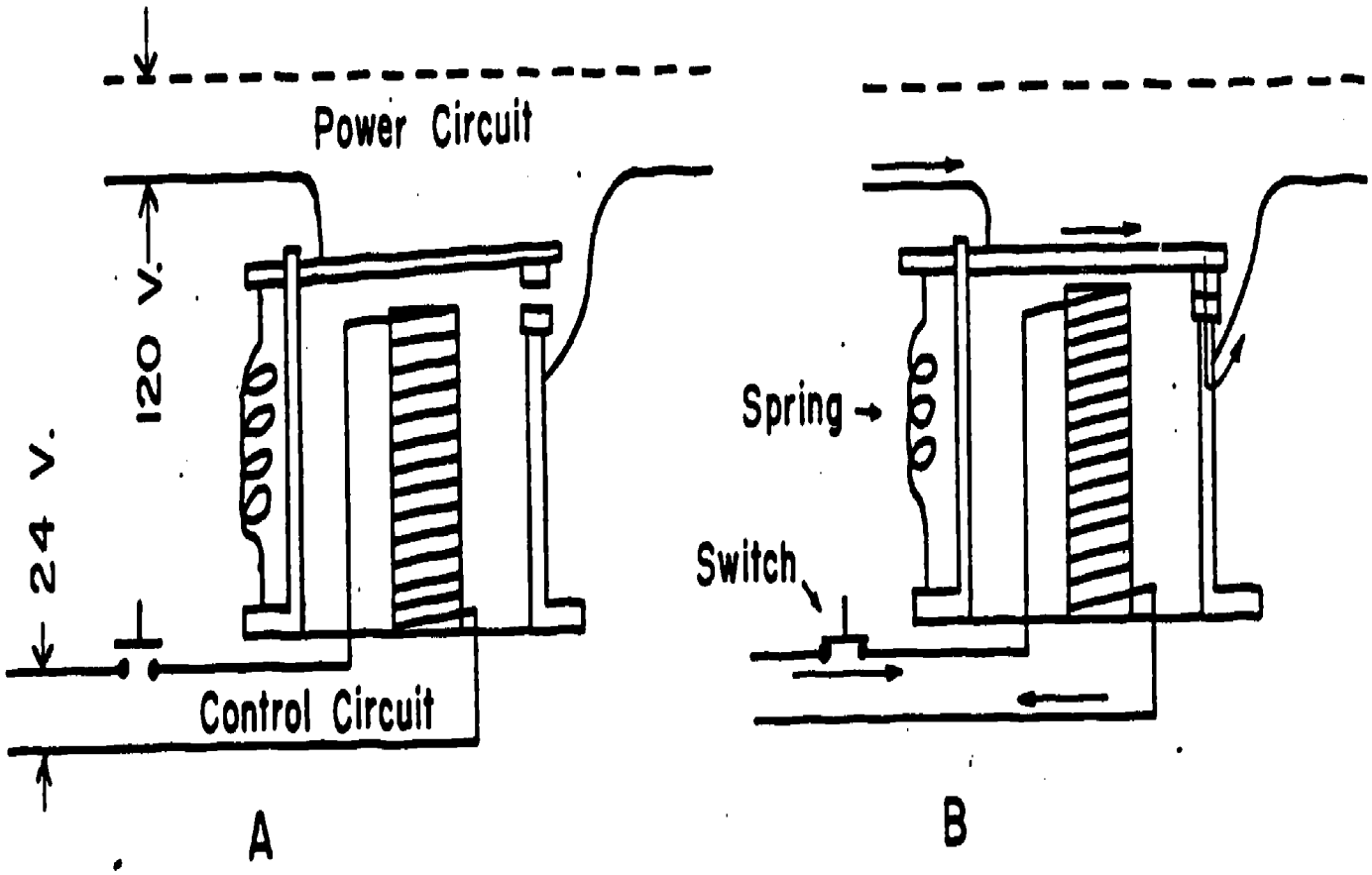
Power Circuit
120 V.
24 V.
Control Circuit
A
Spring
Switch
B

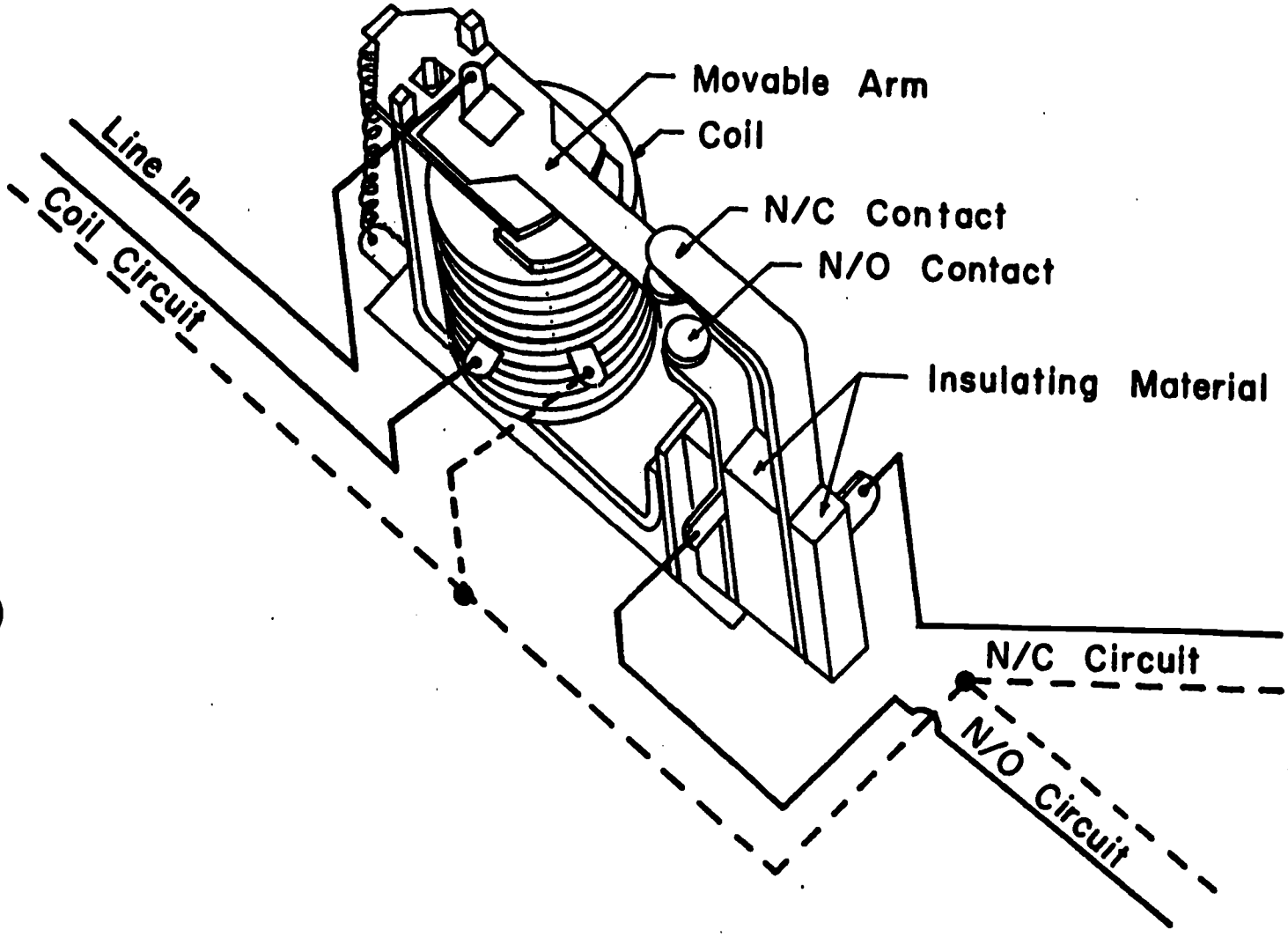


SCHEMATIC SKETCH OF SPDT RELAY

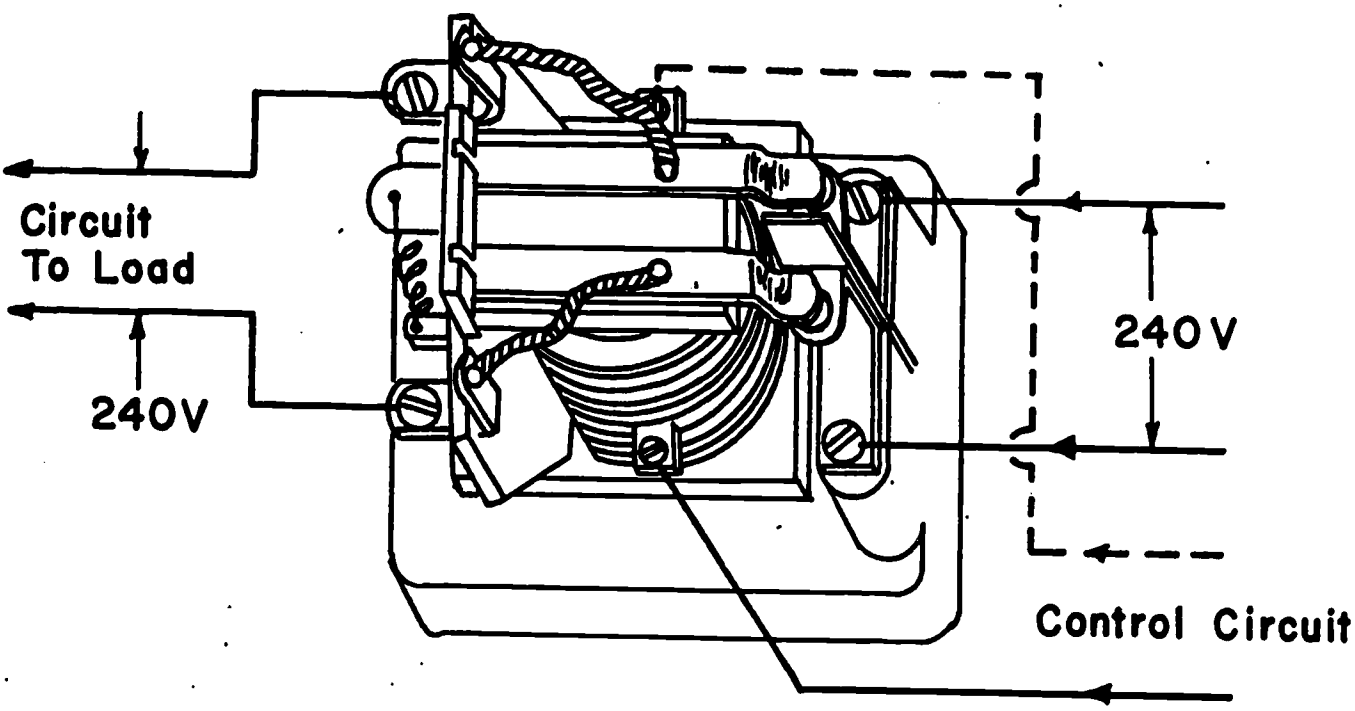


SCHEMATIC SKETCH OF DPST RELAY

UNIT: Electrical Sensing Devices

Lesson 4: Using Magnetic or Automatic Electric Motor Control Devices

Need:

A person need not be at the motor location in order to turn on the machine. The irrigation motor in the south 80 acres can be turned on from the farmstead. On the other hand, we may want to turn on a fan in the farrowing shed when the humidity gets too high or we may want to turn on the stock water pump at certain times during the day. If so, we need to understand how to include an automatic control device into the system.

References:

Fundamentals of Electricity for Agriculture, Gustafson
Electric Motors, Principles, Controls, Service and Maintenance, Bear & Horner
Suggestions for Teaching Electrical and Basic Controls Used in Agriculture, Edison

Objectives:

Given class discussion, individual study, teacher demonstration and student application, the students will be able to:

a. Describe where and when the electric motor controls can be utilized.

b. Describe the purpose and components of the various electric motor control devices.

c. Wire sensing control devices into motor control circuits.

Interest Approach:

Construct a single electronic magnet using electrical wire and some type of soft metal core. Compare the way it functions with the old style permanent magnet.

| Key Questions, Problems and Concerns | Teaching Techniques and Information |
|---|---|
| 1. What is an electro-magnetic switch. | a. A switch in which an electro-magnetic is used to open and close a circuit. |

2. What are the advantages of an electromagnetic switch.

a. There are three (3) distinct advantages when using the larger horse power motors.

1. The electromagnetic creates a fast "make" and "break" circuit.

a. This will reduce start up arcing problems caused by high starting amperes.

b. A spring is used to create a rapid break.

2. The electromagnet switch lends itself to remote control.

a. Its use can result in more convenience and safety.

b. Discuss some examples of application that will apply to both convenience and safety.

3. It provides an opportunity for a user to obtain precision overload and overcurrent protection.

a. This will help protect the motors.

b. Using the proper heater element will save money.

3. How does an electromagnetic switch work?

a. The electromagnet is the heart of the switch. (OH 1)

1. Current flows through coil causing the iron core to become magnetized.

2. Once magnetized, it attracts the contact point immediately under it.

3. Once the electromagnet is de-energized, a spring helps separate the points quickly.

Note: A typical automotive or tractor cranking motor operates the same way.

4. What features are included with a standard magnetic motor controller.

a. The major components include:

1. Magnetic contractor: Includes a coil, movable core and control circuit.
   a. The contacts are rated in volts, amperes, and horsepower.
   b. The control circuit may be the same as a lower voltage.

2. Overload device:
   a. Sized according to the motor or load it controls.
   b. If an overload occurs it will open a contact.
   c. The overload must be reset before the motor will start again.

5. Examine a magnetic starting device.

a. Have the students examine a magnetic device carefully and answer the following questions.

1. Identify the following:
   a. Contact terminals
   b. Coil magnet assembly
   c. Overload relay
   d. Relay heater
   e. Reset mechanism

2. Is it a single pole, double pole or three-pole switch?

3. After studying the name plate on the magnet assembly determine:
   a. What is the maximum size motor when connected to 120 volts?

b. What is the maximum size motor? When connected to the 240 volts?
c. Does the switch have an overload protector? Where is it? Is it adjustable?
d. How do you select the proper size heater unit for use in the protector?

6. Examine a pushbutton motor control.

a. This control device, when used with a magnetic controller, is the most common type used for starting and stoping electric motors. The pushbutton control cannot be used as a switch by itself, but requires other equipment such as a motor starter as a relay device. Examine a pushbutton motor control and answer the following questions.

1. What is the current rating and why is it so low?

2. Push the start button. Do the contact points open or do they close? Is the start button NO or is it NC?

3. Push the stop button. Do the contact points open or do they close? Is the stop button NO or is it NC?

4. What is the maximum voltage on which this pushbutton may operate?

5. Is it suitable for the voltages you have at home?

6. What voltages do you have at home?

7. The start side of the station has two terminals and the stop side also has two terminals. Only three wires, however, are brought outside. Why aren't there four wires brought outside?

Note: Discuss the student's responses.

Application and Followup:

The application exercise suggested for this lesson is taken from page 37-38 of the reference entitled, "Suggestions for Teaching Electrical and Basic Controls Used in Agricultural Production". Study the exercise carefully before class to make certain you have all of the equipment.

MOTOR CONTROL WORKSHEET

1. Study the diagram below and make the connections as shown. Use the magnetic starter and one start-stop station.

   a. Energize the circuit and push the START button. Does the motor start and run? Did the magnet assembly move? Release the START button. Does the motor continue running?

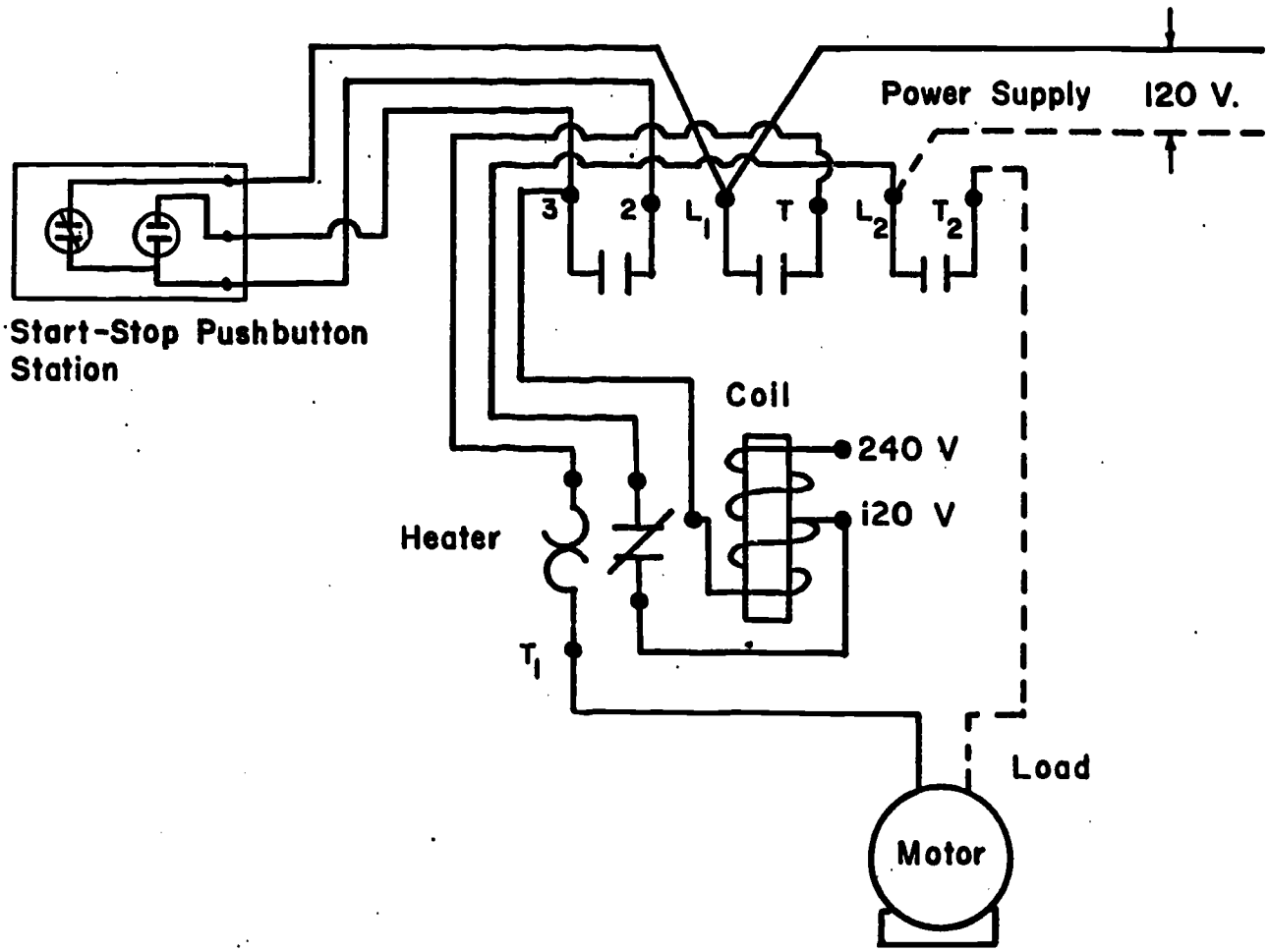


When the start button is pressed, current may flow from $L_1$ through the stop button which is N/C, on through the start button, on through 3 to the magnetic coil. When the coil is energized, the 3 switches within the magnetic starter close and the current may flow from $L_1$ to $T_1$ to the motor. The neutral goes from $L_2$ through the closed switch to $T_2$, and then to the motor. To stop the motor, the coil needs to be de-energized. Pressing the stop button will open the circuit to the coil. The 3 switches within the magnetic starter open and the motor will stop.

b. Push the STOP button. Did the magnet assembly move? Did the motor stop?

c. Start and stop the motor several times and notice the action of the magnetic starter.

2. Connect 2 start-stop stations to the magnetic starter and control the motor from each station.

a. Follow the diagram below to make the connections. Start and stop the motor several times.

b. Does the current to the motor flow through the start-stop stations? If not, what current flow does flow through the stations?

c. How does this current flow characteristic simplify the wiring requirements?

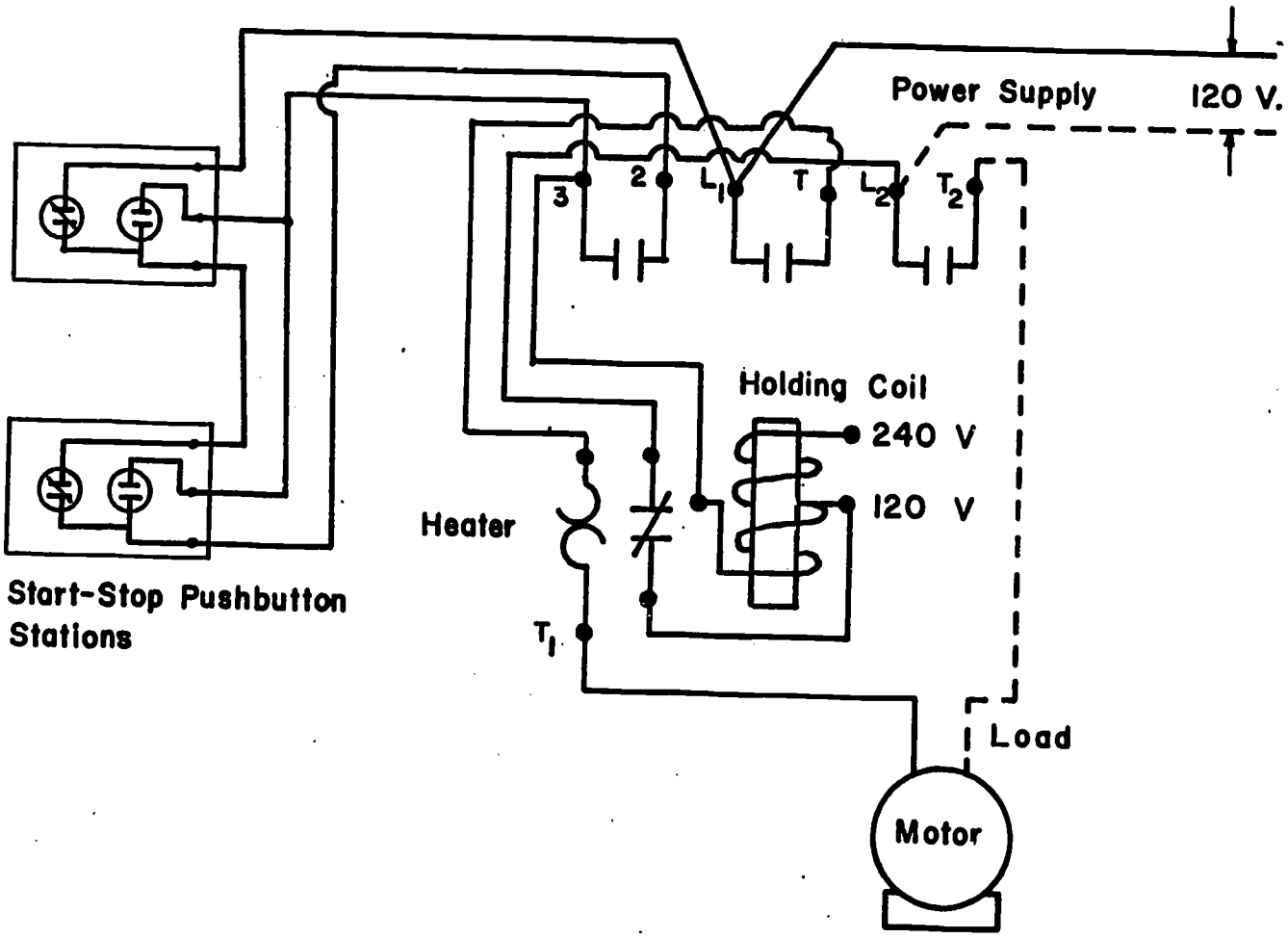


d. Would the above control mechanism protect the motor if it became overloaded? How?

# The Operation of the Electromagnetic Motor Starter

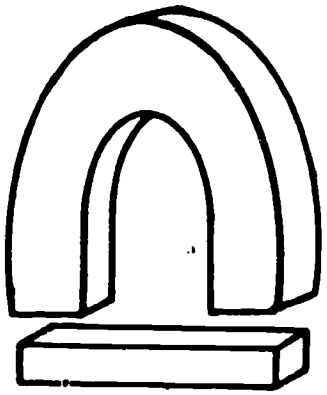

Permanent-Type Magnet

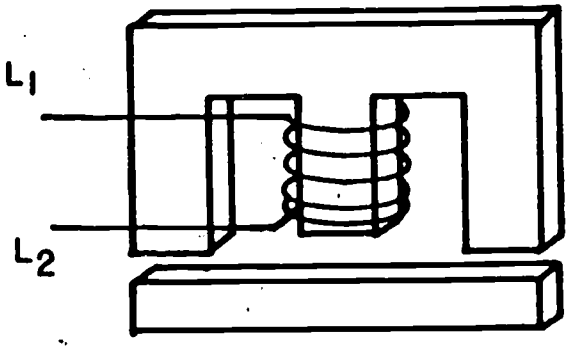


Electromagnet

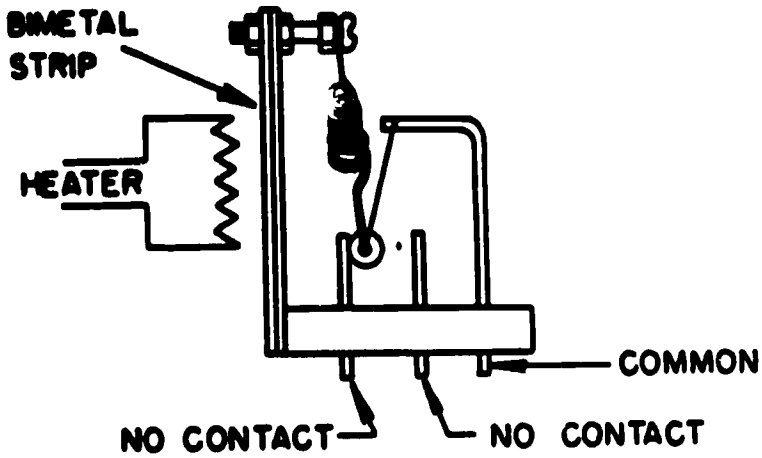


BEFORE HEATING

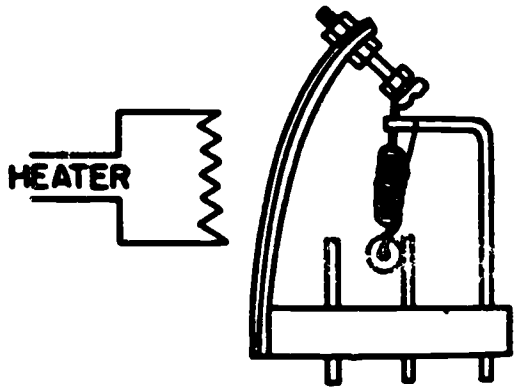


AFTER HEATING

UNIT: Electrical Sensing Devices

Lesson 5: Using Automatic Sensing Control Devices

Need:

When appropriate, temperature, humidity, pressure, motion, light and time can be used to control the operation of electrical equipment. The temperature drops so we would like the heater in the shop to come on or we want the fan in the dairy barn to come on automatically when the humidity reaches a certain level. We could even use a timer to turn on the coffee pot. All of this can be done if one understands how to include the sensing devices in the circuit.

References:

Fundamentals of Electricity for Agriculture, Gustafson
Suggestions for Teaching Electricity and Basic Controls Used in Agricultural Producation

Objectives:

Given discussion, individual study, teacher demonstration and student application, the students will be able to:

a. Describe where the various sensing devices can be used.

b. Describe the purpose and components of the various sensing devices.

c. Wire sensing control devices into control circuits.

Interest Approach:

Show a photocell to the class. Discuss with them how it works and where it it is used commercially.

| Key Questions, Problems and Concerns | Teaching Techniques and Information |
|---|---|
| 1. What are the most commonly used sensing control devices? | a. The sensing device is usually named after the variable that is used to activate the device.<br><br>1. Thermostats: Controlled by air temperature.<br><br>2. Humidistats: Controlled by changes in moisture or humidity. |

4. Photocell: Controlled by light intensity.

2. What are some characteristics of some sensing devices?

a. The devices are capable of sensing a change.

1. Each device is sensitive to a specific condition (variable).

2. As the device reacts to change, it mechanically actuates an electric contact or switch.

3. The device is set to react to a specific condition within a range of sensitivity.

4. They may operate on live voltage or on low voltage circuits.

5. The devices are rated in both volts and amperes.

3. Identify the manner in which thermostats operate.

a. Thermostats operate on three (3) basic principles. When a thermostat is purchased, it is set to operate at pre-set temperature ranges.

1. Bimetallic thermostat (OH 1).
   a. Different metals expand and control at different rates when the temperature changes.
   b. Two dissimilar metals are bonded together.
   c. As the temperature changes, the bimetallic bends to open or close the contact points.

2. Liquid-gas thermostat.
   a. Consists of a liquid filled wafer or bellows mechanically connected to an electrical contact mechanism.

b. A temperative change causes the gas to expand or contract, thus opening or closing the contact points.

3. Hydraulic thermostat (OH 1)
   a. Consists of a liquid filled tube mechanically connected to an electrical contact.
   b. As the temperature changes, the liquid expands or contracts closing or opening the switch points.

4. Thermostats are classified according to usage.

a. Heating thermostats.
   1. Used to control heating equipment.
   2. The contact points close as the temperature cools.
   3. When temperature rises above a pre-set value, the contact points automatically open.

b. Cooling thermostats.
   1. Used for fans or other cooling equipment.
   2. The contact points close as the temperature raises.
   3. When the temperature gets back to the desired level, the points open and deenergize the system.

5. Examine a thermostat.

a. Provide a thermostat to each student or group of students. Provide them with a copy of

   Worksheet 1. Have them complete the worksheet by answering the following questions.

   1. What is the differences between a thermometer and a thermostat.

2. Locate the following parts of the thermostat.
   a. Nameplate label.
   b. Switch.
   c. Temperature scale plate.
   d. Temperature adjustment knob.
   e. Temperature sensing element.

3. Does the electricity connect to anything other than the switch?

4. What voltage may be applied to this switch.

5. What is the full load ampere ratings of this switch.

6. What is the range of temperature adjustments?

7. What is the differential in degrees F?

6. Examine a humidity controller.

a. These devices are commonly called humidistats. They may use human hair or other material which responds to changes in humidity. The sensing element is connected to the contact points.

7. Examine a humidistat.

a. Provide a humidistat to a student or group of students. Provide them with a copy of Worksheet 2. Have them answer the following questions. (OH 2)

   1. What is the humidity range of this controller?

   2. What is the voltage rating of the switch?

   3. How many full load amperes may be connected directly through the switch.

4. Locate the sensing element. What is it made of? DON'T TOUCH THE SENSING ELEMENT! Explain how humidity affects the sensing element.

5. Notice the two (2) wires connected to the switch. Is one neutral? Is the switch installed in the current-carrying (hot) conductor or the neutral?

8. Examine a timing control device.

a. These devices are commonly called time clocks or time switches. They usually consist of an electric clock mechanically connected to a set of points. The points automatically open and close at definite time intervals.

9. Study a timer very carefully.

a. Provide a 24-hour timer to each student or one for a group of students. Have the students answer the following questions. Provide each student with a copy of Worksheet No. 3.

1. What is the "rating" of this time clock?

2. How many amperes may be connected to the load circuit of the switch?

3. How do you set the dial for the correct time of day? How many control operations can be performed in a 24-hour period?

4. Locate the terminal strip. Refer to the wiring diagram inside the front cover of the case and then identify the following.

a. The numbered terminal where the ungrounded (hot) line and load wires would be connected.

b. The numbered terminals where the grounded (neutral) line and load wires would be connected.

10. What are the characteristics of the photo electric cell?

a. The photocell is generally used for lighting applications.

1. Street lights can be automatically turned on and off.

2. A farmstead light could be activated by a photocell.

3. Electric operated garage doors use a photocell.

11. Examine a photocell.

a. Provide a photo cell for each student or groups of students. Provide each student a copy of Worksheet No. 4. Have them answer the following questions.

1. What is the voltage rating of the unit?

2. How many watts can be connected directly to the unit.

3. Locate the glass lence opening. What do you suppose is the purpose of the louver inside the lens?

4. Is the red colored wire used for connecting line-in wire or for the load wire?

<u>Application and Followup:</u>

A series of problems have been taken from the texts that will allow the students to utilize the knowledge gained throughout the lessons.

# THERMOSTAT WORKSHEET

Study and examine the thermostat very carefully and then answer the following questions. After you have answered the questions, your instructor will discuss the answers with you.

1. What is the difference between a thermometer and a thermostat?

2. Locate the following parts of the thermostat?

   a. Nameplate label.
   b. Switch.
   c. Temperature scale plate.
   d. Temperature adjustment knob.
   e. Temperature sensing element.

3. Does the electricity connect to anything other than the switch?

4. What voltage may be applied to this switch?

5. What is the full load ampere rating of this switch?

6. What is the range of temperature adjustments?

7. What is the differential in degrees F?

# WORKSHEET ON THE HUMIDISTAT

Study and examine the humidistat very carefully and then answer the following questions. After you have answered the questions, your instructor will discuss the answers with you.

1. What is the humidity range of this controller?

2. What is the voltage rating of the switch?

3. How many full load amperes may be connected directly through the switch?

4. Locate the sensing element. What is it made of? DON'T TOUCH THE SENSING ELEMENT. Explain how humidity affects the sensing element.

5. Notice the two wires connected to the switch. Is one neutral? Is the switch installed in the current-carrying (hot) conductor or the neutral?

# WORKSHEET ON THE TIMER CONTROL

Study and examine the timer device very carefully and then answer the following questions. After you have answered the questions, your instructor will discuss the answers with you.

1. What is the "rating" of this time clock?

2. How many amperes may be connected to the load circuit of the switch?

3. How do you set the dial for the correct time of day? How many control operations can be performed in a 24-hour period?

4. Locate the terminal strip. Refer to the wiring diagram inside the front cover of the case and then identify the following:

   a. The numbered terminal where the ungrounded (hot) line and load wires would be connected.

   b. The numbered terminals where the grounded (neutral) line and load wires would be connected.

# WORKSHEET ON THE PHOTOCELL

Study and examine the photocell very carefully and then answer the following questions. After you have answered the questions, your instructor will discuss the answers with you.

1. What is the voltage rating of the unit?

2. How many watts can be connected directly to the unit?

3. Locate the glass lence opening. What do you suppose is the purpose of the louver inside the lens?

4. Is the road colored wire used for connecting line-in wire or for the load wire?

# TYPES OF THERMOSTATS

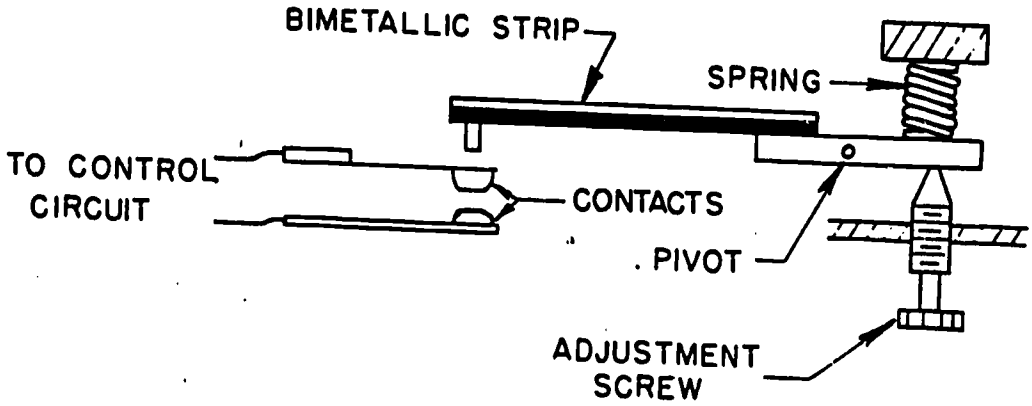


BIMETALLIC THERMOSTAT

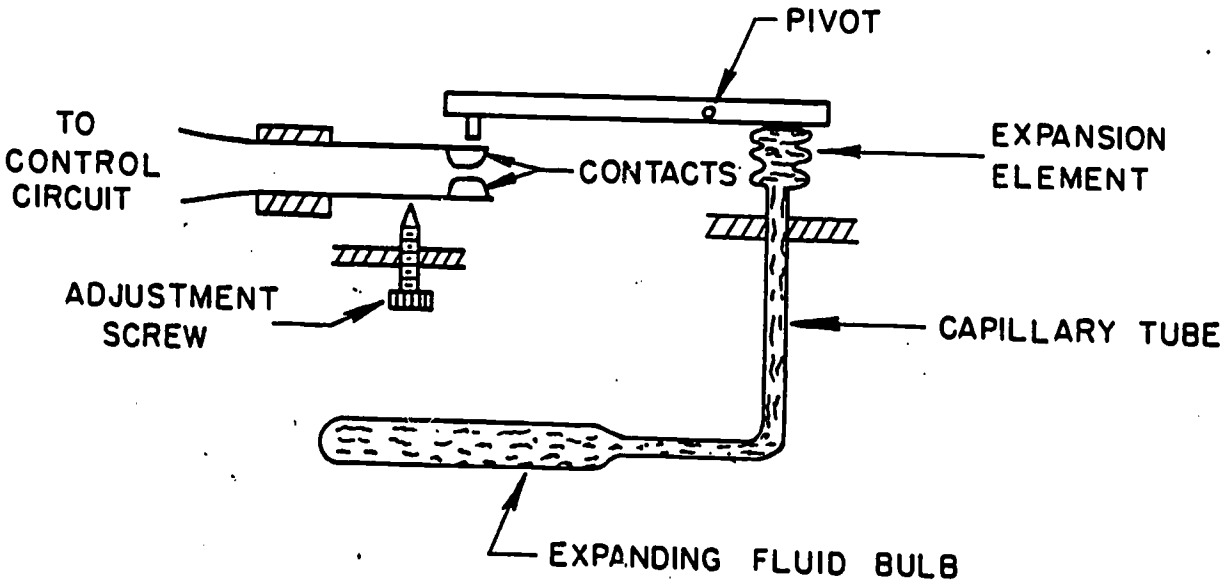


HYDRAULIC THERMOSTAT

# A HUMIDISTAT