The Journal of Technology Studies

Plot Scale Factor Models for Standard Orthographic Views

Edward E. Osakue

Abstract

Geometric modeling provides graphic representations of real or abstract objects. Realistic representation requires three dimensional (3D) attributes since natural objects have three principal dimensions. CAD software gives the user the ability to construct realistic 3D models of objects, but often prints of these models must be generated on two dimensional (2D) standard-sized sheets. The transformation of 3D objects into 2D representations on standard-sized sheets requires one to use a proportional relationship called a scale, which is defined by a scale factor (*SF*).

Two mathematical models for a scale factor, one for reduction scaling and the other for enlargement scaling, are presented for standard orthographic views. The models are based on the sizes of standard drawing sheets and the principal dimensions of the object. The application of the models is demonstrated with two illustrative examples, one for reduction scaling and another for enlargement scaling. The scale factors selected on the basis of the models were used to prepare detail drawings for the examples. In each case, the scale factor appeared satisfactory.

It is shown that the models are tolerant of error in the only parameter that is assumed when applying them, suggesting that they are robust. This robust feature is an advantage, because in real design drafting situations, one must often make assumptions about sizes. The models can thus accommodate some erroneous assumptions.

Introduction

In a drawing context, scale refers to the proportional relationship between an image size on a drawing media (or plot size) and the design size. A design size may be the intended size of an object in a design project or the actual size of a manufactured object. A proportion is expressed as a ratio, and a drawing scale factor (Duggai, 2000; Madsen et al., 2002) is the ratio of proportion between a design size and the plot size. The plot size is the actual size of an image on a standard drawing sheet at printing or plotting time. A scale factor will depend on the design size, the level of detail information associated with the drawing views, and the sheet size chosen for plotting the drawing (Madsen et al., 2002). In design drafting, a plot scale is specified by indicating the scale factor value. The scale factor value is chosen as an integer that is greater or equal to unity. At full size, the plot size is equal to the design size and *SF* is 1.

CAD software can be used to design, visualize, and document product ideas clearly and efficiently (Shih, 2004; Shih, 2006). The work environments generally available in CAD software are known as model space and paper space (Madsen et al., 2002; Shih, 2004; Shih, 2006). CAD model space is a 3D environment with a three-dimensional (X-Y-Z) coordinate system. It is used to construct 2D and 3D graphic models of designs. Solid 3D models are the most realistic, and the applications can be used in design, visualization, analysis, manufacturing, assembly, and marketing (Bertoline & Wiebe, 2003). The 2D model space has a two-dimensional coordinate system. It is obtained from the 3D space by grounding one axis of the 3D model space. In CAD model space, objects are constructed at full size (Duggai, 2000; Madsen et al., 2002; Shih, 2004; Shih, 2006), thus, in this case, choosing a scale is not required. In board drafting, a scale is chosen before the drawing work is started because of the physical restriction imposed by standard drawing sheet. This physical restriction does not exsist in the electronic or virtual space in CAD software. As a result, solid object in model space can be viewed from different points in space. This makes it possible to generate any desired view of the solid object in either 3D or 2D representations.

CAD paper space is limited to a 2D coordinate system. This is an electronic planar surface where 3D models can be transformed into equivalent 2D representations using projection techniques. A 2D view of a 3D model can be either a pictorial view or an orthographic view, and one can generate as many views as desired of the model object by changing the viewing direction. When the model space object is modified, the view in paper space can be updated. These 2D views can be annotated with dimen-

sions and notes on electronic standard sheets, which are the equivalent of physical standard sheets. A scale factor is selected in CAD paper space when the views of a model are being placed on a chosen electronic standard sheet. A suitable scale factor will make any design graphic model fit into a selected drawing sheet.

This article is concerned only with standard orthographic view scaling. Orthographic views are used extensively in detail drawings, which are required for nonstandard parts in an assembly. Detail drawings can be prepared from sketches or generated from 3D CAD models. Orthographic views also are used in outline and layout sketches and drawings. In complex drawings, standard orthographic views may be supplemented with auxiliary views and section views. Though standard orthographic drawings show three views, often an isometric insert is added when 3D models are available.

Because standard sheets have fixed sizes, design graphic models must be scaled to fit into them at plotting or printing time. The selection of a plot scale factor is therefore one of the important skills design drafters must acquire (Madsen et al., 2002). In practice, selecting a scale factor is done largely by trial and error. Computers have made the selection process easier and faster, but the trial-and-error approach still persists. This seems largely due to the absence of a mathematical model to select the scale factor.

The objective of this article is to develop a mathematical model for a plot scale factor for standard orthographic or multiview drawings. Using a model to select a scale factor brings order to the selection process. Also, a mathematical model can help one to understand the nature and applications of scale factors in design drafting. In addition to these benefits, a mathematical model for plot scale factor can be a great teaching tool for training design drafters, architects, and engineers; it also can be a vital planning aid in design drafting practice.

Model Formulation

Projection techniques are used to create 2D images of 3D objects. In U.S. Standard or third-angle projection, the standard multiview drawings require three views of top, front and right side. Consider Figure 1a, which shows a 3D model with a box defining its volume requirement. This box is known as the bounding box (B-box). When one plots or prints the model in multiview, the projected size of the B-box to a 2D space must be accommodated by the space available on the chosen standard sheet when the scale factor is applied. Therefore, the B-box dimensions completely determine the views space requirement. This is important because there is no need to worry about the complexity of the form or shape of a component in evaluating the views space requirement. In Figure 1a, the principal dimensions (*W, H and D*) of the object are indicated. These are the limits of dimensions measured along the coordinate axes of the full size object in 3D model space.

Let:

W_O = full size width of views space requirement

H_O = full size height of views space requirement

Figure 1 Multiview layout and principal dimensions

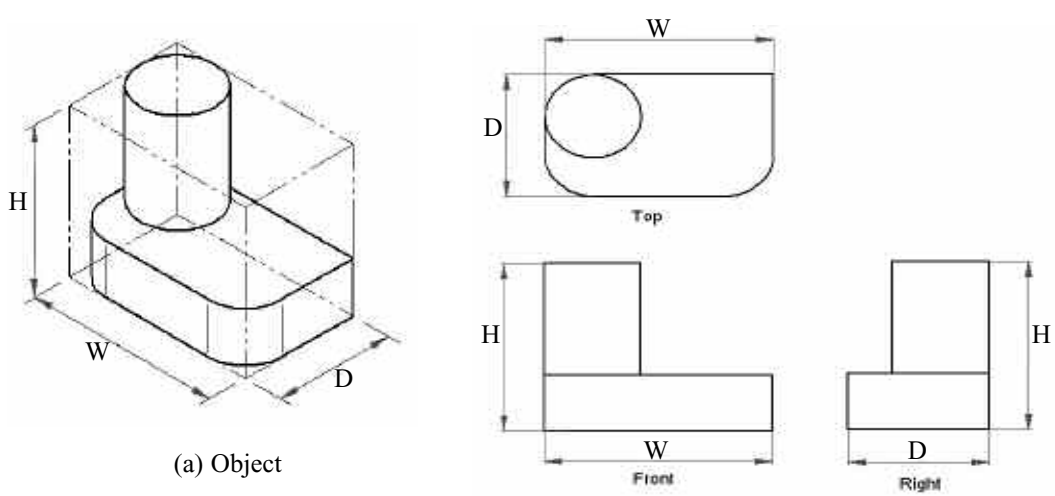

(a) Object

(b) Layout of standard orthographic views

From Figure 1b, neglecting the gaps between the views, the views space dimensions are:

$W_o = W + D$ (1)

$H_o = H + D$ (2)

If a 2D model is constructed instead of a 3D model, then W_o and H_o should be measured directly from the model space.

The technical space requirement consists of the space for drawing views and the space for annotations. The annotation space allowance will depend on the amount of details desired in a drawing. This space is used for the following: (1) views and edge gaps, (2) dimensions and tolerances, (3) local and general notes, and (4) bill of materials (for assembly drawings only). Note that clarity and readability are of prime importance in placing dimensions, tolerances, and notes on drawings [Earle, 1991; Madsen et al., 2002; Nee, 1983; Sexton, 2006). To properly document a design, some space must be available for both annotations and views. An annotation space allowance factor _ (greater than unity) will be used to account for the necessary space for annotations and multiview drawings. Because it is greater than unity, when used to multiply the views space, it enlarges the views space to accommodate for annotations.

Let:

W_m = full size model width requirement for views and annotations

H_m = full size model height requirement for views and annotations

_ = annotation space allowance factor (greater than unity)

Assume that:

$W_m = _ W_o$ (3)

$H_m = _ H_o$ (4)

It is not possible to accurately specify _ at the beginning of a drawing task because the actual space for annotations is not known at that time. At best, historical data and experience may be used to estimate its value. However, it will be subject to wide variations since it is associated with the view space dimensions and influenced by the chosen standard sheet size. Sometimes annotations are added to drawing views in 2D models. In such situations, no allowance is needed for annotations; that is, _ = 1 in these situations.

In general, engineering documents convey both technical and administrative information. Equations 3 and 4 take care of the technical information. The administrative information includes (1) margin space, (2) title block space, and (3) revision block space. The space for administrative information reduces the available space for the technical information on a standard sheet. To account for the space needed for administrative information, an administrative space allowance factor can be used.

Let:

W_p = horizontal dimension of standard sheet

H_p = vertical dimension of standard sheet

W_z = horizontal dimension of available space in standard sheet

H_z = vertical dimension of available space in standard sheet

_ = administrative space allowance factor (less than unity)

Assume that:

$W_z = _ W_p$ (5)

$H_z = _ H_p$ (6)

The factor _ is used to estimate the available working space of a standard sheet. It is evaluated only once for each standard sheet based on the chosen sheet format. If the size of the title block or revision block is changed, then will have to be reevaluated. Because companies generally decide on the format of standard sheets, it is possible to evaluate _ before creating drawings. Also ANSI guidelines may be used to create title and revision blocks so that _ can be evaluated.

As mentioned. there are two types of scaling: reduction (step-down scaling) and enlargement (step-up scaling). In the reduction case, the size of the graphic image is smaller than the design size. This situation is common in architectural, civil, mid-sized and heavy mechanical equipment design. In enlargement case, the size of the graphic image is larger than the design size. In micro- and nano-technologies, sizes of objects must be magnified for representation in macro scale. Enlargement scaling is therefore common in these fields. The two scaling situations will have different expressions for the scale factor.

The condition for scaling drawings is that the model space requirement (W_m, H_m) should

be at most equal to the working space available (W_z, H_z) on a standard sheet, after the scale factor is applied. In reduction scaling the area defined by (W_m, H_m) is greater than the area of (W_z, H_z), and in enlargement scaling the area of (W_m, H_m) is smaller than the area of (W_z, H_z). With *SF* as the scale factor for a drawing task, then for:

Reduction Scaling:

$$\frac{W_m}{SF} \le W_z \qquad \text{i.e.} \quad SF \ge \frac{W_m}{W_z} \quad (7a)$$

$$\text{and} \quad \frac{H_m}{SF} \le H_z \qquad \text{i.e.} \quad SF \ge \frac{H_m}{H_z} \quad (7b)$$

One can combine Equations 7a and 7b by noting that the larger ratio of the scale factor gives the desired value:

$$SF \ge \max\left(\frac{W_m}{W_z}; \frac{H_m}{H_z}\right) \quad (8)$$

Enlargement Scaling:

$$W_m x SF \le W_z \qquad \text{i.e.} \quad SF \le \frac{W_z}{W_m} \quad (9a)$$

$$H_m x SF \le H_z \qquad \text{i.e.} \quad SF \le \frac{H_z}{H_m} \quad (9b)$$

Combining Equations 9a and 9b, the smaller ratio gives the desire scale factor value:

$$SF \le \min\left(\frac{W_z}{W_m}; \frac{H_z}{H_m}\right) \quad (10)$$

Substituting Equations 3, 4, 5,and 6 into Equations 8 and 10, we have

Reduction Scaling:

$$SF \ge \frac{\beta}{\alpha} \text{ x } \max\left(\frac{W_o}{W_p}; \frac{H_o}{H_p}\right) \quad (11)$$

Enlargement Scaling:

$$SF \le \frac{\alpha}{\beta} \text{ x } \min\left(\frac{W_p}{W_o}; \frac{H_p}{H_o}\right) \quad (12)$$

The *SF* from Equations 11 and 12 should be rounded up to the nearest integer. The integer should then be compared with preferred values. The inequality sign guides the choice of the preferred value of *SF* for both reduction and enlargement scaling. Some judgment is inevitable when the estimate of *SF* is close to an integer. Normally the same scale factor is used for all standard multiviews of a model in a detail drawing. In addition, the top, front and right views must be placed in their relative positions required by the third- angle projection standard (USA) or first-angle projection standard (European).

Model Application

The application of the scale factor model involved three main tasks of modeling two components, selecting a scale factor for each component, and preparing a detail drawing for each component using the selected scale factor. Figure 2 shows the component used for reduction scaling, while Figure 3 shows the component used for enlargement scaling. The front view direction (FVD) is indicated in each case. The detail drawings were prepared and plotted on an A-size electronic sheet.

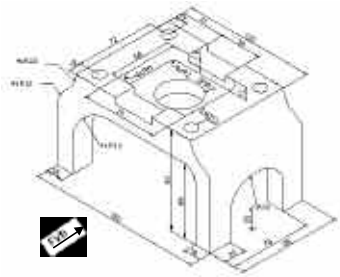

Figure 2 Cutting frame

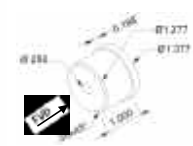

Figure 3 Roller pin

Component Modeling

Solid models of Figure 2 and Figure 3 were created in model space using Solid Edge v17 software. The main steps in the solid modeling task are to create sketches that were constrained to become profiles. The profiles were extruded or revolved to obtain the solids. Five profiles were used for the Figure 2 component, but only two profiles were used for the Figure 3 component. Holes and slots were created with the cutout tool.

Selection of Scale Factor

Step 1: *Select drawing sheet size (Wp and Hp).*

From Table A3 in the Appendix, English A-size sheet has dimensions 8.5” x 11” (279 mm x 216 mm). Assuming a landscape format (larger dimension is horizontal in layout), then:

W_p = 279 mm; H_p = 216 mm

Step 2: *Administrative space allowance factor*

This factor has been evaluated in the Appendix and is _ = 0.75. The estimated available working space (Equations 5 & 6) is defined by W_z = 209 mm and H_z = 162 mm.

Component 1 (Figure 2)

Step 3: *Choose FVD and determine the principal dimensions (W, H, D) of model.*

Based on the front-view direction chosen in Figure 2, the principal dimensions *W, H, D* are: W = 160 mm; H = 92 mm; D = 96 mm

Step 4: *Evaluate W_o and H_o (Equations 3 & 4)*

$W_o = W + D = 160 + 96 = 256$ mm

$H_o = H + D = 92 + 96 = 188$ mm

Step 5: *Specify _*

Assume _ = 1.4

Step 6: *Estimate SF using Equation 11*

The model values for $W_o = 256$ mm and $H_o = 188$ mm are larger than the available working space of $W_z = 209$ mm and $H_z = 162$ mm. Therefore, this is a reduction scaling situation.

Reduction Scaling:

$$SF \geq \frac{\beta}{\alpha} \text{ x max } \left(\frac{W_o}{W_p}; \frac{H_o}{H_p}\right) \quad (11)$$

$$SF \geq \frac{1.4}{0.75} \text{ x max} \left(\frac{256}{279}; \frac{188}{216}\right)$$

$$SF \geq 1.87 \text{ x max}(0.92; 0.87)$$

$$SF \geq 1.87 \text{ x } 0.92$$

$$SF \geq 1.72$$

Step 7: *Choose SF based on preferred values.*

The next integer above 1.72 is 2, and it is also a preferred scale factor (Table A2: Metric Scales; Appendix). Therefore, SF = 2.

Component 2 (Figure 3)

Step 3: *Choose FVD and determine the principal dimensions (W, H, D) of model.*

Based on the front-view direction chosen in Figure 3, the principal dimensions *W, H, D* are:

W= 1.377 in; H = 1.377 in; D = 1.0 in

Because this component is cylindrical, two of the standard orthographic views will be identical, and one will be redundant. Hence with the few features on the component, a two-view (front and right) detail drawing will be prepared.

Step 4: *Evaluate Wo and Ho (Equations 4 & 5)*

$W_o = W + D = 1.377 + 1.0 = 2.377$ in

$H_o = H = 1.377$ in (for front and right views only)

Step 5: *Specify _*

This is a relatively simple component with very few features, so a low _ is attractive.

Assume _ = 1.25

Step 6: Estimate SF using Equation 12.

The model values for (W_o; H_o) = (2.377 in; 2.57 in) are smaller than sheet available working area of (W_z; H_z) = (8.3 in; 6.4 in). This is an enlargement scaling situation.

Enlargement Scaling:

$$SF \leq \frac{\alpha}{\beta} \text{ x min } \left(\frac{W_p}{W_o}; \frac{H_p}{H_o}\right) \quad (12)$$

$$SF \leq \frac{0.75}{1.25} \text{ x min } \left(\frac{11}{2.377}; \frac{8.5}{1.377}\right)$$

$$SF \leq 0.60 \text{ x min } (4.63; 6.66)$$

$$SF \leq 0.60 \text{ x } 4.63$$

$$SF \leq 2.8$$

Step 7: *Choose SF based on preferred values.*

The integers 2 and 3 (2.8 is close to 3) are candidate values for the scale factor. An SF of 3 will likely mean a crowded arrangement on the sheet, and it is not a preferred value. However, an *SF* of 2 will give more free space, and it is a preferred scale factor (Table A1 Appendix). Therefore, *SF* = 2 is selected.

Detail Drawing Creation

The detail drawing task involved the following steps:

1. Creating a drawing sheet template.
2. Creating an orthographic views template sheet, using selected scale factor from model.
3. Adding dimensions and notes.
4. Adding an isometric view insert.
5. Checking and printing drawings.

Using the chosen scale factors, detail drawings with isometric inserts were prepared. Figure 4 and 5 show the detail drawings for the components of Example 1 and Example 2 respectively. As can be observed from Figures 4 and 5, the drawing views and annotations are well accommodated in the drawing sheets, respectively. Thus the selected scale factors based on the estimates of the mathematic models are satisfactory. Therefore, the developed mathematical models appear to be realistic for reduction scaling and enlargement scaling. It can be concluded that the present common trial-and-error approach to plot scale factor selection needs to be replaced with systematic and consistent methods, and the models presented in this article offer some alternatives.

Influence of , on Scale Factor Model

Table 1 shows estimates of *SF* for different values of _ for Example 1. The value of changed by 42% from 1.2 to 1.7 before *SF* crossed the integer 2, the value selected for *SF* for Example 1. An error of 42% in _ would not have changed the selected value of the scale factor in this case.

Table 1: Influence of on scale factor of component 1

Trial	–	*SF*
1	1.2	1.47
2	1.4	1.72
3	1.6	1.96
4	1.7	2.09

Table 2: Influence of _ on scale factor of component 2

Trial	–	*SF*
1	1.2	2.9
2	1.4	2.5
3	1.6	2.2
4	1.7	2.0
5	1.8	1.9

Table 2 shows estimates of *SF* for different values of _ for Example 2. The value of changed by 50% from 1.2 to 1.8 before *SF* crossed the integer 2, which is the value selected for *SF* for Example 2. An error of 50% in would not have changed the conclusion about *SF*.

From Tables 1 and 2, the scale factor model appears not to be very sensitive to the value of _ This is certainly a good thing as it suggests a very robust model. It is worth noting that the inequality sign helps in choosing an appropriate scale factor. No doubt, there will be occasions where the design drafter may choose a scale factor value different from the calculated estimate. Good judgment will be necessary in such cases.

Dr. Edward Osakue is an Assistant Professor at the Department of Industrial Technologies at Texas Southern University, Houston, Texas.

References

Bertoline, G. R. and Wiebe, E. N. *Technical graphics communication* (3rd edition). Boston: McGraw Hill.

Duggai, V. (2000). *CADD Primer*. New York: Mailmax Publishing.

Earle, J. H. (1991). *Drafting technology* (2nd edition). Reading: Addison-Wesley Publishing.

Madsen, D. A., Folkestad, J., Schertz, K. A., Shumaker, T. M., Stark, C., & Turpin, J. L. (2000). *Engineering drawing and design* (3rd edition). New York: Delmar Thomson Learning.

Nee, J. G. (1983). *Mechanical engineering technology: Product Design and Drafting Problems*. Ann Arbor: Prakken Publications.

Sexton, T. J. (2006). *Engineering graphics: theory and problems.* Missions: SDC Publications.

Shih, Randy H. (2004). *AutoCAD 2005 tutorial- 3D modeling*. Missions: SDC Publications, Missions.

Shih, Randy H. (2006). *Parametric modeling with UGS NX4.* Missions: SDC Publications.

APPENDIX: Administrative Space and Standard Scale Factors

Standard Scale Factors

Tables A1 and A2 give some commonly used scales (Duggai, 2000; Madsen et al., 2002; Sexton, 2006) in some disciplines. However, the available scale factors in a plotter setup scale list box should be chosen at plotting time.

Table A1 Common mechanical and architectural scales.

Mechanical Scales		Architectural Scales	
Scale	Interpretation	Scale	Interpretation
1” = 1”	Full size	1” = 1’ - 0”	12th size
_” = 1”	Half size	_” = 1’ - 0”	24th size
_” = 1”	Quarter size	_” = 1’ - 0”	48th size
1/8” = 1”	Eighth size	1/8” = 1’ - 0”	96th size
1/10” = 1”	Tenth size	1/16” = 1’ - 0”	192th size

Table A2 Common civil and metric scales.

Civil Scales		Metric Scales	
Scale	Interpretation	Scale	Interpretation
1” = 10’	120th size	1:1	Full size
1” = 20’	240th size	1:2	Half size
1” = 30’	360th size	1:5	5th size
1” = 50’	600th size	1:10	10th size
1” = 60’	720th size	1:20	20th size
1” = 100’	1200th size	1:50	50th size

Estimating Administrative Information Space

Table A3 shows both English and Metric standard sheet dimensions. A standard size sheet has a planar surface with width and height dimensions.

Table A3 Standard drawing sheets.

Metric Sizes (mm)		English Sizes (Inches)	
A4	210 x 297	A	8.5 x 11
A3	297 x 420	B	11 x 17
A2	420 x 594	C	17 x 22
A1	594 x 841	D	22 x 34
A0	841 x 1189	E	34 x 44

As mentioned previously, the space needed for administrative information on a standard drawing sheet includes (1) margin space, (2) title block space, and (3) revision block space. Figure A1 shows the conceptual layout of standard sheet. The left or top margin is usually larger than the others to provide room for filing or binding the drawing sheet. The title block contains pertinent information (e.g., like company name and address, drawing title, drawing record number, names of design drafter and checker). Changes to approved drawings are documented in the revision block. The change information may include name of person making the change request, description of change, reason for change, request date, and approval information (Bertoline & Wiebe, 2003; Earle, 1991; Madsen et al., 2002; Nee, 1983; Sexton, 2006). The space for the administrative information is not available for technical information. Referring to Figure A1:

LM = left margin space

RM = right margin space

TM = top margin space

BM = bottom margin space

RB = revision block width

TB = title block height

W_p = horizontal size of standard sheet

H_p = vertical size of standard sheet

W_z = adjusted sheet width size

H_z = adjusted sheet height size

Figure A1 Drawing sheet and administrative space.

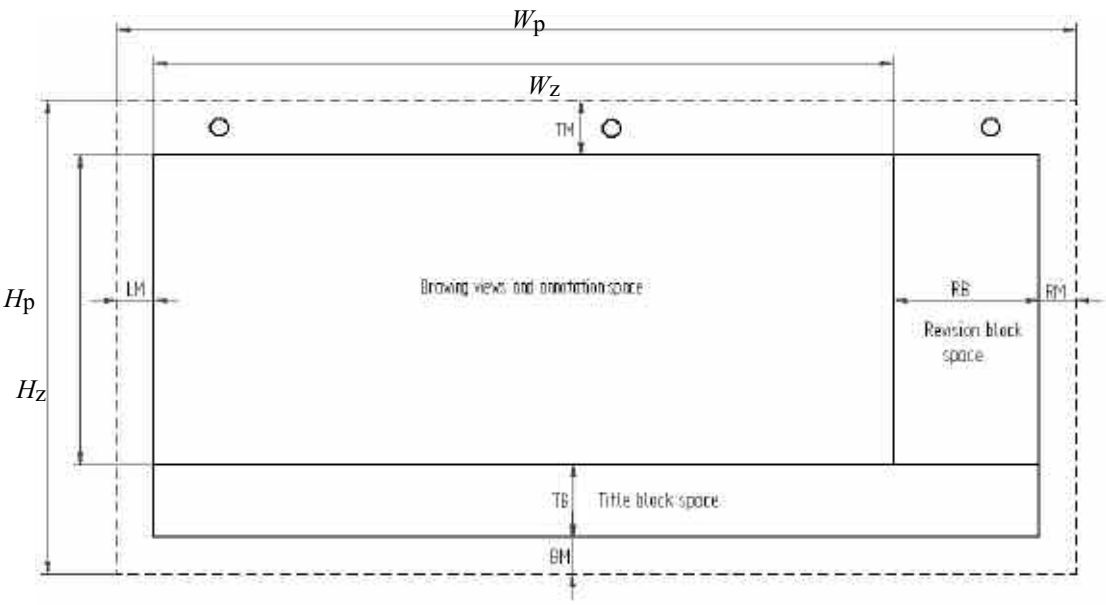

Let:

W_A = width of administrative space allowance

H_A = height of administrative space allowance

_ = administrative space allowance factor

From Figure A1:

$W_A = LM + RM + RB$ (A1)

$H_A = BM + TM + TB$ (A2)

$W_z = W_p - W_A$ (A3)

$H_z = H_p - H_A$ (A4)

Conceptually, we can also express W_z and H_z as:

$W_z = _ \, W_p$ (A5)

$H_z = _ \, H_p$ (A6)

Then: $_ = \sqrt{\frac{W_z H_z}{W_p H_p}}$ (A7)

Note that Equations A3 and A4 are based on physical dimensions. In fact W_z and H_zz can be measured directly from existing drawings. The physical values of W_z and H_z are used in Equation 7 to evaluate _. However, Equations A5 and A6 are abstract representations, but these ensure that the ratio

of the available working surface area to the standard sheet surface area is preserved. When _ is squared, it gives that fractional space of standard sheet available for technical information. Thus, it is an indirect measure of paper utilization.

Evaluating Administrative Space Allowance Factor.

For the illustrative examples in this article, the English A-size sheet was chosen for presenting the detail drawings. For this example, the title block height was chosen as

25 mm and revision block width as 80 mm. The top margin (TB) was taken as 12.5 mm, and the other margins (LM, RM, BM) were 7.5 mm each. The administrative space dimensions (Figure A2) are:

W_A = LM + RM + RB = 7. 5 + 7.5 + 80 = 95 mm from (A1)

H_A = BM + TM + TB = 7.5 + 12.5 + 25 = 45 mm from (A2)

The administrative space allowance factor is obtained as follows:

$W_z = W_p - W_A = 279 - 95 = 184$ from (A3)

$H_z = H_p - H_A = 216 - 45 = 171$ from (A4)

and _ $= \sqrt{\frac{W_z H_z}{W_p H_p}} = \sqrt{\frac{184 \times 171}{279 \times 216}} = 0.722$ from (A7)

Use _ = 0.75