The nature of middle school mathematics teachers' pedagogical content knowledge: The case of the volume of prisms

Reyhan Tekin-Sitrava
Kırıkkale University
<reyhan_tekin@yahoo.com>

Mine Işiksal-Bostan
Middle East Technical University
<misiksal@metu.edu.tr>

This paper explores student's misconceptions and difficulties with calculating the volume of a prism.

Introduction

Effective mathematics teaching is a complex issue since "teaching is not just talking" (Horowitz et al., 2005, p.88). One of the most important aspects of effective teaching is extensive and well-organised teachers' knowledge. Teachers' knowledge is a complex phenomenon and consists of various facets (Fennema & Franke, 1992). Shulman (1986) first introduced the major categories of teachers' knowledge: subject matter knowledge (SMK); curricular knowledge (CK); and pedagogical content knowledge (PCK). PCK could be regarded as the most important category of teachers' knowledge needed for high-quality teaching. Shulman (1986) stated that knowledge of students' misconceptions in any subject, knowledge of the reasons for students' misconceptions and the ways of overcoming these are the fundamental issues in PCK. Many students have misconceptions related to the volume of prisms. Thus, it is significant to explore teachers' PCK on students' misconceptions concerning the volume of prisms.

Related studies on students' misconceptions on the volume of prisms

Research has demonstrated that students have misconceptions and make errors while calculating the volume of prisms (Battista & Clements, 1996; Ben-Chaim, Lappan & Houang, 1985; Tekin-Sitrava & Isiksal-Bostan, 2014). To understand the reasons behind this low performance, researchers have focused on students' misconceptions and errors in this topic.

Ben-Chaim et al.'s study (1985) investigated students' errors in calculating the volume of prisms and noted four types of misconceptions and errors that the students make: "counting the actual number of faces showing; counting the actual number of faces showing and doubling that number; counting the actual number of cubes showing; and counting the actual number of cubes showing and doubling that number" (p. 397). Students who count the faces consider three-dimensional solids as two-dimensional, and students who count the visible unit cubes are not aware of the three-dimensionality of the solid. Ben-Chaim et al. (1985) asserted that these students do not recognise the 'hidden' part of the solid. In another study, Battista and Clements (1996) studied forth and fifth grade students' understanding of the volume of prisms formed by the unit cubes and reported

that the reasons for students' difficulties in calculating the volume of prisms were their inadequate spatial structuring and their understanding of the coordination of a set of faces. Moreover, according to Battista and Clements, students did not consider the common unit cubes on the adjacent faces. Tekin-Sitrava and Isiksal-Bostan (2014) investigated sixth, seventh and eighth grade students' knowledge of the volume of a rectangular prism and revealed that Turkish students' performance in calculating the volume was moderate. As in the study of Battista and Clements (1996), the researchers identified three difficulties: counting all outsides cubes; not realising common unit cubes on two adjacent faces; and not being able to give meaning to the numbers that were given in the problem. Moreover, they stated that the sources of students' misconceptions are: students' conceptualisation of a rectangular prism as two-dimensional and an uncoordinated set of faces; confusing area and volume concepts; and students' lack of understanding of three dimensions (Tekin-Sitrava and Isiksal-Bostan, 2014). Esen and Cakiroglu (2012) explored pre-service teachers' knowledge of using unit cubes to calculate volume and showed that they had difficulty in realising the errors in students' solution strategies and the reasons behind those errors. This study investigated middle school teachers' knowledge of students' misconceptions and the sources of these misconceptions related to the volume of prisms. The research questions are:

1. What do middle school mathematics teachers know about students' misconceptions related to the volume of prisms?
2. What do middle school mathematics teachers know about the sources of students' misconceptions related to the volume of prisms?

Method

This case study investigated four middle school teachers who taught 8th grade students in an elementary school in Ankara (Turkey). Each teacher had more than 10 years teaching experience. Pseudonymous have been used to present the data.

In the Turkish mathematics curriculum calculating the volume of 3D solids is one of the most important topics taught starting from the fifth grade. The relevant objectives are: calculating the volume of 3D solids with nonstandard units; forming formula related to the volume of rectangular prisms, square prisms, and cubes; estimating the volume of 3D solids; posing problems related to the volume of rectangular prisms, square prisms, and cubes; and solving these problems (Ministry of National Education [MoNE], 2013). Parallel to the Turkish Curriculum, the *Australian Curriculum: Mathematics* (ACARA, n.d.) also gives importance to understanding concepts related to the volume. More specifically, volume is placed in the measurement and geometry content for Years 4, 5, 7 and 8, and included in the fluency proficiency strand. The *Australian Curriculum: Mathematics* states that students should: compare volume by using unit cubes; choose appropriate units of measurement for volume; calculate the volume of rectangular prisms; develop formulas for volumes of prisms; and calculate the volume of prisms using formulas.

Data collection instruments

The data were collected via a questionnaire concerning the volume of prisms, semi-structured interviews and classroom observations. The volume of prisms questionnaire (VPQ) consisted of 3 open-ended structured questions with sub-dimensions, which were prepared by the researchers based on the related literature (Ball Thames & Phelps, 2008; Battista & Clements, 1996). The questions are provided in Figure 1.

Question 1

How many unit cubes constitute the square prism?

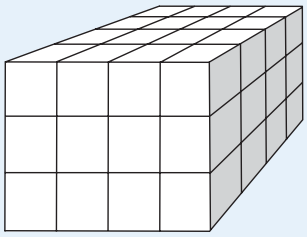

a) Which misconception(s) do you think your students will hold in answering this question?
b) What may be the reasons for these misconceptions? Please explain.

Question 2

How many unit cubes remain when one layer of unit cubes is removed, as indicated with grey colour in Diagram B, from all the faces of the square prism which is presented in Diagram A?

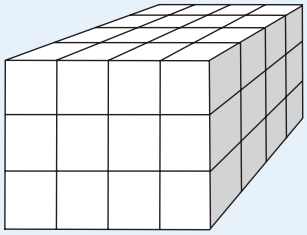

Diagram A

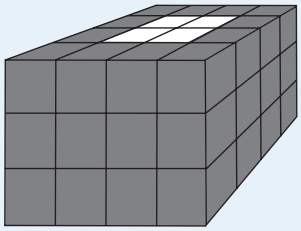

Diagram B

a) Which misconception (s) do you think your students will hold in answering this question?
b) What may be the reasons for these misconceptions? Please explain.

Question 3

Most of the students in Mr. Aslan's class made the same error while calculating the volume of the given prism. They stated that the answer should be 94.

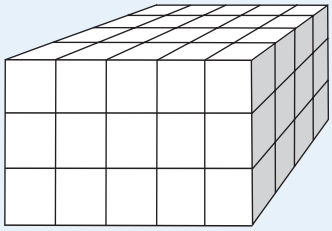

a) What are the elementary students' misconceptions which caused them to give the wrong answer?
b) What may be the reasons for the misconceptions? Please explain.

Figure 1. The volume of prisms (VPQ) questionnaire.

As can be seen in Figure 1, the sub-dimensions of the questions were similar even though the content of the questions was different. More specifically, the teachers were expected to state the possible misconceptions that students might have and the sources of these misconceptions in the first and the second question. However, in the third question, a common answer given by students was stated and it was emphasised that the answer was wrong. In this question, the teachers were expected to describe the possible

misconceptions which caused students to give the wrong answer. By asking teachers the third question, the aim was to examine whether or not the teachers could interpret students' solution strategies to come up with the answer 94. In this way, the teachers' knowledge of one of the students' misconceptions, which was presented in the literature, was discovered. Additionally, the teachers tried to explain the sources of those misconceptions.

Semi-structured interviews were conducted with four middle school teachers to get a deeper understanding of their responses to the questions in the VPQ. For a full description of teachers' knowledge, each teacher's lesson on teaching the volume of the prisms was observed. During the observations, the focus was on whether the teachers identified students' misconceptions or not. All the interviews, lasted for approximately 40 minutes, and were videotaped.

Data analysis

The data were analysed via the constant comparative method to produce an in-depth explanation of teachers' knowledge of students' misconceptions related to the volume of prisms, and sources of these misconceptions.

To begin with, all the interviews and videos of classroom observation were transcribed and initial codes were formed, compared, and categories were generated and labelled based on the participants' statements. In order to ensure the validity and reliability of the data analysis, two researchers coded all data and two mathematics educators who are expert in this field examined the codes.

Findings

In this study, the aim was to examine four middle school teachers' knowledge of students' misconceptions and the sources of these misconceptions related to the volume of prisms. Table 1 provides a summary of students' misconceptions and the sources of these misconceptions reported by the middle school teachers.

Table 1. Middle school teachers' knowledge of students' misconceptions and the sources of these misconceptions.

Misconception 1	Misconception 2
The volume of a prism is composed of the total number of visible unit cubes.	The volume of a prism is the total area of its faces.
Sources of the misconception	**Sources of the misconception**
• Not being able to comprehend the structure of prisms. • Not being able to visualise the shape of a prism.	• A lack of conceptual knowledge. • Not being able to comprehend the structure of prisms.

Middle school teachers' knowledge of the students' misconceptions and the sources of these misconceptions

Based on the analysis of the data, two misconceptions related to the volume of prisms were identified: the volume of a prism is composed of the total number of visible unit cubes, and the volume of a prism is the total area of its faces.

The volume of a prism is composed of the total number of visible unit cubes.

According to the four middle school teachers' knowledge, students are not aware of the unit cubes that they do not see and do not concentrate on the inside of the prism. Thus, the students think that a prism is only composed of the visible unit cubes. Mr. Esen explained this misconception as:

> Students only counted the cubes on the visible faces. In other words, they focused on the three faces. They may not have seen the others. (Figure 2).

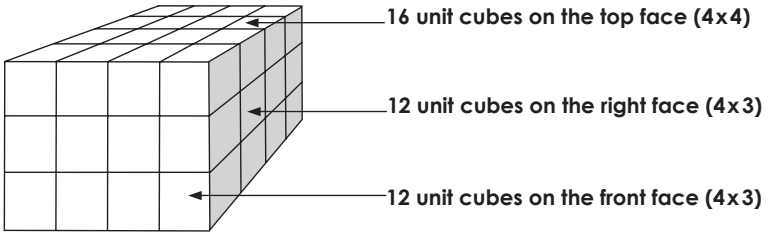

Figure 2. Mr. Esen's interpretations regarding students' misconception, that is, the volume of a prism is composed of the total number of visible unit cubes.

With respect to the data gathered from classroom observations, this misconception was only observed in Mrs. Kaya's classroom. Mrs. Kaya asked the students what the volume of the rectangular prism given in Figure 3 was. After a while, Mrs. Kaya asked the students to explain their solution strategy. The explanation of one of the students is given below.

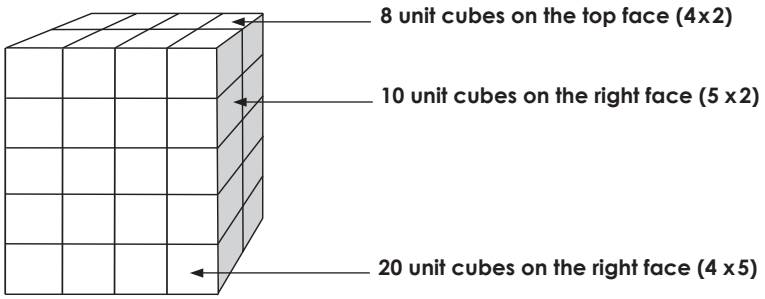

Figure 3. The rectangular prism that Mrs. Kaya asked students to calculate the volume, showing one student's explanation

There are 8 unit cubes on the top face, 20 unit cubes on the front face and 10 unit cubes on the right face of the prism. So, the volume is 38.

Mrs. Kaya's students counted the number of visible unit cubes to calculate the volume of the prism. In the interviews, the participating teachers specified different reasons for this misconception. Initially, Mrs. Akay and Mrs. Uzun stated that the reason behind this misconception might be that the students are not able to comprehend the structure of prisms. Mrs. Uzun explained that:

> Students do not see the back side of the rectangular prism. They only calculate [the unit cubes] the visible faces. In my opinion, they do not know the shape of a prism. For example, they do not know that it has six faces. Thus, they only calculate three faces.

Mr. Esen and Mrs. Kaya identified another source of the misconception. The teachers believe that the students may not be able to visualise the shape of a prism since they do not see these shapes in daily life. As Mr. Esen explained:

> They encounter an object, which they have not seen so far in their lives. In other words, students cannot concretise a prism and cannot visualise it.

The volume of a prism is the total area of its faces. Four middle school teachers defined this misconception as students' misunderstanding or confusion about the meaning of surface area and volume. For this reason, students calculate the surface area of the prism instead of calculating its volume.

The misconception was observed in the lessons of four teachers. An extract from the observation of Mrs. Uzun's class, in which she asked the students the following question, can be given as an example.

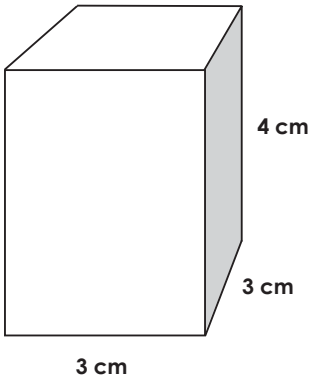

Question: What is the volume of the square prism presented in the figure?

The solution of one of Mrs.Uzun's students is given below:

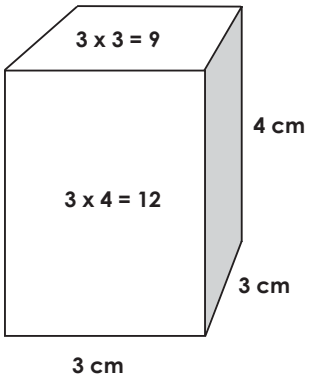

$y = 2 \times 9 + 4 \times 12$

$y = 18 + 48$

$y = 66$

As it can be seen, the student solved the question by calculating the surface area, which reveals that the student confused the surface area and the volume of the prism. Similar examples were observed in other teachers' lessons.

Two teachers, Mrs. Kaya and Mrs. Akay, added that students who had the aforementioned misconception counted all the visible unit cubes one by one while calculating the volume of a prism formed by unit cubes. As the teachers mentioned, the students did not notice that some unit cubes are common to some faces. Thus, the students count common unit cubes more than once. Mrs. Akay's explanation for this issue is as follows:

> The students might not realise that the unit cubes here [the upper column on the front layer] can have common unit cubes with the unit cubes there [the upper column on the right layer] (indicated in grey). I mean that they [the students] do not think that some unit cubes belong to two or three faces of the prism.

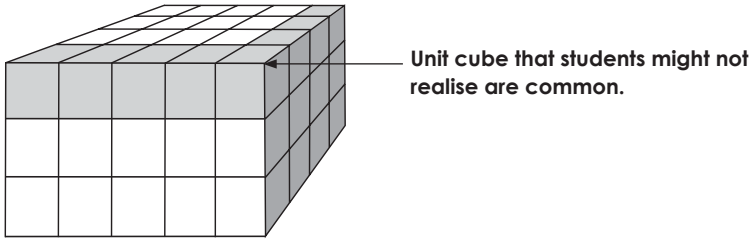

Figure 4. Mrs. Akay's interpretations regarding the misconception in question 3.

Regarding the sources of this misconception, the teachers proposed two: a lack of conceptual knowledge, and not being able to comprehend the structure of prisms. They explained that because students do not understand what surface area is, what volume is, and what the difference between these two concepts is, they confuse these two terms. As Mrs. Kaya explained:

> The students do not know what volume is or area is. Therefore, they are confused as to when to calculate the volume and when to calculate the area. Students have lack of conceptual knowledge.

Moreover, the teachers considered that students might not comprehend the structure of prisms, which could be another source of this misconception. In fact, according to Mrs. Uzun, students might only focus on the faces of the prism and see prisms as two-dimensional. For this reason, students confuse the surface area with volume concepts.

Discussion and implications

The present study aimed to obtain information regarding teachers' knowledge of students' misconceptions related to the volume of prisms and the sources of the misconceptions. Based on the analysis of the data, the students' misconceptions are that volume of a prism is composed of the total number of visible unit cubes and the volume of a prism is the total area of its faces. The findings related to teachers' knowledge on students' misconceptions coincided with a related study whose aim was to investigate middle school students' misconceptions and difficulties in calculating the volume of the prism (Tekin-Sitrava & Isiksal-Bostan, 2014).

As it was stated, one of the misconceptions is that the volume of a prism is composed of the total number of visible unit cubes. An interesting finding of this study is that although all teachers highlighted this misconception during the interviews, they did not focus too much on it in their lessons and did not discuss the fact that prisms are composed of unit cubes. In other words, they did not even attach importance to teaching the structure of a prism while teaching its volume, even though they stated that one of the reasons for this misconception might be a lack of understanding of the structure

of prisms. Although the teachers have knowledge about students' misconceptions, they do not attempt to discover whether or not their students really had them. In this regard, it could be concluded that teachers did not take students' preconceptions into consideration while teaching the volume of prisms. However, previous research studies (Biggs & Moore, 1993; Duhaney & Duhaney, 2000) emphasised that students' knowledge might be constructed according to their misconceptions. Furthermore, all the teachers specified another misconception, which is the volume of a prism is the total area of its faces. In contrast to the previous misconception, teachers discussed this misconception in their lessons and tried to eliminate it.

It can be concluded that if these teachers encountered any misconception related to the volume of the prisms while teaching the subject, they discussed that misconception and tried to overcome it. However, if they did not identify any misconceptions during the lesson, they didn't discuss those misconceptions. Instead, they preferred to solve further questions using volume formula. The reason for using this method might be that eighth graders take the high school entrance exam in Turkey in order to be admitted into a high school. The exam is a multiple-choice exam in which students have to solve as many questions correctly as possible within a limited time. As the exam is important for students' high-school education, students have a tendency to memorise and apply the formulas. Thus, teachers emphasise using formulas or multiplying width × length × height. Also the volume of prisms is one of the last topics covered in the classroom (MoNE, 2006) so teachers might not have enough time to discuss the topic deeply. Because of time constraints and the need to prepare students for the exam, it could be stated that these teachers teach the topic (the calculation of the volume of prisms) superficially and do not spend much time on students' misconceptions and the sources of these misconceptions during their teaching.

Based on the findings, this study provides invaluable implications for in-service teachers. Teachers may use manipulatives like base-ten blocks to enhance students' understanding regarding the volume concept. By creating such a learning environment, teachers may reduce the chance of students having possible misconceptions and enhance students' learning.

The current study is a qualitative case study and the number of participants is limited. This study presents valuable information about these Turkish middle school teachers' knowledge of students' misconceptions. However, longitudinal studies with a larger number of participants could be designed to draw conclusions and to generalise the results. Also, teachers' knowledge on the volume of prisms could be investigated in terms of SMK and the other characteristics of PCK. This type of research would help us gain an insight into teachers' knowledge about the volume of prisms.

References

Australian Curriculum, Assessment and Reporting Authority (ACARA) (n.d.). *The Australian Curriculum: Mathematics.* Retrieved from: https://www.australiancurriculum.edu.au/f-10-curriculum/mathematics/

Ball, D.L., Thames, M.H., & Phelps, G. (2008). Content knowledge for teaching: What makes it special? *Journal of Teacher Education, 59*(5), 389–407.

Battista, M. T., & Clements, D. H. (1996). Students' understanding of three-dimensional rectangular arrays of cubes. *Journal for Research in Mathematics Education, 27*(3), 258–292.

Ben-Chaim, D., Lappan, G., & Houang, R.T. (1985). Visualizing rectangular solids made of small cubes: Analyzing and affecting students' performance. *Educational Studies in Mathematics, 16*, 389–409.

Biggs, J. B., & Moore, P.J. (1993). *The process of learning.* Prentice Hall of Australia, Sydney.

Duhaney, D.C., & Duhaney, L.M.G. (2000). Assistive technology: Meeting the needs of learners with disabilities. *International Journal of Instructional Media, 27*, 393-401.

Esen, Y., & Cakiroglu, E. (2012). İlkörğetim matematik öretmen adaylarinin hacim ölçmede birim kullanmaya yönelik kavrayıları. *MAT-DER Matematik Eğitimi Dergisi, 1*(1), 21–30.

Fennema, E., & Franke, M. L. (1992). Teachers' knowledge and its impact. In D. A. Grouws (Ed.), *Handbook of research on mathematics teaching and learning* (pp. 147–164). NewYork: Macmillan.

Horowitz, F.D., Darling-Hammond, L., & Bransford, J. with Comer, J., Rosebrock, K., Austin, K., & Rust, F. (2005). Educating teachers for developmentally appropriate practice. In L. Darling-Hammond & J. Bransford (Eds.), *Preparing teachers for a changing world: What teachers should learn and be able to do* (pp. 88-125). San Francisco, CA: Jossey-Bass.

Ministry of National Education [MoNE] (2006). *lkögretim matematik dersi ögretim programı 6–8. sınıflar: Ögretim programı ve kılavuzu.* Ankara, Turkey: MoNE.

Ministry of National Education [MoNE] (2013). Ortaokul matematik dersi ögretim programı 5–8. sınıflar. Ankara, Turkey: MoNE.

Shulman, L.S. (1986). Those who understand: Knowledge growth in teaching. *Educational Researcher, 15*(2), 4–14.

Tekin-Sitrava, R., & Işiksal-Bostan, M. (2014). An investigation into the performance, solution strategies and difficulties in middle school students' calculation of the volume of a rectangular prism. *International Journal for Mathematics Teaching & Learning.* http://www.cimt.plymouth.ac.uk/

From Helen Prochazka's

Scrapbook

Fraction shame

In 1950, the Association of Teachers of Mathematics (ATM) was established in the United Kingdom by Caleb Gattegno (1911–1988), to encourage the development of mathematics education to be more closely related to the needs of the learner. In his farewell address to the ATM in 1988 Gattengo spoke of adding fractions, and that true understanding of a topic may come after many years of delusionary success with it.

> Once at my desk in Addis Abbaba in 1957, I blushed. I was so ashamed of myself. 1957, twenty years after I got my doctorate in mathematics, I understood what we do when we add two fractions… I did not know that to add two fractions involves addition. I said it but I didn't know it. I could write it, I could get the answer, but I didn't know what it meant to add two fractions. And suddenly, I realised that, whenever I have pears and apples, two pears and three apples, I don't have five apples or five pears. I have something altered, I have five pieces of fruit. So why did I do that? Because I wanted to find how to get them together, I had to raise myself to another level where pears, pearness and appleness are replaced by fruitness. And at that moment I can say five. And I never realised that 'common denominator' meant 'give the same name' to both. And in the middle of the word 'denominator' I see a French word 'nom' which I knew very well. It didn't strike me, ever, that it is addition that forces me to get denominators, common denominators, not fractions. That was my shame.