DOCUMENT RESUME

ED 449 204 TM 032 314

AUTHOR	Obiekwe, Jerry C.
TITLE	Identifying the Latent Structures of the Noel-Levitz Student Satisfaction Inventory (SSI): The Community, Junior, and Technical College Version. ASHE Annual Meeting Paper.
PUB DATE	2000-11-00
NOTE	17p.; Paper presented at the Annual Meeting of the Association for the Study of Higher Education (25th, Sacramento, CA, November 16-19, 2000).
PUB TYPE	Numerical/Quantitative Data (110) -- Reports - Research (143) -- Speeches/Meeting Papers (150)
EDRS PRICE	MF01/PC01 Plus Postage.
DESCRIPTORS	*Educational Experience; Factor Analysis; *Factor Structure; Higher Education; *Reliability; *Satisfaction; *Two Year College Students; Two Year Colleges
IDENTIFIERS	Student Satisfaction

ABSTRACT

This study examined the internal consistency of the Student Satisfaction Inventory (SSI) (L. Schrener, S. Juillerat, and Noel-Levitz Group, 1997) and the latent structures of the instrument. The SSI is an instrument that measures students' satisfaction with their college experiences. The SSI was administered to 251 students randomly selected from the student population. Findings indicate that the SSI is internally reliable both as an entity and on the subscale level. They also indicate that the SSI appears to elicit two latent factors. (Author/SLD)

TM

ABSTRACT

Identifying the Latent Structures of the Noel-Levitz Student Satisfaction Inventory (SSI): The Community, Junior, and Technical College Version.

The study examined the internal consistency of Student Satisfaction Inventory(SSI). It also investigated the latent structures of the instrument. The study concluded that SSI is internally reliable both as an entity and on the subscale level. It also concluded that SSI appears to elicit two latent factors.

Jerry C. Obiekwe

Identifying the Latent Structures of the Noel-Levitz Student Satisfaction Inventory (SSI): The Community, Junior, and Technical College Version.

Jerry C. Obiekwe
The University of Akron-Wayne College

Paper presented at the 25th Annual Conference of the Association for the Study of Higher Education. November 16-19, 2000, Sacramento, CA

Identifying the Latent Structures of the Noel-Levitz Student Satisfaction Inventory (SSI): The Community, Junior, and Technical College Version.

Introduction

Student satisfaction Inventory (SSI) for two year colleges was developed by Laurie Schreiner and Stephanie Juillerat with assistance from USA Group Noel-Levitz (1997). SSI, whose design was based on the principle of consumer theory, is an instrument that measures students' satisfaction in accordance with their college experiences. Results from the SSI, can then be used to improve student retention, staff and organizational development, student success, marketing and recruiting, enrollment management, strategic planning and resource development, and institutional effectiveness (Noel-Levitz, 1997). Essentially, the instrument taps into the concept that students enroll in colleges with certain definite expectations, and that those expectations are met when students experience satisfaction.

For each item on the SSI, students rate the importance of that expectation on a scale of 1-7 and also simultaneously rate their satisfaction level on that item on a scale of 1-7. Essentially, each item should produce three pieces of information: the importance of the item, the satisfaction level of the expectation, and the performance gap. The importance score deals with the strength of students feelings regarding the expectation, whereas the satisfaction scores deals the satisfaction level concerning whether the institution has met the expectation. The performance gap scores, which is the importance score minus the satisfaction score, reflects how well the college is meeting the expectation generally. Items with large performance gap scores are indicative of areas in the institution where the expectations are short-changed as perceived by students.

Instrument

The inventory contains 70 items of expectation and six items that assess the institutional responsiveness to diverse population. Students responses on these 76 items help provide information on the following 12 composite scales: (1) Academic Advising and Counseling Effectiveness (AACE) assesses the comprehensiveness of the institution's advising program and has the following items: 6, 12, 25, 32, 40, 48, 52. (2) Academic Services (AS) assesses the college's academic support system for students and has the following items: 14, 21, 26, 34, 42, 50, 55. (3) Admissions and Financial Aid Effectiveness (AFAE) assesses the college's ability to enroll students and has the following items: 7, 13, 20, 33, 41, 49. (4) Campus Climate (CC) assesses students' sense of college pride and belongingness and has the following items 1, 2, 16, 22, 27, 28, 31, 36, 44, 45, 52, 57, 59, 63, 67. (5) Campus Support Services (CSS) assesses the college's support programs and services with the following items: 10, 17, 19, 30, 38, 47, 59. (6) Concern for the Individual (CI) assesses the college's commitment for respect for students with the following items:2, 16, 25, 29, 48. (7) Instructional Effectiveness (IE) assesses college's commitment to academic excellence with the following items: 2, 18, 23, 29, 37, 46, 54, 58, 61, 64, 65, 66, 69, 70. (8) Registration Effectiveness (RE) assesses

registration and billing matters with the following items: 5, 8, 15, 35, 43, 51, 56, 60, 62. (9) Responsiveness to Diverse Populations (RDP) assesses the commitment of the college in enrolling students who are under represented with the following items: 81, 82, 83, 84, 85, 86. (10) Safety and Security (SS) assesses the commitment of the college to students' on campus safety and security with the following items: 4, 11, 24, 31, 39. (11) Service Excellence (SE) assesses staffs' attitude toward students with the following items: 5, 22, 26, 27, 44, 57, 62, 63, 67. (12) Student Centeredness (SC) assesses the college's endeavor to making students feel valuable with the following items: 1, 16, 27, 28, 36, 57.

The scale RDP were eliminated from this study for both importance and satisfaction because there were no data on the importance scale regarding the RDP scale. Consequently the composite scales were reduced to 11.

Subjects

There were 251 students who were randomly selected from the student population. These students were given SSI to be completed. Their responses were then analyzed.

Objective of the study

There are two purposes in this study. The first was to investigate the internal consistency reliability of SSI and comparatively see whether it matches those cited in the SSI manual. The reliability coefficient that was cited in the SSI was for the whole instrument. There were no reliability coefficient cited in the manual with regard to the 11 composite scales. Consequently, this study will attempt to examine the reliability of those 11 scales. The second purpose of this study is to attempt to identify the latent variables associated with this instrument. In attempting to identify the latent variables, the question is which of the data set(Satisfaction data, Importance data and Performance gap data) can provide the best fit to the identified measurement model?

Procedure

The reliability of the whole instrument was examined from three perspectives. The first perspective was using students responses on importance scale. The second perspective is using student responses on the satisfaction scale. The third perspective is using data from the performance gap, which is importance score minus satisfaction score.
In terms of the reliabilities of the 11 composite scales, they were also investigated by looking at student responses on the importance scale, satisfaction scale and the performance gap. All the analyses involving the reliability of SSI were carried out using the SPSS Version 8.0).

In order to ascertain the dimensions of the instrument, the student responses on the 70 items of expectation, with regard to satisfaction scale, importance scale and the performance gap scale were submitted to exploratory factor analysis (EFA). The extraction criterion was eigenvalue greater than or equal to one (Gorsuch, 1983). The

satisfaction data and importance data each yielded 16 factors, while performance gap data produced 17 factors.

Clearly, the identification of the latent variables of SSI does not appear possible from the item perspective since they are producing dimensions far greater than 11. An alternative approach is to investigate the latent structure of this instrument from the perspective of the 11 composite scales (Olivarez & Tallent-Runnels,1994; Olejnik & Nist, 1992; Murphy, & Alexander, 1998; Olaussen, & Braten, 1998).

In an attempt to identify the latent variables, the students responses were first submitted to exploratory factor analysis (EFA) using the 11 composite scales as the variables. These 11 variables evolved from taking the sum of each student responses on the 11 composite scales. This summation procedure was separately done for the importance scale, the satisfaction scale, and the performance gap. The 11 variables yielded 2 factors using the satisfaction data; the importance data produced only one factor, and the performance gap yielded only one factor also, based on the extraction criteria of eigenvalue greater than or equal to one. The satisfaction data almost yielded 3 factors because one of the eigenvalues was very close to one. Similarly, the importance data and the performance gap each could have produced 2 factors because the both had eigenvalues that were very close to one. Based on these findings it seemed logical to test a two-factor measurement model using importance data, satisfaction data, and performance gap data in order to see which data set provide the best fit.

The satisfaction data, importance data, and the performance gap data were each separately factor analyzed and forced to load on two factors (see Table 3, Table 4, Table 5). Because the factor patterns of the satisfaction and performance data were almost similar, they were used to develop the six two-factor models that were submitted to confirmatory factor analysis via EQS (Bentler, 1995). In other words, a two-factor measurement model which evolved from the factor pattern of satisfaction data and the factor pattern of performance data were separately evaluated using the following information: satisfaction data, importance data and performance data. The idea here is to investigate which of these data set will provide the best fit to the two-factor measurement model.

Internal consistency of the instrument as an entity:

The reliability of the instrument as an entity refers to the internal consistency or Cronbach's alpha coefficient of the items without regard to the composite scales. These coefficients are reported in Table 1. In Table 1, the first column represents the reliability generated from the satisfaction data, the second column represents the reliability generated from important data, the third column represents the reliability generated from the performance gap data, and the fourth and fifth column represent the reliability reported in the SSI manual.

Table 1. The internal consistency reliability of SSI as an entity with regard to Satisfaction data, important data, and Performance Gap Data.

Satisfaction Data	Importance Data	Performance Gap Data	SSI Manual: Satisfaction Data	SSI Manual: Importance Data
.97	.96	.96	.97	.98

The reliability (Internal consistency) of the individual composite scales:

The reliability of the individual composite scales refers to the internal consistency or Cronbach's Alpha of each of the11 composite scales. The SSI manual did not provide this information. However, Table 2 portrays the reliabilities of the 11 composite scales, where the first column represents alpha generated from satisfaction data, the second column represents alpha generated from importance data, and the third column represents alpha generated from performance gap data.

Table 2. The Reliability(Internal consistency) of the Individual Composite Scales with regard to Satisfaction data, Importance data, and Performance Gap Data.

Composite Scales	Satisfaction Data	Importance Data	Performance Gap Data
1. AACE	.81	.83	.84
2. AS	.74	.79	.73
3. AFAE	.82	.83	.78
4. CC	.91	.90	.88
5. CSS	.80	.77	.69
6. CI	.71	.66	.71
7. IE	.92	.88	.91
8. RE	.81	.80	.80
9. SS	.56	.69	.61
10. SE	.85	.86	.82
11. SC	.83	.82	.77

Validation of the two-factor measurement model

There were six two-factor models that were tested in this study via EQS (Bentler, 1995). The first was labeled model 1 (see Figure 1). Model 1 evolved from the factor analysis of the satisfaction data (see Table 3), and was evaluated using the same data set. The assessment of the overall fit of Model 1 is reported in Table 6, where the first row represents the Bentler-Bonett Normed Fit Index (NFI), while the second row presents the Comparative Fit Index (CFI). According to Bentler(1992), in each of these indices, a value greater than .90 represents an acceptable fit to the data. Figure 2 represents Model 2. This model which also evolved from factor analytic study of the satisfaction data (see Table 3) was assessed using the importance data. The overall fit of Model 2 is also

reported in Table 6. Model 3, which is represented in Figure 3, also grew out of EFA of the satisfaction data. It was evaluated using the performance gap data. The data representing the fit of this model is as well posted in Table 6. The CFI of Model 1 and Model 2 were compared by looking at the change in their chi-square. That change was $\chi^2(1, N = 251) = 15.69, p < .005$, which represented a significant improvement in model fit.

Figure 4 represents Model 4, which stemmed from the EFA of the performance gap data. Model 4 was assessed using the satisfaction data. Table 7 portrays the fit indices of this model. Figure 5 is the representation of model 5, which also grew out of the factor analytic study of the performance data. Model 5 was validated using importance data, and its overall fit is posted in Table 7. The last model, which is Model 6, also evolved from the factor analysis of performance gap data (see Table 3). Model 6 was evaluated using performance gap data. The fit indices of Model 6 are shown in Table 7. Similarly, the CFI of Model 4 and Model 6 were compared by looking at the change in their chi-square indices. That change was $\chi^2(3, N = 251) = 40.02, p < .005$, which represented a significant improvement in model fit.

Table 3. Factor Pattern generated by Satisfaction Data

Variables	Factor 1	Factor 2
1 AACE	.56	.61
2 AS		.65
3 AFAE		.80
4 CC	.89	
5 CSS		.90
6 CI	.78	
7 IE	.87	
8 RE	.82	
9 SS		.57
10 SE	.83	
11 SC	.91	

Table 4. Factor Pattern generated by importance data

Variables	Factor 1	Factor 2
1 AACE	.58	.63
2 AS	.55	.65
3 AFAE		.79
4 CC	.86	
5 CSS		.89
6 CI	.70	.52
7 IE	.86	
8 RE	.78	
9 SS	.68	
10 SE	.81	
11 SC	.87	

Table 5. Factor Pattern generated by Performance Gap data

Variables	Factor 1	Factor 2
1 AACE	.63	.52
2 AS	.59	.58
3 AFAE		.79
4 CC	.87	
5 CSS		.85
6 CI	.82	
7 IE	.86	
8 RE	.75	
9 SS		.63
10 SE	.84	
11 SC	.86	

Table 6. Overall Assessment Fit for Model 1, Model 2, and Model 3

	Model 1	Model 2	Model 3
NFI	.93	.93	.92
CFI	.95	.94	.93

Table 7. Overall Assessment Fit For Model 4, Model 5, and Model 6.

	Model 4	Model 5	Model 6
NFI	.94	.90	.92
CFI	.95	.91	.93

Discussion

The first purpose of this study was to examine the reliability of SSI as an entity. Three separate data set were used to accomplish this goal. The satisfaction data yielded an alpha coefficient of .97, which is the same as cited in the Manual. The Importance data set also yielded a Cronbach alpha of .96 while the manual cited a reliability coefficient of .98. The reliability coefficient produced by the performance gap data set is the same as those produced by importance data. Clearly, the reliability coefficient of SSI as produced by this study is about the same as cited in the manual, and was also high. Secondly, it appears that the reliability of SSI can be obtained by using either satisfaction data or importance data or performance gap data, since the coefficients produced by these three data set were almost the same.

It was also the purpose of this study to investigate the reliability of the eleven composite scales. The reliability of the 11 composite scales were not cited in the SSI manual, consequently the results obtained in this study cannot be compared to any already established figures. The reliability coefficients of the 11 scales were consistently similar across all three data set: satisfaction, importance and performance data set. However, some scales, such as, SS and CI had relatively low reliability coefficients. What is also clear is that any of the three data sets can be used to investigate the reliability of the composite scales.

The second purpose of this study was to identify the latent variables underlying the SSI . In order to accomplish this goal the three two-factor models, model 1, model 2, model 3, which evolved from the factor analysis of the satisfaction data were tested using satisfaction data, importance data, and performance gap data. Although the fit indices of the three models were relatively reasonable in all three data sets, model 1, which relates to satisfaction data produced the highest CFI of .95. It therefore appears that of the three data set, satisfaction data can best explain the two-factor model generated by the factor analysis of satisfaction data.

Also in attempting to identify the latent variables, another three two-factor models, model 4, model 5, model 6, which stemmed from the factor analysis of the performance gap data were evaluated using satisfaction data, importance data, and performance gap data. The CFI of all three models were high, however, model 4 which relates to satisfaction data showed the best fit since it produced CFI equal to .95. Again, in this instance, it appears that the satisfaction data can best explain the two-factor model generated by the factor analysis of performance gap data.

In summary, it can be concluded that in examining the internal consistency of SSI either as an entity or on the composite scale level, the use of the satisfaction scores or the importance scores or the performance gap scores will produce reliability coefficients that are relatively similar. Also SSI is an instrument that appears to have two latent variables, and that the satisfaction data is the best data set to be used in the evaluation of the instrument.

Model 1

Figure 1 - A two-factor measurement model which evolved from the exploratory factor analysis of satisfaction data and also was validated with the same data set.

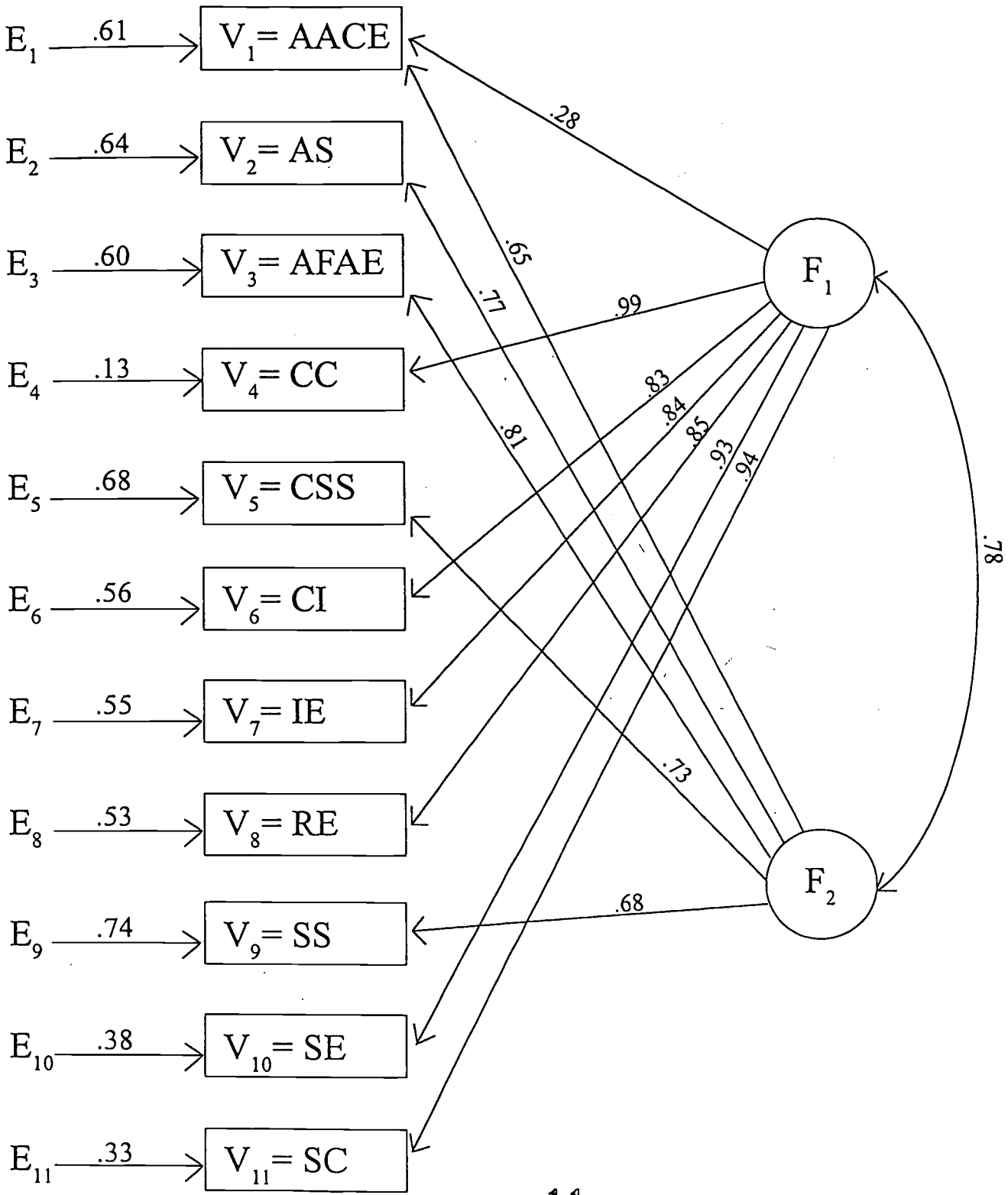

Model 2

Figure 2 - A two-factor measurement model which evolved from the exploratory factor analysis of satisfaction data and also was validated using important data

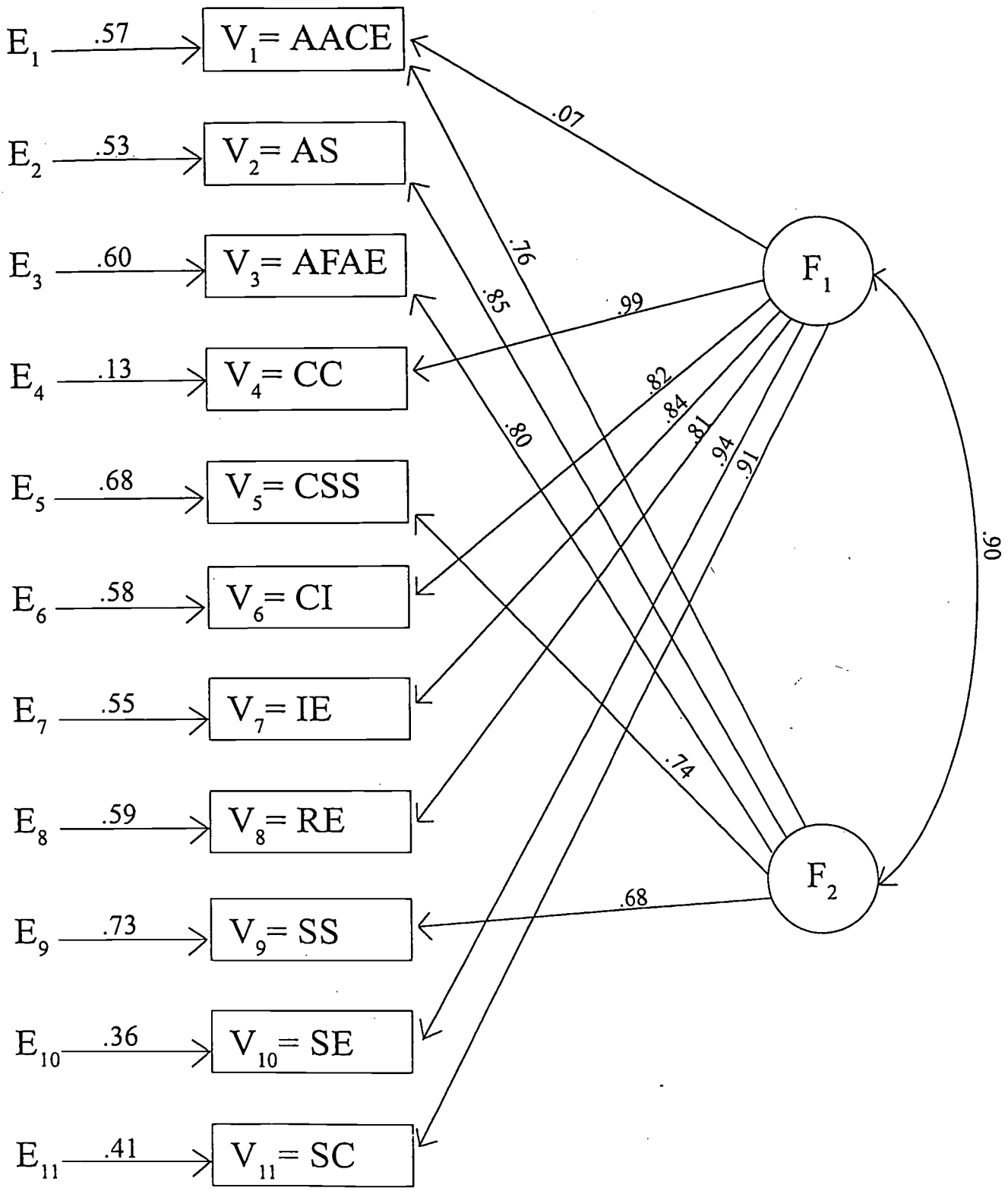

Model 3

Figure 3 - A two-factor measurement model which evolved from the exploratory factor analysis of satisfaction data and also was validated using performance gap data

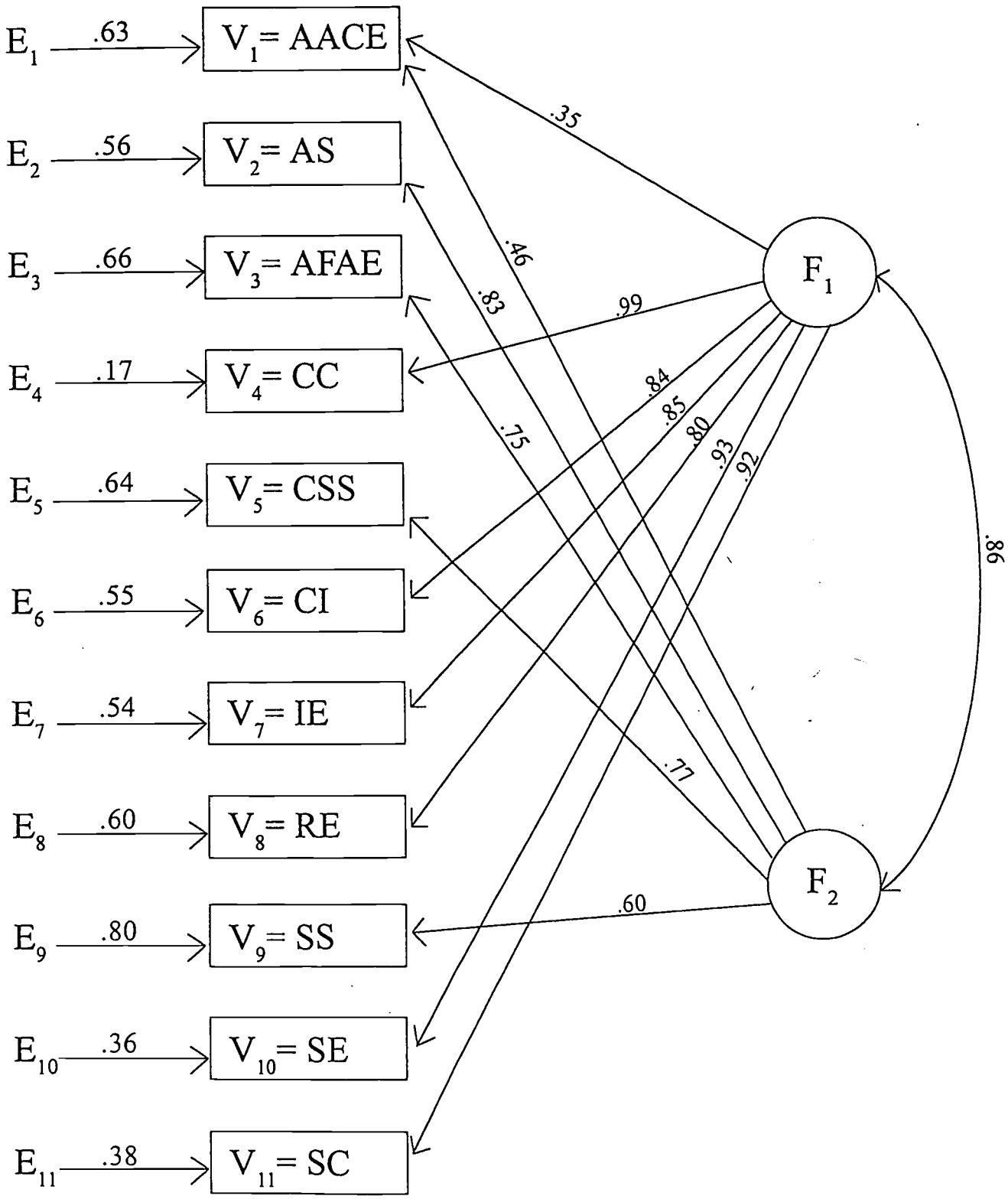

Model 4

Figure 4 - A two-factor measurement model which evolved from the exploratory factor analysis of performance gap data and was validated using satisfaction data set

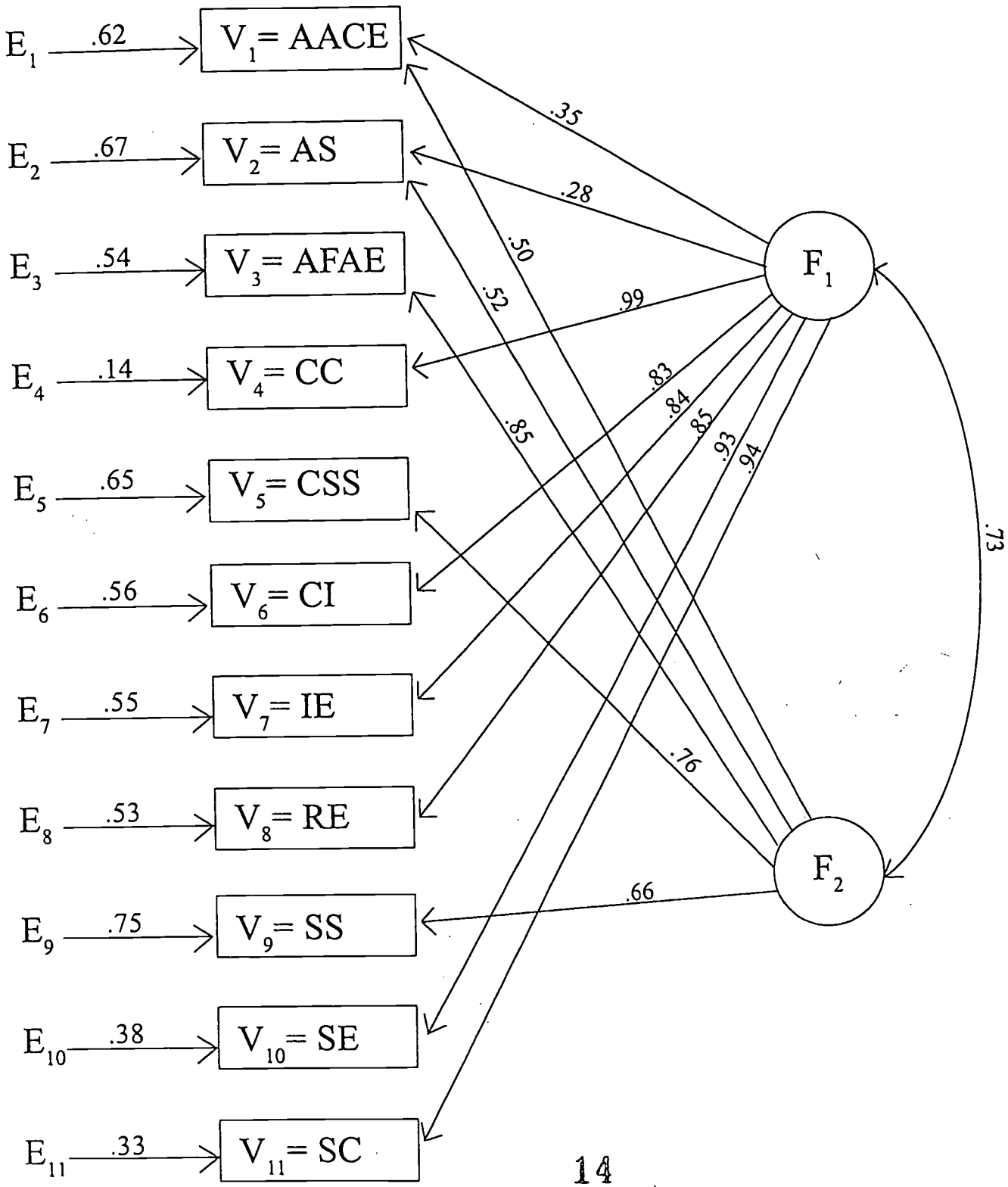

Model 5

Figure 5 - A two-factor measurement model which evolved from the exploratory factor analysis of performance gap data and was validated using importance data set

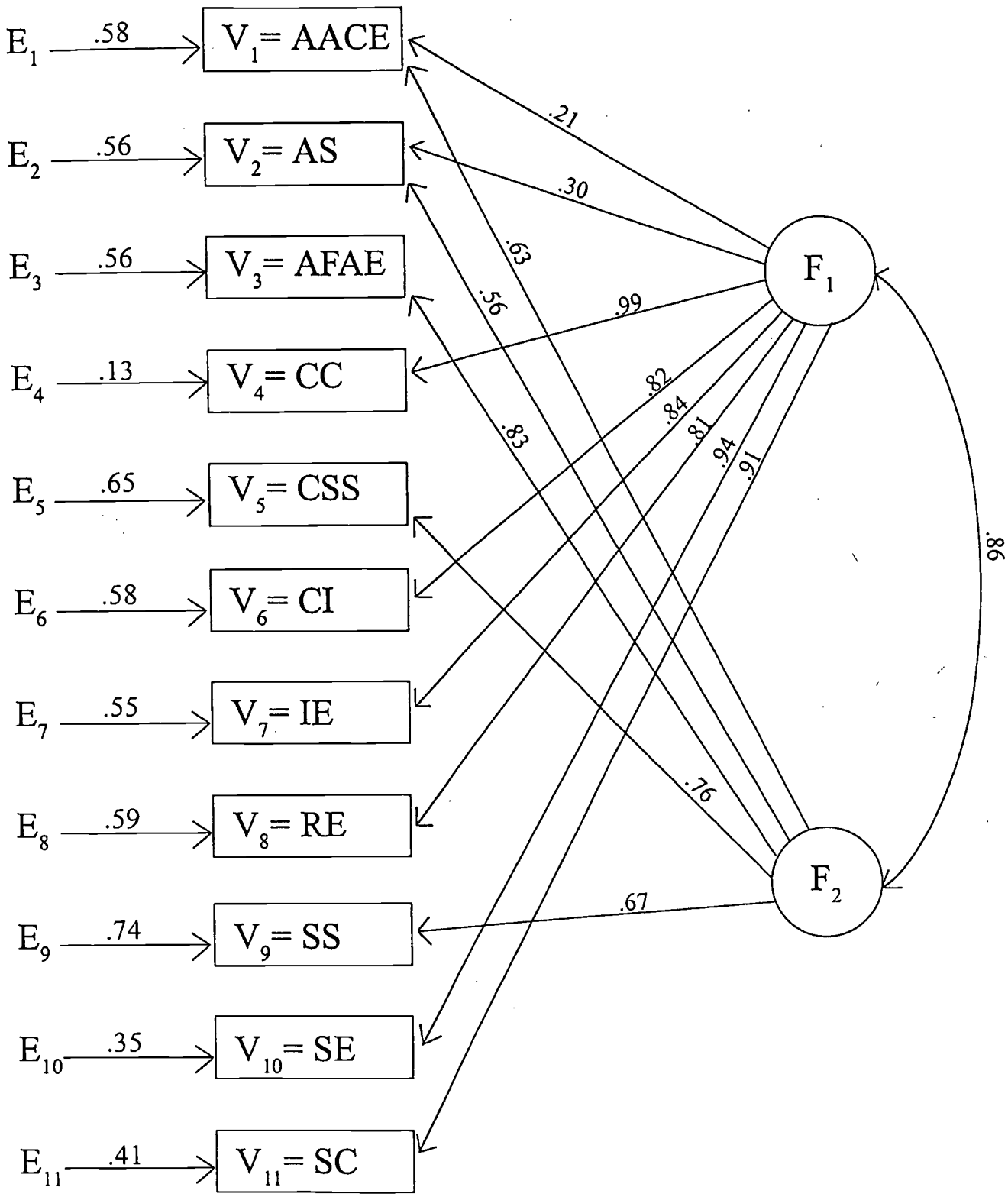

Model 6

Figure 6 - A two-factor measurement model which evolved from the exploratory factor analysis of performance gap data and was validated using the same data set

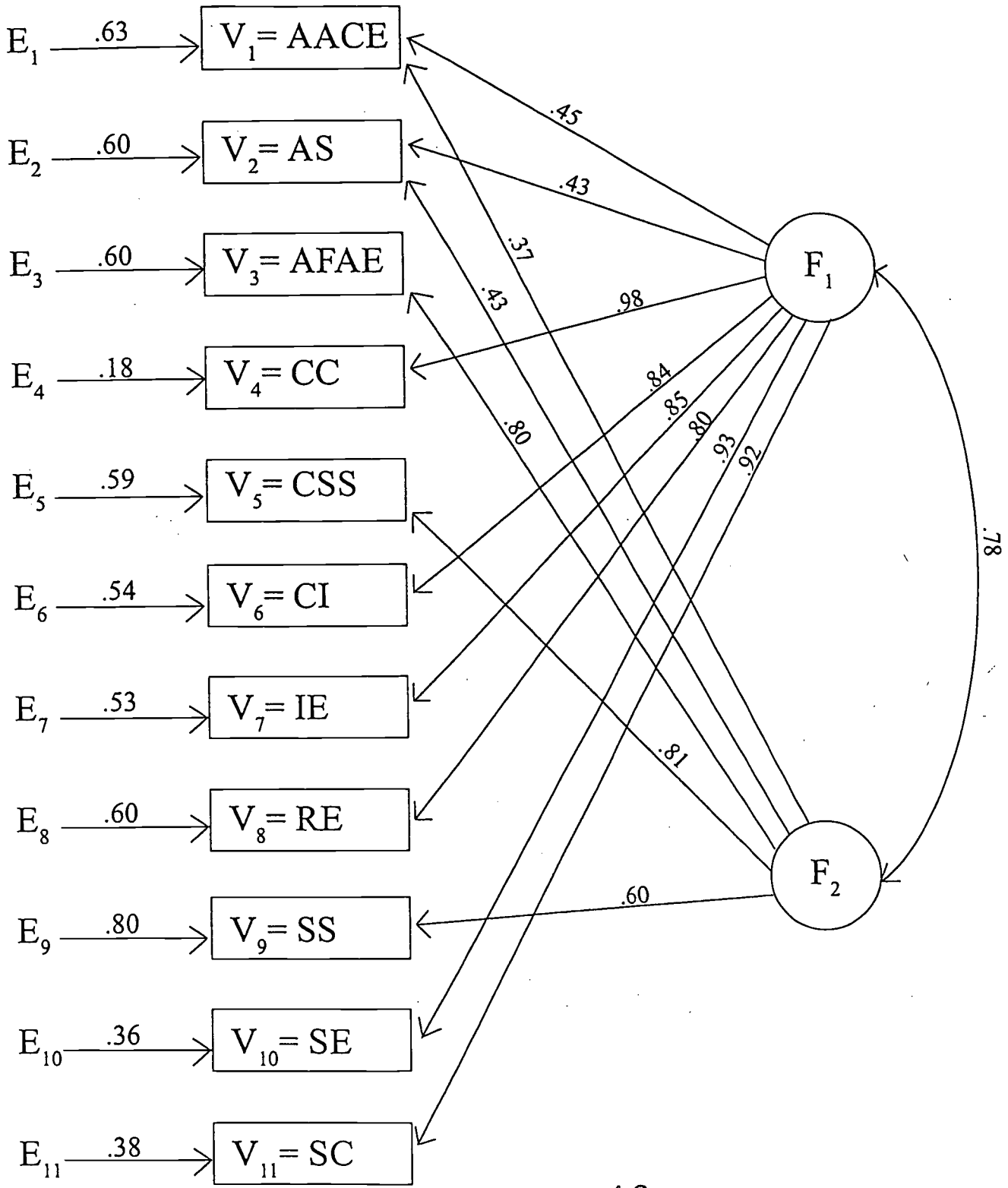

REFERENCES

Bentler, P. M. (1995). EQS Structural Equations Program Manual. Encino, CA: Multivariate Software, Inc.

Bentler, P. M. (1992). On the fit of models to covariances and methodology to the Bulletin. Psychological Bulletin, 112, 400-404

USA Group Noel-Levitz(1997) Student Satisfaction Inventory for Community, Junior and Technical College Version and Career and Private School version.

Gorsuch, R. L.(1983) Factor Analysis. London: Lawrence Erlbaum Associates.

Murphy, K. P., & Alexander, P. A. (1998). Using the learning and study strategies inventory-high school version with Singaporean females: Examining psychometric properties. Educational and Psychological Measurement. 58, 493-510

Olaussen, B. S., & Braten, I. (1998). Identifying latent variables measured by the Learning and Study Strategies Inventory (LASSI) in Norwegian college students. The Journal of Experimental Education. 67, 82-96.

Olejnik, S. F., & Nist, S. L. (1992) Identifying latent variables measured by the Learning and study strategies inventory (LASSI). The Journal of Experimental Education. 60, 151-159.

Olivarez, A., & Tallent-Runnels, M. K. (1994). Psychometric properties of the Learning and Study Strategies Inventory-High school version. The Journal of experimental Education, 62, 243-257.

TM032314

U.S. Department of Education
Office of Educational Research and Improvement (OERI)
National Library of Education (NLE)
Educational Resources Information Center (ERIC)

Reproduction Release

(Specific Document)

I. DOCUMENT IDENTIFICATION:

Title:	Identifying the Latent Structures of the Noel-Levitz Student Satisfaction Inventory (SSI): The Community, Junior, and Technical College Version.
Author(s):	JERRY OBIEKWE
Corporate Source:	Publication Date: 11/17/00

II. REPRODUCTION RELEASE:

In order to disseminate as widely as possible timely and significant materials of interest to the educational community, documents announced in the monthly abstract journal of the ERIC system, Resources in Education (RIE), are usually made available to users in microfiche, reproduced paper copy, and electronic media, and sold through the ERIC Document Reproduction Service (EDRS). Credit is given to the source of each document, and, if reproduction release is granted, one of the following notices is affixed to the document.

If permission is granted to reproduce and disseminate the identified document, please CHECK ONE of the following three options and sign in the indicated space following.

The sample sticker shown below will be affixed to all Level 1 documents	The sample sticker shown below will be affixed to all Level 2A documents	The sample sticker shown below will be affixed to Level 2B documents
PERMISSION TO REPRODUCE AND DISSEMINATE THIS MATERIAL HAS BEEN GRANTED BY SAMPLE TO THE EDUCATIONAL RESOURCES INFORMATION CENTER (ERIC)	PERMISSION TO REPRODUCE AND DISSEMINATE THIS MATERIAL IN MICROFICHE, AND IN ELECTRONIC MEDIA FOR ERIC COLLECTION SUBSCRIBERS ONLY, HAS BEEN GRANTED BY SAMPLE TO THE EDUCATIONAL RESOURCES INFORMATION CENTER (ERIC)	PERMISSION TO REPRODUCE AND DISSEMINATE THIS MATERIAL IN MICROFICHE ONLY HAS BEEN GRANTED BY SAMPLE TO THE EDUCATIONAL RESOURCES INFORMATION CENTER (ERIC)
Level 1	Level 2A	Level 2B
↑ ☒	↑ ☐	↑ ☐
Check here for Level 1 release, permitting reproduction and dissemination in microfiche or other ERIC archival media (e.g. electronic) *and* paper copy.	Check here for Level 2A release, permitting reproduction and dissemination in microfiche and in electronic media for ERIC archival collection subscribers only	Check here for Level 2B release, permitting reproduction and dissemination in microfiche onl

Documents will be processed as indicated provided reproduction quality permits.
If permission to reproduce is granted, but no box is checked, documents will be processed at Level 1.

I hereby grant to the Educational Resources Information Center (ERIC) nonexclusive permission to reproduce and disseminate this document as indicated above. Reproduction from the ERIC microfiche, or electronic media by persons other than ERIC employees and its system contractors requires permission from the copyright holder. Exception is made for non-profit reproduction by libraries and other service agencies to satisfy information needs of educators in response to discrete inquiries.

Signature: Jerry Obiekwe	Printed Name/Position/Title: JERRY OBIEKWE, ASSOCIATE PROFESSOR OF MATHEMATICS	
Organization/Address: The University of Akron-Wayne College 1901 Smucker Rd., Orrville, OH 44667	Telephone: 330-684-8763	Fax: 330-684-8989
	E-mail Address: Accessx@Uakron.edu	Date: 12/12/00

III. DOCUMENT AVAILABILITY INFORMATION (FROM NON-ERIC SOURCE):

If permission to reproduce is not granted to ERIC, or, if you wish ERIC to cite the availability of the document from another source, please provide the following information regarding the availability of the document. (ERIC will not announce a document unless it is publicly available, and a dependable source can be specified. Contributors should also be aware that ERIC selection criteria are significantly more stringent for documents that cannot be made available through EDRS.)

Publisher/Distributor:
Address:
Price:

IV. REFERRAL OF ERIC TO COPYRIGHT/REPRODUCTION RIGHTS HOLDER:

If the right to grant this reproduction release is held by someone other than the addressee, please provide the appropriate name and address:

Name:
Address:

V. WHERE TO SEND THIS FORM:

Send this form to the following ERIC Clearinghouse:

However, if solicited by the ERIC Facility, or if making an unsolicited contribution to ERIC, return this form (and the document being contributed) to:

ERIC Processing and Reference Facility
4483-A Forbes Boulevard
Lanham, Maryland 20706