DOCUMENT RESUME

ED 416 826 IR 018 721

AUTHOR	Koschmann, Timothy
TITLE	Computer-Supported Problem-Based Learning. Final Grant Report.
INSTITUTION	Southern Illinois Univ., Springfield. School of Medicine.
SPONS AGENCY	Fund for the Improvement of Postsecondary Education (ED), Washington, DC.
PUB DATE	1995-00-00
NOTE	54p.; For appendices 1-5, see ED 360 971, ED 392 440, ED 400 783, EJ 513 823, and EJ 514 954.
CONTRACT	P116B11208
PUB TYPE	Reports - Descriptive (141)
EDRS PRICE	MF01/PC03 Plus Postage.
DESCRIPTORS	*Computer Assisted Instruction; *Computer Software Development; Cooperation; *Courseware; Educational Technology; Federal Programs; Grants; Higher Education; *Learning Laboratories; *Medical Education; Problem Solving; Teaching Methods
IDENTIFIERS	*Collaborative Learning; *Problem Based Learning; Southern Illinois University; Technology Integration

ABSTRACT

Southern Illinois University developed an instructional approach for supporting collaborative, problem-based learning (PBL) in medical education. A succession of software tools were developed and refined to implement this approach, and a technology-enriched facility, the "Collaborative Learning Lab" (CLL) was designed. The paper describes two types of software developed: software for the presentation and management of material for teaching cases, and data sharing groupware for use in PBL meetings. Detailed observational studies were undertaken of instructional meetings--conducted both with and without technology. These studies informed the design by making visible aspects of current practice that failed to serve the underlying theories of learning and instruction, thereby identifying opportunities for innovation. The studies supported assessment by revealing the effects of the innovation on the instructional process. (Contains 36 references.) (Author/SWC)

Computer-Supported Problem-Based Learning

Final Grant Report

Granting Organization
Southern Illinois University
School of Medicine
Springfield, Illinois

PR/Award Number
P116B11208

Project Dates
Grant Start: August 1, 1991
Grant End: January 30, 1995

Project Director
Timothy Koschmann
Department of Medical Education
Southern Illinois University
P.O. Box 19230, M.S. 1217
Springfield, IL 62711-9230
(217)785-4396 (voice)
(217)524-0192 (fax)
tkoschmann@siumed.edu (e-mail)

FIPSE Program Officer
Sandra Newkirk

Grant Award

Year 1	$87,403
Year 2	$99,227
Year 3	$100,481
Total	$287,111

Table of Contents

ABSTRACT

In this project we have developed an instructional approach for supporting collaborative learning in medical education which we term "Computer-Supported Problem-Based Learning". We have developed and refined a succession of software tools to implement this approach and have designed a technology-enriched facility which we entitled the "Collaborative Learning Lab" (CLL). Detailed observational studies were undertaken of instructional meetings—conducted both with and without technology. These studies informed design by making visible aspects of current practice that failed to serve the underlying theories of learning and instruction, thereby identifying opportunities for innovation. They supported assessment by revealing the effects of the innovation on the instructional process.

EXECUTIVE SUMMARY

A. PROJECT OVERVIEW

We began this project with a simple question: In what ways might technology serve to support collaborative methods of instruction such as Problem-Based Learning (PBL)? Our answer is an instructional approach, which we have termed "Computer-Supported PBL."

B. PURPOSE

The concept of Computer-Supported PBL was first developed to address a number of practical problems associated with the operation of a PBL curriculum. The focus of the project has shifted, however, from attempting to fix a small list of perceived problems to trying to engineer an integrated approach to supporting "termless" learning (Koschmann, Myers, Feltovich, & Barrows, 1994). Information management technology can support termless learning in a variety of ways (Koschmann, in press-a). Fostering the development of skills for gathering and managing information has been a concern in medical education for some time (GPEP, 1984). Instruction utilizing Computer-Supported PBL leads quite naturally to the development of these skills necessary not only for undergraduate education, but also for success in later practice.

C. BACKGROUND

In the PBL curriculum at SIU, students work in small (6 to 8 is usually considered optimal) problem-solving teams with a faculty tutor/coach. The process begins by presenting a clinical patient problem to the team of students. The means by which this is done varies from school to school. At our institution, a paper-based simulation of the patient encounter such as the Problem-Based Learning Module (PBLM) (Distlehorst & Barrows, 1982) is used. PBLMs have the special advantage of enabling students to utilize the same process of inquiry used by clinicians in practice (Barrows, 1990). Using this representation of the case, the group goes through the steps of interviewing the patient, conducting a physical exam, and requesting laboratory tests and diagnostic procedures. The group proposes and agrees upon each piece of clinical data that they wish to request and one student, designated the "reader", locates the information in the PBLM and reads it aloud. Another student, taking the role of "scribe", records the thoughts and ideas of the group, organizing them in four columns on a blackboard: *Data* (clinical findings about the patient), *Hypotheses* (diagnostic theories), *Learning Issues* (identified knowledge deficiencies within the group) and *Actions* (plans for further evaluating the patient or for managing the patient's condition). There is active, coach-guided exploration and formulation of the problem, in which the students, relying on their pertinent prior knowledge, attempt to analyze the problem and to identify areas for further individual study.

When the team recesses, the students proceed to identify and utilize resources-person, print and electronic-which will provide the additional knowledge necessary for understanding and managing the patient's problem. Following such an episode of self-directed study, the PBL team is reconvened to apply the newly acquired information to the problem. At appropriate junctures, the group reflects upon the process and attempts to abstract generalizable findings from the case.

D. PROJECT DESCRIPTION

The central thrust of this project was to develop software to support Problem-Based Learning. Though several types of software were developed under this project, we will only describe two type here—software for the presentation and management of material for teaching cases and data sharing groupware for use in PBL meetings.

Software for creating, manipulating, and presenting teaching case data can be further subdivided into four categories: software used by curriculum planners to store and manipulate the complete repository of teaching cases, software designed to present cases to students in a fashion that is both authentic and motivating, software to represent the deliberations of the group (i.e., an electronic replacement for the "boards" used in the unaugmented PBL meeting), and, finally, software designed to support individual student note taking.

The second category of software developed under this project was data sharing groupware for use in PBL meetings. A special facility for conducting PBL meetings, known as the Collaborative Learning Laboratory (CLL) was designed and implemented. While working in the CLL, each meeting participant is provided with a computer workstation. There is a large multi-scan display viewable by all members of the group which can project the contents of any participant's screen. Each participant, therefore, views two screens—one public and shared by all, one private. When meetings are conducted in the CLL, participants require a means of conversationally sharing data. A window-based chat program, known as *e-talk* , was developed to serve as a convenient platform for this kind of activity. Text typed on one workstation can be instantly displayed on the other participant's screens.

E. EVALUATION

The project concluded with an evaluation trial conducted within the PBL curriculum at Southern Illinois University School of Medicine. One PBL group was followed for two months while they worked in a traditional PBL meeting format, unaugmented with technology. The group was then filmed working through two cases in a prototype implementation of the CLL. All told, the group held six meetings in the CLL, each of 2-3 hours in duration.

This curricular evaluation demonstrated that productive meetings could be conducted in technology-enriched environments such as the prototype CLL. The students were able to utilize the electronic case presentation application with very little training. Implementing an electronic replacement for the boards (i.e.,

View #3), on the other hand, turned out to be a more difficult undertaking than we had originally anticipated. Though we were able to engineer an improvised solution, some more thought needs to be devoted to how to support this need. The program for conversation data sharing (e-talk) was used heavily within the observed meetings. The primary use was for sharing information about the case by the "reader". The ability to immediately provide copies of long textual results (e.g., consultant's reports, past medical histories) to all members of the group by broadcasting through e-talk, was considered by the students to be one of the major advantages of exploring a case in the CLL. From the students' perspective, having a personal computer for use both within and between meetings was the biggest benefit of this approach. More thought needs to be devoted to how to support student learning between meetings.

F. CONCLUSIONS

This project began with a simple question: In what ways might technology serve to support collaborative methods of instruction such as PBL? Though substantial progress has been made toward answering this original question, we are now confronted with a new list of intriguing questions. These include: What is it that makes a PBL meeting instructionally productive? Are there less expensive alternative designs for rooms and furnishings that would work just as adequately? Is there a way of more readily and less expensively producing more video-based teaching cases? What implications does this new approach to supporting PBL meetings have for conducting meetings in which participants are no longer necessarily co-located? Finally, how does this body of work generalize to PBL curricula at other medical schools? In other professional programs (e.g., engineering, business management)? To other forms of collaborative instruction?

FINAL REPORT

A. PROJECT OVERVIEW

We work within a setting which has not only adopted Problem-Based Learning as an instructional method, but one which has also endeavored to serve as a center for the promotion and dissemination of the method. We began this project with a simple question: In what ways might technology serve to support collaborative methods of instruction such as PBL?

In the ensuing three years, we have developed an approach, which we term "Computer-Supported PBL". We developed and refined a succession of software tools and designed and created a technology-enriched facility for conducting PBL meetings which we termed the "Collaborative Learning Lab" (CLL). Along the way we have learned a lot about how PBL meetings work—both with and without technology. Our work in this area has interesting implications, not only for other medical schools with problem-based curricula, but for programs in other disciplines and other levels of instruction that practice collaborative methods of instruction. This project, therefore, represents an example of the emerging area of work known as Computer-Support for Collaborative Learning (CSCL) (Koschmann, 1994; Koschmann, in press-b). It started with a seemingly simple question and in the process of developing an answer to that question, we have generated a host of others, all still in need of answers.

B. PURPOSE

The concept of Computer-Supported PBL was first developed to address a number of practical problems associated with the operation of a PBL curriculum. We described these in the original proposal as follows:

> It is not easy to find qualified tutors who can guide tutorial meetings without imposing their views. It is difficult for the tutor to obtain (and maintain) a clear sense of each student's understanding of the current problem as it is discussed by the group. There is a need to maintain careful records of the tutorial group's deliberations, but maintaining such a record is costly in terms of group time and effort. In the PBL method, the details of a clinical case to be studied are not initially provided to the student, but are instead revealed through a process of inquiry. The mechanics of simulating an encounter with a patient can be quite cumbersome. Finally, a major component of PBL is helping students to acquire skills for gathering knowledge, but there are few opportunities for modeling appropriate information gathering skills within the tutorial meeting. (p. 3)

Though seeking ways of appropriately using technology within PBL remains central to the project, this list of ways of actually employing the technology has evolved over time. For example, it would now seem overly optimistic to suggest

that technology will ever take the place of a skilled tutor/coach[1] or make an adequate tutor/coach of an inadequate one. On the other hand, the notion of supporting the work of the group asynchronously outside of the PBL meetings, though not a part of this original list, has become an important area of interest.

More generally, the focus of the project has shifted from attempting to fix a small list of perceived problems to trying to engineer an integrated approach to supporting "termless" learning (Koschmann et al., 1994). The Principle of Termlessness has been described as follows:

> Learning of rich material is termless; instruction should instill a sense of tentativeness with regard to knowing, a realization that understanding of complex material is never "completed", only enriched, and a lifelong commitment to advancing one's knowledge. (p. 238)

Information management technology can support termless learning in a variety of ways (Koschmann, in press-a). Fostering the development of skills for gathering and managing information has been a concern in medical education for some time (GPEP, 1984). Instruction utilizing Computer-Supported PBL leads quite naturally to the development of these skills necessary not only for undergraduate education, but also for success in later practice.

Implementing Computer-Supported PBL, however, is, and probably will continue to be, a non-trivial undertaking, even for schools that already have well-established PBL curricula. Refitting traditional classrooms to support one-to-one student/computer ratios can be very expensive. Furthermore, the available technology is changing very rapidly. Just maintaining an awareness of the newly emerging tools is difficult; maintaining up-to-date facilities is even more so. Finally, preparing faculty to serve as tutor/coaches in technology-enriched environments creates the need for new forms of faculty training. In a recently submitted proposal (Proposal # P116B50516), we presented a plan designed to begin to overcome some of these obstacles to widen implementation of this approach.

C. BACKGROUND AND ORIGINS

Southern Illinois University (SIU) School of Medicine has provided a fertile environment for the development of the approach that we now term 'Computer-Supported PBL'. The School of Medicine at SIU is relatively new, having only been established in 1970. In the twenty-five years since its founding, however, it has developed a reputation for innovation in medical education (ACME-TRI, 1993).

---

[1]The faculty member participating in a PBL meeting is traditionally referred to as the "tutor". This is an unfortunate choice of title, however, since it suggests a role which is largely at odds with the perceived function of that individual. Alternative titles such as "animateur" (Kurtz, Wylie, & Gold, 1990, p. 809), "facilitator or guide" (Barrows, & Tamblyn, 1980, p. 83) have been proposed. We prefer the term "learning coach" or simply "coach" which implies a somewhat different role for the group facilitator. Because the traditional terminology is so deeply entrenched, we will refer to the faculty member in this report as the "tutor/coach".

Though SIU only began admitting students into its PBL track in 1990, it has been recognized as a center for the development and promotion of PBL for over a decade. The Department of Medical Education annually conducts numerous workshops related to all aspects of implementing and conducting PBL curricula. It has also been a center for the design and implementation of case-based teaching materials (Distlehorst & Barrows, 1982). Faculty from around the world have received training in PBL tutoring techniques at SIU. Teaching cases developed at SIU have also been used at numerous other institutions.

In the curriculum at SIU, students work in small (6 to 8 is usually considered optimal) problem-solving teams with a faculty tutor/coach. As summarized in Figure 1, the cycle with respect to a teaching case has five subcomponents. In medical education, the process begins by presenting a clinical patient problem to the team of students. The means by which this is done varies from school to

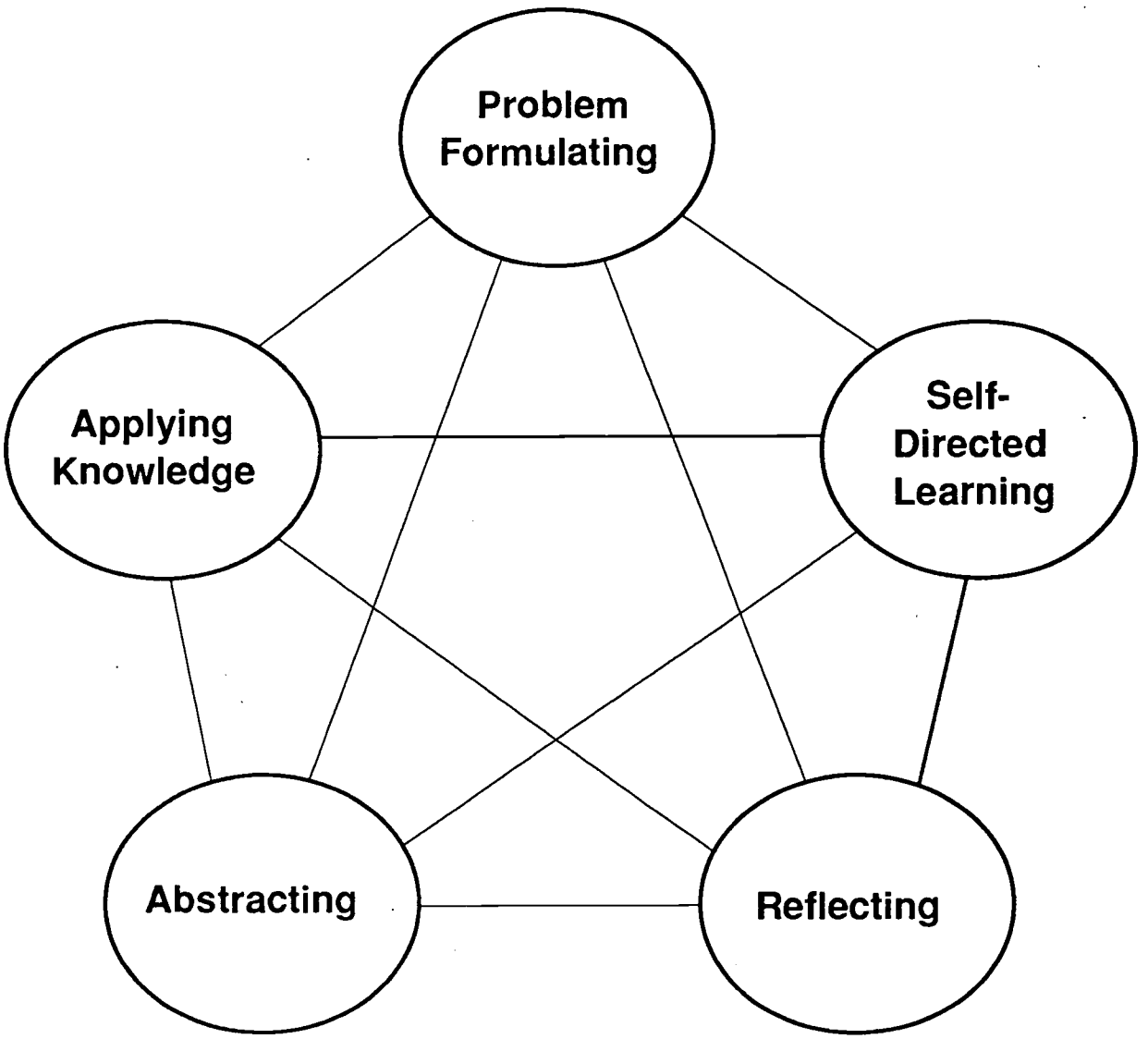

Figure 1: Components of the PBL Method

school. At our institution, a paper-based simulation of the patient encounter such as the Problem-Based Learning Module (PBLM) (Distlehorst & Barrows, 1982) is used. PBLMs have the special advantage of enabling students to utilize the same process of inquiry used by clinicians in practice (Barrows, 1990). Using this representation of the case, the group goes through the steps of interviewing the patient, conducting a physical exam, and requesting laboratory tests and diagnostic procedures. The group proposes and agrees upon each piece of clinical data that they wish to request and one student, designated the "reader", locates the information in the PBLM and reads it aloud. Another student, taking the role of "scribe", records the thoughts and ideas of the group, organizing them in four columns on a blackboard: *Data* (clinical findings about the patient), *Hypotheses* (diagnostic theories), *Learning Issues* (identified knowledge deficiencies within the group) and *Actions* (plans for further evaluating the patient or for managing the patient's condition). There is active, coach-guided exploration and formulation of the problem, in which the students, relying on their pertinent prior knowledge, attempt to analyze the problem and to identify areas for further individual study. When the team recesses, the students proceed to identify and utilize resources-person, print and electronic-which will provide the additional knowledge necessary for understanding and managing the patient's problem. Following such an episode of self-directed study, the PBL team is reconvened to apply the newly acquired information to the problem. At appropriate junctures, the group reflects upon the process and attempts to abstract generalizable findings from the case.

I think it is fair to say that the educational world was not initially very receptive to the idea of Computer-Supported PBL. When our group began to work in this area there were two prevailing views on the idea of introducing computers into PBL meetings. On one side were the devoted advocates and practitioners of PBL. They tended to view PBL as an already ideal form of instruction and registered fears that introducing technology could only lead to a deterioration of the method. On the other side were the opponents of PBL who favored a return to more traditional, teacher-centered forms of instruction. Because of their opposition to the underlying method, they had little interest in an approach that would augment this method with technology.

In the intervening five years many things have changed. PBL itself has become much more widely accepted. Though it is still true that only a handful of schools have curricula that are entirely problem-based, the curricula at virtually all North American medical schools have incorporated aspects of PBL in one way or another. Numerous schools have implemented problem-based alternate tracks in the pre-clinical years and many schools are also introducing PBL experiences into their clerkships and early clinical training. Furthermore, PBL and other forms of collaborative learning are being adopted with increasing frequency in professional education outside of the health sciences. It is utilized in schools of architecture (Donaldson, 1989; Maitland, 1991), engineering (Cawley, 1989), law (Winsor, 1991; Kutz, Wylie, & Gold, 1990), business management (Stinson, & Milter, 1995), dentistry (Tedesco, 1990), nursing (Higgins, 1994),

social work (Heycox, & Bolzan, 1991), veterinary medicine (Edmundson, 1994), and other areas of professional training (Boud, 1985; Lovie-Kitchen, 1991; De Virgilio, 1993).

Concurrent with this awakening of interest in collaborative learning, the notion of using technology to support these methods of instruction has become more widely accepted. Computer Support for Collaborative Learning (CSCL) is a rapidly growing area of research and development (Koschmann, 1994; in press-b). Work in this area has attracted the interest of researchers from around the world. The first international conference on CSCL will be taking place this fall at Indiana University. Computer-Supported PBL can be seen as one of a variety of approaches being explored to use technology in collaborative methods of instruction.

D. PROJECT DESCRIPTION:

We became interested in the concept of using computers in PBL following a regional meeting on computers in medical education sponsored by Apple Computer and held in Chicago in January of 1990. A proposal was submitted to the Apple Academic Development Grant program in the summer of 1990 resulting in the receipt of an equipment grant later that year. We presented some of our preliminary ideas about how this might be achieved later that summer at a conference at Snowbird (Koschmann, Myers, Feltovich, & Barrows, 1990) and later that fall at the Annual Symposium on Computer Applications in Medical Care (SCAMC) (Koschmann, Feltovich, Myers, & Barrows, 1990; Myers, Barrows, Koschmann, & Feltovich, 1990). A preliminary proposal was submitted to FIPSE in October 1990 followed by a full proposal in March of 1991.

Software Deliverables. The central thrust of this project has been to develop software to support Problem-Based Learning. Three types of software have been developed under this project—software for the presentation and management of material for teaching cases, data sharing groupware for use in PBL meetings, and general-purpose software to support research into how PBL meetings are conducted.

The first category can be further subdivided into four "views". Each of these views (summarized in Table 1) is maintained and used by different parties, captures different information about the case, and requires a different computer-based representation. These views represent four facets of what we mean by Computer-Supported PBL. Although some of the information featured in the four views may be held in common, there is other information which is always unique to particular views. It can be argued, therefore, that each view is essential and that none can be eliminated without loss to the process. View #1 is used primarily by curriculum planners to build new cases, to update old cases, and to select cases for use within the curriculum. In this view, the data for all of the teaching cases is pooled into a common repository. This view has an arity of many, since each case is not seen as a singularity, but as a member of a larger set of cases comprising the casebase. This can be seen by the fact that the data for any one case is really a composite of information—some of which is shared

Table 1. Four Views of a Teaching Case

	View #1	View #2	View #3	View #4
Arity	many	one	one	many
Purpose	casebase development	case presentation	recording the deliberations of the group	personal notetaking
Creator/ Owner	case authors/ curriculum planners	curriculum planners	group	student
User	curriculum planners	student (inquiring on behalf of group)	group/ student	student
Locus	fileserver	student's machine	fileserver	student's machine

across many cases (e.g., the cost of a laboratory test) and some of which is specific to the case (e.g., a laboratory result value). View #2 is designed to present the case to the PBL team in a fashion that is both authentic and motivating. Each case is treated as a singularity, not unlike an encounter with a real patient in a clinical setting. View #3 is meant to supplant the "boards" used in the unaugmented PBL meeting. It includes a summary of the pertinent facts for the case under study, theories about the underlying problem, and a list of "learning issues" for self-directed study outside of the meeting. Views #2 and #3 represent resources of the group—one constructed for the group, the other constructed by the group. Both explore the data within the restricted context of the case itself, which is to say that they have an arity of one. In contrast, View #4 is constructed by the individual student for the exclusive use of that student. In addition to a summary of the pertinent information on the case itself, it contains notes from the student's self-directed study and pointers to resources that were used. Like View #1, View #4 has an arity of many—abstracted findings may be linked to multiple cases. In reviewing their notes, students must be able to integrate knowledge across the full set of cases they have encountered.

The second category of software developed under this project was data sharing groupware for use in PBL meetings. A special facility for conducting PBL meetings, known as the Collaborative Learning Laboratory (CLL) was designed and implemented. A conceptual view of the CLL is shown in Figure 2. The participant workstations consist of a laptop computer (Macintosh

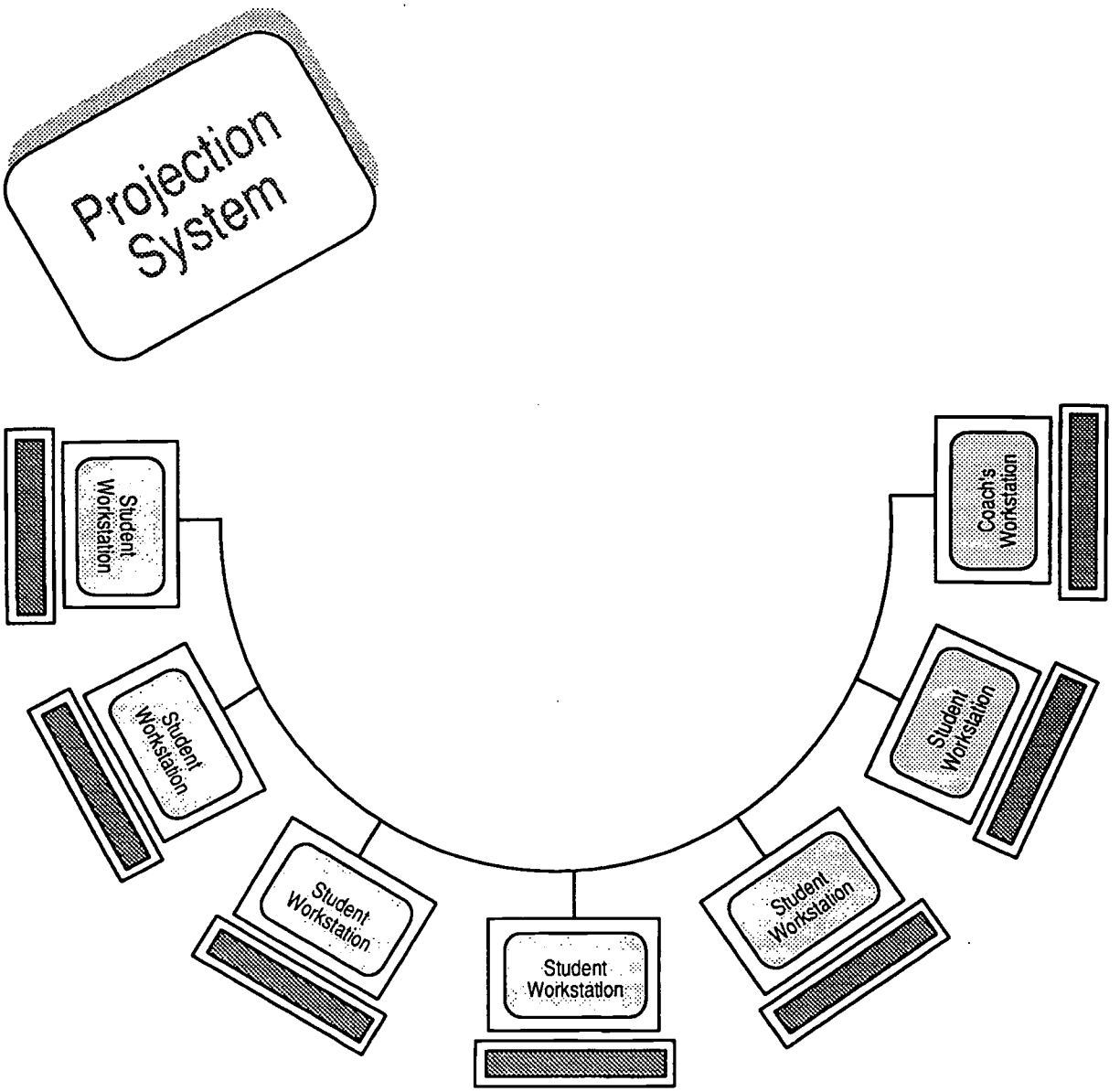

Figure 2: Conceptual View of the Collaborative Learing Lab (CLL)

Powerbook) and a docking station. While working in the CLL, students can insert their Powerbook into a docking station thereby joining the local-area network and enabling the use of a full-sized keyboard and a large color monitor. There is a large multi-scan display viewable by all members of the group which can project the contents of any participant's screen (Ryan & Koschmann, 1994). The projection system can also be used to display video output from a variety of sources (e.g., videodisc, remote video cameras, video conferencing equipment). Each meeting participant, therefore, views two screens—one private and one shared. Because isolating meeting participants behind large CRTs would disrupt face-to-face interaction, specially-designed desks are used to ensure that each member of the group has as an unrestricted view of all other members and of the shared screen (see Figure 3). The local-area network in the CLL is connected to the school-wide network permitting meeting participants to access the electronic

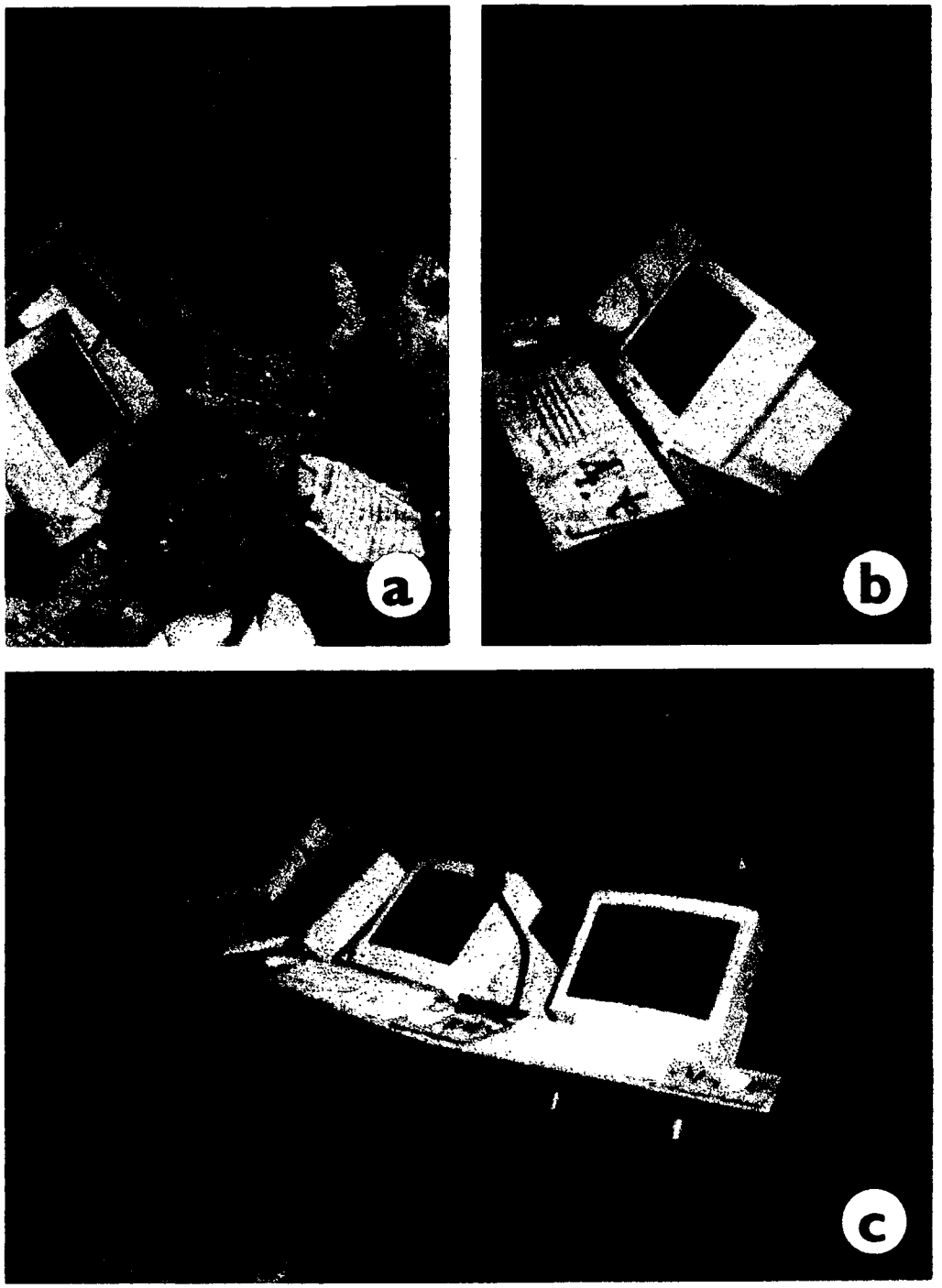

Figure 3: A prototype of the Collaborative Learning Laboratory (CLL). (Moving clockwise from upper left (a) shows a PBL meeting being conducted in the CLL, (b) shows the specially-designed desks, and (c) reveals one of the docking stations situated beneath the desk.)

resources of the library and Internet.

When meetings are conducted in the CLL, participants require a means of conversationally sharing data. A window-based chat program, known as *e-talk* (Koschmann, 1993a), was developed to serve as a convenient platform for this kind of activity. Text typed on one workstation can be instantly displayed on the other participant's screens. The program supports two types of windows: a window in which to type messages (termed a "dispatch window") and a window in which received dispatches are displayed (termed a "listener window"). Both dispatch and listener windows offer simple wordprocessing capabilities, enabling the user to compose, dispatch, and annotate messages. Each user may have any number of each type of window.

A variety of conferencing topologies can be constructed on top of these basic elements (Koschmann, 1993a). Numerous instructional activities can be implemented in the CLL using the e-talk system (Koschmann, 1993a). For example, group discussion can be stimulated using the technique of "parallel polling" (Koschmann, et al., 1994). At appropriate junctures in the exploration of the case, the faculty tutor/coach can request that students turn to their computers and compose a brief response (e.g., "summarize the case as we understand it so far", "state your leading diagnostic hypothesis and defend it", "specify what you would do next if this were your patient"). This enables the tutor/coach to assess individual performance in a group setting. Other potential uses of this software include disseminating case-related data to the students and facilitating note taking. It should be noted that it has never been our intention for e-talk to serve as the primary means of mediating interaction in a meeting. As before, the interaction will continue to be mediated through spoken discourse and through the shared written artifacts. Consequently, e-talk only provides an auxiliary channel for exchanging information about the case, serving as what we have called "a private channel in a public forum" (Koschmann, et al., 1994).

The third and final category of software was general-purpose software to support the evaluative and research activities. Much of the evaluative research done in this project depended upon the use of video recording technology to document events occurring in PBL meetings. Most of our effort in developing research software focused on creating software to support videoanalysis. The GT2000 program (Ryan, 1993) was developed to support annotation of a video record and to facilitate finding segments of interest on the videotape.

Project Milestones. In the first year of the project, a preliminary database implementing view #1 of Table I was created. A small number of cases were entered into this database, known as the Teaching Case Library (TCL). A HyperCard application, known as the Patient Simulation Stack (PSS), was also implemented in the first year. This was our first attempt at implementing view #2 from Table I. The design of the PSS was based on the PBLM, an earlier paper-based format used for case presentation (Distlehorst, & Barrows, 1982). Rather than selecting items from menus, users must generate keywords for each question that they would like to ask or for each examination item or laboratory test that they would like to request. Some work was done that year in preparing

video materials for a case to be presented through the PSS. A prototype of the interface for the e-talk program was developed though it was only operational on a single machine. Work began on GT2000, a program for doing videoanalytic work. Late in the summer of 1991 a poster was presented at the International Conference on the Learning Sciences. It laid out the basic goals of the project. Later that fall, a workshop was done in Carbondale with sponsorship from Xerox Foundation and Xerox Palo Alto Research Center. It focused on theory, design, and practice of CSCL applications (Koschmann, 1992). Also, a symposium was organized and presented at the Annual Meeting of the American Educational Research Association in the spring of 1992 to discuss learning theories associated with CSCL (Koschmann, 1994). A workshop on CSCL was held in the fall of 1992 at the Ontario Institute for Studies in Education (OISE) (Koschmann, Newman, Woodruff, Pea, & Rowley, 1993).

In the fall of the second project year, the GT2000 program was demonstrated at the FIPSE Project Director's Meeting. Documentation was developed for the TCL. Procedures were developed for exporting case information from the TCL into Patient Simulation Stacks. A design for a dispatch server to be used with the e-talk program was developed. The e-talk program was demonstrated at the Annual Meeting of the American Educational Research Association in the spring of 1993 (Koschmann, 1993a).

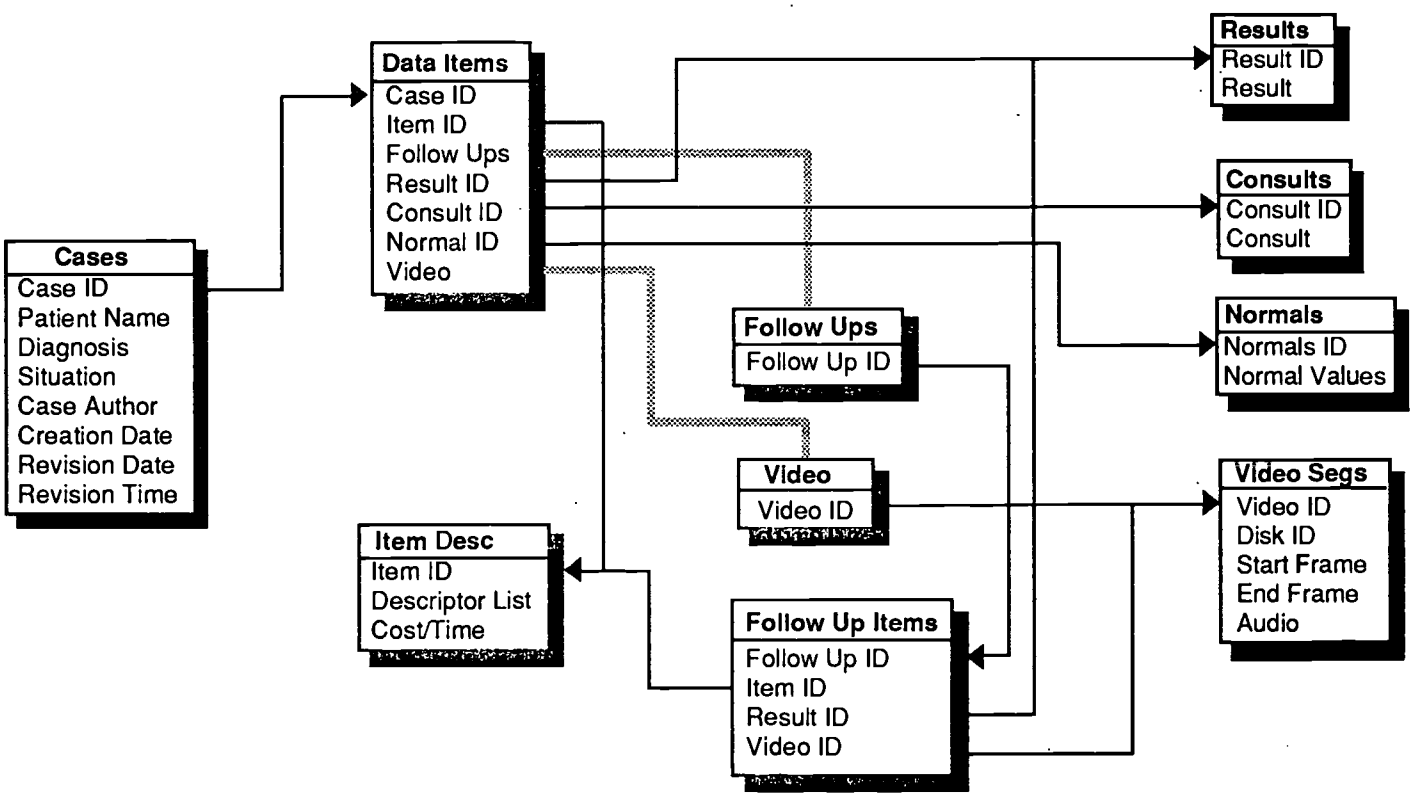

Figure 4: Structure of the Teaching Case Library (TCL)
(from Grissom & Koschmann, 1995).

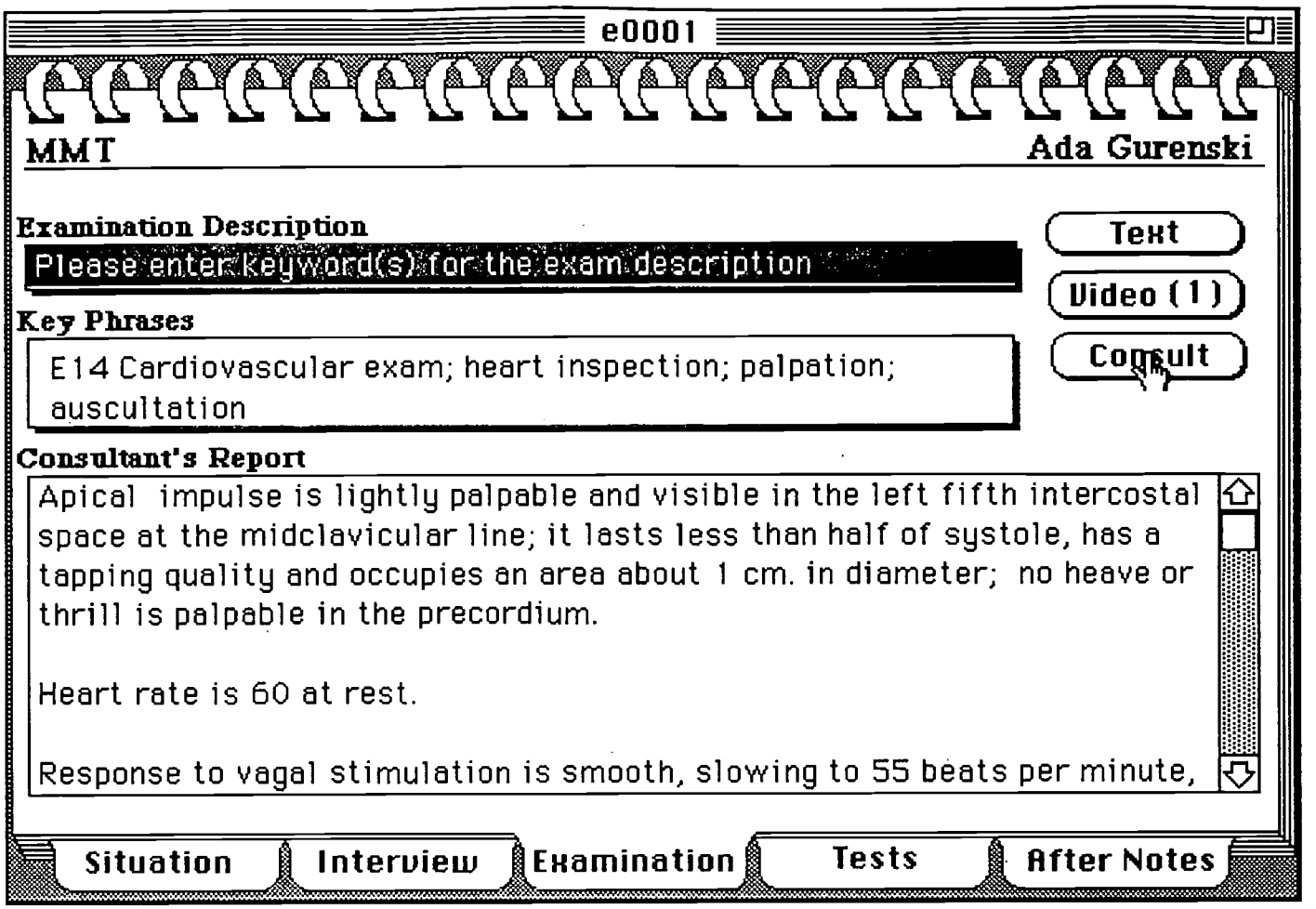

Figure 5. A data screen from an MMT case presentation

A brief presentation on computer-mediated communication (CMC) was also given at a research symposium in Amsterdam (Koschmann, 1993b).

The final year of the project saw extensive revisions to the previously developed software. The TCL was partially re-designed to simplify the entry of new cases. An entity-relationship diagram showing this revised design can be seen in Figure 4. Approximately a dozen additional teaching cases were added to the database. The PSS was re-designed and renamed the MMT. The MMT was designed to provide a more robust interface for student queries. Like the PSS before it, the MMT was based conceptually on the PBLM. As shown in Figure 5, for each selected data item a series of "resources buttons" appear on the right side of the screen. These buttons can be used to see result values, to view video clips, to examine normal values for the laboratory, or to ask follow up questions about the item (Grissom, & Koschmann, 1995). Extensive revisions were also made to the e-talk program to improve its reliability in the classroom. A HyperCard tool known as the "Scribe Stack" was developed to serve as the computer-based analog to the shared boards of the PBL meeting, thereby implementing view #3 of Table I. A presentation describing the project was made at the 1994 Annual National Educational Computing Conference (Ryan, & Koschmann, 1994). A panel on case-based instruction was organized for the 1994 Annual Meeting of the Cognitive Science Society (Collins, Holyoak, Klein, Kolodner, & Koschmann, 1994).

E. EVALUATION/PROJECT RESULTS

A second major facet of this project involved doing detailed observational studies of PBL meetings. These studies were done both to support design and to facilitate evaluation. The studies informed design by making visible aspects of current practice that fail to serve the underlying theories of learning and instruction, thereby identifying opportunities for innovation. They support assessment by revealing the effects of the innovation on instructional practice.

A similar analytic framework was applied in all of our studies. Within each study, we endeavored to construct an ethnographic account, a "thick description" (Guba, & Lincoln, 1981), of the meeting process, one which would provide a firm foundation upon which to develop our theories. In doing so, we focused our attention on what it is that makes these meetings educationally productive, that is on *exemplary instructional practice*. In a recently published article (Koschmann, et al., 1994) we attempted to list some of the principles of learning and instruction that underlie the PBL method. To be understood, however, these constructs (e.g., Multiplicity, Activeness, Authenticity) must be grounded in the situated practices of the PBL meetings themselves. It is this focus on exemplary practice that enables us to apply an otherwise descriptive method to the prescriptive task of designing instructional tools and modifying instructional practices. Finally, we strove within our approach to understand the process from a *participant's viewpoint*. In so doing, we focused on participants' talk, the artifacts that support and are produced within the meetings, and the participants' own accounts of the meetings.

Our research methods have been described in several presentations including a talk at the 1994 FIPSE Project Director's Meeting, a workshop in Toronto on design and ethnographic research (Koschmann, & Ryan, 1992), and a workshop in Milan on ethnography in practice (Koschmann, 1993c). All studies involved videotaping some series of PBL meetings. When this was done, prior written permission for taping was secured from all participants. Using the video record, transcripts were prepared for the meetings. These tapes and transcripts are then studied collaboratively in meetings we term "Listening Sessions." Students and faculty are often invited to participate in these sessions to provide an "insiders" perspective on what is occurring on the tape. An example of a listening session was done at the 1994 AERA meeting (Conlee, & Koschmann, 1994).

Our first study was done very early in the project in October of 1991. We videotaped a group of second year medical students during their deliberations with respect to a single neurological case. The group consisted of five female students and one male student, all white. The tutor/coach was a resident who has subsequently become a member of the clinical faculty. The group's discussions took place in three separate meetings over a period of approximately a week. Each of these meetings was about two hours in duration, resulting in the production of about six hours of tape. The study had several purposes: 1) to gain some insight into the possible problems that one might encounter when videotaping PBL meetings, and 2) to begin to document what actually occurs in these meetings.

Our next study took place in the fall of 1992. We followed a newly-enrolled group of first-year students through the first unit of the PBL curriculum. This entailed 17 meetings of approximately two hours each over an elapsed period of five weeks. The group consisted of four female and two male students, all white. The tutor/coach was an experienced and highly-regarded member of the PBL faculty. Like the first study, this study was undertaken to help us understand how PBL meetings are enacted in practice. We chose to follow a group just entering the curriculum to see how skills for working in this type of setting are initially acquired.

These two preliminary studies were done to help us better understand how PBL meetings are conducted in practice. In the third year of the project, two additional studies were done to look at the effects of the designed technology on the meeting process.

The first was a one-week usability trial involving six, paid students from a local nursing school. All students were in the third year of the nursing program and had no prior experience with PBL. They ranged in age from 21 to 46, with a median age of 24 years. All were white and there were five women and one man. They had varying amounts of prior experience with computers—some having no experience at all, others having worked extensively with DOS machines. One of the students owned a personal computer. None had prior experience with Macintosh computers. The tutor/coach was a clinical faculty member from the medical school who had previously taught in the PBL curriculum (he also served as the tutor/coach in the first study done in the fall of 1991).

The special computer desks shown in Figure 3 were not available for this trial, a large circular meeting table was used instead. Only one workstation, consisting of a Powerbook and docking station, was available for use in this trial. A variety of other Macintosh processors were used to serve the rest of the group. Because we did not have enough Powerbooks to accommodate all of the students, they were only permitted to use the computers in the meeting room. A 43" Sony, table-top rear-projection system was used for the shared monitor. It was attached to a videodisc player and to one of the student workstations. The group conducted three, two-hour meetings in the CLL exploring a single teaching case (a neurological case currently used in the second year of the medical school curriculum). This particular case has been augmented with video covering the interview and physical examination.

The purpose of this study was to test the reliability and usability of the CLL software in a teaching situation. Though there were a number of small problems along the way, the software was sufficiently reliable to enable the meetings to go on unimpeded. The fact that the students were able to work productively in the CLL, given their limited prior experience with the computers and the relatively brief duration of the study, speaks favorably to the usability of the software (and to the skill with which the tutor/coach performed his role). In an exit interview (conducted collectively), all students indicated their approval for the design. They also expressed a wish a similar approach be employed to support their studies at the nursing school. This study had a number of serious limitations.

The duration of the study (which was dictated by the schedules of the students, the tutor/coach, and the meeting space) was too short to draw any conclusions about the effects of long-term use. Though the students' lack of experience with computers proved to be less of a problem than anticipated, their lack of prior experience with PBL may have interfered with their exploration of the case. Generalizing from this experience to the medical school curriculum was made difficult by a number of factors—the fact that, unlike real students, these students were compensated for their participation, that their academic and career advancement were not tied to success in this endeavor, and simply by the large difference in the ways in which nursing and medical students are trained.

The second evaluative study was begun in October of last year and ended in mid-December (we requested a no-cost extension to the original grant to conduct this study). It involved six first-year medical students enrolled in the PBL track at SIU. The trial ran the duration of the second unit of the PBL curriculum which is devoted to understanding the basic mechanisms of cardiovascular and renal function. The students ranged in age from 22 to 33, with a median age of 29 years. The group consisted of three women and three men, five white and one African-American. All of the students had prior experience with computers and two owned personal computers. All had received the standard orientation to using the Macintosh given to all incoming medical students at the beginning of the first year. All had volunteered to be members of an "experimental" group for the duration of the unit. The tutor/coach was a senior faculty member from one of the basic science departments. He was not only an experienced PBL coach, but also served as the Coordinator for this unit. He has programmed on a variety of hardware platforms and can be considered a computer expert. All participants consented in writing to be videotaped within the study.

A prototype of the CLL was assembled in a private room in the university library in Carbondale. Photographs of this facility can be seen in Figure 3. Five of the students used Powerbooks inserted in docking stations. The sixth student used a Quadra workstation in the meetings and a non-dockable Powerbook outside of the meetings. The coach also used a Quadra workstation in the meetings. The coach's workstation was directly connected to a Sharp LCD panel which, in conjunction with an overhead projector, was used to project the contents of his computer screen onto a wall-mounted screen. Using a commercial program (Timbuktu), the coach was able to observe (and thereby project to the group) the contents of any of the students' screens.

Two weeks of the unit (Week 6 and Week 11) were devoted to examinations. In the remaining 9 weeks of the 11-week unit, the group managed to explore 11 teaching cases. The first six cases were done in a standard tutorial room and the meetings devoted to these cases were conducted in the traditional way. We videotaped these meetings to help acquaint ourselves with the group and their work habits. A week before the group was scheduled to move into the prototype CLL, each of the students was issued a Powerbook. The group then did one case in the prototype CLL followed by three cases in the standard tutorial room and returned to do a final case in the CLL. All told, the group held six meetings in

the CLL, each of 2-3 hours in duration.

As an implementation of View #2, the MMT was quite successful. Since there was no video available for the two cases used in the evaluation study, clinical data was presented textually, as is done in the PBLM. As in the traditional PBL meeting, the task of interrogating the case representation (in this case the MMT) was assumed by one of the students for each of the cases. In the PBL meeting unaugmented with technology, one student assumes the role of "scribe" and maintains the notes for the group on a whiteboard. The purpose of View #3 in Table I is to provide an electronic medium for recording these notes. To serve this need, a HyperCard application known as the "Scribe Stacks" was implemented. Shortly after moving into the CLL, however, the group decided that maintaining the notes online was too much work for one person to do. Consequently, they distributed this task to four members of the group—one keeping track of data for the case, one maintaining the list of diagnostic theories, one maintaining a list of learning issues, and the fourth maintaining a to-do list. Under this scheme, virtually every student has some task to perform with respect to exploring the case.[2] Unfortunately, the Scribe Stacks were not designed to work in this way. As a fill-in solution, a commercial group-editing program known as Aspects was introduced late in the study. It allowed multiple users to work collaboratively on a common document. The "boards" (i.e., View #3) were implemented by establishing an Aspects "conference" with separate documents to represent each of the standard sections of the board. The coach kept a live copy of each document on his workstation which was projected on the shared screen. Thus, an up-to-date copy of each of these documents was continuously available for reference by the group.

The following are some of the preliminary findings from the most-recent evaluative study:

1) **Teaching case presentation.** The search facilities implemented in the MMT (Grissom, & Koschmann, 1995) appear to be sufficiently intuitive that students are able to use it with very little training. The need for further tuning of the keyword list was noted.

2) **Representing the group's deliberations.** Implementing an electronic replacement for the boards (i.e., View #3) is a more difficult undertaking than we had originally anticipated. Using Aspects appeared to be an acceptable stop-gap solution, but there is a clear need for some more design effort here.

---

[2]As mentioned previously, one student is still responsible for being the "reader", that is the person who interrogates the representation of the case (i.e., the MMT or PBLM). A possible role for a sixth student would be to maintain a list of comments and possible corrections to the teaching case.

3) **Interactive data sharing.** The idea of conversational data sharing (as offered through the e-talk program) seems to represent a real need within these meetings. The program was used heavily within the observed meetings. The primary use was for sharing information about the case by the "reader". The ability to immediately provide copies of long textual results (e.g., consultant's reports, past medical histories) to all members of the group by broadcasting through e-talk, was considered by the students to be one of the major advantages of exploring a case in the CLL. Other uses included: sharing material from personal notes, dispatching of material to the individuals charged with maintaining the "boards", responding to polling requests from the tutor/coach, and some incidental, off-task exchanges.

4) **Facility design.** Though the prototype CLL (see Figure 3) satisfied our design requirements, in practice it left a few things to be desired. The projection system had poor contrast ratios and the overhead projector was noisy and interfered with visual access among members of the group. The students found the seating arrangement around the semi-circle to be more formal and less intimate than their traditional meeting room.

5) **Supporting student work outside of meetings.** From the students' perspective, having a personal computer for use both within and between meetings was the biggest benefit of this approach. This was true even though we did not, because of the short length of the trial, provide any resources (e.g., modems, network access outside of the meetings) to support the students outside of meetings.

F. SUMMARY AND CONCLUSIONS

The approach to instruction that we are calling Computer-Supported Problem-Based Learning offers a number of clear advantages. These include: more authentic case presentation, simplified case inquiry, the creation of an archival record of the group's deliberations, and support for student note taking. The Curricular Evaluation demonstrated that productive meetings could be conducted in technology-enriched environments such as the prototype CLL. Though we have learned a lot in the last three years, many questions remain unanswered. These include:

1) **PBL as enacted process.** What is it that makes a PBL meeting instructionally productive? Though we have developed some ideas about this, there is still clearly much to learn.

2) **Facility design.** Are there less expensive alternative designs for rooms and furnishings that would just as adequately support PBL meetings?

3) **Video-based case presentation.** We were able to produce only one video-based case during the course of this project. Though very nice to have, it was both expensive and very labor-intensive to produce. Is there a way of more readily and less expensively producing more video-based teaching cases? What is the best medium for presenting this material (e.g., video disc, CD-ROM, network server)?

4) **Representing the group's deliberations.** If the representations of the "boards" (i.e., View #3) are made accessible to the members of the group outside of the meeting, what new possibilities will this introduce for the group and how will it change the process?

5) **Supporting student note taking.** We had originally intended to develop tools to support student note taking (i.e., View #4). We eventually decided to defer this activity until we had developed a better idea of how students organized their notes and what they chose to put in them. The curricular evaluation was too short to motivate the students to produce extensive notes on the computer. The question remains, therefore, in what ways can computers be used to facilitate student note taking.

6) **PBL meetings with remote participants.** What implications does this new approach to supporting PBL meetings have for conducting meetings in which participants are no longer necessarily co-located?

7) **Generalizing our findings.** Finally, how does this body of work generalize to PBL curricula at other medical schools? In other professional programs (e.g., engineering, business management)? To other forms of collaborative instruction?

This project began with a simple question: In what ways might technology serve to support collaborative methods of instruction such as PBL? Though substantial progress has been made toward answering this original question, we are now confronted with a new list of intriguing questions. But, then, perhaps that is the course of all serious research endeavors.

G. REFERENCES

ACME-TRI (1993). Educating Medical Students: Assessing Change in Medical Education-The Road to Implementation. *Academic Medicine, 68*(Supplement), S7-S48.

Barrows, H.S. (1990). Inquiry: The pedagogical importance of a skill central to clinical practice. *Journal of Medical Education, 24*, 3-5.

Boud,D.(Ed.)(1985). *Problem-based learning in education for the professions.* Sydney, Aust.: HERDSA.

Cawley, P. (1989). The introduction of a problem-based option into a conventional engineering degree course. *Studies in Higher Education, 14*, 83-95.

Collins, A., Holyoak, K., Klein, G., Kolodner, J., & Koschmann, T. (1994). Panel Presentation: The Role of Cases in Learning. In *Proceedings of the Sixteenth Annual Conference of the Cognitive Science Society* (p. 979), Hillsdale, NJ: Lawrence Erlbaum Ass.

Conlee, M. & Koschmann, T. (1994). Evidence of scientific reasoning in a PBL meeting. Presented at a video interpretation session entitled, "Looking and Listening: Understanding small-group process in a problem-based learning meeting" at the Annual Meeting of the American Educational Research Association, New Orleans, LA.

De Virgilio, G. (1993). Problem-based learning for training primary health care managers in developing countries. *Medical Education, 27*, 266-273.

Distlehorst, L.H., & Barrows, H.S. (1982). A new tool for problem-based self-directed learning. *Journal of Medical Education, 57*, 466-488.

Donaldson, R. (1989). A good start in architecture. In B. Wallis (Ed.), *Problem-Based Learning: The Newcastle Workshop* (pp. 41-53). University of Newcastle, Faculty of Medicine.

Edmundson, K. (1994). Concept maps and the development of cases for problem-based learning. *Academic Medicine, 69*, 108-193.

GPEP (1984). Panel on the General Professional Education of the Physician. *Journal of Medical Education, 59*(11, Part 2).

Grissom, S., & Koschmann, T.D. (1995). Hypermedia without Programming: Automatic Generation of Presentation Documents for Case-Based Instruction. To appear in Proceedings of 1995 National Educational Computing Conference.

Guba, E., & Lincoln, Y. (1981). *Effective Evaluation.* San Francisco, CA: Jossey-Bass.

Heycox, K., & Bolzan, N. (1991). Applying problem-based learning in first-year social work. In D. Boud, & G. Feletti (Eds.), *The challenge of problem based learning* (pp. 186-193). New York: St. Martin's Press.

Higgins, L. (1994). Integrating background nursing experience and study at the postgraduate level: An application of problem based learning. *Higher Education Research and Development, 13*, 23-33.

Koschmann, T. (1992). Computer support for collaborative learning: Design, theory, and research issues. *ACM SIGCUE Outlook, 21*(3), 1-2.

Koschmann, T.D. (1993a). Two cans and a string: A metaphor for computer-supported classroom conversation. Paper presented at the meeting of the American Educational Research Association, Atlanta, GA (ERIC # IR054646).

Koschmann, T. (1993b). Theories of CMC and their application in the classroom. InterCHI '93 Research Symposium, Amsterdam, Netherlands.

Koschmann, T. (1993c). Ethnography and theory-based design. ECSCW '93 Workshop on Ethnography in Practice, Milano, Italy.

Koschmann, T. (1994). Toward a theory of computer-support for collaborative learning. *Journal of the Learning Sciences, 3*, 218-224.

Koschmann, T. (in press-a). Medical education and computer literacy: Learning about, through, and with computers. *Academic Medicine.*

Koschmann, T. (in press-b). Paradigm shifts and instructional technology. In T.D. Koschmann (Ed.) *CSCL: Theory and practice of an emerging paradigm in instructional technology*. Hillsdale, NJ: Lawrence Erlbaum.

Koschmann, T.D., Feltovich, P.J., Myers, A., & Barrows, H.S. (1990). Designing communication protocols for a computer-mediated laboratory for problem-based learning. In *Proceedings of the Fourteenth Annual Symposium on Computer Applications in Medical Care* (pp. 464-468). Los Alamitos, CA: IEEE Computer Society Press.

Koschmann, T.D., Meyers, A., Feltovich, P.J., & Barrows, H. (1990). The computer-mediated conference as a medium for learning in a problem-based curriculum. AMIA First Annual Educational and Research Conference, Snowbird, UT.

Koschmann, T., Myers, A., Feltovich, P., and Barrows, H. (1994). Using technology to assist in realizing effective learning and instruction: A principled approach to the use of computers in collaborative learning. *Journal of the Learning Sciences 3*, 227-264.

Koschmann, T., Newman, D., Woodruff, E., Pea, R., & Rowley, P. (1993). Technology and pedagogy for collaborative problem solving as a context for learning: Report on a CSCW '92 workshop. *ACM SIGCHI Bulletin, 25*(4), 57-60.

Koschmann, T., & Ryan, C. (1992). Using ethnographic study to inform the design and evaluation of instructional systems; Using technology to support ethnographic study. Presentation at Workshop on Ethnographic Studies of Work and CSCW System Design, ACM Conference on Computer Support for Cooperative Work, Toronto, Ontario.

Kutz, S., Wylie, M., & Gold, N. (1990). Problem-based learning: An alternative approach to legal education. *Dalhousie Law Journal, 13*, 787-816.

Lovie-Kitchin, J. (1991). Problem-based learning in optometry. In D. Boud, & G. Feletti (Eds.), *The challenge of problem based learning* (pp. 194-202). New York: St. Martin's Press.

Maitland, B. (1991). Problem-based learning for an architecture degree. In D. Boud, & G. Feletti (Eds.), *The challenge of problem based learning* (pp. 203-210). New York: St. Martin's Press.

Myers, A., Barrows, H.S., Koschmann, T.D., & Feltovich, P.J. (1990). The facilitation of problem-based learning in medical education through a computer-mediated tutorial laboratory. In *Proceedings of the Fourteenth Annual Symposium on Computer Applications in Medical Care* (pp. 469-472). Los Alamitos, CA: IEEE Computer Society Press.

Ryan, C. (1993). The GT2000: An object-oriented tool for qualitative analysis, Unpublished master's thesis, Southern Illinois University, Carbondale, IL.

Ryan, C. & Koschmann, T. (1994). The Collaborative Learning Laboratory: A technology-enriched environment to support Problem-Based Learning. In *Proceedings of the 1994 National Educational Computing Conference* (pp. 160-167), Eugene, OR: ISTE.

Stinson, J., & Milter, R. (1995). Educating leaders for the new competitive environment. In Gijselaers, Tempelaar, Keizer, Blommaert, Bernard, & Kasper (Eds.), *Educational innovation in economics and business administration: The case of problem-based learning.* Amsterdam, Netherlands: Kluwer Academic Publishers.

Tedesco, L. (1990). Responding to educational challenges with problem-based learning and information technology. *Journal of Dental Education, 54,* 544-547.

Winsor, K. (1991). Applying problem-based learning to the practice of law. In D. Boud, & G. Feletti (Eds.), *The challenge of problem based learning* (pp. 217-224). New York: St. Martin's Press.

REPRESENTATIONS OF CLINICAL REASONING IN PBL MEETINGS 1: THE INQUIRY TRACE

Melinda Conlee and Timothy Koschmann
Dept. of Medical Education
Southern Illinois University

One of the rationales for the introduction of Problem-Based Learning (PBL) was that it would facilitate the acquisition of effective reasoning skills on the part of medical students (Barrows & Feltovich, 1987). The materials and methods of PBL have been designed to foster a particular reasoning strategy, termed *hypothetico-deductive reasoning* (Barrows & Tamblyn, 1980). Hypothetico-deductive reasoning has been described as hypothesis generation followed by inquiry (Elstein, Shulman, & Sprafka, 1978). In respect to medical problem solving, hypothetico-deductive reasoning strategies collectively are referred to as the clinical reasoning process (Barrows & Feltovich, 1987). Students of PBL are encouraged to develop reasoning skills in several ways. First, teaching cases utilized within the PBL curriculum are designed to be ill-structured, resembling cases seen in actual practice (Koschmann, Meyers, Feltovich, & Barrows, 1994). Second, the ill-structured cases are examined in small group settings, an environment which allows for early practice of verbal summations of patient problems (Distlehorst & Barrows, 1982). Third and finally, rather than being given a synopsis of the case, the students must actively inquire for pertinent clinical data (Barrows, 1985). Barrows, Norman, Neufeld, & Feightner, (1984) have argued that in order for an inquiry to be effective, it should be conducted in respect to the possible diagnoses suggested by the patient problem. As subsequent interview questions and physical exams are performed by the diagnostician, information will be obtained which will support the more likely hypotheses entertained.

In this paper, we attempt to descriptively represent some of the processes which occur in a PBL meeting. We are specifically interested in how effective reasoning skills are acquired and to what degree PBL, as a method, is conducive to the acquisition of these skills. In undertaking this

study, we have adopted an observational technique designed to describe the learning process as it is understood and experienced by its participants.

DESCRIPTION OF THE INQUIRY TRACE

We have attempted to understand student's reasoning within the PBL meeting on a global level looking at the group's full deliberations with respect to a single case. We have designed an instrument representing the process involved during a case work-up. This tool is called the Inquiry Trace and is designed to capture the temporality of the clinical reasoning process.

PBL is practiced in various ways at different institutions (Barrows, 1986). At Southern Illinois University School of Medicine, PBL classrooms consist of five to six students and one faculty member who plays the role of facilitator to the small group discussion over a teaching case. The Problem-Based Learning Curriculum at our institution implements a special method of case presentation to students in which medical problems are simulated from real patient cases. The approach used to simulate medical cases at SIU-SM is a specially-formatted book known as a PBLM (Problem- Based Learning Module) (Distlehorst & Barrows, 1982) which presents the case-related information and supports students' diagnostic inquiry fully. Students may pose interview questions and request examination or test results for the patient case represented by the PBLM. For each such item requested, the student is directed to a specific page in the text of the module. Information obtained from the PBLM is recorded by a designated group member on a write-on board and organized into categories such as patient data, hypotheses, laboratory tests, and learning issues. The group is given the presenting situation information and is required to compile a list of likely hypotheses to the diagnosis of the patient's problem. After an initial hypothesis list is constructed, the group selects pertinent data items from the PBLM, gathering both supporting and counter evidence in respect to the initial list of hypotheses.

The general focus of our analysis is to represent the problem solving activities described above. The time frame for this level of investigation is quite long—involving several meetings of about two or more hours duration taking place over the course of a week or so. For our analysis, a video record is made of each meeting. The body of information constructed during this

process is captured by the use of the Inquiry Trace. On the Inquiry Trace the list of diagnostic theories advanced by the group is juxtaposed with the sequence of evidence pertaining to the case under study. Basically, the Inquiry Trace is a table with columns, headed by theories and rows, headed by discreet items of evidence. At some point in the beginning of a case work-up in the PBL group setting, individual participants express theories regarding the possible diagnosis of the problem in question. For purposes of analysis, the "lifeline" of one theory begins at the point that it is recorded on a write-on board shared by the group. The theory column is darkened on the table to indicate where in the process of gathering information that the lifeline of the theory exists.

Data items are recorded on the Inquiry Trace in the order in which they are requested by the group. Ideally, the evidence is gathered with the list of multiple hypotheses in mind. As students request specific data items from the PBLM (e.g., interview questions) the items are recorded on the left side of the Inquiry Trace table. As students propose new theories and record them on the board, the theories are added across the top of the page. Consequently, each single data item is represented by one row and each single theory is represented by one column on the Inquiry Trace. The line corresponding to a theory column is highlighted to indicate when (visa vis the emerging clinical picture) the theory was first recorded on the board and when it was removed or struck out. The intercept of a theory column and a data element row is darkened when data element is explicitly linked with the theory in the group's discussion leading up to the presentation of the data item or immediately after. Some conversational interplays of hypotheses with evidence may occur in later summaries. Due to this phenomenon, the corresponding intersection on the Inquiry Trace is circled and annotated as to the time of it's occurrence. Annotations such as this allow one to differentiate between interplays occurring as specific evidence emerges and interplays which occur otherwise in the conversation. Two additional categories of information appear along side the recorded evidence. Time codes address specific video frames and collectively are a location tool. Learning Issues are those subjects which surface in group discussion when gaps in knowledge are revealed. Learning Issues are recorded on our Inquiry Trace adjacent to items of evidence. Recording Learning Issues in this manner allows for examination of them in the context of the group's

evidential investigation. Hence, the Inquiry Trace serves as a tool for organizing the temporal relationships of theories, evidence, Learning Issues, and time codes, as they occur in the sequence of problem solving.

The Inquiry Trace was developed as an instrument for studying the interplay of theory and evidence. It helps to identify places in the six or more hours of discussion devoted to the case where significant reasoning work is accomplished in the PBL group. In order to look at the reasoning process for one case, all meetings over that case are observed and recorded on the Inquiry Trace. Note that this method of description is only a heuristic in that we do not necessarily know where all of the interplay occurs. Our method simply allows us to located where group talk regarding theories and evidence is likely to occur. On the Inquiry Trace, the intersections are marked and time coded when students converse about their theories as they may or may not correspond with the generated evidence. Consequently, the plots on the matrix indicate an instance of the types of conversations reflective of scientific reasoning. From the Inquiry Trace, the locations of possible conversations containing reasoning processes may be determined.

(See Figure 1, p. 11). This Inquiry Trace form was completed during a video tape analysis of a group of second year, PBL medical students at SIU School of Medicine. A PBLM was the method of case presentation utilized by the students. The figure represents the first twenty minutes of the initial PBL group meeting over this case. The presenting situation in this instance gives the following information: "JAKE ELWOOD, a 65-year-old white male, explains he has had recent problems with his memory and with 'expressing' himself". The student's initial hypothesizing activities and related inquiry to the patient are represented in this figure. For example, the first hypothesis, 'stroke' was suggested by a student after the presenting situation was revealed to the group. The possibility of a stroke being this patient's problem was discussed as a justification for obtaining the items of evidence indicating 'reason for patient encounter', 'onset' of problem, and 'temporal profile' of the problem. The intersection circled and annotated indicates discussion that took place during the second meeting over this case. One student related that the possibility of a lesion in a specific location in the brain as a reason for the patient's leg symptoms. As it is annotated, this interplay occurred in the second meeting over this case and immediately resulted in the theory,

'Metastatic CA'. Information regarding the patient's leg problems was revealed when his wife was questioned (Q 188) regarding his condition.

DISCUSSION

As mentioned in the introduction, PBL is designed to invoke effective clinical reasoning skills appropriate to medical problem solving. Research describing the work of clinicians in practice classifies the expert reasoning process as automatic pattern recognition (Patel & Groen, 1986). Elstein(1994) contends that this may be so yet only in situations when the clinician is confronted with a patient problem that he or she has seen repeatedly in the past. He proposes a modified model of physicians' clinical reasoning process in which hypothesis testing is used with unfamiliar problems. Furthermore, Elstein's model holds that if methods are used to break down the steps of pattern recognition, hypothesis testing may very well be part of the underlying cognitive structure (Elstein, 1994). With this in mind, the importance of representing the progression of reasoning that occurs in a Problem-Based Learning setting becomes evident. In order for medical students to advance to the point of pattern recognition, they first must learn to reason properly. Moreover, as Elstein propounds, physicians do not use pattern recognition exclusively, but in conjunction with hypothesis testing in accordance with an emerging stream of evidence from the patient problem.

In the area of educational research, a method of tracking student's reasoning strategies during problem solving activities meets the recent interest in evaluation of learning processes as opposed to learning outcomes (Glenn, Koschmann, & Conlee, 1995). The researcher of problem solving activities is able to track with the Inquiry Trace, the sequence of these activities in regard to the inter-relatedness. The result is a representation of the intricacies of problem solving process in question. Applying the Inquiry Trace to the entire set of activities included in diagnosing the teaching case maps the involved cognitive performances. Informative reasoning events within the problem solving activity as a whole may be located and more closely analyzed. We use the Inquiry Trace for researching reasoning strategies with the intention of informing future educational implementations. We feel that our method also may prove useful to PBL participants and tutors.

Tutors, teachers, and/or coaches who facilitate problem-based learning groups may find that keeping track of student's questioning in regard to an initial list of hypotheses aids in fostering metacognitive skills. Conceivably, a group facilitator could keep track of the group's thinking as it occurs in conversation with the Inquiry Trace. Barrows (1994) contents that reasoning pathologies have been detected in students during evaluation of their clinical performances. By tracing group reasoning, the tutor/coach may be able to realized these pathologies and corrected them through facilitation while the student is still at the learning level.

From the perspectives of participants in problem-solving activities, the Inquiry Trace may be used as an aid to the development of metacognitive skills. Since medical students are novices at clinical reasoning, a depiction of how, when, and why, data is gathered during that process may directly motivate reflection on that process or metacognition. "To accomplish this second-order or metacognitive thinking about a theory, an individual must have a mental representation of the theory that can then be acted on and evaluated, relative to the mental representations of evidence that are differentiated from the theory" (Kuhn, 1991). Proper mental representations may be more efficiently conceptualized by the student of problem-solving with the aid of a illustration of the information involved. The Inquiry Trace may serve to reify abstract aspects of the problem-solving process and hence promote metacognition.

The MMT (Grissom & Koschmann, 1995) is an electronic case presentation format currently being developed and evaluated at SIU School of Medicine. Designed for PBL group work in the context of networked computer terminals, students must decide which data items to retrieve towards the construction of patient information (Grissom & Koschmann, 1995). Since this format is divided into sections representing interview questions, physical examinations, and laboratory tests just like the PBLM, the MMT supports an "authentic process of inquiry" (Barrows, 1990; Koschmann, et al., 1994). The MMT also provides a function to record group inquiry to the case for later evaluation. The information recorded on by the MMT is the same as the evidential information tracked by the Inquiry Trace. After a case is completed by a group, this record, for example, could be directly compared to an Inquiry Trace completed by an observer of the same group's work. All

possible lines of reasoning which occur during the group's work may be mapped out in regard to the entire process of diagnosing the case.

The construction of knowledge that our Inquiry Trace represents is very similar to a method of teaching and evaluating the clinical reasoning process of medical students on an individual basis called the DxR (Myers, & Dorsey, 1994). This evaluative tool is an interactive computerized patient-simulation program that requires a user's full inquiry and hence closely emulates real clinical settings. One of the educational objectives of the DxR is to assess individual student's clinical reasoning process. Since the DxR amasses a user's entire investigative endeavor as well as provides feedback according to factors related with expert problem solving, it provides insight into the reasoning process that leads to a diagnosis (Myers, & Dorsey, 1994). The authors of this program claim that DxR evaluations compensate for some restraints (i.e. the possible underestimation of a reserved student) of the tutor method of individual student evaluation. "Faculty have found that the DxR record, which depicts the inquiry strategy, had provided new insight into students' problem-solving abilities" (Myers, & Dorsey, 1994). We assert that the Inquiry Trace provides for assessment of the clinical reasoning of an entire PBL group, similar to the evaluative methods facilitated by the DxR for the individual student. When paper-based presentations of medical teaching cases are replaced with electronic media, the construction of traces of this kind could conceivably be automated.

We have described the implications of tracking reasoning with the Inquiry Trace in regard to use of a case presentation that fully supports inquiry on behalf of the student. Other formats of case presentation that do not promote full inquiry from the student are practiced in problem-based educational environments such as the Sequential Management Problem (SMP) (Berner, Hamilton, & Best, 1974), Patient Management Problem(PMP) (Rimoldi, 1988), and the Sequential Patient Simulation (SPS). For example, "Part I" of most SPS documents contain a chief complaint and follow up information on that complaint. At the end of "Part I" and subsequent parts of the SPS are questions under a heading labeled "Reasoning". Although these reasoning questions are very general, (i.e. "What general classification of disease might be the most likely source of the difficulty?") and hence allow for students to formulate specific inquiries, these questions seem to propose a framework for subsequent research. A group's inquiry could be tracked with

the Inquiry trace but a large part of the clinical reasoning process on behalf of the student is lost. Hence, detailed information(i.e. specific pieces of evidence obtained from interview questions and physical exam and laboratory test results) are not made explicit.

In educational environments where case presentation is utilized, the degree to which the method fosters inquiry on the part of the learner has implications for both the process of learning and the outcomes of that experience. In a Problem-based learning group meeting with a PBLM case format, the Inquiry Trace provides a representation of the reasoning processes of the group. We contend the Inquiry Trace as a method of describing how PBL supports the development of hypothetico-deductive reasoning skills. With further use of the Inquiry Trace as a method of observational research or as an aid to metacognition, patterns may emerge regarding PBL group inquiry.

REFERENCES

Barrows, H. S. (1994) *Practice-Based Learning: Problem-Based Learning Applied to Medical Education.* Southern Illinois University School of Medicine; Springfield, Il.

Barrows, H. S. (1990). Inquiry: the pedagogical importance of a skill central to clinical practice. *Medical Education, 24,* 3-5.

Barrows, H. S. (1986). A taxonomy of problem-based learning methods. *Medical Education, 20,* 481-486.

Barrows, H. S. (1985). *How to Design a Problem-Based Curriculum for the Preclinical Years.* New York, Springer.

Barrows, H.S. & Tamblyn, R.M. (1980) *Problem-Based Learning: An Approach to Medical Education.* New York, Springer.

Barrows, H. S. & Feltovich, P. J.. (1987). The clinical reasoning process. *Medical Education, 21,* 86-91.

Barrows, H. S., Norman, G., Neufeld, V., and Feightner, J. (1984). The clinical reasoning of randomly selected physicians in general medical practice. *Clinical and Investigative Medicine 5,* 49-55.

Berner E.S., Hamilton, L. S., & Best, W.R. (1974). A new approach to evaluating problem solving in medical students. *Journal of Medical Education, 49,* 666-672.

Distlehorst, L.H., & Barrows, H.S. (1982). A new tool for problem-based self-directed learning. *Journal of Medical Education, 57,* 466–488.

Elstein, A. (1994) What Goes Around Comes Around: Return of the Hypothetico-Deductive Strategy. *Teaching and Learning in Medicine, 6* (2), 121-123.

Elstein, A., Shulman, L., & Sprafka, S. (1978). *Medical Problem Solving: An Analysis of Clinical Reasoning.* Harvard University Press, Cambridge, Massachusetts.

Glenn, P., Koschmann, T., & Conlee, M. (1995) Theory Sequences in a Problem-Based Learning Group: A Case Study. *Computer Support for Collaborative Learning '95 Proceedings.* Bloomington, Indiana; October, 1995.

Grissom, S. & Koschmann, T. (1995). Hypermedia without Programming: Automatic Generation of Presentation Documents for Case-Based

Instruction. In *Proceedings of the 1995 National Educational Computing Conference* , Baltimore, MD:

Koschmann, T.D., Meyers, A.C., Feltovich, P.J., & Barrows, H.S. (1994). Using Technology to Assist in Realizing Effective Learning and Instruction: A Principled Approach to the Use of Computers in Collaborative Learning. *Journal of Learning Sciences*, 3 (3) 225-262.

Kuhn, D. (1991) *The Skills of Argument*. New York, Cambridge University Press.

Myers, J.H. & Dorsey, J.K. (1994). Using *Diagnostic Reasoning (DxR)* to Teach and Evaluate Clinical Reasoning Skills. *Academic Medicine, 69* (5) 428-29.

Patel, V.L. & Groen, G. J. (1986). Differences between medical students and doctors in memory for clinical cases. *Medical Education, 20,* (1), 3-9.

Rimoldi, J. (1988). Diagnosing the diagnostic process. *Medical Education,* **22,** 270-278.

Figure 1: The Inquiry Trace

CLINICAL REASONING TRACE
PBL MEETING 91-001 thru 91-003
CASE Jake Elwood

TIME CODES	LEARNING ISSUES	QUESTIONS, TESTS, AND EXAMS	1 Stroke	2 Alzheimer's	3 Hyperuremia	4 Encephalopathy - viral - metabolic	5 Encephalopathy - multifocal leuco.	6 Senile Dementia	7 Trauma	8 Transient Ischemic Attack	9 Wernicke's Syndrome	10 Hypothyroidism	11 Metastatic C.A.	12 Arteriosclerosis	13	14	15	COMMENTS
0:06:54:00		Presenting Info. w/ Picture of Patient	●	●	●	●	●	●	●									Betty looks at Pt's face for atrophy
0:08:52:00		Q1 Reason for Encounter	●		●													Norman refers to Q2 when Hyp. is discussed.
0:10:32:00		Q2 Onset	●	●														Discussion started by Coach
0:12:33:00		Q6 Temporal Profile	●	●														and again for hyp. #9
0:12:50:00		Q12 Personality Changes	●															Attempt to find unusual behavior
0:13:09:00		Q129 Neurotic Tendencies																"
0:13:47:00		Q 188 Info. from Friends/Family	●			●				●	●							Discover big problem is worse
0:16:43:00		Q159 Alcohol									●							6 Beers a day for 50 years.
0:17:21:00		Q 167 Tobbacco																2 pks/day for 52 yrs. Stopped 2 wks ago.
0:18:51:00		Q 162 Diet	●							●								Meat & Potatoes
0:19:50:00		Q179 Past med. Hist.								●			●					
0:21:18:00		Q3 Setting for Problem	●							●								

91-0102 @ 0:21:28:00

THEORY SEQUENCES IN A PROBLEM-BASED LEARNING GROUP: A CASE STUDY

PHILLIP J. GLENN, TIMOTHY KOSCHMANN, AND MELINDA CONLEE

Problem-based learning (PBL) is a collaborative, case-based, and student-centered method of instruction (Koschmann, Myers, Feltovich, & Barrows, 1994; Williams, 1992). Though originally developed for use in medical education (Barrows, 1994), it has subsequently been adopted in a wide variety of other areas of professional training (Boud, 1985; Cawley, 1989; Tedesco, 1990; Maitland, 1991; Stinson, & Milter, 1995) and is beginning to appear in secondary and even elementary education.

In a problem-based curriculum, authentic problems drawn from clinical practice serve as the stimulus for learning (Barrows, 1994). The method begins with presentation of a problem to a group of students (usually six to eight is considered optimal) and a faculty facilitator known as the "coach" (Koschmann et al., 1994). In a setting unaugmented with technology, the group records their deliberations on a whiteboard provided for the purpose. The students, relying on their pertinent prior knowledge, attempt to analyze the problem and to identify areas for further individual study. When the group recesses, the students proceed to identify and utilize resources—person, print and electronic—which provide the additional knowledge necessary for understanding and managing the patient problem.

Our analysis focuses upon how the group reasoned through this case. We are particularly interested in seeing how theories are developed, supported, and appraised. These issues are of both theoretical and practical interest. Discourse within a PBL meeting serves as an excellent example of reasoning in action and, therefore, could contribute to the growing literature on this topic (e.g., Toulmin, 1958; Kuhn, 1991; Resnick, Salmon, Zeitz, Wathen, & Holowchak, 1993) From a more practical perspective, it has been argued elsewhere (Koschmann et al., 1994) that a detailed understanding of

To be published in the proceedings for Computer Support for Collaborative Learning '95; Indiana University, Bloomington, Indiana; October, 1995.

how an instructional process is enacted is an essential prerequisite to the design of technologies and tools to support that process.

In this study we apply procedures and assumptions of conversation analysis (CA) (see, for example, Atkinson and Heritage, 1984). Briefly, conversation analytic methods emphasize rigorous, empirical description of recordings of naturally-occurring interactions with the aim of characterizing procedures by which people organize their social worlds. CA researchers create detailed transcripts which represent verbal and non-verbal features; describe in considerable detail instances of talk; and, generalizing from individual cases, derive inductive claims about regular features of social interaction.

Our analytic focus is on the procedures through which the PBL participants accomplish their tasks. The basis for this study was a series of videotapes done following one group of second-year medical students through their deliberations with respect to a single case (i.e., an elderly male patient complaining of problems with his memory, diffculities in "expressing himself", and transient clumsiness of his right leg). These deliberations took place over three meetings each of about two-hours in duration. The segment analyzed here occurred approximately 20 minutes into the second meeting.[1] They have reconvened after a period of self-directed study and are reviewing their theories pertaining to the underlying mechanism of the patient's problem.

The PBL group participants organize their meetings at least in part around the presentation of a theory plus talk orienting to that theory. Once presented, a theory sets the agenda for subsequent talk in which group members may evaluate, modify, accept, or reject the theory. They accomplish these actions by asking questions, fitting evidence and reasoning to theory, producing alternative theories or accounts for data, and assessing ideas. The presentation and "treatment" of two theories in this excerpt is described below.

---

[1]This same segment was the basis for an interactive analysis session entitled "Looking and Listening: Understanding small-group process in a problem-based learning meeting" conducted at the 1994 Annual Meeting of the American Educational Research Association in New Orleans. We chose it for this case study both because of its familiarity and because of the rich reasoning that it reveals.

Presentation of Theory, Evidence and Reasoning: "My Theory"

The second meeting of this PBL group began with reports from the members about what each had found since their last meeting. The coach asked one of the members to summarize the case. Following this summary, the group discussed types of aphasia. At the moment where our analysis begins, the Coach provides a formulation from preceding talk of some symptoms and a conclusion (See Appendix for explanation of transcription symbols):

```
Coach:      So he's got speech involvement 'n
            right leg involvement.
Maria:      (                )
                 [
Coach:           So-         So whatever his
            problem issh (.) we're pretty
            confident it's on the left side
```

One of the students, Betty, now introduces information from a book lying in front of her:

```
Betty:      See, what it said in here, in-
```

The imperative "See" brings the attention of the other group members to Betty. "What it said in here" further places that focus on the book to which she refers.

Having thus displayed that she is about to present some information, Betty now abandons that course to announce a "theory":

```
Betty:      See, what it said in here, in-
            my theory (1.2) about this
            amnesiac (.) dysnomic aphasia?
```

The possessive pronoun marks the theory as hers individually it may also make relevant the possibility of the other's presenting their own theories. As such, it frames theory presentation as an individual action rather than a group action.

Betty has now prefaced two actions, each of which could warrant an extended turn at talk: presenting information from a book and offering a theory. The prepositional phrase "about this (1.2) amnesiac dysnomic

aphasia," neatly unifies the two projected actions, for it provides a grammatically-logical referent for both what's in the book and for the theory:

```
((edited, simplified reconstruction))
Betty:          What it says in here . . . about
                this amnesiac dysnomic aphasia

Betty:          My theory . . . about this amnesiac
                dysnomic aphasia
```

Although syntactically the prepositional phrase stands closest to the "theory" she also links it to "What it says in here" by looking down at the book in front of her, apparently reading the phrase "amnesiac dysnomic aphasia." The linkage of the two prefaces perhaps cues the listeners to treat the two actions as connected, such that the information she is providing stands in support of an about-to-be-presented theory.

```
Betty:          my theory (1.2)    about this
                                [     [
Coach:                           °mph •hh°
Betty:          amnesiac (.) dysnomic aphasia? (1.0)
                um it says the cause of lesion is
                usually deep in temporal lobe
                just like Maria was saying
                ↑Presumably interrupting
                connections of sensory
                speech areas with the
                hippocampal and parahippocampal
                regions (1.0) and I think the
                hippocampus is like a lot more
                medial.
                So if it was affected in that area
                it ↑might be the anterior cerebral
                circulation.
```

Betty quotes some from the text, then breaks off quoting to indicate that Maria (one of the other students) too had suggested what this book apparently now confirms (see **boldface** text above). Why mention that? It acknowledges that Maria was correct, and it adds Maria's voice to the book's in support of Betty.

Betty quotes more from the book, about consequences of a lesion in the temporal lobe. She stops reading and there is a one second pause. Others remain silent; this may reflect their orientation to the dual-action structure (reading and presenting a theory), and the fact that she has not yet actually

offered a "theory." Betty looks up, displaying that she has stopped reading, and via "I think" she marks what is to follow as tentative. This next statement concerns the location in the brain of the hippocampus, posited as a spatial comparison ("a lot more medial"). She presents her reasoning leading to the conclusion (that is, the "theory") that anterior cerebral circulation is the source of the problem for this patient.

Response to Theory: Implicit Endorsement

Betty has now presented evidence and reasoning leading to a concluding theory. How do the others treat this theory? As Betty nears completion of her turn, Norman says the word "anterior" in unison with her. This bit of overlapping speech occurs at what elsewhere has been described as a recognition point, an earliest possible moment at which a co-participant may show understanding and ability to anticipate the substance of utterance completion (Jefferson, 1973).

```
Betty:      So if it was affected in that area
            it ↑might be the anterior cerebral
                             [
Norman:                        Anterior.
Betty:      circulation.
```

Norman thereby can show that, given Betty's reasoning, he too arrives--independently--at the same conclusion. Perhaps this collaborative completion may also serve as a way to demonstrate alignment, if not outright agreement, with her theory.

Side Sequence: "Where is the Hippocampus?"

Rather than pursue direct treatment of the theory just presented, Coach asks a question pertaining to the location of the hippocampus. From this the participants move into an extended series of turns (not shown here) devoted to answering the question:

```
Betty:      it ↑might be the anterior cerebral
                             [
Norman:                        Anterior.
Betty:      circulation.
Coach:      Where ↑is the hippocampus?
```

Betty: I don-do we have a picture of it

If we consider theory-treatment as the central activity in which these participants are engaging, then this move to finding the hippocampus provides an example of a regular feature of conversation which Jefferson (1972) has termed a "side sequence." Specifically, a side sequence diverts talk from another sequence in progress in order to remedy, clarify, supplement understandings in some way which allows participants to return to and forward the primary activity. For example:

((hypothetical))

1	A:	Shall I pick you up tonight?
2	B:	**What time are you going?**
3	A:	**About seven thirty.**
4	B:	Okay, that would be great.

In the hypothetical example, lines 1 and 4 make a complete invitation-response sequence. Lines 2 and 3 would be considered a side sequence, the completion of which enables participants to return to and forward the business which had been momentarily suspended.

When such side sequences occur, analysts (as well as participants) can readily make sense of and account for the diversion. Why would Coach ask this, now? We can understand the relevance of Coach's question in part by recalling that Betty had marked as tentative ("I think") her earlier description of the location of the hippocampus. That uncertainty provides sequential warrant for Coach now to direct the students' focus toward finding the hippocampus. The group members look at, point to, and talk about a large flip-chart in the room which shows various perspective drawings of the human brain. Determining the location of the hippocampus, however, is not merely a matter of the coach capitalizing on a teachable moment; it is also relevant to the task of treating Betty's theory, which may stand or fall in part depending on the accuracy of her previous placement of the hippocampus as "medial." Following coach's question, the group devotes approximately one minute to examining various views of the brain, identifying the hippocampus and nearby organs. This side sequence terminates with coach confirming Lil's pointing (with directions from Norman) to part of one picture:

Norman: Go to the <u>crevice</u> there

(0.18)
that little loop
(1.05) ((Lil points to picture))
Yeah.

Coach: **Th:at's it.**

The group members seem to have confirmed that the hippocampus is, indeed, as Betty had claimed, "a lot more medial."

Alternative Theory with Reasoning and Evidence: "My Other Theory"

Betty now presents (and claims ownership of, via a possessive pronoun) a second "theory." This theory stands in contrast to her earlier one, offering "space occupying lesion" as an alternative explanation to "vascular lesion."

Betty: My ↑other theory is that if it's if it's ↑not a vascular lesion but a ↑space occupying lesion it was right there((*points to chart*))in the area we were pointing to it would be like a posterior limb of the interior capsule which would be where the corticospinal to the leg would be going through that part.

Betty attempts to fit evidence to this new explanatory frame.

Specifically, she suggests localizing the problem in an area of the brain through which would travel nerves to the leg. Since leg clumsiness is one symptom for this patient, explaining leg symptoms becomes a relevant fact to be explained by any theory.

Interestingly, Betty presents this second theory while the first theory is still "on the table." The first one has not been accepted or rejected. Thus, it may be that treatment of the second theory is in some direct way relevant to evaluation of the first one. It may be too that this sequencing displays the two theories as part of some larger set such that invoking one makes invoking the other relevant. If so, that larger domain may be most clearly evident in the contrastive pair "not a vascular lesion but a space occupying lesion."

Response to Theory: Disaffiliation, disagreement, rejection

While the first theory received implicit alignment from Norman and a followup question from Coach which at least entertained its viability, this second theory receives two kinds of responses, each of which may be heard as disaffiliative. First, Maria raises an objection to the proposal, presenting in a question a piece of evidence one would expect to find were this theory to be true.

```
Betty:      where the corticospinal to the leg
            would be going ↑through that part.
            (1.2)
Maria:      Wouldn't you expect to see a
            lot (1.0)
            greater (0.8) involvement?
            if you've got (.) an internal
            capsule?
```

Meanwhile, another response develops. Within a few syllables of the beginning of Maria's turn, Norman laughs, and one of the other students provides a second, brief chuckle. When laughter refers to talk, commonly that talk occurs in the immediately prior utterance (Schenkein, 1972). Although we cannot see the faces of the laughers on the video, placement of the laughs--shortly following completion of Betty's turn, and before Maria's turn has displayed any recognizably laughable features--suggests that they may orient to Betty's talk. If so, then through this shared laughter the others disaffiliate from Betty's theory, treating it as not to be taken seriously. Consistent with this interpretation, the Coach provides a stretched, exaggerated "Okay" which also may treat the proposal comically.

```
Betty:      where the corticospinal to the leg
            would be going ↑through that part.
            (1.2)
Maria:      Wouldn't you expect to see a lot
                                    [
Norman:                             tuh huh huh
            •hh huh •hh
                    [
Coach:                Oh:: kay.
                    [
Maria:        (1.0) greater (0.8) involvement?
                                    [
(Jenny):                              ih huh heh
```

Thus, while three participants may not even treat Betty's proposal seriously, another takes it seriously but disputes it. The other two participants remain silent. In short, Betty's second theory gets, not support, but laughter, objection, silence, and possibly laughter.

Maria's questioning objection to the second theory continues past the laughter. Betty answers the objection by producing an explanation for how a lesion could affect only a portion of the brain linking to the leg. She perhaps does not win over the others to endorsing this theory, but at least they no longer treat it as comic. The Coach shifts from a nonserious reaction to a "Yeah" which echoes Maria's disagreement. Norman, who initiated the preceding laughter, now aligns with Betty by repeating the word "motor" and assessing the information she has offered as "true."

```
Betty:          where the corticospinal to the leg
                would be going ↑through that part.
                (1.2)
Maria:          Wouldn't you expect to see a lot
                                    [
Norman:                            tuh huh huh
                •hh huh •hh
                        [
Coach:                   Oh:: kay.
                        [
Maria:            (1.0) greater (0.8) involvement?
                                    [
(Jenny):                             ih huh heh
Maria:          if you've got (.)
                             [
(?):                          °(yeah)°
                                [
Coach:                          Yeah
Maria:          an internal capsule?=
                             [
Betty:                      If its
Betty:          =If it's small, I mean if it's in
                the very posterior li:mb, the
                (0.12) posterior part of the
                posterior li:mb. (1.0) Because
                there's a- the (2.2) somato
                graphic, whatever that word
                was (0.8) arrangement of the
                corticospinals as they go
                through the internal capsule.  If
                             [
(Norman):                     °Yeah°
Betty:          you get way to the posterior ↑part
                of the internal capsule, the only
                thing that's there is it's motor
```

```
                                        [
Norman:                                  (              )
Betty:          and it's gonna be the le:g.
                                   [
Norman:                              motor
                °That's true.°
                (3.2)
```

After a pause, Coach asks a question which hearably raises concerns with Betty's second theory. Betty assesses this question as "good" then explicitly acknowledges that it undercuts the possibility of her second theory. She then produces reasoning which goes against her own theory. Maria and Norman join with her in listing symptoms which ought to accompany a space-occupying lesion:

```
Coach:          So ↑why do the leg findings go
                ↑a:way?
Betty:          That's a good question.=That kind
                of goes ↑against it being some
                kind of a space occupying
                lesion because you would expect it
                to get progressive and then to
                involve more areas.  So then it's
                probably more likely
                   [
Maria:              Headaches, you would expect=
Norman:         =You would expect headaches=
Betty:          =°Yeah, maybe°=
Maria:          =Seizures.
(?)             °Mm hm°
```

The second theory has failed to win support; even its author, Betty, has rejected it.

(Tentative) Acceptance of First Theory: "If it's vascular. "

After listing these items which "you would expect" (but which, by implication, are not present), Betty concludes in favor of the first theory, which invoked ciruclation problems as an account for the patient's symptoms:

```
Maria:          Headaches, you would expect=
Norman:         =You would expect headaches=
Betty:          =°Yeah, maybe°=
Maria:          =Seizures.
```

```
(?)          °Mm hm°
Betty:       Um- (0.7) It's more likely to
             be vascular.
```

Coach legitimizes this conclusion as valid by his subsequent actions. His "okay" moves them on to next matters (Beach, 1993), and he asks a question which presumes "vascular" to be at least plausible enough to provide a basis for further theory construction:

```
Betty:       Um- (0.7) It's more likely to be
                 vascular.
             (2.4)
Coach:       °Okay°
               [
Maria:          °With his history and social°
Coach:                                 So so
             So if it's vascular did he have
             a ↑stroke or is he having a
             TIA. What ↑is the difference
             between those two things
             ↑anyway?
```

The participants have entertained two theories, rejected the second, and, if not outright endorsing the first, at least accepted it enough to use it as a basis for further questioning and theory construction. As our analysis concludes, the group seems to be pursuing the notion that this patient's problem involves a vascular lesion.

Discussion

In this paper we have described some organizing features of talk in one portion of a PBL group meeting. Specifically, we suggest that participants orient to the presentation of theories as a central activity. One student presents a theory and supports it with evidence and reasoning; another student displays concurrence with her reasoning; and the coach then initiates a side sequence devoted to clarifying information relevant to the theory. Upon completion of this clarifying task, the same student presents a second theory posed as alternative to the first. This second theory gets no support from others participants, who respond with possibly disaffiliative laughter and with critical questions. The presenter herself then discounts the second

theory and concludes that the first is valid. The coach then uses this theory, implicitly "accepted" for the moment, as a basis for a subsequent question which leads to presentation of additional information.

Several observations seem relevant here.

1. While presenting a theory may be an individual task, the "processing" of any theory (including such actions as agreeing, disagreeing, questioning, modifying, etc.) is thoroughly interactional. This is one reason for the PBL process: it emphasizes collaborative learning. Theories survive or fall in a rhetorical, intersubjective, communicative context.

2. The presentation and treatment of theories seems to be one major organizing principle in this interaction, but it is not the only one. Glossed over rather quickly in this paper are sequences devoted to information reporting and clarifying, such as the group work of pointing out the hippocampus on flip charts, and one student's report on distinctions between strokes and TIAs. There are also time-out sequences for more casual talk, for play and laughter, or for meta-level reflection on the process.

3. In this excerpt, both theory presentations and turns at talk are differentially distributed. One student presents two theories; no one else does. Two students do almost all of the responding to these theories. Such distributions provide ways to create, maintain, and modify social interactional roles such as leader, follower, critic, etc., within a group setting.

4. Although it is not our focus here, one can readily appreciate and study the work involved in serving as coach for a PBL group. The coach intervenes at particular moments and guides the group work in particular ways. The coach cannot provide answers for the students but can display at key points essential reasoning processes.

5. In consideration of the preceding point, this interaction involves at least two organizing frameworks or sequential contexts. One is group problem-solving or decision-making. The other is instructional, teacher-student interaction. The two frameworks may differ such that orienting to both creates interactional problems for participants. How they make one or the other framework relevant at particular moments provides an interesting question for further exploration.

REFERENCES

Atkinson, J. M., & Heritage, J. (1984). *Structures of social action; Studies in conversation analysis.* Cambridge University Press.

Barrows, H.S. (1994). *Practice-based learning: Problem-based learning applied to medical education.* Springfield, IL: Southern Illinois University School of Medicine.

Beach, W. A. (1993). Transitional regularities for 'casual' "Okay" usages. *Journal of Pragmatics, 19,* 325-252.

Boud,D.(Ed.)(1985). *Problem-based learning in education for the professions.* Sydney, Aust.: HERDSA.

Cawley, P. (1989). The introduction of a problem-based option into a conventional engineering degree course. *Studies in Higher Education, 14,* 83–95.

Jefferson, G. (1973). A case of precision timing in ordinary conversation: Overlapped tag-positioned address terms in closing sequences. *Semiotica,* 2 47-96

Koschmann, T., Myers, A., Feltovich, P., and Barrows, H. (1994). Using technology to assist in realizing effective learning and instruction: A principled approach to the use of computers in collaborative learning. *Journal of the Learning Sciences 3,* 227–264.

Kuhn, D. (1991). *The skills of argument.* Cambridge, U.K.: Cambridge University Press.

Maitland, B. (1991). Problem-based learning for an architecture degree. In D. Boud, & G. Feletti (Eds.), *The challenge of problem based learning* (pp. 203-210). New York: St. Martin's Press.

Resnick, L. , Salmon, M., Zeitz, C., Wathen, S., & Holowchak, M.(1993). Reasoning in conversation. *Cognition and Instruction, 11,* 347–364.

Schenkein, J. N. (1972). Towards an analysis of natural conversation and the sense of *heheh. Semiotica, 6,* 344-377.

Stinson, J., & Milter, R. (1995). Educating leaders for the new competitive environment. In Gijselaers, Tempelaar, Keizer, Blommaert, Bernard, & Kasper (Eds.), *Educational innovation in economics and business*

administration: The case of problem-based learning. Amsterdam, Netherlands: Kluwer Academic Publishers.

Tedesco, L. (1990). Responding to educational challenges with problem-based learning and information technology. *Journal of Dental Education, 54*, 544–547.

Toulmin, S.E. (1958). *The uses of argument.* Cambridge, U.K.: cambridge University Press.

Williams, S. (1992). Putting case-based instruction into context: Examples from legal, business, and medical education. *Journal of the Learning Sciences, 2*, 367–427.

APPENDIX:

TRANSCRIPTION KEY

The notation scheme employed in this data was originally developed by Gail Jefferson. All of the symbols used in the representation of the data are defined below. For a more comprehensive explanation of Jefferson's transcription conventions, see:

Jefferson, G. (1984) Transcription Notation. In Atkinson, J. & Heritage, J. (Eds.) *Structures of Social Action* (pp. ix-xvi) New York: Cambridge University Press.

Symbol	Name	Function
[ ]	Brackets	Indicates the beginning and end of an overlapping utterance.
=	Equal sign	Latches contiguous utterances
_ _ _	Underlining	A word that is underlined is said with more stress than the surrounding talk.
(1.8)	Timed Pause	Measured in tenths of a second, this symbol indicates intervals of silence occurring within and between same or different speaker's utterances.
(.)	Micropause	A brief pause of less than (0.2)
.	Period	Indicates a falling pitch or intonation.
:::	Colon(s)	Prolongation of previously indicated sound, syllable or word.
?	Question Mark	Rising vocal pitch or intonation.
,	Comma	Indicates a continuing intonation; with slight upward or downward contour.
↑↓	Arrows	Indicates a rise or fall in intonation.
-	Hyphen	An abrupt halt of sound, syllable, or word.
< >	Greater than/Less	
> <	Less than signs	Portions of an utterance delivered at a noticeably quicker(> <) or slower (< >) pace.
( )	Parentheses	Transcriber doubt.

U.S. DEPARTMENT OF EDUCATION
Office of Educational Research and Improvement (OERI)
Educational Resources Information Center (ERIC)

NOTICE

REPRODUCTION BASIS

☐ This document is covered by a signed "Reproduction Release (Blanket)" form (on file within the ERIC system), encompassing all or classes of documents from its source organization and, therefore, does not require a "Specific Document" Release form.

☒ This document is Federally-funded, or carries its own permission to reproduce, or is otherwise in the public domain and, therefore, may be reproduced by ERIC without a signed Reproduction Release form (either "Specific Document" or "Blanket").

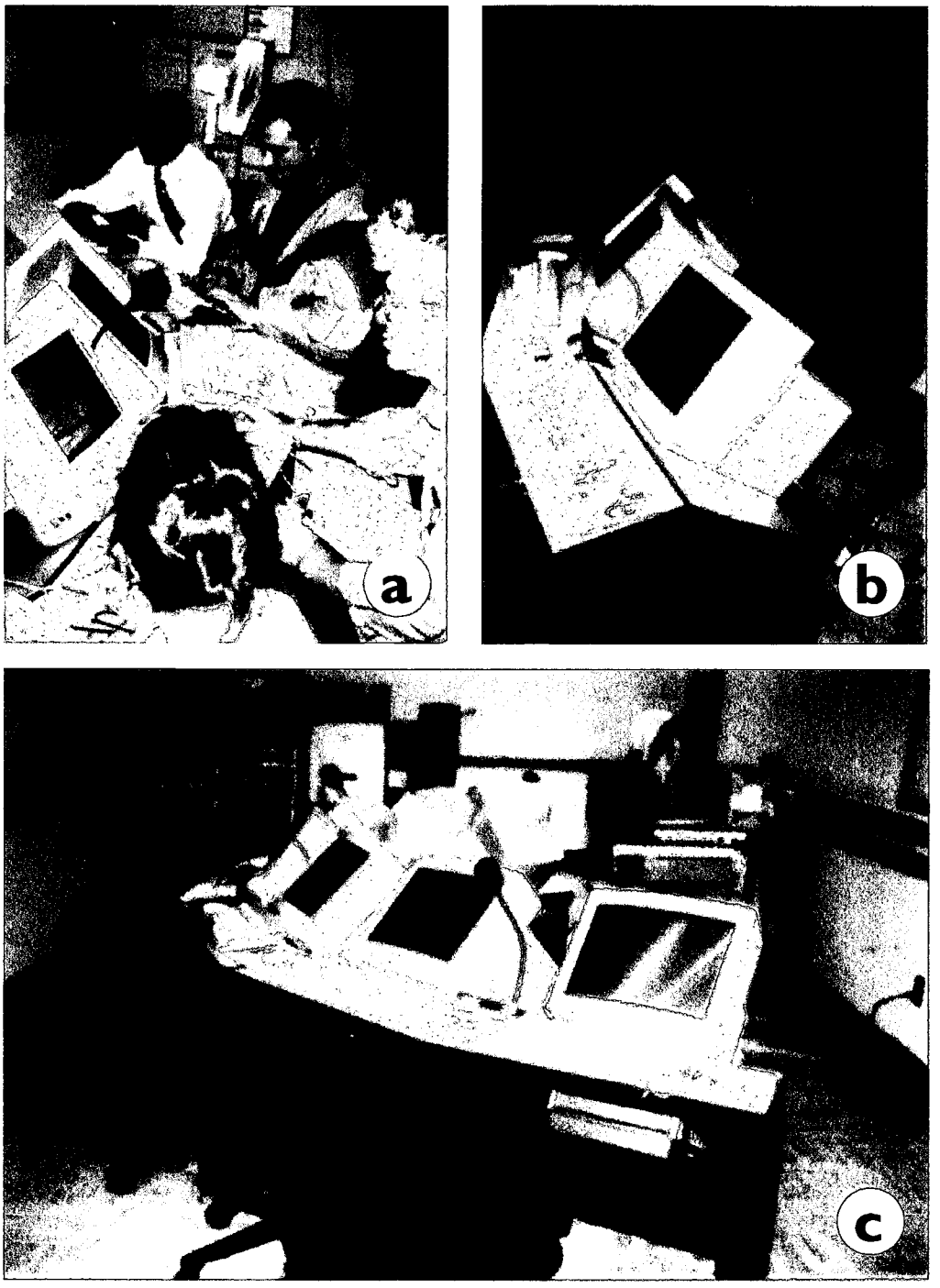

Figure 3: A prototype of the Collaborative Learning Laboratory (CLL). (Moving clockwise from upper left (a) shows a PBL meeting being conducted in the CLL, (b) shows the specially-designed desks, and (c) reveals one of the docking stations situated beneath the desk.)