DOCUMENT RESUME

ED 393 708 SE 058 292

AUTHOR	Aristov, Natasha, Comp.
TITLE	ICE Devices: A Compilation of Instructions for Inexpensive and Easy-to-Build Tools for the Science Classroom.
INSTITUTION	Wisconsin Univ., Madison. Inst. for Chemical Education.
SPONS AGENCY	National Science Foundation, Washington, DC. Directorate for Education and Human Resources.
REPORT NO	ICE-94-010
PUB DATE	94
NOTE	78p.
AVAILABLE FROM	Institute for Chemical Education, University of Wisconsin-Madison, Dept. of Chemistry, 1101 University Avenue, Madison, WI 53706.
PUB TYPE	Guides - Classroom Use - Teaching Guides (For Teacher) (052)
EDRS PRICE	MF01/PC04 Plus Postage.
DESCRIPTORS	*Chemistry; Demonstrations (Science); Elementary Secondary Education; *Science Equipment; Science Experiments; Scientific Concepts

ABSTRACT

In these years of shortened budgets, teachers are becoming more and more inventive in designing science teaching tools and experiments. This manual contains instructions for building a few such tools, either invented or improved on by teachers affiliated with the Institute for Chemical Education (ICE). The tools are created from low cost and easy-to-find materials. Some of the devices can be used in any classroom, but most of them are more appropriate for middle school and older students primarily because of the advanced concepts they teach, such as spectrometry and conductivity. The contents include: the "One-Dollar" Balance, Conductivity Probe, Magnetic Stirrer, the Piezoelectric Popper, Baster Ball Cannon, Neon Lamp Cord, the BB Board, Mass Spec Demonstration Board, Chromatography Simulator, Rod-Climbing Liquid, and Electrolysis Apparatus. For each tool described, a description (varying in length from 2-11 pages) includes: (1) cost estimates of the materials used and total cost of materials to purchase; (2) construction time needed; (3) detailed list of materials needed; (4) instructions for construction; (5) use in classroom. Appendices include: soldering and other device sources. (JRH)

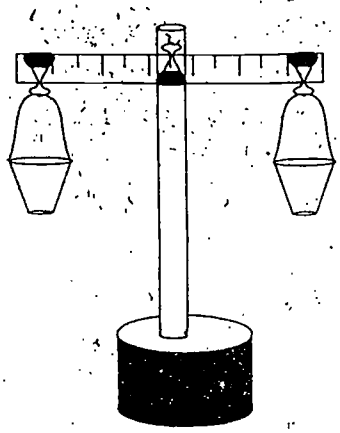

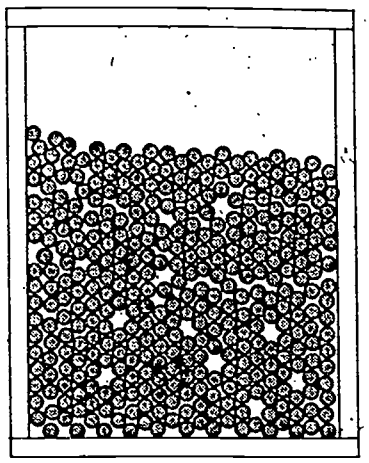

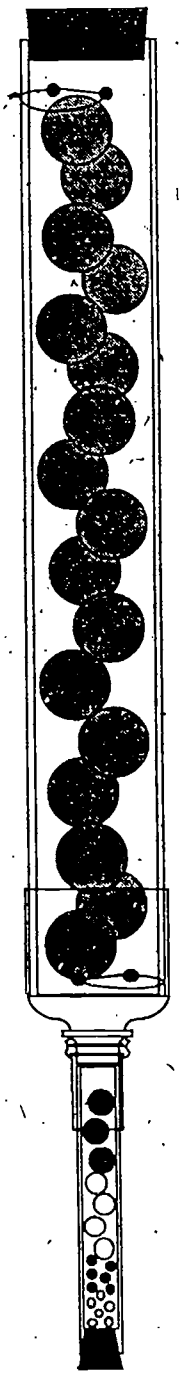

ICE Devices

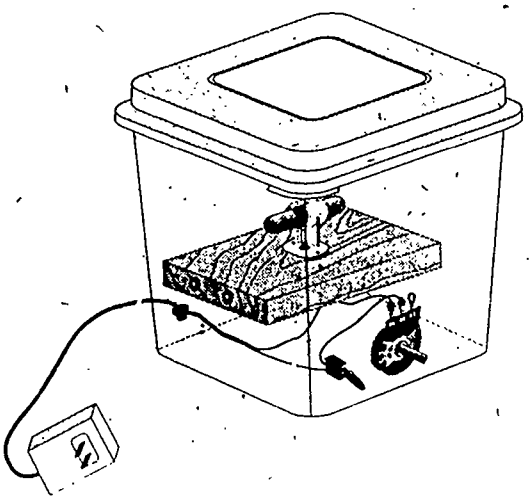

Institute for Chemical Education

ICE Publications

Solid-State Model Kit. An easy-to-use kit to build three-dimensional representations of many common crystals—metals, ionic compounds, even superconductors. Examine the structures from all angles to see how atoms or ions are arranged in the lattices. The kit comes with instructions for building over 50 different structures and a handbook of illustrated structures. $110*; Order No. 92-004. Student Kit (builds over 40 structures): $65; Order No. 94-006.

Chem Camp Handbook. A foolproofed guide to conducting a chemistry workshop on five half-days for middle school students—what to do and how to do it. Includes laboratory activities on elements, acids and bases, corrosion and analysis, metals and alloys, and crystal growing and polymers. Materials lists, instructions for laboratory support personnel, special instructor's notes, estimated budgets, and templates for handouts and publicity are provided to enable the smooth organization of a Chem Camp program. $25*; Order No. 91-007.

Fun With Chemistry: A Guidebook of K-12 Activities *(Volumes 1 & 2).* Over 100 hands-on chemistry activities and demonstrations developed and extensively tested by teachers at all levels who have participated in ICE's Chemistry Activities workshops. Activities were selected for safety, ease of presentation, and for pedagogic value, and use readily available, inexpensive materials. Each activity includes complete instructions for preparation and presentation, materials lists, and explanations, along with suggestions for appropriate grade levels and curriculum integration. Both Volumes, $40*; *Volume 1*, $19.50*; Order No. 91-005. *Volume 2*, $23.50*; Order No. 93-001.

Hands-On Activities: Student Handouts. Take-home science activities suitable for students at elementary and middle school levels. We give these to students whenever we do programs for school groups. We find that they provide a great way to involve parents in science education. 10 sets of handouts $10*; Order No. 91-008.

ICE Picks and More ICE Picks: Recommended Books of Science Activities. An annotated bibliography of references that ICE believes should be in the library of every elementary and middle school—and a few that should not. Forty publications that provide information on hands-on science activities and demonstrations were reviewed by teams of teachers and rated for their usefulness in primary science education. ICE Picks: $7.50*; Order No. 90-001. More ICE Picks: $7.50*; Order No. 94-001.

SPICE: Student-Presented Interactive Chemistry Experiences. How to organize and present a chemistry outreach program. There are scripts for presentations on energy, phases of matter, and acids and bases, each geared to audiences of kindergartners through high school, with appropriate tips for thought-provoking comments, as well as safety warnings. $14*; Order No. 92-001.

Laboratory Assessment Builds Success (LABS). A guide to assessing student performance in the high school chemistry laboratory. Includes 18 laboratory activities together with assessment items, both paper-and-pencil, and practical. Reprinted edition, including minor revisions. $17.50*; Order No. 91-006.

Memory Metal. Includes about two feet of memory metal wire in the form of the letters I-C-E and a description of the chemistry of shape-memory retention. Experiment by deforming the wire and placing in hot tap water to observe the recovery. $11*; Order No. 91-011.

Optical Transform Kit. 2nd Edition. Experiments on the diffraction of X-ray, electron, and neutron beams can determine the atomic structures of molecules. With this kit, you and your students can simulate diffraction experiments by using a hand-held laser and different arrays of dots on a photographic slide. The kit includes instructions for use as a classroom demonstration and as a laboratory exercise. $10*; Order No. 90-002. Additional slides available in lots of ten for $5.50*/lot: Unit Cell Slide, Order No. 90-002S; Discovery Slide, 93-003S; VSEPR Slide, 93-004S; Plane Groups Slide, 93-005S.

Topics in Chemistry. The following three titles are designed to provide teachers with background information on everyday topics

- **Chlorofluorocarbons and the Hole in the Ozone Layer.** Covers the chemistry, uses, and importance of chlorofluorocarbons and ozone; provides a history of theories involving their interactions in the atmosphere; and looks at changes in public policy and the response of industry. $8*; Order No. 91-003.
- **The Chemistry of Black-and-White Photography.** Reviews the development of black and white photography, and details the chemistry of all aspects of the production of a black and white photograph from the chemical composition of film to processing the final photographic image. $8*; Order No. 91-004.
- **Acid Rain: The Chemistry of Acid Deposition from the Atmosphere.** Presents a brief history of acid precipitation; describes the sources of gases that cause acid precipitation and how they are converted to acid in the atmosphere; details the effects of acid precipitation on the environment; and examines the available alternatives for reducing emissions. $8*; Order No. 91-009.
  ***Experimental Supplement to* Acid Rain.** Procedures for five experiments illustrating the effects of acid rain on the environment, using easy-to-find materials, with notes for presentation and curriculum integration. $8*; Order No. 93-007.

**Foreign and Canada orders: add 40%.*
Please enclose payment with order.
(Prices effective through December 1995.

There is a 10% discount for 10–49 copies, a 15% discount for 50 or more copies, and a 10% discount for more than 20 of the model kit.

ICE Devices

A compilation of instructions for inexpensive and easy-to-build tools for the science classroom

compiled and edited by Natasha Aristov

Institute for Chemical Education

University of Wisconsin–Madison

Institute for Chemical Education Staff

Headquarters Staff

John W. Moore
Director

Ronald I. Perkins
Assistant Director

Christy L. Cargille
Outreach Specialist

Amy Jo Huseth
Materials Development Specialist

Elizabeth A. Moore
Editorial Advisor

Patti L. Puccio
Secretary

David Shaw
Newsletter Editor

Field Center Directors

Diane Bunce
Catholic University of America
Washington, DC

Mickey Sarquis and Jerry Sarquis
Miami University
Oxford, Ohio

James Schreck
University of Northern Colorado
Greeley, Colorado

Bonner Denton
University of Arizona
Tucson, Arizona

Susan Arena
Mt. San Antonio College
Walnut, California

Babu George
Sacred Heart University
Fairfield, Connecticut

Institute for Chemical Education

Department of Chemistry
University of Wisconsin-Madison
1101 University Avenue
Madison,WI 53706-1396
(608) 262-3033
FAX (608) 262-0381
ice@chem.wisc.edu

ICE Publication 94-010

ICE is funded primarily by the National Science Foundation, Directorate for Education and Human Resources. Materials distributed and views expressed are those of ICE and do not necessarily reflect the opinions or policies of NSF.

Preface

In these years of shortened budgets, teachers are becoming more and more inventive in designing science teaching tools and experiments. This manual contains instructions for building a few such tools, either invented or improved on by teachers affiliated with the Institute for Chemical Education. They all share low cost and easy-to-find materials. They are not all appropriate for all grade levels. There are instructions for making a balance and a magnetic stirrer, which can be used in any classroom, while the other devices are more appropriate for middle school and older students, primarily because of the advanced concepts they teach, such as mass spectrometry or conductivity.

We have provided cost estimates for the consummables, but not for the tools, for each device. Since some consummables are sold more than one to a package, the actual cost of materials you may need to buy is higher than the cost of the materials you will use. For example, the "One-Dollar Balance" requires two plastic cups, which cost pennies, but you may need to buy a package of 20 that costs $1.69 or so. (Thus, the total cost of a "One-Dollar Balance" could add up to $10.79!) In each case we have given both cost estimates, of the materials used and, in parentheses, the total cost of materials to purchase. Your costs should be closer to the lower estimate, since you are likely to already have available masking tape or binder clips and similar items.

How much time do they take to build? Each of these devices has been constructed at ICE workshops in under an hour. An estimate of the time required by our "guinea pig", Kelly Jetzer, who tested all the directions before their final editing, is also given for each device. The most time-consuming step may be procurement of the materials. With very few exceptions, all materials used here are obtainable at hardware and grocery stores. You may need to find a plastics vendor for three of the projects—ask the hardware store personnel for advice.

We would like to make this manual thicker. If you have a science device that you would like to share with your colleagues, please contact ICE at the address given on the title page of this manual.

Acknowledgements: Who did what

Ron Perkins, Robert Shaner, Nüsret Hısım, Carl Houtman, Theresa Thewes and Diane Sienicki, Susan Arena, Jim Schreck, and Bill Fausey were the primary sources of the devices included here. Kelly Jetzer tested all the instructions without prior acquaintance with the apparatus and contributed revisions. Christine L. Cargille of ICE Headquarters staff provided illustrations and editorial suggestions. Layout and final editing were by Natasha Aristov, also of ICE Headquarters.

The Video Instructions

This manual is an even more valuable document when used in conjunction with the *ICE Devices* videotape. We particularly recommend showing the tape in a classroom or workshop setting, when a group of people will be constructing the devices. Each step of the procedures is shown and narrated, and the finished products are demonstrated.

The tape demonstrator and narrator is Kelly Jetzer of the ICE Headquarters staff. Jerry Jacobsen is cameraman, and collaborated with Kelly as director and editor.

If you wish to order a copy of the tape please copy, fill out, and return with payment the order form below.

___ ***ICE DevICEs Video Instructions:*** (NTSC only) $25.00 ($35.00 foreign and Canada)

Shipping and Payment: Orders from individuals must be prepaid. Purchase orders: $10 handling charge. RUSH shipping: $15/item (U. S.), $30/item (foreign and Canada). Payment must be in U. S. funds drawn on a U. S. bank by credit card, magnetically encoded check, or international money order payable to the **Institute for Chemical Education.**

Master Card® ☐ Visa® ☐ Credit Card # _ _ _ _ _ _ _ _ _ _ _ _ _ _ _ _

Expiration date: _ _ / _ _

Signature: _____

Telephone (needed for credit card purchases) _____

Return this form with payment (and purchase order if applicable) to INSTITUTE FOR CHEMICAL EDUCATION. Univ. of Wisconsin–Madison, Department of Chemistry, 1101 University Avenue, Madison, WI 53706-1396. Tel: 608/262-3033, Fax: 608/262-0381; e-mail: ice@chem.wisc.edu

Name _____

School Name _____

Address _____

City/State _____ Zip _____ Country _____

Contents

The "One-Dollar" Balance

Design by Theresa Thewes and Diane Sienicki, with modifications by R. A. Shaner

Your students can make their own balances, with supplies that you can get in any craft store. These balances are sensitive enough to measure a mass difference of 0.25 g.

Materials

- ___ *6-1/8 oz size tin can or other flat-bottomed container with a minimum diameter of 3.5" and minimum height of 1", e.g., supermarket deli container*
- ___ *2 10"-lengths 0.04" diameter trimmer line or nylon thread*
- ___ *plaster of Paris*
- ___ *2 9-oz colorless plastic cups*
- ___ *sewing needle or safety pin*
- ___ *lighter or matches*
- ___ *12"-long, 3/4"-dia. dowel*
- ___ *12" ruier (1" wide)*
- ___ *3 binder clips (3/4" wide)*
- ___ *threaded cup hook*
- ___ *1/16" drill bit and drill or hammer and nail*
- ___ *permanent marker, any color*
- ___ *index card*
- ___ *measuring cup*
- ___ *pliers*
- ___ *scissors*
- ___ *plastic utensil or old kitchen knife*

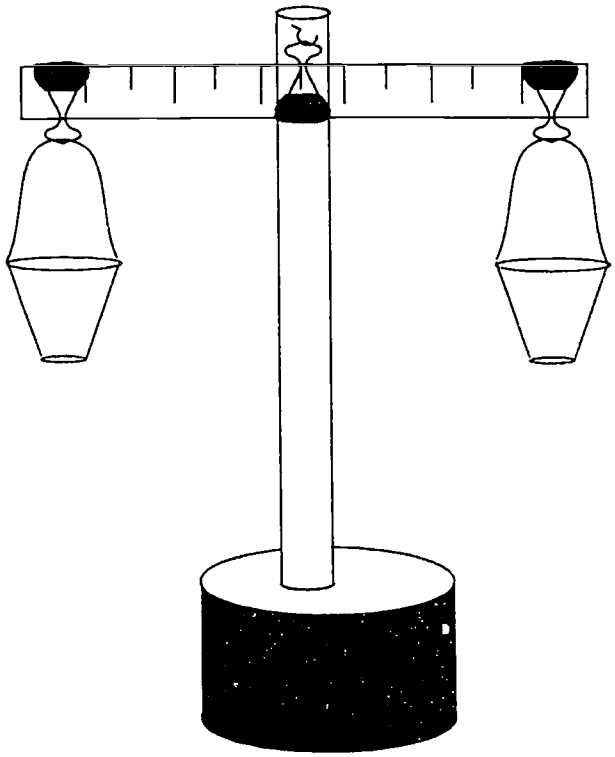

Procedure

1. Screw the threaded hook into the dowel about 5/8" away from the end of the dowel. (If the wood is too hard, you may have to pre-drill a small hole for the hook. You might be able to make a small hole by hammering in a nail about 1/4" down and then removing it, but this might risk splitting the dowel.) You will need to use pliers to make the final turns. The tip of the hook should be pointing toward the top, the nearest end of the dowel.

2. To make the base of the balance mix about 1/3 cup water and 2/3 cup plaster of Paris in the tin can or deli container. Insert the dowel upright into the plaster, with the hook end at the top. Allow to set until firm (about 20 minutes).
3. Attach the three binder clips to the 12" ruler—one at each end and one at the middle. The clip in the middle should face in the direction opposite those at the ends. Position the metal loops of the binder clips in the closed position.
4. a. Place an index card across the opening of a cup so that one corner is touching the rim (see right). The card edges cross the circumference of the cup at two points. Mark these points on the cup rim. Repeat with the second cup.

   b. Directly beneath the lips of the cups, at the marks, make holes with a hot needle tip. Test to see whether the holes are big enough for the nylon thread to pass through. If they are not, reheat the needle and increase the diameter of the holes.

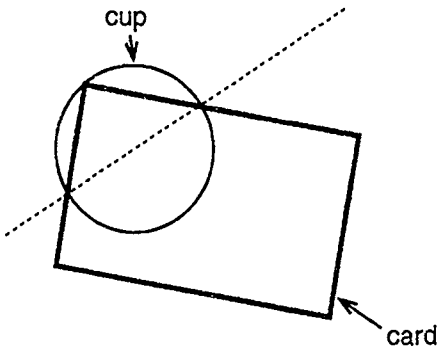

5. With a lighter or a lighted match, melt one end of each of the lengths of trimmer line so that beads of plastic form that are larger than the holes. Poke one of the lengths of line through **one** of the holes on a cup. [If you are using nylon thread, you may need to tie knots in the ends and then melt the knots.] Repeat with the other cup.
6. Pull the line of one cup through both metal loops of a closed binder clip attached at the end of the ruler, and then feed it through the second hole in the cup. Repeat with other cup and other binder clip.
7. In the completed balance, the cups should be, as closely as possible, to the same height, therefore, care is required in this next step. Lay the ruler flat on your work surface so that you can read the scale. Position the left cup upside down so that the tied off line is at the end of the ruler. Stretch out the line passing through both cup holes so that you can measure its length. Cut the line to 7"; then melt the end to form a bead of plastic. Repeat for the second cup at the right end of the ruler. (Remember that you are now measuring by subtraction, that is, 12" – 7" = 5"; cut the line at the 5" position on the ruler.) [If you are using nylon thread, you will need to tie a knot at 7" away from the first knot. It may be easier to position the knot by first tying a loose knot and then sliding and tightening it into position. Repeat for the second cup at the right end of the ruler. (Remember that you are measuring by subtraction, that is, 12" – 7" = 5"; tie the knot at the 5" position on the ruler. Melt both knots so that they form small beads of plastic.]

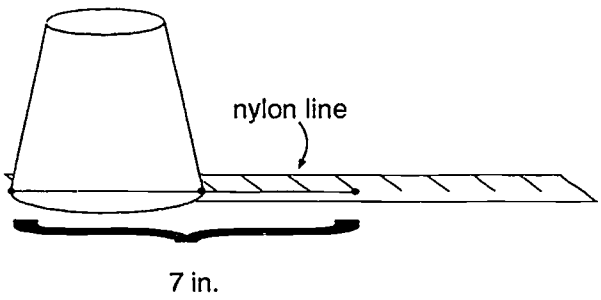

8. When the plaster base is set, hang the ruler/cup assembly on the hook by the metal loops of the middle binder clip.

Fine Adjustments

If the ruler on your balance does not hang horizontally, slide the two end binder clips along it a fraction of an inch at a time until it does. Adjusting the position of the center binder clip can also help.

Suggestions for standard masses

paper clips

*pennies (either all post-1982 or pre-1982; avoid using 1982 pennies)**

beads

marbles

BBs

Taring and using the balance

1. Place the container that you will use to hold your sample into one of the 9-oz cups. This will be called the sample cup.
2. Tare the balance (bring both sides to the same height) either by changing the positions of the binder clips or by adding standard masses to the other 9-oz cup (the standardizing cup). If you use standard masses, record the number of masses needed to counterbalance the weight of the empty sample container.

3a. ***You want to find out how much a sample weighs:*** Pour the sample into the sample container. Add standard masses to the standardizing cup until the cups are at the same height. Record the number of standard masses needed.

3b. ***You want to weigh out a given amount of sample:*** Add the number of standard masses equal to the amount of sample needed to the empty 9-oz cup. Carefully add just enough sample to counterbalance the standardizing cup.

---

* The balance is sensitive enough to measure the difference in weight of a penny made before 1982 and one made after 1982. In 1982 the U. S. Mint switched from manufacturing pennies containing 95% copper and 5% zinc to 2.4% copper and 97.6% zinc, making them lighter and less expensive to produce.

$12.50 ($16.20) **45 min**

Conductivity Probe

Your students can learn about the electrical nature of matter, electrolytic and nonelectrolytic solutions by using this conductivity probe on a paint stick. The probe is sensitive enough to show the difference between a strong and weak electrolyte. It has been seen in several incarnations, first at the 9th Biennial Chemical Education Conference in Bozeman, Montana in 1986, then in Thomas Russo's article [*J. Chem. Educ.* **1986**, *63*, 981-982]. Another simple tester, in a film canister, can be made following Frank J. Gadek's instructions [*J. Chem. Educ.* **1987**, *64*, 628-629]. The probe described here is a combination of designs by Nüsret Hısım [*unpubl.*] and David Katz/ Courtney Willis [*J. Chem. Educ.* **1994**, *71*, 330-332] devised by Kelly Jetzer and Ron Perkins.

The use of a beeper as well as light-emitting diodes (LEDs) makes this device useful in a lecture format. However, in a laboratory setting, with multiple conductivity testers in use, the beeping can become irritating. To make the tester without the beeper, omit the steps and materials below that are marked with a dagger †.

Materials

- ___ *paint stirrer*
- ___ *LED, red (Radio Shack #276-036)**
- ___ *LED, green (Radio Shack #276-022)**
- ___ *† piezo beeper (Radio Shack #273-065)**
- ___ *100 Ω resistor (Radio Shack #271-013)*
- ___ *1 kΩ resistor (Radio Shack #271-023)*
- ___ *† 1 kΩ resistor (Radio Shack #271-023)*
- ___ *9" black #14 gauge wire*
- ___ *9" white or red #14 gauge wire*
- ___ *9V battery*
- ___ *9V battery clip (Radio Shack #270-325)*
- ___ *electrical tape*
- ___ *drill and † 1/16" and 3/16"-dia. drill bit*
- ___ *vise or other means of clamping down the work; scrap wood*
- ___ *wire cutter and wire stripper*
- ___ *soldering iron and solder*
- ___ *alligator clip*

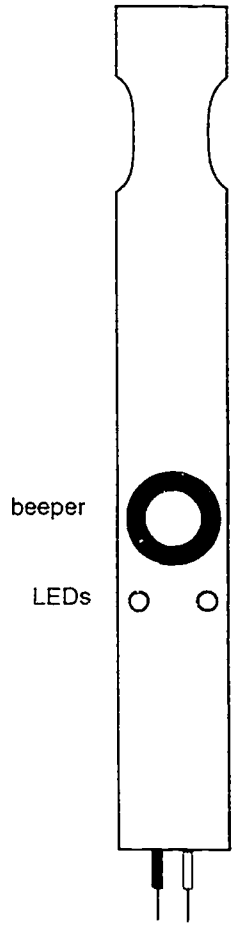

Conductivity tester; front view

* See figure caption on page 6!

Preparation

†1. Position the beeper at about the middle of the paint stick, so that a line drawn between its wire leads is parallel to the long edge of the stick. Mark the points at which the leads touch the stick. Drill 1/16" holes at these marks. Label the holes on both sides of the stick + and – as shown at right.

2. Draw a line perpendicular to the first line, about 3/4" away from the + hole. Mark two points, 9/16" apart, symmetrically placed along the line. At these marks, drill 3/16" diameter holes. (If you are omitting the beeper, position the holes at about the middle of the paint stick.)

†3. Poking through the front of the paint stick, insert the positive lead of the piezo beeper into the hole marked + and the negative lead into the hole marked –. It is important to get each of the leads into the proper hole or the beeper will not work.

†4. Because the wire leads of the beeper are too short to work with comfortably, we will attach a small piece of wire to the positive terminal: Cut a 1.75" length from one of the wires of the battery snap-on connector. Strip about 1/4" of insulation from both ends. Solder one end of this wire to the positive terminal of the beeper.

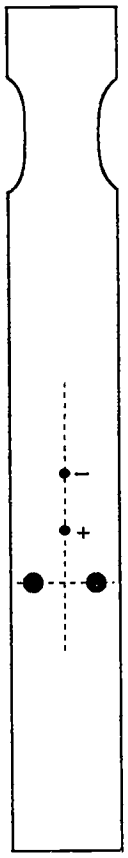

Positions of drilled holes for beeper and LEDs.

5. Insert the LEDs through the big holes. The LEDs should fit snugly. The bulbs should be on the same side of the paint stirrer as the beeper. All the wires should be pointing through to one side of the stirrer.

   Inspect an LED from the wire side. Notice that one edge of the bulb is shaved off to be flat. The wire closest to this edge is the *negative* lead. (As is the beeper, the LED is a polar device and will work only if hooked up in the correct orientation.) Orient the bulbs so that the negative leads are closest toward the top, the handle of the paint stick.

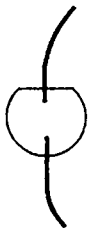

Underside of an LED

6. Cut each of the #14 gauge wires so that they reach from the LED leads to about 4" beyond the end of the paint stick. Strip 1/2" of insulation from both ends of the wires. Secure the wires with electrical tape to the paint stick.

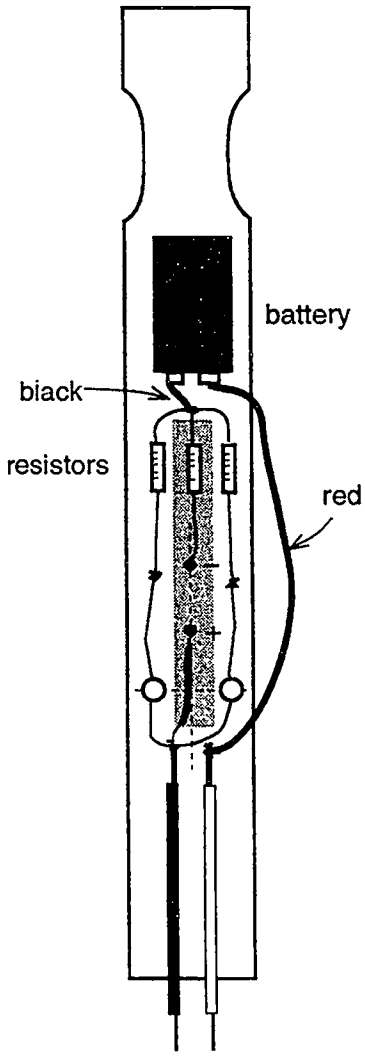

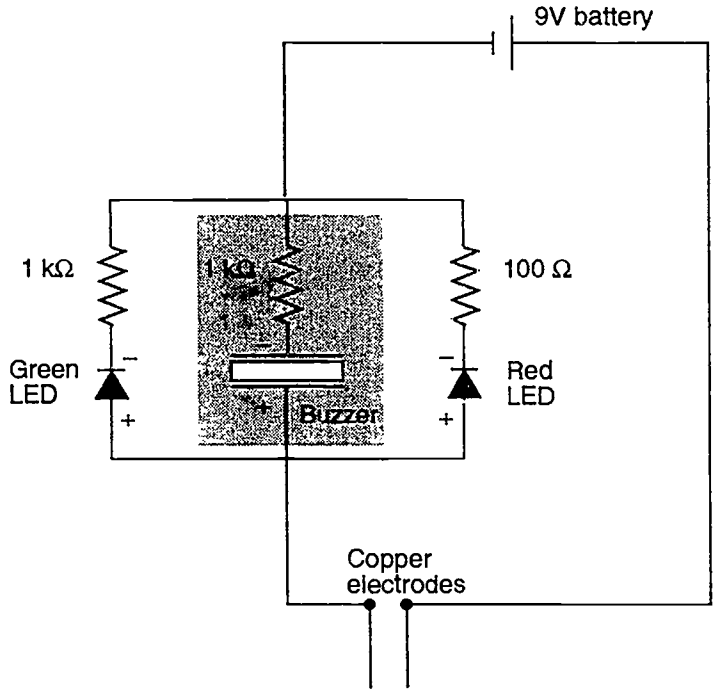

The grayed section is the part of the circuit that is omitted when the beeper is not installed.

If you order parts from All Electronics Corporation (P. O. Box 567, Van Nuys, CA 91408; phone 800/826-5432) you will need an SBZ-30 (beeper), an LED-1 (red LED), and an LED-2 (green LED). Each component requires a resistor attached as in the circuit diagram above. The resistors must be 100 Ω for the beeper, 470 Ω for the red LED, and 1 kΩ for the green LED.

7. The figure and the circuit diagram above will aid in steps 7 and 8. Join together the positive leads of the LEDs, the black #14 gauge wire †and the wire extension that you made for the positive terminal of the beeper. Make sure that you have a good mechanical connection, then solder the wires together. (See ***Appendix: Soldering*** for tips.)
8. Solder the connections as shown in the circuit diagram:
   a. negative lead of red LED to 100 Ω resistor (attach an alligator clip to the LED lead to act as a heat sink—overheating the LED will damage it)
   †b. negative lead of beeper to 1 kΩ resistor
   c. negative lead of green LED to second 1kΩ resistor (attach an alligator clip to the LED lead to act as a heat sink—overheating the LED will damage it)
   d. loose ends of all resistors and black lead of battery clip
   e. red lead of battery clip to white or red #14 gauge wire.

9. Connect the 9V battery to the battery clip. Use electrical tape or a rubber band to attach the battery to the paint stick.
10. Test the conductivity tester by touching the two #14 gauge wires to each other. Both LEDs should light †and the beeper should beep. If it does not work, re-check the polaritities of the beeper and LEDs; make sure that all the soldered connections are fast; check that the battery is at full charge.

Presentation

Place both leads of the conductivity tester onto the solid or into the liquid to be tested. The LEDs will light up and the beeper will beep according to the degree of conductivity.

Solutions to test can include household chemicals such as vinegar, sudsy ammonia and window cleaner, dish detergent, rubbing alcohol and beverages, as well as various waters: sparkling, distilled, tap, mineral, "drinking".

One can test how the conductivity changes when salt or sugar is gradually added to distilled water. This device is sensitive enough to detect a single salt crystal dissolved in a few drops of distilled water.

Other solutions to test would be strong acid and base solutions (about 2M), weak acids and bases (2M), and various polar and nonpolar solvents. (Note that 2M nitric acid will react with the copper electrodes.) Solids to test could be metals, silicon, glass and leaded glass or crystal, and an insulating solid such as a plastic.

If the tester will be used by a large number of students, you may wish to keep the liquids being tested in leak-tight containers, like the one shown here. Transparent film cans (like those used by the Fuji Film Company) make good "vials". You can get these from photo developers—they throw them away. You will need as many film cans as you have solutions, a spool of heavy-gauge copper wire, wire cutters, and pliers. A hammer and a nail (smaller in gauge than the wire) can be used to make holes in the lid of the film can for the wires to pass through.

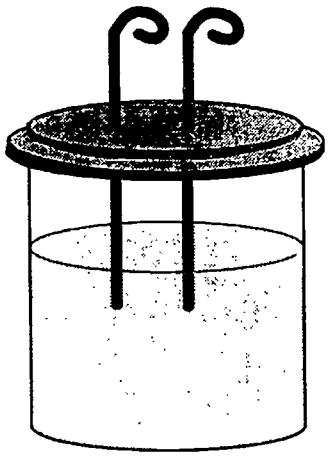

Magnetic Stirrer

by Nüsret Hısım with modifications by Kelly Jetzer

This stirring plate is adapted from a previous stirrer design [Bennett, C.; Dyer, J. *J. Chem. Educ.* **1992**, *69*, 415-416]. The changes should make the device much less expensive. You may wish to have the "shop" class prepare the wooden blocks.

Materials

- ___ *single pole, double throw mini toggle switch with solder lugs **
- ___ *6–12 VDC motor with 1"-long shaft **
- ___ *500 ohm potentiometer **
- ___ *9 VDC, 300 mA transformer (AC adapter)**
- ___ *knob to fit 1/4" shaft **
- ___ *4 wood screws and screw driver*
- ___ *soldering iron and solder*
- ___ *hot glue gun and glue sticks*
- ___ *utility knife*
- ___ *wire cutter*
- ___ *wire stripper*
- ___ *power drill and 1" spade bit*
- ___ *square plastic food container, about the size of a standard magnetic stirrer, approx 4" x 6" x 6" (can be smaller),with slightly sloping sides*
- ___ *3/4" dia. 3" long bovine magnet (available at farm supply stores)*
- ___ *magnetic stir bar (Flinn Scientific, #AP1088; tel 708/879-6900) or use ceramic magnets from a crafts or hardware store*
- ___ *1" x 3" wood scrap, long enough so that its bottom face rests inside the food container about 2-1/2" from the top of the closed cover*
- ___ *15/16" long, 4mm diameter wall anchor to fit over motor shaft (wall anchors are used to help hold screws or nails in concrete walls)*
- ___ *1/2" long, 9/16" inner diameter snap-on strap (snap-on straps are used to attach cable or pipe to walls)*
- ___ *[optional] four rubber feet and either a 1-pt size zipper-lock plastic bag of sand or plastic 9-oz. cup (2.75" tall) filled with hardened plaster of Paris to weigh down the stirrer*

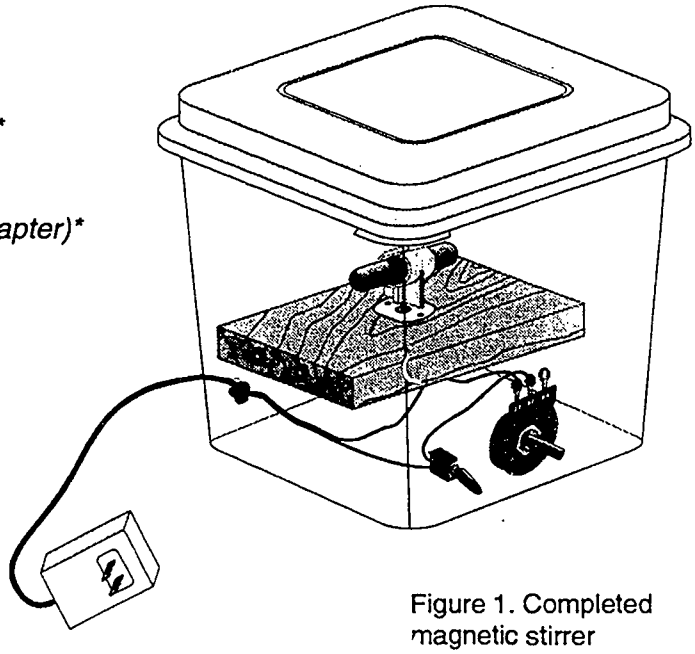

Figure 1. Completed magnetic stirrer

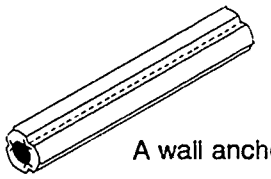

A wall anchor

* Order from All Electronics Corporation, P. O. Box 567, Van Nuys, CA 91408; phone 800/826-5432.

Procedure

0. If you are using a plastic cup filled with plaster of Paris as a weight for the stirrer, mix the plaster in the cup now and set it aside to dry.
1. Prepare the plastic food container:
   a. Using the tip of the hot soldering iron, melt a small hole in the back of the container, near the bottom. The adapter wire will pass through this hole.
   b. On the front wall of the container, about 1" from the bottom, melt a 1/4" hole. The shaft of the potentiometer (pot) will be inserted through this hole.
   The pot has a small metal stop on its front. Insert the pot from the inside of the container so that the connecting lugs are at the top and mark where the stop hits the container. Make a small hole at this mark for the stop to pass through.

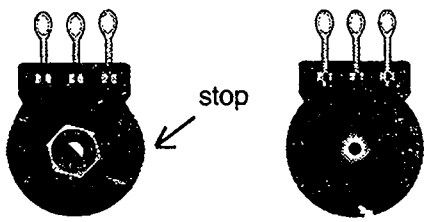

Figure 2.

   c. About 1.5" to the left of the potentiometer hole melt a small hole to fit the on/off switch.
   d. If necessary, use a utility knife to scrape off any excess melted plastic from around the holes.
2. Prepare the wire:
   a. Cut off the pin connector from the adapter cord; cut as close to the connector as possible.
   b. Insert the adapter cord into the container and knot it so that about 15" of cord remain in the container.
   c. Separate the two wires of the cord about 10" and cut a 6" piece from each wire.
   d. Strip about 1/2" of insulation from all the ends of all the wires.
3. Construct the circuit. Refer to the circuit diagram.
   a. Solder one of the adapter wires to one of the outer lugs of the switch.
   b. Solder a 6" wire piece to the center lug of the switch. Solder the other end of the wire to the center lug of the pot.
   c. Solder another 6" wire piece to the left lug of the pot (viewed with the pot shaft pointing towards you). Solder the other end of this wire to one of the motor leads.

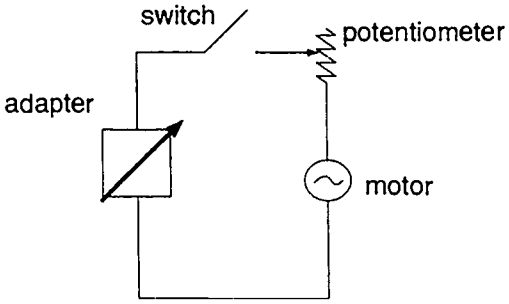

   d. Solder the other adapter wire to the other lead of the motor.
   e. Test the circuit: plug in the adapter, flip the switch to "ON", turn the shaft of the pot clockwise: the motor shaft should rotate with increasing speed.

4. Prepare the wood block.
   a. If the block is not pre-cut, clamp it firmly and cut it to the length that will allow its bottom to rest about 2-1/2" from the top of the *closed* container, with its edges touching the sides (**not** the front and the back) of the container.
   b. With the wood clamped firmly, drill a 1" hole through the center. The motor should fit snugly in this hole. Use coarse sandpaper to enlarge the hole if necessary.
5. Hot glue the motor into the wooden block. Make sure that the top side of the motor is flush with the top of the wood.
6. Mount the cow magnet onto the motor shaft:
   a. Wrap enough electrical tape around the middle of the magnet to make the snap-on-strap fit very snugly.
   b. Cut the wall anchor in half. Slip one piece over the motor shaft as far as possible but without touching the motor body.
   c. Slip the snap-on-strap over the anchor-covered motor shaft.
   d. Retest the circuit. Does the magnet turn freely and evenly? Recenter the magnet if needed.

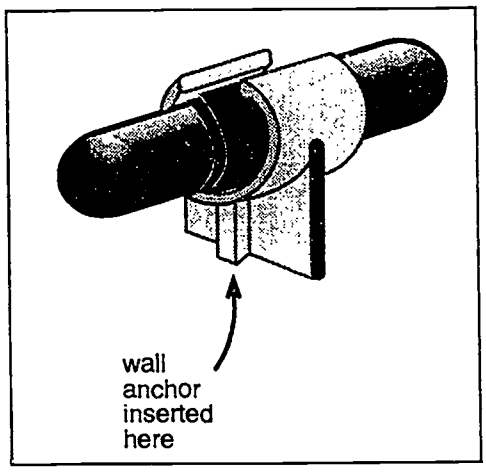

7. Put the wood block into the container (onto the cup of plaster, if you are using it). On the container side walls, mark the positions at which you wish the mounting screws to be placed to hold the wood block in place. See Figure 1. Melt small holes at these marks. You may also need to make starter holes in the wood block with a hammer and nail. Do not yet fasten the block to the container.
8. Remove the hex nut and one washer from the switch shaft. Insert the switch into its hole orienting it so that the soldered lugs are at the middle and lower positions. (In this orientation, when the toggle is up the switch is on and when the toggle is down it is off.) Replace the washer and replace and tighten the outer hex nut.
9. Remove the hex nut and one washer from the potentiometer shaft. Insert the shaft and the stop of the potentiometer through the holes in the front of the container. Replace the washer and hex nut and tighten the nut. Attach the knob to the potentiometer shaft. (A drop of hot glue may be needed to hold the knob on the shaft.)
10. If you are using them, put the cup containing the plaster of Paris, or the bag of sand into the center of the container. Secure the wood block with wood screws.
11. If you are using them, attach the rubber feet. Cover the container.

The Piezoelectric Popper

by Ron Perkins*

A film canister attached to a piezoelectric igniter is used to demonstrate the energy contained in two drops of a flammable liquid.

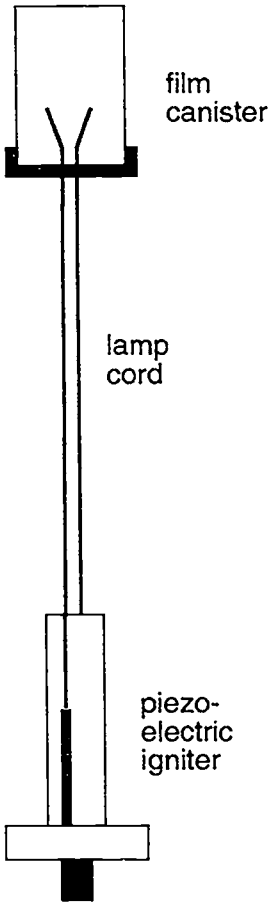

Materials

- ___ *piezoelectric igniter ($16 at a hardware store, or $3.50 each + $4.75 total s/h at Educational Innovations, 203/629-6049)*
- ___ *empty film canister (available from any photo developer)*
- ___ *leather punch or ball point pen*
- ___ *20 cm lamp cord*
- ___ *craft knife*
- ___ *wire stripper*
- ___ *not-insulated butt connector*
- ___ *electrical tape*
- ___ *3/4"-dia. heat shrink tubing (optional)*
- ___ *flammable liquid: ethanol, methanol, acetone, perfume*
- ___ *eye dropper*

Preparation

1. Punch a hole in the cap of the plastic film canister with the leather punch, or ball point pen.
2. Insert the lamp cord through the top of the lid. Do not remove any of the wire insulation, but separate the strands slightly, about 7 mm, to insure a proper spark gap.
3. On the other end of the lamp cord, pull apart the two insulated strands a distance of about 8 cm. Cut off 6 cm of wire from one of the strands. Remove 1 cm of insulation from this short side. Remove 5 cm of insulation from the long side.

* Al Delfiner presented "Micro Explosions" at *The Chemistry Teachers' Club of New York*, January 1993.

4. Attach the bare end of the short wire to one end of the butt connector. Attach the butt connector to the electrode in the piezoelectric igniter.
5. Twist the strands of the bare wire from the longer side and lay the twisted wire next to the long silvery wire of the igniter. Secure them together with a piece of electrical tape.
6. Starting with the end near the button of the igniter, completely wrap the exposed bare wires with electrical tape. As an option, use heat shrink tubing over the electrical tape to make a nice, neat looking apparatus.
7. Test by pushing in the button of the piezoelectric igniter. If it is properly assembled, you should see a spark jump a distance of almost 1 cm.

Presentation

0. Wear safety glasses and ear plugs.
1. Add two drops of a flammable liquid to the film canister. Cap, shake, and warm the canister in your hands. **Warning: To avoid a flaming missile, do not use more than two drops.**
2. Warn people that the popper makes a loud noise and that they should cover their ears.
3. Holding the igniter in one hand and the lamp cord in the other (don't hold the film canister!), point it away from people and push the button.

Baster Ball Cannon

Shared by Mike Barondeau, author unknown*

Besides being an excellent attention getter (more surprising than a hurled eraser), the baster ball cannon demonstrates combustion, the fire triangle, and explosions.

Materials

- ___ *lantern lighter (e.g., Coghlan's No 503A; available at hardware or sporting goods stores)*
- ___ *multi-purpose filler (e.g., Rex Automotive Products 80C-VP); available at auto parts or hardware stores)*
- ___ *lighter fluid or other combustible, e.g., ethanol or methanol*
- ___ *either hole or star leather punch, or 3/16" dia. cork borer and metal or wooden strip to fit inside the filler and act as a backstop*
- ___ *ping pong ball*
- ___ *2 small adjustable wrenches*
- ___ *screwdriver*

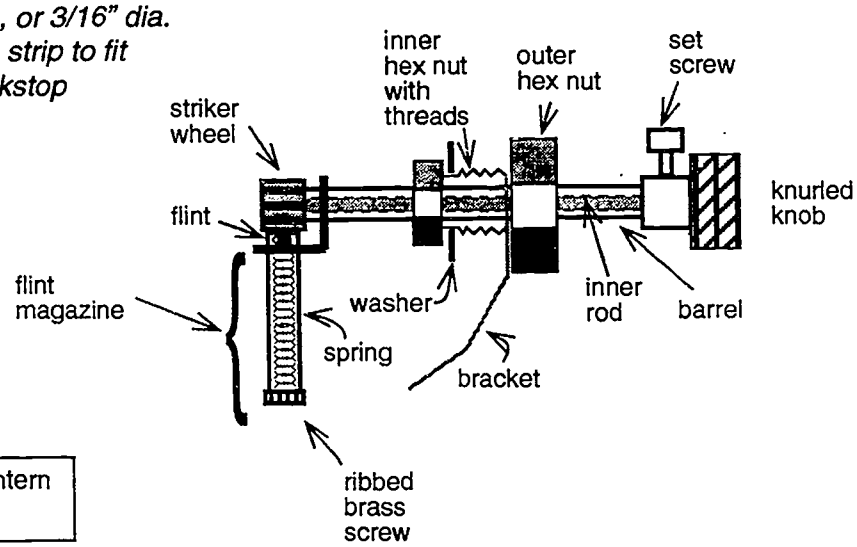

Figure 1. A lantern lighter.

Procedure

1. Remove the tube from the multi-purpose filler.
2. Make a 3/16" dia. hole in the side of the filler bulb, about 1-3/4" from the open end of the bulb (Figure 2a). You may need to "scrunch" the bulb to get a leather punch to the right position.
3. Before proceeding, examine the lantern lighter. Refer to Figure 1 above. Notice the striker wheel that rotates and rubs against the vertical brass rod (the flint magazine) when you turn the knurled knob that is held in place by a set screw. If you rotate the knob very sharply, a spark should appear at the striker wheel.

* ICE Supplements Workshop, University of Wisconsin 1987

4. Caution: Inside the knurled knob of the lantern lighter is a tiny spare flint that looks like a miniature rabbit-food pellet. Unscrew the set screw on the knurled knob and, cupping your hand around the knob to catch the spare flint, remove the knob. Remove the screw, the outer hex nut, the washer, and the bracket. Discard the bracket.

   Removing the knob exposes the inner rod of the lighter. *It is important not to push the inner rod through the outer barrel.* If you do, the striker wheel will be pushed out of position and no longer make contact with the flint magazine.

   What should you do if this happens? Slowly unscrew the ribbed brass screw from the top end of the flint magazine, cupping your hand to catch the spring that is inside. Remove the spring and the tiny flint from the magazine. Push the striker wheel back into position. Replace the flint, spring and ribbed brass screw into and onto the flint magazine. Remember not to push the inner rod of the lighter through the barrel.

5. With your index finger holding the striker wheel in its proper position, insert the lighter into the filler bulb, and push the rod of the lighter that holds the knurled knob through the hole, up to the inner hex nut.
6. On the outside of the filler bulb, replace the washer and screw the outer hex nut onto the rod. Also reattach the knurled knob with the set screw. Figure 2b shows the completed assembly.
7. You may wish to practice striking the lighter without fuel in the bulb first. Strike the lighter by turning the knurled knob *rapidly* and sharply between your thumb and index finger. (The best way to do this is to hold the knob and snap your finger.) It should spark.

Figure 2. a. Position and dimensions of punched hole (front view). **b.** Completed cannon (side view).

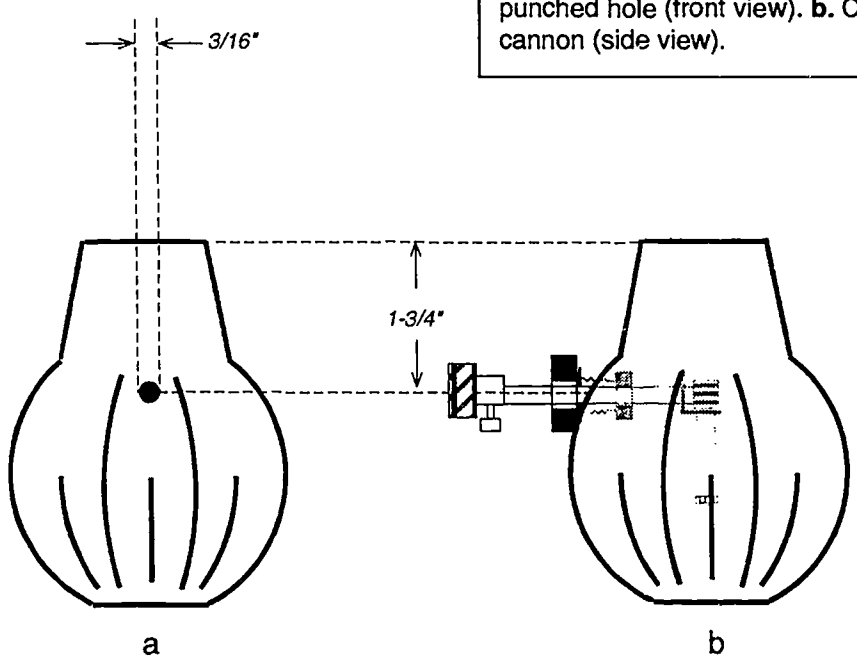

8. When you are confident in your striking technique, pour a milliliter of methanol, ethanol, or lighter fluid fuel into the filler bulb, *being careful not to wet the flint.* (Using too much fuel will cause a large flame to persist until all the fuel is consumed.) Allow the bulb to sit for a few minutes while the fuel vaporizes. Push a ping pong ball snugly into the mouth of the filler bulb. *Put on safety glasses.* Point the cannon away from fragile or living objects and strike the lighter. To fire again, squeeze the bulb a few times to exchange the carbon dioxide and other combustion products with air.
9. *Do not store your baster ball cannon with fuel in it.* The materials used in the ping pong ball will dissolve and become misshapen if exposed to alcohols and lighter fluid for a prolonged time. You can get replacement flints from a drug store, supermarket, or hardware store. They are displayed near cigarette lighters.

How do you use this?

For the "BBC" to work, there must be oxygen, vaporized fuel, and a spark from the striker within the bulb. The importance of oxygen to initiating and sustaining combustion, and the non-combustibility of carbon dioxide, can be demonstrated by attempting to explode the BBC immediately after an explosion: It won't work until the carbon dioxide is exchanged with oxygen. You might have to prove to your students that it is carbon dioxide that is produced in the combustion.

It might be interesting to compare the flight distances of ping pong balls when propelled by the explosion of equal quantities (volumes or masses) of different fuels such as ethanol, methanol, and lighter fluid.

Neon Lamp Cord: Experiments in Vision

By Ron Perkins

With this small and simple lamp you can show your students how fast their eyes and brains work together. You can also discuss the interactions between electrons and atoms, and light emission.

Materials

- ___ *neon bulb with 100 K dropping resistor (Radio Shack #272-1100) [or a neon bulb and a 100 K resistor]*
- ___ *2 m electrical lamp cord or extension cord with standard 120 V plug*
- ___ *15 cm, 1/4"-dia. heat shrink tubing (to fit over lamp cord)**
- ___ *14 cm, 1/8"-dia. heat shrink tubing (to fit over a single strand of the lamp cord) [if neon lamp and resistor are separate, you will need 20 cm]**
- ___ *soldering gun and solder*
- ___ *wire cutters and strippers*
- ___ *centimeter ruler*
- ___ *heat gun*
- ___ *scissors*

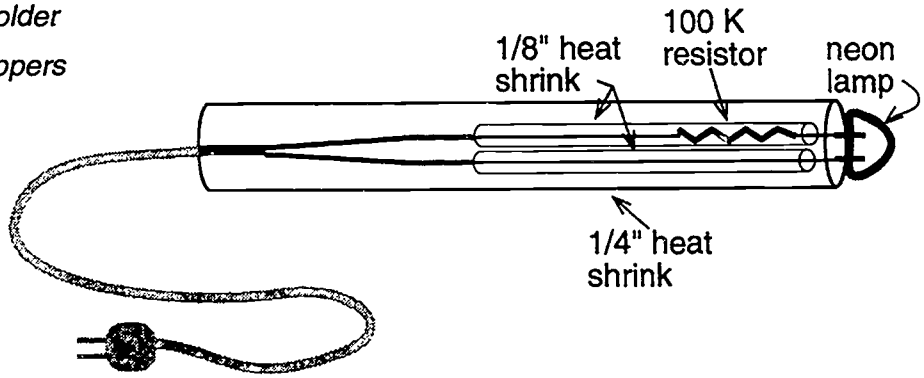

Preparation

0. If the neon bulb is separate from the 100 K resistor, you will have to solder them together. If they are already in a single unit, go on to step 1. To join the bulb and resistor:
   a. Twist a resistor lead and a neon bulb lead together and solder this joint. Keep the soldered connection as small as possible.
   b. Cut a 6-cm piece from the 1/8"-diameter heat shrink tubing and slip it over the resistor, **right up to the neon bulb**. Leave 1.5 cm of the loose end of the resistor wire exposed.
   c. Starting with the end nearest the bulb, use the heat gun to shrink the tubing. Set the bulb and resistor aside.

* Electrical tape *should not be* used in place of heat shrink tubing.

1. If you are using an extension cord, cut off the receptacle end (not the plug). Slide the 1/4" heat shrink tubing over the end of the 2-m electrical cord. Push it to the middle of the cord.

2. Pull apart the leads of the lamp cord to a distance of 15 cm. (If the dropping resistor is separate from the neon bulb, cut off 9 cm of one strand of the lamp cord.)

3. At the end of each strand of wire, strip off the insulation so that 1.5 cm of bare wire is exposed. Be careful not to cut through the wire.

4. Cut the 14-cm piece of 1/8"-diameter heat shrink tubing in half. Slide the pieces over each wire to the point where the two strands are joined.

5. Twist each bare wire of the lamp cord around a wire lead of the bulb with the resistor. Solder these connections. Keep the soldered connection as small as possible.

6. When the solder joints are cool, slide the lengths of 1/8" heat shrink tubing towards the neon lamp **as far as they will go**. (If you needed to solder the resistor to the neon bulb, slide the heat shrink tubing only up to the end of the tubing covering the resistor.) *Allowing any possibility that the two leads of the lamp may touch each other will make this a potentially very dangerous device. A short circuit will blow fuses, or trip a circuit breaker.*

7. Starting with the end nearest the bulb, use the heat gun to shrink the tubing around each wire.

8. When cool, slide the larger heat shrink tubing up and 3 mm over the glass base of the neon bulb. Starting with the end nearest the bulb, use the heat gun to shrink the tubing around the cord.

Presentation

1. Plug the neon lamp cord into a 110 V AC power source. Turn off the room lights.

2. Twirl the glowing lamp in a large circle. A broken, dashed circle of light is observed. Experiment with the speed and radius of your twirling.

How does this work?

A. What happens in the neon bulb

When the voltage on the neon bulb is greater than about 40 V, electrons emitted from the anode are accelerated toward the cathode and collide with neon gas atoms (Figure 1).

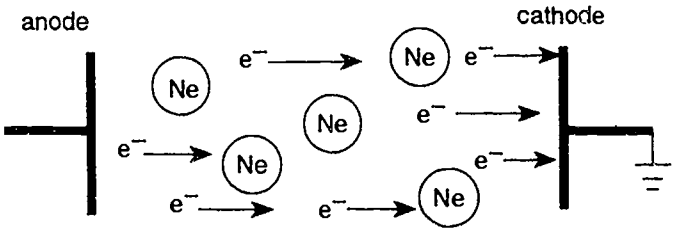

Figure 1. A neon lamp at ±40 V.

Figure 2 shows how in the collision, the neon atoms are ionized (the incoming electron "chips off" an electron from the neon atom). If they collide again, the ionized atoms and electrons can recombine. Then there is excess energy that is released in the form of photons (light particles). This is the glow that we see around the cathode.

Figure 2.

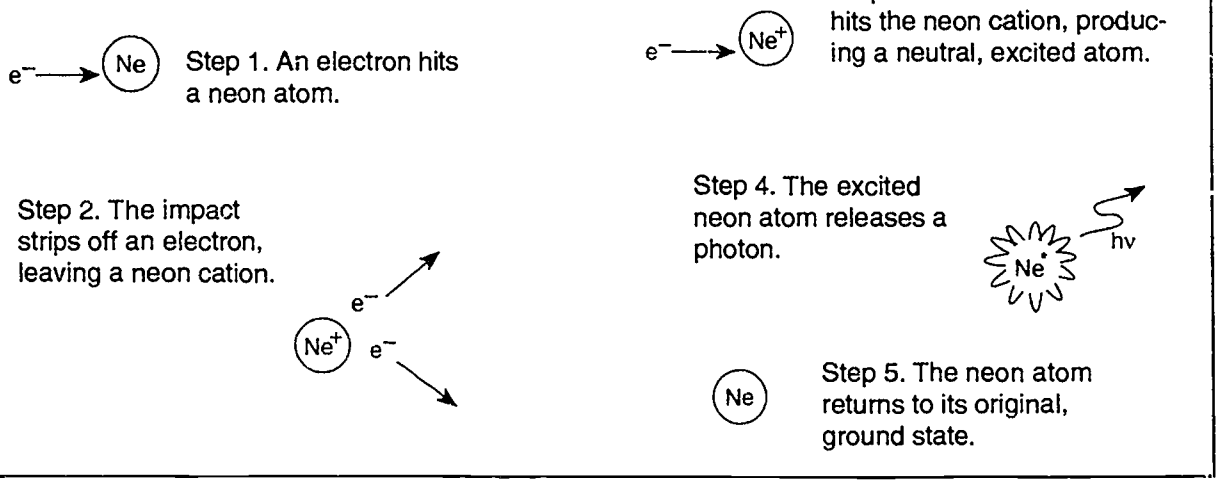

If a constant voltage is applied, e.g., 40 V DC from a small power supply, excess energy is continuously released, resulting in an uninterrupted flow of light from the bulb. However, if an alternating voltage is used, that is, 110 V AC, the voltage, and hence the emitted light, fluctuates with time as shown in Figure 3. The lamp is on only when the voltage is above 40 V or below –40 V (shaded regions in Figure 3). Below 40 V the electrons don't have enough energy to ionize the neon atoms.

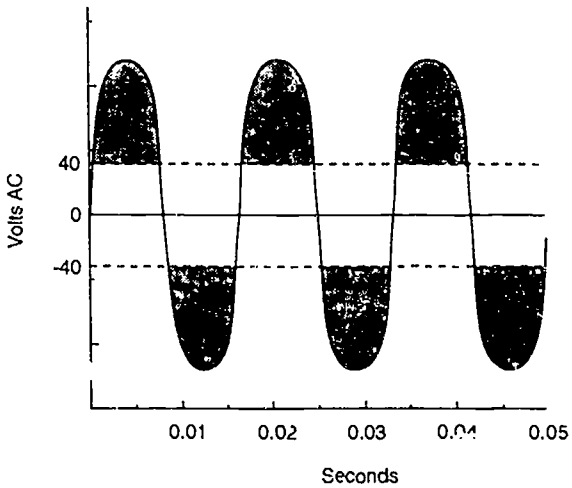

Figure 3.

B. How your eye perceives it

At 60 Hz line frequency, this fluctuation (of 120 flashes per second) is too fast for one part of the retina to detect when the lamp is held still. However, when you move the lamp quickly you can see the fluctuation because different parts of the retina are stimulated.

When the lamp is moved, the streak of light observed with the DC source and the dashed circle with the AC source is due to the persistence of vision. One continues to "see" an image for about 0.1 second after the retina of the eye is stimulated. This means that if 60 Hz AC is used, about 12 flashes of light should be seen when the lamp cord is moved (0.1 sec x 120 flashes/sec = 12 flashes).

The chemistry of vision is quite well understood (*Chemical and Engineering News*, 28 November, 1983, pp. 24-36). The light-absorbing system, the chromophore, is within the rods and the cones of the eye. The chromophore contains 11-*cis*-retinal, or rhodopsin. Light causes this *cis* molecule to change to the *trans* form. This begins a series of chemical changes leading to a signal in the brain, "I see the light!" The message to the brain lasts for about 0.1 second.

It has been known for many years that in the presence of high intensity visible light (about 380 nm wavelength) the *trans* form slowly converts back to the *cis*. Until recently, however, the mechanism in the presence of low intensity light has been unknown. Many thought that the liver was somehow involved in the vision system. In the June 1987 issue of *Chemical and Engineering News*, it was announced that "a membrane-bound enzyme, specific to the eye, converts all *trans*-retinal to *cis*-retinal in the absence of light."

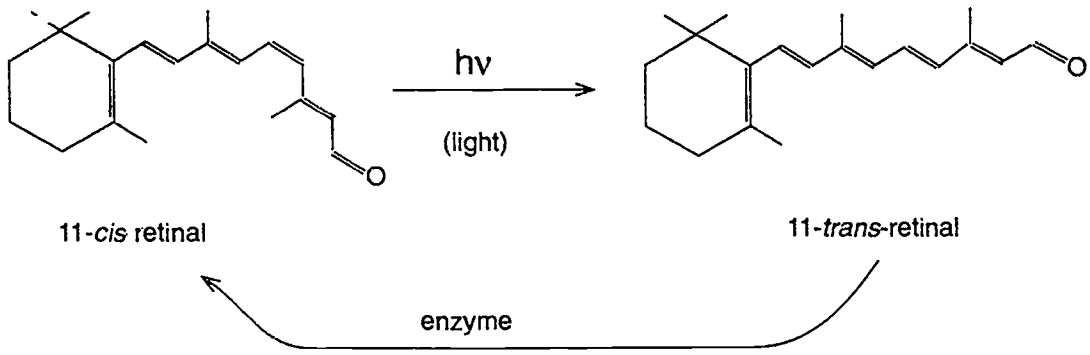

BEST COPY AVAILABLE

Templates for Overhead Projection

On the following pages are illustrations that may help you explain how a neon light bulb works and the chemistry of vision. We encourage you to photocopy these pages onto transparency sheets and use them in your classroom.

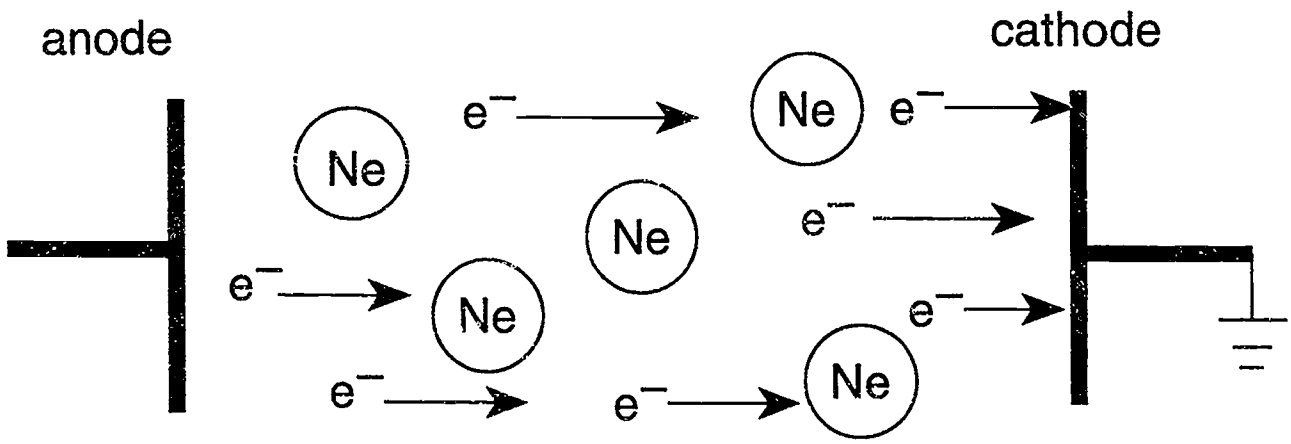

A neon lamp at ±40 V.

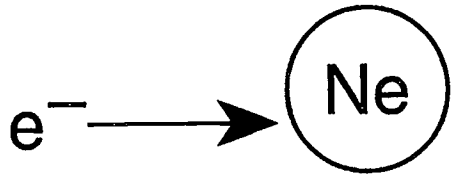

Step 1. An electron hits a neon atom.

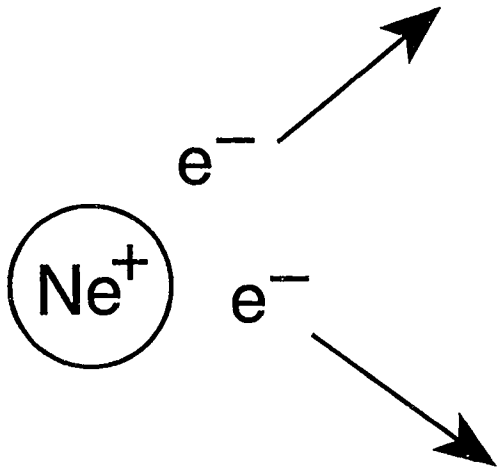

Step 2. The impact strips off an electron, leaving a neon cation.

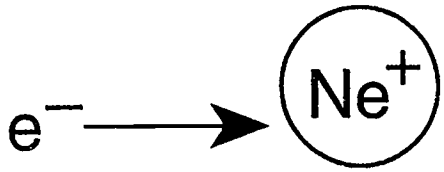

Step 3. A second electron hits the neon cation, producing a neutral, excited atom.

Step 4. The excited neon atom releases a photon.

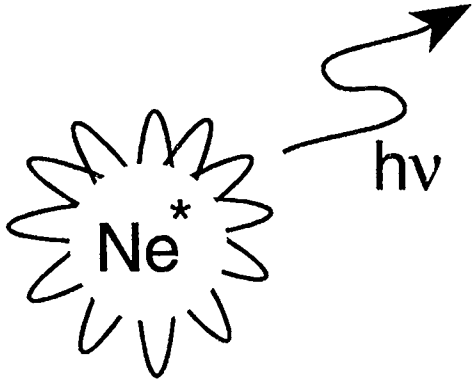

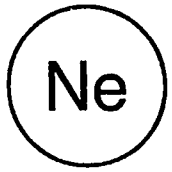

Step 5. The neon atom returns to its original, ground state.

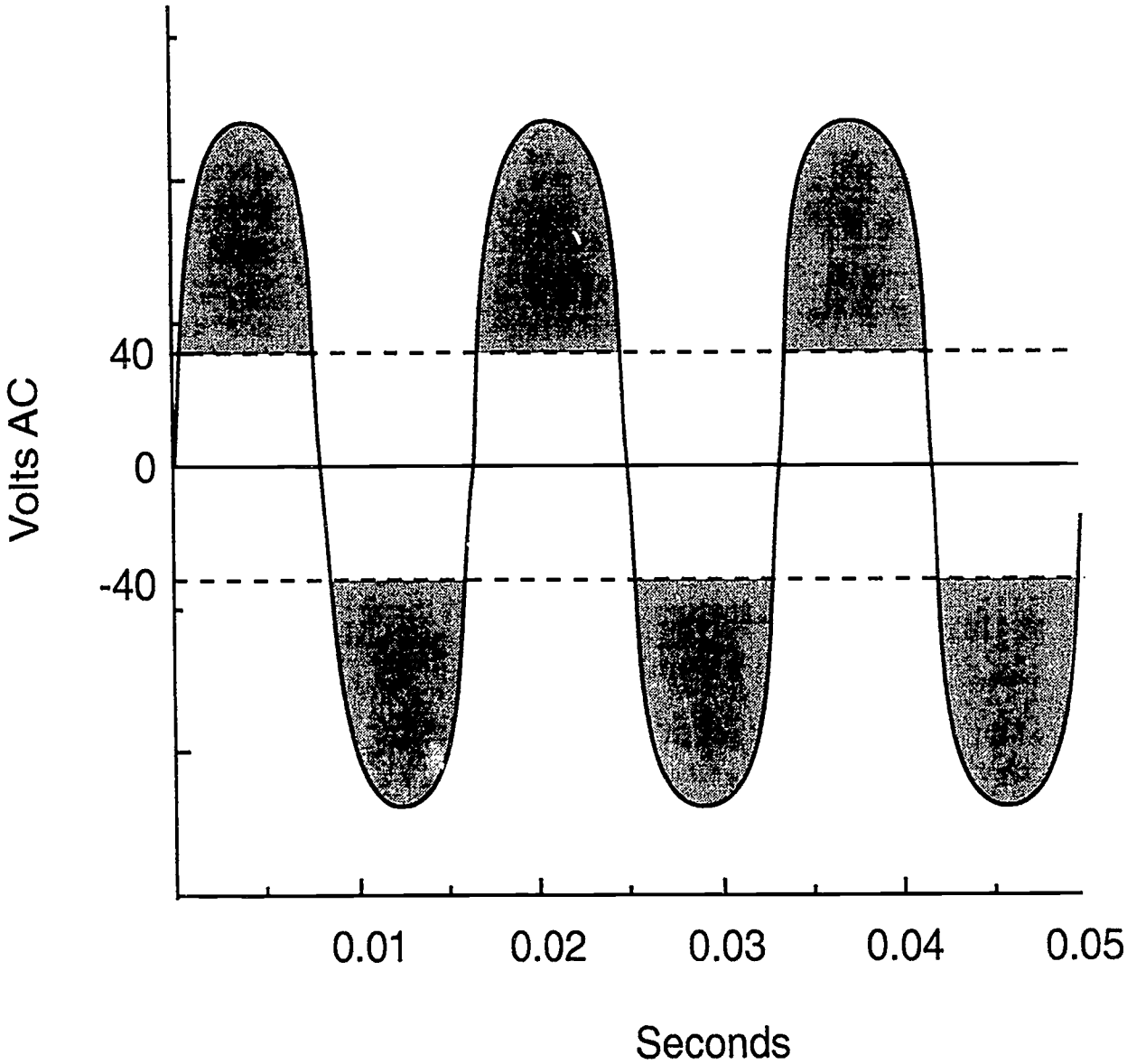

The neon lamp is on when the voltage is more than 40 volts or less than –40 volts.

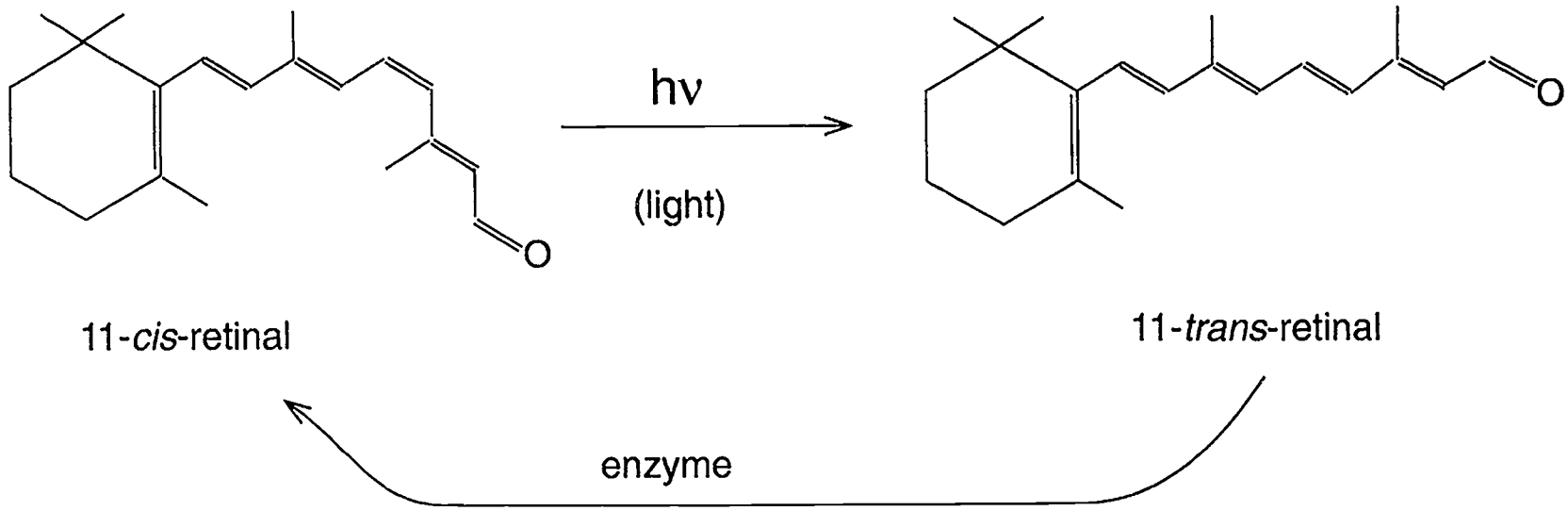

The light-absorbing system, or photodetector; the "chromophore" in your eye.

The BB Board

By Ron Perkins, Illustrations by Robert A. Shaner

Complex structures are understood better by using simple concrete models. The BB Board helps to show the atomic structure of solids. It can illustrate various types of crystal defects and can be used to demonstrate annealing, hardening, and tempering of steel.

Materials

__ *10" x 15 1/2" x 1/4" sheet of acrylic plastic with square corners (for example, Plexiglas®), available from a hardware store or a plastics supply house (see step 1)*

__ *table saw (optional, see step 1)*

__ *file and sandpaper (see step 1)*

__ *20 mL acrylic solvent such as methylene dichloride, ethylene dichloride or "Plaskolite® Solvent Cement"*

__ *10-mL syringe or eye dropper*

__ *about 1000 BB pellets (2/3 of a box of 1500)*

__ *sheet of stiff paper*

Assembly Directions

1. It is best to let your plastics supplier cut the plastic sheet to the correct dimensions, listed below. If you need to do the cutting yourself, follow the suggestions here and use the layout shown on the next page.

   __ *2 pieces at 9" x 7" x 1/4"*

   __ *2 pieces at 3/8" x 7" x 1/4"*

   __ *2 pieces at 3/8" x 8 1/4" x 1/4"*

   If you use a table saw with a veneer blade or carbide blade designed for plastic, you will get fairly smooth edges. Otherwise use a band saw or a jig saw and follow by filing and polishing. When laying out the cutting pattern, allow at least 1/4" for each cut for the width of the blade.

   Once the plastic is cut, sand or file any sharp edges by hand.

* Educational Innovations, 203/629-6049, will supply the Plexiglas® pre-cut, as a kit, for $9.75 + $4.75 s/h or a completed BB Board for $30.00 + $4.75 s/h.

Layout for cutting plastic pieces for one BB Board (Scale: 1" = 3").

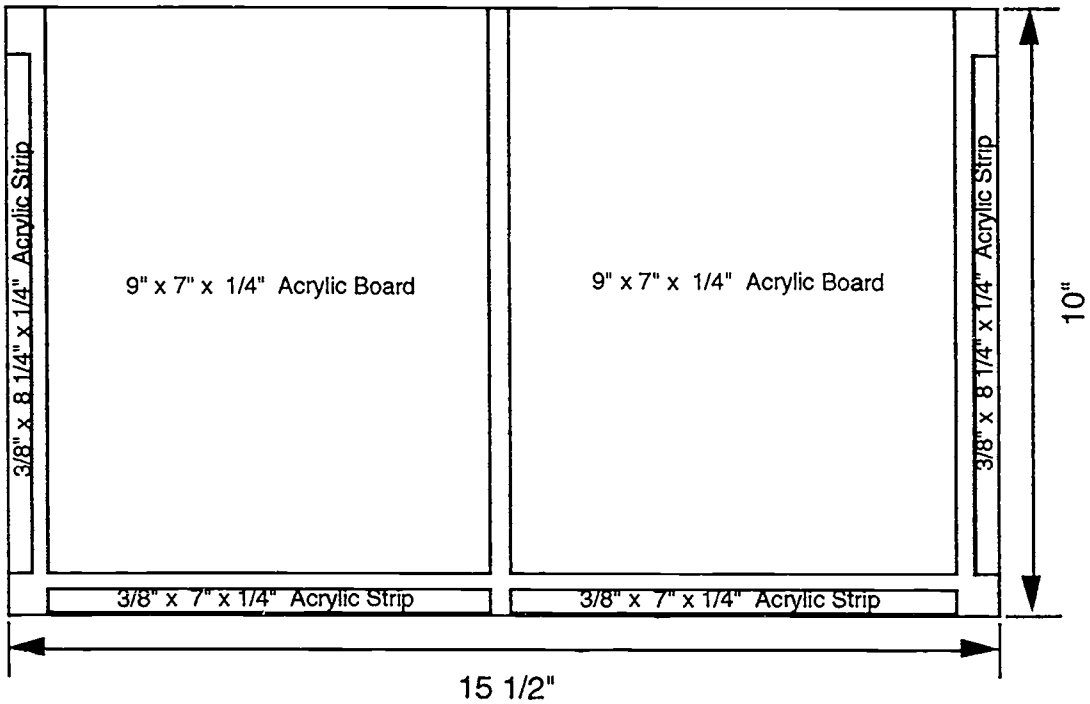

2. Remove the contact paper from **one** surface of each 9" x 7" board. Keep the contact paper on the bottom surface of each board to protect it from scratches. Remove all the contact paper from the narrow strips.
3. Place one of the shorter acrylic strips along the 7" edge of the top surface of one 9" x 7" acrylic board, **with the 3/8" surface side down**. Fill a 10-mL syringe or an eye dropper with the acrylic solvent. *Use adequate ventilation when working with this solvent, it is toxic.* Gently hold the acrylic strip to the board. Carefully and sparingly apply the solvent by slowly running the tip of the syringe along the adjoining edges. The solvent should easily flow between the two pieces as you move along the edge. If it does not, you may be applying too much pressure. You only need to hold the pieces together for about 10 seconds. During that time you may still move the strip if you need to make slight adjustments. Let the pieces set for 30 seconds before going on to the next step.

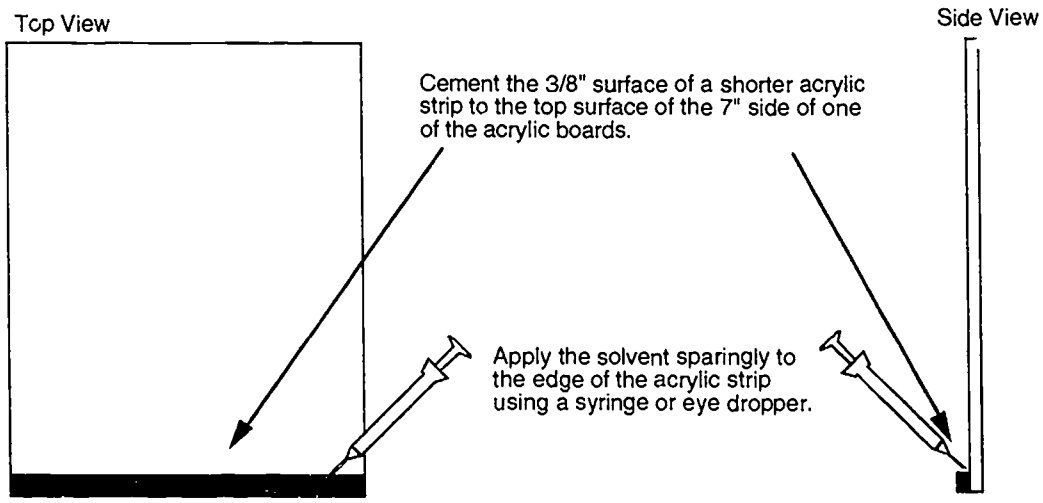

4. Position the two longer acrylic strips along the sides of the 9" x 7" board. Using the same technique as you did in step 3, cement these two strips to the 9" x 7" board and to the edges of the bottom acrylic strip.

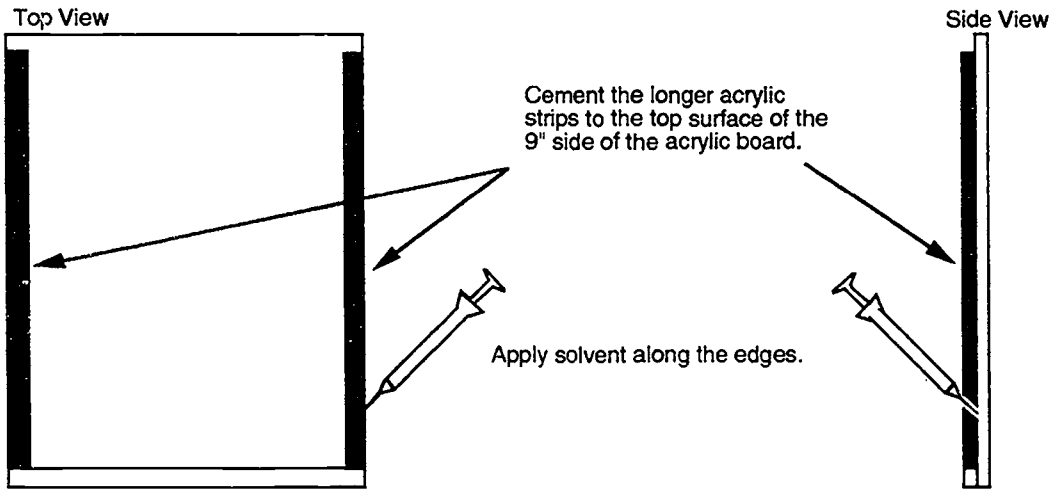

5. Remove any contact paper from the second 9" x 7" acrylic board. Place this board on top of the three acrylic strips so that the edges of the board are lined up with the outside edges of the three strips. Apply the solvent along the interface between this acrylic board and the three acrylic strips. **Allow the solvent to evaporate thoroughly before continuing, about 10 minutes.** (Tip the BB Board so that the solvent vapor, which is heavier than air, flows out of the crevices faster.)

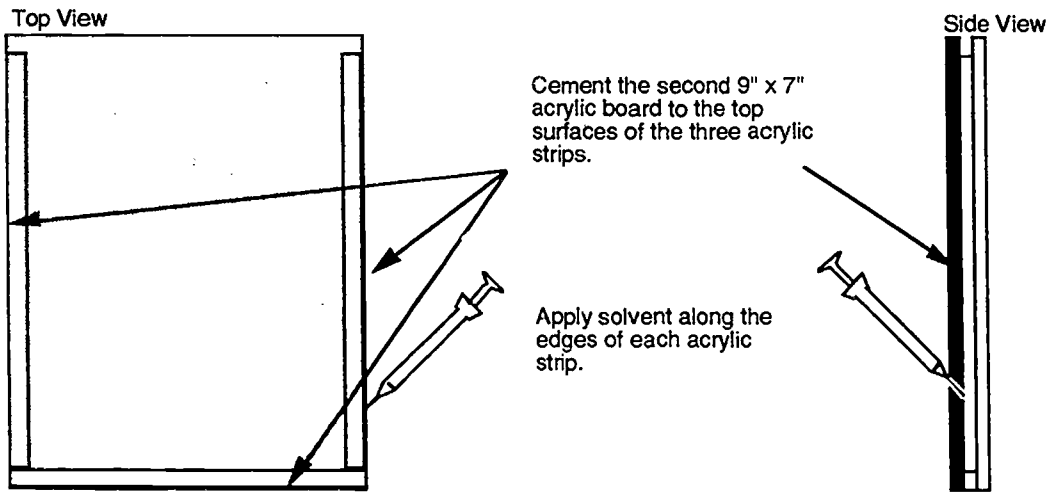

6. Make a chute for BBs using a piece of paper. Pour the BBs into the cavity between the two 9" x 7" acrylic boards until the cavity is slightly less than 2/3 full.

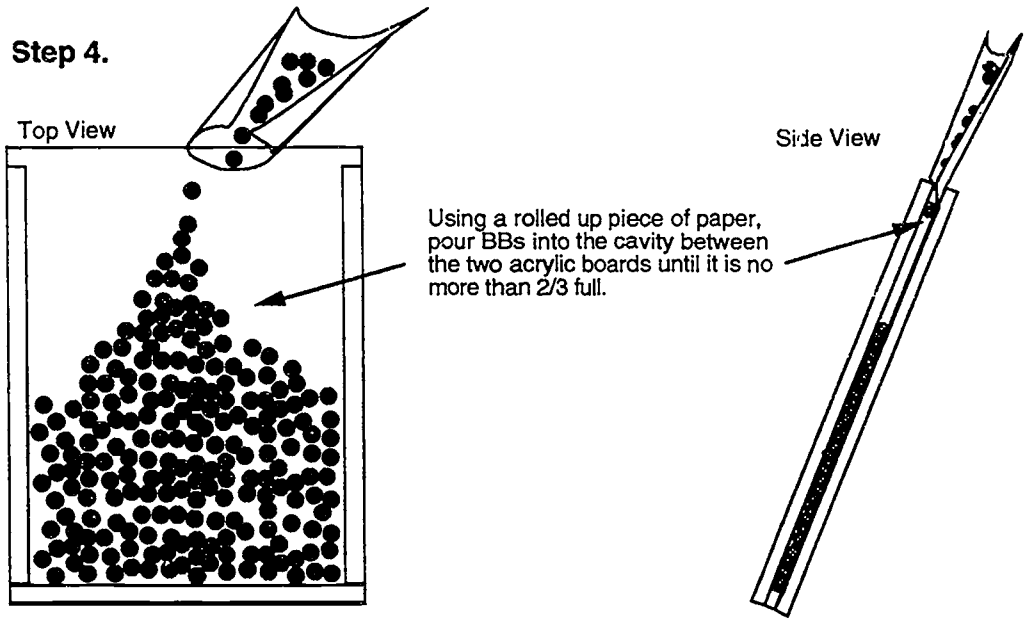

7. To seal the BBs inside the cavity, place the second short acrylic strip between the two acrylic boards. Using a minimum amount of solvent, cement the 3/8" surfaces to the inside surface of each acrylic board.

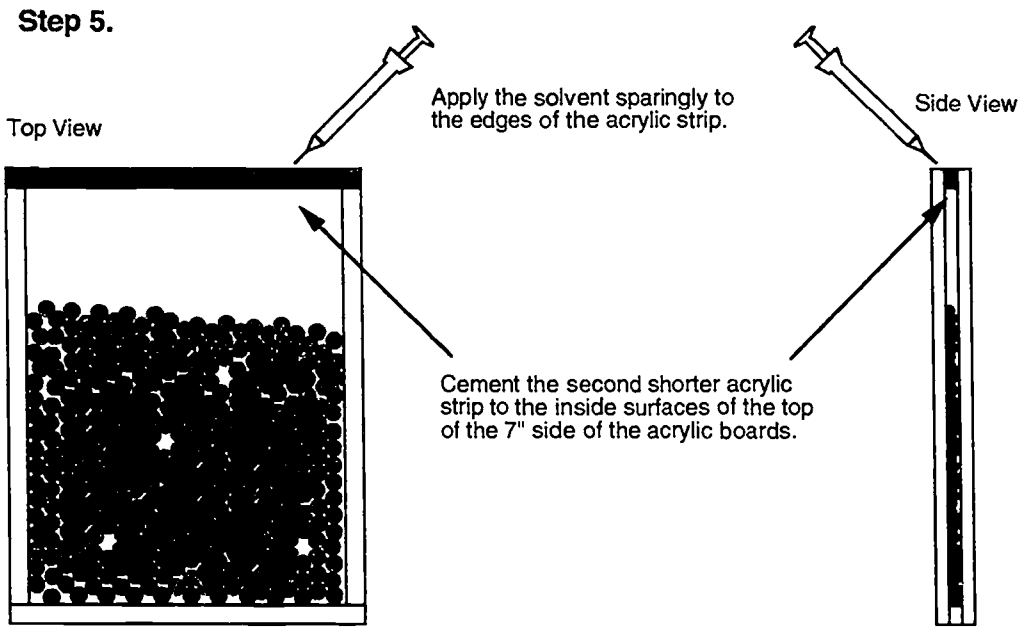

Presentation: The Heat Treatment of a Bobby Pin

Materials

__ *2 steel bobby pins*

__ *Bunsen burner*

__ *tongs*

__ *1/2 cup water*

__ *BB Board*

I. Annealing

Procedure:

1. Heat the bent end of a steel bobby pin to a red-hot temperature in a Bunsen burner flame.
2. Remove the bobby pin from the flame and allow it to cool slowly.
3. Spread the ends of the cooled bobby pin. They will stay apart. The bobby pin is no longer springy.

Explanation: Heating to a red-hot temperature causes the metal atoms in the bobby pin to move faster and more freely. Slow cooling allows the atoms to adopt a more ordered arrangement causing a more perfect crystal of iron to form. The more perfect the crystal of a metal is, the easier it is to bend the metal because the atoms can "slide" past one another more easily.

This process of thermal treatment of a metal is called **annealing**. An example of annealed iron is wrought iron, which is easily bent into decorative railings.

BB Board Representation: Place the BB Board on the stage of an overhead projector and project the image of the BBs onto a screen. Explain that the BBs represent atoms of the iron. To represent heating of the bobby pin, slide the board rapidly from side to side. The BBs should shuffle into a random arrangement. To represent the slow cooling of the annealing process, decrease the rate at which you slide the board, moving the board back and forth ever more gently, watching the order develop. It may help to raise one end of the BB Board slightly.

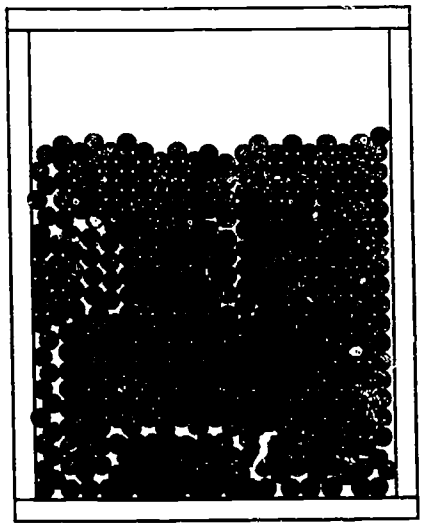

It is common to see "holes" and a few "defect lines", as in the figure at right. The defect lines are seen because order develops with different orientations in different sections of the board.

II. Hardening

Procedure:

1. Heat the bent end of a steel bobby pin to a red-hot temperature.
2. While it is red-hot, quickly immerse it into water.
3. Spread the ends of the cooled bobby pin. It breaks.

Explanation: Quick cooling of the red-hot, fast-moving, iron atoms freezes them into a disordered phase with many defects. The many small areas of order, separated by defect lines, do not allow the atoms to move past each other easily. In fact, breakage can easily occur along these defect lines. A **hardened** metal is hard, but brittle.

Knives keep a sharp edge because they are made from steel which has been hardened. They often break, however, when used for prying.

BB Board Representation: To represent the fast cooling of the hardening process, rapidly slide the BB Board back and forth to produce a random distribution, as in part I above. Then stop suddenly.

You should see many "holes" and "defect lines". When a hardened piece of metal is bent far enough, it will break along these defect lines.

BB Board showing the disorder of atoms in hardened metal.

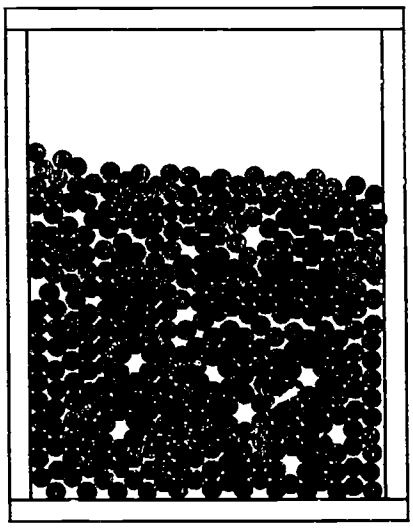

III. Tempering

Procedure:

1. Slowly lower the bent end of a **hardened** steel bobby pin into an area about 10 cm above the flame of a Bunsen burner. Heat it until an iridescent blue oxide coating is observed.
2. Remove the bobby pin from the flame and allow it to cool slowly.
3. Spread the cooled bobby pin and release. The metal should spring back.

Explanation: The process of gentle heating from the hardened phase is called **tempering**. This process introduces more order into the crystalline structure, somewhere between the annealed and hardened phases. The metal becomes springy.

Bobby pins and springs are made from iron which has been tempered.

BB Board Representation: To represent the gentle heating of the tempering process, start from the random distribution of the hardening process. Gently slide the BB Board back and forth until you see a few areas of order develop. Then stop.

You should see several areas of order separated by "defect lines". The degree of ordering of the iron atoms in the tempered phase is intermediate between the hardened and annealed phase.

BB Board showing the ordering of atoms in tempered metal.

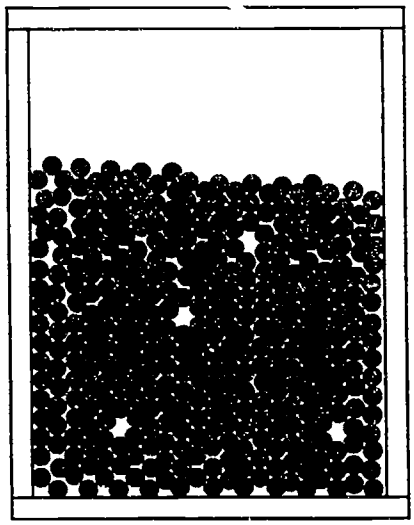

Mass Spec Demonstration Board

By Robert Shaner

The demonstration board that you are about to assemble is designed to be used on an overhead projector to help students visualize what takes place in an actual mass spectrometer. Using the board, you can easily convey to students how electric and magnetic fields deflect various ions. Ball bearings of different sizes represent the ions being released from an ion gun, which is modeled by a chute. Adjusting the slope of the board (and thus the chute) is analogous to varying the electric field strength. Changing the position of a magnet varies the magnetic field strength on the ball bearings as they roll through the "analyzer."

Materials

Refer to the templates on pages 39 and 40 of this document, as necessary.

- ___ *9" x 12" x 1/4" sheet of acrylic plastic (Lucite® or Plexiglas®) with square corners, available from a hardware store or a plastics supply house (see step 1)**
- ___ *table saw (optional, see step 1)*
- ___ *file and sandpaper (see step 1)*
- ___ *drill*
- ___ *1/4" and 11/64" drill bits*
- ___ *(optional) 1/8" drill bit; 1/8"-dia. nail or pin*
- ___ *20 mL acrylic solvent such as methylene dichloride, ethylene dichloride, or "Plaskolite® Solvent Cement"*
- ___ *10-mL syringe or eye dropper*
- ___ *1" wide, or wider, masking tape, about 14"*
- ___ *8" x 3" piece bubble plastic as used for packing fragile items (small bubbles)*
- ___ *1 alnico large rectangular magnet (available from a hardware store)*
- ___ *2 ea. 1/4"-20 flat washers*
- ___ *2 ea. 1/4"-20 steel nuts*
- ___ *1 ea. 1/4"-20 acorn nut*
- ___ *1 ea. 5"-long 1/4"-20 threaded rod*
- ___ *2 ea. #8-32 brass washers*
- ___ *2 ea. #8-32 brass nuts*
- ___ *2 ea. #8-32 1" brass round head bolt*
- ___ *≥3 ea. ball bearings of varying sizes (available from a hardware store)*
- ___ *1 ea. glass or plastic marble*

* Educational Innovations, 203/629-6049, will supply the Plexiglas®, cut & drilled as a kit for $12 + $4.75 s/h.

Assembly Directions

1. It is best to let your plastics supplier cut the plastic sheet to the correct dimensions, listed below. If you need to do the cutting yourself, follow the suggestions here and use the layout on page 34.

   If you use a table saw with a fine-toothed blade such as a veneer cutting blade or with a carbide blade designed for plastic, you will get fairly smooth edges. When laying out the cutting pattern, allow at least 1/4" for each cut for the width of the blade. Cut the plastic into the following dimensions:

   ___ *1 piece at 9" x 8" x 1/4"*

   ___ *1 piece at 9" x 1" x 1/4"*

   ___ *2 pieces at 4-1/2" x 1" x 1/4"*

   ___ *2 pieces at 2-1/2" x 1" x 1/4"*

   ___ *2 pieces at 1/2" x 1" x 1/4"*

2. On pages 39 and 40 of this document are templates for drilling the plastic pieces. Copy and cut out the templates. Align the edges of the templates with the matching plastic pieces. At the following positions drill two holes in one of the acrylic strips and three holes in the 9" x 8" board:

On one 2 1/2" x 1" x 1/4" strip	*Drill Size*
1/2" from the right side and 1/2" from the top	*11/64"*
1/2" from the left side and 1/2" from the top	*11/64"*

On the 9" x 8" x 1/4" board	*Drill Size*
4 1/2" from the right side and 1" from the top	*1/4"*
3" from the right side and 2 1/2" from the top	*11/64"*
3 1/4" from the right side and 4" from the top	*11/64"*

3. Place all the plastic in front of you. Position the 9" x 8" board so that the drilled holes are at the top and to the right of the board. Remove any contact paper from the top surface. Keep the contact paper on the bottom surface to protect it from scratches. Remove the contact paper from each acrylic s[illegible]p.

4. Fill the 10-mL syringe with acrylic solvent. *Use adequate ventilation when working with the solvent. Avoid breathing the vapors.*

   In the next few steps you will make a shallow three-sided box out of the board and 5 acrylic strips. The inside walls of the box will be 1" high.

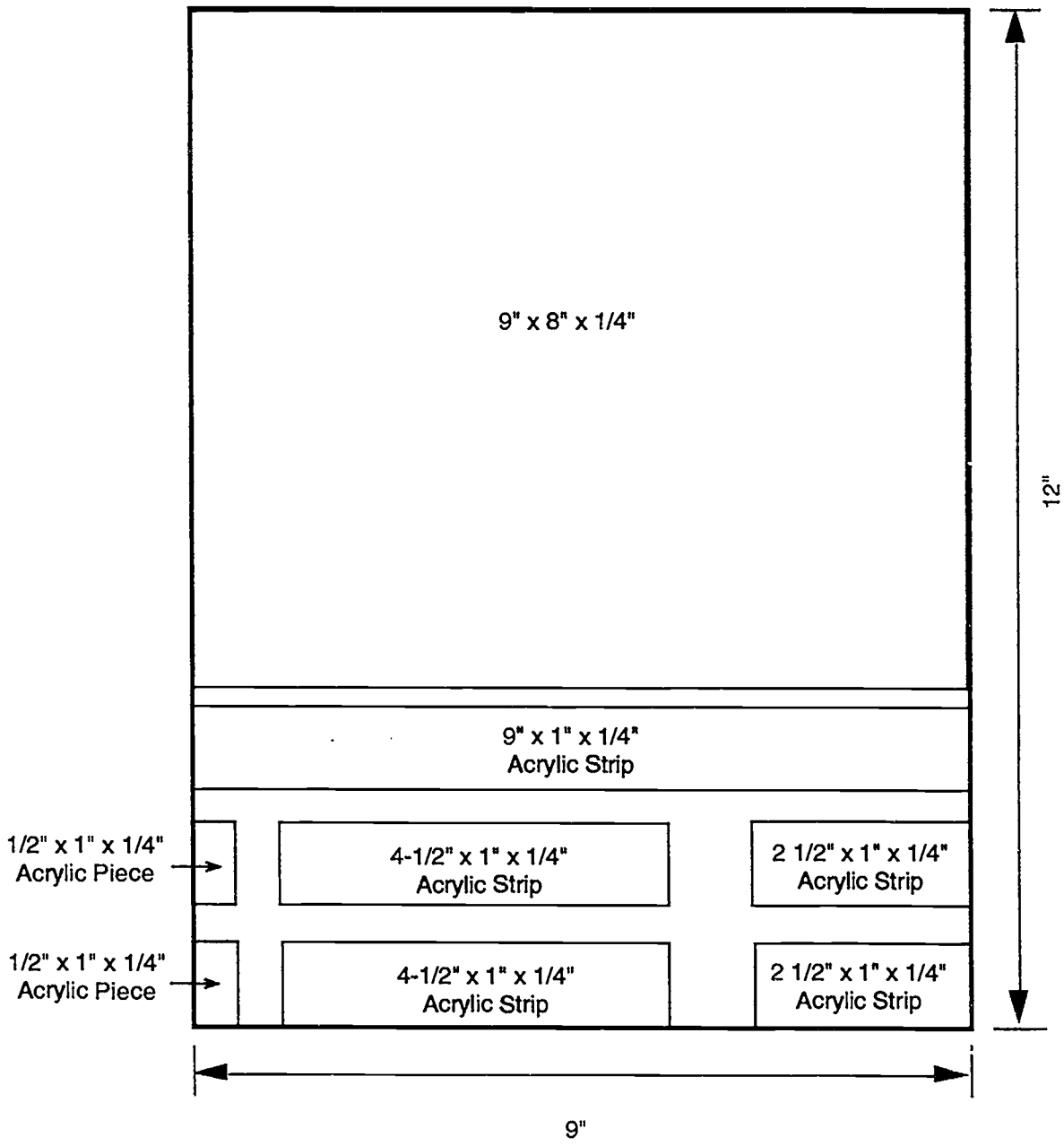

Layout for cutting pieces for one demonstration board (Scale: 1 inch = 2 inches)

5. Place the narrow surface of the 9" x 1" x 1/4" acrylic strip on the top surface of the board, along the lower 9"-edge. Gently hold the acrylic strip to the board and slowly and sparingly apply the solvent by running the tip of the syringe along the adjoining edges. The solvent should easily flow between the two pieces as you move along the edge. If the solvent does not flow between the pieces, you may be applying too much pressure. You only need to hold the pieces together for about 10 seconds. During that time you may still move the strip if you need to make slight adjustments. Let the pieces set for 30 seconds before going on to the next step.

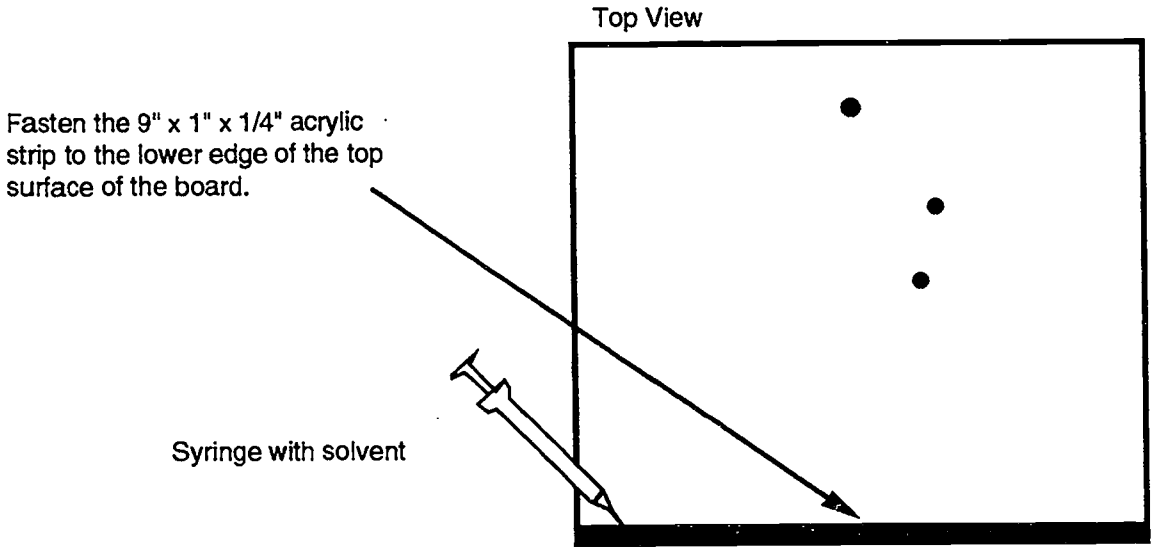

6. Position the 1/2" x 1/4" surfaces of the smallest acrylic pieces along the bottom sides of the top surface of the board. Your box should now have corners as in the figure. Fasten the strips into place using the same technique as above.

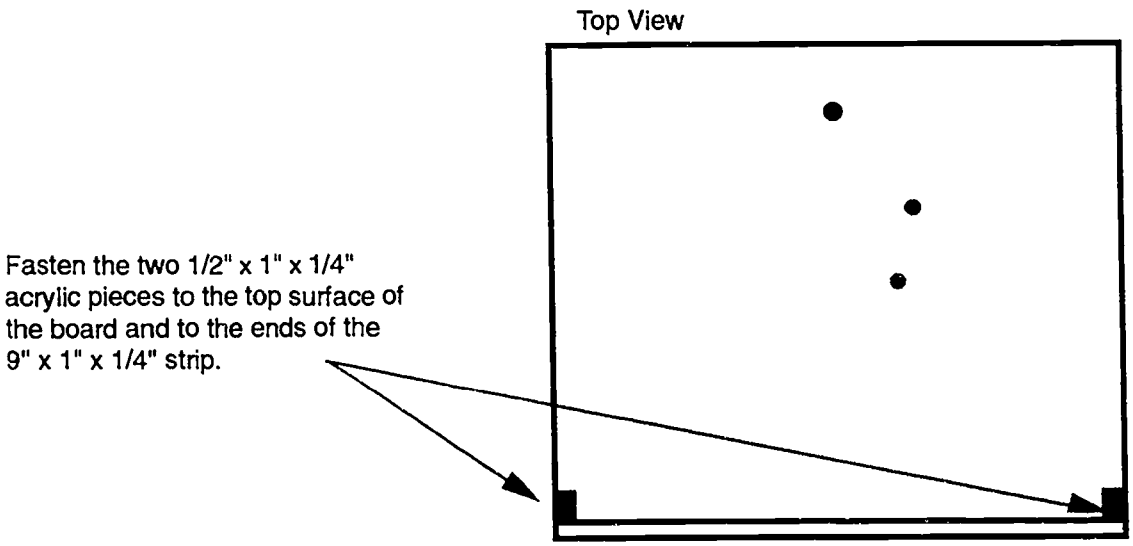

7. Position the two 4-1/2" x 1" x 1/4" acrylic strips on the top surface of the board, along the sides. Leave about a 1/16" gap to the 1/2" pieces that you attached in step 6 (see figure). Fasten the strips into place using the same technique as above.

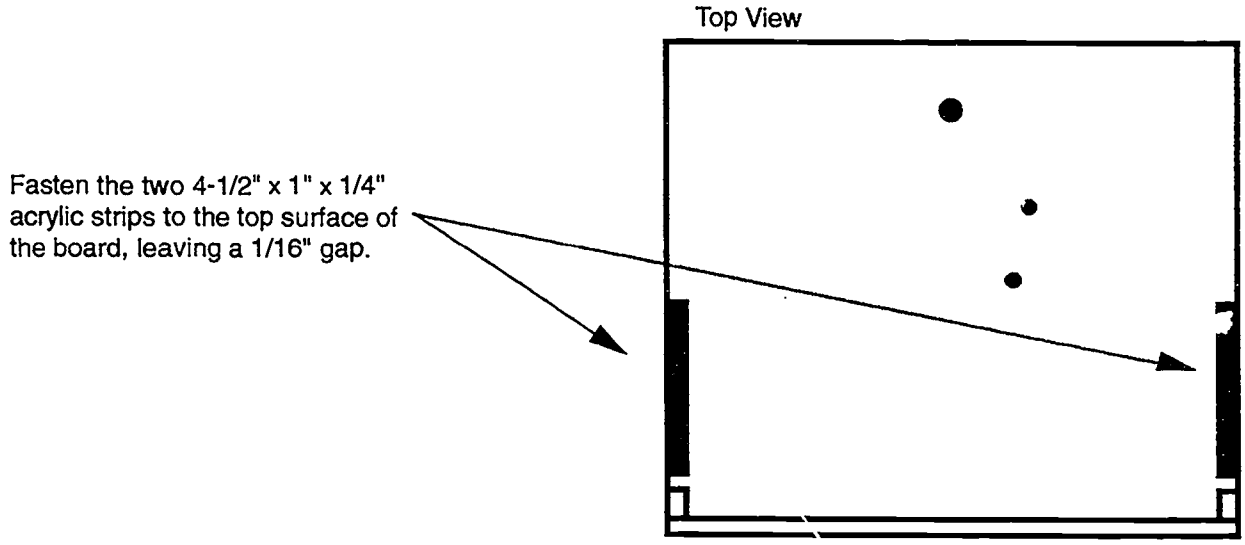

8. Place the undrilled 2 1/2" x 1/4" x 1" strip with its long narrow side on the top surface of the upper portion of the board. The upper edge of the strip should be 2 1/2" to the left of the upper right corner of the board. The lower edge of the strip should be 2 1/8" to the left of the right side of board. Fasten the strip to the board. This strip will serve as the chute for the ball bearings.

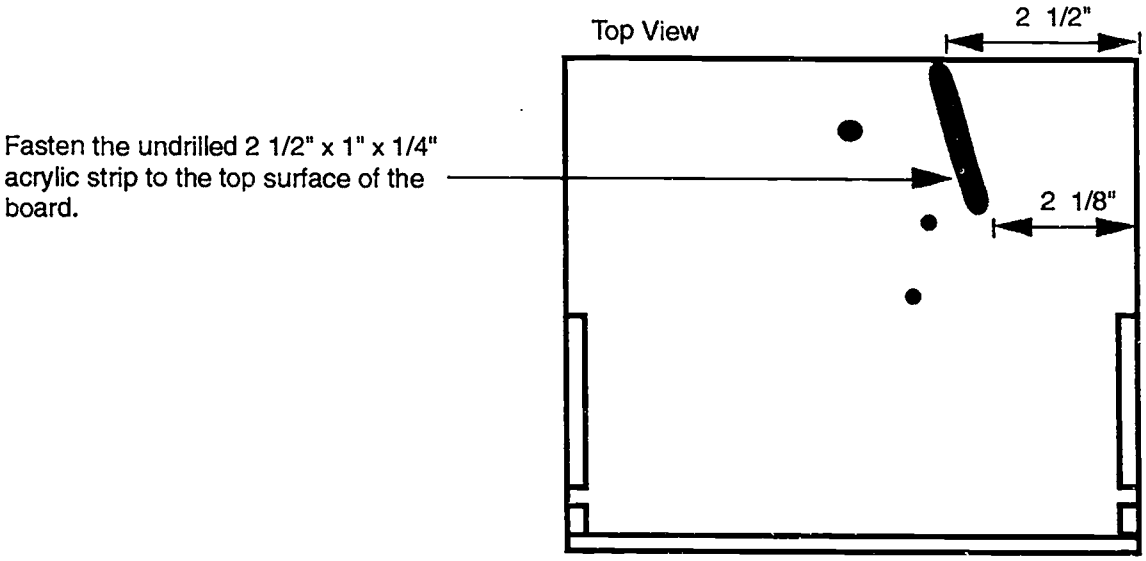

9. Remove the contact paper from the underside of the 9" x 8" board. Locate the 2 1/2" x 1" acrylic strip with the two drilled holes. Insert a 1"-long #8-32 brass bolt into each hole of the strip. Position the strip on the underside of the board, aligning the holes with the two 11/64" holes on the board. Push the bolts up through the board and place a brass washer onto each bolt. Place the brass nuts over the washers and twist them down only a couple of turns, leaving space for the magnet between the two plastic pieces.

Top View

Position the drilled 2-1/2" x 1" x 1/4" acrylic strip beneath the board and fasten with brass screws, washers and nuts, leaving some space between the plastic pieces for the magnet (see side view below).

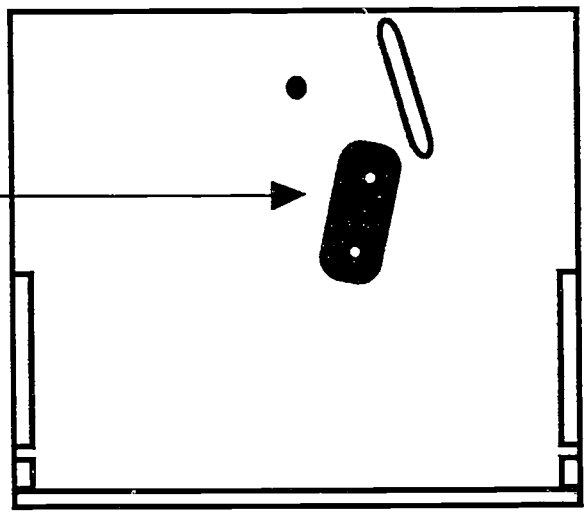

10. Place the alnico magnet between the board and the strip underneath the board. Tighten the nuts to hold the magnet firmly, but allow some motion to adjust its position slightly.

Top View

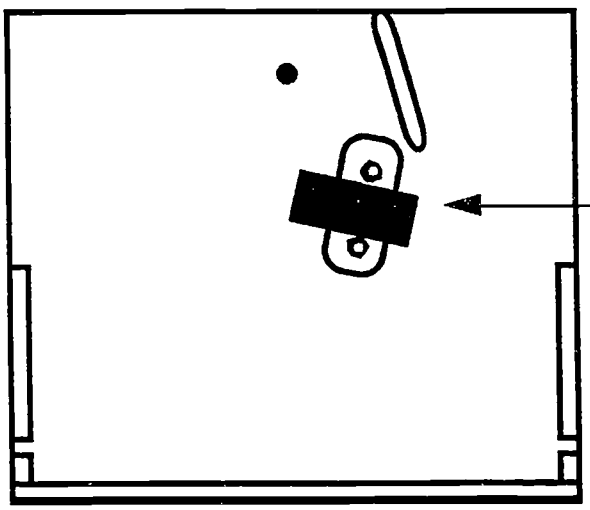

Clamp the alnico magnet underneath the board.

Side View

11. Position a washer onto the 5" threaded 1/4" rod. Screw a 1/4" steel nut onto the rod and push the rod down into the board. Position a second washer and nut on the rod underneath the 9" x 8" board. These nuts and washers will be used to adjust the slope of the board. Once you determine the approximate slope that you want, simply tighten the nuts to that position. Typically the slopes are set to about 20° from the horizontal. To protect a table top or the glass of an overhead projector from being scratched by the threaded rod, tighten an acorn nut on the bottom of the rod.

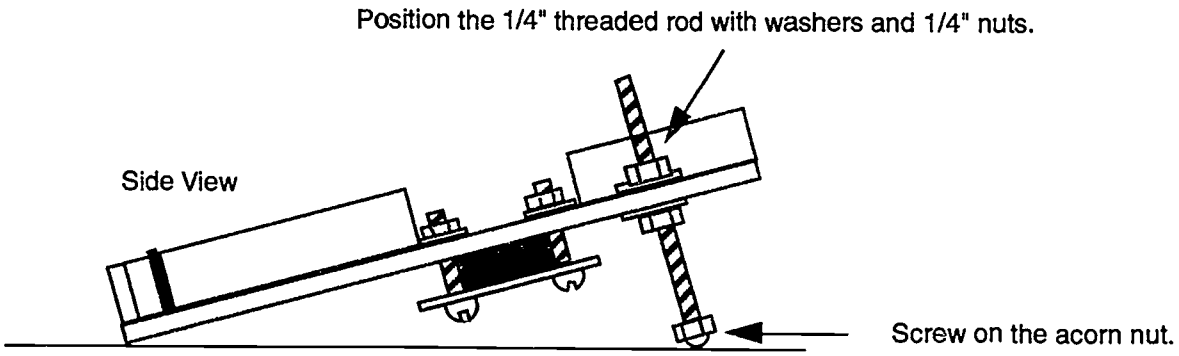

12. Insert the strip of masking tape through the 1/16" notches across the bottom of the demo board with the sticky side pointing towards the top of the board. Leave the tape loose, not taut. Roll the bubble plastic into a 8"-long cylinder and place this roll behind the tape to act as a cushion. This tape-and-bubble plastic assembly prevents the ball bearings from bouncing after they've been rolled down the chute. You may tell your class that this assembly simulates the "detector plate" of the mass spectrometer.

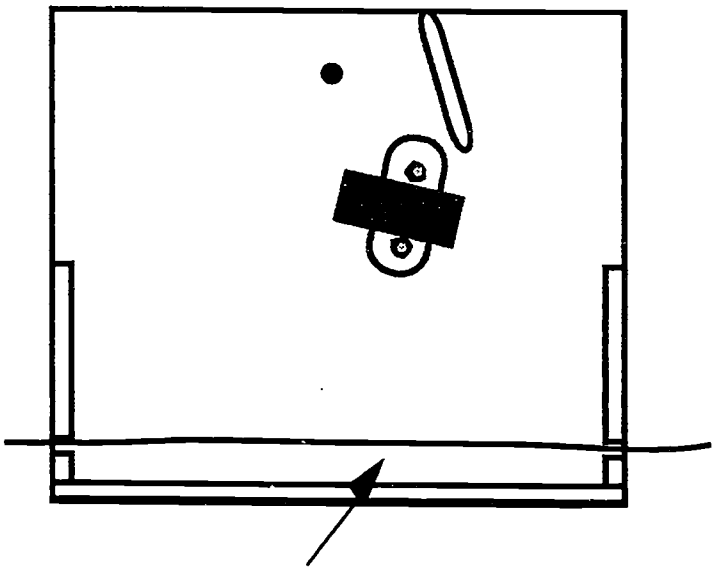

Insert a 14" strip of masking tape through the notches, leaving it somewhat loose. Then insert the roll of bubble plastic.

13. Both the slope of the board and the position of the magnet determine the trajectories of the ball bearings down the demo board. Each ball bearing should have its own trajectory, preferably landing as far away from the other bearings as possible. It is easiest to fine tune the trajectories by sliding and rotating the magnet, millimeter by millimeter, about its original position until optimal conditions are reached.

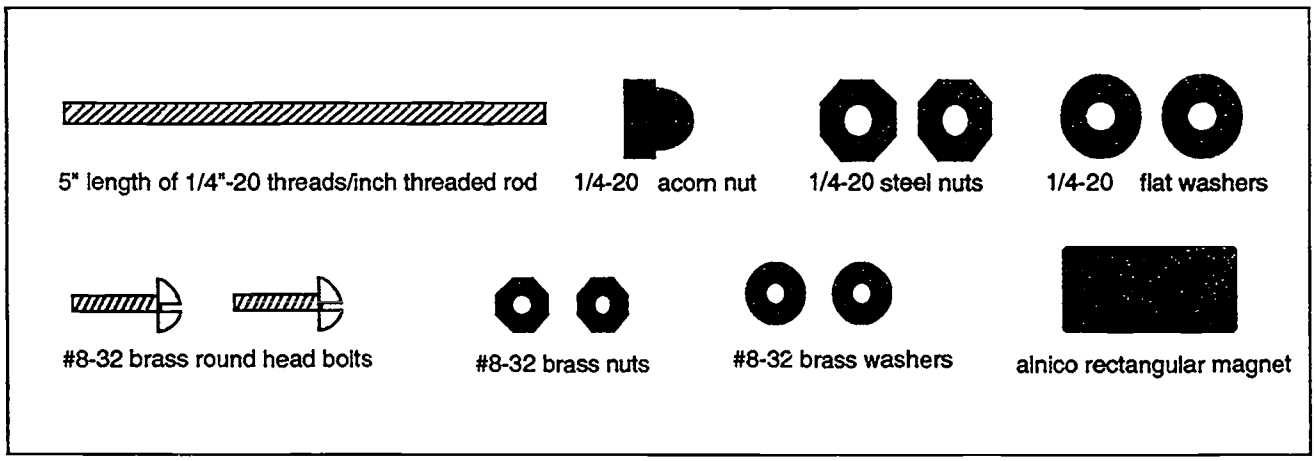

Hardware required for one mass spec demonstration board.

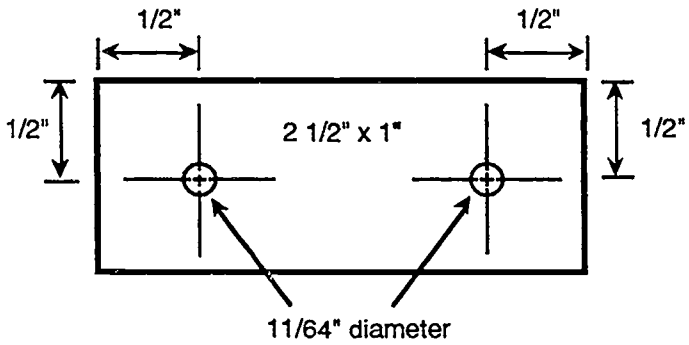

Template for drilling the 2-1/2" x 1" x 1/4" acrylic piece of the mass spec demonstration board (Scale: 1 inch = 1 inch)

Template for drilling the 9" x 8" acrylic piece of the mass spec demonstration board (Scale: 1 inch = 1 inch).

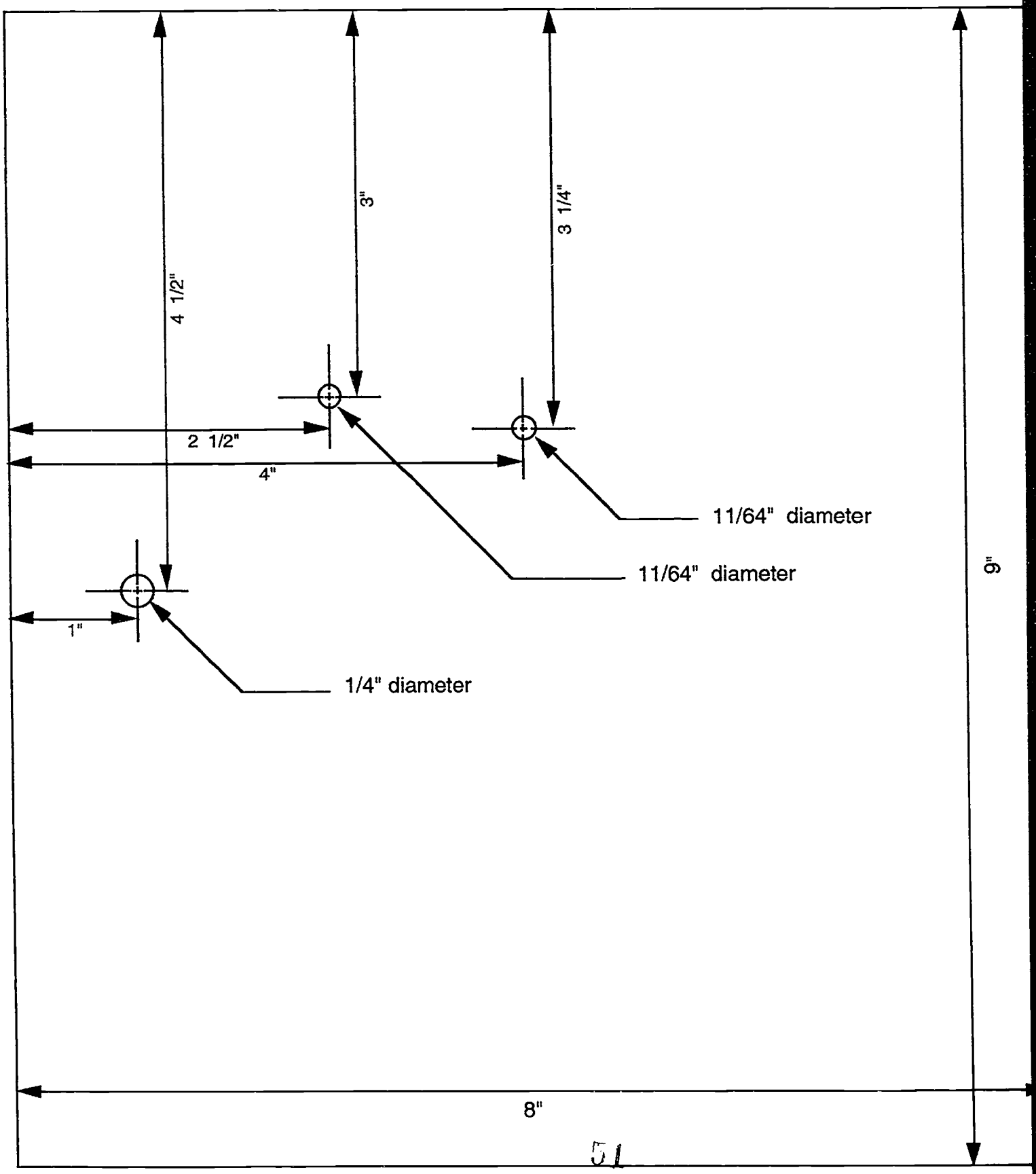

Mass Spectrometry

Mass spectrometry is an instrumental method used to identify molecular compounds.

The origins of the mass spectrometer date back to the turn of the century. In 1898, Wilhelm Wien discovered that beams of charged particles could be deflected by a magnetic field. A few years later, from 1907 to 1913, J. J. Thomson, the English physicist who also discovered the electron, experimented with positively charged particles. In his work, these charged particles, called ions, when passed through a combined electrostatic and magnetic field, were deflected onto a photographic plate. Thomson found that the angle of deflection was dependent on the particles' mass-to-charge ratio. Thomson replaced the photographic plate with a Faraday cup located behind a narrow slit cut in a sheet of metal. By varying the magnetic field, he was able to change the deflection angles of particles so that only those particles with a particular mass-to-charge ratio passed through the slit. Other particles hit the surrounding metal plate. Those particles passing through the slit hit the grounded metal cup. This induced a current in the cup that was measured by an ammeter. Because the particles were charged, it was easy to measure how many there were. Thus Thomson could be credited with the construction of the first mass spectrometer. Later, other scientists developed more sophisticated focusing techniques and improved the resolving power of the instrument.

The sketch below shows the main parts of a modern mass spectrometer. The sample is usually a liquid, which can be injected into the mass spectrometer through a syringe. Inside the mass spectrometer there is high vaccum, so the sample vaporizes. It then passes through an "ionization chamber" in which high currents of electrons bombard it, breaking it apart and removing electrons to leave behind positive cation fragments. These ionic fragments are guided by electrostatic lenses into an analyzer magnet where magnetic and electric fields cause the different fragments to travel along different paths, as the demonstration board shows. The mathematical expression for the motion of the ions of charge e and mass m through the electromagnetic field B of a mass spec is

$$1/r^2 = [B^2/2V] \times e/m$$

Thus, r is the radius of a circular path taken by the sample ions accelerated through the magnet by a voltage difference V. This radius is determined by the geometrical design of the instrument.

Usually in modern mass spectrometers, only particles traveling about a certain radius r are detected (that is, r is constant in the equation above). The magnetic field strength B is also held fixed. The user scans the voltage V and a map of the number of e/m ions detected at each voltage is plotted, or stored in a data file in a computer for later analysis.

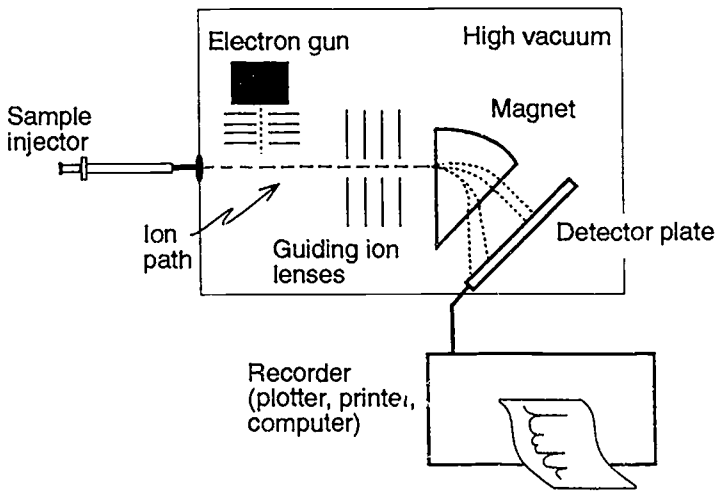

Templates for overhead projection

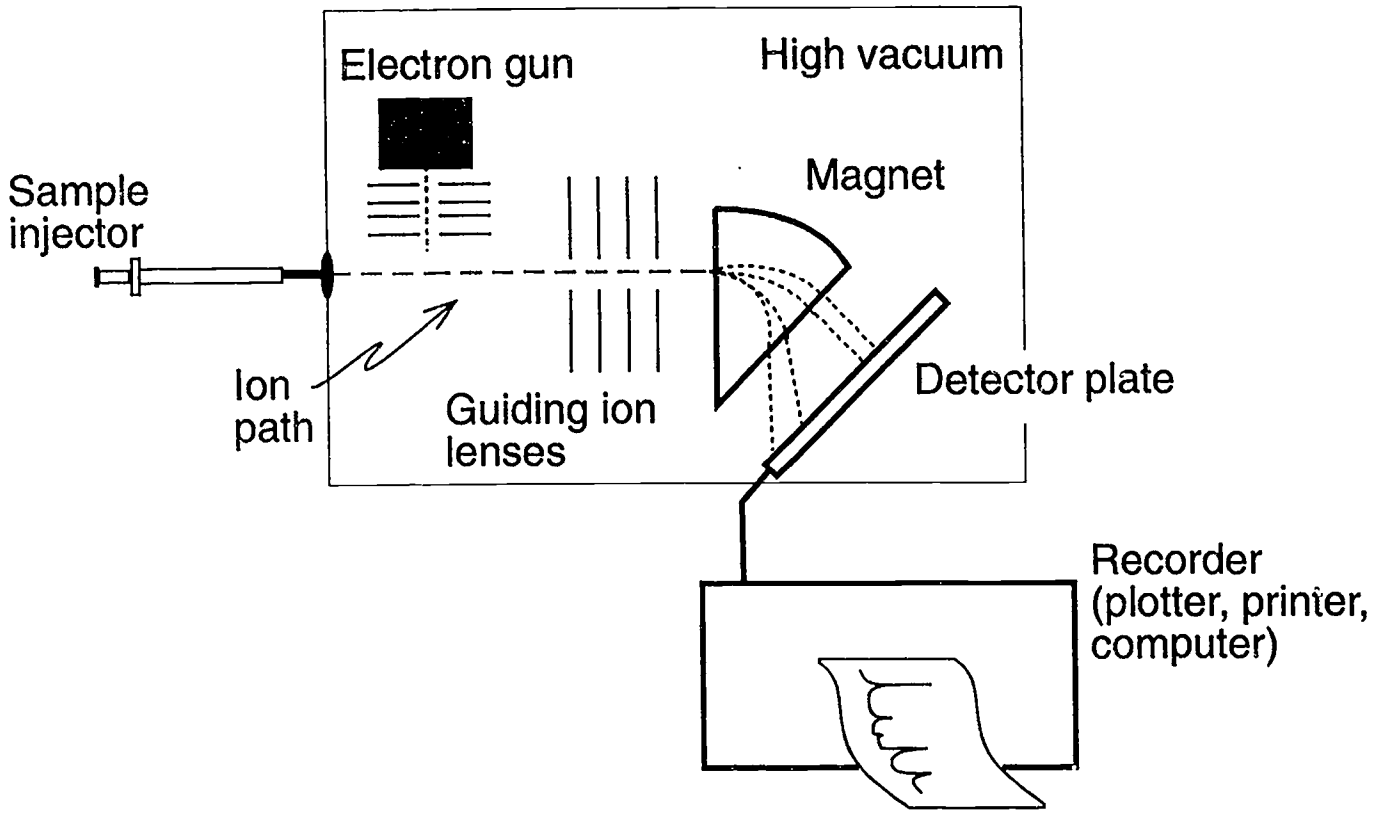

The main components of a magnetic mass spectrometer.

Chromatography Simulator

By Robert Shaner

The simulator is an easy and fun way to illustrate column chromatography, a technique used to separate components of a mixture. The column, like an earlier one [Habich, A.; Hausermann, *J. Chem. Educ.* **1986**, *63*, 715], is composed of ping pong balls in a clear acrylic tube. The mixture to be separated is composed of spheres of various sizes.

Materials

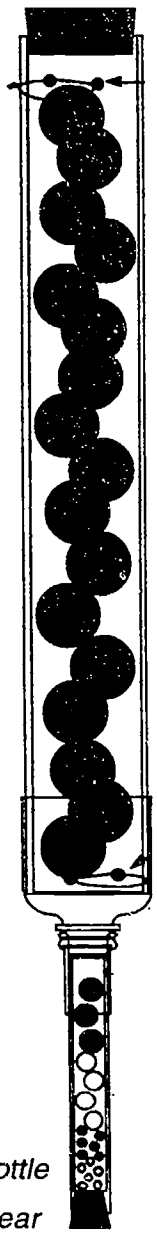

- ___ *#2 solid rubber stopper*
- ___ *60 cm (2 ft) of thin picture-framing wire*
- ___ *3 ea. 15-mm marbles*
- ___ *4 ea. 13-mm wood spheres (available at craft stores)*
- ___ *50 ea. 6-mm plastic spheres (available at craft stores)*
- ___ *50 ea. 6-mm metal spheres (BBs, available at hardware stores)*
- ___ *a drill and an 1/8" drill bit (for drilling acrylic)*
- ___ *a heat gun or hair dryer to shrink the plastic soda bottle*
- ___ *scissors*
- ___ *diagonal wire cutters*
- ___ *needle nose pliers*
- ___ *utility knife*
- ___ *rubbing alcohol and cotton balls*
- ___ *clear, carton-packaging tape*
- ___ *(optional) 3 cm (1 1/4 in) of 1" heat-shrink tubing*
- ___ *(optional) 5 cm (2 in) of 3" heat-shrink tubing*
- ___ *35 table tennis (ping-pong) balls*
- ___ *122 cm (4 ft) of clear acrylic tubing (available at plastics supply centers)**
  5.72-cm (2 1/4-in) I.D. (must be exact) *& 0.318-cm (1/8-in) wall*
- ___ *30 cm (1 ft) of clear acrylic tubing (available at plastics supply centers)**
  2.54-cm (1-in) O.D. & 0.318-cm (1/8-in) wall
- ___ *(optional) 5 cm (2 in) of clear, flexible plastic tubing*
  2.54-cm (1-in) I.D. & 0.318-cm (1/8-in) wall
- ___ *upper portion of either a 1-L (33.8-oz) or 20-oz, clear, colorless, plastic soda bottle*
- ___ *#12 solid rubber stopper or bottom portion of either a 1-L (33.8-oz) or 20-oz. clear plastic soda bottle*

* If unable to locate the tubing locally, check the *Yellow Pages* under "Plastics", or call Allied Plastics, Minneapolis, MN at 800-328-3113.

Preparation

1. Obtain either a 1-L (33.8-oz) or a 20-oz, clear, plastic soda bottle. Take off the label and clean both the inside and outside of the bottle. Remove the label adhesive with cotton balls soaked with rubbing alcohol.
2. Using a utility knife, cut away the bottom half of a 1-L bottle or the bottom quarter of a 20-oz bottle (see Figure 1).

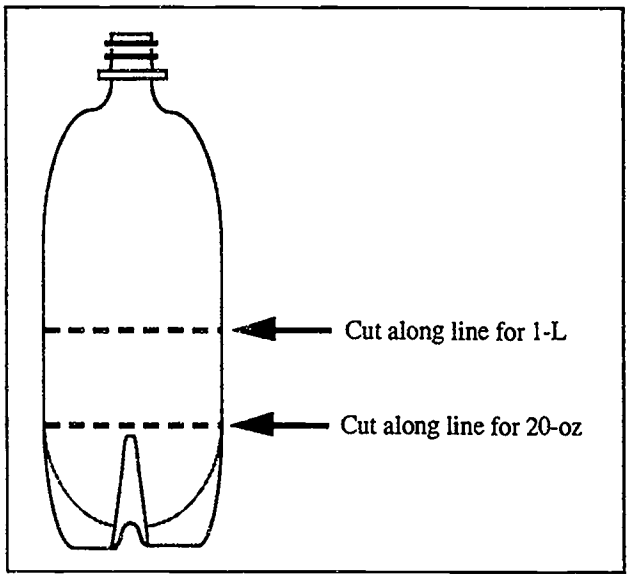

Fig. 1. Cutting the plastic soda bottle.

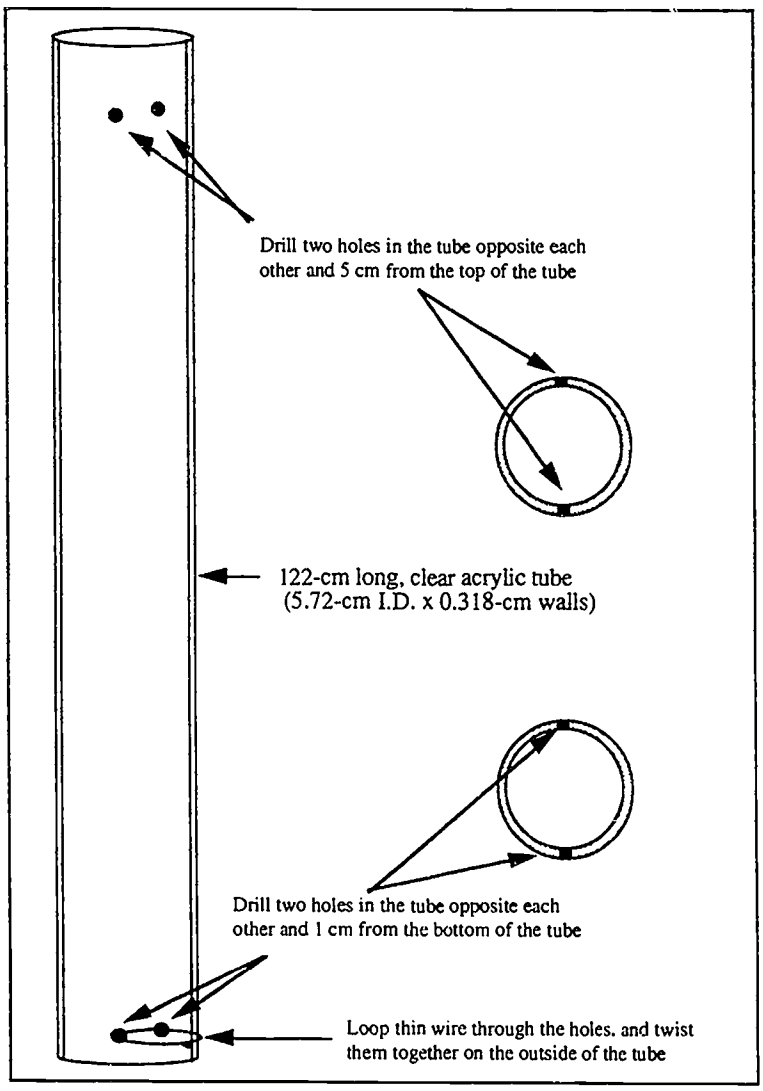

Fig. 2. Drilling holes and inserting a wire loop into the larger acrylic tube.

3. Drill two holes 5 cm (2 in) from the top of the larger acrylic tube on opposite sides of the tube. Use a 1/8" drill bit (See Figure 2).
4. Drill two holes 1 cm (1/2 in) from the bottom of the tube on opposite sides of the tube. Use a 1/8" drill bit (see Figure 2).
5. Cut 30 cm (1 ft) of thin wire and loop it through the two holes at the bottom of the acrylic tube. Twist the ends together on the outside of the tube to hold the wire in place. Trim off excess wire using the wire cutters.

6. Push the soda bottle over the acrylic tube until the neck of the bottle fits snugly against the bottom rim (see Figure 3).
7. Using a heat gun (set between 400 and 600°F) or a hair dryer, shrink the soda bottle around the acrylic tube. Try not to heat the neck of the soda bottle. If using the heat gun, be careful not to overheat the acrylic tube, causing it to melt.

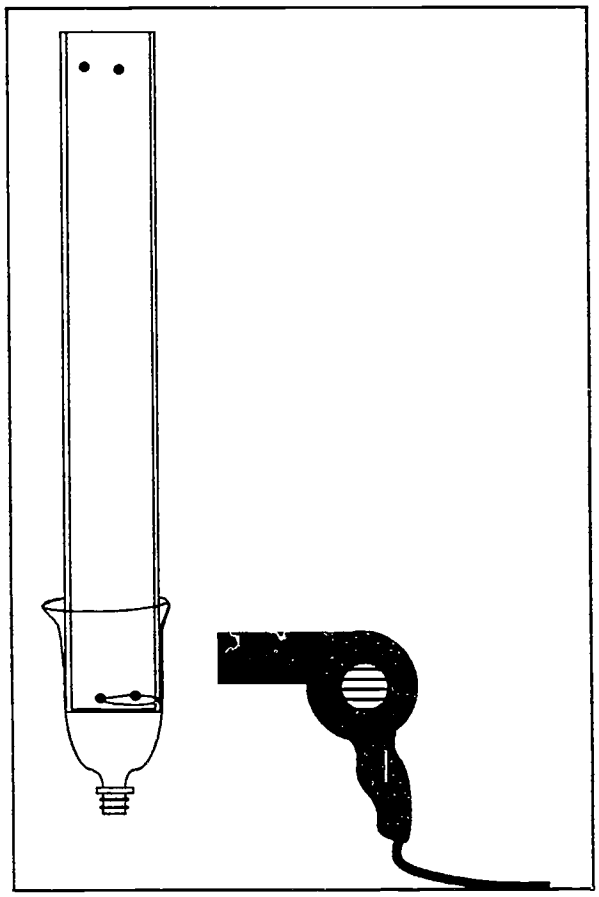

Fig. 3. Shrinking the upper portion of the plastic bottle around the bottom of the large acrylic tube using a hair dryer.

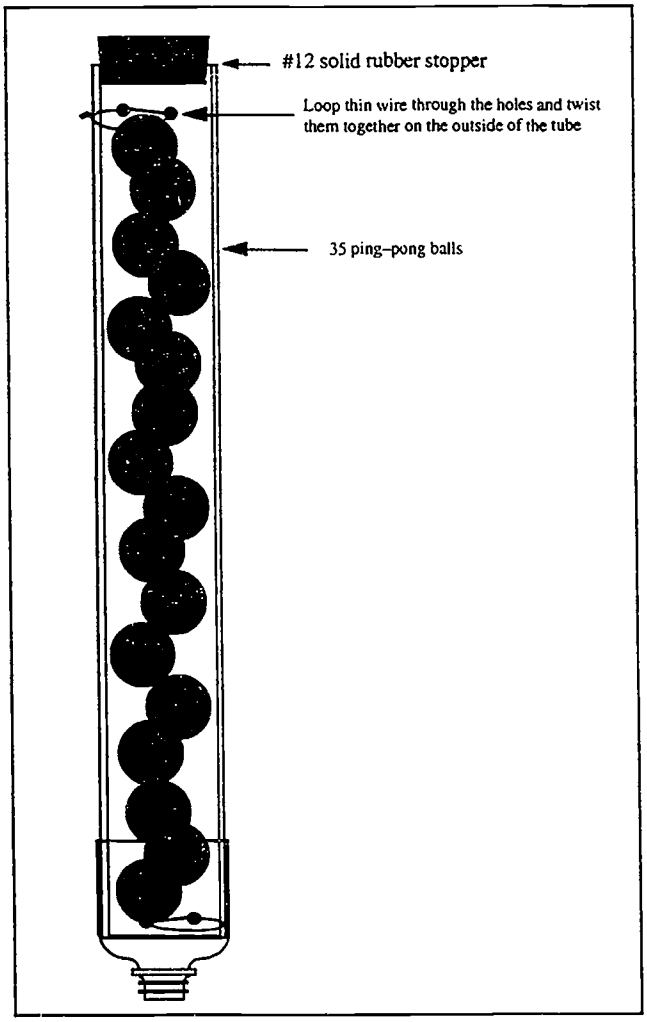

Fig. 4. Inserting ping-pong balls into the acrylic tube.

8. Insert about 35 ping-pong balls into the large acrylic tube. The exact number of balls is determined by making sure that the top of the highest ball is about 1.5–2.5 cm (1/2–1 in) below the drilled holes.
9. Cut 30 cm (1 ft) of thin wire and loop it through the two holes at the top of the acrylic tube. Twist the ends together on the outside of the tube to hold the wire in place. Trim excess wire using wire cutters.

10. Insert a #12 solid rubber stopper into the top of the acrylic tube. Alternatively, use the heat gun to shrink the bottom half of a soda bottle over the end.
11. Obtain a 5-cm (2-in) long piece of clear, flexible-plastic tubing [2.54-cm (1-in) I.D.], **or** cut clear, carton-packaging tape into six 2.5 x 15-cm (1 x 6-in) strips.
12. a. *If using plastic tubing:* Slide 3 cm of it over the end of the small acrylic tube. Slide the rest of the Tygon® tubing over the top of the soda bottle. Try to get a snug fit.

    b. *If using clear tape-strips:* Wrap them diagonally around the tube and the top of the soda bottle so that a crisscrossing pattern develops. The connection should be fairly rigid; if necessary, use extra tape to achieve this (see Figure 5).
13. You may need to use some clear carton tape to keep the plastic bottle from slipping away from the acrylic tubes.

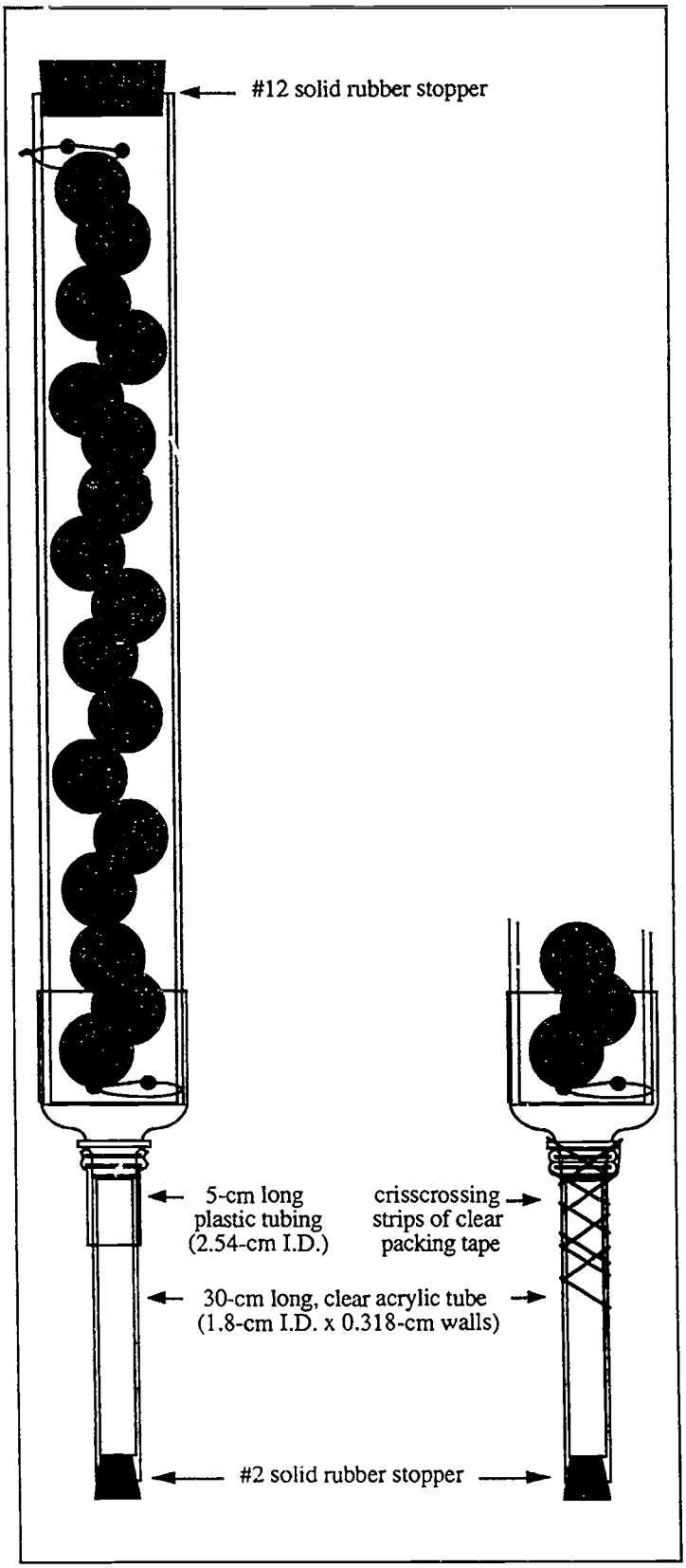

Fig. 5. Connecting the smaller acrylic tube to the bottle top.

14. Insert the following spheres into the small tube: three 15-mm glass marbles, four 13-mm wood spheres, fifty 6-mm plastic spheres, and fifty 6-mm metal spheres. Insert the #2 solid rubber stopper into the bottom of the small tube.
15. You may wish to slide heat-shrink tubing over the two rubber stoppers and heat them with a heat gun or hair dryer. This will hold the stoppers in place.

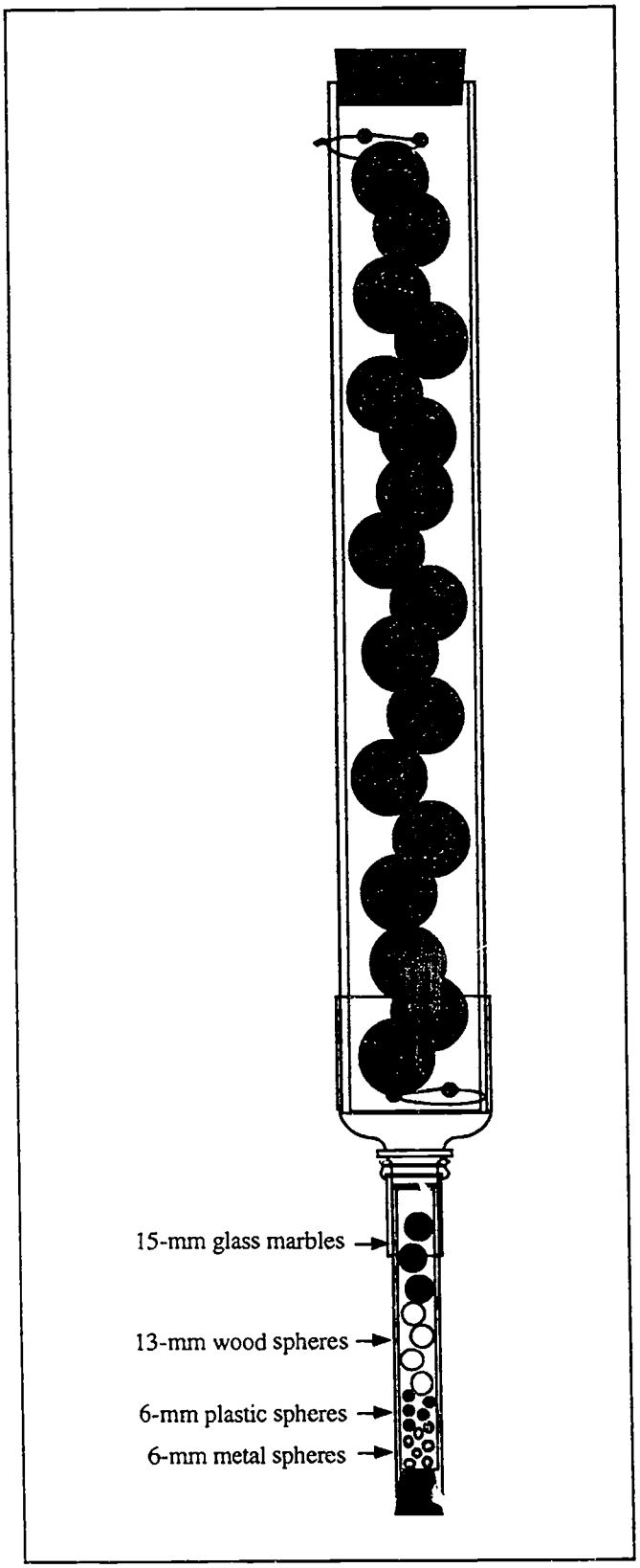

Fig. 6. Inserting the various spheres and sealing the tube.

Presentation

1. Flip the column so that all the spheres rest on the large stopper.
2. Quickly turn the column over and watch the spheres roll down through it.

   The four types of spheres travel down at different rates due to their differing sizes and densities reacting to the column.
3. The demonstration may be repeated by just flipping the column again.

What is Chromatography

Column chromatography involves two phases: a mobile phase, which is the mixture to be separated, and a stationary phase. The mobile phase passes through the stationary phase, resulting in a separation of the mixture into its parts. The separation occurs because mobile components are attracted to the stationary phase to different degrees. Components that are strongly attracted are detained by the column, and thus pass through more slowly than do components that are less attracted.

Rod-climbing liquid

by Ron Perkins

This apparatus shows the chain-like structure of polymers. If used in combination with a setup of a rotating rod (e.g., the handle of a wooden spoon) in a bowl of water and a second rotating rod in a bowl of cooked spaghetti, students will clearly see that the polymer behaves more like the spaghetti than the water—it climbs up the rod. You may provoke discussion by asking what other substances your students might have seen climbing rods (bread or cake dough gunking up the shaft of a beater; long hair twisting up a nervous person's finger).

These instructions consist of two sections: making the sturdy stirring device and mixing up the polymer solution to use with it. The latter requires several days of stirring, with occasional adjustments of the stirrer speed. Stored in a clean, covered container, this solution should keep indefinitely.

Materials

(Note: "3/4" PVC tubing" is 7/8" O.D. and 11/16" I.D.; "1/2" PVC tubing" is 5/8" O.D. and 7/16" I.D.)

- ___ *6' PVC tubing, 3/4"-dia.*
- ___ *2.5" piece PVC tubing, 1/2"-dia.*
- ___ *PVC female fittings, 3/4"*
  - ___ *2 tees*
  - ___ *3 elbows*
  - ___ *2 end caps*
- ___ *PVC male/female fittings, 3/4"*
  - ___ *1 elbow*
  - ___ *2 reducers (3/4"-dia. tubing to 1/2"-dia. tubing)*
- ___ *can of PVC solvent*
- ___ *small paint brush*
- ___ *16" x 1" x 12" piece of wood*
- ___ *2 ea. 2" x 4" x 10" pieces of wood*
- ___ *5"-dia. disk of rigid plastic (e.g., plastic plate or saucer, cut to size) or clear acrylic disk†*
- ___ *190 mm dia. (minimum at bottom) 100 mm deep (minimum) transparent bowl or crystallizing dish (colorless is best)**

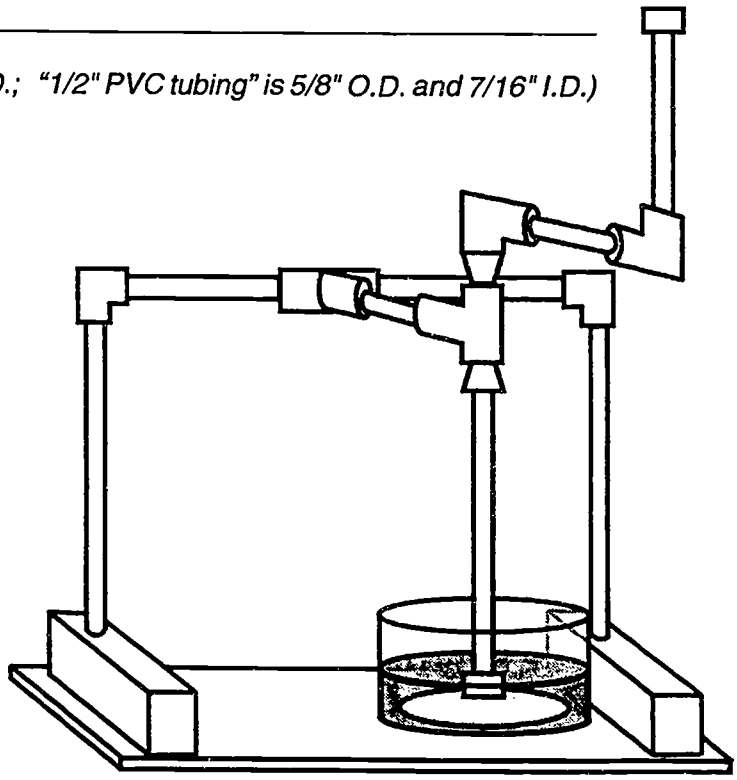

† Several plastic plates can be glued together to make a disk of rigid plastic.

* A Rubbermaid® salad crisper is an excellent alternative to the crystallizing dish. It is the right size, and with its lid snapped on can be used to store the polymer solution indefinitely.

- ___ *2" (or longer) screw, any diameter*
- ___ *2 ea. hex nuts to fit the screw*
- ___ *metal washer to fit the screw*
- ___ *rubber washer to fit the screw*
- ___ *epoxy*
- ___ *4 ea. 2"-long nails*
- ___ *hammer*
- ___ *drill and 7/8"-dia. drill bit and drill bit to fit the screw*
- ___ *screwdriver to fit the screw*
- ___ *saw*
- ___ *balance*
- ___ *clean containers with caps to store 3 L of liquid (see footnote * previous page)*
- ___ *75 g polyethylene oxide (ave. FW = 7 x 10^6) Aldrich Cat. No. 37,281-1; $36.60 for 250g [Aldrich Chemical Company, Inc. 800/558-9160 or 414/273-3850]*
- ___ *300 mL ethanol*
- ___ *1.5 ml (30 drops) 2% thymol in ethanol (used as preservative) Aldrich Cat. No. 11,209-7 $4.75 for 5 g of the dry thymol crystals*
- ___ *food coloring*
- ___ *3.0 L distilled water*
- ___ *4 L beaker*
- ___ *400 mL beaker*
- ___ *glass stirring rod*
- ___ *variable speed, mechanical (not magnetic) stirrer with 4"-diameter paddles* (borrow a mechanical paddle stirrer from an organic chemist at a local college, or rent a paint stirrer that fits an electric drill from a hardware store)
- ___ *plastic funnel to fit over the shaft of the mechanical stirrer*

Procedure

Building the stirrer

1. In the two wooden pieces, drill 7/8"-dia. holes centered 2" from the end of the 2" side of the block.
2. Cut the 3/4"-dia. PVC tubing to the following lengths:

___ *2 pieces at 17.5"*	___ *1 piece at 15.5"*
___ *2 pieces at 5"*	___ *1 piece at 2.5"*
___ *1 piece at 1.25"*	___ *1 piece at 6"*

3. Drill or punch a hole in the 5"-dia. plastic disk to fit the screw. Drill or punch a hole in one of the end caps to fit the screw.
4. Attach the plastic disk to a PVC end cap: Insert the screw through the hole. Put on the metal washer, the end cap, the rubber washer, and both hex nuts. Tighten the screw down and epoxy the outer hex nut to the screw so that it is permanently attached.

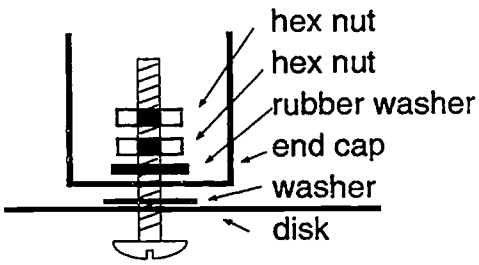

5. Assemble the tubing into the stirrer support and stirrer assemblies according to the diagrams below. Apply PVC solvent with the paint brush to the tubing at the joints, *except* where indicated. Note that the 1/2"-dia. tube is inserted into the tee of the stirrer, and held in place with reducers. This is the rotating piece of the stirrer.

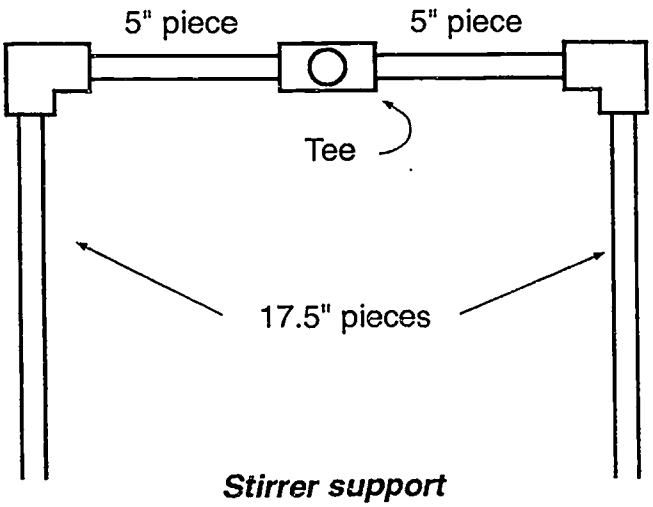

Stirrer support

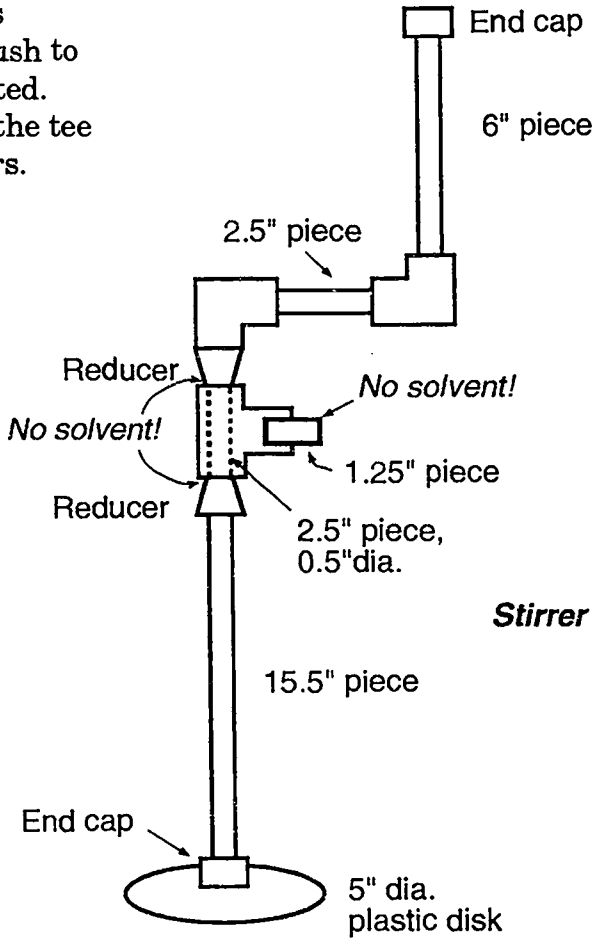

Stirrer

Wood stand

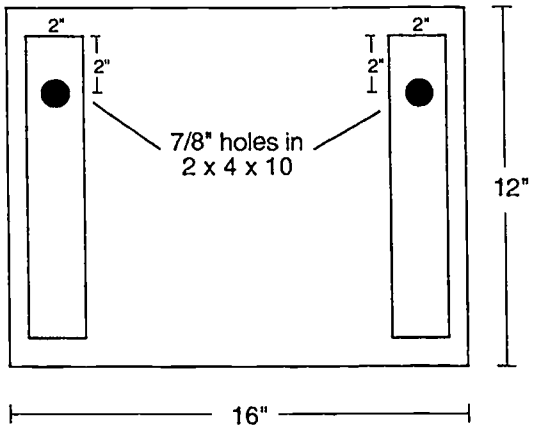

6. Place the wood blocks onto the large wood board as indicated at right. Insert the legs of the PVC support into the holes in the blocks and adjust their position on the board accordingly. Epoxy the blocks to the board. When the epoxy is dry, remove the PVC support, turn over the wood assembly and attach the blocks more firmly to the board with the nails.

*Preparing the 2.5% polyox solution**

1. Prepare a solution of 2% thymol in ethanol by dissolving 0.5 g thymol in 24.5 g ethanol (about 30 mL).
2. Invert the funnel over the rod of the stirrer. This will prevent the polymer solution from climbing up the stirrer. Use tape to secure the funnel to the rod.
3. Pour 3.0 L of distilled water into a 4 L beaker and adjust a mechanical stirrer so that the stirring paddle is just above the bottom of the beaker.
4. Add 30 drops of 2% thymol in ethanol and any desired food coloring.
5. Place 75 g of polyethylene oxide into a 400 mL beaker and add enough ethanol to make a slurry, about 200 mL.
6. Adjust the stirrer speed to give a deep vortex in the large beaker and, while stirring the slurry, *quickly* pour it into the vortex.
7. Slow the speed of the mechanical stirrer to a crawl (say, 60 rpm) and readjust so that the paddle is just below the top surface of the solution. Adjust the angle of the stirrer to be 3 to 5° off the vertical. If the stirrer is set to move faster than a crawl, bubbles may develop in the polymer solution that will not disappear and that will make the solution opaque.
8. Stir for two days or longer.
9. Upon standing for a few hours, some undissolved polymer may float to the surface. Either continue the gentle stirring for a few more days or scoop off the undissolved polymer and gently stir the remaining solution a few hours longer.
10. Pour the polymer solution into the bowl or crystallizing dish and set onto the wooden stand.
11. Insert the tube of the stirrer assembly into the tee of the stirrer support. (Do *not* use PVC solvent for this joint!) Insert the support into the holes of the wooden stand and adjust the position of the bowl or crystallizing dish so that the plastic disk is centered in the polymer solution.

Presentation

1. Holding the stem and handle of the apparatus, rotate the rod. Observe the polymer creep up.

---

* Solution preparation procedure suggested by members of the research group of Professor John L. Schrag, Dept. of Chemistry, University of Wisconsin, Madison, WI 53706.

Electrolysis Apparatus

By William Fausey

This devICE allows one to easily set up an electrolysis demonstration on an overhead projector. While the actual chemistry might be too complicated for younger students, the phenomenon of electrolysis and conductivity of water could be shared with children of all ages. The evolution of gas bubbles and the different colors of an indicator produced at the anode and cathode are a fascinating sight.

The electrolysis of a KI solution has been written up by Ken and Doris Kolb [*J. Chem. Educ.* **1986**, *63*, 517]. Immediately upon immersion of the electrodes, there is a copious flow of hydrogen gas bubbles at the cathode and within a few seconds a yellow-brown iodine coloration at the anode. After 30–60 seconds a drop of phenolphthalein placed near the cathode turns that area of the solution bright pink. A squirt of 1% starch solution near the anode gives that area the blue-black color of the starch-iodine complex.

Electrolysis of $NaNO_3$ using various indicators was described by J. Skinner [*J. Chem. Educ.* **1981**, *58* , 1017]. Any dilute aqueous solution, e.g., simple tap water, can be electrolyzed in this way. The anode and cathode can be identified by adding a few drops of red cabbage juice indicator near each electrode.

The instructions here call for construction from a wooden block. It has been suggested that this device can also be made from a styrofoam block, such as used by florists to hold flower arrangements. However, in that case the apparatus may not stand up on its own, but will have to be held in your hand.

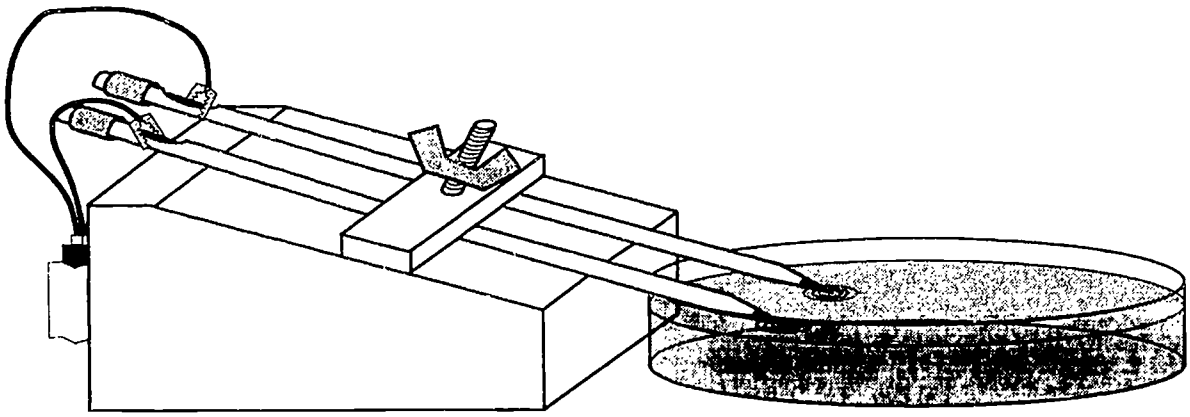

Materials

- ___ *2 x 4 wood block (6 cm x 3.5 cm x 8.5 cm)*
- ___ *2 cm x 0.5 cm x 8.5 cm wood strip, e.g., a tongue depressor or a cut paint stirrer*
- ___ *saw*
- ___ *hammer and small nail or awl*
- ___ *vise or c-clamps and work table*
- ___ *drill*
- ___ *9/16"-dia., 1/2"-dia. and 1/4"-dia. drill bits*
- ___ *1/4"-dia. 2"-long machine bolt*
- ___ *wing nut for 1/4"-dia. bolt*
- ___ *#5 or #6 self-starting screw, 1/2 to 3/8" long*
- ___ *9V battery*
- ___ *9V battery holder (Radio Shack #270-326A)*
- ___ *9V battery clip (Radio Shack #270-325)*
- ___ *2 ea. alligator clips (Radio Shack #270-375C)*
- ___ *pliers*
- ___ *2 ea. sharpened pencils*
- ___ *petri dish [Flinn Scientific AP8170]*
- ___ *red cabbage juice*
- ___ *1 cup distilled water*
- ___ *blender*
- ___ *sieve*
- ___ *2-cup mixing bowl or beaker*

Procedure

Preparing the electrode holder

1. Drill a 1/4" hole in the center of the wood strip (Figure 1). This strip will serve as the electrode (pencil) holder.

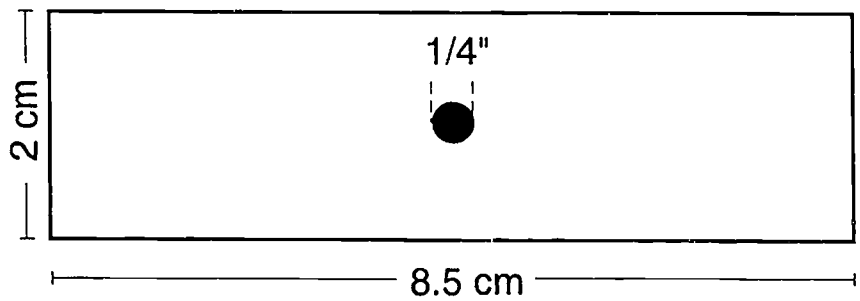

Figure 1. Drilling the wood strip.

2. Start a small hole using a nail or awl in the center of the 3.5 cm x 8.5 cm surface of the wood block (Figure 2).

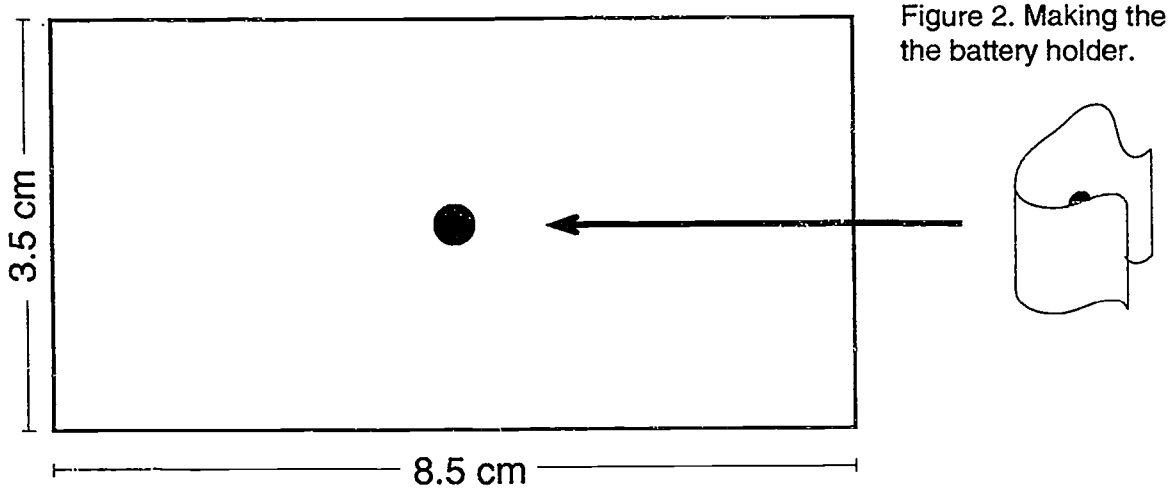

Figure 2. Making the hole for the battery holder.

3. Cut a wedge from the top of the wood block as shown in Figure 3.
4. Drill a 1/2" hole perpendicular to the sloped surface all the way through the block. Countersink the hole (that is, drill the hole out from the other side) about half way using a 9/16" drill bit.

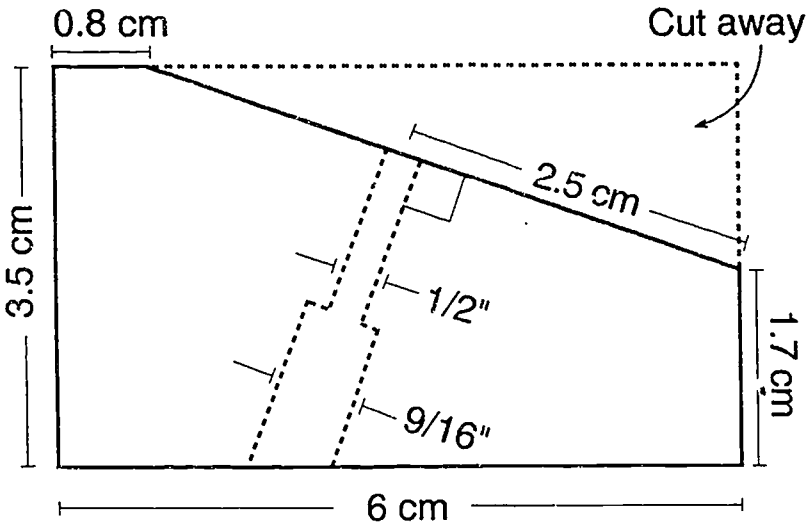

Figure 3. Cutting and drilling the wood block.

5. Attach the battery holder to the wood block, fixing it in place with the #5 or #6 self-starting screw (Figure 2).

6. Near the eraser end of each of the pencils, remove enough wood to expose the lead.
7. Insert the 1/4" machine bolt from the bottom of the block. Place the pencils on the slanted surface with their sharpened ends pointing down. Insert the machine bolt into the hole of the wood strip, thread on the wing nut and tighten it down so that the pencils do not budge. The pencils should be fairly parallel to each other and about 3 cm apart.
8. Using the pliers, crimp the alligator clips to the wires on the battery clip.
9. Clamp the battery in the battery holder and attach the battery clip. Attach the alligator clips to the exposed pencil leads.

Making Cabbage Juice

1. Coarsely chop the red cabbage.
2. Place the cabbage into a blender or food processor. Add about 250 mL (1 cup) of distilled water and blend the mixture until the cabbage has been pulverized.
3. Pour the mixture through a sieve held over a container to catch the liquid. This strained liquid is the cabbage juice indicator. (Note: Cabbage juice will spoil and become very smelly if left unrefrigerated.)

Presentation

1. Place the petri dish with the solution that you will be electrolyzing on the overhead projector.
2. Place the electrode apparatus next to the petri dish so that the pencil leads are in the solution. Observe the electrolysis.
3. Place several drops of the red cabbage juice indicator into the solution near the electrodes.
4. Observe what happens near each electrode. Determine which electrode is the cathode and which one is the anode.

The actual reactions at the electrodes are

(cathode) $4\,H_2O + 4\,e^- \longrightarrow 4\,OH^- + 2\,H_2$

(anode) $6\,H_2O \longrightarrow O_2 + 4\,H_3O^+ + 4\,e^-$

Appendix: Soldering

Text by Carl Houtman, Illustrations by Christine L. Cargille

A note of caution

The soldering iron tip is extremely hot. Soldering is inherently a three-hand job: you need to hold the soldering tool and both pieces to be joined. However, it is best to use a vise or a clamp for the third hand, rather than a human assistant.

The equipment

Soldering is a way to join two metal surfaces. For the "glue", one uses a low-melting-point alloy. For electronic or electrical work an alloy that is 40% tin and 60% lead is best, in contrast to the 50/50 solder that is used for plumbing connections. **Electronic solder** often has a rosin core to act as a flux to improve the "wetting", or coating, of the metal surfaces to be joined.

To clean and re-tin the soldering iron tip, use **tip cleaning paste** for electronic work from an electronics store. Do not use acid cleaners or acid flux—they will corrode your work. You can also gently **sand** the surface of the soldering iron tip until you have exposed the base metal.

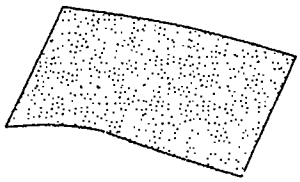

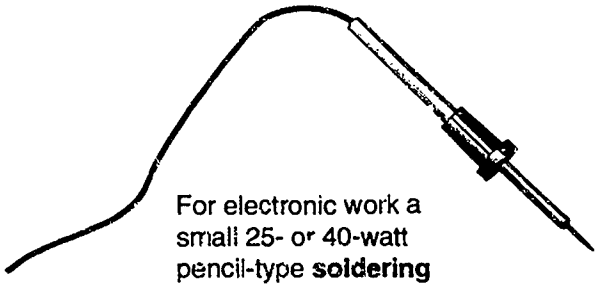

For electronic work a small 25- or 40-watt pencil-type **soldering iron** is used. The large gun-type irons do not have a fine enough tip.

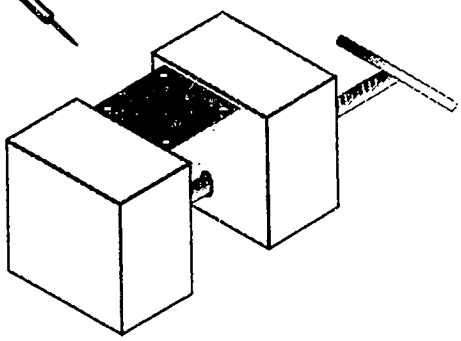

It will infinitely simplify your task if you have a **vise** or a **C-clamp** to hold one of the parts that you will be soldering—either the printed circuit (PC) board, if you are soldering components to such, or one of the wires, if you are soldering to a wire.

You will need **tweezers or pliers** or some other tools to hold small, very hot, delicate objects.

Finally, you may need to protect certain components from overheating during the soldering process. Small **alligator clips** can be clamped between the component and the joint to be soldered to act as heat sinks.

Soldering procedure

1. **Clear away a work space** on a flameproof surface. **Put on safety goggles** to protect your eyes from hot rosin which might spatter.
2. **Take a sponge, or fold a paper towel** into quarters or eighths and **wet it**; place it next to the soldering iron pencil.
3. Plug in the soldering pencil and allow it a few minutes to get hot. **Check the tip:** Touch the tip of the soldering pencil to some solder. It should melt and coat the tip. If the solder rolls off the tip and does not coat it at all, you may need to clean the tip as described above. Then the solder will wet the tip surface.

   While soldering, **wiping the tip** on the damp paper towel (or sponge) will help clean it by removing the oxide that forms on the surface of molten solder. Wiping on a damp towel also keeps the tip from overheating and oxidizing. To wipe the tip, simply stroke it over the folded paper towel that is lying on the table. Do NOT take the towel and rub it over the tip! You will severely burn your fingers.
4. The most important step in obtaining good solder joints is to **clean all the surfaces** carefully. Solder does not wet oxidized surfaces. When working on a printed-circuit board, rub the metal surfaces with fine steel wool. Other electronic components typically have non-oxidizing wires that don't need cleaning. Copper wires may need to be stripped to expose fresh metal. For help in wire stripping, see the relevant section below.

The next few steps will describe how to solder a wire lead of an electronics component to a printed-circuit (PC) board and how to solder a wire to a post or to another wire. An important point to remember when soldering *any* joint is that it is not enough to melt the solder and drip it all over the joint as one might do with glue. The pieces to be joined must be at the same temperature as the molten solder in order for the bond to be strong. Thus, *the soldering iron is used to heat the pieces to be joined, which in turn transfer heat to the solder.*

A. How to solder wire leads to a PC board

5. **Insert the wire leads** of the electronics component into the appropriate sockets of the PC board.
6. **Secure the board** in a vise or clamp.
7. If necessary, **clamp an alligator clip** between the joint and the (heat-sensitive) electronics component to minimize the heat transferred up the wire lead.
8. A *small* amount of solder should be on the tip of the soldering pencil to aid the flow of heat to the surfaces. Hold the soldering pencil in one hand and the solder in the other. Touch the hot tip of the soldering pencil to one side of the wire lead and to the soldering trace on the board. When the surfaces are hot (after about 30 seconds or so), touch the solder (not the pencil) to the other side of the wire lead. Do not let the solder touch the soldering pencil directly.

After about 25 seconds, the heat from the soldering pencil should penetrate through the wire lead and melt the solder. The solder will flow onto the wire and onto the copper trace. The solder only flows onto hot surfaces.

9. Do not use too much solder or it will overflow onto adjacent leads or traces, creating a "solder bridge". If you make a solder bridge, first rub off any excess solder from the pencil tip on a damp paper towel. Reheat the joint to melt and remove the bridge. If this does not work, heat the joint until *all* the solder is molten and then tap the board on the table. If the solder is molten you should be able to shake it from the board.

B. How to solder wire leads to wire

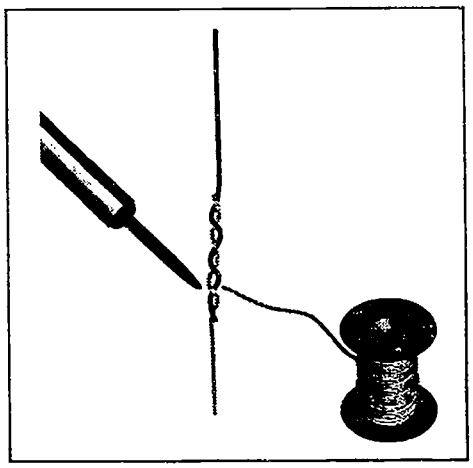

10. **Make a firm mechanical connection** by twisting or crimping the wires together. If you do not make a good mechanical connection, you may make a "cold solder joint". Cold solder joints form when the wires are moved as the solder is cooling. One can spot cold solder joints because they often have a rough surface while good joints have a smooth surface. Simply reheating a cold solder joint will correct the problem.

C. How to solder wire leads to multistrand wire

11. **Strip** an 1–1.5" of insulation from the multistrand wire. Twist the strands so that they spiral together. "**Pre-tin**" the strands: Hold the soldering pencil tip to one side of the wire and the solder to the other side. When the wire is hot enough, the solder will melt and penetrate among the strands. Allow to cool.

Wire Stripping

"Stripping" a wire refers to removing the insulation casing and exposing the copper wire. The easiest way to strip wire is to use wire strippers. These are designed to cut the insulation but leave the metal wire intact—they are like scissors with a small notch in the cutting edge. Care is required, however, since many wires are bigger than the notch.

Place the wire in the jaws of the stripper at the position where you want to remove the casing. Squeeze the stripper carefully. [If you are uncertain about how hard you need to close down the stripper, practice by trying to remove a very short piece (1 cm) of insulation.] You may want to rotate the stripper around the whole wire to get an even cut all the way around the insulation.

Once the insulation is cut, shove the stripper along the wire towards the end to push the casing off the bare wire inside. This is like taking off a sock by pushing it down from the top instead of pulling it by the toe.

Appendix: Other Device Sources

Many science equipment suppliers also provide kits or instructions for very inexpensive but versatile classroom activities using their products. Below is a brief list. We include only samples of the offerings. The prices are either the prices of the products or the estimated cost of building the devices using the vendor's instructions. Please let ICE know of other companies or institutions that provide these kinds of tools.

Light sticks, "Liquid Light Demo Kit" ($12) and other products
Educational Innovations
151 River Road
Cos Cob, CT 06807
203/629-6049

E. I. provides kits for ICE devICEs such as pre-cut and drilled plastic and wood; hardware; and electrical components.

3-wavelength colorimeters to replace a Spec 20 ($10)
Instructions for other projects can be found in *The Caliper* newsletter
Vernier Software
2920 SW 89th Street
Portland, OR 97225
503/297-5317

Chem Fax™ (Polymer activities, other chemistry demos and activities)
Flinn Scientific Inc.
P. O. Box 219
131 Flinn Street
Batavia, IL 60510
708/879-6900

Memory Metal (aka "Muscle Wires" to make robots!) (about $35 for the materials and instructions for 15 projects)
Mondo-tronics
524 San Anselmo Avenue #107-20
San Anselmo, CA 94960
800/374-5764 or 415/455-9330

Supersaturated solutions and weather modeling ("Re-Heaters" $10)
Arbor Scientific
P. O. Box 2750
Ann Arbor, MI 48106-2750
800/367-6695 or 313/663-3733

Hand-held diode lasers ($30) and experiments using them
Metrologic Instruments
P. O. Box 307
Bellmawr, NJ 08099
800/436-3876 or 609/228-8100

Project STAR spectrometer ($7)
Learning Technologies
59 Walden St.
Cambridge, MA 02140

Low Cost Equipment for Teaching Chemistry, by K. Sane and D. West ($30)

This is a manual of construction of low-cost devices with experiments and applications. Many activities deal with aspects of biochemistry and medical chemistry. No experience in instrument fabrication is assumed; soldering, printed circuit board making and circuit board assembly are described in detail.

Peter Towse, Editor
INCE
CSSME
University of Leeds LS2 9JT
United Kingdom

POLYED National Information Center for Polymer Education

This facility offers descriptions of several polymer-related devices for K through college courses. When contacting the Center, be sure to indicate that you are interested in "devices" and specify the grade-level of your interest. Send your requests to

Professor John P. Droske, Director
POLYED National Information Center for Polymer Education
University of Wisconsin-Stevens Point
Department of Chemistry
Stevens Point, WI 54481
715/346-3703

And for your electronics needs, you may want to check out the following two suppliers (ask for a free catalog):

Mouser Electronics	All Electronics
800/346-6873	800/826-5432

About ICE

Overview

The Institute for Chemical Education was established in 1983 to provide a center for scientists and science educators to develop and disseminate their ideas for more effective approaches to the teaching of chemistry, and science in general. All of ICE's programs emphasize hands-on science, taught interactively as a means of helping students develop powers of observation and problem-solving. ICE aims to stimulate the scientific curiosity of *all* students, not just those traditionally well-served by our educational system.

At Field Centers across the country, ICE designs and conducts workshops that help elementary middle and high school teachers overcome some of the common obstacles they face in their efforts to deliver first-rate science education. ICE develops programs for students that can be carried out in a variety of settings with limited resources. In addition, ICE creates educational materials that help teachers introduce hands-on, interactive activities in their classrooms and laboratories.

ICE's programs are structured to involve many individuals and a cross-section of the scientific and educational communities in the effort to revitalize the teaching of science. Only by broadening involvement in this way can the enormous problems we face in science education be addressed effectively.

Workshops for Teachers

Chemistry Activities	Participants learn to conduct in-service programs to help K-8 teachers use more hands-on science activities.
Chemistry Fundamentals	Workshops for teachers of grades 6–9 physical science and 10–12 chemistry who have limited training in their subject areas.
Chemistry Instrumentation	Experienced high school and two-year college instructors update their knowledge of the practice of modern chemistry.
Super Science Connections	K–3 teachers integrate language skills, art, mathematics, social studies, etc. into a hands-on science curriculum.

Programs for Students

Chemistry Camps	Students in grades 5–8 explore the wonders of chemistry through hands-on laboratory experience.
SPICE (Student-Presented Interactive Chemistry Experiences)	University students and high school students of former workshop participants experience the joy of presenting chemistry to school groups and the general public.

Educational Materials

Activities Guidebooks	ICE is producing a series of teacher's guides to science activities for classroom use in grades K–12.
Laboratory Assessment	Award-winning high school teachers and university consultants helped ICE develop improved procedures to measure knowledge and skills gained from laboratory activities.
Topics in Chemistry	A series of monographs, developed by an ICE fellow, provides teachers with background information on a variety of everyday topics in chemistry.
Low-Cost Instruments	ICE has produced instructions for building inexpensive instruments that can be used to introduce modern chemical techniques to students.
Outreach	Publications detailing how to organize and operate Chemistry Camp and SPICE outreach programs.
Solid-State Model Kit	The Model Kit can be used to build nearly 60 different crystalline solid structures in a layer-by-layer manner.

Broadening Involvement

Newsletter	ICE seeks to maintain the involvement of past workshop participants and others through a quarterly newsletter.
Field Centers	ICE, headquartered at the University of Wisconsin–Madison, offers workshops and student programs and conducts research and development activities at seven other universities across the country.
Affiliates	University and college affiliates organize and present workshops for local teachers based on the ICE model.
Fellowships	ICE provides opportunities for educators and scientists to devote up to a year developing their ideas for programs and materials to improve science education.
Outreach	Workshop participants present in-service programs for other teachers and administrators. ICE loans commercial equipment to participants in the Instrumentation workshop to use for outreach. Each participant reaches an average of 40 other teachers.
Minority Programs	ICE offers certain workshop sessions to help teachers better address the needs of groups of students not proportionately represented in the sciences.

Solid-State Model Kits

available from ICE, the Institute for Chemical Education

Have you ever tried to describe the structure of a crystal with a two-dimensional drawing? Have you ever wished for a macroscopic model of a material so that you could instantly explain its physical properties?

We've got it! The Solid-State Model Kit allows you and your students to easily build and study structural models of metals, ionic compounds, and even superconductors. See instantly how atomic packings determine physical properties—density, cleavage planes, conductivity directions. Our Kit is an excellent tool to present sphere packing, unit cells, coordination number, radius ratios, and interpenetrating polyhedra.

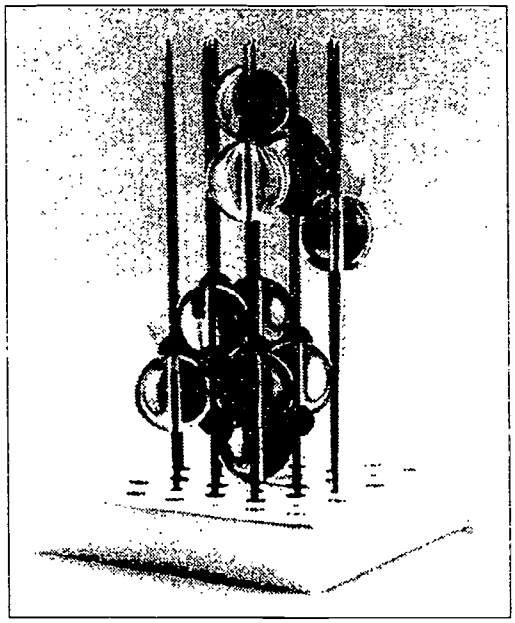

The Model Kit is designed for individual use, laboratory use, tutorials, and lecture demonstrations and is available in both Deluxe and Student versions. Using the detailed Instruction Manual that comes with each Kit, students build crystal structures one atom (or ion) at a time, permitting them to recognize repeating patterns within structures. Completed structures are approximately 4" × 4" × 6".

Deluxe Kit: It can be used to build over 70 different molecular structures. Its main parts include the Instruction Manual, bases, templates that fit over the bases, metal rods that insert into holes in the bases, and four different-sized spheres that slide onto the rods. The price for the Deluxe Kit is $110 ($140 foreign and Canada). Order No. 92-004.

Student Kit: It can be used to build more than 60 structures. The primary difference between the Deluxe and Student Kits is in the quantity of spheres and rods. Because it contains fewer of these parts, we are able to offer the Student Kit at a substantially lower price. Two Student Kits can be combined to build all of the crystal structures in the Instruction Manual. Price: $65 ($90 foreign and Canada). Order No. 94-006.

Payment must be in U.S. funds drawn on a U.S. bank by credit card, magnetically encoded check, or international money order payable to ICE. For more information, contact the Institute for Chemical Education, Department of Chemistry, University of Wisconsin—Madison, 1101 University Avenue, Madison, WI 53706-1396; phone (608)262-3033; FAX (608)262-0381; e-mail: ICE@chem.wisc.edu

Minimum Safety Guidelines for Chemical Demonstrations

ACS Division of Chemical Education

Chemical Demonstrators *Must:*

1. know the properties of the chemicals and the chemical reactions involved in all demonstrations presented.
2. comply with all local rules and regulations.
3. wear appropriate eye protection for all chemical demonstrations.
4. warn the members of the audience to cover their ears whenever a loud noise is anticipated.
5. plan the demonstration so that harmful quantities of noxious gases (e.g., NO_2, SO_2, H_2S) do not enter the local air supply.
6. provide safety shield protection wherever there is the slightest possibility that a container, its fragments or its contents could be propelled with sufficient force to cause personal injury.
7. arrange to have a fire extinguisher at hand whenever the slightest possibility for fire exists.
8. **not** taste or encourage spectators to taste any non-food substance.
9. **not** use demonstrations in which parts of the human body are placed in danger (such as placing dry ice in the mouth or dipping hands into liquid nitrogen).
10. **not** use "open" containers of volatile, toxic substances (e.g., benzene, CCl_4, CS_2, formaldehyde) without adequate ventilation as provided by fume hoods.
11. provide written procedure, hazard, and disposal information for each demonstration whenever the audience is encouraged to repeat the demonstration.
12. arrange for appropriate waste containers for and subsequent disposal of materials harmful to the environment.

ICE Publication No. 94-010

Insititute for Chemical Education
Department of Chemistry
University of Wisconsin–Madison
1101 University Avenue
Madison, WI 53706