DOCUMENT RESUME

ED 362 638 CE 064 298

AUTHOR	Walter, Diana M.
TITLE	Developing "Real World" Applications for Academic Concepts...A Teacher's Guide.
INSTITUTION	Partnership for Academic and Career Education, Pendleton, SC.
PUB DATE	92
NOTE	86p.
PUB TYPE	Guides - Classroom Use - Teaching Guides (For Teacher) (052)
EDRS PRICE	MF01/PC04 Plus Postage.
DESCRIPTORS	*Academic Education; Basic Skills; High Schools; *Integrated Curriculum; *Learning Modules; Lesson Plans; Material Development; Partnerships in Education; *Teacher Developed Materials; Teaching Guides; *Technology Education; Two Year Colleges; *Vocational Education
IDENTIFIERS	*Tech Prep

ABSTRACT

This handbook is intended to give the classroom teacher some practical tips for developing "real-world" applications that can be used to teach academic concepts. Chapter I presents a rationale for use of applied academics, describes applied academics, discusses academic and vocational integration, and describes applied teaching methodologies. Chapter II focuses on where to start when developing applications. It considers reviewing current course materials and activities and where to find applications. Chapter III addresses identification of a local source for developing the application. Chapters IV, V, and VI describe documenting the activity, enhancing the module, and pilot testing, modifying, and sharing. Appendixes include a listing of the characteristics of good curricula and the most/least effective teaching strategies, sample forms for developing integrated lesson plans, checklist for developing real-world applications, sample of a completed teaching module, and Secretary of Labor's Commission on Achieving Necessary Skills competencies. (YLB)

Developing "Real World" Applications for Academic Concepts

...A Teacher's Guide

Partnership for Academic and Career Education (PACE)
P.O. Box 587
Pendleton, SC 29670
(803) 646-8361, ext. 2107

This guide was developed by Diana M. Walter, Executive Director, Partnership for Academic and Career Education, P. O. Box 587, Highway 76, Pendleton, SC 29670. Telephone numbers (803) 646-8361, ext. 2378, or Anderson County: 225-2250, Oconee County: 882-4412, Pickens County : 859-7033.
(July, 1992)

Developing "Real-World" Applications for Academic Concepts

...*A Teacher's Guide*

Partnership for Academic and Career Education (PACE)
P.O. Box 587
Pendleton, SC 29670
(803) 646-8361, ext. 2107

Developing "Real-World" Applications for Academic Concepts
...A Teacher's Guide

TABLE OF CONTENTS

APPENDICES

DEVELOPING "REAL-WORLD" APPLICATIONS FOR ACADEMIC CONCEPTS

I. INTRODUCTION AND RATIONALE

This handbook is intended to give you, the classroom teacher, some practical tips for developing "real world" applications that can be used to teach academic concepts. What can be accomplished from using real-world applications? Among the possible justifications and outcomes are:

- students are more motivated to learn academic concepts when they see a reason to learn them;
- when students are more motivated to learn, they can often achieve higher standards, retain information more effectively and transfer information better from one context to another;
- real-world applications, especially those derived from local businesses, can provide students with some understanding of careers and the companies located within their own communities;
- real-world applications can also stimulate more interaction between students and their parents, particularly if a classroom application features the company with which the parent is employed!

A. APPLIED ACADEMICS AND TECH PREP PROGRAMS

Most of the Tech Prep (PREParation for TECHnologies) programs being implemented across the country involve three major curriculum-related components: 1) implementation of applied academics and the integration of academic and occupational content; 2) the blending of academic and occupational coursework into focused pathways that meet the entry-level requirements for specific types of employment or occupational Associate Degree programs, and 3) the articulation of secondary and postsecondary curricula to eliminate redundancy and to provide qualified students with advanced standing for Associate Degree programs. Of those three components, the implementation of applied academic courses at the secondary level is probably the greatest reform-oriented aspect of the Tech Prep initiative. And because most high schools are using the same materials for applied academics, these courses may come the closest to a national curriculum that has ever existed in the United States.

1. Why Applied Academics?

The use of applied academics became popular in Tech Prep programs as a way to motivate students, who were not taking college preparatory coursework, to reach higher academic standards. The theory is that if academic content is made more relevant, participatory and stimulating, students will respond more positively. (Some educators believe that an applied approach is effective simply because it

matches the learning styles of many students who are not particularly successful with the the traditional, lecture-based format.)

Much of the research on effective learning environments supports the concept of applied academics. In fact, studies have shown that children, and adults, learn best in an environment that requires active processing, stimulates creativity and innovation, and that includes authenticity or meaningful content. How these learning environments are constructed is directly related to the teaching methodologies used in the classroom. For example, of the twenty most commonly used teaching strategies, the most effective are those that require the highest level of active participation on the part of the student. Techniques such as guided practice, role playing, writing and interviewing are listed as the most effective. Among the least effective strategies are lecturing, panel presentations, viewing films or tapes and exhibiting/explaining materials. Strategies calling for more active participation of students, as well as eight other characteristics of good curricula identified by national groups, are among the essential elements of comprehensive Tech Prep programs. (For a listing of the characteristics of good curricula and the most/least effective teaching strategies, see **APPENDIX A.**)

While applied academics are a critical component of Tech Prep programs for most students, it's important to remember that there is another option. Tech Prep means PREParation for TECHnologies--educational preparation for the types of careers that require some vocational training in high school up to and including an occupational Associate Degree, either to meet entry-level employment requirements or to qualify for advancement. Students should always be encouraged to take the highest level of academic coursework they can handle effectively. Because successful completion of college preparatory (CP) courses would enable a student to go in any direction after high school, they are typically considered to be the "highest level*." Therefore, numbers of Tech Prep students who aspire to careers which require less education than a Bachelor's Degree can, and do, take college preparatory academics in combination with appropriate occupational courses and guided work experience. Many schools in the PACE Consortium use applied academic courses as a way of reaching capable students who are not taking advantage of CP level courses, or as a springboard into CP courses for students who need extra support to build confidence in their academic abilities.

---

* A debate is underway in many states concerning whether or not applied academic courses will be accepted for freshmen admission to state-supported four-year colleges. While these courses were never intended for baccalaureate-bound students, several states and numerous individual senior colleges now accept them for freshmen admission. In any case, students who take applied academics and then decide they want to enter a state-supported senior college can always enter a University Transfer program at a community/technical college and transfer into a bachelor's degree program.

2. What Are Applied Academics?

There has been, and there will continue to be, much discussion over this issue. While the term "applied math," for example, tends to conjure up old ideas of shop math, consumer math and other potentially watered-down approaches, the intention of applied coursework in Tech Prep programs is much different. Applied academics simply means the use of certain types of teaching methodologies that result in students reaching higher standards because of a more relevant, "hands-on" approach to learning. For example, some educators may consider a Business Communications course to be an applied English course. How the course is taught, and what is emphasized in classroom activities, may actually determine how the course should be categorized. If the major focus is on writing business letters, memos, etc. where emphasis is placed on format rather than content, the course would not fit the definition of an applied English course. (This is not meant to imply that this type of course has no value). However, if business letters and memos are used to illustrate clear, concise and/or persuasive writing, without putting undue emphasis on formatting beyond helping students see the connection, then the course fits the definition of an applied English course. The applied approach to teaching academic content in Tech Prep programs should not be focused on teaching narrow job tasks. (In this example, the blending of academic and occupational coursework, in purposeful and integrated ways, is what provides Tech Prep students with the skills needed in BOTH English and business-related content.)

3. What is Academic and Vocational Integration?

The concept of academic and vocational integration has been receiving a great deal of attention lately in the literature and in some federal programs. As with most educational initiatives, there are a variety of definitions and approaches used to implement academic and vocational integration--some deal with activities that occur at the classroom level while others concentrate on approaches at the curriculum level. Basically, integration involves instruction that incorporates examples from one discipline used to teach or reinforce concepts from another discipline. (Obviously there are many aspects of integration used in Tech Prep programs and in the applied academic courses associated with these programs.)

Integration can be as simple as teachers from academic and occupational areas team teaching a course or working together to plan joint activities for students. An example might be a project where students from both math and electronics classes work collaboratively to accomplish tasks involving complementary concepts from both disciplines. Another example might involve physics and automotive classes where the teachers have planned to teach the concept of force simultaneously so each one reinforces the other and students are better able to see the connections. To give you some ideas for integration at the classroom level, see the sample forms for developing integrated lesson plans contained in **APPENDIX B.**

B. APPLIED TEACHING METHODOLOGIES

What are applied methodologies? Again, there is room for debate on exactly what applied teaching methodologies are and how they should be used in the classroom. Some people define applied methodologies in a fairly narrow sense, while others take a broader view. However, applied teaching methodologies typically involve one or more strategies, activities or techniques that:

- illustrate connections between an academic concept and a "real-life" example of how that concept is used (the example may or may not be directly related to a career/job task);
- require students to become more actively involved in the learning process either as individuals or as part of a collaborative work group;
- utilize computer-based technology in an interactive manner as opposed to drill and practice;
- foster creative thinking, problem-solving, team work and complex/higher-order thinking skills;
- make connections between disciplines, across levels of education and between education and the community;
- utilize simulations, work-based learning or other approaches that integrate experiences outside the "classroom walls" to reinforce or expand learning;
- require teachers to act more as facilitators and less as "managers" of the learning process.

Using applied teaching methodologies effectively in the classroom requires a great deal of skill, confidence and creativity on the part of the teacher. Most teachers select different methodologies to fit the particular concept that needs to be taught and they may utilize various approaches simultaneously. A successful teacher of applied academics, or any course, does not rely solely on one approach and utilizes lecture, drill and other traditional methodologies where appropriate.

II. DEVELOPING APPLICATIONS: WHERE TO START

The best way to begin developing real-world applications is to identify the specific concepts you want to teach and where the activities should fit into your instructional plans.

A. Reviewing Current Course Materials and Activities

As a teacher of applied academics, you are probably using some of the professionally developed materials published by the Center for Occupational Research and Development (CORD) and/or the Agency for

Instructional Technology (AIT). Therefore, you may already know which units, lessons or activities need to be modified or enhanced in order to help students achieve a better understanding of specific concepts. If not, the four steps listed below may provide some helpful starting points.

1. Identify units, lessons or activities where you find students are having difficulty or could benefit from additional review.

2. Prioritize identified areas. (Have you identified any "critical points" where knowledge of a certain concept serves as a particularly important building block for later units? Are there lessons which typically fall during a time in the semester where students need a boost, something to get them more actively involved? Are there applications provided in your material that students joke about or think are "stupid?")

3. Narrow your selections to three and document the specific academic concepts you want to illustrate. Define the concepts clearly so you could explain them to someone who does not teach in your field or to someone who is not an educator. (This will be important later!)

4. Determine how much time you want to spend illustrating each academic concept through the use of an application--one class period? Two periods?

Now that you've identified and defined the concepts you want to reinforce, as well as where they fit into your course plans, and the approximate amount of time you want to spend teaching them, you're ready to develop the application.

B. Where to Find Applications

Where are appropriate places to look for real-world applications? Anywhere! You can find applications through local companies, the media, friends and relatives who have jobs outside education, people within the school environment, your school's business partner, vocational classrooms, community organizations, social service agencies, technical colleges, universities, junk mail, household products--the list is virtually endless!

The real "trick" to finding good sources of applications is to get in the right frame of mind, particularly if this is all new to you. (Of course, many effective teachers have been doing this type of thing for years and may even find it amusing that "the system" is just now catching on!)

The first step in finding a good application for the academic concept you've identified is to spend some time exploring and writing down various possibilities. Don't put a lot of pressure on yourself to find the "perfect" application. Whatever you come up with will be a good starting point--you can always change it, modify it, or scrap it in favor of a better alternative!

While effective applications do not have to be career-related, the emphasis in Tech Prep programs is to try and utilize more of these types of applications in academic courses. Career-related applications are particularly important because they serve purposes beyond just getting students more actively involved in the learning process. They help foster a better understanding of careers, they make the point that academic skills are needed for reasons beyond collecting units for high school graduation, and they help students learn more about the companies within our own communities. Therefore, the remainder of this handbook will be devoted to helping you develop career-related applications for use in your academic classes.

III. DESIGNING APPLIED COURSE MATERIALS

Now that you know the academic concept you want to reinforce through the use of an application, you need to identify a local source for developing the application. You undoubtedly have your own ideas on who to contact or where to start. But if you don't, some possibilities are listed below.

A. Sources for Potential Business/Community Contacts

To locate one or more contact persons who will help you identify a real-world application, you could try any one of these sources: 1) PACE Speaker's Guide; 2) the contact person for your school's business partner; 3) your vocational director or the chairperson of your school or district vocational advisory committee; 4) your staff development coordinator; and/or 5) your district business/industry coordinator, if appropriate.

B. Making the Contact

Once you identify several business persons who might be able to help, you should contact those individuals and explain what you would like to do. Give the person some background information so they will have a better understanding of your goals and what their role will be. Be sure to explain that you would like to visit (don't try to do this over the phone) and that you will probably need an hour or so of their time, at least for the first visit.

C. Conducting the Background Research

There are several things you should do, or plan for, in order to make this experience worthwhile for you and helpful for your business contact person. Included in **APPENDIX C** is a checklist and an outline

of activities which may be useful in completing your on-site research. In addition to the checklist, here are some additional "tips" for working with people from the business community:

1. Sometimes when you first ask a business person for ways in which he/she uses, for example, communications skills on the job, you may not get much of a response. (Because most people don't spend much time analyzing what they do on a day-to-day basis.) If the person appears "stuck," ask them to show you samples of materials they have developed, documents they routinely use or just to describe a typical day or week. You'll need to listen to those responses carefully so <u>you</u> can determine where specific math, communication or other skills may exist.

2. Because you will have told the business person that you are developing material to teach students some type of academic concept, the business person may want to show you ways his company teaches basic skills or examples of training materials. While you may be interested in these examples, you may need to gently steer the person back onto the right track--i.e., just showing you <u>ways</u> that he/she <u>uses</u> math, science, English, etc. to accomplish a specific job-related task or assignment. (Remind the person that you'll be developing the instructional materials and that you are just looking for illustrations of how the academic concept is used in the "real world.")

3. If you ask a business person for samples of job descriptions, career information or salary trends to use as part of your activity, the person you're speaking with may have to get that information from another department. Don't be discouraged if it takes a while to get that kind of information. (And some companies won't share job/salary information but it's still worth asking for--after all, "nothing ventured, nothing gained!")

IV. DOCUMENTING THE ACTIVITY

While you undoubtedly have your own style and preferences concerning the extent to which a classroom activity should be documented, it might be helpful to write up or "package" the process you plan to use for teaching your application. This would be particularly helpful if you plan to share your work with other teachers (and PACE hopes that you will!) or if someone else, such as a practicing or substitute teacher, should ever need to teach the module for you.

The PACE Office has published several teaching modules with applications using a format that seems to be effective. Included in **APPENDIX D** is a sample module that might give you some ideas for documenting your activities. (Obviously there are many ways to do this so don't feel constrained by what we did--you may come up with something better!)

V. ENHANCING YOUR MODULE

Once you have completed a draft of your teaching module, you might want to review it to determine whether or not the material could or should be enhanced. While it certainly is not necessary that every module contain enhancements, they can add to the value of the activity. You may decide that some enhancements are appropriate right away while others might be developed later after you've pilot-tested the material. In any case, here are some questions to consider in developing enhancements:

1. Does your module encourage teamworking through collaborative assignments?

2. Are activities included which build problem-solving or higher-order thinking skills?

3. Are activities included which respond to the SCANS competencies such as requiring students to use technology or demonstrate skills in using appropriate research techniques to gather information? (See **APPENDIX E** for information on SCANS competencies.)

4. Have you included information on the company, the career and related postsecondary education opportunities in our area?

5. Are there handouts, worksheets or other documents that should be developed for students to make the experience more effective?

6. Will you invite your business contact person or someone else from the field to "set the stage" for students before they begin the activity?

7. Would it be possible to involve a class from another discipline in some aspect of the module?

8. How will you assess student learning after completing the module activities?

VI. PILOT-TESTING, MODIFYING AND SHARING

As with any curriculum-related activity, pilot-testing the material is an essential part of the process. Once you have used the module you will find things that need to be changed or improved, either to make it easier for you to teach or to make it a more effective learning experience for the students.

We hope that you will be willing to share your material and experiences with other teachers, particularly those from our consortium. Some of the most exciting and creative aspects of the Tech Prep initiative, and the new applied academic curriculum, are

not those developed commercially but those developed by teachers. There are two specific ways we hope you will consider in sharing your materials and experiences. First, we would like you to send the PACE Office copies of your modules so we might share them with others. (We share materials on a local, state and national basis so be sure to tell us if you have preferences concerning how your material is disseminated!) Second, we hope you will bring your modules to one of the three teacher network meetings that PACE hosts each year. As you may know, the teacher networks were established to give teachers an opportunity to share and learn from one another. While we know your material will be valuable to others, we believe that just the process of describing what you've done will be an enjoyable experience for you as well. (And someone else may share an idea that would make your material and classroom activities even better!)

One last thing. If you discover ways that this handbook could be improved, please share those ideas too! We'd really like to hear your suggestions, so please contact the PACE Office at the address and appropriate telephone number listed on the first page of this booklet.

APPENDIX A

Experience Impact in Learning

Experience impact is the sum total of (1) the use of the senses in learning, (2) the interactions and reactions of the individual, and (3) the active involvement of the learner in the learning process.

Based on the finds of studies to identify the most effective teaching methods according to the experience impact level, the following practices were ranked as indicated below.

1. Lecturing	Low
2. Visualized Lecturing	Low
3. Panel Presentations	Low
4. Viewing Film or Instructional Television	Low
5. Listening to Tape, Recordings, or Radio	Low
6. Exhibiting and Explaining Materials/Work	Medium-Low
7. Observing and Reporting	Medium-Low
8. Demonstrating	Medium
9. Structured or focused Interviewing Activity	Medium
10. Nondirective Interviewing	Medium-High
11. Discussing in Groups	Medium
12. Reading	Medium
13. Analyzing and Calculating	Medium
14. Brainstorming	Medium
15. Testing	Medium
16. Buzz Session	Medium
17. Field Trip	Medium-High
18. Role Playing	Medium-High
19. Writing	High
20. Guided Practice	High

(Information on the original source of this material is not available.)

Characteristics of Good Curricula

All the national content area reports for the last 5 years abound with powerful, practical ideas about what American students should learn and how they should learn it.

Almost all call for:

- *Higher expectations and standards for all students, not just the university-bound; more challenging and interesting content for everyone, based on the assumption that all students can learn.*
- *More responsiveness to the diverse needs of an increasingly diverse student body.*
- *More active learning for students and less passivity; more hands-on, direct opportunities to "make meaning" with language, science, mathematics, writing, etc., and fewer remote, irrelevant, or concocted educational experiences; more primary sources, orignal documents, "real life" contexts.*
- *More small-group and less isolated learning; more time spent working together democratically, as people do in real work and civic situations, and less time spent in competitive learning environments.*

Note: This material is derived from *State of Scene: Science Education in the Nation,* provided in conjunction with the Public Health Service National Conference, 1991.

These general recommendations are derived from a report on the First National Curriculum Congress, 1990:

- *More authentic performance assessment of students and educators and less emphasis on standardized testing; more accountability for robust learning experiences and a lot less for test scores.*
- *More critical and creative thinking and problem solving for students and less emphasis on rote knowledge, drill, and memorization.*
- *More learning for understanding and less learning for grades or scores; more learning how to learn throughout life.*
- *More organization of time around student learning, less around adult or bureaucratic needs.*
- *More diverse kinds of teaching and learning opportunities in order to accomplish the goals noted above.*

It should be stressed that these common themes emerge in each case from concern that students be solidly grounded in the facts, essential knowledge, and modes of operation central to each discipline. Fundamental knowledge has not been displaced by concern with processes; rather, new and more powerful processes of learning and teaching have come to be seen as critical if all students are to master a more challenging curriculum.

APPENDIX B

INTEGRATED LESSON PLAN - COMMUNICATIONS

Course_____ **Unit**_____ **Teacher**_____

See other side for information and directions.

Communications Concept Week:_____ Day:_____	**Mathematics Task** Teacher:_____ Week:_____ Day:_____	**Science Task** Teacher:_____ Week:_____ Day:_____	**Occupational Task** Teacher:_____ Week:_____ Day:_____	**Other Task Area or Supporting Activities**
Outcomes				

Background Information: The concept of integration basically means forming connections between different subjects or disciplines. The idea is to purposefully develop connections between subject areas so that each one reinforces the other. As a result, learning becomes more meaningful and relevant, and students improve their abilities to transfer learning from one situation to another. (An important skill for academic succes as well as for success the "real world!") While some types of curriculum integration can be fairly complex, this exercise is intended to introduce the concept at the classroom level.

Directions: 1. Start by identifying a concept from your own subject area that you would like to have reinforced through other disciplines. Determine when you plan to teach that concept (i.e., week and/or day).

2. Then meet with the teachers from one or more other subject areas and identify tasks or activities from those area(s) that could reinforce the concept you want to teach. (You may have to discuss this with several colleagues to identify appropriate tasks or activities. NOTE: It's not always necessary that the activity involve a field trip or a visit to another class. You could, for example, simply use written materials or documents that you've found from other disciplines or real-world situations to teach or reinforce your concept.)

3. Design or plan the activity, especially if it involves a field trip or visiting another class. Document on your chart when the activity will take place and indicate, if appropriate, the order in which activities will occur.

Examples:

Mathematics Concept	Communications Task	Science Task	Occupational Task	Other Task Area or Supporting Activities
Reading charts and graphs **Outcomes** -students will gather real data, develop various forms of charts and graphs, analyze data, and prepare written and oral reports.	(3) Work with the English teacher; have students write paragraphs in English class explaining and analyzing information from the graphs they've developed.	(1) Visit Chemistry class and participate in lab where students are identifying pH levels of various household products; design appropriate charts based on data collected.	(2) Visit Food Science class when they begin planning for advisory committee luncheon; identify foods that will be served and determine fat/cholesterol levels. Design appropriate charts based on data collected.	

Communications Concept	Mathematics Task	Science Task	Occupational Task	Other Task Area or Supporting Activities
Persuasive writing **Outcomes** --students will develop a survey instrument, administer it, and analyze the results to determine best concepts on which to base writing activity. --students will conduct research in the library and guidance office to obtain additional information needed to write their brochures. --in teams, students will write sections of a brochure, using persuasive writing skills, that describe why students should enroll in Cosmetology. --the brochures developed by each team will be given to the Cosmetology class for possible use in future promotional materials.	(3) Analyze responses from student/teacher interview process. Calculate the percentages of responses in various categories to determine the most common, least common answers.		(2) Visit Cosmetology program,; interview students and teacher to determine why Cosmetology is a good program and why other students should be interested in enrolling.	(4) Conduct research on job opportunities and salary ranges for licensed cosmetologists. (1) Design instrument for interviews.

(Developed by D. Walter, PACE, P.O. Box 587, Pendleton, SC 29670, May 1992; based on material from J. LiaBraaten, MVCRC, Lexington, MA.)

INTEGRATED LESSON PLAN - MATHEMATICS

Course_____ **Unit**_____ **Teacher**_____

See other side for information and directions.

Mathematics Concept Week:_____ Day:_____	**Communications Task** Teacher:_____ Week:_____ Day:_____	**Science Task** Teacher:_____ Week:_____ Day:_____	**Occupational Task** Teacher:_____ Week:_____ Day:_____	**Other Task Area or Supporting Activities**
Outcomes				

Background Information: The concept of integration basically means forming connections between different subjects or disciplines. The idea is to purposefully develop connections between subject areas so that each one reinforces the other. As a result, learning becomes more meaningful and relevant, and students improve their abilities to transfer learning from one situation to another. (An important skill for academic succes as well as for success the "real world!") While some types of curriculum integration can be fairly complex, this exercise is intended to introduce the concept at the classroom level.

Directions: 1. Start by identifying a concept from your own subject area that you would like to have reinforced through other disciplines. Determine when you plan to teach that concept (i.e., week and/or day).

2. Then meet with the teachers from one or more other subject areas and identify tasks or activities from those area(s) that could reinforce the concept you want to teach. (You may have to discuss this with several colleagues to identify appropriate tasks or activities. NOTE: It's not always necessary that the activity involve a field trip or a visit to another class. You could, for example, simply use written materials or documents that you've found from other disciplines or real-world situations to teach or reinforce your concept.)

3. Design or plan the activity, especially if it involves a field trip or visiting another class. Document on your chart when the activity will take place and indicate, if appropriate, the order in which activities will occur.

Examples:

Mathematics Concept	Communications Task	Science Task	Occupational Task	Other Task Area or Supporting Activities
Reading charts and graphs **Outcomes** -students will gather real data, develop various forms of charts and graphs, analyze data, and prepare written and oral reports.	(3) Work with the English teacher; have students write paragraphs in English class explaining and analyzing information from the graphs they've developed.	(1) Visit Chemistry class and participate in lab where students are identifying pH levels of various household products; design appropriate charts based on data collected.	(2) Visit Food Science class when they begin planning for advisory committee luncheon; identify foods that will be served and determine fat/cholesterol levels. Design appropriate charts based on data collected.	

Communications Concept	Mathematics Task	Science Task	Occupational Task	Other Task Area or Supporting Activities
Persuasive writing **Outcomes** --students will develop a survey instrument, administer it, and analyze the results to determine best concepts on which to base writing activity. --students will conduct research in the library and guidance office to obtain additional information needed to write their brochures. --in teams, students will write sections of a brochure, using persuasive writing skills, that describe why students should enroll in Cosmetology. --the brochures developed by each team will be given to the Cosmetology class for possible use in future promotional materials.	(3) Analyze responses from student/teacher interview process. Calculate the percentages of responses in various categories to determine the most common, least common answers.		(2) Visit Cosmetology program.; interview students and teacher to determine why Cosmetology is a good program and why other students should be interested in enrolling.	(4) Conduct research on job opportunities and salary ranges for licensed cosmetologists. (1) Design instrument for interviews.

(Developed by D. Walter, PACE, P.O. Box 587, Pendleton, SC 29670, May 1992; based on material from J. LiaBraaten, MVCRC, Lexington MA.)

INTEGRATED LESSON PLAN - SCIENCE

Course_____ **Unit**_____ **Teacher**_____

See other side for information and directions.

Science Concept Week:_____ Day:_____	**Communications Task** Teacher:_____ Week:_____ Day:_____	**Mathematics Task** Teacher:_____ Week:_____ Day:_____	**Occupational Task** Teacher:_____ Week:_____ Day:_____	**Other Task Area or Supporting Activities**
Outcomes				

ground Information: The concept of integration basically means forming connections between different subjects or disciplines. The idea is to purposefully develop connections between subject areas so that each one reinforces the other. As a result, learning becomes more meaningful and relevant, and students improve their abilities to transfer learning from one situation to another. (An important skill for academic succes as well as for success the "real world!") While some types of curriculum integration can be fairly complex, this exercise is intended to introduce the concept at the classroom level.

Directions: 1. Start by identifying a concept from your own subject area that you would like to have reinforced through other disciplines. Determine when you plan to teach that concept (i.e., week and/or day).

2. Then meet with the teachers from one or more other subject areas and identify tasks or activities from those area(s) that could reinforce the concept you want to teach. (You may have to discuss this with several colleagues to identify appropriate tasks or activities. NOTE: It's not always necessary that the activity involve a field trip or a visit to another class. You could, for example, simply use written materials or documents that you've found from other disciplines or real-world situations to teach or reinforce your concept.)

3. Design or plan the activity, especially if it involves a field trip or visiting another class. Document on your chart when the activity will take place and indicate, if appropriate, the order in which activities will occur.

Examples:

Mathematics Concept	Communications Task	Science Task	Occupational Task	Other Task Area or Supporting Activities
Reading charts and graphs **Outcomes** -students will gather real data, develop various forms of charts and graphs, analyze data, and prepare written and oral reports.	(3) Work with the English teacher; have students write paragraphs in English class explaining and analyzing information from the graphs they've developed.	(1) Visit Chemistry class and participate in lab where students are identifying pH levels of various household products; design appropriate charts based on data collected.	(2) Visit Food Science class when they begin planning for advisory committee luncheon; identify foods that will be served and determine fat/cholesterol levels. Design appropriate charts based on data collected.	

Communications Concept	Mathematics Task	Science Task	Occupational Task	Other Task Area or Supporting Activities
Persuasive writing **Outcomes** --students will develop a survey instrument, administer it, and analyze the results to determine best concepts on which to base writing activity. --students will conduct research in the library and guidance office to obtain additional information needed to write their brochures. --in teams, students will write sections of a brochure, using persuasive writing skills, that describe why students should enroll in Cosmetology. --the brochures developed by each team will be given to the Cosmetology class for possible use in future promotional materials.	(3) Analyze responses from student/teacher interview process. Calculate the percentages of responses in various categories to determine the most common, least common answers.		(2) Visit Cosmetology program,; interview students and teacher to determine why Cosmetology is a good program and why other students should be interested in enrolling.	(4) Conduct research on job opportunities and salary ranges for licensed cosmetologists. (1) Design instrument for interviews.

(Developed by D. Walter, PACE, P.O. Box 587, Pendleton, SC 29670, May 1992: based on material from J. LiaBraaten, MVCRC, Lexington, MA.)

INTEGRATED LESSON PLAN - OCCUPATIONAL

Course_____ **Unit**_____ **Teacher**_____

See other side for information and directions.

Occupational Concept Week:_____ Day:_____	**Communications Task** Teacher:_____ Week:_____ Day:_____	**Science Task** Teacher:_____ Week:_____ Day:_____	**Mathematics Task** Teacher:_____ Week:_____ Day:_____	**Other Task Area or Supporting Activities**
Outcomes				

Background Information: The concept of integration basically means forming connections between different subjects or disciplines. The idea is to purposefully develop connections between subject areas so that each one reinforces the other. As a result, learning becomes more meaningful and relevant, and students improve their abilities to transfer learning from one situation to another. (An important skill for academic succes as well as for success the "real world!") While some types of curriculum integration can be fairly complex, this exercise is intended to introduce the concept at the classroom level.

Directions: 1. Start by identifying a concept from your own subject area that you would like to have reinforced through other disciplines. Determine when you plan to teach that concept (i.e., week and/or day).

2. Then meet with the teachers from one or more other subject areas and identify tasks or activities from those area(s) that could reinforce the concept you want to teach. (You may have to discuss this with several colleagues to identify appropriate tasks or activities. NOTE: It's not always necessary that the activity involve a field trip or a visit to another class. You could, for example, simply use written materials or documents that you've found from other disciplines or real-world situations to teach or reinforce your concept.)

3. Design or plan the activity, especially if it involves a field trip or visiting another class. Document on your chart when the activity will take place and indicate, if appropriate, the order in which activities will occur.

Examples:

Mathematics Concept	Communications Task	Science Task	Occupational Task	Other Task Area or Supporting Activities
Reading charts and graphs **Outcomes** -students will gather real data, develop various forms of charts and graphs, analyze data, and prepare written and oral reports.	(3) Work with the English teacher; have students write paragraphs in English class explaining and analyzing information from the graphs they've developed.	(1) Visit Chemistry class and participate in lab where students are identifying pH levels of various household products; design appropriate charts based on data collected.	(2) Visit Food Science class when they begin planning for advisory committee luncheon; identify foods that will be served and determine fat/cholesterol levels. Design appropriate charts based on data collected.	

Communications Concept	Mathematics Task	Science Task	Occupational Task	Other Task Area or Supporting Activities
Persuasive writing **Outcomes** --students will develop a survey instrument, administer it, and analyze the results to determine best concepts on which to base writing activity. --students will conduct research in the library and guidance office to obtain additional information needed to write their brochures. --in teams, students will write sections of a brochure, using persuasive writing skills, that describe why students should enroll in Cosmetology. --the brochures developed by each team will be given to the Cosmetology class for possible use in future promotional materials.	(3) Analyze responses from student/teacher interview process. Calculate the percentages of responses in various categories to determine the most common, least common answers.		(2) Visit Cosmetology program.; interview students and teacher to determine why Cosmetology is a good program and why other students should be interested in enrolling.	(4) Conduct research on job opportunities and salary ranges for licensed cosmetologists. (1) Design instrument for interviews.

(Developed by D. Walter, PACE, P.O. Box 587, Pendleton, SC 29670, May 1992; based on material from J. LiaBraaten, MVCRC, Lexington, MA.)

Integrated Lesson Plan Form

Form B

Teacher's Name _____ **Subject** _____

Week of: _____

Course Competency Being Taught:

(What you expect students to be able to do after the lesson.) OBJECTIVES	(How you will teach the objectives and the materials you will use.) PROCEDURES AND MATERIALS	(How you will evaluate or assess the objectives.) ASSESSMENT	(How will you reinforce these subjects) INTEGRATED ACTIVITIES
The Student Will:	____ Lecture Materials:	____ Written Test	COMMUNICATIONS
	____ Demonstration Materials:	____ Work Sheet	MATH
	____ Student Practice Materials:	____ Instructor Evaluation Observation to preset standard.	SCIENCE
	____ Small Group Activity Materials:	____ Practical Test	
	____ Field Trip or Collaborative Activity Materials	____ Technique Check Sheet	OTHER (Occupational or other academic.)
	____ Other _____ Materials:	____ Other _____	

Developed by:
A. Craig, Director, B.J. Skelton Career Center, Easley, S.C. and
D. Walter, Executive Director, PACE, Pendleton, S.C.
September 1992

Integrated Lesson Plan Form

Form B

Teacher's Name _____ **Subject** _____

Week of: _____

Course Competency Being Taught:

(What you expect students to be able to do after the lesson.) **OBJECTIVES**	(How you will teach the objectives and the materials you will use.) **PROCEDURES AND MATERIALS**	(How you will evaluate or assess the objectives.) **ASSESSMENT**	(How will you reinforce these subjects) **INTEGRATED ACTIVITIES**
The Student Will:	____ Lecture Materials:	____ Written Test	<u>COMMUNICATIONS</u>
	____ Demonstration Materials:	____ Work Sheet	<u>MATH</u>
	____ Student Practice Materials:	____ Instructor Evaluation Observation to preset standard.	<u>SCIENCE</u>
	____ Small Group Activity Materials:	____ Practical Test	
	____ Field Trip or Collaborative Activity Materials	____ Technique Check Sheet	<u>OTHER</u> (Occupational or other academic.)
	____ Other _____ Materials:	____ Other _____	

Developed by:
A. Craig, Director, B.J. Skelton Career Center, Easley, S.C. and
D. Walter, Executive Director, PACE, Pendleton, S.C.
September 1992

APPENDIX C

DEVELOPING "REAL-WORLD APPLICATIONS FOR ACADEMIC CONCEPTS
CHECKLIST

SECTION I

Business contact/interviewee name: _____

Position title: _____

Mailing address: _____

Phone: _____ FAX: _____ Date: _____

SECTION II - BACKGROUND INFORMATION

_____ 1. Review with your business contact the purpose of your visit. Explain that you are trying to develop classroom examples of how academic concepts (math, science, English/communications, etc.) are used in the "real world." Briefly describe WHY you feel this is important to students and to their future career and educational goals.

_____ 2. Explain that all you need from the business person is for him/her to describe how someone in a specific mid-level technology* position uses the academic concept in a job-related assignment. (Remind your contact that you will be developing the classroom materials, you just need his/her help to: 1) identify the job-related task that involves math, science, English, etc. and 2) provide you with any written material the person uses to perform the task.)

_____ 3. Explain that you also want to include two other kinds of information in the material you will be developing: 1) information on the company and 2) information on the job or career that the application is derived from. (It's VERY important that our students learn more about their communities and the types of careers available through local employers!)

SECTION III - RESEARCH

_____ 4. Ask your contact person to describe one or more tasks performed by mid-level employees that involve the academic concept(s) you are targeting. (Try to be as specific as possible—e.g., tasks that involve algebra, tasks that involve persuasive writing, etc.)

* Mid-level technology positions are those that require some high school vocational training up to and including an occupational Associate Degree, either to enter the job field or to qualify for advancement (i.e., the types of positions that require education LESS THAN a Bachelor's Degree.)

_____ 5. While you are discussing the tasks with your contact person, be sure to ask for:

_____ the position title of the employee who performs this task and the education/ skills required or preferred

_____ the forms, documents or other supporting materials used by the employee in completing the task (and if you may have copies of these materials to include in your classroom example).

_____ (if appropriate) whether or not you may have some sample data to help you reconstruct the task in a realistic way for students

SECTION IV - CONCLUSION

_____ 6. Ask for any written material that describes the company.

_____ 7. Ask for any written material that describes the career opportunities available with that company. (NOTE: Larger companies often have brochures describing their career opportunities. If your company does not, ask for a job description and salary information for the specific positions related to your task analysis.)

_____ 8. Ask whether or not there are any restrictions on reproducing any or all of the materials you've received. (Some companies would prefer you omit their names or not use their logos.) Explain that you are developing the material for use in YOUR classroom, but that the material may be shared with other teachers on a local, regional or even national basis.

_____ 9. Remind your contact person that you will be adapting the task information for classroom use and that some modifications may be needed to "tone down" the example for students who are inexperienced.

_____ 10. Describe the next steps in the process and that you will send a draft of your material for his/her review. (You want to be sure the company is comfortable with the information being presented and that their preferences have been followed regarding company materials.)

_____ 11. Ask the contact person if it's acceptable to list his/her name and position as having contributed to the development of the classroom material.

_____ 12. Show the contact person a completed example from the PACE Office, if appropriate, and explain how your finished product material may be similar or different.

APPENDIX D

MATHEMATICS FOR THE WORKPLACE

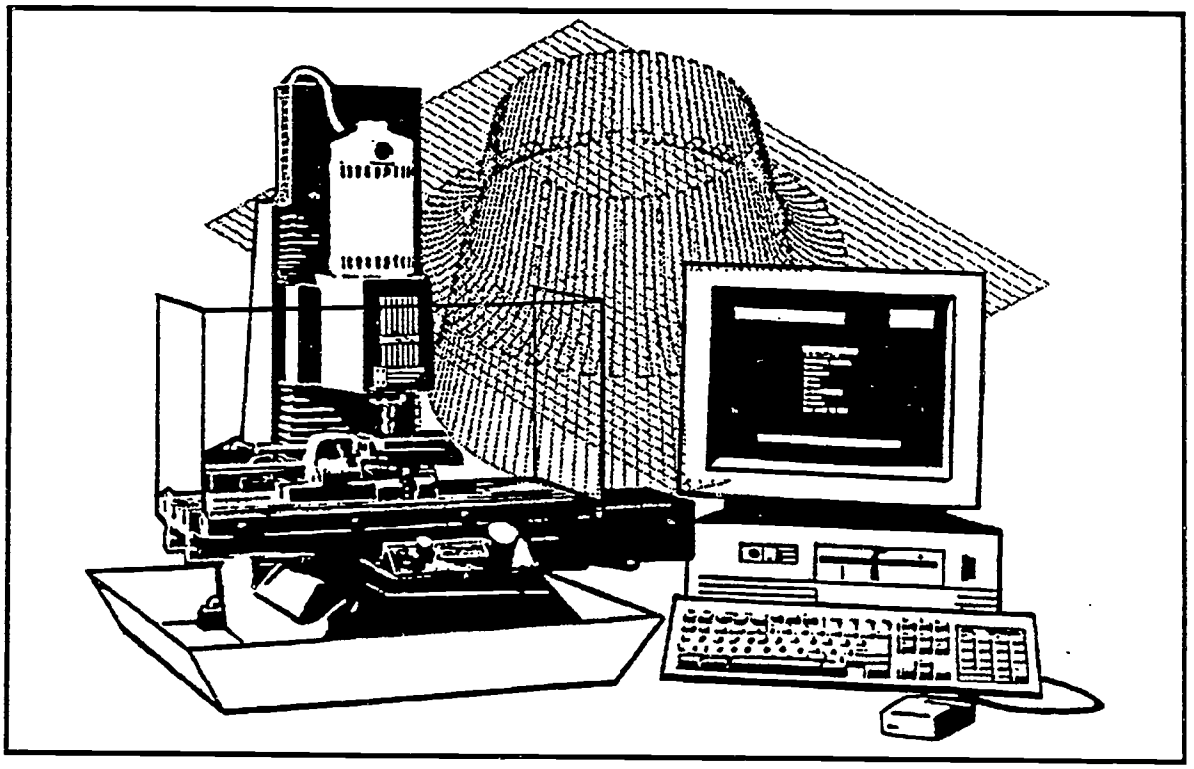

APPLICATIONS FROM MACHINE TOOL TECHNOLOGY

(MICHELIN TIRE CORPORATION)

A TEACHER'S GUIDE

Developed by:

Mr. Johnny M. Wallace and Mr. Grover Stewart

Associate Director / Curriculum Developer
Partnership for Academic and Career Education

Human Resources Manager
Michelin Tire Corporation

(September, 1991)

Partnership for Academic and Career Education (PACE)
P. O. Box 587
Pendleton, SC 29670
(803-646-8361, ext. 2247)

The PACE office wishes to express special thanks to the following individuals for their contributions to this module:

Kathleen McAlhaney, Mathematics Instructor, Pendleton High School

Anita Turlington, English Instructor, Tri-County Technical College

Curt McKinney, Department Head, Machine Tool Technology, Tri-County Technical College

Joe Stearns, Mathematics Instructor, Tri-County Technical College

TABLE OF CONTENTS

INTRODUCTION

The workplace of tomorrow will require a skills level beyond the twelfth grade. Technological advances have necessitated higher levels of mathematical skills for employees to function efficiently in the workplace. Many employers need workers who can think creatively and use a variety of approaches to problem solving.

Because of the higher levels of mathematical skills needed to succeed in the workplace, now more than ever, there needs to be greater relevance between what is taught in the classroom and what transpires in the real world on a daily basis. Teaching skills in an isolated setting does little to motivate many students to take their academic studies seriously.

When information is presented in an isolated setting, students who are unable to see a connection between what is taught in the classroom and real-world applications may become disinterested in the subject. Consequently, students perceive no need to apply themselves to their studies and may not take courses which challenge them as learners.

Examples from real-life settings often help students better understand the need to study and learn mathematical skills taught in the classroom. Real-life applications can provide the needed relevance to motivate students, not only to apply themselves to their studies, but also to take the highest level of mathematics they are capable of handling successfully. ***Mathematics for the Workplace: Applications from Machine Tool Technology*** is designed to present a real-world context wherein mathematics skills (geometry and trigonometry) are used as part of a daily routine. An additional purpose is to help students develop the ability to accurately analyze diagrams in order to make mathematical computations.

This module, featuring applications from the Michelin Corporation, is designed for inclusion in the Tech Prep curriculum offered at the secondary level. Tech Prep programs of study provide students with the opportunity to learn more than just academic concepts. These programs combine academic and vocational studies with career understanding to give students the opportunity to take full advantage of all options available during high school and after graduation.

HOW TO USE THIS MODULE

The table of contents lists the sections contained in the module. This is a teacher's guide, not a packet of materials designed entirely to be duplicated and presented to students. ***There are, however, several sections which need to be duplicated and given to students so they can complete the assigned tasks.***

Pages 3-8 give students an introduction to the career field of machine tool technology. Included in this section is such information as a description of the careers available in the field, job-related duties, working conditions, high school preparation and other special opportunities. This section also includes some general information about the Michelin Corporation. **These pages should be duplicated and given to students as introductory information.**

Pages 9-13 present a job-related task. In this section, students are given an explanation of the task and information to help them understand the need for the task. This section also provides teachers with an understanding of the requirements to complete the task. **This section can be duplicated and given to students as information.**

Pages 14-18 give ***RELATED PROBLEMS*** to be solved by students once the appropriate concepts have been covered in class. **These pages should be duplicated and given to students.**

Pages 19-29 are the answer keys to the ***RELATED PROBLEMS.***

Appendix A contains sample job ads from local newspapers for industries wishing to hire individuals with machining experience. Also included are questions which can be used to create interest in the module. (These questions are designed for general class discussion, not an an individual assignment.)

Appendix B contains career information about machinists, machine operators, and mechanical and electronics technicians who are employed by Michelin. **These pages can be duplicated and given to students as information.**

Examining The Career Field: *Machine Tool Technology*

Machine tool technicians set up, operate and maintain machinery used in the production of such items as aircraft, construction equipment, industrial machinery, soft-drink containers, durable and nondurable goods and artifical heart valves. Machine tool technicians can specialize in related areas. Examples of specialized machine tool technicians include the following:

- **machinists** who produce metal goods that are made in numbers too small to produce with automated machinery;
- **maintenance mechanics** who trouble-shoot mechanical, pneumatic or hydraulic problems on production machines and assembly-line equipment in order to make repairs;
- **numerical control machine tool operators** who set up and operate multi-purpose numerical control machines to perform a wide array of machining operations;
- **tool and die makers** who fabricate simple and complex machine tools, as well as jigs, fixtures, and precision gauges; and
- **set-up technicians** who set up, maintain and perform minor repair of production machinery and assembly lines in order to produce a quality product.

Other areas of specialization may include robotics, laser cutting machines, electro-chemical machines, and injection molding (plastics) machines.

Duties of Technicians

The range of duties performed by machine tool technicians may vary depending upon the specialty area in which they work. However, general duties performed by all technicians include

- analyzing blueprints, schematic drawings and other specification sheets to determine required procedures and materials;
- verifying dimension, precision, and conformity of final products;
- monitoring machines to ensure that the rate of feed and speed and amount of lubricant and coolant are properly maintained; and
- measuring, marking and positioning the stock (metal or other material) on the machine tool.

Working Conditions

Most technicians work in shops or industries that are well-lighted and ventilated. Because of hazards within the work area, technicians must wear safety glasses and earplugs. Machining work requires stamina because operators are on their feet for most of the work day.

Most machining technicians work a 40-hour week. Technicians may work one of three shifts--day, evening or night. Overtime work may be required during periods of high manufacturing activities.

High School Preparation

In order to be best prepared for a program of studies in machine tool technology, students in high school should take courses including algebra, geometry, physics for the technologies, industrial technology, computer science and trigonometry. Occupational related courses such as blueprint reading, mechanical drawing and machine tool operations will provide a base of technical skills for persons entering technician careers.

Students who take machine tool operations (machine shop) courses in high school may qualify for advanced placement at a technical college. Technical Advanced Placement (TAP) is a special part of the Tech Prep program which enables qualified high school students to earn Tri-County Technical College credit. [TAP is the term applied to advanced placement at Tri-County Technical College; other local two-year colleges have a similar version of TAP.]

The purpose of TAP is to

--reduce overlapping between high school and college programs; and

--enable students who do well in high school/career center courses to save time, money and/or to carry lighter course loads in their first term of studies at Tri-County Technical College.

Students who are interested in learning more about TAP opportunities at Tri-County Technical College or similar programs offered through other area technical colleges should contact their high school or career center counselor.

Special Opportunities

Students wishing to gain experience in the machining industry while enrolled in high school can often do so through cooperative (co-op) educational programs. Co-op is a program that provides students with an opportunity to integrate classroom study with planned and supervised work experience. This experience allows the student to learn skills in the classroom and laboratory and then put those skills into practice on the job with a sponsoring company. In a co-op program, the sponsoring company usually provides approximately 20 hours per week of relevant work experience for the student. The student also attends regularly scheduled, curriculum-related classes.

Another opportunity whereby individuals can gain work-related experience while enrolled in postsecondary educational studies is through apprenticeship programs. In apprenticeship programs, students usually work from 17-25 hours per week while completing coursework toward an associate degree. The industry sponsoring the apprenticeship program usually pays the total costs associated with earning the degree.

Two special opportunities in Anderson, Oconee and Pickens counties which allow participants to gain experience while enrolled in postsecondary educational programs are the Bosch Apprenticeship Program and the Oconee Industries Partnership Program. A brief explanation of each program follows.

Bosch Apprenticeship Program

The Bosch Apprenticeship Program, a three-year apprentice program, provides training for machine tool technology areas such as toolmaker, maintenance mechanic and set-up technician. During the first two years of the program, training hours are divided among the classroom, lab, and apprentice shop. Upon successful completion of the second year, students receive an Associate in Industrial Technology degree from Tri-County Technical College. During the third year, apprentices receive specialized classroom, lab, shop and on-the-job training. Upon successful completion of the third year, students graduate from the program as journeymen craftsmen.

Oconee Industries Partnership Program

The Oconee Industries Partnership Program is designed to attract qualified applicants into one of the largest growing areas in Oconee County--metalworking. The two-year program involves training hours divided among classroom, lab and on-the-job work experience. Upon successful completion of the program, students receive an Associate in Industrial Technology degree, with a major in Machine Tool Technology, from Tri-County Technical College. Students attend classes and lab at Tri-County Technical College during the morning hours and work on site with the sponsoring company during the afternoon. This program is open to any qualified student in Anderson, Oconee and Pickens counties as well as Georgia and other neighboring areas.

Postsecondary Educational Opportunities

Most employers prefer to hire technicians with technical training or college courses. Some positions may require specialized or on-the-job training.

Machine Tool Technology programs are offered at the following area two-year colleges. If you would like additional information about the Machine Tool Technology program at one of these colleges, you should contact the person listed under each college.

Greenville Technical College
Charles G. Wilson
Department Head
Machine Tool Technology
P. 0. Box 5616
Station B
Greenville, SC 29606-5616
803-250-8109

Piedmont Technical College
Michael Reid
Department Head
Engineering Technologies
P. 0. Drawer 1467
Greenwood, SC 29648-1467
1-800-868-5528

Spartanburg Technical College
Charles W. Shaw
Department Head
Machine Tool Technology
P. 0. Drawer 4386
Spartanburg, SC 29305
803-591-3600

Tri-County Technical College
Curt McKinney
Department Head
Machine Tool Technology
P. 0. Box 587
Pendleton, SC 29670
803-646-8361, ext. 2272

Earnings and Advancements

In South Carolina during 1989-90, machine tool technicians earned between $13,957 and $36,504, depending upon the type of specialty area they were employed in. Computer numeric control tool operators earned between $14,851 and $26,354; machinists earned between $13,957 and $36,504; tool and die makers earned between $20,613 and $30,160. Graduates of Tri-County Technical College's Machine Tool Technology program in 1990 reported salaries ranging from $14,000 to $30,000. Additional income can be earned through overtime hours.

Technicians advance as they gain on-the-job experience and additional specialized training. Some move into supervisory and administrative positions within their firms while others may open their own machining shops.

Employment Outlook

Over all, the employment outlook for machine tool technicians calls for an increase in the job opporotunities to the year 2000. All areas of specialization should see a growth in the number of workers. The growth in some areas of specialization will increase faster than other areas.

Advancements in equipment and automation within the workplace may require many technicians to gain a much broader background in machine operations, blueprint reading, mathematics and the properties of metals and plastics.

ABOUT MICHELIN TIRE CORPORATION

Michelin, an international group of corporations, is more than just another tire company. Worldwide, Michelin employs more than 100,000 people. The company is dedicated to the disciplines of science and research, manufacturing and marketing.

Michelin people are not driven by the clock, or by the watchful eye of a supervisor, but by their own sense of achievement. Employees are encouraged to follow their interests into other fields. At Michelin, personal development is considered to be in the long-term interest of the individual as well as the corporation.

But what does Michelin look for in employees? Michelin looks for people who want to create their careers with the company. The company is committed to building careers and developing people according to their skills and interests.

Michelin has over 54 manufacturing locations in Canada, Europe, the Far East, South America and the United States. Because Michelin is international in scope, the possibilities of lifestyles are limitless: from the adventure of a metropolitan city to the family life of a close-knit community. In the United States, three of the four Michelin plants are located in South Carolina, with all three plants located in upstate counties: Anderson, Greenville and Spartanburg.

Personnel from the Michelin plant located in Sandy Springs, South Carolina were very instrumental in the development of this module. The commitment which Michelin has to educating its present and future workforce is shown by its willingness to share examples of how mathematical skills are used at the plant.

INTRODUCING THE LESSON

One suggestion for introducing this module would be to invite a machine tool technician to come and speak to the class. (The Guide to Area Business Speakers, published by the PACE consortium, is an excellent source for identifying speakers.) By listening to a machine tool technician, students gain first-hand knowledge about the characteristics of the workplace, job duties and requirements and other job-related specifics. (NOTE: Since this module uses applications from Michelin, the teacher might want to make an initial contact with Michelin about inviting a speaker. At Michelin, contact Mr. Grover Stewart at 260-2651.)

After the technician has spoken to the class, the job ads and questions in **Appendix A** can be used to generate discussion about machine tool technicians and requirements for the career. Students can be given the sample problem to work as a class assignment. After seeing an example of a problem to be solved by a technician, the **Related Problems** can be assigned as homework or as additional problems during the class.

The **Related Problems** are diagrams which require technicians to compute a missing dimension. These diagrams should be given to students to complete. A suggested activity for completing the exercises is to have students work together as a team. This activity will give students the opportunity to build team-working/communication skills as well as learning the mathematical concepts.

Additional activities that can be conducted may include a field trip to the local technical college or career center to visit machine tool technology programs; viewing career videos about machining (the PACE Office has several videos which can be loaned to teachers; call the office at 646-8361, 225-2250, 882-4412 or 859-7033, ext. 2107 to check out the videos) or conducting cooperative projects or joint lab activities with an occupational class.

INTRODUCTION TO THE TASK

One task of a machine tool technician is to fabricate machines or parts of machines to be used in the manufacturing process within industry. The piece to be produced may be a replacement for a part that has been broken during the manufacturing process. Oftentimes when parts break, a critical dimension may be missing. The technician may have to use the blueprint to determine the missing dimension.

Sometimes the blueprint will not have all the dimensions of the various components indicated on the drawing. If any dimensions are missing, the technician will have to calculate the missing dimensions before producing the part.

On the next page is a cross-sectional drawing of a large cylinder containing four smaller cylinders inside. If one of the smallest cylinders becomes worn and must be replaced, the technician may have to use the blueprint drawing to determine the diameter of the cylinder. Using the information given, calculate the diameter of the smallest cylinder.

NAME: _____ DATE: _____

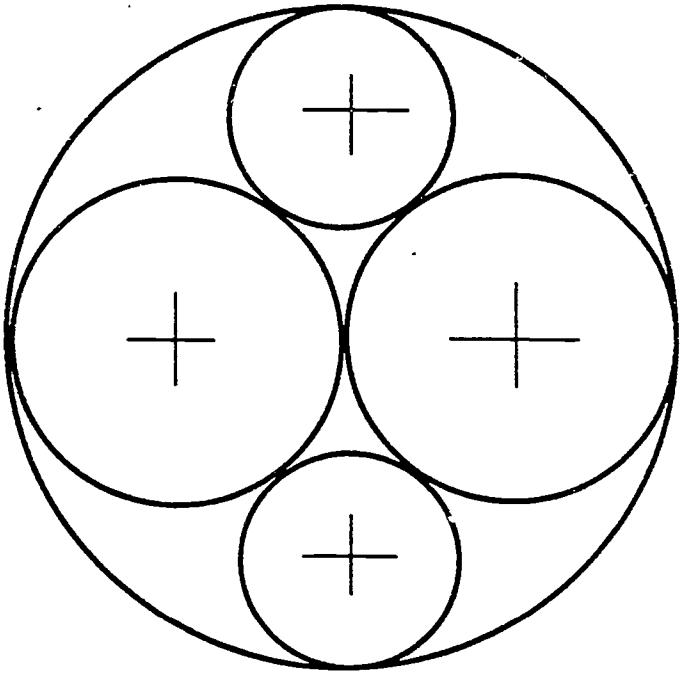

The diameter of the large containment cylinder is 30. The diameter of the middle-sized cylinder is 15. What is the diameter of the smallest cylinder? (Not drawn to scale.)

MICHELIN TIRE CORP.
MANUFACTURING DIVISION

DOSSIER NO. _____

In order to compute the diameter of the smallest cylinder, basic geometry concepts and the Pythagorean theorem must be used.

From the information given, we see that the radius of the containment cylinder is 15, the radius of the middle-sized cylinder is 7.5, and the radius of the smallest cylinder is ***'r'***. (Remember Diameter = 2 X Radius)

We can construct a right triangle in the center of the containment cylinder using the above information. We can then calculate the length of each side of the triangle using the Pythagorean Theorem. **(See Diagram Below.)**

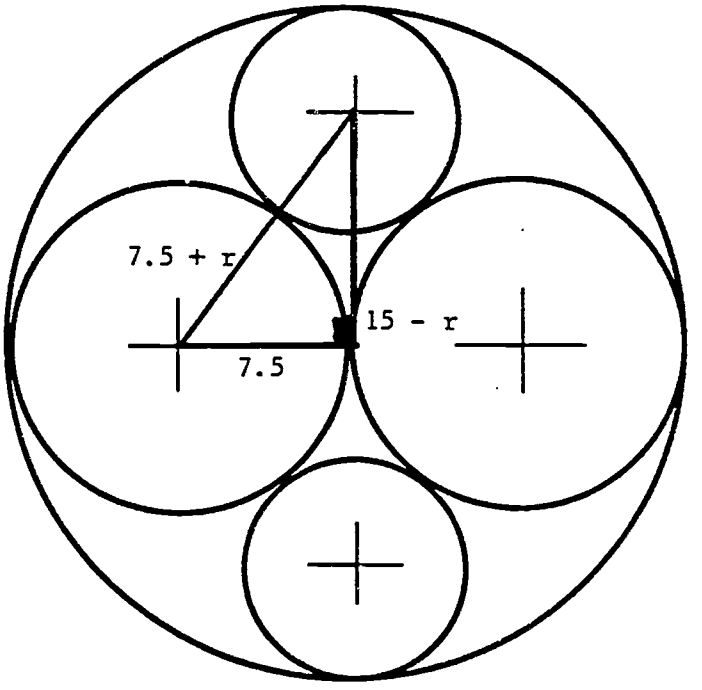

The length of the hypotenuse is the sum of the radius of the middle-sized cylinder, 15, and the radius of the smallest cylinder *'r'*, or

length of the hypotenuse = 7.5 + r.

The length of the short leg of the triangle is the same as the length of the radius of the middle-sized cylinder or 7.5.

The length of the longer leg of the triangle is the radius of the containment cylinder, 15, minus the radius of the smallest cylinder, *'r'*, or

length of the longer leg = 15 - r.

Since we have a right triangle, the Pythagorean theorem can be used to compute *'r'*.

Using the Pythagorean theorem gives $(7.5 + r)^2 = (15 - r)^2 + (7.5)^2$.

Squaring both sides of the equation gives $56.25 + 15r + r^2 = 225 - 30r + r^2 + 56.25$.

Simplifying the right side gives $56.25 + 15r + r^2 = 281.25 - 30r + r^2$.

Combining likes terms gives $45r = 225$.

Solving for r gives $r = 5$.

The radius of the smallest cylinder is 5. The diameter is two times the radius or 10.

NAME: _____ DATE: _____

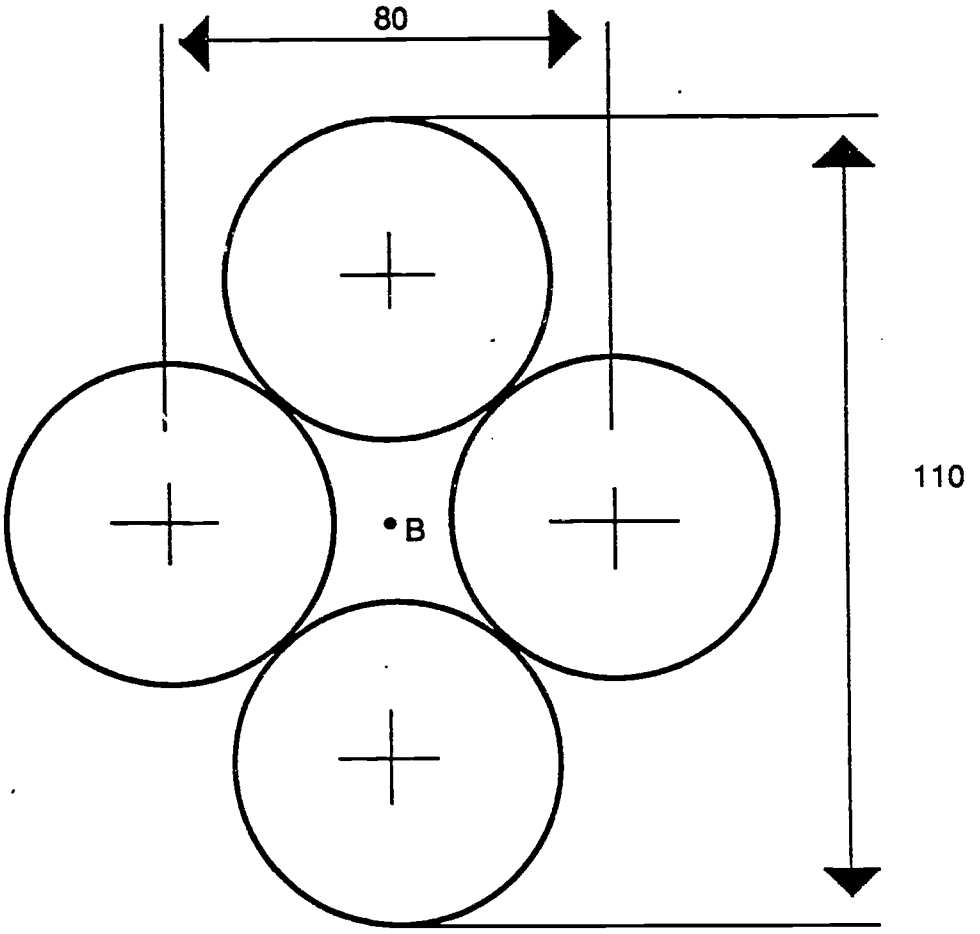

Given that the pins are all the same size, find the diameter of the pins. (Point B is the horizontal and vertical midpoint.)

MICHELIN TIRE CORP.
MANUFACTURING DIVISION

DOSSIER NO. _____

NAME: _____ DATE: _____

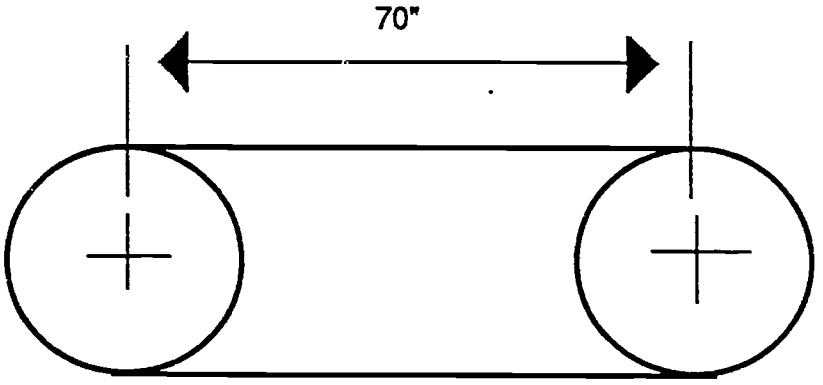

If the diameter of the rollers is 5", what is the total length of the belt?

MICHELIN TIRE CORP.
MANUFACTURING DIVISION

DOSSIER NO. _____

NAME: _____ DATE: _____

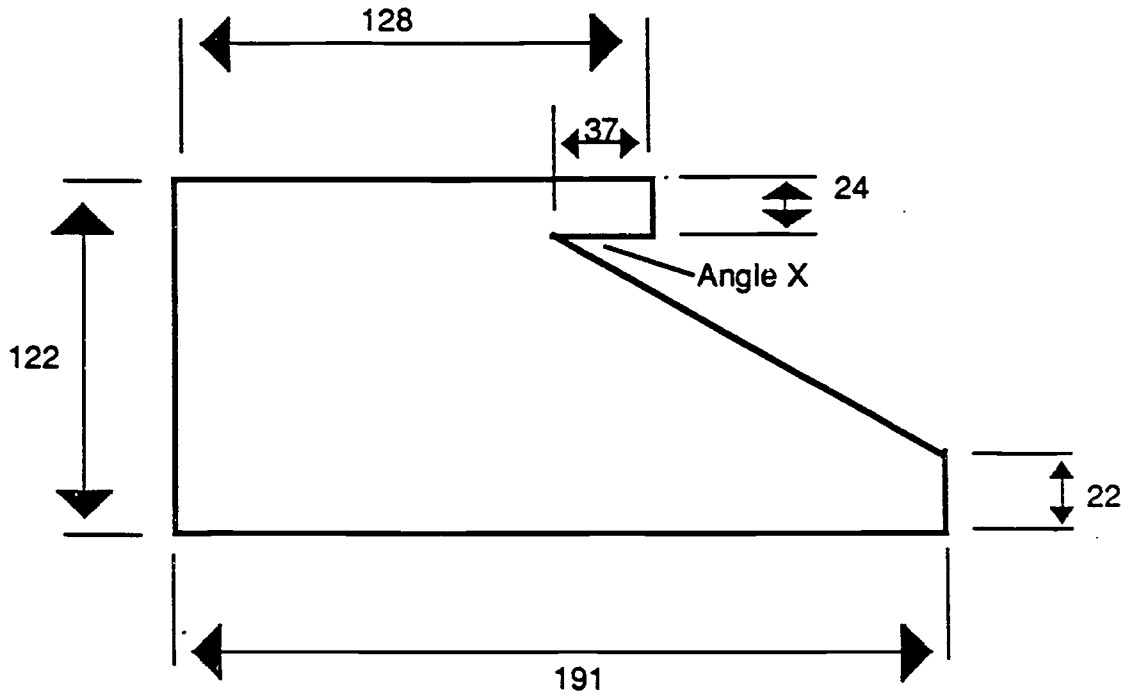

Using the information given in the diagram, compute the measure of Angle X.

MICHELIN TIRE CORP.
MANUFACTURING DIVISION

DOSSIER NO. 65

NAME: _____ DATE: _____

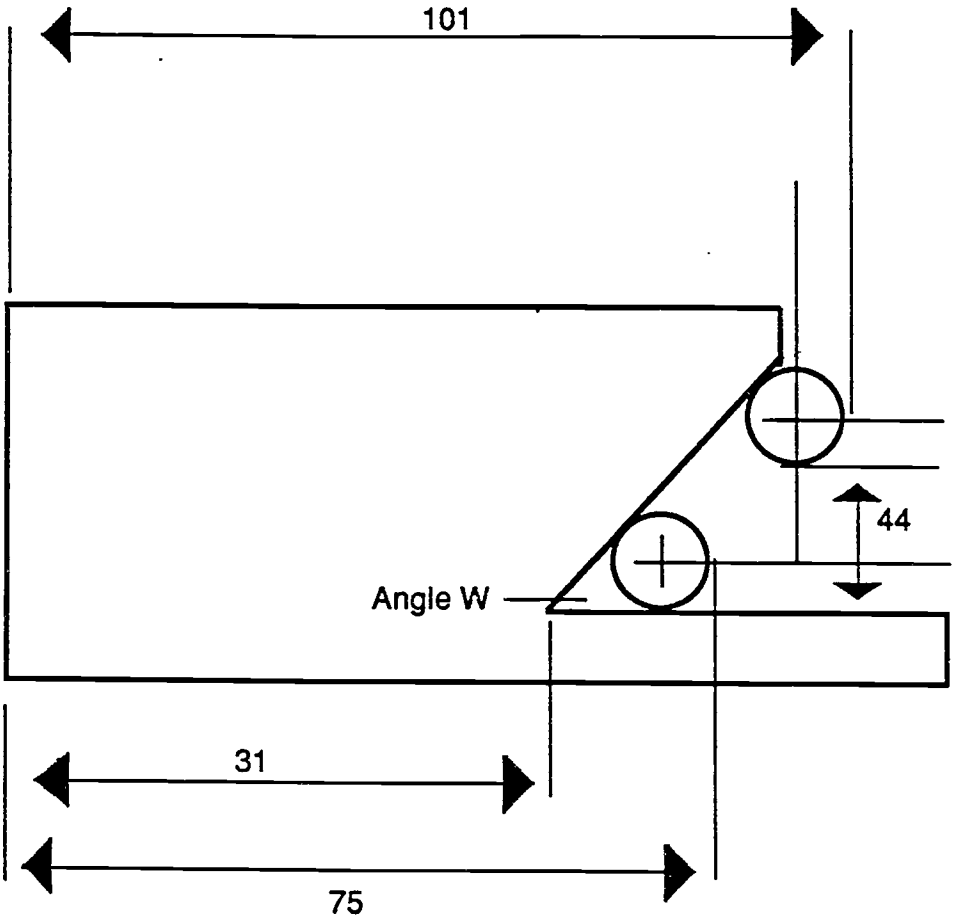

Using the information given in the diagram, compute the measure of Angle W.

MICHELIN TIRE CORP.
MANUFACTURING DIVISION

DOSSIER NO. _____

NAME: _____ DATE: _____

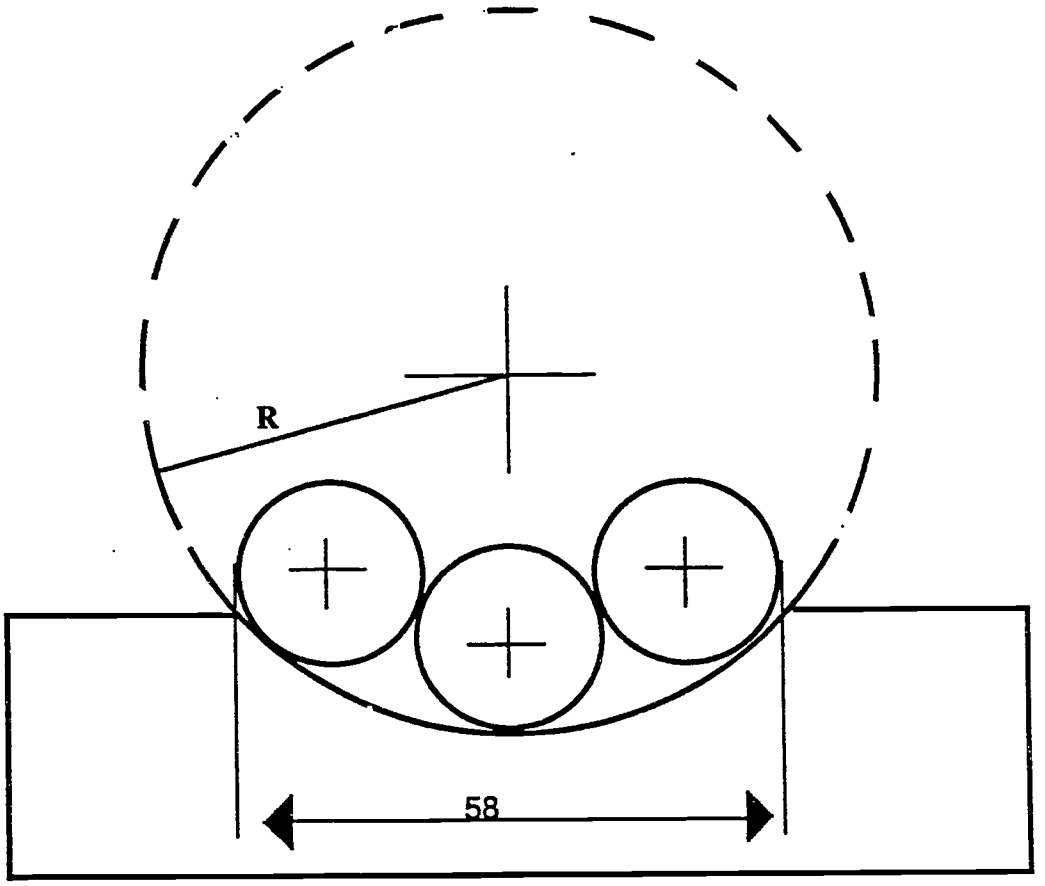

If the length of the diameter of the smaller cylinders is 20, what is the radius 'R'?

ANSWER KEY
RELATED PROBLEM 1

In order to determine the diameter of each pin, a right triangle must be constructed. **(See Diagram Below).**

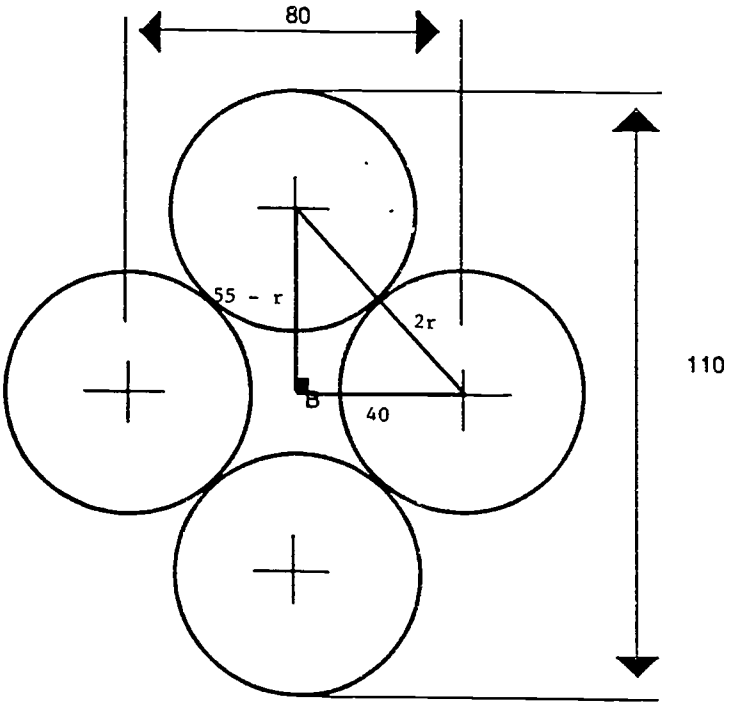

From the information given, we can conclude that the distance from point B to point C is one-half of 80 or 40. Therefore, the length of side BC is 40.

The distance from point B, through point A, to the top of the circle is one-half of 110 or 55. The radius of the pins is *'r'*. The distance from point B to point A is 55 - r. Therefore, the length of side AB is 55-r.

The distance from point A to point C is the sum of the radius for each circle or 2r.

By using the Pythagorean Theorem, we can set up an equation and solve for *'r'*.

Substituting into the Pythagorean Theorem we get $(2r)^2 = (40)^2 + (55-r)^2$.

Squaring both sides we get $4r^2 = 1600 + 3025 - 110r + r^2$.

Combining like terms gives $4r^2 = 4625 - 110r + r^2$.

Setting the equation equal zero gives $3r^2 + 110r - 4625 = 0$.

Solving the equation can be accomplished using the quadratic formula or factoring.

QUADRATIC FORMULA

$$\frac{-b \pm \sqrt{b^2 - 4ac}}{2a}; \qquad a = 3; \quad b = 110; \qquad c = -4625$$

$$\frac{-110 \pm \sqrt{110^2 - 4 \times 3 \times -4625}}{2 \times 3}$$

$$\frac{-110 \pm \sqrt{12100 + 55500}}{6}$$

$$\frac{-110 \pm \sqrt{67600}}{6}$$

$$\frac{-110 \pm 260}{6}$$

$$\frac{-110 + 260}{6} \qquad \frac{-110 - 260}{6}$$

$$\frac{150}{6} = 25 \qquad \frac{-370}{6} = -61.667$$

The only valid answer for the radius is 25. Therefore the diameter is 50.

FACTORING

$$3r^2 + 110r - 4625 = 0$$

$$(3r + 185)(r - 25) = 0$$

$$3r + 185 = 0 \qquad r - 25 = 0$$

$$3r = -185 \qquad r = 25$$

$$r = -61.667$$

The only valid answer for the radius is 25. Therefore, the diameter is 50.

ANSWER KEY
RELATED PROBLEM 2

In order to compute the length of the belt, the problem must be broken into two parts: computing the linear length between the roller and then computing the length of portion around the rollers.

The length of the linear portion is 2 x 70" or 140".

The length of the portion around the rollers is found by computing the circumference of one of the rollers. (The portion around the rollers would be one-half of the circumference of both rollers or just the circumference of one roller.)

The formula for circumference of a circle is π x D.

Substituting into the formula we get

3.14 x 5" or 15.7" as the length of the circular portion.

The length of the belt is the sum of the length of the linear portion (140") plus the length of the circular portion (15.7") or 155.7".

ANSWER KEY
RELATED PROBLEM 3

By drawing a perpendicular line joining the sides of Angle X and labeling the angles as A, B, and C, we can form a right triangle. **(See Diagram Below.)**

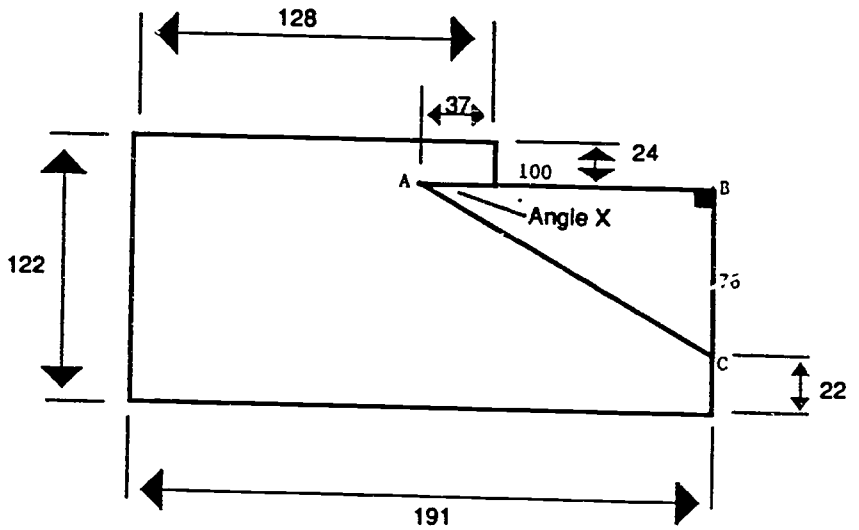

We know that Angle X and Angle A are the same measure. Therefore, by determining the measure of Angle A, we will know the measure of Angle X.

The tangent of Angle A is defined as the side opposite Angle A divided by the side adjacent to angle A or

$$\text{TAN A} = \frac{BC}{AB.}$$

The length of BC is 122 - 22 - 24 or 76.

The length of AB is 191 - (128 - 37) or 100.

Substituting into the formula we get

$$\text{TAN A} = \frac{BC}{AB} = \frac{76}{100} \text{ or } .76.$$

Using the inverse tangent function of a scientific calculator, we find the measure of Angle A as 37° 14' or

$$\text{TAN}^{-1}(.76) = 37.235° = 37° 14'.$$

If students do not have access to a scientifc calculator, the interpolation process must be used to compute TAN A to the nearest minute.

Using a table of trig functions, we find the angle with a tangent of .76 lies between 37° 10' (tangent of .7581) and 37° 20' (tangent of .7627).

Using interpolation we get

	37° 10'			.7581		
x			.0019			
	A	10'		.7600		.0046
	37° 20'			.7627		

Setting up a proportion we get

$$\frac{x}{10} = \frac{.0019}{.0046.}$$

Cross multiplication gives $.0046x = .019.$

Solving for **x** gives $x = \frac{.019}{.0046}$ or $x = 4.$

Therefore, the measure of Angle A, to the nearest minute, is 37° 14'.

ANSWER KEY
RELATED PROBLEM 4

By extending the radius of circle B and then drawing a line from the center of circle A perpendicular to the extended radius of circle B, a right triangle is formed. The angles of the triangle can be labeled A, B and C. **(See Diagram Below.)**

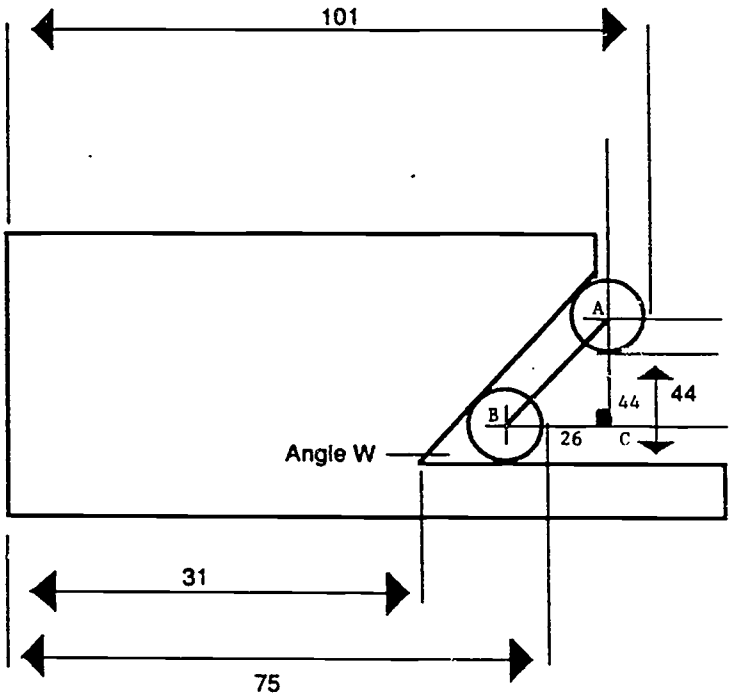

By recalling rules regarding parallel lines cut by a transversal, we can determine that Angle W is equal to Angle B. Therefore, by computing the measure of Angle B we will know the measure of angle W.

The tangent of Angle B is defined as side opposite divided by side adjacent or

$$\text{TAN B} = \frac{AC}{BC.}$$

The length of BC is 101 - 75 or 26. The length of AC is 44. Substituting into the formula we get

$$\text{TAN B} = \frac{44}{26} \qquad \text{or} \qquad \text{TAN B} = 1.692.$$

Using the inverse tangent function of a scientific calculator, we find the measure of Angle B as 59° 25' or

$$B = \text{TAN}^{-1}(1.692) = 59.421° = 59° 25'.$$

Using a table of trig functions, we find the angle with a tangent of 1.692 lies between 59° 20' and (tangent of 1.686) and 59° 30' (tangent of 1.698).

Using interpolation we get

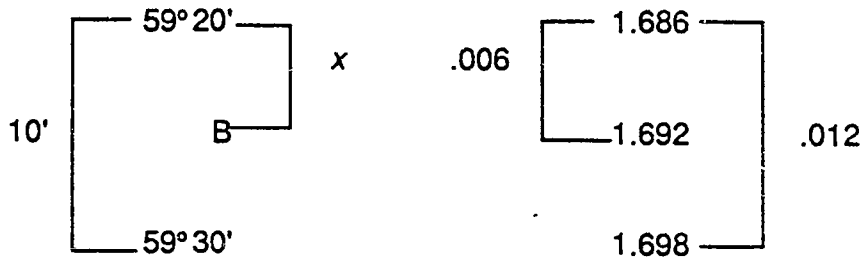

Setting up a proportion we get

$$\frac{x}{10} = \frac{.006}{.012.}$$

Cross multiplication gives $.012x = .06.$

Solving for **x** gives $x = \frac{.06}{.012}$ or $x = 5.$

Therefore, the measure of Angle B to the nearest minute is 59° 25'.

ANSWER KEY
RELATED PROBLEM 5

Computing the radius of the large circle will require drawing a triangle using the centers of the large circle and two of the smaller circles as vertices. Once the large triangle has been drawn, a smaller, right triangle can be drawn by picking a point perpendicular to point B and parallel to point C and drawing a segment. **(See Diagram Below.)**

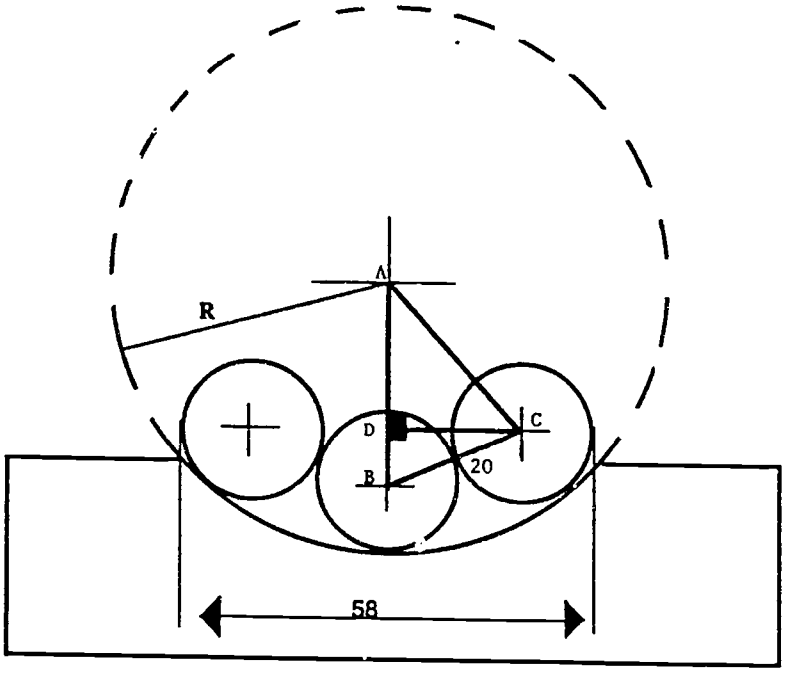

After constructing the two triangles, it can be seen that in order to determine the length **'R'**, we must know the length of segment AC and the length of the radius of the smaller circle. The length of the radius of the smaller circle is 10. (The diameter of the smaller circle, 20, was given in the original problem.) In order to compute the length of AC, we must first determine the length of side DC and the measure of Angle A. Once these measures are known, trigonometric ratios can be used to compute the length of AC.

By examining the smaller triangle, we see that the length of BC is 20, or twice the radius of the smaller circle.

The distance from point D through point C to the outside of the pin is 29 (one-half of 58.) (A diameter that is perpendicular to a chord bisects the chord.) Since the radius of the smaller circle is 10, the length of DC is 29 - 10 or 19.

Now that we know the lengths of BC and DC, we can use trigonometric ratios to compute the measure of Angle B.

$$\text{SIN B} = \frac{\text{opposite}}{\text{hypotenuse}} \quad \text{or} \quad \frac{19}{20} \quad \text{or } .95.$$

Using the inverse sine function of a scientific calculator, we find that the measure of Angle B is 71° 48' or

$$B = \text{SIN}^{-1}(.95) = 71.805° = 71° \, 48'.$$

However, if students do not have access to a scientific calculator, the interpolation process can be used to compute SIN B to the nearest minute.

Using a table of trig functions, we find that the angle with a sine of .95 lies between 71° 41' (sine of .9492) and 71° 50' (sine of .9502).

Using interpolation we get

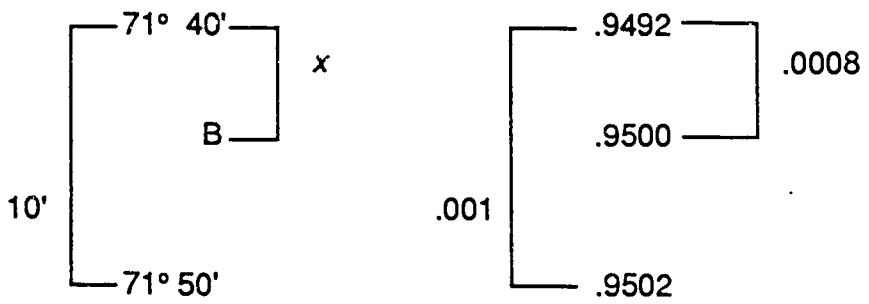

Setting up a proportion we get

$$\frac{x}{10} = \frac{.0008}{.001.}$$

Cross multiplication gives $.001x = .008.$

Solving for **x** gives $x = \frac{.008}{.001}$ or $x = 8.$

Therefore, the measure of Angle B, to the nearest minute, is 71° 48'.

Triangle ADC is a right triangle. If we know the measure of one angle and the length of one side, we can compute any missing side or angle.

If we look closely at Triangle ABC, we can see that it is an isosceles triangle. Therefore, the measure of Angle C is the same as the measure of Angle B or 71° 48'. The measure of Angle A is 180° minus the sum of Angles B and C or

$$\begin{aligned} \text{Angle A} &= 180° - (71° 48' + 71° 48') \\ &= 180° - 143° 36' \\ &= 36° 24'. \end{aligned}$$

From the previous calculation, we know the length of DC is 19. Since we know the measure of Angle A (36° 24') and the length of DC (19), we can use the sine function to compute the length of side AC.

$$\text{SIN A} = \frac{DC}{AC}$$

$$\text{SIN } 36° 24' = \frac{19}{AC}$$

$$.5934 = \frac{19}{AC}$$

Solving for AC gives $.5934 \times AC = 19.$

$$AC = \frac{19}{.5934}$$

$$AC = 32.019.$$

Since radius 'R' is the sum of AC (32.019) and the length of a radius of a smaller circle (10), **the length of radius 'R' is 42.019.**

Computing the Sine of 36° 24'.

If students do not have access to a scientific calculator, the interpolation process must be used to compute the sine of Angle A.

An angle with a measure of 36° 24' lies between 36° 20' (sine of .5925) and 36° 30' (sine of .5948).

Using interpolation we get

	36° 20'	4	x	.5925	
	36° 24'			A	.0023
10	36° 30'			.5948	

Setting up a proportion we get

$$\frac{4}{10} = \frac{x}{.0023.}$$

Cross multiplication gives $10x = .0092$

Solving for **x** gives $x = \frac{.0092}{10}$ or x .0009.

Therefore, the sine of an angle measuring 36° 24' is .5934.

APPENDIX A

SAMPLE JOB ADS

Careers For Machinists And Machine Operators

Michelin Tire Corporation's opportunities offer superior advantages to people who want to use their talents and get ahead. Our sophisticated manufacturing operation provides tremendous challenge and many benefits

MACHINISTS

Applicants should have at least 2 years experience as a machinist or training in the military or at a technical school. Sound knowledge of machining technology/practices is required as well as the ability to read blueprints and use math from basic arithmetic through algebra and trigonometry.

Assignment to the Central Machining Group involves the set-up and operation of lathes and mills in a job shop environment Applying blueprint analysis skills and math skills, Michelin machinists produce high quality parts made to precise tolerances with minimal supervision.

MACHINE OPERATORS

Applicants should have at least 2 years experience as a machine operator or training in the military or at a technical school General knowledge of machining technology/practices is required as well as the ability to read blueprints and apply basic and intermediate math

Assignment to the Production Machining Group involves the set-up and operation of machines to produce large quantities of similar parts Machinists in the production group at Michelin utilize math skills, blueprint analysis skills and sound machine shop practices to manufacture precision parts at an extremely efficient rate

Apply in confidence by sending your resume and salary history to: **Joe Ashworth, Dept. SPOT-27, Michelin Tire Corporation, P.O. Box 2846, Greenville, SC 29602.** An equal opportunity employer

MICHELIN
PUTTING CAREERS IN MOTION™

109034-16

WABCO

JOURNEYMAN
TOOL & DIE TECHNICIAN

5 - 7 years experience in manual & CNC machine tools could land you this job as a Journeyman Tool & Die Technician with this progressive state of the art manufacturing company.

This position requires experience in tool & cutter grinding, programming, as well as knowledge of machining practices and techniques. Must be knowledgeable in properties of various materials and have the ability to modify and alter tool designs, construct tools, jigs, fixtures, interpret part drawings, tool prints and sketches, and work to close tolerances (.0002). Must be willing to work a 2nd shift schedule (4-10 hour workdays).

WABCO operates a 4 year old manufacturing headquarters facility in Spartanburg, SC. A progressive employee relations environment includes a highly participative management philosophy, an all-salaried structure and flexitime. This solid fast moving organization provides challenge, recognition and opportunity for highly motivated people.

Send resume including salary history and requirements to:

WABCO
P.O. BOX 11
SPARTANBURG, SC 29304
Attn: Employees Relations Mgr.

EOE

STONE SAFETY CORPORATION, an equal opportunity employer is presently seeking an individual to fill the position of:

FABRICATOR

The successful candidate must be familiar w/all phases of fabrication, have the ability to read & work from blueprints & sketches, as well as use all fabrication equipment. Lathe & general machining exp required. High School education or GED req'd. Technical school preferred. 4-6 yrs. exp.

Stone Safety pays competitive salary w/exc. benefits. Please submit resume to:

STONE SAFETY CORP.
111 Southchase Blvd.
Fountain Inn, SC 29644
Attn: Human Resources

MECHANICAL SET-UP TECHNICIAN

- Two year Mechanical Degree plus two (2) years related machine repair experience or four (4) years related experience.
- Experience in ceramic production a plus.
- Demonstrated leadership experience dealing with associates
- Experience in blueprints, metrics, hydraulics/pneumatics, measuring techniques and SPC a must.
- Willing to train in Germany.
- German Language skills a plus.
- Printing experience a plus.

Send resume to:
Human Resources
ROBERT BOSCH CORP
PO Box 2867
Anderson, SC 29622
EOE M/F

SUPERVISING TOOLMAKER

Progressive, small co. in western NC requires a Supervising Toolmaker to start immediately. Candidate must have formal training & 5-10 yrs. exp. in mold making. Co. offers top pay & benefits in a modern, air conditioned facility CNC exp. helpful but will train. Send resume to Box K-H, News Piedmont, Greenville, SC 29607

Machinist

Seabrook, Division of Draper Corp., has immediate openings in the following production areas:

Mills
Drills
Lathes
CNC Machining Centers
Screw Machines
Grinders

Previous experience and the ability to read blueprints and micrometers required.
Seabrook is an equal opportunity employer with a competitive wage and benefit package including:

Medical
Life & Disability Insurance
401 K Retirement Plan
Paid Holidays and Vacation
Uniforms Furnished
Educational Aid
Payroll Savings & Credit Union

Interested persons should apply between 8:00am and 4:30pm Monday-Thursday.

Seabrook
Hwy. 29 North
Anderson, SC 29622

MACHINE OPERATORS

need 5 Machine Tool Operators to do set-ups, read mechanical drawings, micrometers, indepth gauges and familiar with metrics. Must be flexible and able to work all three shifts. Also, need 4 Milling Machine Operators with conventional knee & column experience. 1st shift.
Excellent fringe benefits and pay. Call Manpower for appt. 967-2672

CNC MACHINIST

A challenging and rewarding position is now open for a highly motivated individual with exceptional manufacturing abilities. Minimum requirements include a 2-year degree and at least two years of machine shop experience including precision tooling and CNC programming. Doty Scientific is a high-tech manufacturing and R&D company on the northeast side of Columbia with an outstanding eight-year growth record. Competitive salary and benefits commensurate with abilities and experience. Send resume and transcripts to: Debra Chambers, Doty Scientific, Inc., 600 Clemson Rd., Columbia, SC 29223

MACHINIST

Prototype Shop will pay up to $14/hr. for top machinists with start-to-finish capabilities holding close tolerances. CNC and Machine Operators need not apply. Paid insurance, vacation & holidays. Call 845-3529 for interview

MACHINISTS MECHANICS

BIC Corporation, a leading manufacturer of consumer disposable products (writing instruments, lighters, shavers) has established a manufacturing facility in the greater SPARTANBURG area and has immediate needs for MACHINIST/MECHANICS to join its operation.

Preferred applicants will have a Machinists Technical School Diploma (trade or military equivalent) plus 2-5 years experience in a manufacturing environment.

The individuals selected for this will be required to maintain and repair high speed automated machinery, fabricate replacement parts to print specifications and be able to read electrical schematics in a 3-Shift operation.

Company offers excellent salary, benefits package, and working conditions. Apply in person or send resume to:

BIC CORPORATION
104 HIDDEN LAKE CIRCLE
DUNCAN, SC 29334
An Equal Opportunity Employer M/F

103286-16

BIC

QUESTIONS FOR USE WITH THE SAMPLE JOB ADS

1. What types of educational backgrounds are required for machine tool technicians?

2. What types of math skills are required in the jobs?

3. In the **WABCO** advertisement, what is meant by "close tolerances (.0002)?"

4. Do any of the advertisements offer opportunities for travel? If so, where to?

5. What types of work schedules are available? What are some fringe benefits offered?

6. What is the yearly salary for the "Machinist" position? (To convert hourly salary to yearly salary, multiply the hourly salary by 2080. 2080 is 40 hours per week times 52 weeks per year.)

7. What types of job duties do machine tool technicians perform?

8. What aspects of a machine tool technology career might interest you? Why?

APPENDIX B

Careers For Mechanical And Electronic Technicians

Michelin offers challenging opportunities for industrial technicians with backgrounds in either mechanics or electronics. These career opportunities are available to individuals who obtained their trade through two to three years of related industrial experience, complemented with training in the military or a vocational/technical school.

Mechanical Technicians must know the theory behind current mechanical technology and be able to read and use blueprints, as well as demonstrate proficiency in the use of math applied to practical situations. Electronics Technicians must also possess sound applied math skills and know the theory behind current electrical/electronic technology. The ability to read and interpret schematic diagrams is imperative.

Michelin is interested in individuals who want to develop current skills and broaden their knowledge through company-sponsored training programs.

Process Control Maintenance Group

Mechanical technicians install, modify, repair and maintain sophisticated process machinery that uses the latest control systems coupled with complex mechanical movements. On the job experience, along with Michelin formal training in hydraulics, pneumatics, electrical and electronics will enable the individual to perform total systems maintenance.

Electronics technicians, depending on job assignment, may perform total systems maintenance or electronic/electrical maintenance. On the job experience, coupled with Michelin formal training, will enable the individual to perform and progress in either maintenance capacity.

MICHELIN
PUTTING CAREERS IN MOTION.™

Careers For Machinists And Machine Operators

Machinists

Qualifications:

Applicants should have at least two years' experience as a machinist or training in the military or at a technical school.

Sound knowledge of machining technology/practices is required as well as the ability to read blueprints and use math from basic arithmetic through algebra and trigonometry.

Applicants should show a desire to sharpen their skills in the machining field and learn new skills through Michelin training programs.

Michelin Careers

In the Central Machining Group:

Assignment to the Central Group involves the set-up and operation of lathes and mills in a job shop environment. Applying blueprint analysis skills and math skills. Michelin machinists produce high quality parts made to precise tolerances with minimal supervision.

Machine Operators

Qualifications:

Applicants should have at least two years' experience as a machine operator or training in the military or at a technical school.

General knowledge of machining technology/practices is required as well as the ability to read blueprints and apply basic and intermediate math.

Applicants should show a desire to sharpen their skills in the machining field and learn new skills through Michelin training.

Michelin Careers

In the Production Machining Group:

Assignment to the Production Group involves the set-up and operation of one machine to produce large quantities of similar parts. Machinists in the production group at Michelin utilize math skills, blueprint analysis skills and sound machine shop practices to manufacture precision parts at an extremely efficient rate.

MICHELIN
PUTTING CAREERS IN MOTION.™

APPENDIX E

SCANS Commission: Workplace Know-How

The know-how identified by SCANS (Secretary of Labor's Commission on Achieving Necessary Skills) is made up of five competencies and a three-part foundation of skills and personal qualities that are needed for solid job performance. These include:

Competencies. Effective workers can productively use:

- *Resources*— allocating time, money, materials, space and staff.
- *Interpersonal Skills*—working on teams, teaching others, serving customers, leading, negotiating, and working well with people from culturally diverse backgrounds.
- *Information*— acquiring and evaluating data, organizing and maintaining files, interpreting and communicating, and using computers to process information.
- *Systems*— understanding social, organizational, and technological systems, monitoring and correcting performance, and designing or improving systems.
- *Technology*— selecting equipment and tools, applying technology to specific tasks, and maintaining and troubleshooting technologies.

The Foundation. Competence requires:

- *Basic Skills*— reading, writing, arithmetic, mathematics, speaking and listening.
- *Higher-Order Thinking Skills*— thinking creatively, making decisions, solving problems, seeing things in the mind's eye, knowing how to learn, and reasoning.
- *Personal Qualities*— individual responsibility, self-esteem, sociability, self-management, and integrity.

(Source: WorkAmerica, September 1991, p. 4.)