DOCUMENT RESUME

ED 330 856 CE 057 624

TITLE	Industrial Sheet Metal Apprentice Curriculum. Instructor's Guide and Apprentice Guide.
INSTITUTION	Northeast Wisconsin Technical Coll., Green Bay.
SPONS AGENCY	Wisconsin State Board of Vocational, Technical, and Adult Education, Madison.
PUB DATE	Jun 89
NOTE	718p.
PUB TYPE	Guides - Classroom Use - Teaching Guides (For Teacher) (052) -- Guides - Classroom Use - Instructional Materials (For Learner) (051)
EDRS PRICE	MF04/PC29 Plus Postage.
DESCRIPTORS	*Apprenticeships; *Competency Based Education; Course Content; Course Organization; Job Skills; Laboratories; Learning Activities; Machine Tool Operators; *Machine Tools; Occupational Safety and Health; Postsecondary Education; *School Shops; Secondary Education; *Sheet Metal Work; Skill Development; Test Items; Trade and Industrial Education; Vocational Education; Welding

ABSTRACT

This packet contains competency-based curriculum guides for a sheet metal apprentice program for both teacher and students. Following a competency list and a list of recommended textbooks, the guides provide 12 units covering the following topics: safety, communication, feasibility study, planning, material list, layout, fabrication, fasteners, welding, rigging, installation, and repair. Each unit contains one to six lesson plans. Teacher lesson plans consist of some or all of the following: competency list, objectives, learning activities, applications, evaluation/check out, learning materials, equipment and materials needed, resources, information sheet(s), assignment sheet(s), sample test questions, and answers to sample test questions. Student lessons contain the same items with the exception of sample test questions and answers. A competency profile to record student achievement is also provided. (KC)

INDUSTRIAL SHEET METAL APPRENTICE CURRICULUM

Instructor's Guide

INDUSTRIAL SHEET METAL APPRENTICE CURRICULUM

INSTRUCTOR GUIDE

WISCONSIN TECHNICAL COLLEGE SYSTEM
JUNE, 1989

FOREWORD

In 1988 a carefully chosen group of individuals formed a DACUM (Developing a Curriculum) committee. The committee members were recruited directly from the business, industry, and professions specializing in sheet metal work.

Under the guidance of a facilitator, the participants worked for two full days. The outcome of their meeting was a complete list of the major duties and tasks an Industrial Sheet Metal Apprentice would perform on the job. Next, a competency chart was developed, reviewed, and accepted by the entire panel.

This curriculum has been developed under the direction of Northcentral Technical College to support the tasks created by the DACUM panel. The information is to be used as a roadmap by the Industrial Sheet Metal instructors in providing instruction to their students. It is designed to be supplemented by each instructor's own teaching methods, experience, and additional materials.

Terri Johnson, Technical Writer
Charlene Wacek, Technical Writer
Moraine Park Technical College
Fond du Lac, Wisconsin
June, 1989

ACKNOWLEDGMENTS

Appreciation is expressed to the many individuals and companies who gave their time, talents and knowledge in the preparation of this guide.

A special thanks to the Industrial Sheet Metal instructors who shared their materials and ideas and reviewed the final product. Without their combined efforts this publication would not have been possible.

Mr. James Steinbruecker
Mr. Gene Erickson
Mr. Dennis Noll

Gratitude is also expressed to the DACUM panel and the North Central Technical College for their critique and input.

Mr. Charles Pinkepank
Ms. Terese Seaman
Mr. Al Eldridge
Mr. Adrean (Butch) Kort
Mr. James Perner
Mr. Bernie Shakal
Mr. Vern Baudhuin
Mr. Robert Okray
Mr. James Goetsch
Mr. Kendall Swenby

TABLE OF CONTENTS

TEXTBOOKS

The following are recommended texts for this course.

1. Short Course in Sheet Metal Shop Theory, Including 25 Practical Projects, by Richard S. Budzik, Practical Publications.

2. Practical Sheet Metal Layout, Fittings Used Today that Require Triangulation, Including the Theory of Triangulation, Second Edition, by Richard S. Budzik, Practical Publications.

3. Practical Sheet Metal Layout, Round Fittings Used Today, Including Methods and Techniques of Fabricating Round Work, Second Edition, by Richard S. Budzik, Practical Publications.

4. Today's 40 Most Frequently Used Fittings, Including Supplemental Section of 48 Fittings and Items, by Richard S. Budzik, Practical Publications.

5. Mathematics for Sheet Metal Fabrication, Delmar Publishers, Inc.

6. Sheet Metal Blueprint Reading for the Building Trades, by Claude J. Zinngrabe, Delmar Publishers, Inc.

USE OF THIS PUBLICATION

Competency-based curriculum materials, like all instructional materials, must be revised occasionally. When you find an error, or a point where an addition or revision would help to clarify or enhance the material, make note of it in your copy of the curriculum. These changes will be discussed at a future State called meeting. Your feedback is crucial in keeping this guide current and usable.

COMPETENCY LIST

1. Follow general safety precautions.
2. Practice proper housekeeping procedures.
3. Follow OSHA, state and federal safety codes.
4. Use safety devices.
5. Communicate effectively with management, co-workers, and customers.
6. Receive oral messages accurately.
7. Overcome barriers to effective communication.
8. Conduct a feasibility study.
9. Effectively plan a project.
10. Use different types of metals.
11. Choose materials for a specific job.
12. Interpret blueprint specifications.
13. Use mathematics to perform sheet metal operations.
14. Use measuring equipment.
15. Use layout tools.
14. Use parallel lines, radial lines, triangulation, and combination methods of development to complete basic and complex sheet metal layouts.
15. Select appropriate hand tools for a job.
16. Use hand tools safely.
17. Select and use sheet metal machinery safely.
18. Cut and notch sheet metal.
19. Punch and drill holes in sheet metal.
20. Bend and shape sheet metal.
21. Fabricate metal using rolling and forming machines.
22. Select and use appropriate fastening hardware.
23. Solder and spot weld metals.
24. Use seams to join two pieces of metal.
25. Use equipment and materials safely.
26. Set up and clean oxyacetylene welding equipment.
27. Cut, weld, and solder using oxyacetylene welding equipment.
28. Braze with oxyacetylene welding equipment in all positions.
29. Select, prepare, adjust, and operate metallic inert gas welders (MIG).
30. Select, prepare, adjust, and operate tungsten inert gas welders (TIG).
31. Use rope, chains, slings, cables, and climbing devices safely.
32. Follow hand signals.
33. Move heavy equipment safely.
34. Use lifting devices properly.
35. Rig various types of scaffolding.
36. Correctly install completed project.
37. Repair or replace damaged sheet metal products.

SAFETY

- GENERAL SAFETY PRECAUTIONS
- OSHA STANDARDS
- SAFETY DEVICES

GENERAL SAFETY PRECAUTIONS

COMPETENCIES:

1. Follow general safety precautions.
2. Practice proper housekeeping procedures.

OBJECTIVES:

1. Arrange in order the steps in lifting safely.
2. Identify proper clothing, eye protection, head protection, ear protection, foot protection, and hand protection.
3. Outline general housekeeping precautions.
4. Point out the ways you can practice personal safety.
5. Describe the importance of maintaining tools used in the trade.
6. Discuss the importance of proper ventilation.
7. List rules for electrical safety.
8. Make safety suggestions for your work place.
9. Identify lockout procedures.
10. Explain proper tank entry procedures.
11. Summarize common causes of on-the-job accidents.

LEARNING ACTIVITIES:

1. READ "Shop Safety Rules" from the Short Course in Sheet Metal Shop Theory by Richard Budzik, pages 2 and 3.

2. COMPLETE questions 1-10 on page 3 of the Short Course in Sheet Metal Shop Theory. Check your answers with another student or your instructor. REVIEW any answers you missed.

3. READ the Safety on the Job information sheet.
   Note. A copy of the sheet is included in this guide and the apprentice guide.

4. STUDY the Classroom/Shop Safety Rules information sheet.
   Note: A copy of the sheet is included in this guide and the apprentice guide.

5. CREATE a safety poster.
   Note: Divide students into groups of two or three. Provide poster board and drawing materials for students to use in constructing posters. Assign students a topic or let them choose one (housekeeping, lifting, electrical safety, etc.). Display the posters on the shop walls.

6. PARTICIPATE in a lecture/discussion on shop safety rules.

Note: Use examples of personal safety equipment for head protection, hearing protection, eye and face protection, and respiratory protection.

7. OPTIONAL: VIEW the videotapes on safety as assigned by your instructor.
   Note: Several videotapes on safety may be shown. See the Resource section for ideas.

8. PRACTICE lifting and carrying materials.
   Note: If you are conducting your class in or near the sheet metal shop, have the class practice moving stacks of sheet metal.

9. COMPLETE the Safety Suggestions assignment sheet.
   Note: A copy of the sheet is included in this guide and the apprentice guide.

APPLICATIONS:

1. Clean work area.
2. Wear appropriate protective clothing.
3. Use safety glasses or face shields.
4. Store and clean tools properly.
5. Follow lockout procedures.
6. Follow proper tank entry procedures.

EVALUATION/CHECK OUT:

1. Submit the Safety Suggestions assignment sheet.
2. Submit your Applications Checklist.
3. Demonstrate your knowledge of the objectives in a test situation.

LEARNING MATERIALS:

1. The text, Short Course in Sheet Metal Shop Theory by Richard Budzik.
2. Poster board and markers for the safety posters.
3. Copies of a test on Safety. Several sample test questions are included in this guide.

EQUIPMENT AND MATERIALS:

Examples of protective devices used for the head, ears, eyes, hands, feet, etc.

RESOURCES:

1. Audio-Visual Materials

A. "The Safety Secret" available from Video Communications Associates, 2860 Walnut Hill Lane, Suite 116, Dallas, TX, 75229. (214-357-6487)

This film follows Mike, a typical employee who thinks he's safe, but doesn't "think safety." A careless work injury causes Mike to prematurely meet "The Great Safety Director in the Sky," who won't let Mike return to earth until he discovers the "secret" of safety. While trying to discover the key "secret," Mike learns how to: realize and respond to hazards, manage stress, and be prepared for emergencies.

B. "Don't Be Shocked" available from Video Communications Associates, 2860 Walnut Hill Lane, Suite 116, Dallas, TX, 75229. (214-357-6487)

The presenter of this film is Ronald M. Sato, a plastic surgeon specializing in electrical burns. The film explains electricity, conductors and insulators and how the human body is affected by high voltage and low voltage electricity.

Also presented: fire extinguishers for electrical fires; why sprayers and paint brushes may be a hazard, hazards of working in wet areas; procedures for electrical lockout; and concludes with CPR.

C. "Safety Stories" available from Video Communications Associates, 2860 Walnut Hill Lane, Suite 116, Dallas, TX, 75229. (214-357-6487)

This video gets employees thinking and talking about safety by dramatizing real, on-the-job incidents and showing how they could have been prevented. Fifteen minutes in length.

D. "Safety . . . The Brief Employment of Joe Bugbrain" available from Marshall Maintenance Productions, 529 S. Clinton Avenue, Trenton, New Jersey, 08611. (1-800-257-0430)

This program shows major safety hazards and new employee will be exposed to in an industrial plant or maintenance shop. Some of the items covered are housekeeping, ladders, welding flashes, grinders and improperly grounded electrical tools. The importance of safety glasses, hard hats and safety shoes are stressed.

E. "Safe Tank Work" available from Marshall Maintenance Productions, 529 S. Clinton Avenue, Trenton, New Jersey,

08611. (1-800-257-0430)

An actual tank repair is shown on the video with explosimeters, rescue harnesses and other precautions.

F. "Power and Hand Tool Safety" available from Tel-A-Train, P.O. Box 4752, 309 North Market Street, Chattanooga, TN, 37405. (1-800-251-6018)

This program demonstrates the proper methods of selection, inspection and use of hand and portable power tools, both on the job and at home. The importance of exercising judgment and control before, during, and after the job is emphasized.

The dangers of commonly misused hand tools and electrical, pneumatic and gasoline powered tools are presented.

G. "Hearing Safety" available from Tel-A-Train, P.O. Box 4752, 309 North Market Street, Chattanooga, TN, 37405. (1-800-251-6018)

This program stresses the importance of hearing conservation in all noisy environments. The dangers of industrial noise are demonstrated and the correct use of protective devices is shown.

H. "Minimizing Back Strain on the Job" available from available from Tel-A-Train, P.O. Box 4752, 309 North Market Street, Chattanooga, TN, 37405. (1-800-251-6018)

This in-depth program goes farther than anything every done on back injury. It emphasizes both the day-to-day strains of lifting, sitting, and bending as well as the dangers of improper lifting. Explanations are given of the ways in which back injuries can occur. Proper lifting techniques are demonstrated.

I. "Slips and Falls: The Point of No Return" available from Tel-A-Train, P.O. Box 4752, 309 North Market Street, Chattanooga, TN, 37405. (1-800-251-6018)

This program addresses the broad range of hazards associated with on-the-job injuries. It demonstrates how good work habits can minimize the chance of injury. Safe uses of ladders are discussed in detail.

J. "Electrical Lockout/Tagout" available from Tel-A-Train, P.O. Box 4752, 309 North Market Street, Chattanooga, TN, 37405. (1-800-251-6018)

This program clearly explains the principles of safe electrical lockout procedures. Physical locks and tags

are discussed and examples are given of different procedures that may be used.

INFORMATION SHEET

SAFETY ON THE JOB

Having the proper safety attitude is necessary in a sheet metal shop, because the worker is constantly exposed to hazardous equipment and substances. Most accidents are caused by thoughtlessness.

Safe working practices allow for:

- The elimination of pain or discomfort from personal injury
- The elimination of the loss of equipment or the expense of repair
- The elimination of lost time and lost wages
- The psychological well being of all employees
- Higher productivity

COMMON CAUSES OF ACCIDENTS

1. Accidents are often caused because the conditions are UNSAFE. A tool, machine, or other piece of equipment may have been improperly designed, installed or maintained.

2. Sometimes accidents are caused because a commonly accepted safety practice has been violated. For example, an employee may remove a machinery guard, throw material instead of carrying it, or use improper lifting techniques.

3. Finally, accidents can result from a combination of causes. An unsafe condition combined with an unsafe action causes the majority of accidents. For example the unguarded blade or a metal shear usually does not, in itself, cause an accident, but when a worker leaves a hand under the descending knife, the combination results in injury.

PERSONAL SAFETY

Practice the following requirements for personal safety:

1. Avoid wearing extra-loose shirts, trousers or overalls. Clothing should be loose enough to allow comfortable movement, but not baggy enough to catch in rotating machinery.

2. Do not wear neckties or belts with long loose ends. They could catch in rotating equipment and cause serious injury.

3. Wear appropriate foot wear. Usually steel toed shoes and heavy socks are recommended. Avoid wearing tennis shoes.

4. Do not wear rings, watches or other forms of jewelry, especially loose hanging jewelry because it can get caught in moving machinery or contact a live circuit and cause serious injury.

5. Wear a hard hat on the job site. Wear a cap when working around moving parts to keep hair from getting caught in machinery.

6. Wear gloves with long gauntlets when welding, but do not wear gloves around machinery or rotating parts.

7. Wear safety goggles when grinding or polishing or using striking tools.

8. Wear goggles or a hood when welding or cutting.

9. Wear a shirt with the sleeves cut off or rolled above the elbows.

10. Wear ear plugs when working in noisy areas.

VENTILATION

Standard air requirements for buildings must always be met. Where the natural ventilation is not sufficient to remove dust, fumes or vapors that will create or constitute a hazard, additional means of removal should be provided. In lieu of a general ventilating system, local exhaust, or blower units may be installed on the dust or fume producing machine, provided the required protection is secured thereby.

HOUSEKEEPING

Follow these housekeeping safety rules:

1. Keep tools and materials out of passageways when working with them; return tools and materials to proper storage areas when you're through with them.

2. Stack materials neatly away from passageways, walkways, electrical outlets and work areas.

3. Place scrap that can't be used in a trash can; return materials that can still be used to stock.

4. Keep oily rags in a closed metal container. Dispose of oily rags that will not be used again and be sure to place them in a proper receptacle.

5. Wipe up spilled oil, grease, or other slippery substances from the floor.

6. Keep paint, thinners and other flammable materials in a metal cabinet.

7. Keep all machines and tools clean and in good working order.

8. Do not use compressed air to clean machines of metal chips and cutting oil.

9. Inspect electrical cords and plugs before using them and do not carelessly pull or drag and electrical cord when using it.

ASSIGNMENT SHEET

SAFETY SUGGESTIONS

Directions: Look around your place of employment. Observe those safety rules that are followed. Make note of any rules that are not followed. Analyze safety practices where you work by answering the following questions.

1. The following safety practices are always followed: (Give examples of three or four.)

A. _____

B. _____

C. _____

D. _____

2. Describe two unsafe situations where you work.

A. _____

_____

_____

B. _____

_____

_____

3. Make three safety suggestions for your work site.

A. _____

_____

_____

B. _____

_____

_____

C. _____

_____

_____

INFORMATION SHEET

CLASSROOM/SHOP SAFETY RULES

Follow these rules when working in your school lab.

1. Work at your assigned work station only.

2. Always use the correct tools for each operation.

3. Keep all tools and machines in good order.

4. DO NOT talk to a person when operating a machine.

5. Always turn off the machine, even if you are leaving it for a moment.

6. The following are dangerous when near any moving machinery:
   - -finger rings
   - -neckties
   - -wrist watches
   - -watch chains
   - -open shirt sleeve
   - -loose clothing
   - -loose long hair

7. Make sure you have the correct amount of lighting and ventilation.

8. When finished, leave your work place clean and orderly.

9. Both material and time are expensive--be economical with both.

10. When in doubt, ask your instructor, NEVER be careless.

11. Protect your eyes with safety glasses.

12. Observe all of these safety obligations everyday.

REMEMBER, SAFETY FIRST, LAST, AND ALWAYS.

SAMPLE TEST QUESTIONS

GENERAL SAFETY PRECAUTIONS

Use the following questions to create a test on Safety.

TRUE OR FALSE

_____ 1. The reason someone usually get hurt in a shop is due to carelessness.

_____ 2. Safety in the shop applies only when you are operating machinery.

_____ 3. Learning the skill is more important than learning safety on the job.

_____ 4. It is alright to break small, minor safety rules if one is careful.

_____ 5. When lifting heavy objects, it is always best to lift with your back.

_____ 6. Protect your hands at all times by wearing gloves.

_____ 7. Safety glasses should be worn at all times.

_____ 8. Oily rags should be kept in a closed metal container.

_____ 9. Return all scrap metal to storage.

_____ 10. Use compressed air to clean tools quickly.

SHORT ANSWER

1. Why are most accidents caused? _____

2. Why is jewelry dangerous in a machine shop?

_____

_____

3. What should be worn over long hair?

_____

4. When should be gloves be worn?

_____

_____

_____

5. What should be worn to protect the eyes?

_____

6. When is oil or grease a hazard?

_____

_____

7. Where and how should inflammable materials be stored?

_____

_____

MULTIPLE CHOICE

1. Which of the following is the major goal for effective housekeeping?
   a. Accident prevention
   b. More effective work practices
   c. Appropriate ventilation
   d. Neatness on the job site

2. Which of the following is not a good safety practice when lifting and carrying materials alone?
   a. Place both hands directly under the load and slowly straighten the back
   b. Place both hands directly under the load and slowly straighten the knees
   c. Place both hands under the load, draw the load in close, and straighten the knees
   d. all of the above

3. Which of the following indicates safe and proper attire for the job?
   a. A worker who uses gloves when working with machine tools
   b. A worker who wears a ring when using an electric saw
   c. A worker who wears goggles when using the grinder
   d. All of the above

4. For which of the following trade tasks are safety goggles required?
   a. Cutting metal
   b. Shearing metal
   c. Grinding metal
   d. All of the above

5. The best type of shoes to wear in the shop are:
   a. Tennis shoes
   b. Hightopped boots

c. Any type
d. Hightopped, steel toed boots

ANSWERS TO SAMPLE TEST QUESTIONS

True or False

1. True
2. False
3. False
4. False
5. False
6. False
7. True
8. True
9. False
10. False

Short Answer

1. Carelessness.
2. Jewelry can be caught in moving machinery or can conduct electricity.
3. Some type of cap.
4. When hands are in danger of getting burned and when handling metal with sharp or rough edges which would cut you. Do not wear gloves around moving parts of machines.
5. Safety goggles, safety glasses, or a face shield.
6. When is it on the floor, on hand tools or if they come in contact with compressed oxygen.
7. In a safety container or well-ventilated compartment, away from heat sources.

Multiple Choice

1. A
2. A
3. C
4. D
5. D

OSHA STANDARDS

COMPETENCY:

Follow OSHA, state and federal safety codes.

OBJECTIVES:

1. Identify OSHA requirements for an employer and employee.
2. Outline the process for OSHA enforcement of safety standards.
3. Identify state and federal safety codes relevant to your industry.
4. Explain the enactment of the OSHA act.

LEARNING ACTIVITIES:

1. READ the Employer and Employee Requirements information sheet.
   Note: A copy of the sheet is included in this guide and the apprentice guide.

2. READ the OSHA Poster #2203.
   Note: A copy of the sheet is included in this guide and the apprentice guide.

3. PARTICIPATE in a class discussion on OSHA.

4. COMPLETE an OSHA codes class.

5. ATTEND a presentation by an OSHA representative.

6. DISCUSS the state and federal safety codes appropriate to your profession.

7. OPTIONAL: VIEW the videotape on OSHA requirements.
   Note: Several tapes are listed in the Resource section of this guide.

EVALUATION/CHECK OUT:

1. Attend a presentation by an OSHA representative.
2. Demonstrate your knowledge of the objectives in a test situation.

LEARNING MATERIALS:

Copies of a test on OSHA requirements. Several sample test

questions are included in this guide.

RESOURCES:

1. Audio-Visual Materials

   A. "OSHA - Life at Work II" available from Walter J. Klein Company, 6311 Carmel Road, Box 2087, Charlotte, NC, 28211. (704-542-1403) 15 minutes. 1977.

   The tape discusses occupational diseases, covering techniques of prevention. It deals with personal cleanliness, proper ventilation, reduction of noise pollution and job accidents. The videotape examines the tenets of the government's occupational health and safety regulations.

   B. "OSHA and Us" available from the University of Michigan, TV Center, 400 South Fourth Street, Ann Arbor, MI, 48109. (313-764-5360) 17 minutes. 1977.

   This film discusses the Occupational Safety and Health Act and the impact of the regulations. It is filmed on location in research and teaching laboratories. The videotape illustrates potentially dangerous health and safety situations.

   C. "OSHA File - Cases and Compliances" available from The Bureau of Business Practice, 24 Rope Ferry Road, Waterford, CT, 06386. (1-800-243-0876) 20 minutes.

   The film shows supervisors, though court cases drawn from actual OSHA files, and the steps they must take to live up to the law.

2. OSHA representatives are available for seminars to your classes. There are representatives out of Milwaukee and Appleton. The Appleton Office number is 414-734-4521.

INFORMATION SHEET

EMPLOYER AND EMPLOYEE REQUIREMENTS

OSHA stands for the Occupational Safety and Health Administration. The Occupation Safety and Health Act was passed in 1970. The law assures every working man or woman in the nation safe and healthful working conditions and the safekeeping of our human resources. The law also organized accident prevention programs in school shops.

WHAT OSHA EXPECTS OF AN EMPLOYER

1. To provide a hazard-free work place and comply with occupational safety and health standards.

2. To inspect job sites to assure they meet safety standards.

3. To use properly color-coded signs to warn of danger.

4. To keep required records of work-related injuries and to post an annual summary in February of each year.

5. To report within 48 hours to OSHA any accident which is fatal or hospitalizes 5 or more workers.

6. To post in a prominent place OSHA poster #2203 informing workers of their rights and responsibilities.

WHAT OSHA EXPECTS OF AN EMPLOYEE

1. To read the OSHA poster #2203 and comply with its standards.

2. To follow employer safety and health rules and wear prescribed clothing or protective clothing on the job.

3. To report hazardous conditions to a supervisor.

4. To report all job-related injuries to a supervisor and seek prompt treatment if required.

5. Report to OSHA in a responsible manner any hazardous working situations which you feel the employer has not attended to properly.

OSHA Poster #2203

job safety and health protection

The Occupational Safety and Health Act of 1970 provides job safety and health protection for workers through the promotion of safe and healthful working conditions throughout the Nation. Requirements of the Act include the following

Employers: Each employer shall furnish to each of his employees employment and a place of employment free from recognized hazards that are causing or are likely to cause death or serious harm to his employees; and shall comply with occupational safety and health standards issued under the Act.

Employees: Each employee shall comply with all occupational safety and health standards, rules, regulations and orders issued under the Act that apply to his own actions and conduct on the job.

The Occupational Safety and Health Administration (OSHA) of the Department of Labor has the primary responsibility for administering the Act. OSHA issues occupational safety and health standards, and its Compliance Safety and Health Officers conduct jobsite inspections to ensure compliance with the Act

Inspection: The Act requires that a representative of the employer and a representative authorized by the employees be given an opportunity to accompany the OSHA inspector for the purpose of aiding the inspection

Where there is no authorized employee representative, the OSHA Compliance Officer must consult with a reasonable number of employees concerning safety and health conditions in the workplace

Complaint: Employees or their representatives have the right to file a complaint with the nearest OSHA office requesting an inspection if they believe unsafe or unhealthful conditions exist in their workplace. OSHA will withhold, on request, names of employees complaining

The Act provides that employees may not be discharged or discriminated against in any way for filing safety and health complaints or otherwise exercising their rights under the Act

An employee who believes he has been discriminated against may file a complaint with the nearest OSHA office within 30 days of the alleged discrimination

Citation: If upon inspection OSHA believes an employer has violated the Act, a citation alleging such violations will be issued to the employer. Each citation will specify a time period within which the alleged violation must be corrected.

The OSHA citation must be prominently displayed at or near the place of alleged violation for three days, or until it is corrected, whichever is later, to warn employees of dangers that may exist there.

Proposed Penalty: The Act provides for mandatory penalties against employers of up to $1,000 for each serious violation and for optional penalties of up to $1,000 for each nonserious violation. Penalties of up to $1,000 per day may be proposed for failure to correct violations within the proposed time period. Also, any employer who willfully or repeatedly violates the Act may be assessed penalties of up to $10,000 for each such violation.

Criminal penalties are also provided for in the Act. Any willful violation resulting in death of an employee, upon conviction, is punishable by a fine of not more than $10,000 or by imprisonment for not more than six months, or by both. Conviction of an employer after a first conviction doubles these maximum penalties

Voluntary Activity: While providing penalties for violations, the Act also encourages efforts by labor and management, before an OSHA inspection, to reduce injuries and illnesses arising out of employment.

The Department of Labor encourages employers and employees to reduce workplace hazards voluntarily and to develop and improve safety and health programs in all workplaces and industries.

Such cooperative action would initially focus on the identification and elimination of hazards that could cause death, injury, or illness to employees and supervisors. There are many public and private organizations that can provide information and assistance in this effort, if requested

More Information: Additional information and copies of the Act, specific OSHA safety and health standards, and other applicable regulations may be obtained from your employer or from the nearest OSHA Regional Office in the following locations:

Atlanta, Georgia
Boston, Massachusetts
Chicago, Illinois
Dallas, Texas
Denver, Colorado
Kansas City, Missouri
New York, New York
Philadelphia, Pennsylvania
San Francisco, California
Seattle, Washington

Telephone numbers for these offices, and additional Area Office locations, are listed in the telephone directory under the United States Department of Labor in the United States Government listing

Washington, D.C.
1981
OSHA 2203

Raymond J. Donovan
Secretary of Labor

U. S. Department of Labor
Occupational Safety and Health Administration

SAMPLE TEST QUESTIONS

OSHA STANDARDS

---

1. Indicate whether OSHA expects the following of an employer by writing "Yes" or "No" in the blanks before the following statements.

_____ a. To provide a hazard-free work place and comply with occupational safety and health standards.
_____ b. To inspect job sites to assure they meet safety standards.
_____ c. To use proper color-coded signs to warn of danger.
_____ d. To keep required records of work-related injuries and to post an annual summary every two years.
_____ e. To report within one week to OSHA any accident which is fatal or hospitalizes more than three people.
_____ f. To post in a prominent place OSHA post #2203 informing workers of their rights and responsibilities.

2. Indicate whether OSHA expects the following of an employee by writing "Yes" or "No" in the blanks before the following statements.

_____ a. Read the OSHA poster #2203 and comply with it's standards.
_____ b. Follow employer safety and health rules and wear prescribed protective equipment on the job.
_____ c. Report hazardous situations to a supervisor within 48 hours.
_____ d. Report all job related injuries to a supervisor immediately. Seek prompt treatment if required.
_____ e. Report to OSHA in a responsible manner any hazardous working situations which you feel the employer has not attended to properly.

3. What does OSHA stand for?

_____

_____ 4. OSHA inspections:
   a. Are conducted monthly
   b. Are conducted each year in February
   c. May be conducted at random
   d. Are only conducted if a violation is suspected

_____ 5. During an OSHA inspection:
   a. The Health Officers inspect alone
   b. The Health Officers are accompanied by an employee representative
   c. The Health Officers are accompanied by the employer
   d. The Health Officers are accompanied by the employer and an employee representative

_____ 6. Complaints requesting an inspection may be filed:
   a. Only by an employee
   b. By an employee, whose name can be withheld
   c. Only after an accident
   d. Within 45 days of a discrimination

_____ 7. Citations from OSHA regarding violations:
   a. Must be corrected within 48 hours
   b. Must be corrected within 30 days
   c. Must be corrected according to the timeline established by OSHA
   d. Must be corrected as soon as possible

_____ 8. Penalties for violations are:
   a. Up to $1000 for each serious violation
   b. $1000 per day for failure to correct the violation
   c. Up to $1000 for each nonserious violation
   d. All of the above

9. List three state safety codes that are pertinent to your job:

_____

_____

_____

ANSWERS TO SAMPLE TEST QUESTIONS

1. a, b, c, f
2. a, b, d, e
3. Occupational Safety and Health Administration
4. c
5. d
6. b
7. c
8. e
9. As discussed in class

SAFETY DEVICES

COMPETENCY:

Use safety devices.

OBJECTIVES:

1. Differentiate between types of fire extinguishers and their uses.
2. Explain how to operate different types of fire extinguishers.
3. Explain evacuation procedures in the event of a fire.
4. Identify different classifications of fires.
5. Use personal safety devices.
6. Identify the purpose for guards on machinery.
7. List the mechanisms that require guards.

LEARNING ACTIVITIES:

1. READ the Fire Extinguishers Information Sheet.
   Note: A copy of the sheet is included in this guide and the apprentice guide.

2. STUDY the Fire Safety Information Sheet.
   Note: A copy of the sheet is included in this guide and the apprentice guide.

3. COMPLETE the Building Evacuation Assignment Sheet.
   Note: A copy of the sheet is included in this guide and the apprentice guide.

4. OPTIONAL: VIEW the tape on Fire Safety.
   Note: Several tapes are listed in the Resource section of this guide.

5. PARTICIPATE in a lecture/discussion on fire safety. WATCH your instructor demonstrate the different types of fire extinguishers.

6. READ the Guards information sheet.
   Note: A copy of the sheet is included in this guide and the apprentice guide.

EVALUATION/CHECK OUT:

1. Submit your Building Evacuation Assignment Sheet.
2. Demonstrate your knowledge of the objectives in a test situation.

LEARNING MATERIALS:

Copies of a test on Safety Devices. Several sample test questions are included in this guide.

EQUIPMENT AND MATERIALS:

Different types of fire extinguishers

RESOURCES:

1. Audio-visual Materials:
   A. "Fire Protection Awareness" available from Gulf Publishing Video, P.O. Box 2608, Houston, TX, 77001. (713-529-4301) 17 minutes.

   The film explains the four main classes of fires and how each is extinguished. It shows the need for immediate action, how to alert others, and why periodic inspections are important.

   B. "Fire Protection" available from TPC, 1301 South Grove Avenue, P.O. Box 1030, Barrington, IL, 60010. (312-381-1840). 12 minutes.

   The film discusses the causes of fires, how they start, hazards, prevention and fire extinguishers.

2. The local fire department is a good source for seminars and special speakers on fire safety.

ASSIGNMENT SHEET

FIRE EXTINGUISHERS

GENERAL RULES FOR FIRE SAFETY

1. Report immediately anything that might indicate a potential fire hazard.
2. Know the location and the proper operation of fire extinguishers and make sure they have been checked recently.
3. Know where the nearest telephone is and make sure the number of the nearest fire department is listed on the phone.
4. Know the procedure for evacuating the building and the location of all exits in case one or more exits are blocked.
5. Smoke only in authorized areas and make sure cigarette butts are completely extinguished and properly discarded.
6. Examine materials and equipment around the work place to determine what type or types of fires might occur, then make sure available fire extinguishers are correct for the classes of fires that might occur.
7. Isolate combustible materials in fire-resistant areas.
8. Dispose of rubbish regularly.
9. Conduct fire drills at regular intervals to make sure the alarm can be heard over shop noises and that everyone knows evacuation routes, exits and assembly points.

CLASSES OF FIRES

CLASS A FIRES: Result from ordinary combustibles such as wood, paper or cloth.

CLASS B FIRES: Result from flammable liquids such as gasoline, oil, paints, solvents or grease.

CLASS C FIRES: Result from electrical wires, switches, or motors.

TYPES OF FIRE EXTINGUISHERS

FOAM — Foam fire extinguishers are recommended for class A and class B fires. To use turn the extinguisher upside down. Don't spray stream into the burning liquid. Allow foam to fall lightly on the fire.

CARBON DIOXIDE	Carbon dioxide fire extinguishers are recommended for class B and C fires. To use, squeeze the handle. Direct discharge as close to the fire as possible, first at the edge of the flames, then gradually forward and upward.
SODA ACID	Soda Acid fire extinguishers are recommended only for class A fires. To use, turn the extinguisher upside down. Direct stream at the base of the fire.
WATER	Water is recommended for class A fires. To use a water fire extinguisher, squeeze the handle and spray at the base of the fire. (A water hose or bucket may also be used.)
CHEMICAL	Chemical fire extinguishers are recommended for all classes of fires. To use, squeeze the handle and direct at the base of the flames. With a class A fire, follow up by directing the chemicals at the remaining material that is burning.

BUILDING EVACUATION RULES

1. Close all windows and doors as you leave the building.
2. Leave the building quickly but orderly.
3. Know the best route to take when leaving the building, but also know alternate routes.
4. Move away from the building during a fire.

INFORMATION SHEET

FIRE SAFETY

KIND OF FIRE	APPROVED TYPE OF EXTINGUISHER						
DECIDE THE CLASS OF FIRE YOU ARE FIGHTING. . . ↓	. . .THEN CHECK THE COLUMNS TO THE RIGHT OF THAT CLASS →	MATCH UP PROPER EXTINGUISHER WITH CLASS OF FIRE SHOWN AT LEFT						
		FOAM Solution of Aluminum Sulphate and Bicarbonate of Soda	CARBON DIOXIDE Carbon Dioxide Gas Under Pressure	SODA ACID Bicarbonate of Soda Solution and Sulphuric Acid	PUMP TANK Plain Water	GAS CARTRIDGE Water Expelled by Carbon Dioxide Gas	MULTI-PURPOSE DRY CHEMICAL	ORDINARY DRY CHEMICAL
CLASS A FIRES USE THESE EXTINGUISHERS → ORDINARY COMBUSTIBLES • WOOD • PAPER • CLOTH ETC.		A B	X	A	A	A	A B C	X
CLASS B FIRES USE THESE EXTINGUISHERS → FLAMMABLE LIQUIDS, GREASE • GASOLINE • PAINTS • OILS, ETC.		A B	B C	X	X	X	A B C	B C
CLASS C FIRES USE THESE EXTINGUISHERS → ELECTRICAL EQUIPMENT • MOTORS • SWITCHES ETC.		X	B C	X	X	X	A B C	B C

BEST COPY AVAILABLE

ASSIGNMENT SHEET

BUILDING EVACUATION

Directions: Draw a sketch of your work place. Include such details as hallways, doorways, fire escapes, windows, stairways, and other important features. Use a dark pen to draw the building, a read pen to draw dotted lines and arrows showing the best paths to take when leaving the building during a fire. Write any notes on the drawing you feel might tell a person what to do during a fire.

Indicate the location of fire extinguishers and the type of fire that might erupt in various work places.

INFORMATION SHEET

GUARDS

REASONS FOR GUARDS

The use of guards connot be overlooked when one is concerned about safety. The basic purpose of mechanical guarding is to protect against and prevent injury from these sources:

- o Persons making contact with moving parts of machines.
- o Work in process making contact with personnel.
- o Mechnical failure.
- o Electrical failure.
- o Human failure resulting from curiosity, zeal, distraction, fatigue, worry, anger, or illness.

TYPES OF MACHINES NEEDING GUARDS

1. Rotating mechanisms.

Rotating mechanisms are dangerous unless they are guarded. Examples included flywheels, pulleys, belts, and clutches. Although relatively few injuries are caused by such mechanisms, they are usually permanently disabling.

2. Cutting or shearing mechanisms.

Cutting and shearing mechanisms are dangerous at the points where a rotary cutting action is used or where the moving parts of a reciprocating mechansism approach or cross a fixed boject. Examples include band and circular saws, milling machines, grinding machines and drilling and boring machines.

3. Inrunning nip points.

This danger of an inrunning nip point is that is draws objects in and falttens them. Once an object is engaged, it is difficult, if not impossible to withdraw it. Examples include the point of contact between a belt and pulley, chain and sprocket and gear and rack.

4. Screw or worm mechanism.

If a person or object is caught in a screw or worm mechanism a mangling or battering action takes place. Example include screw conveyers and grinders of various types.

5. Forming or bending mechanisms.

Forming and bending machines are used for standing and forming pieces of metal. They account for the most hand and finger injuries. Examples include power presses, foot and hand presses, press brakes, metal shears, forging machines,

and bending presses.

TYPES OF GUARDS

To eliminate the danger from the machines mentioned previously, guards may be built and installed over the hazardous areas, or the equipment may be originally designed to have no dangerous parts exposed.

Guards may be installed at the point of operation and/or the source of power.

The preferred material for guards, under most circumstances is metal. An important factor in the design of a guard is the maximum size of opernings to be permitted in it. If a guard is to provide complete proptection, the openings must be large enough to admit the stock, but small enough to prevent a person or object from getting into the danger zone.

Devices to control delivery of power at the source include electrical switches and numerous varieties of valves, regulators, and metering devices. The metering devices are used to open, shut or otherwise control the flow and pressure of steam, pneumatic, and hydraulic media that energize machinery.

SAMPLE TEST QUESTIONS

SAFETY DEVICES

Note: Use the following questions to help you prepare a test on Safety Devices for your students.

TRUE OR FALSE

1. You should practice fire prevention.
2. It is not necessary to know what materials is burning in the fire if you use a soda acid fire extinguisher.
3. Give a fire a chance to go out on its own before reporting it.
4. When you see a fire, grab the closest fire extinguisher.
5. Water is the best fire extinguisher for class C fires.
6. Most guards are made from metal.
7. Guards need only to be used when you are new the machine.
8. Most accidents occur from cutting or shearing mechanisms.

MATCHING

Match the classes of fires with their causes.

_____ a.	Flammable liquids such as gas paint, or oil.	1. Class A
_____ b.	Ordinary combustibles such as paper, wood or cloth.	2. Class B
_____ c.	Electrical equipment, such as motors or switches	3. Class C

SHORT ANSWER

1. Point out the types of fire extinguishers and methods of use by writing the correct information in the blanks below.

TYPE OF EXTINGUISHER	CLASSES	TO OPERATE SPRAY
A. Foam	_____	_____
B. Carbon Dioxide	_____	_____

C. Water _____ _____

D. Soda Acid _____ _____

E. Chemical _____ _____

2. List three types of machines guards are needed for:

_____

_____

_____

ANSWERS TO SAMPLE TEST QUESTIONS

True or False:

1. True
2. False
3. False
4. False
5. False
6. True
7. False
8. False

Matching:

a. B
b. A
c. C

Short Answer:

1. A. Recommended for class A and B fires. To operate spray stream directly into burning liquid.
   B. Recommended for class B and C fires. Direct discharge as close to the fire as possible, first at the edge of the flames, then gradually forward and upward.
   C. Recommended for class A fires. Spray at the base of the fire.
   D. Recommended for class A fires. Turn the extinguisher upside down and direct spray at the base of the fire.
   E. Recommended for all classes of fires. Direct spray at the base of the fire.

2. Rotating machines, cutting or shearing machines, inrunning nip points, screw or worm mechanisms, forming or bending machines.

COMMUNICATION BASICS

COMPETENCY:

Communicate effectively with management, co-workers, and customers.

OBJECTIVES:

1. Define communication.
2. Identify a model of communication.
3. Explain the importance of good communication in work settings.
4. Define the term feedback.
5. Identify the value of positive feedback.
6. Summarize the value of negative feedback.
7. List four guidelines one should follow to respond appropriately to criticism.
8. List the three communication codes.
9. Define the term channel.
10. Discuss how noise effects the communication process.
11. Recognize the abilities of co-workers.
12. Act professionally on the job.

LEARNING ACTIVITIES:

1. READ the Definition of Communication information sheet.
   Note: A copy of the sheet is included in this guide and the apprentice guide.

2. COMPLETE the Interpersonal Gap assignment sheet.
   Note: A copy of the sheet is included in this guide and the apprentice guide.

3. COMPLETE the Feedback Collection and Analysis assignment sheet.
   Note: A copy of the sheet is included in this guide and the apprentice guide.

4. COMPLETE the What is Your Feedback Opinion? assignment sheet.
   Note: A copy of the sheet is included in this guide and the apprentice guide.

5. PARTICIPATE in class lectures and discussion on communication.

EVALUATION/CHECK OUT:

1. Submit your Interpersonal Gap assignment sheet.
2. Submit you Feedback Collection and Analysis assignment sheet.
3. Submit your What is Your Feedback Opinion? assignment sheet.
4. Demonstrate your knowledge of the objectives in a test situation.

LEARNING MATERIALS:

Copies of a test on Communication. Several sample test questions are included in this guide.

INFORMATION SHEET

DEFINITION OF COMMUNICATION

Communication is the process of people sharing thoughts, ideas and feeling with each other in commonly understandable ways. Communication is a frequent, everyday activity. In fact, probably over 12 hours in your day are spent in some form of communication: reading, writing, talking, or listening. Of that time, 75 percent or more will be spent in face-to-face communication through talking and listening.

SENDER AND RECEIVER:

Communication takes place between a sender and receiver. Actually, during most of our conversation we are both sending and receiving simultaneously. Think, for example, of conversations between journeymen and apprentices. When journeymen initiate the conversation, they are the senders and the apprentices are the receivers. However, when the apprentice responds, the journeymen become the receivers and the apprentices are the senders.

STIMULUS AND MOTIVATION:

Two things must happen before the sender even wants to send a message. First, the sender must be stimulated. Some types of stimulus triggers a thought, which in turn triggers the desire to communicate. A stimulus can be either internal or external, for example:

Internal: an example may be remembering to call someone.
External: an example may be an awkward silence in a conversation.

Stimulus alone is not enough to initiate communication. The second requirement to send a message is sufficient motivation. Think of a time your supervisor has asked for a recommendation concerning a sheet metal project. And you felt that you had a strong recommendation to provide. However, you refrained from providing it because you knew that it would not meet the supervisors satisfaction. In this example, the stimulus was very strong yet the motivation was lacking. You saw greater benefit in not answering. The importance of there two steps - stimulation and motivation - cannot be overlooked.

ENCODING AND DECODING:

After being stimulated and motivated to communicate, the sender must decide how best to convey a message to the specific receiver. The process of putting a message into the form in which it is to be communicated is called encoding. When the encoder's message is picked up, the receiver tries to make sense out of it, or decode it. Decoding is the process the receiver goes through in trying to interpret the exact meaning of a message.

For example, when a supervisor finds it necessary to reprimand an apprentice, encoding becomes very important. When encoding the message, the supervisor considers such factors as: the type of words they will use, the volume of their voice used or what facial expressions will be used. When the apprentice receives the reprimand the apprentice might consider such questions as: How serious a mistake have I made? Maybe they just don't like me. Am I going to be fired? Will they report this to my instructor at school?

FRAME OF REFERENCE:

Many communication breakdowns occur here. Whether you are communicating with only one person, with a small group, or with many people, the same basic process occurs and the same misunderstandings can arise. As a sender you use your own background and experience to encode messages. But receivers use their own background and experiences to decode those messages. Unless the backgrounds and experiences, called the frames of reference, of both sender and receiver are compatible, problems may develop in accurately encoding and decoding messages. Areas such as education, race, sex, parents, and past experiences all affect our frame of reference.

THE INTERPERSONAL GAP:

Effective communication exists between two people when the receiver interprets the sender's message in the way the sender intended. But we don't always communicate the meaning we intend. Perhaps the most common kind of communication failure results when the receiver interprets the meaning of a message in different way than is intended by the sender. The term used to describe this communication failure is interpersonal gap.

Interpersonal gap, then, refers to the difference between the meaning one person intends to convey and the actual effect of that person's messages or actions on another. For example, imagine that a co-worker needed your help with a particular project. You gave assistance with the project and then

continued to help the person when you felt your assistance was needed. You thought you were doing your co-worker a favor. However, your co-worker decoded your actions as meaning he was incompetent by always needing help. Your system does not match his system of decoding, and the consequent interpersonal gap is difficult to bridge. Interpersonal gaps occur when one's intentions do not match up with the effects inside another.

The key terms used to make sense of the interpersonal gap are intentions, actions, and effects.

Intentions may be defined as wishes, wants, hopes, desires, and fears that give rise to actions. Intentions may be defined as underlying motives of which you may be unaware.

Here are some examples of interpersonal intentions:

- "I want him to like my project."
- "I want him to realize that I know a great deal about this area of work."

Intentions may also be mixed:

- "I want him to know I respect him as a teacher, but I do not want to look like it's only because I want a good review on my project."
- "I want him to tell me I am doing a good job, but I do not want to ask for it."

Intentions are private and are known directly only to the one who experiences them. The sender knows their own intentions and can only be inferred by the receiver.

Actions may be defined as attempts by the sender to convey a message, whether or not it is received, as well as ways the receiver responds to the message, whether or not the sender intended it to be received that way.

In contrast to interpersonal intentions and effects, which are private, actions are observable, they may be verbal (saying "good morning"), or nonverbal (looking away when passing another), brief (a touch on the shoulder), or extended (taking a person out to dinner).

If there was only one way to express something, life would be easier. Because different people use different codes, actions have no unique and constant meaning, but are interchangeable.

In order to avoid an interpersonal gap, remember, the same intention may be expressed by different actions. For example, if your intention is to impress your instructor, you may express that through several actions. You might do extra

assignments, stay after class, or show interest in what they do outside of the classroom. On the other hand, different intentions may be expressed by the same action. You might stay after class for any one of a number of intentions: to finish up work, to talk with a friend, or to wait for a ride, to name a few.

The term <u>effects</u> in this context refers to a person's inner response to the actions of another. The sender may assume that he/she know the receiver's feelings that are aroused by their actions. However, feelings are a very private possession. You could not possibly know what feelings are being expressed unless the receiver told you.

What makes an interpersonal gap even more likely is that the same action may lead to different effects. For example, if your journeyman took you out for coffee, his action may create one of several effect inside of you:

- You may feel uneasy and think, "I wonder what my journeyman really wants from me?"
- You may enjoy it and think, "This guy is great to work with."

Several different actions may create the same effect inside another. If the effect inside of Bill is that he feels proud and happy and thinks, "My journeyman recognized my competence and ability," it may have been caused by one of several actions on the journeyman's part:

- The journeyman told Bill that he has been doing an excellent job.
- The journeyman asked Bill for advice.

We can now draw a more complete picture of the interpersonal gap as follows.

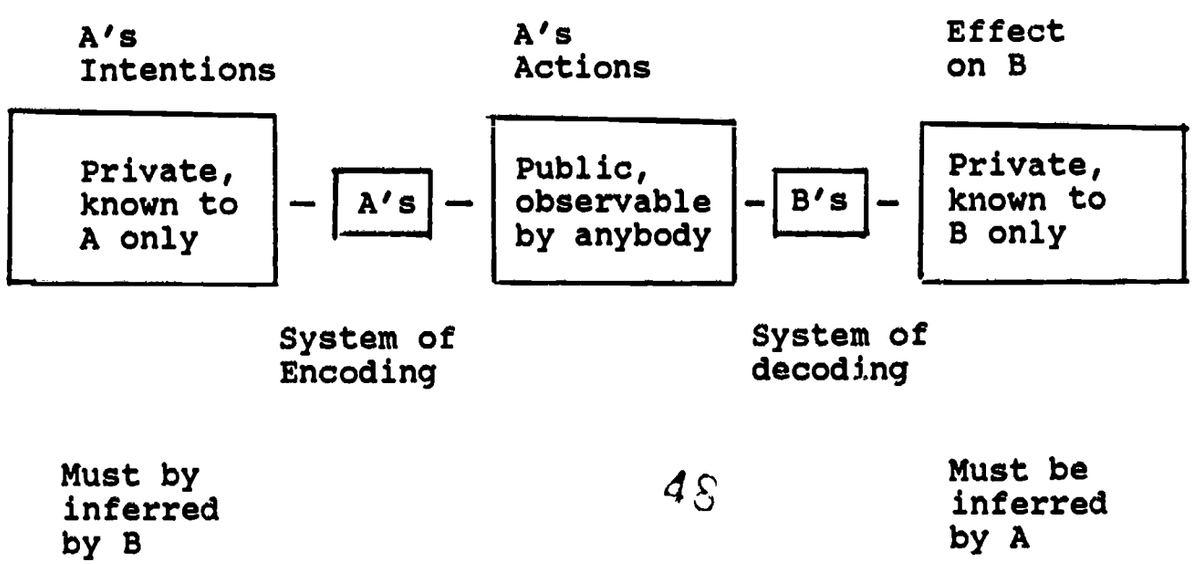

48

It would be wonderful if accurate and effective communication would just happen. The truth is as just explained, no matter how hard we try, we do not always communicate what we intend to.

CODE:

The code is not the message but the symbols that carry the message. There are three basic communication codes:

1. Nonverbal (55 percent): all intentional and unintentional means other than writing or speaking, by which a person sends a message, including such things as facial expressions, gestures, appearance, and posture.
2. Language (7 percent): either spoken or written words used to communicate thoughts and emotions.
3. Paralanguage (38 percent): the verbal elements that go along with spoken language, including such qualities of the voice as tone, pitch, rate, volume, and emphasis.

To communicate effectively the sender must communicate the same message by all three codes. However, many people either deliberately or unknowingly send conflicting messages. Whenever there is a conflict among the messages received, people tend to believe more of what they see than what they hear. For example, if you are asked to answer a question in the classroom and do not know the exact answer, your lack of eye contact and uneasiness may indicate to the instructor that you are not sure of the answer before you even begin to respond.

CHANNEL:

The success of your message may depend on the channel you select. A channel is the medium selected to carry the message. Some examples of communication channels are :

1. face-to-face discussion
2. memorandum
3. professional journals
4. newsletter
5. telephone
6. FAX

In deciding which channel is most appropriate for communication, consider the following items:

1. The importance of the message: Important messages usually require the face-to-face channel.
2. The needs and abilities of the receiver: Some

people are able to work from memos and phone conversations; others interpret messages better and are happier in face-to-face situations.

3. How much and how soon feedback is needed: Complicated messages needing immediate feedback require the face-to-face channel where all codes are present.
4. Whether a permanent record is necessary: Memos and written instructions can be used to verify a conversation and to serve as a permanent record of what was said. Memos are also appropriate when the receiver must analyze the sender's request before providing a response.
5. Whether formality or informality is desired: Although face-to-face communication can be quite formal, it is normally considered less formal than a newsletter or a memorandum. Journals and newsletters are informal, one way communication.
6. The importance of time: FAX is a communication method to send written or printed documents through the telephone. This method is faster than sending information through the mail.

The channel selected is also very important when communicating with the public. For example, suppose you are considering advising a customer on various options concerning a product. A face-to-face discussion would prove to be much more effective than a written correspondence. In other causes a written channel is more appropriate. If you are told to fabricate a new product, written procedure will be clearer and much more precise than face-to-face instructions passed on throughout the organization.

ENVIRONMENT:

The environment includes the time, place, physical and social surrcundings in which the communicator find themselves. For example, the quality of your work may vary depending on the time of day. Communication is also affected by the physical environment. Such conditions as the size of your work area, the brightness of the lights, the room temperature, the noise level can alter the type and success of communication. Social environment refers to the relationships of people present. For example, apprentices may act differently at a social gathering if their journeyman is present.

NOISE:

Anything that interferes with communication and distorts or blocks the message is noise. External noise includes distractions in the environment, such as the speaker's poor grammar, phones ringing, hand tools and machines operating,

people talking, or lights that are too bright or too dim. Internal noise refers to conditions of the receiver, such as a headache, daydreaming, lack of sleep, or lack of knowledge on the topic being discussed. Any of these noises can distort or block communication.

INFORMATION SHEET

FEEDBACK

Feedback is evaluative information about you, your behavior, or the results of your behavior. It is information resulting from judgments made about you or something you did. When a person observes their own behavior and resolves to do better next time, when a person asks a friend to give an opinion on how well they have handled a certain situation, or when the journeyman suggest ways apprentices can improve their performance, feedback is being employed.

Feedback can be extremely valuable because it lets you know how you are doing. If you know what you are doing right, you can continue that behavior. If you know what you are doing wrong, you can change or modify that behavior in the future. Feedback is also the only way a person can know whether messages sent are interpreted as intended. Without feedback all one can do is assume that the messages have been received correctly.

Feedback comes from two sources. One place that feedback comes from is within yourself. Such feedback is called internal feedback. You are involved in the process of self-evaluation almost all the time. You also receive a great deal of feedback from the world around you. Feedback that comes from any source outside yourself is referred to as external feedback. This is the feedback that you get from your friends, instructor, journeyman, etc.

Feedback can either be positive or negative in nature. Positive feedback involves praise. It is very useful because it lets you know what your strengths are and where you are achieving success. Positive feedback is highly important because it reinforces the behavior that led to the praise. Negative feedback, on the other hand, involves criticism. Such feedback is usually father unpleasant to receive because it highlights your weaknesses instead of you strengths. It is probably the most valuable type of information, however, because it points out areas in which you need to change. Instead of reinforcing your behavior, criticism makes you want to change or modify your words and actions. If viewed properly, negative feedback can provide excellent guidelines for self-improvement.

Advantages of feedback:

1. Supervisors who encourage their employees to give feedback find that feedback increases the accuracy of employee understandings and performance. Misunderstandings often occur because apprentices

honestly think they have understood the journeyman's instructions so well that no feedback is necessary. The few seconds it would take to verify the assignment could save both time and money.

2. Feedback increases employee satisfaction with the job. Everyone likes to feel that their ideas and opinions are of value. When given the opportunity to ask questions or make suggestions, employees tend to feel more a part of the organization and are more willing to take some of the responsibility for accurate communication.

Disadvantages of feedback:

1. Feedback causes people to feel psychologically under attack when feedback seems negative or overwhelming. When judgements of good or bad, and right or wrong are avoided, it reduces the receiver's need to react defensively.

2. Feedback is time consuming. It does take time to make sure that everyone understands, but it takes more time to redo tasks that could have been accomplished correctly the first time.

3. Feedback is difficult to elicit. Many people seek feedback by asking "are there any questions?" Then they can't understand why no one ever has any questions. Asking others if they understand puts pressure on them to say, "Yes I do understand," even when the opposite may be true. When employees are afraid of appearing "stupid" in front of the supervisor, they will pretend to understand whether they do or not. Instead of asking apprentices if they understand, journeymen should ask them what they understand or tell them to summarize what has just been communicated.

Following are listed various suggestions to improve your use of feedback:

1. Tell people you want feedback. Let others know you consider feedback not only useful but necessary to improve your performance.

2. Identify the areas in which you want feedback, specify the topics in which you are most interested.

3. Encourage your journeyman to set aside time for regularly scheduled feedback sessions.

4. Use silence to encourage feedback. Remain silent for at least ten seconds after asking a question.

5. Watch for nonverbal responses.

6. Ask questions, do not assume anything.

7. Use statements that encourage feedback, "So, you feel that....."

A certain amount of criticism on the job is absolutely necessary. Criticism is used by your journeyman to let you know how you can improve your job performance. Criticism can be destructive or constructive depending on what you do with it.

Following are four guidelines that you should follow to respond to criticism in a constructive way.

1. Take the criticism seriously. Assume that the journeyman or instructor is right and that it will help you do a better job.

2. Admit your mistakes. Do not become defensive about your mistakes.

3. Maintain your self-control. Personal characteristics such as patience, cheerfulness, and sense of humor are very valuable in helping you to react properly to criticism.

4. Determine how you can improve. Try to learn something from the experience.

ASSIGNMENT SHEET

THE INTERPERSONAL GAP

In the columns provided below, write about an interpersonal gap that you have experienced at work within the last few weeks. Try to think of an example that had important consequences.

YOUR INTENTION What messages did you want to send?	YOUR ACTION What things did you do and say?	YOUR EFFECT ON PARTNER What was their interpretation and response?
1.		
2.		

ASSIGNMENT SHEET

FEEDBACK COLLECTION AND ANALYSIS

Record everything that is said or expressed to you during a course of three days that would consider to be feedback concerning you or your behavior. Classify each one as being either positive or negative in nature. Finally, indicate how that feedback you received made you feel, and how it will affect your actions in the future.

FEEDBACK RECEIVED	TYPE	EFFECT

ASSIGNMENT SHEET

WHAT IS YOUR FEEDBACK OPINION ?

In groups of four, discuss the following statements. Summarize your conclusion and be prepared to share the information with your classmates.

1. Basically, feedback is judgemental in nature.

2. You probably never encountered feedback before in your life.

3. Actually, feedback is of very little value.

4. In general, people rarely evaluate their own behavior.

5. A compliment would be an example of positive feedback.

6. Positive feedback is worthless because it doesn't teach you anything.

7. Negative feedback is usually rather unpleasant to receive.

8. Negative feedback only created poor attitudes.

9. At work, your journeyman has no right to criticize your performance as an employee.

10. At work, your journeyman has no right to criticize you as a person.

SAMPLE TEST QUESTIONS

COMMUNICATION

Write the letter of the correct answer in the space provided.

_____1. Communication can best be defined as:
a. sharing thoughts, ideas and feeling
b. human talking
c. person-to-person social interchange
d. interdisciplinary speaking

_____2. The person who initiates the message is the:
a. supervisor
b. receiver
c. sender
d. context

_____3. Which of the following is a code that can convey a message?
a. language
b. paralanguage
c. nonverbal
d. all of the above

_____4. A supervisor asks a question and people don't respond, even though they know the answer. What do they lack?
a. motivation
b. noise
c. the right channel
d. source perception

_____5. The method the sender chooses to send the message is the:
a. channel
b. level of abstraction
c. noise
d. stimulus

_____6. The total of a message depends on the language, paralanguage, and nonverbal codes. In order of importance in communicating meaning (from most important to least important) they are:
a. nonverbal, language, paralanguage
b. language, nonverbal, paralanguage
c. language, paralanguage, nonverbal
d. nonverbal, paralanguage, language

_____7. Before a sender even wants to send a message, he or she must be:
a. activated and competent
b. concerned and motivated

c. stimulated and motivated
d. comfortable and stimulated

_____8. You can increase the level of excitement in your voice by:
a. varying your volume and pitch
b. adding more jargon
c. moving more
d. using a sing-song

_____9. 100% communication (receiving 100% of the message):
a. happens most of the time
b. is difficult because of differences in frames of reference
c. depends on the noise
d. happens when you vary your rate and volume

_____10. When I asked, "Who was born in a small town," several students raised their hands. When I asked them how large the town was the answers varied from 500 people to 35,000 people. What communication principle helps explain why a town of 500 was small to one person and a town of 35,000 was small to another?
a. the code that was used
b. differences in frames of reference or perception
c. the paralanguage
d. the denotative meaning

11. Who is responsible for "encoding" the message?

_____

_____

12. Give an example of noise or interference that can detract from the communication process.

_____

_____

13. Give examples when you would use the following communication channels would be appropriate.

Face-to-face _____

_____

_____

Memorandum _____

FAX _____

14. List two things that affect your frame of reference.

a. _____

b. _____

15. In reference to the Interpersonal Gap define the following terms:

Intentions _____

Actions _____

Effects _____

ANSWERS TO SAMPLE TEST QUESTIONS

1. a
2. c
3. d
4. a
5. a
6. d
7. c
8. a
9. b
10. b
11. The person sending the message.

12. machines operating, people talking, phones ringing

13. Face-to-face: important messages. when sender feels receiver can provide an immediate response, complicated messages

    Memo: used to verify written instructions, used as a permanent record

    FAX: used when information is needed sooner than can be provided by mail service

14. education, race, sex, parents, past experiences

15. Intentions: the wishes, wants, hopes, desires, and fears that give rise to actions

    Actions: attempts by the sender to convey a message, whether or not it is received, as well as ways the receiver responds to the message, whether or not the sender intended it to be received that way.

    Effects: a person's inner response to the actions of another

LISTENING AND COMMUNICATION BARRIERS

COMPETENCIES:

1. Receive oral messages accurately.
2. Overcome barriers to effective communication.

OBJECTIVES:

1. Differentiate between hearing and listening.
2. Describe the characteristics of good listening.
3. List barriers that reduce hearing effectiveness at work.
4. Analyze your own listening skills and suggest ways to improve them.
5. Identify barriers in the communication process.
6. Explain how the barriers can be overcome.
7. List rules for giving and receiving instructions.

LEARNING ACTIVITIES:

1. READ the Listening Information Sheet.
   Note: A copy of the sheet is included in this guide and the apprentice guide.

2. PARTICIPATE in a class discussion on the importance of listening in the workplace.

3. READ the Communication Barriers information sheet.
   Note: A copy of the sheet is included in this guide and the apprentice guide.

4. COMPLETE the Listening Skills Improvement Plan assignment sheet.
   Note: A copy of the sheet is included in this guide and the apprentice guide.

5. COMPLETE the Barriers Assignment Sheet.
   Note: A copy of the sheet is included in this guide and the apprentice guide.

APPLICATIONS:

Ask your supervisor to complete the Communication Skills assessment sheet.

EVALUATION/CHECK OUT:

1. Submit your Applications Checklist.
2. Submit your Listening Skills Improvement Plan.
3. Submit your Barriers assignment sheet.

INFORMATION SHEET

LISTENING

Good listening is a combination of hearing, comprehending, and remembering. Most people spend about 80% of their waking day engaged in some sort of communication: reading, writing, speaking, listening or viewing. About 45% of that communication time is spent listening. However, memory fades in a relative short period of time, so we ultimately remember less than one-fourth of what we originally heard. Most people have had no training in listening, despite the fact that we do so much of it.

Of all the communication skills you bring to your job, listening may well be one of the most important. If you cannot receive oral instructions and other messages accurately, speaking to you is of little use and communication fails.

Poor listening can result in costly problems:

- **Accidents that cause physical injury.** ("I didn't hear anyone say that this is a hard-hat area.")
- **Production breakdowns that result in lost time and money.** ("I didn't remember that the boss said I had to insert this from the right side.")
- **Lost sales and customers.** ("What's he so upset about? I'm sure he didn't say he needed it by Friday.")
- **Arguments and misunderstandings between workers.** ("I told you not to lay your tools there!")
- **Discontentment between workers and management.** ("I kept telling the boss that we could have saved time if we had combined the two steps into one. But no one listens to those of us who do the job!")

HEARING AND LISTENING

Hearing an oral message is not the same as understanding and remembering it. Hearing is a physical process. It involves a series of vibrations set in motion by your eardrum.

Listening involves more than just hearing sounds. Not only must a person hear the noise, but he/she must evaluate and understand it. Listening requires mental concentration, hearing does not. To listen effectively, you must focus you mind entirely on what is being said.

Another difference between hearing and listening is that listening is selective, hearing is not. Listening can be turned on and off, whereas hearing cannot be turned off.

BARRIERS TO EFFECTIVE LISTENING

With the listening efficiency rate of only 25% and knowing that most of what is heard is forgotten, think of the millions of dollars wasted in our country each year because people fail to listen. Sometime avoidable accidents are caused by someone's failure to listen. Such was the case in a plant when an employee noticed a puddle of oil that had been spilled on a walkway. The worker called it to the attention of the custodian who was busy filling out a form. The custodian "heard" the message, but he wasn't listening. The puddle did not get cleaned up, and an employee slipped on it, severely spraining his back.

Barriers that interfere with listening may be physical (something wrong with your hearing), but they are more likely to be psychological and result from attitudes, feelings, or lack of awareness. For example these barriers could be:

- Can't hear:	The P.A. system needs to be turned up.
- Don't hear:	The speaker mumbles.
- Won't hear:	He never says anything important.
- Can't understand:	I don't know what she means by that.
- Don't understand:	Why push this button before beginning?
- Won't understand:	I never did like welding.

THE LISTENING PROCESS

Listening involves four distinct processes:

1. Perception: Pay attention to all parts of the message. Be aware of both verbal and nonverbal messages.

2. Comprehension: Determine the meaning of the message. What is the intent of the speaker?

3. Evaluation: Ask questions to make sure you understand the message correctly. Assess the message. Do you need more information?

4. Response: Give verbal and nonverbal responses while listening (nodding head, saying "okay," "I see," etc.). Respond to the entire message after it is completed.

The most commonly recognized problems in listening grow out of one of these processes. Anyone can become a good listener. However improvement involves self-discipline, concentration, and practice. Keep the following principles in mind.

KEYS TO EFFECTIVE LISTENING	THE BAD LISTENER	THE GOOD LISTENER
1. Find areas of interest	Tunes out dry subjects	Asks, "What's in it for me?
2. Judge content not delivery	Tunes out if delivery is poor	Judges content, skips over delivery errors
3. Hold your fire	Tends to enter into argument	Doesn't judge until comprehension is complete
4. Listen for ideas	Listens for facts	Listens for central themes
5. Be flexible	Takes intensive notes using only one system	Takes fewer notes. Uses 4-5 different systems, depending on speaker
6. Work at listening	Shows no energy output, fakes attention	Works hard, exhibits active body state
7. Resist distractions	Distracted easily	Fights or avoids distractions, knows how to concentrate
8. Exercise your mind	Resists difficult material	Uses hard to understand material to exercise mind
9. Keep your mind	Reacts to emotional words	Interprets emotional words, does not get hung up on them
10. Capitalize on fact thought is faster than speech	Tends to daydream with slow speakers	Challenges, anticipates, summarizes and listens to tone of voice.

HOW TO BECOME A GOOD LISTENER

1. Avoid mind wandering. People can listen and think approximately four times as fast as the average person can speak. Therefore, listeners have plenty of time to evaluate and understand what is being said. Often this time is misused by allowing the mind to become distracted instead of

using the time productively. Use this time to analyze what the speaker is saying and anticipate what is going to be said next.

2. Tune in. Sometimes in a conversation, the speaker says something we don't agree with. Immediately we quit listening and start thinking about a rebuttal. Meanwhile we may have missed a statement that is essential to understanding what is being said. One way to avoid this trap is to be aware that it exists and be prepared for it. You might try writing the main points of what the speaker is saying or repeat back to the speaker what you understood him or her to say. "Let me make sure that I understand you; you say that ..." Paraphrasing in this manner forces you to concentrate on what the speaker has said rather than on what you will say to refute it.

3. Anticipate. Mentally stay one jump ahead of the speaker. What will the speaker say next? One word of caution, however. Do not anticipate too much. This practice is called "jumping to conclusions" and can be deadly in terms of effective listening.

4. Have empathy. To be a good listener, a person must be sincerely interested in people. Empathetic listening involves trying to visualize matters from the other person's point of view.

It also means being sensitive to the feelings and attitudes of the person speaking. Some people have a difficult time expressing their true feelings about a matter, and their words do not convey the real meaning of what they wish to express. Assist people in conveying their feelings by techniques such as restating what they say.

5. Keep quiet. It is impossible to listen while you are talking.

6. Help the speaker by being attentive. Sitting in an attentive position, keeping your head forward and maintaining direct eye contact with the speaker puts the speaker at ease by helping him or her know that your are vitally interested in what is being said.

7. Ask questions. The right question at the right time not only encourages the speaker, but also proves that you were listening. Open questions are the best--those which ask who, what, where, when, why or how. Avoid interrupting to ask too many questions.

8. Exercise patience. Give other people a chance to speak. Schedule yourself so you have time to listen patiently in a relaxed manner. If the matter is important and you do not have time to listen attentively, try to reschedule the

conversation for a time when you can give it your full attention.

9. Avoid being critical. When one person is argumentative, the other person almost automatically becomes defensive. A person who is on the defensive is usually not in a mood to communicate freely and openly and may decide not to tell you what you need to hear.

10. Be aware of the physical setting. Try to keep distractions to a minimum. Phones ringing, machines working, and people coming and going can all distract from effective listening.

ASSIGNMENT SHEET

LISTENING SKILLS IMPROVEMENT PLAN

Directions: Complete the self-assessment by finishing each of the statements listed below.

1. Three listening strengths I have are:

a. I _____

For example (give a specific example of a time when you have used that skill)_____

_____.

b. I _____.

For example _____

_____

c. I _____.

For example _____

_____

2. Three bad listening habits I intend to improve are:

a. I _____.

b. I _____.

c. I _____.

3. I intend to implement the plan with the following three people (give the name and relationship to you):

a. _____

b. _____

c. _____

4. Cite three specific example of techniques you tried, what improvement what observed, and what outcomes resulted from your efforts.

a.

b.

c.

INFORMATION SHEET

COMMUNICATION OBSTACLES

People are not always successful in their interactions with others. Breakdowns in communication may occur for a variety of reasons:

1. Giving Poor Instructions

Sometimes we fail to do what another person asks of us because the instructions were vague or confusing. You may think that you are following your supervisor's instructions, but after the project has been completed, find out you have performed it incorrectly.

When giving instructions keep the following principles in mind:

- Check to see if the receivers know specialized terms for things, processes or personnel
- Use a step-by-step organization by breaking the ideas into easy stages
- Use eye contact, facial expression, and gestures to reinforce the verbal message
- Have patience with questions from the receivers and take time to answer them
- Identify from whose point of view the instructions are given when indicating "right" or "left"
- Provide visual explanations or demonstrations if possible
- Provide a favorable environment for listening by reducing noise and outside distractions
- Ask receivers to repeat instructions in order to check understanding

2. Not Following Instructions

Problems occur when people neglect to read or follow directions before proceeding. It has been repeatedly proven that workers would rather attempt a task by the hit-or-miss method than read instructions.

Why do people resist following specific directions when provided? We often assume we know how to do something so there is no need to read the instructions. Or the person's ego might be at stake.

In two special cases it is absolutely essential that employees understand instructions:

- When expensive materials and/or processes can be damaged if instructions are not followed.
- When a person can be injured if instructions are

not followed.

3. Assuming Too Much

The mistake of assuming too much is easy to make. For instance a foreman told one of his workers, "Take the battery out of the trunk of my car and put it in the pickup." The worker did as he was told. He took the battery from the car and put it in the bed of the pickup. Imagine the foreman's surprise when he jumped into the truck to run an errand and it would not start. He assumed the worker knew that he wanted the battery installed under the hood of the truck. He did not provide the worker with enough detailed information to do the job.

4. Bypassing

Bypassing occurs when two people

- Have different meanings for the same word
- Use two different words but actually mean the same thing

For example, your supervisor might tell you to finish up a project as soon as possible. For you "as soon as possible" might mean as soon as you finish the project your are working on now. For your supervisor, however, "as soon as possible" may mean drop everything and do this project now. Even though you are using the same words, communication breaks down because you have different meanings for those words.

5. Tunnel Vision

Tunnel vision assumes that there is only one way to do something--the way we have always done it! People with tunnel vision refuse to listen to new ideas or ways of doing things. They might say things like, "We've tried that before," "Management will never allow it," "We could never afford that."

6. Technical Words

We live in a very specialized, industrialized world. People who work in specialized jobs develop a specialized language called jargon. As long as they talk to each other there are few problems. However, when an apprentice tries to talk to an engineer each using their own jargon, communication can break down.

7. Communicating Information We Don't Have

Have you ever been asked a question you did not know the answer to and given an answer anyway? In this case, you probably tried to give facts and information you did not have, too embarrassed to admit your ignorance. It is human

nature to want others to think we have all the answers.

In today's rapidly changing, high-technology world, it is difficult to keep up with current facts and information. This difficulty can present a problem for supervisors and managers who have been away from actual plant operations too long. He or she may have had accurate, up-to-date technical knowledge but has either forgotten it or not kept current.

Problems occur when people are unwilling to admit their lack of knowledge. A supervisor, who in the past ran a manually-controlled milling machine, might find it difficult to provide sufficient technical information for a machinist operating a computer-controlled milling machine.

ASSIGNMENT SHEET

BARRIERS

Directions: Choose two of the communication barriers listed on the information sheet. Give an example of how these barriers have caused communication breakdowns either at school or where you work. Discuss with a peer how that type of breakdown could be avoided in the future. Be prepared to share your information with the class.

BARRIER	EXAMPLE	HOW IT COULD BE COULD BE AVOIDED
1.		
2.		

ASSIGNMENT SHEET

BARRIERS IN THE WORKPLACE

Directions: Divide into group of five or six. Read the following list of communication barriers aloud. Each person should check several problems that are familiar where they work. Select several problems for discussion. Describe a real situation in which a similar problem occurred. What created the barriers? Suggest specific behaviors that individuals could have used to solve the problem.

_____ 1. Lack of common vocabulary

_____ 2. Conflicting orders received

_____ 3. Message relayed through too many people

_____ 4. Lack of access to a person of higher rank

_____ 5. Lack of listening or hearing

_____ 6. Failure to pay attention to feedback

_____ 7. Personal bias or slanting the message

_____ 8. Jumping to conclusions before having all the facts

_____ 9. Not being informed or aware of particular job responsibilities

_____ 10. Making an assumption

COMMUNICATION SKILLS EVALUATION

This application is designed to give the apprentice and the supervisor a tool to discuss communication skills and areas of improvement.

1. Begin by having the supervisor complete the Communication Skills Checklist.
2. Next the supervisor and apprentice will discuss the checklist. The supervisor should explain why the apprentice was rated as he/she was. This is a good time for the apprentice to ask questions.
3. The apprentice and the supervisor should agree on three areas for improvement.
4. The apprentice completes the action plan in the Apprentice Guide.
5. Three months later, the apprentice and supervisor should discuss whether the apprentice has kept to the action plan.

COMMUNICATION SKILLS CHECKLIST

Apprentice's Name _____

Your Name _____

Date _____

Evaluate the apprentice's communication skills by completing the following checklist. Use the rating schedule listed below:

0 - BELOW EXPECTED: Performance is below minimum expectations. Need for improvement is evident.
1 - SATISFACTORY: Sometimes performance meets expectations, but not consistently.
2 - PROFESSIONAL: Performance consistently meets expectations.

1.	Apprentice shows the ability to work effectively with management.	0	1	2
2.	Apprentice follows instructions accurately.	0	1	2
3.	Apprentice gets along well with fellow workers.	0	1	2
4.	Apprentice listens to work direction carefully.	0	1	2
5.	Apprentice seeks out feedback to improve performance.	0	1	2
6.	Apprentice can accept criticism and change behavior accordingly.	0	1	2
7.	Apprentice communicates ideas, needs, directions or problems in a clearly understandable way.	0	1	2
8.	Apprentice can communicate effectively with customers.	0	1	2
9.	Apprentice accurately records job data.	0	1	2
10.	Apprentice remains aware of new developments in the trade.	0	1	2

COMMUNICATION STRENGTHS:

AREAS FOR IMPROVEMENT:

ACTION PLAN FOR IMPROVING COMMUNICATION SKILLS

What specific communication skills do you want to continue to improve?

1.

2.

3.

What actions will you take to improve them?

1.

2.

3.

What issues or questions do you want to discuss with your supervisor in order to improve those skills?

FEASIBILITY STUDY

COMPETENCY:

Conduct a feasibilty study.

OBJECTIVES:

1. Summarize the steps for inspecting a work site.
2. Identify limitations of a work site.
3. Determine equipment availability.
4. Establish options.
5. Recommend preferred solutions.

LEARNING ACTIVITIES:

1. LISTEN to a class lecture presented by your instructor on feasibility study.

2. PARTICIPATE in class discussion on feasibility study.

3. COMPLETE the Feasibility Study assignment sheet.
   Note: A copy of the sheet is included in this guide and the apprentice guide. Provide your students with examples of various sheet metal projects. Your students will be responsible for conducting a feasibility study using their current work site to draw their information from. Examples might be:

   a. Fabricate a guard
   b. Fabricate a sheild
   c. Create a cage to cover a transformer
   d. Repair duct work

APPLICATIONS:

1. Inspect the work site.
2. Identify limitations of the work site.
3. Establish project options.
4. Recommend best solution.

EVALUATION/CHECK OUT:

Orally present your findings from the Feasibility Study you completed to your classmates. Critique your classmates study as well.

ASSIGNMENT SHEET

FEASIBILITY STUDY

An important area of sheet metal work is developing the ability to properly conduct a feasibility study for a potential project. Your instructor will give you an example project. Your assignment is to complete the following feasibility study using your current work site to draw your information from. Be prepared to orally present your findings to your classmates.

1. Inspect the work site of desired project. List the obvious requirements to properly complete the project. Include factors such as location of project, size of project, area of work site, limitations of work site, safety precautions and limitations of working area.

   a. _____

   _____

   b. _____

   _____

   c. _____

   _____

   d. _____

   _____

   e. _____

   _____

   f. _____

   _____

   g. _____

   _____

   h. _____

   _____

   i. _____

   _____

2. List the possible options available.

a. _____

_____

b. _____

_____

3. For each option, complete the following chart to determine what materials are needed and the availability of the materials to complete the project.

OPTION A:

MATERIAL	MATERIAL AVAILABILITY

OPTION B:

MATERIAL	MATERIAL AVAILABILITY

81

4. For each option, complete the following chart to identify the processes required, machine used and machine availability needed to complete the project.

OPTION A:

PROCESS	MACHINE	MACHINE AVAILIBILITY

OPTION B:

PROCESS	MACHINE	MACHINE AVAILIBILITY

5. Comment on your personal recommendations.

a. _____

_____

b. _____

_____

82

PLANNING

COMPETENCY:

Effectively plan the project.

OBJECTIVES:

1. Prepare sketches and drawings of projected concept.
2. Demonstrate the ability to transform the concept to paper.
3. Calculate volumes and capacities.
4. Apply mathematical formulas properly.
5. Calculate sizes needed for a specific project.
6. Use a calculator to perform mathematical functions.
7. Explain situations when a computer would be implemented.
8. Develop an appropriate material list.
9. Organize a feasible work schedule.
10. Estimate cost requirements.
11. Analyze labor, material and overhead expenses.
12. Asses manpower requirements.
13. Estimate time required.
14. Identify tasks to be performed.

LEARNING ACTIVITIES:

1. READ and STUDY the Developing the Plan information sheet.
   Note: A copy of the sheet is included in this guide and the apprentice guide.

2. READ pages 383-400 in Practical Sheet Metal Layout, Specialty Items Used Today by Richard Budzik.

3. READ pages 366-382 in Practical Sheet Metal Layout, Specialty Items Used Today by Richard Budzik.

4. PARTICIPATE in a class lecture and discussion on Project Planning.

5. COMPLETE the Project Plan Form Sheet assignment sheet.
   Note: A copy of the sheet is included in this guide and the apprentice guide. You may wish to assign different ideas if the feasibility study project is not appropriate.

6. BRING TO CLASS samples of planning sheets currently being used in your place of employment.
   Note: You may want to display them in your classroom.

7. OPTIONAL: VIEW the videotapes assigned by your instructor.
   Note: Several tapes are listed in the Resource section of this guide.

APPLICATIONS:

1. Sketch or draw the project concept.
2. Develop an appropriate material list.
3. Estimate cost requirements.
4. Estimate time requirements.
5. Schedule work.

EVALUATION/CHECK OUT:

1. Submit your assignment on completing a Project Plan Form Sheet.

LEARNING MATERIALS:

Copies of the text, Practical Sheet Metal Layout, Specialty Item Used Today by Richard Budzik.

RESOURCES:

1. Audio-Visual Material:
   The following films cover the area of Shop Production and Organization. They can be purchased or rented from:

   University if Wisconsin-Extension
   Bureau of Audio-Visual Instruction (BAVI)
   1327 University Avenue
   Madison, Wisconsin 53706
   608-262-1644

   A. "Creative Problem Solving: How to Get Better Ideas" The brain storming technique for problem solving is demonstrated on this film.

   B. "Delegating"

   C. "Finding Time"

2. Handbooks:
   Sheet Metal Estimating Handbook by Wendes is available from Snips Book Department, 407 Mannhein Road, Bellwood, IL 60104. (312-544-3870)

3. Software:

A. "Costimator Computor Aided Cost Estimating System" is available from Manufacturers Technologies, 59 Interstate Drive, West Springfield, MA 01089. (413-733-1972) This software assures you of a level of speed, accuracy, and consistency that manual estimating can never achieve. Easy, step-by-step, multiple choice options allow the user to walk through the estimating process.

B. "The SuperProject Series" is available from Computer Associates, 1240 McKay Drive, San Jose, CA 95131. (800-533-2070) This software is used to assist project management. The smallest to the largest complex projects imaginable are easily handled with this program. A free demo diskette is available.

INFORMATION SHEET

DEVELOPING THE PLAN

The experienced craftsperson plan their job carefully before starting to work. Sheet metal workers should plan their projects with the same concern. The planner uses their past experience and education when developing a plan. They call upon their knowledge of mathematics, machines, machine functions, tooling types, and materials. Their own knowledge must be supplemented with data from other sources. They must seek out information from textbooks, technical handbooks, and from the personal experiences of fellow workers. They must also consult technical sources for new methods when they provide greater benefits than the established ones.
All this is necessary in order to devise a sound and logical sequence when developing the plan.

A good plan includes the following information:

1. A feasible work schedule created to allow adequate time to complete the project.

2. A working drawing of the project; this could be a carefully sketched freehand or a pictorial drawing.

3. A bill of materials.

4. A list of the sequential steps for making each component within the project.

5. A cost estimation required to complete the project.

6. A time estimation needed to finish the project.

PROJECT SCHEDULE:

Any project, no matter what size, needs a written set of schedules. The process of scheduling forces determination, first, of the order in which events must occur, and second, of the time it will take to do them all. Schedules coming out of the planning process should be in a form suitable for immediate use.

Following are major steps in project scheduling:

1. Define the project objectives.
2. Divide the project into manageable parts.
3. Decide, in detail, what has to be done and in what sequence.
4. Estimate the duration of each separate activity.
5. Use the activity duration estimates to calculate the

estimated project duration, and the relative significance of each activity to timescale objectives.
6. Reconcile the planned project with the resources that can be mustered.
7. Assign tasks to individuals, by name.

SKETCHING AND DRAWING:

If plans are not available for the project you want to make, your first task will be to prepare working drawings. The drawings may be sketched or made with drafting instruments. One of the most important functions of the sketcher's job is thinking; visualizing what it is they want to create and then producing their drawings or sketches so that they express their thoughts and decisions. Their ability to visualize is a critical asset when they draws or designs. A sketcher also needs to keep their drawing simple, yet inclusive. Read pages 383-400 in Practical Sheet Metal Layout, Specialty Items Used Today by Richard Budzik for more information on sketching and drawing.

BILL OF MATERIALS:

You must have the correct metal before you can make a metal project; therefore, it is necessary to know how to specify and order metals. The working drawing gives all of the information needed to make a bill of materials.

A bill of materials should show:

1. The parts of the project, identified by numbers or letters.
2. The number of pieces needed for each part.
3. The size of the material.
4. The shape and kind of material.
5. The standard parts used in the project.
6. The unit cost of the material; the cost per pound, per foot, per square foot, etc.
7. The total cost of the materials.

A standard part is a part that is made by several companies and is the same no matter who makes it. Hardware such as bolts, nuts, rivets, screws and washers, that are made to standard sizes and shapes, are standard parts. Use catalogs to get information about standard parts and materials.

Standard stock is the material that is used in the manufacture of finished projects. Steel as it comes from the steel mill is standard stock. Standard stock is purchased from metal wholesalers who stock each shape in many sizes. The size given on the bill of materials is the size of the

standard stock that you will order. The size given on the working drawing is the finished size. The size of any part, as given on the working drawing, must have added to it the extra metal which is needed for finishing the project to size.

Standard stock is specified or described as follows:

Flat sheet or Strip
Thickness x width x length, as follows:
1/8" x 1 3/4 " x 4 1/4"

Square Bar
Thickness x width x length, as follows:
1" x 1" x 4 1/4"

Round Bar
Diameter x length, for example:
2" Dia. x 4 1/4"

Hexagonal and Octagonal Bar
Distance across flat sides x length, for example:
1 1/4 " x 4 1/4"

Tubing
Outside dimensions x wall thickness x length, as:
7/8" Dia. x .049 wall x 12: and
1" x 1" x .062 wall x 18 "

Structural Shapes
Overall cross-sectional dimensions x shape x wall thickness x length, for example:
1 1/2 " x 1 1/2 " angle x 3/16" wall x 36"

Metal wholesalers normally sell all metals by weight. Prices are quoted as cost per hundred pounds.

STEPS OF PROCEDURE FOR COMPLETING EACH PROJECT COMPONENT:

A plan of procedure is a list of operations, in their sequential order, one proposes to follow in the construction of each component in their project. Throughout this procedure, the planner may question each sequence of work being analyzed. The questioning can be based upon key words such as: why, what, where, when, who and how. The many possibilities should be carefully examined and evaluated. This requires clear thinking and a great deal of imagination. The application of a checklist to guide the questioning is invaluable. The following checklist may be useful:

Basic Principles:
- Arrange steps in best order
- Reduce number of steps

- Make steps as economical as possible
- Combine steps if economical
- Shorten moves

1. Can any step be eliminated?
   a. as unnecessary
   b. by using new equipment
   c. by changing the sequence of operations
   d. by changing the project design

2. Can any operation be combined with another? Are there possible changes to make this feasible in:
   a. running two or more parts at a time
   b. equipment
   c. tooling
   d. project design

3. Can any operation be made easier or shorter?

4. Can a computer be helpful in any operation?

5. Can any operation be adapted to numerical control machining?

Diligence, work experience, interest in learning, and positive work attitudes are among the many virtues that create skill in determining the sequence of operations. Following simple, sound approaches to problems will result in satisfactory solutions. Utilization of past work experience gained through observation and personal contact will result in improved planning.

COST ESTIMATION:

Apprentices are not often given the responsibility of estimating the total cost of a given job, however, it is a fact that the most qualified estimators have trade experience. Estimating basically consists of accumulating details, or the process of calculating all the costs which will enter into the particular job in order to arrive at a total. Since the estimate is naturally made before doing the job, it can only be an "educated guess." Read pages 366-382 in Practical Sheet Metal Layout, Specialty Items Used Today by Richard Budzik for more information on cost estimating.

CALCULATION OF TIME:

The planner must rely on their work experience and personal observations to forecast operational time. The time needed for unknown operations can be estimated from the planner's ideas on the application and from formulas available from numerous industry sources. The following elements must be

considered in the calculation of time required to perform an operation.

1. Setup time: This time includes all the time necessary to prepare the machine for the production of the part. This time includes:
   a. Teardown of previous setup and cleaning of machines.
   b. Time to study blueprint, process sheet, etc.
   c. Time to obtain tools.
   d. Time to install tools.
   e. Time to adjust machine and cutters.
   f. Machining the initial part.
   g. Gauging the initial part.

   The setup time should be the same every time it reappears in the shop. An initial good setup eliminates the need for readjustment later.

2. Run time: The run time includes all the time required to perform all the handling elements plus machining elements. The run time is frequently called "floor-to-floor time."

   The handling element is comprised of all the necessary physical moves made by the operator in preparing and disposing of the part. They include picking up the part, placing it in the fixture, clamping the part, positioning the tool for cutting, clearing the tool after cutting, releasing the part form the fixture, and returning the part to the original container.

   The machining element can be readily obtained through data or by calculation. Before estimating the cutting time, the following questions must be asked:
   a. What cutting speed should be used?
   b. What feed should be used?
   c. What spindle speed or rpm?
   d. How many cuts required?

   Run time is calculated per cutting time in minutes. Minutes are converted to decimal standard hours.

3. Allowances include:

   a. Fatigue: Excessive use of mind or muscles produces a feeling of tiredness, decreasing the capacity to do work.
   b. Cutter change allowance: The time needed to replace a tool varies with the type of tool, tolerances to be held, and the life of the tool. The time needed to change a tool is relatively short compared with the time needed to resharpen it.

c. Inspection: Any appreciable wear on the cutting tool, tool holder, locating device, or machine affects size. It is, therefore, necessary to inspect parts occasionally and readjust the tool to compensate for the wear.

ASSIGNMENT SHEET

COMPLETED PROJECT PLAN FORM SHEET

You recently completed a feasibility study for an assigned project. Now, using your results and the best option you have chosen, complete a project plan for that assigned project. Fill in the following form sheet with the appropriate information.

PROJECT PLAN SHEET

Name _____

Name of Project _____

Estimated Time _____ Actual Time _____

BILL OF MATERIALS

Part Name	No. of Pieces	Material	Size T W L	Unit Cost	Total Cost

Total Cost _____

PLAN OF PROCEDURE

List the operations to be performed in their sequential order. Indicate the tools and equipment needed to accomplish the job.

No.	Operations	Tools and Equipment

MATERIAL LIST

MATERIAL LIST

COMPETENCIES:

1. Use different types of metals.
2. Choose materials for a specific job.

OBJECTIVES:

1. List the common properties of metals.
2. Recognize, by sight and feel, different types of metals.
3. Differentiate among metals alloys.
4. Use numbering systems and color codes to identify metals, classify carbon steels, and identify standard metal shapes.
5. Define terms related to basic metals and metallurgy.
6. Match metal abbreviations with their meanings.
7. Classify metals according to their characteristics and uses.
8. Identify metals by appearance, color and corrosion resistance.
9. List common coated metals and the coating of each.
10. Identify and use the proper gauge to determine metal thickness and weight.
11. Match properties of metals with their application.
12. Identify the mechanical strengths of various metals.

LEARNING ACTIVITIES:

1. READ the "Introduction to Metals" and "Measuring Sheet Metal" information sheet
   Note: A master copy is included in this guide.

2. EXAMINE metal samples.
   Note: Display samples of several metals on a table in the room. Identify each metal with a detachable I.D. card. After students have viewed the metals and studied them, you may remove the cards and have the students identify the metals based on sight and feel.

3. WATCH your instructor demonstrate the use of the U.S. Standard and wire guage for measuring different types of metals.

4. USE a U.S. Standard and wire guage to determine the thickness of metals.
   Note: Have students work in teams to to determine the thickness of the sample metal pieces. You may use the Measuring Sheet Metal Assignment sheet included in this guide.

5. PARTICIPATE in a class discussion about uses and properties of metals.

6. COMPLETE the Thickness and Weight assignment sheet.

7. VIEW the Materials Testing videotape.
(NOTE: Several other tapes are also suggested in the Resource section.)

EVALUATION/CHECK OUT:

1. IDENTIFY various metals and their characteristics.
2. DEMONSTRATE your knowledge of the objectives in a test situation.

EQUIPMENT AND SUPPLIES:

1. Various types of metals with detachable labels.
2. Several U.S. Standard and wire gauges.
3. Examples of small pieces of sheet metal of different gages. Several sets of different thicknesses can be assembled and used for purposes of identification.

LEARNING MATERIALS:

1. Copies of the "Properties of Metal" and "Measuring Sheet Metal" information sheet. One for each student. A master copy is included in this guide.
2. Copies of the "Thickness and Weight" assignment sheet. One for each student. A master copy is included in this guide.
3. Copies of a test on Material List. Several sample questions are included in this guide.
4. Copies of the tables on thickness and weight. One for each student. A master copy is included in this guide.
5. Optional: Copies of the Measuring Sheet Metal assignment sheet. A master copy is included in this guide.

RESOURCES:

1. Audio-Visual Materials:
   A. "Materials Testing," from Wisconsin Foundation for Vocational Technical and Adult Education, 5402 Mineral Point Road, Madison, WI, 53705. (608-231-3626)

   This videotape covers types of metal testing. It is 10 minutes long. It is from the Manufacturing Materials and Processes series.

B. "Metallurgy" from Caterpillar Tractor Company Training Center, 100 N. E. Adams Street, Peoria, IL 61629, order number PEGCO506 - 00.

This videotape shows the different types of metallurgy, the determining factors between iron and steel; and the methods and importance of heat treatment.

C. "Introduction to Sheet Metal" a videotape from General Electric available at Moraine Park Technical College (TS 250 S54)

This videotape discuss the basics of sheet metal: thickness, codes and specifications, and advantages over other tpes of metal.

2. Books:

A. Sheet Metal Shop Practice by Leo A. Meyer. This book covers all of the topics for this unit and gives several suggestions for additional classroom activities.

B. Sheet Metal Technology by Richard Budzik. This book also provides information on all of the topics in this unit. It makes a good resource for both student and teacher.

3. Handbooks:

A. "Stainless Steel, Strip and Plate" from J&L Specialty Products Corporation, P.O. Box 3373, 1600 West Carson Street, Pittsburg, PA 15230-3373. (1-800-553-9235)

B. "Design Guidelines For the Selection and Use of Stainless Steel" from the Committee of Stainless Steel Producers, American and Steel Institute, 1000 16th Street, N.W., Washington, D.C. 20036

C. "Carpenter, Stainless Steels: Selection, Alloy Data and Fabrication" Carpenter Technology Corporation, P.O. Box 14662, Reading, PA 19612-4662. This booklet costs $8.00.

INFORMATION SHEET

INTRODUCTION TO METALS

Choosing the proper metal for a project is very important. A finished job may be a masterpiece, but it would be virtually useless if the wrong materials were used.

The metals used in fabrication can be placed into two groups: ferrous metals (the irons) and Non-ferrous metals (no iron present). Each group inlcudes several types of metal for different uses.

FERROUS METALS
When selecting a ferrous metal for fabrication, consider the following:

- What will the finished product be used for?
- How does the metal react to heat and vibrations?
- Does the finished product require weldments?
- How will the metal machine?
- How will the metal react to various welding procedures?

Common ferrous metals include:

- Low carbon steels
- Low alloy steels
- Steel castings
- Cast iron (ductile, gray, malleable)

Low alloy steels are used most often for fabrication.

NONFERROUS METALS
Nonferrous metals are more expensive than ferrous metals, but they withstand exposure to outside elements more readily. Nonferrous metals also require different fabrication techniques.

Common nonferrous metals include:

- Aluminum
- Brass
- Copper
- Lead
- Magnesium
- Nickel
- Monel

PROPERTIES OF METAL

When choosing material for a specific job, it is important to consider the properties of various metals.

STRENGTH
Strength is a general term referring to the ability of metal to hold loads without breaking. For example, steel is strong, but lead is weak.

DUCTILITY
Ductility refers to the ability of the metal to be stretched without breaking. Soft iron, soft steel and copper are ductile metals. Ductility is an important factor when bending metals.

MALLEABILITY
Malleable metal can be rolled forged or hammered without cracking or breaking. Copper is a malleable metal.

HARDNESS
Hard metal resists penetration, wear or cutting action.

TOUGHNESS
Metal that is tough will not tear or shear easily and will stretch without breaking. Rolled sheet steel is tough.

BRITTLENESS
Brittle metal shatters easily. Such materials as cast iron, glass and very hard steel (files) are brittle.

COLD-WORK
If a peice of metal is formed while cold, the metal is said to be cold-worked. Practicially all the work a sheet metal worker does on metal is cold-work. Cold-working causes the metal to become hardened and brittle. If the metal is cold-worked too much--that is, if it is bent too sharply, hammered too much, or bend back and forth at the same place too often--it will crack or break. Usually the more malleable and ductile a metal is, the more cold-working it can stand before cracking or breaking. For this reason, some heavier metals should have a radius when forming them in the brake.

ALLOY
A mixture or compound formed by melting one or more metals together with another metal.

ANNEALING
A process by which a metal or metals my be softened by heating and either slow cooling or quenching.

INFORMATION SHEET

CHARACTERISTICS OF STAINLESS STEEL

DURABILITY	Permanent Painting or protective coating not necessary Not ordinarily affected by mortar or concrete Compatible with other building materials
WEATHERABILITY	Will not deface, tarnish, or fade in most atmospheres
APPEARANCE	Will not stain or discolor adjacent surfaces Blends with other materials May be painted if desired
STRENGTH	Resists wind damage, denting and abuse Protects against fire by maintaining strength at elevated temperatures Good resistance to metal fatigue
EXPANSION	Thermal expansion of chromium-nickel stainless steel falls near the middle of the range of common roofing and flashing metals
WORKABILITY	Can be readily formed, joined, and installed using gages suggested Joints are easily soldered and reliably watertight
MAINTENANCE	Requires little or no maintenance Normal rainfall will usually keep surface clean
AVAILABLITY	Readily available locally

INFORMATION SHEET

MEASURING SHEET METAL

Metal sheets, wire, band ron, and angle iron are the most widely used materials in the sheet metal trade. The sheets may be plain, ribbed or corrugated and made of such metals as black iron, tin plate, copper, aluminum, stainless steel, monel etc.

Sheet thickness are designated by a series of numbers called gages. Several systems are in use at the present time for different kinds of metals, but iron and steel sheets should be designated by the U.S. Standard Gage. The U.S. Standard Gage was adopted by congress on March 3, 1893. The numbers vary from 0 to 36 gage. A 0 gage thickness is .3125' thick and 36 gage is .007" thick. In other words, the higher the number, the lighter the metal.

Note that in the sheet metal trade, the word "gage" also refers to a device for measuring the thickness (or gage) of sheets or devices which act as stops when marking, cutting, or forming metal.

Below is a drawing of a gage used to measure the thickness of metal sheets. It is a disc-shaped piece of metal having slots of a width to correspond to the U.S. gage numbers. The numbers from 0 to 36 are marked on the back.

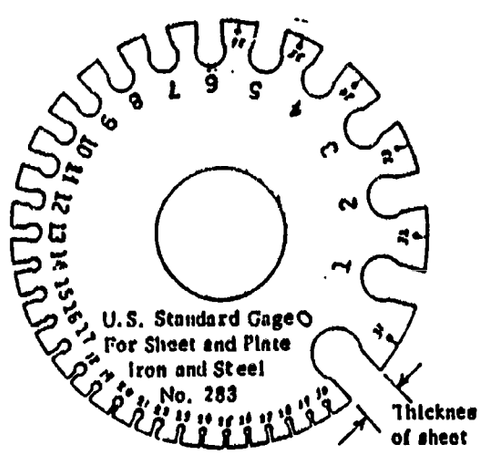

U.S. STANDARD GAGE

The thickness of sheets can also be measured with a micrometer and this measurement compared with the table of gages to select the correct gage number of the sheet.

A metal with a gage reading of 8 to 38 gage is called sheet stock. A gage reading of 8 through the 0's is known as plate stock. Then the gage can be omitted and termed as: 1/4 inch plate, 3/8 inch page, 1/2 inch plate, etc.

OTHER GAGES

The American Steel and Wire Gage is used for measuring the thickness of sheets and wire made of nonferrous metals such as copper, brass, and aluminum (sometimes referred to as the Brown and Sharpe gage.)

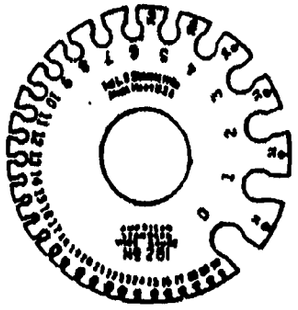

There are other specialty gages such as the English standard Wire gage and the American Screw Company gage, but the American and U.S. Standard are the most frequently used in sheet metal work.

INFORMATION SHEET

GALVANIZED CARBON STEEL SHEETS

Gauge #	Lbs Per Sq Ft (Approximate)	Thickness Equivalent	Thickness Range in Inches
8	7.03125	0.1681	.1756-.1607
9	6.40625	0.1532	.1606-.1458
10	5.78125	0.1832	.1457-.1308
11	5.15625	0.1233	.1307-.1159
12	4.53125	0.1084	.1158-.1009
13	3.90625	0.0934	.1008-.0860
14	3.28125	0.0785	.0859-.0748
15	2.95875	0.0710	.0747-.0673
16	2.65625	0.0635	.0672-.0606
17	2.40625	0.0575	.0605-.0546
18	2.15625	0.0516	.0545-.0486
19	1.90525	0.0456	.0485-.0426
20	1.65625	0.0396	.0425-.0382
21	1.53125	0.0366	.0381-.0352
22	1.40625	0.0336	.0351-.0322
23	1.28125	0.0306	.0321-.0292
24	1.15625	0.0276	.0291-.0262
25	1.03125	0.0247	.0261-.0232
26	0.90625	0.0217	.0231-.0210
27	0.84375	0.0202	.0209-.0195
28	0.78125	0.0187	.0194-.0180
29	0.71875	0.0172	.0179-.0165
30	0.65625	0.0157	.0164-.0150
31	0.59375	0.0142	.0149-.0138
32	0.56250	0.0134	.0137-.0131

INFORMATION SHEET

CARBON STEEL AND BRASS SHEETS

Carbon Steel		
USS Gauge #	Thickness Equivalent	Lbs Per Sq Ft (Approximate)
1	.28125	11.250
2	.26562	10.620
3	.2391	10.000
4	.2242	9.375
5	.2092	8.750
6	.1943	8.125
7	.1793	7.500
8	.1644	6.875
9	.1494	6.250
10	.1345	5.625
11	.1196	5.000
12	.1046	4.375
13	.0897	3.750
14	.0747	3.125
15	.0673	2.812
16	.0598	2.500
17	.0538	2.250
18	.0478	2.000
19	.0418	1.750
20	.0359	1.500
21	.0329	1.375
22	.0299	1.250
23	.0269	1.125
24	.0239	1.000
25	.0209	.875
26	.0179	.750
27	.0164	.687
28	.0149	.625
29	.0135	.526
30	.0120	.500

Brass		
American Gauge #	Thickness Equivalent	Lbs Per Sq Ft (Approximate)
1	.2893	12.75
2	.2576	11.35
3	.2294	10.11
4	.2043	9.002
5	.1819	8.015
6	.1620	7.138
7	.1443	6.358
8	.1285	5.662
9	.1144	5.041
10	.1019	4.490
11	.1907	3.997
12	.0808	3.560
13	.0720	3.173
14	.0641	2.825
15	.0571	2.516
16	.0508	2.238
17	.0453	1.996
18	.0403	1.776
19	.0359	1.582
20	.0320	1.410
21	.0285	1.256
22	.0254	1.119
23	.0226	.9958
24	.0201	.8857
25	.0179	.7887
26	.0159	.7006
27	.0142	.6257
28	.0126	.5552
29	.0113	.4979
30	.0100	.4406

INFORMATION SHEET

COPPER AND ZINC SHEETS

Copper		
Gauge #	Thickness Equivalent	Lbs Per Sq Ft (Approximate)
1	.300	13.94
2	.284	13.20
3	.259	12.04
4	.238	11.07
5	.220	10.22
6	.203	9.420
7	.180	8.360
8	.165	7.660
9	.148	6.875
10	.134	6.225
11	.120	5.575
12	.109	5.065
13	.095	4.410
14	.083	3.860
15	.072	3.338
16	.065	3.020
17	.058	2.695
18	.049	2.280
19	.042	1.952
20	.035	1.627
21	.032	1.484
22	.028	1.302
23	.025	1.162
24	.022	1.022
25	.020	.928

Zinc		
Gauge #	Thickness Equivalent	Lbs Per Sq Ft (Approximate)
24	.125	4.70
23	.100	3.75
22	.090	3.37
21	.080	3.00
20	.070	2.62
19	.060	2.25
18	.055	2.06
17	.050	1.87
16	.045	1.68
15	.040	1.50
14	.036	1.35
13	.032	1.20
12	.028	1.05
11	.024	.90
10	.020	.75
9	.018	.67
8	.016	.60
7	.014	.52
6	.012	.45
5	.010	.37
4	.008	.30
3	.006	.22
-	—	—
-	—	—
-	—	—

INFORMATION SHEET

STAINLESS STEEL SHEETS

Thickness Ordering Range in Inches	Gauge #	Thickness Equivalent	Lbs Per Sq Ft (Approximate) Cold Rolled
.161 to .176	8	.17187	7.2187
.146 to .160	9	.15625	6.5625
.131 to .145	10	.140625	5.9062
.115 to .130	11	.125	5.5200
.009 to .114	12	.109375	4.5937
.084 to .098	13	.09375	3.9374
.073 to .083	14	.078125	3.2812
.066 to .072	15	.0713125	2.9521
.059 to .065	16	.0625	2.6250
.053 to .058	17	.05625	2.3625
.047 to .052	18	.050	2.1000
.041 to .046	19	.04375	1.8375
.036 to .040	20	.0375	1.5750
.033 to .035	21	.034375	1.4437
.030 to .032	22	.03125	1.3125
.027 to .029	23	.028125	1.1813
.024 to .026	24	.025	1.0500
.0199 to .023	25	.021875	0.9187
.0178 to .0198	26	.01875	0.7875
.0161 to .0177	27	.0171875	0.7218
.0146 to .0160	28	.015625	0.6562
.0131 to .0145	29	.0140625	0.5906
.0115 to .0130	30	.0125	0.5250
.0105 to .0114	31	.0109375	0.4594
.0095 to .0104	32	.01015625	0.4265

INFORMATION SHEET

GALVANIZED AND BLACK IRON

GALVANIZED AND BLACK IRON			
GAGE (U. S. STANDARD)	APPROXIMATE THICKNESS (INCHES)	LBS/SQ FT GALVANIZED	LBS/SQ FT BLACK IRON
7	0.1793	—	7.500
8	0.1644	—	6.875
9	0.1494	—	6.250
10	0.1345	5.7812	5.625
11	0.1196 1/8"	5.1562	5.000
12	0.1046	4.5312	4.375
13	0.0897	3.9062	3.750
14	0.0747	3.2812	3.125
15	0.0673	2.9687	2.812
16	0.0598 1/16"	2.6562	2.500
17	0.0538	2.4062	2.250
18	0.0478	2.1562	2.000
19	0.0418	1.9062	1.750
20	0.0359	1.6562	1.500
21	0.0329 1/32"	1.5312	1.375
22	0.0299	1.4062	1.250
23	0.0269	1.2812	1.125
24	0.0239	1.1562	1.000
25	0.0209	1.0312	0.875
26	0.0179	0.9062	0.750
27	0.0164	0.8437	0.688
28	0.0149 1/64"	0.7812	0.625
29	0.0135	0.7187	0.563
30	0.0120	0.6562	0.500

INFORMATION SHEET

ALUMINUM

Thickness and Size, Inches	Mill Finish							
	1100		3003		5052			5086
	-0	-H14	-0	-H14	-0	-H32	-H34	-H32
.190 x 36 x 96				X*		X		
48 x 120				X*				
48 x 144		X		X*	X	X*		
60 x 144				X*				
.160 x 48 x 144						X		
.125 x 36 x 96	X			X		X*		
48 x 96				X*		X*		
48 x 120				X*				
48 x 144		X	X	X*	X	X*	X*	X
60 x 144				X*		X*		
.100 x 48 x 144						X*		
.090 x 36 x 96						X*		
48 x 96						X		
48 x 144					X	X*	X*	
.080 x 48 x 96						X		
48 x 144						X*	X	
.063 x 36 x 96		X						
48 x 96						X*		
48 x 144					X	X*	X	
60 x 144				X				
.050 x 48 x 144						X*		
.040 x 48 x 144						X		
.032 x 48 x 144						X		

X — Standard Items

X* — Plant stocks available

O — Indicates sheet has been annealed

H — Indicates sheet has been strain-hardened

(NOTE: The digit 1 following the letter H means sheet has been strain-hardened only, or subjected to stress to improve strength and hardness. Second digit indicates hardness on a scale of 0 to 7, so a 3003-H14 indicates the sheet has been strain-hardened only and is medium hard. The 3003-H14 aluminum sheet is the most commonly used sheet in the industry.)

ASSIGNMENT SHEET

MEASURING SHEET METAL

DIRECTIONS: Your instructor will have selected pieces of metal and arranged them on a table. Each piece of metal will be tagged with a number. Measure the thickness of the metal and record your answer.

1. _____

2. _____

3. _____

4. _____

5. _____

6. _____

7. _____

8. _____

9. _____

10. _____

ASSIGNMENT SHEET

THICKNESS AND WEIGHT

DIRECTIONS: Use the trade tables to answer the following questions.

1. A sheet of galvanized iron checks out to be 18 gauge. What is its thickness rage in inches?

2. A sheet of galvanized iron has a thickness range of .0380 inches. What is the gauge number?

3. A sheet of carbon steel check out to be 10 gauge. What is its approximate thickness in inches?

4. Which would weigh the most, a square foot of 10 gauge sheet metal or a square foot of 20 gauge sheet metal?

111

5. What would be the gauge number of a sheet of zinc that had an approximate thickness of .040 inches?

6. A job calls for stainless steel sheet no thinner than .036 inches and not thicker than .040 inches. What gauge number of stainless steel should be ordered?

7. What would weigh the most, a square foot of 10-gauge stainless stell or a square foot of 20-gauge stainless steel?

8. Job specifications call for aluminum sheet #3003 with a thickness of .125 inches. What is the minimum size sheet that should be ordered to cover a frame that is 42" x 86"?

INFORMATION SHEET

SAE - AISI STEEL CLASSIFICATION SYSTEM

Type of steel (alloying elements)	*Number designation*
Carbon steels	1xxx
Plain carbon	10xx
Free cutting (screw stock)	11xx
Free cutting, manganese	X13xx
High-manganese steels	T13xx
Nickel steels	2xxx
0.50% nickel	20xx
1.50% nickel	21xx
3.50% nickel	23xx
5.00% nickel	25xx
Nickel-chromium steels	3xxx
1.25% nickel, 0.60% chromium	31xx
1.75% nickel, 1.00% chromium	32xx
3.50% nickel, 1.50% chromium	33xx
3.00% nickel, 0.80% chromium	34xx
Corrosion- and heat-resisting steels	30xxx
Molybdenum steels	4xxx
Chromium	41xx
Chromium-nickel	43xx
Nickel	46xx and 48 xx
Chromium steels	5xxx
Low-chromium	51xx
Medium-chromium	52xxx
Corrosion- and heat-resisting	51xxx
Chromium-vanadium steels	6xxx
Tungsten steels	7xxx and 7xxxx
Silicon-manganese steels	9xxx

INFORMATION SHEET

METALS MOST COMMONLY USED IN SHEET METAL WORK

Metal	Characteristics	Rust Resistance	Typical Uses
Galvanized Iron	Iron or steel sheets coated with molten zinc; bright spangled appearance when new	Excellent	Gutter and cornice work furnace and air conditioning work, duct work, guards and blow pipe work
Black Iron	Uncoated sheets rolled from iron or a soft steel of low carbon content; looks bluish near the sides of the sheet and have a silvery appearance near the center	None; must be painted when job is finished	Pans, stove pipes, hoods safety gaurds, tanks, heat exchangers
Aluminum	Has a protective coating of oxide film; smooth or decorative finishes or a highly polished anodized finish; usually light and easy to handle	Excellent	Gravel guard, finish siding for campers and mobile homes
Stainless Steel	A steel alloyed with nickel and chromium; its beauty and corrosion resistance, is its great advantage	The best of all metals	Labs, hospitals, meat packing plants, restaurants, and applications where cleanliness and attractiveness are required
Paint Grip Iron	A cold rolled iron electroplated with a zinc process and ready to paint	Fair for a time, but still requires paint	Sign work, roof metals and general commercial constuction
Brass	Made by melting copper and zinc together; comes in a thin sheet called shim stock	Excellent	Automotive shops, trophies, brass rods for brazing and decorative applications
Copper	Attractive, reddish colored metal; has high resistance to corrosion but very expensive; comes in wire tube, and sheet; soft and easy to work with	Excellent	Roofing flashings, ornamental roofs, gutters. downspouts, hoods

Zinc	Usually used as an alloy or a coating for other metals	Excellent, but will tarnish	Additives to cut acids and as coatings for other metals
Expanded Metal	Made from flat steel sheet run through a stamping machine, then stretched to leave it full of diamond-shaped holes	None; must be painted when job is finished	Belt gaurds, protective guards for the back windows of trucks
Decorative Metal	Stamped with various punch patterns to create attractive designs; usually made from aluminum plate and available in many lively colors	Excellent	Ornamental and decorative applications
Tin Plate	Pure tin coated iron or steel sheets; coke, charcoal and dairy tin plates have a bright, silvery, mirror-like appearance.	Good	Food equipment where appearance and resistance to corrosion are essential.
Terne Plate	Copper-bearing steel strip, hot dip-coated with an alloy of lead and tin	Good	Metal roofing and weathersealing applications, such as valleys, copings, flashings and leader heads

SAMPLE TEST QUESTIONS

MATERIAL LIST

Note: Use the following to construct a test for your students.

Your instructor will have various samples of metals available to help you complete the following chart.

METAL IDENTIFICATION

IDENTIFICATION NUMBER	NAME OF MATERIAL	GAUGE SYSTEM USED	GAUGE THICKNESS	TYPICAL USES
1.				
2.				
3.				
4.				
5.				
6.				

Short Answer and Fill in the Blank:

1. Name the tool used to measure the thickness of metal sheet.

2. Which sheet of metal is thicker, an 18-gauge of a 24-gauge sheet?

3. Will coated metals measure less or more thickness than the actual thicknes of the metal?

4. Which metals are pure, with no metals added?

5. Which metals are coated of the surface?

6. What is the usual purpose of the coating on sheet metal?

7. Which metals are combinations of two or more base metals?

8. What is the purpose of an alloy of a metal?

9. Name the two basic elements of brass.

10. Name the three basic elements of stainless steel.

11. Galvanized iron is black iron coated with _____.

12. Tin is black iron coated with _____.

13 Terne plate is black iron coated with _____ and _____.

Multiple Choice:

1. Which of the following (is/are) characteristics of pure metals?
   a. Pure metals possess high strength and, therefore, are appropriate to most construction applications.
   b. Pure metals are chemical elements.
   c. Pure metals are hard and resist stress.
   d. All of the above.

2. Which of the following classify as pure metal(s)?
   a. Bronze
   b. Steel
   c. Zinc
   d. All of the above

3. Which of the following can be classified as alloys?
   a. Lead
   b. Steel
   c. Copper
   d. All of the above

4. Which of the following (is/are) types of ferrous metal(s)?
   a. Copper
   b. Alloys of steel
   c. Lead
   d. All of the above

5. Which of the following (is/are) classified as base metals?
   a. Sheet steel
   b. Cold-rolled steel
   c. Copper
   d. All of the above

6. Commonly, roofing and guttering materials are made from_____:

a. Alloy metals
b. Base metals
c. Coated metals
d. All of the above

7. Aluminum alloys are commonly used in _____:

a. Kitchen equipment
b. Hospital equipment
c. Ductwork
d. All of the above

8. Which of the following metals has the greatest fusibility?

a. Iron
b. High speed steel
c. Steel
d. Lead

9. Which of the following (is/are) classified as nonferrous metal(s)?

a. Copper
b. Gold
c. Uranium
d. All of the above

Matching:

Match the following terms with their definitions:

1.	Strength	A.	Resists penetration, wear or cutting action.
2.	Ductility	B.	A mixture formed by melting one or more metals together with another metal.
3.	Malleability	C.	The resistance of metal to being pulled apart.
4.	Hardness	D.	Process of forming metal when cold.
5.	Toughness	E.	Process by which a metal or metals may be softened by heating and either slow cooling or quenching.
6.	Brittleness	F.	Ability to resist tear and will stretch without breaking.
7.	Cold-work	G.	Metal that will shatter easily.
8.	Alloy	H.	Metal that can be rolled, forged, or hammered without cracking or breaking.
9.	Annealing.	I.	Ability of metal to be stretched without breaking.

ANSWERS TO SAMPLE TEST QUESTIONS

Short Answer and Fill in the Blank:

1. gauge
2. 18-gauge
3. more
4. base metals
5. coated metals
6. protect base metals form corrosion
7. alloy metals
8. provide new materials with desirable combinations of qualities taht are not fornd in a base metal
9. copper and zinc
10. iron, chromium and nickel
11. molten zinc
12. tin
13. lead and tin

Multiple Choice:

1. b
2. c
3. b
4. b
5. d
6. d
7. c
8. d
9. d

Matching:

1. C
2. I
3. H
4. A
5. F
6. G
7. D
8. B
9. E

LAYOUT

- BLUEPRINT READING
- MATHEMATICS
- LAYOUT AND MEASURING TOOLS
- PATTERN DEVELOPMENT

BLUEPRINT READING

COMPETENCY:

Interpret blueprint specifications.

OBJECTIVES:

1. Differentiate among types of dimensions.
2. Interpret exploded views and describe their uses.
3. Use an architectural scale to produce a drawing.
4. Use various scales in making and reading drawings.
5. Develop two and three view drawings.
6. Visualize one or more views from a given view.
7. Develop necessary views by means of projection.
8. Draw plan and elevation views.
9. Read an architectural drawing.
10. Identify layout allowances needed in seaming and joining ductwork.
11. Interpret commonly used trade symbols.
12. Interpret commonly used plumbing, electrical and welding symbols.
13. Interpret ductwork notations.

LEARNING ACTIVITIES:

1. COMPLETE the Sheet Metal Blueprint Reading for the Building Trades book by Claude J. Zinngrabe. Use the Blueprint Reading assignment sheet to keep track of your progress.

   Note: A copy of the Blueprint Reading Assignment Sheet is included in this guide and the Apprentice Guide.

2. REVIEW your answers with the instructor or another student.

EVALUATION/CHECK OUT:

Submit your Blueprint Reading book to your instructor for grading after each section.

LEARNING MATERIALS:

1. Copies of the Sheet Metal Blueprint Reading for the Building Trades textbook by Claude J. Zinngrabe. One copy per student.
2. A copy of the Sheet Metal Blueprint Reading for the

Building Trades instructor's guide.

ASSIGNMENT SHEET

BLUEPRINT READING

DIRECTIONS: Complete all of the following assignments unless your instructor suggests otherwise. Review the answers for each section with your instructor. Redo any units where you did not receive at least 90% accuracy. Ask your instructor to initial your successful completion of each unit in the section.

Instructor's Initials

SECTION I: IDENTIFICATION

_____ 1. COMPLETE the Pretest and Review on page 1.

SECTION II: MEASUREMENT REVIEW

_____ 2. READ Inch Rules and Fractional Divisions on page 5. COMPLETE assignment unit 2 on page 8.

_____ 3. READ Inch Rule and Decimal Divisions on page 10. COMPLETE assignment unit 3 on page 11.

_____ 4. READ Architectural Scale on pages 13 - 14. COMPLETE assignment unit 4 on pages 15 - 16.

SECTION III: ANGULAR MEASUREMENT REVIEW

_____ 5. READ Unit 5: The Protractor on page 17. COMPLETE assignment unit 5 on page 18.

_____ 6. READ Unit 6: The Dividers on page 19. COMPLETE assignment unit 6 on page 20.

_____ 7. COMPLETE the Unit 7 Competency Test on pages 21 - 22.

SECTION IV: DRAWING REVIEW

_____ 8. READ Unit 8: Drawing Review on pages 23 and 24. COMPLETE assignment unit 8 on pages 25 and 26.

_____ 9. READ Unit 9: Architectural Drawing on page 27. COMPLETE assignment unit 9 on pages 28 and 29.

_____ 10. READ Unit 10: Sheet Metal Drawing on pages 30 and 31. COMPLETE assignment unit 10 on pages 32 - 34.

SECTION V: SYMBOLS

_____ 11. READ Unit 11: Architectural Drafting Symbols on pages 35 - 37. COMPLETE assignment unit 11 on pages 38 - 39.

_____ 12. READ Unit 12: Plumbing Symbols on pages 40-42. COMPLETE assignment unit 12 on page 43.

_____ 13. READ Unit 13: Electrical Symbols on pages 44 - 46. COMPLETE assignment unit 13 on page 47.

_____ 14. READ Unit 14: Welding Symbols on page 47. COMPLETE assignment unit 14 on page 49.

_____ 15. READ Unit 15: Sheet Metal Symbols on pages 50 - 51. COMPLETE assignment unit 15 on page 52.

SECTION VI: SHEET METAL SHOP PROCEDURES

_____ 16. READ Unit 16: Shop Methods on pages 53 - 55. COMPLETE assignment unit 16 on page 56.

_____ 17. READ Unit 17: Material on pages 57 - 59. COMPLETE assignment unit 17 on page 60.

_____ 18. READ Unit 18: Estimating Methods on pages 61 - 63. COMPLETE assignment unit 18 on pages 64 and 65.

SECTION VII: GENERAL SHEET METAL WORK

_____ 19. READ Unit 19: Sheet Metal Fittings on pages 66 - 68. COMPLETE assignment unit 19 on page 69.

_____ 20. READ Unit 20: Roofing and Flashing on pages 70 - 75. COMPLETE assignment unit 20 on page 76.

_____ 21. READ Unit 21: Gutters, Downspouts and Ventilators on pages 77 - 79. COMPLETE assignment unit 21 on page 80.

_____ 22. READ Unit 22: Metal Decking on pages 81 - 83. COMPLETE assignment unit 22 on page 84.

_____ 23. READ Unit 23: Vee Belt Guard - Removable Cover - Junction Box pages 85 - 86. COMPLETE assignment unit 23 on pages 87 and 90.

SECTION VII: WARM-AIR HEATING PLANS

_____ 24. READ Unit 24: Warm-Air Heating Plans on pages 91 - 94. COMPLETE assignment unit 24 on page 95.

_____ 25. READ Unit 25: Heating Plans on pages 96 and

97. COMPLETE assignment unit 25 on page 98.

_____ 26. READ Unit 26: Project Home - Residential Home on page 99. COMPLETE assignment unit 26 on pages 100 - 102.

SECTION IX: VENTILATION PLANS

_____ 27. READ Unit 27: Ventilation Systems on pages 103 - 104. COMPLETE assignment unit 27 on pages 104 - 105.

_____ 28. READ Unit 28: Industrial Ventilation System on page 106. COMPLETE assignment unit 28 on pages 107 - 109.

_____ 29. READ Unit 29: Multizone Ventilation Systems on page 110. COMPLETE assignment unit 29 on pages 11 - 113.

SECTION X: AIR-CONDITIONING PLANS

_____ 30. READ Unit 30: Air-conditioning Systems on page 114. COMPLETE assignment unit 30 on page 115.

_____ 31. READ Unit 31: A Multiduct Air-Conditioning System on page 116. COMPLETE assignment unit 31 on page 117-119.

_____ 32. READ Unit 32: A Motel Air-Conditioning System on page 120. COMPLETE assignment unit 32 on pages 120 -122.

SECTION XI: BLOWPIPE PLANS

_____ 33. READ Unit 33: Exhaust Systems on pages 123 - 124. COMPLETE assignment unit 33 on pages 124 - 125.

_____ 34. READ Unit 34: Grinding Exhaust - Sash and Door G on page 126. COMPLETE assignment unit 34 on pages 127 - 130.

SECTION XII: SHEET METAL DRAFTING

_____ 35. READ Unit 35: Ductwork Layout on pages 131 - 132. COMPLETE assignment unit 36 on pages 133 - 138.

MATHEMATICS

COMPETENCY:

Use mathematics to perform sheet metal operations.

OBJECTIVES:

1. Add, subtract, multiply and divide common fractions.
2. Add, subtract, multiply and divide decimal fractions.
3. Use tables of trade data.
4. Demonstrate the proper use of the micrometer, steel rule, and protractor.
5. Use averages and percentages.
6. Summarize methods used to calculate wages, and weights and costs.
7. Use intersecting lines and parallel lines.
8. Solve equations by division, multiplication, subtraction and addition.
9. Solve equations by square root.
10. Recognize the area of a square, rectangle, triangle, trapezoid and circle.
11. Describe parallel sided solids.
12. Recognize the volumes of cylindrical, semi-circular sided and spherical ended solids
13. Recognize the volumes of cones and pyramids.
14. Use allowances for edges and seams.
15. Discuss the use of stretchouts of rectangular pipes, circular jobs, semi-circular jobs and boxes.
16. Use bar graphs, circle graphs and line graphs.

LEARNING ACTIVITIES:

1. COMPLETE the Mathematic Progress Contract according to your instructor's directions.
   Note: A copy of the contract is included in this guide and the apprentice guide.

EVALUATION/CHECK OUT:

Submit your Mathematics Progress Contract.

LEARNING MATERIALS:

Copies of the Mathematics for Sheet Metal Fabrication textbook. One copy per student.

ASSIGNMENT SHEET

MATHEMATIC PROGRESS CONTRACT

Apprentice Name _____

Instructor Name _____

School _____

Employer _____

Based on Mathematics for Sheet Metal Fabrication, A New York State Vocational and Practical Arts Association Publications, published by Delmar Publishers, Inc.

NOTE: READ Pages 253 through 271

BASIC PRINCIPLE SERIES			ASSIGNMENT SERIES			
Unit	Page		Unit	Page	Problems to be completed	Grade
#1	1-2	Introduction to Common Fractions	#1	3	Problems B and only 50% of each number in C	_____
#2	4-5	Fractional Divisions of Steel Rule	#2	6	Problems A: 1-3	_____
#3	7	Addition of Common Fractions	#3	7-8	Problems 1,3,5,etc.	_____
#4	9	Subtraction of Common Fractions	#4	9-11	Problems A: 1,4,7,10, 13,16,19,22, 25,26,27 B: 1,3,5,7, 9,11	_____
#5	12	Multiplication of Common Fractions	#5	13	Problems 1,3,5,etc.	_____
#6	14-15	Division of Common Fractions	#6	15	Problems 1,3,5,etc.	_____

#7	16	Summary of Common Fractions	#7	17	All Problems	_____
#8	18-19	Introduction to Decimal Fractions	#8	20	Problems B: 1 B: 2	_____
#9	21	The Steel Rule: Decimal Divisions	#9	22	Problems A	_____
#10	23	Addition and Subtraction of Decimal Fractions	#10	24-25	Problems A: 1,3,5,etc. B: 1,4,7,10 13,16 C: 1,3,5,7	_____
#11	26	Multiplication of Decimal Fractions	#11	26-27	Problems 1,3,5,etc.	_____
#12	28	Division of Decimal Fractions	#12	28-29	Problems 1,4,7,10 etc.	_____
#13	30	Rounding off Decimals	#13	30-31	Problems A: 1(a,c,e,g) B: 1,3,5,etc.	_____
#14	32	Changing Fractions and Decimals	#14	32-33	Problems A: 1,3,5,etc. B: 1,3,5,etc.	_____
#15	34	Other Uses of Fractions and Decimals	#15	35	Problems A: 1-4 B: 1-7 C: 1,3,5,7	_____
#16	36	The Decimal Equivalent Table	#16	36-37	Problems A: 1,4,7,10, 13,16,19 B: 1,4,7,10, 13,16,19 C: 1(a,c,e,g) C: 2(a,b,c,d) C: 3(a,c,e,g, i,k)	_____
#17	38	Dividing Lines	#17	38-39	Problems: Computation only	_____
#18	40-41	Use of Tables Trade Data	#18	42	Problems A:1-3 B: 1(a,c,e,g,i) B: 2(a,b,c)	_____

#19	43-44	The Micrometer	#19	44-45	Problems B	_____
#20	46	Degree of Accuracy	#20	47-48	Problems A: 1,3 B: 1,3,5 C: 2,4,6,8	_____
#21	49-50	The Units of Linear Measure	#21	50-51	Problems A:1,3 B: 1,3,5 C: 1 D: 1,3,5 E: 1,2	_____
#22	52	Addition and Subtraction of Units of Linear Measure	#22	52-53	All Problems	_____
#23	54	Multiplication of Units of Linear Measure	#23	54-55	All Problems	_____
#24	56	Division of Units of Linear Measure	#24	56-57	All Problems	_____

Hours_____ and Total Hours_____ Unit Test 1 _____

#25	58	Averages	#25	59	All Problems	_____
#26	60-61	Percentage	#26	61-63	Problems A: 1,4,7,10 13,16 B: 1,4,7,10 13,16,19 C: 1,4,7,19	_____
#27	64	Percentage-Additional Applications	#27	65	Problems A: 1,4,7,10, 13,16 B: 1,4,7,10 C: 1,4,7	_____
#28	66-67	Wages	#28	67-69	Problems A: 1,2,3 B: 2,3 C: 1 D: 1,3,5,7,9	_____
#29	70-71	Weights and Costs	#29	72-73	Problems A: 1,3 B: 2,4,6.etc.	_____

#30	74	Factory Cost and Selling Price	#30	75	Problems A: 1,3 B: 1,3 C: 1,3	_____
#31	76	The Circle	#31	77	Problems 1(a,c,e,g,i) 3(a,b,c,d,e,f)	_____
#32	78-79	The Units of Angular Measure	#32	79	Problems A: 1,3,5,7 B: 1,3,5 C: 2,4,6	_____
#33	80	The Protractor	#33	81	Problems 1 A-I	_____
#34	82-84	Triangles	#34	85	Problems 7: a,b,c,d 8: a,b,c,d	_____
#35	86-89	Intersecting Lines	#35	90	Problems C: 1-10	_____
#36	91-94	Parallel Lines	#36	95	Problems B: 2(a-f)	_____
#37	96-97	Squares, Rectangles, and Trapezoid	#37	98	Problems D: 1,2,3	_____
#38	99-100	Arcs of Circles and Tangents to Circles	#38	101	Problems B: 3-8	_____

Hours_____Total Hours_____Unit Test II_____

#39	102-103	Introduction to Symbols	#39	104-105	Problems A: 1,4,7, 10,13,16 B: 1,3,5,7,9 C: 1,3	_____
#40	106	Grouping Symbols	#40	107	Problems A: 1,3,5,etc. B: 1,3,5,7	_____

130

#41	108-109	Introduction to Equations	#41	110	Problems A: 1,3 B: 1,3 C: 1,3 D: 1,3 E: 1,3	_____
#42	111	How to Solve Equations by Division	#42	112	Problems: 1,3,5,etc.	_____
#43	113	How to Solve Equations by Multiplication	#43	114	Problems 1,3,5,etc.	_____
#44	115	How to Solve Equations by Subtraction	#44	116	Problems 1,3,5,etc.	_____
#45	117	How to Solve Equations by Addition	#45	117-118	Problems 1,3,5,etc.	_____
#46	119	Exponents	#46	120	Problems A: 1 B: 1,4,7 C: 1,3,5,7,9	_____
#47	121	How to Solve Equations by Square Root	#47	121-122	All Problems	_____
#48	123-124	Summary of Equations	#48	124-126	Problems A: 1,4,7,10,etc. B: 2,4,6 C: 1(a,b,c) 3,5,7,9(a-e)	_____

Hours_____Total Hours_____Unit Test III _____

#49	127	Introduction to Ratio	#49	128	Problems 1(a,c,e,g,i) 2(a,c,e) 3(a-d)	_____
#50	129	Ratio Applied to Scale Drawings	#50	130-131	Problems A: 1-10 B: 1,2,3	_____
#51	132	Direct Proportion	#51	133	Problems 1,3,5,etc.	_____

#52	134	Inverse Proportion	#52	135-136	Problems A: 1(a,c,e,g) 3(a,c) B: 1,3,5,7,9	_____
#53	137-138	Introduction to Formulas	Read Pages 137 and 138			
#54	139	Perimeter of a Square	#54	139-140	Problems 2(a,c,e,g,i) 3(a,c,e,g,i) 4,5	_____
#55	141-142	Perimeters of Rectangles and Triangles	#55	142-143	Problems A: 2(a,c,e,g,i,k) 4 B: 1(a-d) 2	
#56	144	Circumference of a Circle	#56	145	Problem 1(a,d,g,j) 2(a,c,e) 3(a,d,g) 4,5,6	_____
#57	146	Perimeter of a Semi-Circular Sided Figure	#57	147	Problems 1(a,c,e,g,i) 2(a,c,e,g) 3(a,c,e,g)	_____

Hours_____Total Hours_____Unit Test IV_____

#58	148-150	The Units of Area Measure	#58	150-151	All Problems	_____
#59	152	Area of a Square	#59	152-153	Problems 1(a,c,e,g,i,k) 2(a,c,e) 3(a,c) 6,7,8	_____
#60	154	Area of a Rectangle	#60	155	Problems 1(a,c,e) 2(a,c,e,g) 3(a,c) 5,7,9	_____
#61	156	Area of a Triangle	#61	157	Problems 1(a,c,e,g) 2(a,c) 3,4,5	_____

#62	158	Area of a Trapezoid	#62	159	Problems 1(a,c,e,g) 2(a,c) 5,6,7	_____
#63	160	Area of a Circle	#63	161	Problems 1(a,d,g,j,m,p,s) 2(a,c) 3,5,7	_____
#64	162	Addition and Subtraction of Area	#64	163-164	Problems A: 1,3 B: 1,3,5 C: 1 D: 1(a,d) 2(a,c) 3(b,d)	_____
#65	165-166	Area of Semi-Circular Sided Figures and Solids	#65	167-168	Problems 1(a,c,e,g) 2(a,c) 3(a,b) 5	_____

Hours_____Total Hours_____Unit Test V_____

#66	169-171	Description of Parallel Sided Solids	Read pages 169-171			
#67	173-175	The Units of Volume Measure	#67	176	Problems A: 1,3,5 B: 1-6 C: 1,3,5,7,9, 1,12	_____
#68	177-178	Volumes	#68	178-179	All Problems	_____
#69	180-181	Volumes of Cylindrical, Semi-Circular Sided and Spherical Ended Solids	#69	182	Problems A: 1,3,5,7 B: 1,3,4,7 C: 1(a,d) D: 2,3,4	_____
#70	183-188	Volumes of Cones and Pyramids	#70	188	Problems A: 1,3,5 B: 1,3,5 C: 1,3 D	_____

Hours_____Total Hours_____Unit Test VI_____

#71	189	Allowances for Edges	#71	190	All Problems	_____
#72	191-193	Allowances for Seams	#72	194	Problems A: 1,2 B: 1-4 C: 1,3 D: 1,2 E: 1,3 F: 1,2 G: 1,3,5 H: 1,3	_____
#73	195-196	Stretchouts of Square Pipes	#73	197	Problems A: 1,3,5 B: 1,3 C: 1-6 D: 1,3,5 E: 1	_____
#74	198	Stretchouts of Rectangular Pipes	#74	198-199	All Problems	_____
#75	200	Stretchouts of Circular Jobs	#75	201	Problems A: 1-4 B: 1-4 C: 1,2	_____
#76	202-203	Stretchouts of Semi Circular Sided Jobs	#76	203	Problems A: 1-3 B: 1-7	_____
#77	204	Stretchouts of Boxes	#77	205	All Problems	_____
#78	206	Number of Pieces From A Sheet	#78	207	All Problems	_____
#79	208	Length of Wire for Edges of Jobs	#79	209	All Problems	_____
#80	210	Length of Arcs of Circles	#80	211	All Problems	_____
#81	212-213	Description of Tapered Solids	Read page 214			
#82	215-218	Law of Right Triangles	#82	218-220	Problems A: 1,4,7,10,13, 16,19,22 B: 1,4,7,10 C: 1,4,7,10	_____

134

#83	221	Stretchouts of Cones	#83	222	Problems A: 1-4 B: 1,3,5 C: 1-4	_____
#84	223	Roof Pitches	#84	224	Problems A: 1,3,5,7 B: 1,3,6 C: 1-4	_____
#85	225	Bend Allowances	#85	226	Problems A: 1-6 B: 2,4,6,8	_____
#86	227	Surface Speeds of Rotating Cylinders	#86	228	Problems 1(a,c,e) 3,5,7,9	_____

Hours_____Total Hours_____Unit Test VII_____

#87	229-230	Introduction to Trigonometry	#87	231	Problems 1(a,c,d,e,g,i, k,m,o,p) 2(a,d,g,j, m,p,s)	_____
#88	232	Using the Tangent Formula	#88	233	Problems A: 1,3 B: 1,3,5,7 C: 1-4	_____
#89	234	Using the Sine Formula	#89	235	Problems A: 1,3,5 B: 1,3,5,7 C: 1,3,5	_____
#90	236	Using the Cosine Formula	#90	237	Problems A: 1,3,5 B: 1,3,5,7 C: 1-4	_____
#91	238	Selection of Formulas	#91	239-240	Problems 1,3,5,7,9	_____
#92	241-242	Bar Graphs	Read Page 243			
#93	244	Circle Graphs	Read Page 245			

#94	246-248	Line Graphs	#94	249	Problems 2(a,b,c) 3(a,b) 4(a,b)	_____
#95	250	On-The-Job-Applications	#95	250-252	All Problems	_____

Hours_____Total Hours_____Unit Test V111_____

NOTE: READ Pages 253 through 271

FINAL GRADE FOR MATH _____

SHEET METAL MATHEMATICS UNIT TEST 1

Based on Section 1, Fractions and Decimals and Section 2, Linear Measure

Directions: Place your answers in the blanks provided on the left side of the sheet. Show all scratch work on the back side of this sheet.

_____ 1. In describing the proper fraction 7/8, the number 7 is called the (a) denominator, (b) numerator.

_____ 2. 7/4 is what kind of a fraction?

_____ 3. The product is the answer obtained when you (a) add, (b) divide, (c) multiply, (d) subtract.

_____ 4. The mixed number 11/4 is a division problem. Which number is the divisor?

_____ 5. What is the difference between 18 and 12?

_____ 6. When dividing fractions, the rule is always _____ the divisor.

_____ 7. The answer in division is called the (a) sum, (b) product, (c) quotient, (d) difference.

_____ 8. When adding or subtracting fractions, it is first necessary to find the (a) lowest number, (b) lowest common numerator, (c) lowest common denominator, (d) linear.

_____ 9. 15/16 minus 3/8 equals?

_____ 10. 1/8 plus 3/16 plus 5/4 equals?

_____ 11. 7/16 times 1/3 equals?

_____ 12. 2-1/2 divided by 6 equals?

_____ 13. Find the decimal equivalent of 5/16.

_____ 14. Find the fractional equivalent of .28125 to the nearest 32nd of an inch.

_____ 15. Compute the rivet spacing on the drawing below.

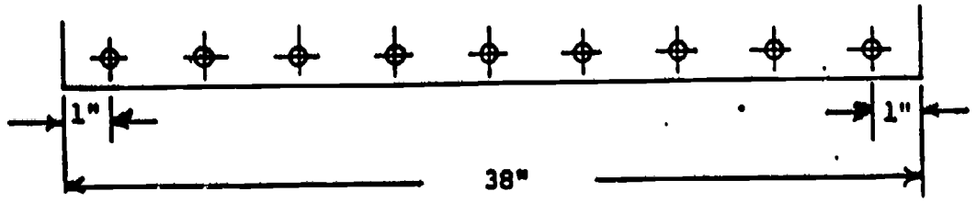

_____ 16. What are the permissible dimensions of a job which has a basic dimension of 5-3/8 inch if the tolerance is + or - 1/64 of an inch.

_____ 17. Change 405 inches to feet and inches.

_____ 18. Change 20' 9-3/4" to inches.

_____ 19. Subtract 3' 8-5/8" from 7' 10-1/2".

_____ 20. Divide 12' 8-1/2" by 8.

SHEET METAL MATHEMATICS UNIT TEST 2

Based on Section 3, Averages, Percentages, Costs, and Wages and Section 4, Geometry

Directions: Place your answers on the blanks provided on the left side of the sheet. Show all work on the back of this sheet.

_____ 1. Find the average length of the following six rods: [illegible]' 10", 10' 6", 2' 4", 4' 5", 1' 2", 5' 3".

_____ 2. Change .3% to decimal form.

_____ 3. Change .258 to a percent.

_____ 4. If the list price per box of 1 lb. tinners rivets is $1.40 and the trade discount is 40%, what is the net price per box?

_____ 5. The distance around a circle is called the _____.

_____ 6. An angle is formed by two straight lines intersecting at a point called the _____.

_____ 7. How many degrees are there in 5/12 of a circle?

_____ 8. The radius is equal to _____ the diameter.

_____ 9. The diameter is equal to _____ the radius.

_____ 10. Angles are measured with a device called a _____.

_____ 11. What is the name of a triangle having two equal sides?

12. What are the angles of the following drawings (1, 2, 3, 4, 5, 6)?

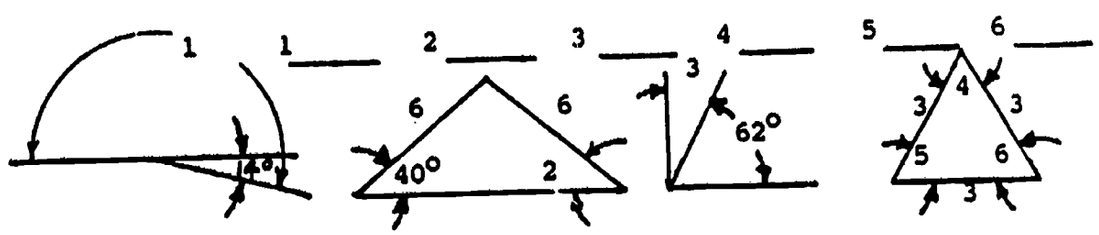

_____ 13. How many degrees does a straight line contain?

_____ 14. How many degrees do complimentary angles contain?

_____ 15. _____ are plane figures whose opposite sides are parallel.

_____ 16. A _____ is a four-sided plane figure having the opposite sides equal and each angle equal to 90 degrees.

_____ 17. A trapezoid is a four-sided plane figure with only two sides _____.

_____ 18. If straight lines are at 90^0 to each other, they are said to be _____.

_____ 19. The sum of the angles of any triangle is always equal to _____

_____ 20. Angles of 90^0 are called _____.

- 6/6/89

SHEET METAL MATHEMATICS UNIT TEST 3

Based on Section 5, Equations

_____ 1. What is the product of 5 and a?

_____ 2. The length of a piece of band iron is s. What is the length of another piece of iron which is three times as long in terms of s?

_____ 3. Find the numerical value of the following expression:
$\frac{(2a + b)\ 5}{2}$ a = 4 b = 6

_____ 4. What length increased by 10 inches will give 18.5 inches?

_____ 5. A certain number multiplied by 4-1/2 is 90. What is the number?

_____ 6. Solve for x in 9x = 76-1/2.

_____ 7. If 20% of the payroll of an industrial firm is equal to $30,000, what is the total payroll in dollars?

_____ 8. Solve for N in N/7-1/2 = 3.

_____ 9. The pitch of a roof is 1/4, the rise 9 feet. What is the span?

_____ 10. Solve for w in 38-1/2 = w + 6.

_____ 11. A piece of band iron is 19-3/4 inches long. If it is cut so that one part is 5-7/8 inches long, how long will the other part be?

_____ 12. Solve for L in L - 4 = 6.58.

_____ 13. A box is 27-1/2 inches wide. How long should it be if its width is 10-3/4 inches less than its length?

14. Find the value of each of the following expressions:
a. 6^3 _____ b. 9^4 _____ c. $(1/5)^4$ _____ d. $.05^3$ _____

15. Find the value of each of the following expressions:
a. r^3, r=7 _____ b. $6w^2$, w=5 _____ c. $\frac{d^2}{4}$, d=6 _____

16. Add, subtract, multiply, and divide the following problems:
a. $s^2 + s^2$ _____ b. $3r^2 - r^2$ _____ c. $d^4 \times d$ _____ d. $\frac{10a}{2}$ _____

_____ 17. Solve for r in $r^2 = 75$.

_____ 18. Solve for a in $a^2 = 22.5$.

_____ 19. Find the angle of each piece of a five-piece 90° elbow. (Hint: The two end gores are the same angle--the three center gores are the same angle.)

_____ 20. Find the value of the unknown in this problem: $8s^2 = 1600$.

To:sr
6/6/89

SHEET METAL MATHEMATICS UNIT TEST 4

Based on Section 6, Ratio and Proportion and Section 7, Perimeters

_____ 1. What is the ratio of 10" to 12'? The numerator of the answer is to be the numeral 1.

_____ 2. What is the ratio of 4" to 2 yds.? Express the numerator as 1.

_____ 3. The scale, 3" to the foot, is the same as the ratio of 1 to _____.

_____ 4. The ratio of scrap to finished fittings on a certain job is 1 to 3. The finished fittings weight 800 lbs. How much scrap was there?

_____ 5. The length of a drawing line is 8" and the job length is 32". What is the scale in inches to the foot?

_____ 6. If 50' of band iron weighs 11.50 lbs., what will 125' weight?

_____ 7. A bronze alloy contains 9 parts of copper by weight to 2 parts of tin. Find the amount of each metal in 220 lbs. of this bronze.
Hint: x = lbs. of tin $\frac{x}{220} = \frac{2}{2+9}$ & $\frac{y}{220} = \frac{9}{2+9}$
y = lbs. of copper

_____ 8. A pile of 200 sheets of metal is 16 inches high. How many sheets would there be in a 60-inch pile?

_____ 9. A pully must be driven at the rate of 850 RPM. If the motor RPM is 2125 and the driven pully is 17.5", what must be the size of the pully on the motor?

_____ 10. What is the formula for the perimeter of a rectangle? Hint: Let L = the length of the longer side and w = the length of the shorter side.

_____ 11. What is the formula for the perimeter of a square? Hint: Let S = the length of one side.

_____ 12. Find the perimeter of a rectangle whose length is 8.36" and whose width is 6.94".

_____ 13. Find the perimeter of a triangle with sides of the following lengths.
a. 5' 3" b. 9.500' c. 7' 9"

_____ 14. Determine the sum of the following linear dimensions:
8' - 7-1/2" + 6-5/16" + 10' - 1/4".

_____ 15. What is the formula for the circumference of a circle?

_____ 16. Find the circumference of the following circle to the nearest 16th of an inch. Diameter = 1' 3".

_____ 17. Find the length of the stretchout for a piece of pipe (no allowance for seam) to the closest 64th of an inch. Radius = 4-5/32".

OVER 140

_____ 18. Find the circumference of the following circle to the nearest 32nd of an inch. Diameter = 10-3/8".

_____ 19. Find the perimeter of the following semicircular-sided figure to the nearest 16th of an inch. R = 6" W = 7-1/4".

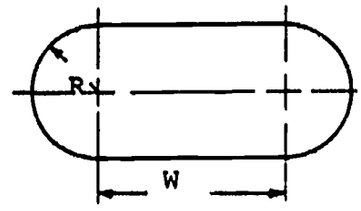

_____ 20. Find the length of the stretchout (no allowance for seam) for the following semicircular-sided pipe to the nearest 32nd of an inch. R - 2-1/2" W = 6".

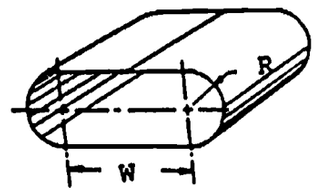

SHEET METAL MATHEMATICS UNIT TEST 5

Based on Section 8, Area Measure

_____ 1. What is the formula for the area of a square?

_____ 2. Compute the cross-sectional area for this square pipe. S - 4' 4"

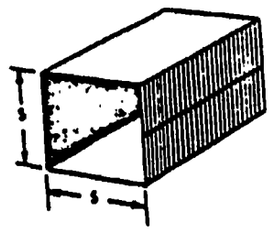

_____ 3. What is the area of a square that has a perimeter of 49"?

_____ 4. What is the formula for the area of a rectangle?

_____ 5. Find the area of a rectangular piece of sheet metal 92" long and 36" wide.

_____ 6. Compute the cross-sectional area in sq. in. of the rectangular pipe below. b = 5' 3" h = 3' 6"

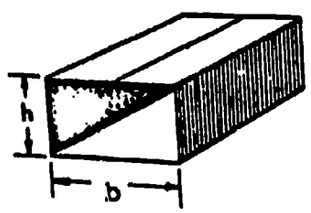

_____ 7. What is the formula for the area of a triangle?

_____ 8. What is the area of a triangle that has a base 12' long and an altitude of 32"? Answer in square feet.

_____ 9. Find the area of a triangle in square inches whose base is 6' 6" and whose altitude is 3' 2".

_____ 10. What is the formula for the area of a circle?

_____ 11. Find the area of a circle whose diameter is 13 inches. Answer to the nearest 64th of an inch.

_____ 12. What is the area of a circle that has a circumference of 94.20"? Answer in square inches.

142

OVER

_____ 13. Compute the area of the trapezoid below using the formula:
$A = \frac{(B + b)\,a}{2}$ Use dimensions given.

Symbols: A = area B = length of large base
a = altitude b = length of small base

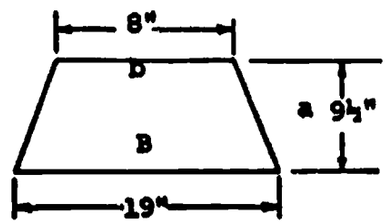

_____ 14. Find the total area of the figure below in sq. ft.: Use dimensions given.
The formula is $A = lw + \frac{(B + b)a}{2}$

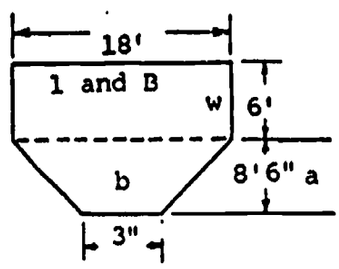

_____ 15. Find the net area of the flange below in sq. in. Use dimensions as shown.

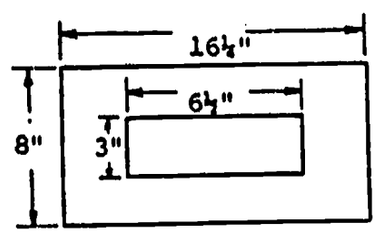

_____ 16. Compute the amount of waste in sq. in. and the percent of waste for the triangle below. Use dimensions as shown.

_____

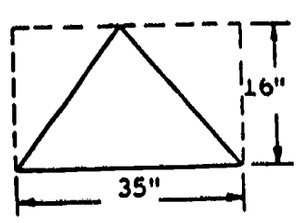

_____ 17. Compute the amount of waste in sq. in. and the percent of waste in the figure below. Use dimensions as shown.

_____

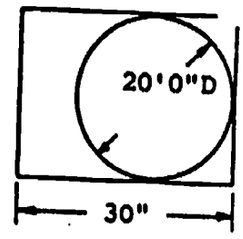

_____ 18. What is the formula for the area of a semicircular-sided figure?

_____ 19. Find the cross-sectional area in sq. in. of the pipe below if r = 2' 3" and w = 2' 5". Carry out answer two places past the decimal point.

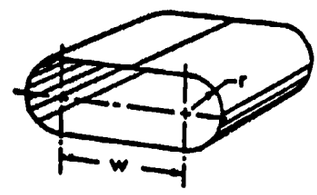

_____ 20. Compute the amount of waste in sq. in. and the percentage of waste in the problem below. Carry out answers two places past the decimal point.

_____

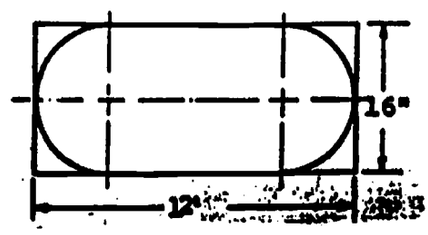

SHEET METAL MATHEMATICS UNIT TEST 6

Based on Section 9, Volume Measure

Directions: Place your answers in the blanks provided on the left side of the sheet. Show all scratch work on a separate sheet of paper.

_____ 1. What is the formula for the volume of a rectangular solid?

_____ 2. How many gallons of water would a rectangular tank hold that measured 100" by 50" by 23.1"?

_____ 3. Convert 28.96 cu. yd. to cu. ft. Hint: There are 27 cu. ft. to one cu. yd.

_____ 4. Convert 20,500 cu. in. to cu. ft. Hint: There are 1,728 cu. in. to one cu. ft. Carry out two places past the decimal point.

_____ 5. What is the formula for the volume of a cube?

CUBE

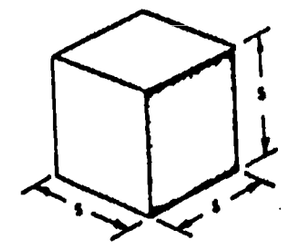

_____ 6. The side of the cube above is 15 in. Find its volume in cu. in.

_____ 7. The volume of a square prism is equal to the area of the base times the height. Using the dimensions on the drawing below compute the volume in cu. ft. How many gallons would it contain? Hint: 1 cu. ft. equals 7.48 gal.

SQUARE PRISM

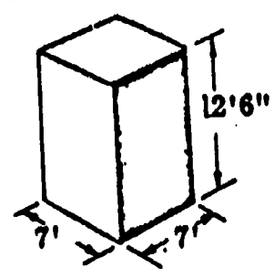

_____ 8. What is the volume of a rectangular solid in cu. in. If the length is 30 in., the width 23 in., and the height 1' 8".

_____ 9. The volume of a cylinder is equal to the area of the end times the length. Find the volume of a cylinder in cu. ft. whose length is 24" and the diameter is 18". Carry out two places past the decimal point. Hint: 1,728 cu. in. equals 1 cu. ft.

_____ 10. What would be the capacity in gallons of the cylindrical container below whose diameter is 24' and whose length is 4' 6". Hint: 7.48 gal. = 1 cu. ft.

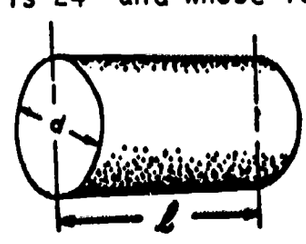

_____ 11. Find the volume in cu. in. of the semicircular-sided container below using dimensions given. Hint: The formula is $V = \pi r^2 + 2\ rw)\ h$.

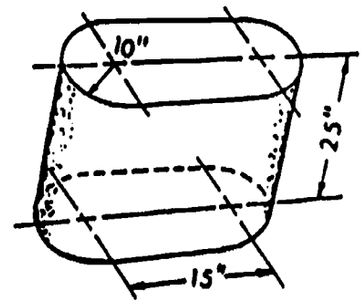

_____ 12. The formula for the volume of a spherical-ended tank is: $V = \pi r^2(4/3\ r + h)$. Compute the volume in cu. ft. for the tank below if $r = 14'$ and $h = 16'$.

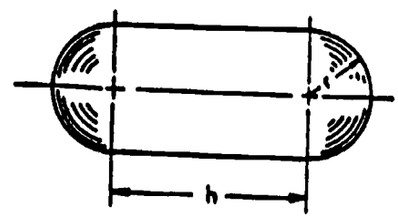

_____ 13. Compute the volume in cu. ft. of the right circular cone below. The formula is: $V = \frac{(\pi r^2)}{3} h$. Use dimensions given.

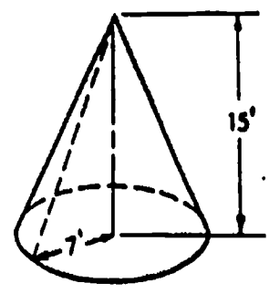

_____ 14. Compute the volume in cu. in. for the rectangular pyramid below if the length is 16 in., the width 12 in., and the height 8 in. Hint: The formula is: $V = \frac{(l\ w)\ h}{3}$

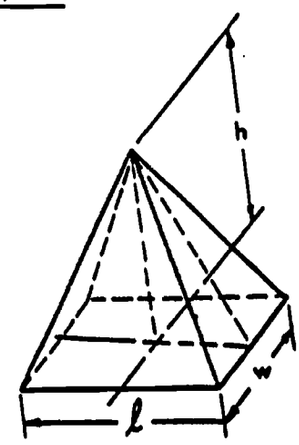

_____ 15. Find the volume in cu. ft. of the right square pyramid below if S = 5' 6" and h = 15' 6". Hint: The formula is: $V = \frac{S^2 h}{3}$. Carry out two places past the decimal point.

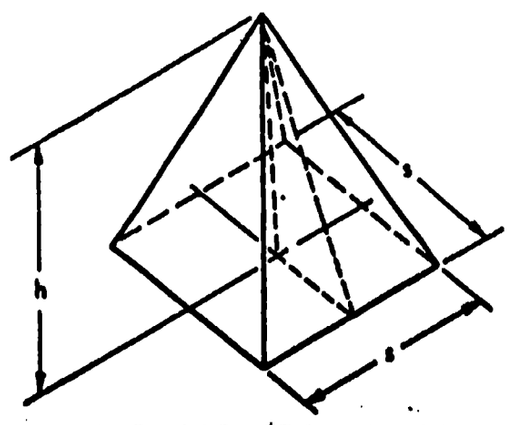

RIGHT SQUARE PYRAMID

SHEET METAL MATHEMATICS UNIT TEST 7

Based on Section 10, Formulas: Special Problems

Directions: Place your answers in the blanks provided on the left side of the sheet. Show all scratch work on a separate sheet of paper.

_____ 1. The allowance for a wired edge is _____ times the diameter of the wire for 24-gauge and less.

_____ 2. The space from the edge of the metal to the center of the rivet line should be at least _____ the diameter of the rivet.

_____ 3. What is the allowance on each end of a pattern for a 1/4" grooved seam?

_____ 4. Compute to the nearest 64th of an inch the stretchout of the 12" diameter pipe below. Note: No allowance is to be made for the seam.

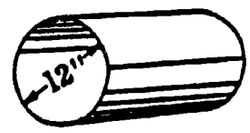

_____ 5. What is the perimeter of a semicircular-sided tank that is 10' long and 5' wide? The dimensions given are overall. Answer in feet and inches to the nearest sixteenth of an inch.

Note: No allowance is to be made for the seam.

_____ 6. Compute the length and width of the stretchout for the box below. If h = 3-13/16 in., l = 23-3/4 in., and w = 7-5/8 in.

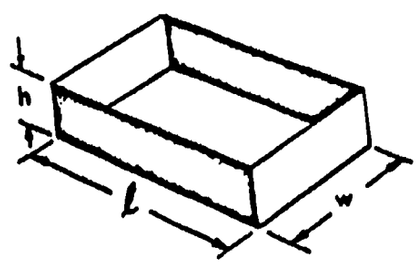

_____ 7. How many pieces of metal 12" x 9" can be obtained from a sheet 36" x 120".

_____ 8. How many pieces of metal 10" x 8" can be obtained from a sheet 36" x 120".

_____ 9. What is the formula for finding the hypotenuse of a right triangle.

Symbols: c = length of hypotenuse
a = length of altitude
b = length of base

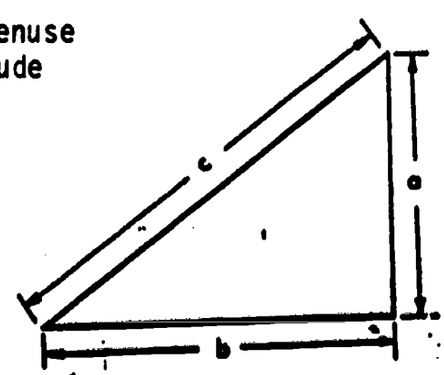

SHEET METAL MATHEMATICS UNIT TEST 8

Based on Section 11, Introduction to Trigonometry

Directions: Place your answers in the blanks provided. Show all scratch work on a separate sheet of paper. Use the Table of Natural Trigonometric functions to solve the following problems. (Page 230 - Mathematics for Sheet Metal Fabrication.)

1. Find the number (ratio) corresponding to each of the following angles:

Angle	Sine	Cosine	Tangent
15°	_____	_____	_____
66°	_____	_____	_____
47°	_____	_____	_____

2. Using the tangent formula (Tan A = $\frac{\text{opp.}}{\text{adjac.}}$ or $\frac{a}{b}$) compute the value of angle A in each of the following right triangles.

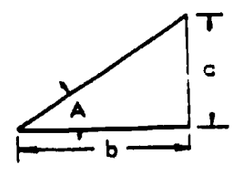

a = 3" b = 5" _____ a = 6" b = 8.5" _____

3. Using the tangent formula compute the length of side a of each triangle to the nearest 64th of an inch.

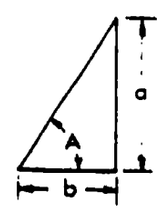

∠A = 50° b = 4" _____ ∠A = 18° b = 23.5" _____

4. Using the sine formula (Sin A = $\frac{\text{opp.}}{\text{hypot.}}$ or $\frac{a}{c}$) compute the value of angle A in each of the following right triangles.

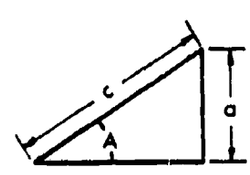

a = 4.0" c = 6.5" _____ a = 2'6" c = 4'7" _____

OVER

5. Using the sine formula compute the length of side a of each triangle to the nearest 64th of an inch. (See triangle on previous page for meaning of letters.)

   A = 47° c = 8" _____ A = 31° c = 3'4" _____

6. Using the cosine formula (Cos A = $\frac{\text{adjac.}}{\text{hypot.}}$ or $\frac{b}{c}$) compute the value of angle A in the following right triangles.

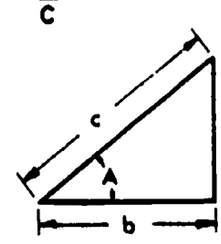

   c = 6 1/2" b = 4" _____ c = 12'3" b = 8'6" _____

7. Using the cosine formula, compute the length of side b of each triangle to the nearest 32nd of an inch. (See triangle above for meaning of letters.)

   A = 26° c = 12 5/8" _____ A = 75° c = 16'3" _____

8. Select the proper trigonometric formula for the problem below.

   Compute the hole spacing a (64ths) of the plate shown at the right. The diameter of the large circle is 10 in. (Find ∠A and then a/2.)

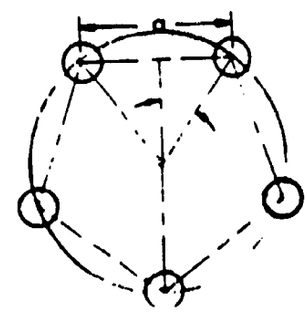

   Answer _____

FINAL EXAMINATION

In blanks 1-6, place the letter of the hand tool in the right-hand column in the blank corresponding to its intended purpose or use in the left-hand column.

____ 1. Find the circumference of a circle.	a. Circumference rule
____ 2. Square a piece of metal.	b. Combination square
____ 3. Used to pound rivets in the sheet metal shop.	c. File
____ 4. Used to make small indentations in the metal to locate points for dividers or bend lines.	d. Prick punch
____ 5. Form the finished head of tinners' rivets.	e. Rivet set
____ 6. Remove a burr from a piece of metal.	f. Riveting hammer

In blanks 7-12, identify the bends by placing the letter of the bend in the right-hand column in the blank corresponding to the diagram of the bend.

____ 7. 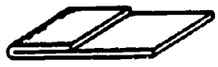

____ 8. 

____ 9. 

____ 10. 

____ 11. 

____ 12. 

a. Bend less than 90°
b. Bend more than 90°
c. Double hem
d. 90° bend
e. Radius bend
f. Single hem

In blanks 13-22, identify the edges or seams by placing the letter of the edge or seam in the right-hand column in the blank corresponding to the diagram of the edge or seam.

____ 13. 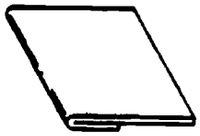

____ 14. 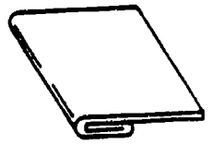

____ 15. 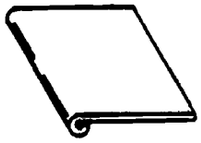

____ 16. 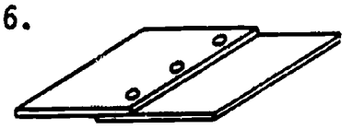

____ 17. 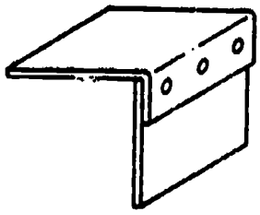

____ 18. 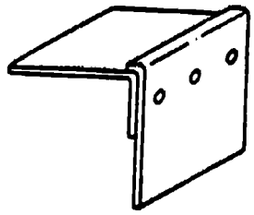

____ 19. 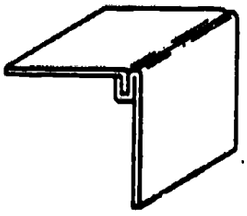

____ 20. 

____ 21. 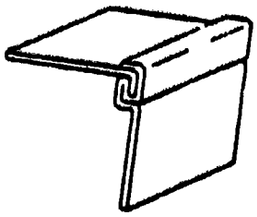

____ 22. 

a. Double hem
b. Grooved lock seam
c. Pittsburgh lock seam (corner)
d. Pocket solder lock seam
e. Riveted corner seam (lap on the inside)
f. Riveted corner seam (lap on the outside)
g. Riveted lap seam
h. Single hem
i. Standing seam
j. Wired edge

In blanks 23-27, identify the rivets by placing the letter of the rivet in the right-hand column in the blank corresponding to the rivet in the diagram.

____ 23.
____ 24.
____ 25.
____ 26.
____ 27.

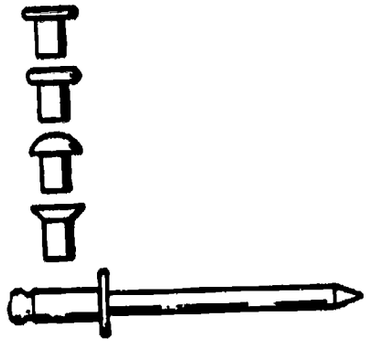

a. Countersunk
b. Flathead
c. Pop or blind
d. Roundhead
e. Tinners'

Questions 28-80 or True-False (T F). Circle the correct answer.

T F 28. The sheet metal tools and machines of today can produce faster and more accurately than those in the past.

T F 29. The two basic categories of sheet metalworkers are the precision sheet metalworkers and close-tolerance sheet metalworkers.

T F 30. Gutters and downspouts usually are made and installed by precision sheet metalworkers.

T F 31. Draftsmen are needed in both precision sheet metalwork and building trades sheet metalworkers.

T F 32. Safe working habits aid in preventing accidents in the shop.

T F 33. It is more important to choose the quickest, rather than the safest, way of doing a job.

T F 34. A 6-inch steel rule usually is used to measure metal thicknesses.

T F 35. Galvanized steel is an example of a coated metal.

T F 36. In sheet metal layout work, use a wooden rule.

T F 37. The sheet metal layout tool comparable to a pencil used in drafting is a scratch awl.

T F 38. In sheet metal layout work, you should work from the center of the pattern for each measurement.

T F 39. Forming information should be marked on the inside surface of the pattern.

T F 40. Nicked or worn edges on the steel rule are not a serious problem in sheet metalwork.

T F 41. It is a good practice to move the scratch awl back and forth along the edge of the steel rule at least two or three times for a heavy line.

T F 42. It is important that prick-punch marks be made as dark as possible.

T F 43. Layout marks on copper sheet should be made with a pencil.

T F 44. A combination snips can be used for both straight and curved cutting.

T F 45. The combination snips is the snips used most often in sheet metalwork.

T F 46. A squaring shear can be used to cut curves.

T F 47. The smaller end of the piece of sheet metal should be placed on the bed of the squaring shear.

T F 48. Any smaller pieces of sheet metal that are cut off should be permitted to drop to the floor without attempting to stop or catch them.

T F 49. Punching is a gradual metal-removing process in which only small pieces of metal are removed with each operation of the punch.

T F 50. The piece of metal punched out in the punching operation is called a slug.

T F 51. A square or rectangular hole is made in drilling.

T F 52. In drilling a hole, the metal removed or drilled out forms many tiny pieces called "chips."

T F 53. High twist drill speeds are used for the small-diameter holes.

T F 54. In drilling, place a block of wood between the metal and the worktable of the drill press.

T F 55. When you have finished using a twist drill, remove the chips before storing it.

T F 56. The two edges used most commonly on sheet metal products are the single hem and double hem.

T F 57. A single hem provides a rounded edge.

T F 58. A formed part is removed more easily from the roll forming machine than from the slip-roll forming machine.

T F 59. The piece of metal to be formed is inserted from the rear of the slip-roll forming machine.

T F 60. An advantage of pop riveting is that a backup stake is not needed for the head of the rivet.

T F 61. Soldering is used to join metals permanently.

T F 62. Soldering can be used to round out corners.

T F 63. The solder must have a lower melting point than the metals being joined.

T F 64. A high percentage of tin indicates a poor quality solder.

T F 65. A "tinned" soldering iron means that the tip of the iron is coated with solder.

T F 66. An advantage of an electric soldering iron is that the heat remains constant.

T F 67. "Nonproductive time" is the time actually spent in producing an item.

T F 68. Careful planning is more important in producing a single item than in mass producing that item.

T F 69. Only one inspection operation is necessary in a mass-production sequence of operations.

T F 70. In mass-production methods, both hand and machine cutting operations can be used.

T F 71. The fittings and pipe usually are joined together at the time they are being installed.

T F 72. Most sheet metal shops use working drawings rather than isometric drawings.

T F 73. When a drawing indicates that the size of an opening is 20 x 16, the number 20 refers to the side rather than to the depth of the opening.

T F 74. All the layout and forming lines should be placed on the inside surface of the pattern.

T F 75. Begin the layout work at the lower left-hand edge of the piece of metal.

T F 76. The layout method used most commonly for most of the common fittings is parallel-line development.

T F 77. The additional length of metal needed to allow for forming a sheet metal part is called the bend allowance.

T F 78. The dividers can be used to locate holes and to scribe arcs and circles on metal.

T F 79. The chief advantage of using a plastic material, rather than sheet metal, for a fume hood is that it resists corrosion.

T F 80. Sharp scriber marks are essential in layout work on the thermoplastics.

Questions 81 through 120 are Multiple Choice. Place the letter of the best answer in the blank.

_____ 81. The sheet metalworkers who make and install ductwork are:
a. building trades sheet metalworkers
b. precision sheet metalworkers
c. both a and b
d. neither a nor b

_____ 82. The sheet metalworkers who make the ductwork, transport it to the building or job site, and then install it are classified as:
a. shopmen
b. fieldmen
c. general sheet metalworkers
d. none of these

_____ 83. The precision sheet metalworkers who fasten the completed parts or pieces together are classified as:
a. modelmakers
b. inspectors
c. assemblers
d. fabricators

____ 84. The types of workers needed in both precision sheet metalwork and building trades sheet metalwork are:
a. engineers and estimators
b. foremen and superintendents
c. both a and b
d. neither a nor b

____ 85. The gauge of a sheet of metal is determined by its:
a. weight
b. thickness
c. length
d. width

____ 86. Some metals differ from other metals in that they:
a. bend easier
b. are stronger and more expensive
c. can be welded or soldered easier
d. all of these

____ 87. The metal used most often for restaurant and cafeteria equipment, household utensils, and dairy equipment is:
a. copper
b. sheet steel
c. stainless steel
d. none of these

____ 88. Nuts and bolts, rather than rivets, are advantageous when the:
a. part or product is to be assembled permanently
b. part or product might have to be taken apart
c. neither a nor b

____ 89. To mark lines on a piece of sheet metal, use a:
a. center punch
b. prick punch
c. scratch awl
d. pencil

____ 90. A rough edge on a piece of metal after cutting, punching, or drilling is called a:
a. burr
b. thistle
c. seam
d. file

____ 91. Two general classifications of snips are:
a. straight cutting and 90° angle cutting
b. circular cutting and edge cutting
c. straight cutting and circular cutting
d. none of these

____ 92. When cutting a piece of sheet metal with a hand snips:
a. both the metal and the snips should rest on the workbench
b. only the snips should rest on the workbench; hold the metal above the workbench
c. only the metal should rest on the workbench
d. none of these

_____ 93. If a burr or jagged edge results, you should:
a. cut it off with the snips
b. file it off
c. leave it alone
d. hem the edge

_____ 94. Before cutting an inside hole or opening, you should start the cut with a:
a. hammer and chisel
b. drill
c. hand punch
d. any of these

_____ 95. The portion of the metal cut out of a pattern before it is formed is a/an:
a. edge
b. notch
c. hole
d. slot

_____ 96. When a pattern is not notched or is notched incorrectly:
a. overlapping can occur, causing bulges
b. might be unable to form the pattern
c. both a and b
d. neither a nor b

_____ 97. In making box- or pan-shaped projects, use the:
a. slant notch
b. square notch
c. straight notch
d. vee notch

_____ 98. Holes might be necessary in sheet metal jobs for:
a. rivets and bolts
b. sheet metal screws
c. design of the project
d. all of these

_____ 99. The size of a punch indicates the:
a. depth of the hole it punches
b. diameter of the hole it punches
c. maximum metal thickness it punches
d. all of these

_____ 100. When operating a bending brake, you should stand on the:
a. right-hand side
b. left-hand side
c. either a or b
d. behind the brake

_____ 101. The box and pan brake is used primarily to form:
a. round pans
b. square and rectangular parts
c. edges on formed boxes
d. all of these

____ 102. In forming a box, you should first form the:
a. hems
b. shape of the box
c. either a or b
d. neither a nor b

____ 103. Semihand riveting also is called:
a. hand riveting
b. machine riveting
c. blind or pop riveting
d. none of these

____ 104. To prepare the metal surfaces before soldering, use a:
a. dipping solution
b. flux
c. sal ammoniac block
d. solder

____ 105. Sheet metal projects should be painted:
a. as each part is completed or formed
b. before assembly
c. after assembly
d. either before or after assembly, depending on the design of the project

____ 106. The buffing operation:
a. removes small scratches
b. cleans the surface of the metal
c. provides a shiny appearance
d. all of these

____ 107. The buffing compound is applied to the:
a. metal surface
b. buffing wheel
c. both a and b
d. neither a nor b

____ 108. The metal surface should be placed against the:
a. lower portion of the buffing wheel
b. upper portion of the buffing wheel
c. middle portion of the buffing wheel
d. any portion of the buffing wheel

____ 109. Painted metal surfaces require:
a. three or more coats of paint
b. not less than two coats of paint
c. only one coat of paint
d. either one or two coats of paint, depending on the thickness of the paint

____ 110. Circulation of air in a building is provided by a/an:
a. air conditioning system
b. heating system
c. ventilating system
d. none of these

_____ 111. In sheet metalwork, a fitting means:
a. a change in the direction of air flow
b. the sizes of the ends are different
c. both a and b
d. neither a nor b

_____ 112. A shop sketch includes:
a. all the dimensions and other information needed to make the fitting or pipe
b. location of all ductwork and equipment
c. overall shape of a fitting
d. dimensions of the workshop

_____ 113. The abbreviation FOT means the flat pattern is on the:
a. top
b. bottom
c. side
d. none of these

_____ 114. A bend allowance is determined by the:
a. inside radius of the bend
b. thickness of the metal
c. overall size of the part
d. both a and b

_____ 115. A steel rule, rather than a wooden rule, is used in sheet metalwork because the:
a. edges do not wear or become knicked quickly to cause errors in measuring
b. steel rule is stronger
c. steel rule is more expensive
d. none of these

_____ 116. The thickness of a wire can be measured accurately with a:
a. vernier caliper
b. micrometer
c. steel rule
d. all of these

_____ 117. The view(s) showing both the length and height of an object is/are:
a. front
b. side
c. top
d. all of these

_____ 118. The type of line having precedence over a hidden line is a/an:
a. center line
b. visible line
c. extension line
d. none of these

_____ 119. The advantages of thermoplastics over sheet metal include:
a. more thermal expansion, more deformation under load, and less ductility
b. lighter in weight, less time in fabrication, and longer service life of the product
c. more moisture resistance, more creep, and less working strength
d. all of these

_____ 120. Plastics are used in HVAC work because they are:
a. lightweight
b. corrosion-resistant
c. easy to fabricate
d. all of these

MEASURING AND LAYOUT TOOLS

COMPETENCIES:

1. Use measuring equipment.
2. Use layout tools.

OBJECTIVES:

1. Match the terms associated with measuring and layout to the correct definition.
2. Identify the semi-precision tools used in the shop.
3. Explain how to read a rule.
4. Identify the precision measuring tools used in the shop.
5. Name the parts of an outside micrometer.
6. Name the parts of the vernier caliper.
7. List the uses of the dial indicator.
8. Identify the equipment used in layout.
9. List uses of a circumference rule.
10. Summarize various uses of a steel square.
11. Name the general protractors and demonstrate their uses.
12. Discuss the uses of a marking gauge.
13. Explain when trammels are used rather than dividers.

LEARNING ACTIVITIES:

1. READ and STUDY the Types of Measuring and Their Uses Information sheet.
   Note: A copy of the sheet is included in this guide and the apprentice guide.

2. STUDY the six handouts on the micrometer and vernier calipers:
   - Parts of a Micrometer
   - Sleeve Graduations on a Micrometer
   - Thimble Graduations on a Micrometer
   - Parts of a Vernier Calipers
   - Vernier Scale Graduations
   - Beam Graduations on a Vernier Caliper

3. WATCH your instructor demonstrate the proper use of various measuring tools and practice reading the tools correctly.

4. READ pages 9-16 in the <u>Short Course in Metal Shop Theory</u> by Richard Budzik.

5. COMPLETE the questions at the end of the chapter in the text on page 16.

6. OBSERVE a demonstration given by your instructor on layout tools. PRACTICE using various tools in pairs with your classmates.

7. PARTICIPATE in class lecture and discussion on measuring tools and layout.

8. CREATE a large working model of sleeve and thimble of the micrometer. Use different size cardboard mailing tubes.

9. DEVELOP a working model of the Vernier scale and a section of the Vernier caliper. Make the model at least six times the actual size.

10. COMPLETE the assignment sheet Identify Measuring and Layout Tools.
    Note: A copy of the assignment sheet is included in this guide and the apprentice guide.

11. COMPLETE the Drawing Lines and Objects assignment sheet.
    Note: A copy of the assignment sheet is included in this guide and the apprentice guide.

12. COMPLETE the Reducing Measurements assignment sheet.
    Note: A copy of the assignment sheet is included in this guide and the apprentice guide.

13. COMPLETE the Measuring Using a Micrometer Caliper assignment sheet.
    Note: A copy of the assignment sheet is included in this guide and the apprentice guide. Another assignment sheet could also be created similar to this, using the vernier caliper.

14. COMPLETE the Choose the Appropriate Measuring Tool assignment sheet.
    Note: A copy of the assignment sheet is included in this guide and the apprentice guide.

15. OPTIONAL: VIEW various videotapes reviewing measuring and layout tools and their uses.
    Note: See the resource section for suggestions.

APPLICATIONS:

1. Read a rule.
2. Measure with spring calipers.
3. Measure with a micrometer.
4. Measure with a vernier caliper.
5. Scribe a line on metal.
6. Use a circumference rule.
7. Use a steel square.
8. Use a protractor to layout angles.

9. Use dividers to layout arcs and circles.

EVALUATION/CHECK OUT:

1. Submit your Identify Measuring and Layout Tools assignment sheet.
2. Submit your Drawing Lines and Objects assignment sheet.
3. Submit your Reducing Measurements assignment sheet.
4. Submit your Measuring Using a Micrometer Caliper assignment sheet.
5. Submit your Choose the Appropriate Measuring Tool assignment sheet.
6. Submit your Applications Checklist.
7. Demonstrate your knowledge of the objectives in a test situation.

EQUIPMENT:

Various measuring tools
Various layout tools
Workpieces to practice measuring

LEARNING MATERIALS:

Copies of the text, Short Course in Sheet Metal Shop Theory by Richard Budzik.

RESOURCES:

1. Audio-Visual Materials:
   The first five videotapes listed are available from Marshall Maintenance Productions, 529 S. Clinton Avenue, Trenton, New Jersey 08611. (1-800-257-0430)

   A. "The Combination Square Set"
   Nearly everyone has used a combination square, but not everyone realizes how versatile the tool is. This program covers the many uses of the square as well as the protractor and center head attachments. The film is 11 1/2 minutes long and costs $ 50.00 to rent.

   B. "The Dial Indicator"
   The dial indicator is a precise tool for measuring variations on a surface from a fixed point. This program details the many applications for this handy device. The film is 7 minutes long and costs $50.00 to rent.

   C. "The Outside Micrometer"
   This program shows and names the various parts and

adjustments of the outside micrometer. It explains how to read the graduations clearly and concisely. It shows the procedure for handling and storage of the micrometer. The film is 9 minutes long and costs $50.00 to rent.

D. "The Metric Micrometer"
This film teaches a very simple approach to learning to read any micrometer in a few minutes. This film is 9 minutes long.

E. "The Vernier Caliper"
Learn how the vernier caliper is used to make precise outside and inside measurements and how to read them step-by-step in inches. This film is 10 minutes long and costs $50.00 to rent.

F. The film "Layout Tools For Metal Work" is available from The Metalwork-Hand Tools Series, Sterling Educational Films, 241 East 34th Street, New York, NY 10016. (212-683-6300) This film covers measuring and marking tools: try squares, dividers, calipers, scribers and punches, transferring design to metal and the use of layout fluids. The film is 13 minutes long.

G. The film "Measuring Instruments" is available from the Mechanical Maintenance Basics Series, Industrial Training Corp., 14616 Southlawn Lane, Rockville, MD 20850. (301-279-2527) This film focuses on the use and care of measuring instruments, including steel rule, vernier calipers, thickness gauge and micrometers. The film is 60 minutes long.

2. Computer Software:
A. An instructional, remedial, tutorial and drill program titled "Measurement and Layout Tools" is offered by Instructional Materials Service, F.E. Box 2588, Texas A&M University, College Station, Texas 77843-2588. (409-845-6601) This program instructs the use and identification of measurement and layout tools; reading measurements on the standard English rule. This program costs $29.50.

3. Publications:
A. A booklet titled "Precision Measuring and Testing Instruments" is available through E.J. Cady and Company, 135 South Wheeling Rd., Wheeling, IL 60090 (312-537-2239)

INFORMATION SHEET

TYPES OF MEASURING EQUIPMENT AND THEIR USES

The term measuring tools applies to those devices used to determine linear or angular measurement. The measurement of distance on a straight line between two points is linear measurement. To take such measurements, there are tools such as steel rules, tapes, slide calipers, vernier calipers, and micrometer calipers.

Tools used for transferring measurements from scales to the work or from the work to the scales are outside calipers, inside calipers, and dividers. The measurement of angles, trueness of surfaces, and the relationship of one surface to another is angular measurement. Angles are measured with protractors, spirit levels, and squares.

TYPES OF RULES

STEEL RULE

The steel rule, incorrectly referred to as a scale, is the simplest measuring tool in the shop. This rule is usually 6 or 12 inches long, although there are other lengths. This rule has four scales with different divisions on the four edges. The lines representing the divisions are called graduations. The different combinations of graduations on a rule are usually given in numbers from No.1 to No. 16. For example, a rule with No. 4 graduations has the first edge in sixty-fourths, the second edge in thirty-seconds, the third edge in sixteenths, and the fourth edge in eighths.

FOLDING METAL AND WOODEN

Folding metal or wooden rulers, usually 2 to 6 feet long, are for general measuring purposes. The folding rule is not for very accurate measurement because the smallest graduation is most often 1/16 of an inch.

STEEL MEASURING TAPES

Steel measuring tapes, are made in lengths from 6 to 300 feet. The 6 foot to 16-foot tapes usually have a curved cross section so they remain rigid when extended but flexible enough to roll up. The longer tapes are flat and require support over their entire length when measuring, otherwise the natural sag causes error in reading.

Measurements are made with a rule by holding it with its edge on the surface of the object being measured. This can eliminate errors which can result because of the thickness of

the rule. Read the measurement at the graduation that coincides with the distance being measured. State the reading as so many inches and fractions of an inch.

Rules and tapes are precision made and, like all tools, the quality of service depends upon the care it receives. Following are some suggestions:

1. Wipe frequently with an oily cloth to prevent the formation of rust.
2. An occasional cleaning with fine steel wool will keep the graduations legible.
3. Use the rule carefully so that the ends and edges do not become necked or worn.
4. Use the correct rule for the job at hand. Example: Use a rigid rule to measure the length of screws and bolts and the outside diameter of a pipe. Measure the width of a board with a tape measure.
5. Coat the tool with wax or a rust preventative if it is to be stored for a prolonged period.

TYPES OF CALIPERS

OUTSIDE AND INSIDE CALIPERS

Calipers are designed for transferring measurements from measuring tools to the workpiece or from the workpiece to measuring tools. The two most widely used calipers are: outside calipers for transferring outside measurements, and inside calipers for transferring inside measurements. Calipers are also classified by their joint or hinge, and how their adjustments are made.

The firm joint caliper has the simplest construction. This caliper depends on friction to keep its legs in position after they have been set. The firm joint caliper is the least accurate and the most difficult to adjust; however, firm joint calipers with a screw adjustment are quite accurate.

The legs of spring joint calipers are spread by the tension of a spring against an adjusting nut, which turns on a screw through one of the legs. The points are adjusted by tightening or loosing the adjusting nut.

Lock joint transfer-type outside and inside calipers make it possible to transfer measurements from the inside of cavities, over flanges, and other places where it is necessary to move the legs after they have been set to size. After the legs are set and the joint is locked using the large knurled nut the transfer and binding nut is loosened and one leg is swung away to clear the obstruction. The leg is then moved back against the transfer arm slot on the short

arm and the exact size can be transferred to a ruler for measurement.

Inside or hole diameters are measured with inside calipers. They have straight legs with feet turned outward. To measure the diameter of the hole, hold one caliper leg in contact with one side of the hole. Increase the setting of the caliper and move the other leg from right to left and in and out of the hole. When the caliper is spread to the widest possible point, then remove the caliper and measure the setting with a rule.
To set outside calipers to a particular measurement, open them to the approximate setting. Then place the calipers on the rule and make the final setting by sighting over the leg on the scale and adjusting the leg to the proper dimension. Accuracy of reading depends on proper sighting, reading, adjusting, and feel.

SLIDE CALIPERS

The slide caliper, or sometimes called the caliper rule, are pocket tools. They are made in 3-inch and 5-inch sizes and graduations are in thirty-seconds and sixty-fourths of an inch. They are used where extreme precision is not required.

Slide calipers measure both inside and outside diameters. A locking screw holds the slide caliper jaws in position to maintain the setting. The words "IN" and "OUT" are stamped on the frame near the stationary jaw under the two reference lines, and are for reading the scale while making inside or outside measurements. The reference lines are separated by the distance equal to the outside dimensions of the rounded tips when the caliper is closed.

The outside diameter of round stock is measured by moving the jaws of the caliper into firm contact with the surface of the stock. Read the measurement at the reference line marked OUT. The inside diameter of a hole, or the distance between two surfaces, is measured by inserting only the rounded tips of the caliper jaws into the hole or between two surfaces. The measurement is read on the reference line stamped IN.

VERNIER CALIPERS

A vernier caliper consists of an L-shaped frame with an engraved scale and a sliding jaw to match the arm of the L. Usually one side of the caliper is calibrated for outside measurements and the other side is calibrated for inside measurements. The advantage of a vernier caliper over the slide caliper is that more precise measurements can be made because of the vernier scale. Pocket-model verniers measure from 0 to 3 inches. Verniers also come in sizes up to 4 feet long. When using vernier calipers you must be able to read a vernier scale.

As with any precision measuring tool, the vernier caliper must not be forced on the work. Slide the assembly until the jaws almost contact the work. Lock the clamping screw and make the final adjustment with the fine adjusting nut. The jaws must engage the work firmly but not tightly. Lock the unit to the beam, remove it from the work carefully, and make your reading.

MICROMETER CALIPER

The micrometer caliper is better known as a micrometer or "mike." It works on the principle of recording the advance of a fine pitch screw through any number of turns or fraction of a turn. The micrometer consists principally of a highly accurate ground screw, or spindle, which is rotated in a fixed nut, thus opening or closing the distance between two measuring faces on the ends of the anvil and spindle. A piece of work is measured by placing it between the anvil and the spindle face and rotating the spindle by means of a thimble until the anvil and spindle both contact the work. The dimension of the workpiece is found by reading the indicated graduations on the sleeve.

On micrometers graduated to measure in inches, the pitch of the screw thread on the spindle is 1/40 of an inch, or 40 threads per inch. One complete revolution of the thimble advances the spindle face toward or away from the anvil face exactly 1/40 or 0.025 of an inch.

The longitudinal line on the sleeve is divided into 40 equal parts that correspond to the number of threads on the spindle. Therefore, each vertical line is 1/40 or 0.025 inch and every fourth line which is longer than the others designates hundreds of thousandths of and inch. For example, the line marked "1" represents 0.100 inch, and "2" is 0.200 inch.

The beveled edge of the thimble is divided into 25 equal parts with each line representing 0.001 inch. The lines are numbered consecutively. Rotating the thimble from one of these lines to the next moves the spindle 0.001 inch, two divisions moves the spindle 0.002 inch. To move through twenty-five divisions is one complete revolution, or 0.025 inch.

To read the micrometer in thousandths of an inch, multiply the number vertical divisions visible on the sleeve by 0.025 and add the number of thousandths indicated by the line on the sleeve.

Small micrometers, such as the 0 to 1 inch, measure small work. The micrometer is held in the palm of the right hand with the knurled portion of the thimble between the thumb and the forefinger. The frame is held downward with either or

both small fingers, pressing the micrometer against the heel of the hand for firm support. The piece to be measured is held with the left hand. The thimble is turned with the thumb and forefinger of the right hand to advance the spindle until it touches the piece with a slight pressure. The applied pressure by the micrometer should be enough to make it snug but free enough to allow it to slide over the work with a slight drag.

HERMAPHRODITE CALIPER

The hermaphrodite caliper is used to mark a line parallel to an edge. It is particularly useful in drawing several lines parallel to each other. When used in this manner, it is a layout tool. The caliper is also used to measure from the edge to a groove or from an edge to the edge of hole.

Following are some suggestions for proper care of calipers:

1. Never place calipers on work that is revolving in a machine.
2. Keep cleaned and lightly oiled.
3. Check the accuracy of vernier calipers periodically by measuring an object of known dimensions.
4. Follow the manufacturer's recommendations for adjusting the accuracy of vernier calipers.
5. Store vernier calipers in a wooden box lined with cloth.
6. Protect anvil and spindle faces on micrometers from damage and never clean with an abrasive or a file.

TYPES OF SQUARES

Squares are primarily aids for checking the trueness of angles and for laying out angles and lines on materials. Most squares have a scale marked on their edge for measuring.

STEEL SQUARE

The steel square, also called a framing square, has two arms at right angles to each other. The longer arm is the "body" or "blade" and the shorter arm is the "tongue." The length of these two arms is usually 24 inches and 16 inches, respectively. Each edge of an arm contains a scale with divisions in eighths and sixteenths of an inch. The most common uses for the steel square are laying out and squaring up large work, and for checking the flatness and the squareness of large surfaces. To square a piece, place the square at right angles to adjacent surfaces and observe if any light shows between the work and the square. The object is not square if light is seen.

TRY SQUARE

The try square has two parts at right angles to each other; a thick handle and a thin steel blade. Most try squares have a scale on the blade for measuring. The blade length varies from 2 inches to 12 inches. The try square is for setting and checking lines on surfaces that must be at right angles to each other.

COMBINATION SQUARE

A combination square has movable and interchangeable heads called a SQUARE head, a PROTRACTOR head, and a CENTER head. Most often only one head at a time is used on a thin blade that has four engraved scales, two on each side. Combination squares have a wide range of applications and are among the most useful tools that a craftsman has.

A combination square consists of a tempered steel blade, with a scale, on which is mounted one of the three interchangeable heads. The heads slide on the blade in a central groove to permit easy adjustment. They can be adjusted to any position along the blade, and they can easily be removed to allow separate use of the square head as a level and the blade as a ruler.

Following are some suggestions to follow to properly care for squares.

1. Keep the blades and heads of combination sets clean.
2. Apply a light coat of oil on all metal surfaces to prevent rusting.
3. Wipe off oil before using.
4. Store squares away from other tools to prevent damage.

TYPES OF GAUGES

Gauging, which is the term used when checking parts with various gauges, differs somewhat from measuring. Measuring requires the skillful use of precision measuring tools to determine the exact size of the piece; whereas, gauging simply shows whether the piece is made within specified tolerances. Listed below are various types of gauges:

1.	Plug gauge	Checks hole diameters.
2.	Go and no-go gauge	Checks the upper and the lower dimension limits of a part.
3.	Ring gauge	Checks external diameters and roundness

4.	Snap gauge	Used as a ring gauge.
5.	Thread plug and ring gauge	Checks threads for the correct thread fit.
6.	Radius and fillet gauge	Checks radius on inside and outside corners.
7.	Screw pitch gauge	Checks number of threads per inch.
8.	Center gauge	Checks thread-cutting tools for proper grinding angles and alignment on machine tools.
9.	Drill-point gauge	Checks drill-points for the correct 59 degree angles.
10.	Dial indicator	Used to check alignment of workpiece or machine parts.

PARTS OF A MICROMETER

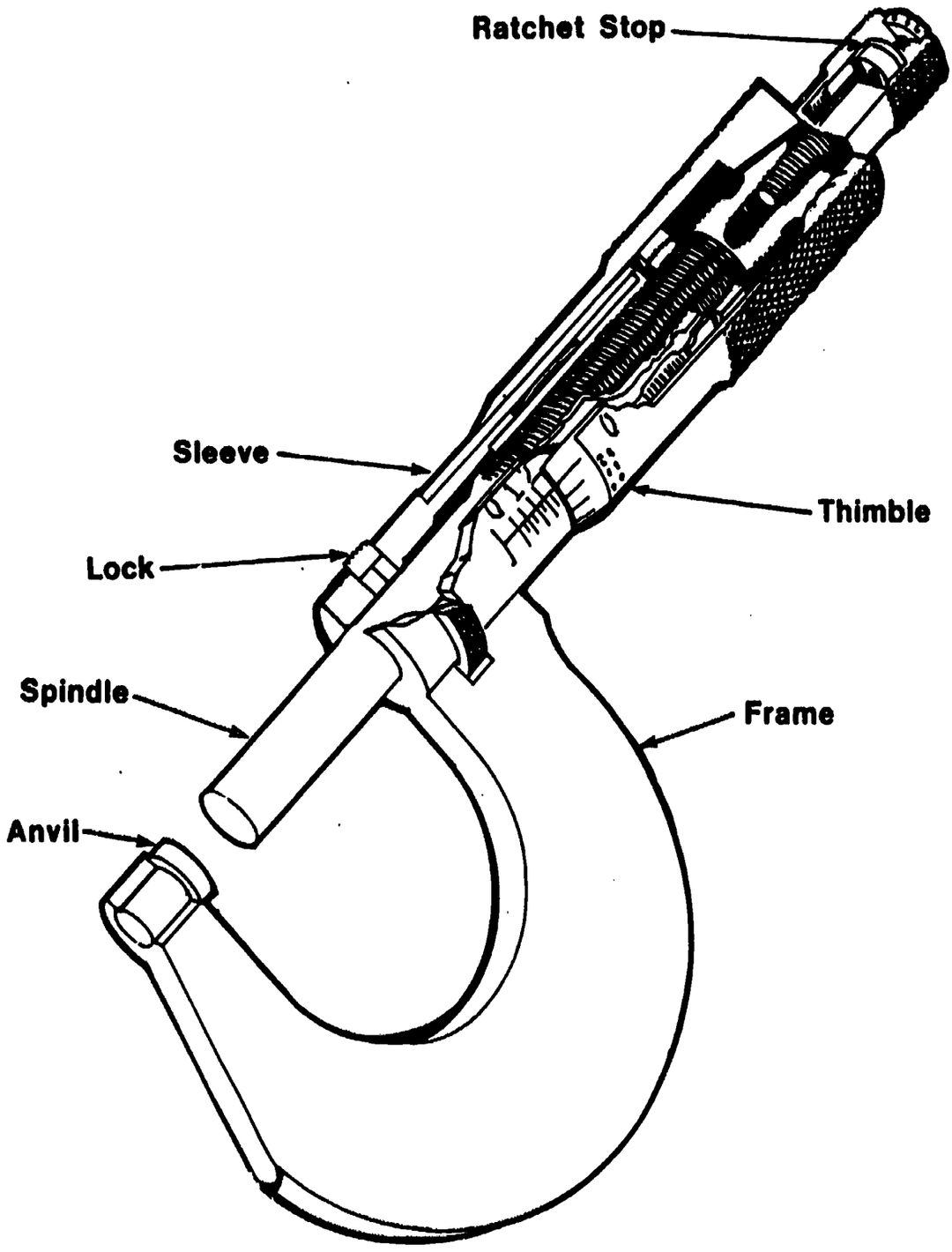

SLEEVE GRADUATIONS FOUND ON A MICROMETER

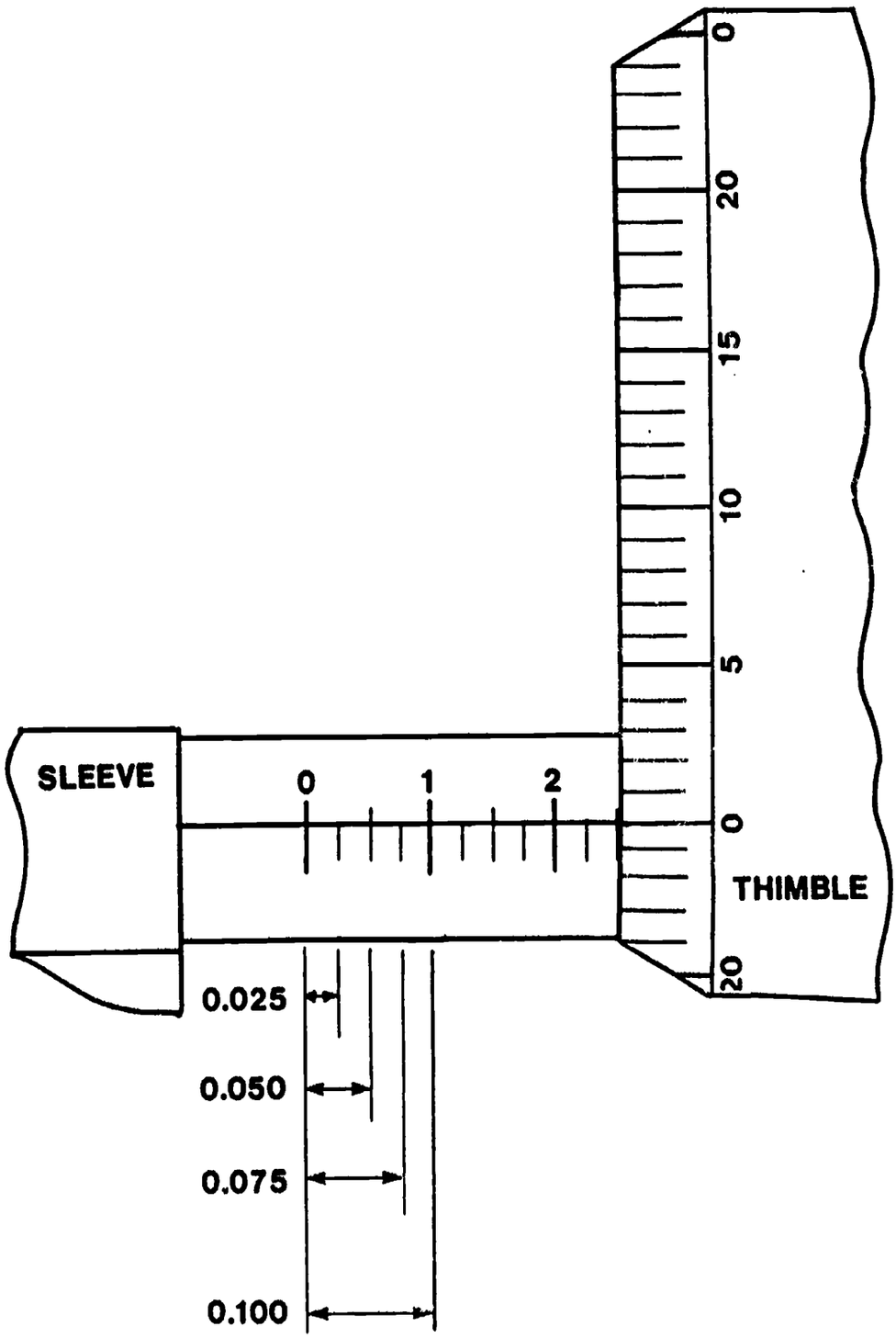

THIMBLE GRADUATIONS FOUND ON A MICROMETER

Thimble has 25 Graduations to 24 on the Sleeve Scale

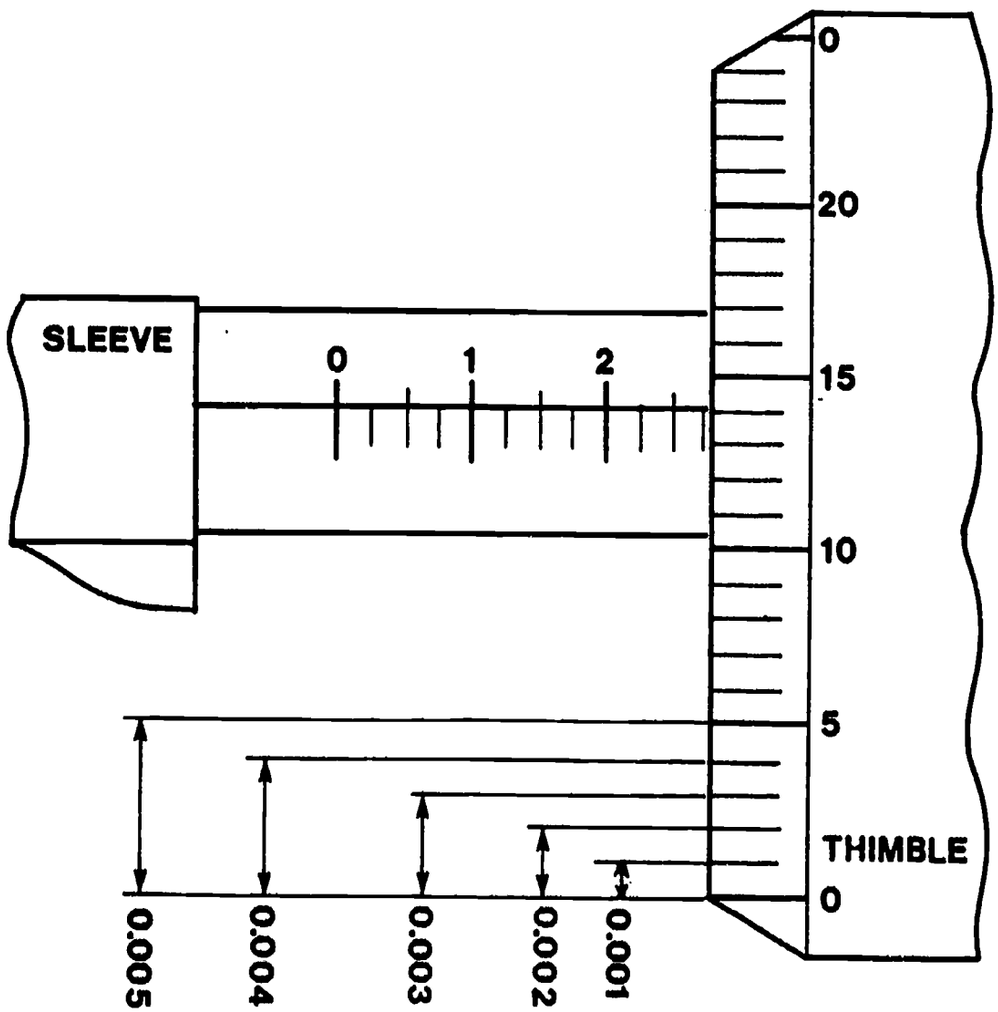

172

PARTS OF A VERNIER CALIPERS

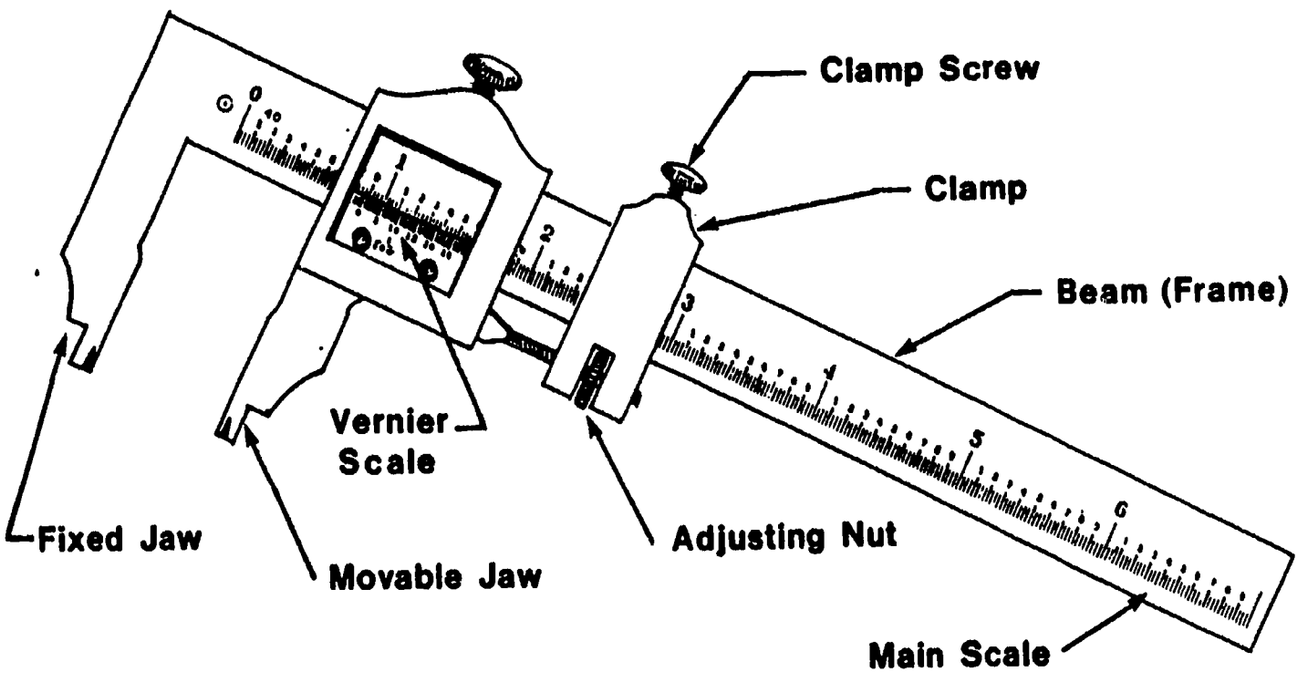

VERNIER SCALE GRADUATIONS

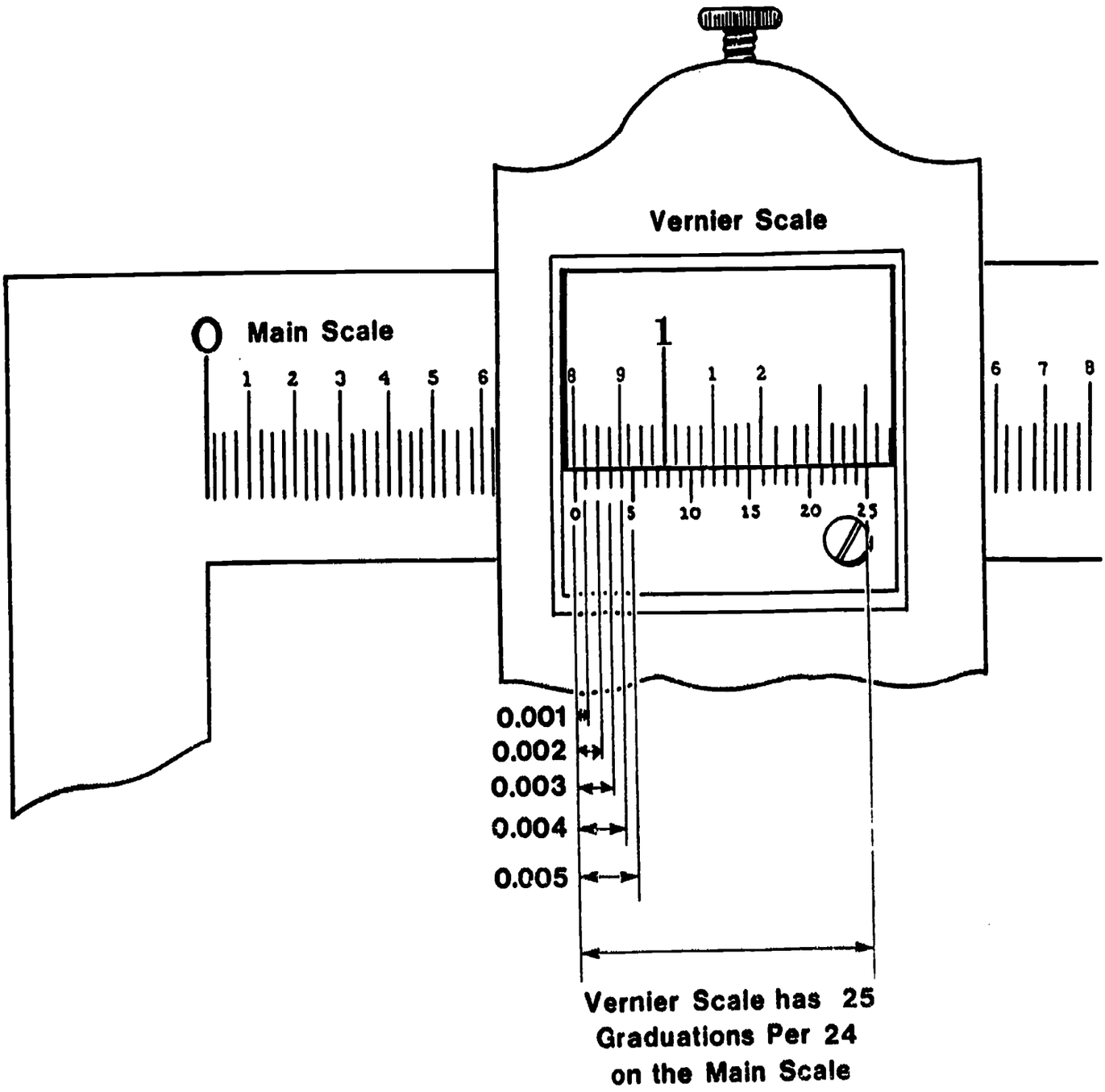

BEAM GRADUATIONS FOUND ON A VERNIER CALIPERS

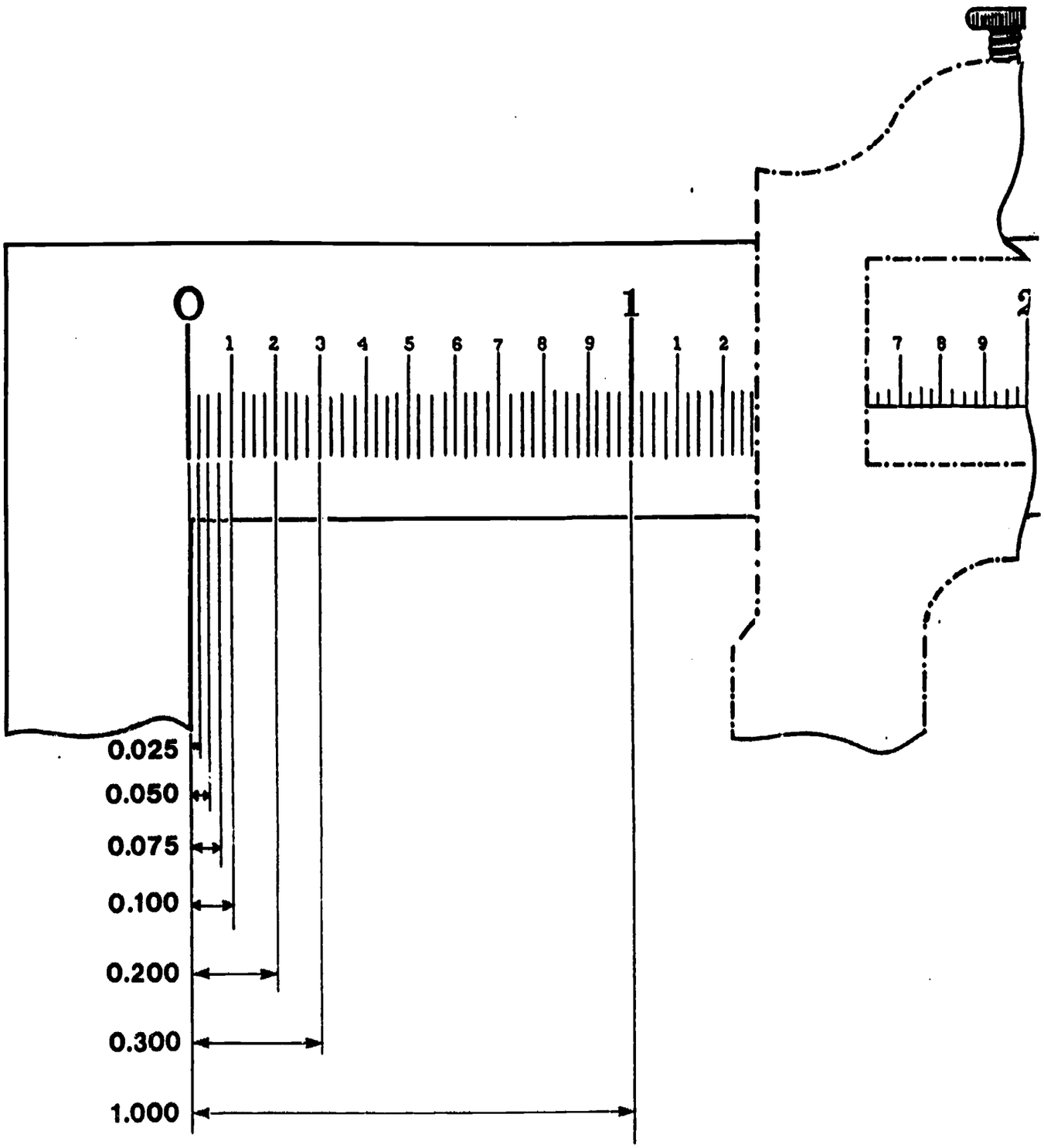

ASSIGNMENT SHEET

IDENTIFY MEASURING AND LAYOUT TOOLS

In your classroom your instructor has numbered several measuring and layout tools. Identify each of the tools and describe its purpose below.

	TOOL NAME	PURPOSE
1.		
2.		
3.		
4.		
5.		
6.		
7.		
8.		
9.		
10.		

ASSIGNMENT SHEET

DRAWING LINES AND OBJECTS

Use a ruler to complete the following.

1. Draw lines the following lengths.

   a. 3 1/8"

   b. 1 3/4"

   c. 2 1/4"

   d. 4 3/16"

   d. 2 15/16"

2. Draw squares with each side the following lengths.

   a. 3"

   b. 2 3/8"

3. Draw triangles with the following sides.

a. 1 3/4" x 2" x 2 1/4"

b. 1" x 1 7/8" x 2"

ASSIGNMENT SHEET

REDUCING MEASUREMENTS

Reduce each of the following lengths to their smallest form. Use feet and inches for each. Use the back of the page for figuring your work.

1. 13 inches = _____ foot _____ inches
2. 9 inches = _____ feet _____ inches
3. 15 inches = _____ foot _____ inches
4. 25 inches = _____ feet _____ inches
5. 16 3/4 inches = _____ foot _____ inches
6. 21 15/16 inches = _____ foot _____ inches
7. 19 7/8 inches = _____ foot _____ inches
8. 5 4/8 inches = _____ feet _____ inches
9. 11 14/16 inches = _____ feet _____ inches
10. 26 6/8 inches = _____ feet _____ inches
11. 34 2/8 inches = _____ feet _____ inches
12. 21 11/4 inches = _____ foot _____ inches
13. 8 16/8 inches = _____ feet _____ inches
14. 48 17/16 inches = _____ feet _____ inches
15. 72 inches = _____ feet _____ inches
16. 96 inches = _____ feet _____ inches
17. 120 inches = _____ feet _____ inches
18. 168 inches = _____ feet _____ inches
19. 30 15/16 inches = _____ feet _____ inches
20. 1 yard 19 21/16 inches = _____ feet _____ inches

ANSWERS TO REDUCING MEASUREMENTS ASSIGNMENT SHEET

1. 1 foot 1 inch
2. 9 inches
3. 1 foot 3 inches
4. 2 feet 1 inch
5. 1 foot 4 3/4 inches
6. 1 foot 9 15/16 inches
7. 1 foot 7 7/8 inches
8. 5 1/2 inches
9. 11 7/8 inches
10. 2 feet 2 3/4 inches
11. 2 feet 10 1/4 inches
12. 1 foot 11 3/4 inches
13. 10 inches
14. 4 feet 1 1/16 inches
15. 6 feet
16. 8 feet
17. 10 feet
18. 14 feet
19. 2 feet 6 15/16 inches
20. 4 feet 8 5/16 inches

ASSIGNMENT SHEET

MEASURE USING A MICROMETER CALIPER

Your instructor has tagged and numbered various workpieces. Using the micrometer caliper, measure each workpiece and record your findings on the lines below.

1. _____
2. _____
3. _____
4. _____
5. _____
6. _____
7. _____
8. _____
9. _____
10. _____
11. _____
12. _____

ASSIGNMENT SHEET

CHOOSE THE APPROPRIATE MEASURING TOOL

Your instructor has created a series of various measuring jobs. You are to choose the correct measuring tool to use in each situation and record it on the following lines.

1. _____

2. _____

3. _____

4. _____

5. _____

6. _____

7. _____

8. _____

9. _____

10. _____

SAMPLE TEST QUESTIONS

MEASURING AND LAYOUT TOOLS

Fill in the blanks:

1. The smallest graduation on a steel rule are in _____ of an inch.

2. When measurements are made with a rule, hold the rule with its _____ against the surface of the object.

3. The length of screws and bolts is measured by holding them against a _____ rule.

4. A tool designed for transferring outside measurements from the measuring rule to workpiece is and outside _____.

5. The advantage of a vernier caliper over the slide caliper is that more _____ measurements can be made.

6. A pocket caliper that gives a direct reading of its setting is the _____ caliper.

7. The two faces between which measurements are made with a micrometer are on the ends of the _____ and the _____.

8. When measuring with a micrometer enough pressure should be applied to make it snug but free to slide over the work with a slight _____.

9. A tool used for laying out lines or checking the trueness of angles is the _____.

10. The movable and interchangeable heads of a combination square are the _____ head, _____ head, and _____ head.

11. Combination squares are used primarily for _____ work and _____ measurements.

12. _____ are used to layout arcs and circles on metal and to mark off equal distances on lines.

13. _____ are used like dividers but for longer dimensions and are used with a long narrow piece of wood.

14. When laying out angles, the easiest method to use is the

_____.

15. A _____ is used to scribe or draw lines.

Multiple choice:

1. Which of the following tools are designed for transferring measurements from scales to work or work to scales?
   a. steel rule and tape measure
   b. vernier calipers
   c. slide calipers and protractors
   d. outside and inside calipers

2. A steel rule used to obtain measurements more accurate than 64ths of an inch has graduations in _____.
   a. sixteenths and thirty-seconds
   b. eights and sixteenths
   c. hundredths and thousandths
   d. tenths and hundredths

3. Folding rules are not for very accurate measurements because the smallest graduation of an inch is most often _____.
   a. 1/100
   b. 1/64
   c. 1/32
   d. 1/16

4. The two most widely used calipers for transferring measurements are _____.
   a. vernier and slide
   b. outside and inside
   c. micrometer and vernier
   d. micrometer and slide

5. A slide caliper is a measuring tool for _____.
   a. transferring measurements
   b. angular measurements
   c. direct reading measurements
   d. level measurements

6. A vernier caliper gives more precise measurements than a slide caliper because it has _____.
   a. an L-shaped frame
   b. both inside and outside scales
   c. precision jaws
   d. a vernier scale

7. One complete revolution of a micrometer thimble advances or retracts the spindle face from the anvil face exactly _____.
   a. 2.50 inches
   b. 0.25 inches

c. 0.025 inch

8. A micrometer for measuring the wall thickness of tubing, pipe, and rings has an anvil that is _____.
   a. rounded
   b. concave
   c. square-faced
   d. flat-faced

9. The steel square has two arms at right angles to each other and is also called a _____.
   a. combination square
   b. framing square
   c. try square
   d. joint square

10. The combination square can serve as which of the following?
   a. center gage
   b. try square
   c. level
   d. all of the above

Complete the questions:

1. List the steps for making a perpendicular line.

   a. _____

   _____

   b. _____

   _____

   c. _____

   _____

   d. _____

   _____

2. List the steps to follow when using a swinging blade protractor.

   a. _____

   _____

   b. _____

   _____

   c. _____

d. _____

_____

e. _____

_____

ANSWERS TO SAMPLE TEST QUESTIONS

Fill in the blank:

1. hundredths
2. edge
3. rigid
4. caliper
5. precise
6. slide
7. anvil and spindle
8. drag
9. square
10. square, protractor, center
11. square, transferring
12. dividers
13. trammel points
14. protractor
15. scratch awl

Multiple choice:

1. d
2. d
3. d
4. b
5. c
6. d
7. c
8. a
9. b
10. d

Complete the questions:

1. a. Scribe a baseline on the metal, if an edge of the sheet is not to be used.
   b. Place the blade edge of the square on the baseline.
   c. Adjust the heel so that the tongue of the square is perpendicular to the baseline at the point the line is to be drawn.
   d. Hold the square firmly and scribe a line along the tongue edge.

2. a. Loosen the locknut of the protractor.
   b. Rotate the blade to the right or left until the indicator lines up with the desired angle on the scale.
   c. Tighten the locknut.
   d. Slide the inner side of the protractor head along the edge of the sheet until the blade edge lines up with the vertex location.
   e. Use a scratch awl to scribe a line along the blade to make the required angle from the edge of the sheet.

PATTERN DEVELOPMENT

COMPETENCY:

Use parallel lines, radial lines, triangulation, and combination methods of development to complete basic and complex sheet metal layouts.

OBJECTIVES:

1. Explain when each of the pattern development methods are used.
2. Identify the types of fittings that are made using parallel line development, radial line development, and triangulation.
3. Describe the procedure for laying out a round taper pattern.
4. State the principles of parallel line development.
5. Explain the adaptation of the principles of parallel line development to round pipe fittings.
6. State the principle for the development of the intersection line of two pipes, or the miter line.
7. State the principles and procedures for triangulation.
8. Describe how to determine true lengths for pattern layout.
9. Explain the application of triangulation to the pattern layout for a round taper.
10. State the principles and procedures for radial line development.

LEARNING ACTIVITIES:

1. COMPLETE the readings and labs as assigned on the Commonly Used Fittings assignment sheet.
   Note: A copy of the sheet is included in this guide and the apprentice guide.

2. COMPLETE the readings and labs as assigned on the Round Fittings assignment sheet.
   Note: A copy of the sheet is included in this guide and the apprentice guide.

3. COMPLETE the readings and labs as assigned on the Triangulation assignment sheet.
   Note: A copy of the sheet is included in this guide and the apprentice guide.

APPLICATIONS:

1. Layout out a rectangular duct with a double angle to given standards using parallel line development.
2. Layout a pattern for intersecting pipes to given standards using parallel line development.
3. Layout a pattern for round elbows to given standards using parallel line development.
4. Layout a pattern for a pyramid to given standards using triangulation.
5. Layout a pattern for a rectangular transition to given standards using triangulation.
6. Layout a pattern for a round taper to given standards using triangulation.
7. Layout a pattern for a round taper to given standards using radial line development.
8. Layout a taper on a pitch pattern to given standards using radial line development.

EVALUATION/CHECK OUT:

1. Submit the following assignment sheets:
   - Commonly Used Fittings
   - Round Fittings
   - Triangulation
2. Submit your completed Applications Checklist

LEARNING MATERIALS:

1. A copy of the text, Today's 40 Most Frequently Used Fittings by Richard Budzik.
2. A copy of the text, Practical Sheet Metal Layout: Round Fittings Used Today Including Methods and Techniques of Fabricating Round Work by Richard Budzik.
3. A copy of the text, Practical Sheet Metal Layout: Fittings Used Today that Require Triangualtion Including the Theory of Triangulation, by Richard Budzik.

COMMONLY USED FITTINGS

ASSIGNMENT SHEET

This assignment sheet corresponds with the book, Today's 40 Most Frequently Used Fittings, 4th Edition by Richard Budzik.

Check with your instructor to determine which of the following activities you need to complete. Place a check before those fittings in the "Assigned" column. After you have completed the fittings, you instructor will initial your successful completion in the "Completed" column.

ASSIGNED	COMPLETED	FITTING NUMBER	PAGE NUMBER	DESCRIPTION
_____	_____	1	50	Square Pipe
_____	_____	1-1	52	Rectangular Pipe
_____	_____	2	54	90 degree Square Elbow with Square Throat and Heel
_____	_____	3	56	90 degree Change Elbow with Square Throat and Heel
_____	_____	4	58	90 degree Curved Elbow with Square Throat
_____	_____	5	60	90 degree Change Elbow with Curved Troat
_____	_____	6	62	90 degree Change Elbow with Curved Traot and and Heel
_____	_____	7	64	90 degree Elbow with Square Troat and Curved Wrapper
_____	_____	8	66	45 degree Angle Elbow with Curved Throat and Heel
_____	_____	9	68	45 degree Angle Change Elbow with Curved Throat and Heel

_____	_____	10	70	90 degree Clinch Tee with Curved Troat and Straight Back (4-piece pattern with closed or full corners)
_____	_____	10 A	72	Short Method for Fitting 10 (2-piece pattern with open corners)
_____	_____	11	74	90 degree Two-Way Y Branch with Curved Throat and Heel
_____	_____	12	76	Angle Two-Way Y Branch with Straight Throat and Heel
_____	_____	13	78	90 degree One-Way Y Branch with Curved Throat and a Combined Straight and Curved Heel
_____	_____	13 A	80	Short Method for Fitting 13 (3-piece pattern with heel and cheeks as one pattern)
_____	_____	14	82	Change Joint with Three Sided Straight
_____	_____	14 A	84	Short Method for Fitting 14 (one-piece pattern)
_____	_____	15	86	Change Joint - Center Flare, Two Sides Straight
_____	_____	15 A	88	Short Method for Fitting 15 (one-piece pattern)
_____	_____	16	90	Change Joint with Offset, Two Sides Straight
_____	_____	17	92	Change Joint - Center Flare, Straight on Both Ends

_____	_____	18	94	Offset with Straight Heels
_____	_____	18 A	96	Short Method for Fitting 18 (2-piece pattern)
_____	_____	19	98	90 degree Elbow with Square Throat and Heel Combined
_____	_____	20	100	90 degree Left-Handed Rectangular Change Elbow (also known as a Goldberg or Airplane)
_____	_____	21	102	90 degree Center Flare-Rectangular or Rectangular Elbow
_____	_____	22	104	Plain Offset with Curved Heels
_____	_____	23	106	Change Offset with Curved Heels
_____	_____	24	108	Transition Change Joint with Two Sides Straight
_____	_____	24 A	110	Short Method for Fitting 24 (1-piece pattern)
_____	_____	25	112	Transition Change Joint- Flare with One Side Straight
_____	_____	25 A	114	Short Method for Fitting 25 (one-piece pattern)
_____	_____	26	116	Transition Change Joint- Center Flare, Straight on Both Ends, One Side Straight
_____	_____	27	118	Double Offset with Flat Cheeks and Heels
_____	_____	28	120	90 degree Square Throat and Heel Transition Elbow

_____	_____	29	122	Plain Transition Offset
_____	_____	30	124	Transition Change Offset
_____	_____	31	126	90 degree Transition Elbow
_____	_____	32	128	90 degree Transition Change Elbow
_____	_____	33	130	90 degree Transition Y Branch
_____	_____	34	132	2-Way Transition Y Branch - Straight One Way and 90 degree One Way
_____	_____	35	136	Round 4-Piece Elbow
_____	_____	36	138	90 degree Tee Intersecting a Round Pipe
_____	_____	37	142	45 degree Tee Intersecting a Round Pipe
_____	_____	38	146	Round 3-Piece Offset
_____	_____	39	150	Square to Round
_____	_____	40	152	Round Taper
_____	_____	40 A	154	Short Method for Fitting 40
_____	_____		156	Special Advanced Fitting - Transition Joint with all Sides Tapering and Changing

SUPPLEMENTAL ACTIVITIES

_____	_____	S1	158	End Caps
_____	_____	S2	160	4-Piece Crossbroken Plenum with Sunk End Cap
_____	_____	S3	162	Filter Box - Single

_____	_____	S4	164	Flexible Connection
_____	_____	S5	166	Roof Curb
_____	_____	S6	168	Hood - Pittsburg Seam Construction
_____	_____	S7	170	135 degree Gooseneck with Curved Heel and Throat
_____	_____	S8	172	Louver - Rectangular
_____	_____	S9	174	Access Door - Hinged
_____	_____	S10	176	Straight Clinch Tee
_____	_____	S11	178	Clinch Tee - Straight 45 degree Throat (4-piece)
_____	_____	S12	180	Change Elbow for Air Cleaner
_____	_____	S13	182	Tee on a Pitch
_____	_____	S14	184	Curved Tee on Curved Elbow
_____	_____	S15	186	Clinch "T" Straight 45 degree Throat with Poke Damper
_____	_____	S16	188	Belt Guard
_____	_____	S17	190	Mitered Pipe
_____	_____	S18	192	Square Louver with Outside Flange
_____	_____	S19	194	Curved Elbow with Splitter Vanes
_____	_____	S20	196	Clinch T-Flat Cheeks (4-piece)
_____	_____	S21	198	Corner Elbow with Clinch Edge
_____	_____	S22	200	Angle Elbow with 3 Movable Vertical Direction Vanes

_____	_____	S23	202	Transition Joint with T - Take-Off
_____	_____	S24	204	Closed Radius Pipe
_____	_____	S25	206	Transition Plenum
_____	_____	S26	208	Two-Way Angle Y Branch 45 degree and 60 degree
_____	_____	S27	210	90 degree Three-Way Y Branch with Curved Throat and Heel
_____	_____	S28	212	Transition Y Branch with Square Throats and Straight Heel
_____	_____	S29	214	45 degree Transition Change Angle
_____	_____	S30	216	90 degree Transition Change Elbow - Center Flare
_____	_____	S31	218	Transition Offset Elbow
_____	_____	S32	222	Transition Change Offset Elbow
_____	_____	S33	226	Double Offset
_____	_____	S34	228	Double Transition Offset
_____	_____	S35	230	90 degree Transition Change Elbow with Square Thraot and Curved Wrapper
_____	_____	S36	232	Change Joint with Three Sides Straight
_____	_____	S37	232	Change Joint - Center Flare, Two Sides Straight
_____	_____	S38	236	Transition Offset Change Joint with Three Sides Tapering
_____	_____	S39	238	Transition Change Joint With All Sides Tapering

_____	_____	S40	240	Transition Change Joint With all Sides Tapering
_____	_____	S41	242	Transition Change Joint With All Sides Tapering
_____	_____	S42	244	Transition Change Joint With 4 Sides Tapering
_____	_____	S43	246	Rectangular Pipe
_____	_____	S44	248	90 degree Straight Elbow
_____	_____	S45	250	90 degree Straight Change Elbow
_____	_____	S46	252	Curved Elbow
_____	_____	S47	256	Plain Change Joint
_____	_____	S48	258	90 degree Curved Change Elbow

ROUND FITTINGS

ASSIGNMENT SHEET

This assignment sheet corresponds with the book, Practical Sheet Metal Layout: Round Fittings Used Today Including Methods and Techniques of Fabricating Round Work, second edition, by Richard Budzik.

Check with your instructor to determine which of the following activities you need to complete. Place a check before those fittings in the "Assigned" column. After you have completed the fittings, you instructor will initial your successful completeion in the "Completed" column.

ASSIGNED	COMPLETED	FITTING NUMBER	PAGE NUMBER	DESCRIPTION
		ROUND FITTINGS		
_____	_____	1	2	Round Pipe
_____	_____	2	4	Round Drawband
_____	_____	3	6	2-Piece 45 degree Round Angle
_____	_____	3A	8	Quarter Pattern Method for Round Elbows, Angles, and Offsets
_____	_____	4	10	2-Piece 30 degree Round Angle
_____	_____	4A	12	3-Piece 45 degree Round Angle
_____	_____	4B	14	4-Piece 60 degree Round Angle
_____	_____	4C	16	5-Piece 80 degree Round Angle
_____	_____	5	18	2-Piece 90 degree Round Elbow
_____	_____	6	20	3-Piece 90 degree Round Elbow

_____	_____	7	22	4-Piece 90 degree Round Elbow
_____	_____	7A	24	Radius Method for Round Elbows, Angles and Offsets
_____	_____	8	26	5-Piece 90 degree Round Elbow
_____	_____	8A	28	7-Piece 90 degree Round Elbow
_____	_____	8B	30	9-Piece 90 degree Round Elbow
_____	_____	8C	32	11-Piece 90 degree Round Elbow
_____	_____	9	34	Round Offset
_____	_____	9A	36	Rise Method for Round Elbows, Angles and Offsets
_____	_____	10	38	Round Roof Jack on an Angle
_____	_____	11	40	Round Roof Jack on a Corner or Ridge
_____	_____	12	42	Rectangular Tee Intersecting a Round Pipe at a 90 degree on Center
_____	_____	13	44	Square Tee Intersecting a Round Pipe at a 45 degree Angle
_____	_____	14	46	Round Tee Instersecting a Round Pipe at a 90 degree Angle - Equal Diameters
_____	_____	14A	48	Round Tee Intersecting a Round Pipe at a 90 degree Angle - Unequal Diameters
_____	_____	15	50	Round Tee Intersecting a Round Pipe at a 90 degree Angle - Flat on One Side

_____	_____	16	52	Round Tee Intersecting a Round Pipe at a 45 degree Angle - Equal Diameters
_____	_____	16A	54	Round Tee Intersecting a Round Pipe at a 45 degree Angle - Unequal Diameters
_____	_____	17	56	Round Tee Intersecting a Round Pipe at a 45 degree Angle - Flat on One Side
_____	_____	18	58	2-Way Round Y Branch with Equal Diameters
_____	_____	19	60	Round Vertical Tee on a 3-Piece 90 degree Round Elbow
_____	_____	20	62	Round Boot Tee on Round Pipe
_____	_____	21	64	Round Equal Taper
_____	_____	21A	66	Round Equal Taper - Slight Variation in Diameters
_____	_____	22	68	Round Equal Taper - One Side Straight
_____	_____	23	70	Round Offset - Equal Taper
_____	_____	24	72	Round Weather Cap (Discharge Stack)
_____	_____	25	74	Round Ventilator
_____	_____	26	74	Round Tapering Roof Jack
_____	_____	27	78	Round Tapering Tee Intersecting a Round Pipe at a 90 degree Angle
_____	_____	28	80	Round Tapering Tee Intersecting a Round Pipe at a 45 degree Angle

_____	_____	29	82	Round Tee Intersecting a Taper at a 90 degree Angle
_____	_____	30	84	Round Tee Intersecting a Taper at a 45 degree Angle

OBLONG FITTINGS

_____	_____	1	90	Oblong Pipe
_____	_____	2	92	90 degree Oblong Elbow (Horizontal)
_____	_____	2A	94	90 degree Oblong Elbow (Vertical)
_____	_____	2B	96	45 degree Oblong Angle (Horizontal)
_____	_____	3	98	Oblong Offset (Horizontal)
_____	_____	3A	100	Oblong Offset (Vertical)
_____	_____	4	102	Oblong Tee on a Round Pipe
_____	_____	5	104	Oblong Boot Tee
_____	_____	6	108	45 degree Oblong Angle Tee
_____	_____	7	110	Oblong to Round Taper - Diameter Wqual to Width
_____	_____	8	112	Oblong to Oblong Taper - Three Sides Straight and Equal Widths

TRIANGULATION

ASSIGNMENT SHEET

This assignment sheet corresponds with the book, Practical Sheet Metal Layout: Fittings Used Today that Require Triangulation, Including the Theory of Triangulation, second edition, by Richard Budzik.

Check with your instructor to determine which of the following activities you need to complete. Place a check before those fittings in the "Assigned" column. After you have completed the fittings, you instructor will initial your successful completion in the "Completed" column.
Check with your instructor to determine which of the following activities to complete. Place a check next to those activities under the "ASSIGNED" column. Layout the fittings as assigned.

ASSIGNED	COMPLETED	FITTING NUMBER	PAGE NUMBER	DESCRIPTION
_____	_____	1	2	Transition Change Joint All Sides Tapering
_____	_____	2	6	Exhaust Hood
_____	_____	3	8	Transition Chenge Joint with all sides tapering
_____	_____	4	12	Twisted Transition with all sides tapering
_____	_____	5	16	Double Offset
_____	_____	6	18	Double Transition Offset
_____	_____	7	20	Transition Offset Angle
_____	_____	8	24	Transition Offset Elbow
_____	_____	9	28	Transition Change Offset Elbow
_____	_____	10	32	Transition Change Offset Y-Branch with Straight Throat and Heel
_____	_____	11	34	Transition Change Offset Y Branch
_____	_____	12	38	Square to Round

_____	_____	13	40	Rectangular to Round Short Method
_____	_____	14	42	Rectangular to Round with Seams on the Corners
_____	_____	15	44	Rectangular to Round
_____	_____	16	46	Square to Round with Two Sides Straight
_____	_____	17	50	Offset Rectangular to Round
_____	_____	18	52	Offset Rectangular to Round with One Side Straight
_____	_____	19	56	Rectangular to Round Offsetting Both Ways
_____	_____	20	60	Round Taper
_____	_____	21	62	Round Taper with One Side Straight
_____	_____	22	64	Round Offset Taper
_____	_____	23	66	Square Discharge Stack (Weather Cap)
_____	_____	24	68	Rectangualr Discharge Stack (Weather Cap)
_____	_____	25	70	Roof Jack on a Pitch
_____	_____	26	74	Square to Round Roof Jack on a Corner
_____	_____	27	76	Square to Round at an Angle or Pitch
_____	_____	28	78	Rectangular to Round Boot T Elbow
_____	_____	29	82	Rectangular to Round Boot T Elbow with One Side Straight
_____	_____	30	86	Round Y Branch with Equal Spread

_____	_____	31	90	Round Y Branch Flat on One Side
_____	_____	32	94	Round Y Branch with Different Diameter Branches and Equal Spread
_____	_____	33	98	Y Branch from Square to Round
_____	_____	34	102	Round Three-Way Branch
_____	_____	35	106	Round Tapering Elbow (Reducing Elbow)

OBLONG SECTION

_____	_____	1	112	Oblong to Oblong - Center Flare Both Ways
_____	_____	2	114	Oblong to Round
_____	_____	3	116	Rectangular to Oblong
_____	_____	4	118	Oblong to Oblong with One Side Straight
_____	_____	5	120	Round to Oblong Y Branch
_____	_____	5	126	Double Offset

FABRICATION

- HAND TOOLS
- SHEET METAL MACHINERY
- CUTTING AND NOTCHING SHEET METAL
- PUNCHING AND DRILLING SHEET METAL
- BENDING AND SHAPING SHEET METAL
- FORMING AND ROLLING MACHINES

HAND TOOLS

COMPETENCIES:

1. Select appropriate hand tools for a job.
2. Use hand tools safely.

OBJECTIVES:

1. Demonstrate the proper and safe use of hand tools.
2. Identify, by their proper names, common hand tools.
3. Describe how to use common hand tools.
4. List safety precautions for use with hand tools.
5. Describe the basic purpose of various hand tools.
6. Identify proper procedures for maintaining hand tools.
7. Summarize appropriate storage procedures for hand tools.

LEARNING ACTIVITIES:

1. READ the Hand Tool Safety Information sheet.
   Note: A copy of the sheet is included in this guide and the apprentice guide.

2. READ and STUDY the Hand Tool chart summarizing various hand tools used in the trade.
   Note: A copy of the sheet is included in this guide and the apprentice guide.

3. COMPLETE the Hand Tool Matching assignment sheet.
   Note: A copy of the sheet is included in this guide and the apprentice guide.

4. PARTICIPATE in class lectures and discussion on hand tools.

5. OPTIONAL: VIEW videotapes as assigned by your instructor.
   Note: Several applicable tapes are listed in the Resource section of this guide.

6. IDENTIFY the sheet metal tools used to make an object displayed by your instructor. Compare your list with three other students in the class. Discuss differences and arrive at one list with the tools listed in the order used. Be prepared to share your findings with the class.

7. PARTICIPATE in the lab created by your instructor. You will find various damaged hand tools provided by your teacher or brought in from your workplace. Select the appropriate method to correct the damage and demonstrate it to your

classmates.

EVALUATION/CHECK OUT:

1. Submit your Hand Tool Matching assignment sheet.
2. Demonstrate your knowledge of the objectives in a test situation.

EQUIPMENT:

Samples of various types of hand tools for classroom use.
Samples of various damaged hand tools and instructions to be included in a lab setting.
Examples: Replace a ball peen hammer handle
Reshape a common screwdriver
Reshape a mushroomed chisel or punch

LEARNING MATERIALS:

Copies of a test on Hand Tools. Several sample test questions are included in this guide.

RESOURCES:

1. Audio-Visual Material:

   A. "Hand Tools for Metal Working" a film from BFA, Audiovisual Center, Oklahoma State University, Stillwater, Oklahoma 74074. This film is 25 minutes.

   B. "Hand Operations-Metalwork: Snips and Shears" a film from Moreland-Latchford, Northern Illinois University, Media Distribution Department, Altgeld Hall, Room 114, DeKalb, Illinois 60115. This film is 12 minutes.

   C. "Hand Tools" a video from the Introduction to Machine Technology, Module I Series. Leighton and Kidd Limited Consulting Engineers, 121 Kennedy Avenue, Toronto, Canada M6S 2X8 (416-762-8215)

   The video discuses how to identify and use several tools. Includes the vise, C-clamp, pliers, hammer, screwdriver, wrench, hacksaw, files and punches.

   D. "Sheet-Metal-Hand Tools" a video from Marshall Maintenance Productions, 529 S. Clinton Avenue, Trenton, New Jersey 08611 (1-800-257-0430) This video is 10 minutes.

   This video uses all the hand tools a worker needs-

dividers, awl, rule, snips, hammer, bender and file- to lay out and construct a V-Belt drive guard. Absolutely no math is involved.

2. Publications:
"Fabricators and Manufacturers Association, International," is an industry source of metal forming and fabricating technology available to all Sheet Metal instructors. The FMA publishes the "Fabricator" which is an industry-wide publication. Another publication, "The Sheet Metal Fabricating Technical Council Quarterly" is a collection of technical articles and papers which is sent out to members four times a year. The information included in these packets is designed to help members build their own technical libraries.

The FMA also coordinates 30 to 40 technical education programs covering many aspects of metal forming and fabricating each year. The upcoming conferences always appear in "The Fabricator."

For more information contact Sue Lankner, 5411 East State Street, Rockford, IL 61108-2378. (815-399-8700) The association plans to become a clearing house for various sheet metal information beginning Fall of 1989.

INFORMATION SHEET

HAND TOOL SAFETY

1. Always focus your full attention on the work.
2. Use the appropriate tool for the job you are doing.
3. Demonstrate proper use of the tool.
4. Maintain the tools in their best condition.
5. Store the tools in their appropriate place.
6. Cut away from your body when using sharp-edged tools.
7. Always carry sharp-edged tools with the cutting edge or point down.
8. Never carry sharp or pointed tools in your pockets.
9. When using a file, always include a handle.
10. Do not strike hardened metal or tools with a hard-faced hammer.
11. Avoid mushroomed or battered heads on metal tools by keeping them ground smooth and square.
12. Do not use worn or broken tools.

INFORMATION SHEET

TYPES OF HAND TOOLS AND THEIR USES

TYPE	DESCRIPTION AND USE
TYPES OF PLIERS	
Slip joint	All-purpose pliers.
Vice grip	Pliers with a locking action used to hold material tightly.
Needle nose	Pointed pliers used for holding objects of various sizes.
Channellock	Adjustable pliers used for holding objects of various sizes.
Flat nose	Pliers with flat jaws and small grooves used for forming and holding work.
Round nose	Pliers with flat jaws rounded on outside and are used in holding and forming.
Locking pliers	Pliers adjust easily to lock to any size with desired amount of pressure; release lever opens jaws; can be used as nonlocking pliers.
TYPES OF SCREWDRIVERS	
Common (Standard)	General purpose flat-tipped screwdriver. Used on bolts and screws with straight-slot heads.
Phillips	Used on bolts and screws with cross-slot heads.
Offset	Used on screws in hard-to-get places.

TYPES OF WRENCHES	
Adjustable	General purpose wrench.
Box-end	Enclosed-end wrenches of various sizes.
Open end	Wrenches with open ends which are various sizes.
Combination	Wrenches with one open end and a closed end of equal size.
Allen	Wrenches which fit into a hexagon-shaped recess or hole in a screw.
Socket	Used with ratchet or breakover handles to tighten or loosen recessed bolt heads.

TYPES OF HAMMERS	
Ball peen	General purpose hammer with a curved face and round head.
Mallet	Made of good hickory or rawhide and used where a metal hammer would dent or damage.
Riveting	Has a slightly curved, square face and beveled edges to prevent marking metal as rivets are set.
Setting	Has a square, flat face and flat sides for closing up a Pittsburgh lock.
Sledge	Used when more striking force is required.
Blacksmith	A small sledge-like hammer used in forging and metal shaping.
Nail	Not considered a sheet metal tool but found and used in almost all sheet metal shops.
Body or raising	Used mostly as a finish tool in cornice work and in stainless steel.

TYPES OF PUNCHES

Prick	Used to make small dents or establishing points for trammel points and wing dividers.
Center	Used for marking the location point and the center of holes to be drilled.
Drift	Used to align bolt holes or punch pins or bolts from holes.
Solid	Used to remove larger bolts and shafts from holes.
Pin	Used to remove small split or taper pins from machine parts.
Tinner's hand punch	Used to punch small holes in light gauge metal.
Iron hand	Used on heavier gauge material.

TYPES OF CHISELS

Flat cold	Used to cut off bolt or rivet heads.
Diamond point	Used to cut a V-groove or sharp corners on inside corners.
Round nose	Used to cut rounded grooves.
Cape	Used to cut slots, corners, or keyways.

TYPES OF SNIPS

Left cut	Cuts to the left around curves and 90 degree corners.
Right cut	Cuts to the right around curves and 90 degree corners.

Straight cut	Cuts straight lines or curves; one style has very short blades for special cutting needs.
Bulldog	Heavy duty snips used for all general cuts and thicker metals.
Circular	For cutting inside circles and metal close to an obstacle.
Straight blade	Best for cutting straight lines.
Combination blade	Will cut curves by letting the metal slide over the top blade with ease, and will cut straight.
Double blade	Specifically designed to cut 1/8-inch wide slit in preformed metal duct or sheet metal pipe.
Aviation	Cuts thicker metal and makes small irregular curves and even 90 degree corners.

TYPES OF FILES

Machinist	A double-cut file used to remove metal quickly.
Mill	A single-cut file used for general filing when a smooth finish is required.
Lathe	A long angle single-cut file used for filing on the lathe.
Rasp	A coarse-cut file used for soft metals and plastics.
Jewelers	Various-shaped files which are used by jewelers and tool and die makers.
Curved tooth	A coarse-cut file used for rough cuttings on softer nonferrous metals.

TYPES OF STAKES

Blowhorn	Short tapered horn at one end and a long tapered horn at the other; used in forming, riveting, or seaming tapered objects.
Beakhorn	Thick tapered horn at one end, and rectangularly shaped horn at the other; used for forming riveting and seaming.
Candlemold	Two horns of different tapers; used in forming, riveting, and seaming long, flaring articles.
Needlecase	Small tapered horn at one end, and a small, rectangular horn with a rounded beveled edge at the other; used for very fine hand work.
Creasing	Double, rectangularly shaped horn and contains a number of grooved slots for creasing metal and bending wire; used for forming, riveting, or seaming small, tapering objects.
Hollow mandrel	Slot running through its length in which a bolt slides, permitting the stake to be fastened to the bench at any angle or length; rounded end is used for riveting and seaming ropes, the other end is used for forming laps, riveting, and double seaming.
Solid mandrel	Double shank so that either the rounded or flat side can be used.
Double-seaming	Stake may be used either horizontally or vertically; used for double seaming large work.
Conductor	Two cylindrical horns or different diameters and is used when forming, riveting, and seaming tubes.
Hatchet	Sharp, straight edge, beveled along one side; used for making sharp bends and bending edges.

Teakettle	Four differently shaped heads and is useful in many operations for which other stakes are not adapted.
Bevel-edge	Flat, square head with a bevel edge on the outside of the head for double seaming.
Common Square	Flat square-shaped head with a long shank and is used for general operations.
Coppersmith	Rounded edge on one side and a sharp rectangular edge on the other; used for general operations.
Bottom	Fan-shaped, beveled edge, slightly rounded; used for dressing burred edges on a disk, for special double seaming, and for turning small flanges.
Hand dolly	Flat face, two straight edges, one convex edge, and one concave edge; used for bucking rivets and double seaming.

TYPES OF THREADING TOOLS

Taper taps	Used to start the threading.
Plug taps	Used to cut threads nearly to the bottom of a hole.
Bottoming tap	Used to finish threading to the bottom of a hole.
Pipe tap	A tapered tap used to provide threads of various pipe sizes.
Split dies	Can be adjusted slightly for different thread fits.
Solid dies	Has no adjustments.
Diestock	Used to hold dies when threading.
Tap wrench	Used to hold taps when threading.
Thread restorer	Used to repair damaged thread.

TYPES OF CLAMPING DEVICES	
Machinist vise or bench vise	General purpose vise.
Toolmakers vise	A vise used in toolmaking which may be swiveled in many directions.
Parallel clamp	Used to clamp small parts for layout.
C-clamp	Used in set-up of machines and workpieces.

TYPES OF MEASURING TOOLS	
Steel rules	Used for measuring linear distances; graduated to 1/16-inch; usually 24 inches, 36 inches, or 48 inches long.
Circumference rules	Used to find the circumference of a circle when the diameter is known; also used as a straightedge and for other activities in layout work.
Retractable steel tape rules	Take up little space, are handy to carry and easy to use.
Inside-reading folding rules	Commonly used folding tape measure; usually 6 feet long.

TYPES OF DIVIDERS	
Trammel	Used to construct large circles and arcs.
Wing	Used to construct small circles and arcs and to transfer dimensions.

TYPES OF SQUARES	
Try	Used for accuracy in layout work; blades are available in 6-inch, 8-inch, 10-inch, and 12-inch

	lengths.
Combination	Used for layout accuracy with 45 degree and 90 degree angles.
Framing	Used in layout work for accuracy because all layout must start from a square corner.

TYPES OF PROTRACTORS

Bevel	Used to find or construct angles of different degrees.
Steel swinging-blade	Used to find or construct angles of different degrees; lighter and easy to carry in a tool box.

MISCELLANEOUS HAND TOOLS

Hacksaw	Used to cut various types of metal.
Pop-rivet gun	Rivet-setting tool designed for rivets to be inserted and set from one side in aluminum, steel, and copper; rivets range in size from 1/8 inch to 1/4 inch.
Rivet set	Made with a deep hole used to pull tinner's rivets through metal, and a cup-shaped hole to set the rivets; a hole in the side is for releasing burrs.
Multiple-use dolly	Used to buck the head of a rivet as it is pulled together.
Pipe crimper	Used to reduce the size of the end of a pipe; permits one end of a pipe to fit inside another piece that is the same size.
Hand seamer	Makes bends on light gauge metal which is inconvenient to bend on a brake.
Clip punch	An efficient tool for fastening seams in duct work; an "ear" is cut and bent out to be hammered tight with a hammer.

Dovetailer	Used to cut clips for joining round pipe to a flat or round piece of metal.
Hand notcher	Used for notching ductwork for "S" and drive clips.
Duct stretcher	Used to hook into drive cleats in ductwork to pull the duct together.
Hand groover	Tool that is struck with a hammer to form hammer-lock pipe seams by hand; also used in completing Pittsburgh seams.

ASSIGNMENT SHEET

HAND TOOL MATCHING

---

1. Match types of sheet metal snips to their uses. Write the correct letter in the blank.

_____1. For cutting inside circles and metal close to an obstacle	a. Straight cut
_____2. Cuts to the left around curves and 90 degree corners	b. Bulldog
_____3. Specifically designed to cut 1/8-inch wide slit in preformed metal duct	c. Straight blade
_____4. Cuts straight lines or curves; one style has very short blades for special cutting needs	d. Combination blade
_____5. Best for cutting straight lines	e. Right cut
_____6. Cuts to the right around curves and 90 degree corners	f. Circular
_____7. Heavy duty snips used for all general cuts and thicker metal	g. Left cut
_____8. Will cut curves by letting the metal slide over the top with ease; and will also cut straight	h. Double cut

2. Match types of punches to their uses. Write the correct letter in the blanks.

_____1. Used for marking the location to be drilled; point is ground to approximately 90 degrees	a. Iron hand punch
_____2. Used to punch small holes in light gauge metal; punches and dies range in size from 1/16-inch to 9/32-inch, and are easily changed	b. Center punch
_____3. Used to make small dents or establishing points for trammel points and wing dividers; point	c. Tinner's hand punch
	d. Prick punch

is ground to approximately 30 degrees

_____4. Used on heavier gauge material; punches and dies range from 1/16-inch to 1/2-inch, and are easily changed

3. Match the types of hammers to their uses. Write the correct letter in the blanks.

_____1. Made of good hickory or rawhide and used where a metal hammer would dent or damage material

_____2. Has a square, flat face and flat sides for closing a Pittsburgh lock

_____3. Not considered a sheet metal tool, but is found and used in almost all sheet metal shops

_____4. Has a slightly curved, square face and beveled edges to prevent marking metal as rivets are set

_____5. General purpose hammer with a curved face and round head

_____6. Used mostly as a finish tool, in cornice work, and in stainless steel work

a. Ball-peen hammer

b. Mallet

c. Setting hammer

d. Body or raising hammer

e. Nail hammer

f. Riveting hammer

4. Match types of pliers to their uses. Write the correct letter in the blanks.

_____1. Long nose and handle for deeper reach into work area

_____2. Jaws are positioned and locked into place by engaging tongue in proper groove; a series of channels give wide range of jaw openings; jaws should not slip even under heavy pressure

_____3. Pliers adjust easily to lock at any size with desired

a. Combination pliers

b. Adjustable pliers

c. Locking pliers

d. Long nose pliers

amount of pressure; release lever opens jaws; can also be used as nonlocking pliers

_____4. For holding an object that is difficult to hold in ones hand; should not be used as a wrench for removing nuts

5. Match types of miscellaneous hand tools to their uses. Write the correct letter in the blanks.

_____1. Makes bends on light gauge metal which is inconvenient to bend on a brake

_____2. Used to cut clips for joining round pipe to a flat or round piece of metal

_____3. Used for cutting rivets, bolts, and metal; point is ground to 70 degree

_____4. Used to buck the head of a rivet as it is pulled together

_____5. Used for notching duct work corners for "S" and drive clips

_____6. Used to reduce the size of the end of a pipe; permits one end of pipe to fit inside another piece that is the same size

_____7. Steel plate with various size holes designed to hold the tapered end of stakes firmly so stakes can be used for forming metal

_____8. Designed to fit various size nuts within its capacity; comes in various sizes

_____9. Tool that is struck with a hammer to form hammer-lock pipe seams by hand; also used in completing Pittsburgh seams

a. Stake plate
b. Flat cold chisel
c. Rivet set
d. Hand groover
e. Hand seamer
f. Pipe crimper
g. Stakes
h. Dolly bar
i. File
j. Dovetailer
k. Adjustable wrench
l. Pop-rivet gun
m. Hand notcher
n. Hacksaw

_____10. Shaping tools used with hand tools to complete numerous operations as tube forming, taper forming, seaming, riveting

_____11. Made with a deep hole used to pull tinner's rivets through metal; and a cup shaped hole to set the rivets

_____12. Rivet-setting tool designed for rivets to be inserted and set from one side in aluminum, steel, and copper

_____13. Used to remove burrs, to square the end of band iron, and to straighten uneven edges

ANSWERS FOR MATCHING ASSIGNMENT SHEET

1.
1. f
2. g
3. h
4. a
5. c
6. e
7. b
8. d

2.
1. b
2. a
3. d
4. c

3.
1. b
2. c
3. e
4. f
5. a
6. d

4.
1. e
2. j
3. b
4. h
5. m
6. f
7. a
8. k
9. d
10. n
11. g
12. c
13. l
14. i

202

SAMPLE TEST QUESTIONS

HAND TOOLS

Note: Use the following as a model to create a test on hand tools.

Your instructor has tagged and numbered 20 hand tools that are frequently used in sheet metal work. Look the tools over and write the name of each tool in the proper blank provided below.

1. _____
2. _____
3. _____
4. _____
5. _____
6. _____
7. _____
8. _____
9. _____
10. _____
11. _____
12. _____
13. _____
14. _____
15. _____
16. _____
17. _____
18. _____
19. _____
20. _____

Multiple Choice:

1. Which of the following are used primarily to cut sheet metal pipe?
   a. circular snips
   b. double cutting snips
   c. aviation snips
   d. all of the above

2. Which of the following are true in relation to the use of squaring shears?
   a. they are used for trimming thin gauge sheet metal
   b. they can be used for cutting notches in heavier sheet metal
   c. they can be used for irregular cutting to a line
   d. all of the above

3. Which of the following hand forming tools should be used for forming small pipe and tubing?
   a. blowhorn stakes
   b. candlemold stakes
   c. beakhorn stakes
   d. needlecase stakes

4. The hollow Mandrel stake is used for _____:
   a. forming laps
   b. seaming and riveting pipes
   c. forming laps
   d. all of the above

5. The creasing stake is used for _____:
   a. creasing metal
   b. bending wire
   c. forming, riveting and seaming small objects
   d. all of the above

6. Which of the following hand forming tools have a short tapered horn at one end and a long tapered horn at the other?
   a. hatchet stakes
   b. hand dolly stakes
   c. blowhorn stakes
   d. solid mandrel stakes

7. Which of the following is commonly used for flattening rivets on piped ducts?
   a. setting hammer
   b. sledge hammer
   c. ball peen hammer
   d. riveting hammer

8. Which of the following is commonly used for removing small split or taper pins from machine parts?
   a. prick punches
   b. pin punches
   c. drift punches
   d. iron hand punches

9. Cold chisels are used for _____:
   a. cutting metal
   b. breading rivets
   c. splitting nuts
   d. all of the above

10. Which hand tool is used on bolts and screws with cross-slot heads?
   a. standard screwdriver
   b. phillips screwdriver
   c. offset screwdriver
   d. all of the above

11. Which of the following are commonly used on light gauge aluminum and lead?
   a. double-cut files
   b. curved tooth files
   c. rasp-cut files
   d. all of the above

12. Which of the following are used to cut thicker metal and to make small irregular curves and even inside 90 degree corners?
   a. general purpose snips
   b. circular snips
   c. aviation snips
   d. all of the above

13. Which of the following hand tool is designed to fit various size nuts within its capacity?
   a. adjustable wrench
   b. open end wrench
   c. combination wrench
   d. box-end wrench

True or False

1. Always tell your instructor about faulty or broken tools.

2. Use tools without handles very carefully.

3. Make sure tools are in good condition and properly sharpened.

4. Push on wrenches that don't fit properly and pull on those that do fit properly.

5. Select any tool that looks like it would work for the job.

6. Keep tools clean and dry.

7. Strike hardened chisels with hard-faced hammers only.

8. Learn how to use tools properly.

9. Keep sharp-edged tools near the edge of the table so they can be easily seen.

10. Saw lightly when nearing the completion of a cut with a hacksaw.

ANSWERS TO SAMPLE TEST QUESTIONS

Multiple choice:

1. b
2. a
3. d
4. d
5. d
6. c
7. a
8. b
9. d
10. b
11. c
12. c
13. a

True or false:

1. true
2. false
3. true
4. false
5. false
6. true
7. false
8. true
9. false
10. true

SHEET METAL MACHINERY

COMPETENCY:

Select and use sheet metal machinery safely.

OBJECTIVES:

1. Identify common sheet metal working machines by their proper names.
2. Describe the basic purpose of various sheet metal working machines.
3. List general safety precautions for working with machines.
4. Explain the difference between a cornice break, a bar folder and a press brake.
5. Describe how to maintain and care for various pieces of machinery.
6. Demonstrate the proper and safe use of machines.
7. Explain the use of the computer in sheet metal work.
8. Identify how laser technology benefits the fabrication process.

LEARNING ACTIVITIES:

1. READ and STUDY the Machine Tool information sheet.
   Note: A copy of the sheet is included in this guide and the apprentice guide.

2. READ "The Role of the Computer in the Sheet Metal Trade" from Practical Sheet Metal Layout: Specialty Items Used Today, pages 575-623.

3. DISCUSS safety requirements for the operation of all machines. READ the Machine Tools Safety information sheet.
   Note: A copy of the sheet is included in this guide and the apprentice guide.

4. OPTIONAL: VIEW the videotapes on Sheet Metal Machinery as assigned by your instructor.
   Note: Several appropriate videotapes are listed in the Resource section.

5. WATCH your instructor show and demonstrate the use of various machines.
   Note: Show and demonstrate as many of the machines as you have available to you.

6. PARTICIPATE in a class discussion on Machine Tools.
   Note: For the discussion give an application for a

machine or power tool and ask students to select the most suitable machine or tool. For example you might ask students which machine would be used to make cornices or gutters. Students could then confer in pairs and report back to the large group.

7. COMPLETE the Machine Tools assignment sheet.
   Note: A copy of the sheet is included in this guide and the apprentice guide.

8. COMPLETE the Machine Tools in Your Work Place assignment sheet.
   Note: A copy is included in this guide.

9. READ the article "Program Presses and Press Brake."
   Note: A copy of this article is included in this guide and the apprentice guide.

10. READ the article "Lasers Find a Niche in Manufacturing."
    Note: A copy of this article is included in this guide and the apprentice guide.

EVALUATION/CHECK OUT:

1. Submit your Machine Tools assignment sheet.
2. Submit your Machine Tools In Your Workplace assignment sheet.
3. Demonstrate your knowledge of the objectives in a test situation.
   Note: Several sample test questions are included in this guide if you wish to give a written test. An oral test can also be used for this unit. Show the student a machine and ask him/her to identify the name of the machine, state its application and describe its maintenance and safe use.

LEARNING MATERIALS:

1. Text: Practical Sheet Metal Layout: Specialty Items Used Today by Richard Budzik.
2. A copy of a test on Machine Tools. Several sample test questions are included in this guide.

EQUIPMENT AND SUPPLIES:

Examples of various types of machines

RESOURCES:

1. Audio-Visual Materials:
   A. "Machine Operations - Sheet Metal" film. Available

from Northern Illinois University, Media Distribution Center, Altgeld Hall, Room 114, DeKalb, IL, 60115.

The videotape demonstrates the use of the adjustable bar folder, standard hand brake, box and pan brake and slip roll former.

B. "Power and Hand Tools Safety" from Tel-A-Train, P.O. Box 4752, 309 North Market Street, Chattanooga, TN, 37405. 1-800-251-6018.

This videotape demonstrates proper methods of selection, inspection, and use of hand and power tools. The importance of exercising judgment and control before, during and after the job is emphasized.

The dangers of commonly misused hand tools and electrical, pneumatic and gasoline powered tools are presented. By the program's conclusion, viewers will be aware of what the potential dangers are when using these tools, and the steps to take to limit the risk of injury.

INFORMATION SHEET

MACHINE TOOL SAFETY

When using machine tools, keep in mind the following safety rules:

1. Read all of the manufacturer's safety recommendations thoroughly.

2. Inspect and serve power tools regularly by qualified maintenance personnel.

3. Familiarize yourself with the operations procedures of each tool or machine.

4. Inspect electrical cords regularly to make sure they are in good condition. Do not leave cords in places where they may be run over or damaged. Be sure all power tools are grounded with three-pronged conductor cords.

5. Put safety guards in place before starting.

6. Remove rings, watches, and other jewelry before using power tools.

7. Be sure your hands are dry.

8. Make all adjustments and inspections before you turn on the power.

9. Wear all required safety equipment (for example goggles or a dust mask).

10. Be sure the materials being worked are securely clamped in the machines and will clear all machine parts when moving.

11. When work is completed: shut off tool; disconnect from power source; remove blades, bits or other cutter from the tool; and store properly.

INFORMATION SHEET

MACHINE TOOLS

GENERAL INFORMATION

1. Bench tools: Small, hand operated tools generally anchored to a bench and used for one or more operations on cylindrical projects.

2. Portable power tools: Small, electrically or air-operated tools that can be comfortably moved from job to job.

3. Manual and power-operated floor tools: Medium to large tools that are usually secured in a permanent position for forming and working with sheet metal.

4. Brakes: Machines for making straight line bends to specified angles for rectangular components.

5. Rolls: Machines for making cylindrical components.

TYPE OF TOOL/MACHINE	PURPOSE
BENCH TOOLS	
Adjustable bar folder	For folding, bending, hemming, setting down, and making drive clips.
Double seam machine	For double seaming flat bottoms on straight or flared cylindrical articles
Burring machine	For turning edges on circular discs such as bucket bottoms and for turning edges for double seaming cylindrically shaped projects.

Beading machine	For various beading operations with single and ogee rolls.
Turning machine	For making rounded edges for wiring operations on cylinders, and for double seaming.
Grooving machine	A specialized machine for grooving longitudinal seams in cylinders by grooving and flattening in one operation of the carriage.
Crimping and beading machine	For crimping and beading the end of a cylinder.
Setting down machine	For setting down seams on containers of various shapes.
Elbow edging machine	For turning the edges of elbow gores so the gores can be assembled as a complete elbow with tight or adjustable joints.
Combination rotary machine	Has numerous interchangeable rolls to facilitate several different operations simply by changing to the desired set of rolls.
Easy edger	Turns perfect flanges on curved metal edges.
Multi-purpose bench lever shear	Throatless shear which will cut straight or curved lines without distortion in heavy to light metals.

Cleat bender	A tool used to turn drives on preassembled duct.
Bench vise	For clamping stock to be worked on; the swivel base is the most common type.
PORTABLE POWER TOOLS	
Reciprocating saw	A portable electric key hole saw with various types and sizes of blades for cutting wood, metal, plastics, and heavier steel.
Circular saw	A general purpose saw used for cutting wood, metal, and plastics.
Angle grinder	Generally used with attachments for cleaning joints after a welding process.
Hand drill	Generally used for light drilling jobs; comes in various types such as variable speed, reversible, 1/4", 3/8" and 1/2" capacities.
Heavy duty hand drill	Generally used for drilling heavy or thick materials.
Hammer drill	Heavy duty drill with percussion bit for drilling masonry, brick and tile.
Unishear	A hand held metal cutting shear for heavy metals.

Nibbler	Separates metal by punching 1/8" pieces out of the metal with a rapid punching action to speed up pattern cutting with light to heavy gauge metals.
Power double cuts	For cutting a cylinder into two or more pieces with minimum waste and time.
MANUAL AND POWER OPERATED FLOOR TOOLS	
Hand brake	A machine used for bending or forming flat metal into various shapes.
Box and pan brake	Has removeable sections called fingers to allow extra working clearance, and used for bending the fourth side of a box without distorting the other three sides.
Press brake	Has special dies that it presses metal into; it is more of a production tool
Squaring shear	Has a manually operated foot peddle for straight line cuts. Available in various lengths.
Power Shear	Similar to square shear except it is motor operated and run by hydraulic or mechanical arrangement.
Slip roll	Indispensable for making pipe and small round projects.

Power roll	For production of cylindrical objects from heavier materials.
Power hack saw	Used to speed up production of cutting light steel pipe and angles.
Cut-off saw	Used to cut heavier steel at different angles or in straight cuts.
Band saw	Has a continuous cutting blade for cutting mild steel.
Angle iron shear, notcher and bender	Used to cut, notch and bend angle iron, and is a must when angle iron is being worked with.
Drill Press	Used for drilling holes in several pieces of light metal at one time or drilling single holes in heavier metals.
Bench or floor grinder	Used for grinding, sharpening, or cleaning up welded materials.
Resistance Spot Welder	A special machine for sheet metal attachment because it bonds two pieces of metal together without the use of any added materials.
Rotary circle shear	Used for cutting sheet metal discs for bottoms and tops of cans and can also be used for slitting sheets of metal.

Standard Pittsburgh machine	Used to make Pittsburgh locks that have to be closed by hand with a setting hammer or electric or air Pittsburgh hammer.

ASSIGNMENT SHEET

MACHINE TOOLS

In the classroom your instructor has numbered several machine tools or pictures of machine tools. Identify each of the machine tools and describe its purpose below.

MACHINE NAME	PURPOSE
1.	
2.	
3.	
4.	
5.	
6.	
7.	
8.	
9.	
10.	

ASSIGNMENT SHEET

MACHINES TOOLS IN YOUR WORKPLACE

Identify six types of machines in your workplace. List them below Indicate what the machine is used for and any special safety precautions.

1. Machine: _____

Purpose: _____

Safety Precautions: _____

2. Machine: _____

Purpose: _____

Safety Precautions: _____

3. Machine: _____

Purpose: _____

Safety Precautions: _____

4. Machine: _____

Purpose: _____

Safety Precautions: _____

5. Machine: _____

Purpose: _____

Safety Precautions: _____

6. Machine: _____

Purpose: _____

Safety Precautions: _____

239

SAMPLE TEST QUESTIONS

SHEET METAL MACHINERY

NOTE: Use the following questions as a guide to preparing a test on Machine Tools.

1. Which of the following is true in relation to the use of squaring shears?
   a. They are used for trimming thin gage sheet metal.
   b. They are used for irregular cutting to a line.
   c. They can be used for cutting notches in heavier sheet metal.
   d. All of the above.

2. Which of the following is used for cutting irregular shapes of heavier gage metal?
   a. Bench shears
   b. Lever shears
   c. Notchers
   d. Nibblers

3. Which of the following are commonly used for forming cylindrical shapes?
   a. slip forming rolls
   b. box and pan brakes
   c. cornice brakes
   d. all of the above

4. The bar folder is usually employed for bending edges of:
   a. 16-gage metal only
   b. 20-gage metal or lighter
   c. 22-gage metal or heavier
   d. 28-gage metal

5. Which of the following operations is frequently performed on the press brake?
   a. Bending
   b. Crimping
   c. Burring
   d. Rolling

6. Which of the following machines is usually used for making rounded edges for the insertion of wire?
   a. Slip forming rolls
   b. Press brakes
   c. Turning machines
   d. Setting down machines

7. Which of the following machines is designed to facilitate the construction and connection of sheet metal pipes?
   a. Double seaming machine
   b. Setting down machine
   c. Crimping and bending machine
   d. Turning machine

8. What machine is used for crimping and beading the edge of a cylinder?
   a. Adjustable bar folder
   b. Easy edger
   c. Cleat bender
   d. Crimping and beading machine

9. What machine is used for bending or forming flat metal into various shapes?
   a. Hand brake
   b. Press brake
   c. Slip roll
   d. Power shear

10. What machine is indispensable for making pipe and small round objects?
   a. Square shear
   b. Slip roll
   c. Press brake
   d. Power shear

11. Which of the following should not be bent using a standard hand brake?
   a. wire
   b. rod
   c. band iron
   d. all of the above

12. Squaring shears can be used to cut:
   a. tin plate
   b. galvanized iron
   c. black iron
   d. all of the above

13. An ogee bead:
   a. Is used for a different purpose than a single bead
   b. Is formed on the outside of a job
   c. Is formed on the outside and inside of a job
   d. Is the bead most frequently used

TRUE OR FALSE

1. Slip roll forming machines should be lubricated periodically.

2. Sheet metal can only be cut properly by machine.

3. If the pieces are small, squaring shears can be used to cut materials exceeding the capacity of the machine.

4. Two people are needed to operate the squaring shear safely.

5. Beads are formed by gradually rolling an impression in the job.

ANSWERS TO SAMPLE TEST QUESTIONS

Multiple Choice:

1. A
2. D
3. A
4. B
5. A
6. C
7. C
8. D
9. A
10. B
11. D
12. D
13. C

True or false:

1. T
2. F
3. F
4. F
5. T

Program presses and press brakes

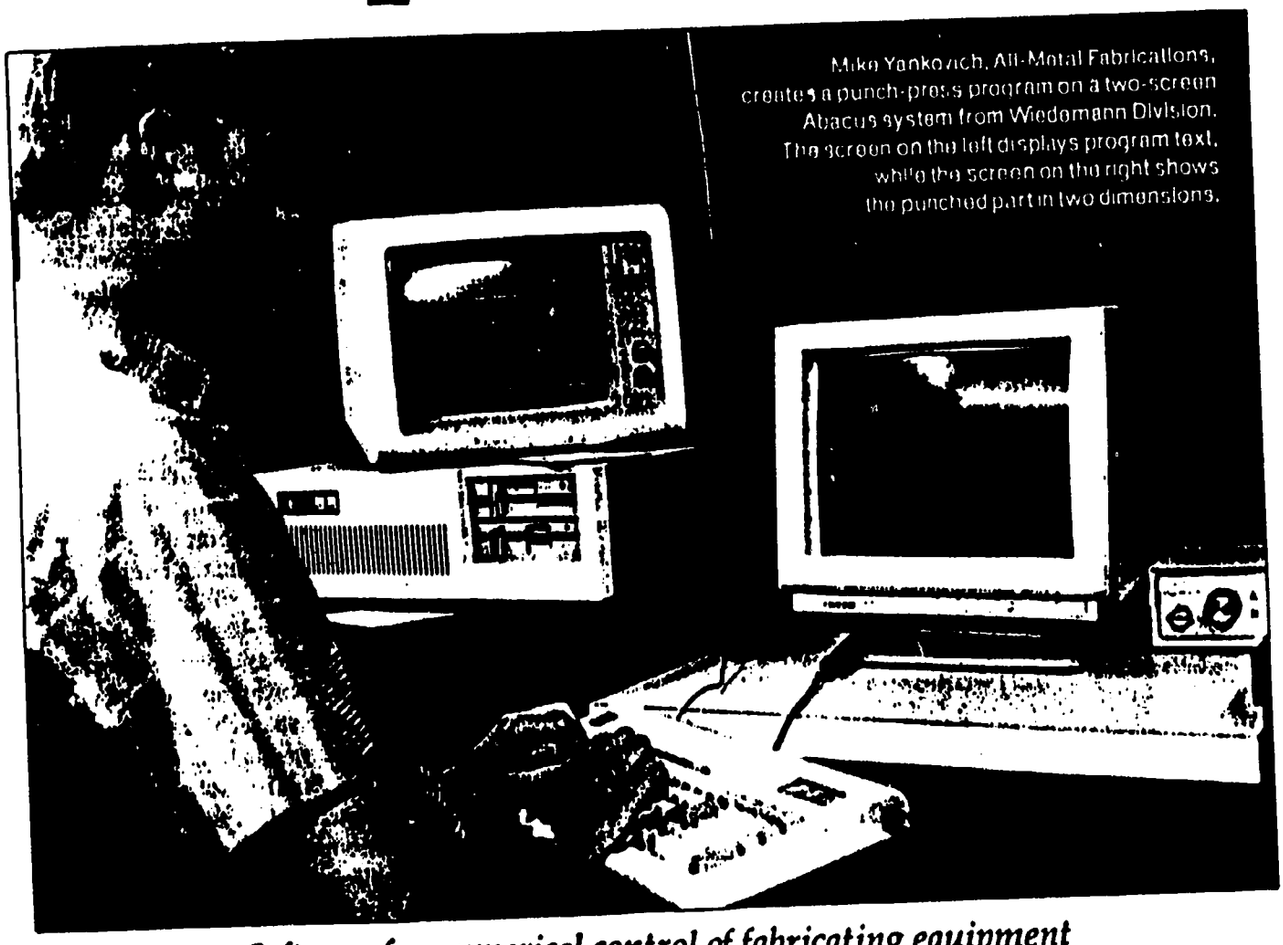

Mike Yankovich, All-Metal Fabrications, creates a punch-press program on a two-screen Abacus system from Wiedemann Division. The screen on the left displays program text, while the screen on the right shows the punched part in two dimensions.

Software for numerical control of fabricating equipment uses English-language programming commands and 3-d graphics to minimize programming time and reduce errors.

By Brad F. Kuvin, assistant editor

Fabricators realize that to compete in a worldwide marketplace, they must increase productivity and decrease operating costs. Computer-numerical-controlled fabricating equipment has long promised these benefits, but many companies have been reluctant to purchase complex machines, fearing that programming the controllers would cost too much in operator training, and that long learning periods would disrupt schedules.

To ease the plunge into cnc, producers of cnc equipment and companies that specialize in computer control have simplified programming. They have enhanced software with graphics capabilities and English-language commands, and have made controllers that do much with little programming by operators.

Upgrade punch presses

Punch-press manufacturers offer programming hardware and software as options with new equipment or as retrofits for existing cnc equipment. The software uses English-language prompts and understandable menu formats displayed on a crt screen to lead programmers through program development, from blank to finished part. Graphics, some with full color and in 3-d,

show what completed parts will look like before fabricating, letting the operator make corrections to reduce scrap and to minimize reprogramming.

A few companies offer programming packages only, for use with punch presses from most vendors. All sell postprocessors that translate programs into the appropriate machine-operating language to create nc tapes that run punch presses from U.S. Amada, Behrens, Strippit, Trumpf, Wiedemann, and others.

Manufacturers of presses and brakes and companies that specialize in cnc sell software with graphics capabilities that program with English commands.

The programs include features like these:

- Hole definition—round, square, or rectangular.
- Variable part scale and orientation.
- Automatic tool selection and assignment to appropriate turret station, for turret punch presses, to minimize turret rotation.
- Tool-path generation, including nibbling.
- Graphical display of clamp location, including safety-zone checking to assure that clamps are distant from tool hits so parts don't warp.
- Tool-path optimization, to minimize punching time.
- Calculation of percentage of sheet used.
- Estimated punching time.

Software sellers

Techware Computing Co., St. Petersburg, Fla., offers Cam-Tech II software, which runs on Dec personal computers, and an optional board to run the program on IBM pc's. Paired with Cad-Tech computer-aided-design software, the package programs turret-punch presses—a tape punch prepares nc tapes, or a direct-numerical-control terminal downloads programs directly into a press controller.

Geopoint IV software from Anderson O'Brien, St. Paul, Minn., takes drawings generated by Cadkey design software and unfolds it into a flat piece, calculating blank size. The software runs on IBM or compatible hardware.

Fab-Ware software, which runs on Hewlett-Packard 9000-series computers, comes from S.B. Whistler & Sons, Buffalo. Merry Mechanization, Wyoming, Minn., offers SMP-81 software that runs on computers from Apollo, Data General, Dec, H-P and Prime Computer. Combining Punch-Ware and Bend-Line programs from RME Systems, Rancho Cucamonga, Calif., allows programming of 3-d parts and production of nc tapes. The software runs on Dec minicomputers. Multi-Punch, from Accugraph Corp., Don Mills, Ontario Canada, runs on the IBM PC-AT.

Some punch-press manufacturers have developed programming systems that allow an operator or engineer to set up a machine and to work up part programs in an office, away from the manufacturing floor. These include Amacom hard- and software to program punch presses from U.S. Amada; TC-APT from Trumpf America, which programs laser-, flame-, and plasma-cutting equipment and Trumpf punch presses; Strippit/Di-Acro also sells software called MultiPunch, that runs on Apple computers; and Wiedemann Division sells Abacus systems.

For job shops

Who uses remote graphics-based computer-programming stations to program punch presses? Tom Karlinski, product specialist for Strippit/Di-Acro, says job shops that purchase cnc machines look to ease the transition from manual to cnc fabrication, and will frequently add a computer-based programming setup to an equipment order. Among the reasons fabricators have grown more eager to acquire pro-

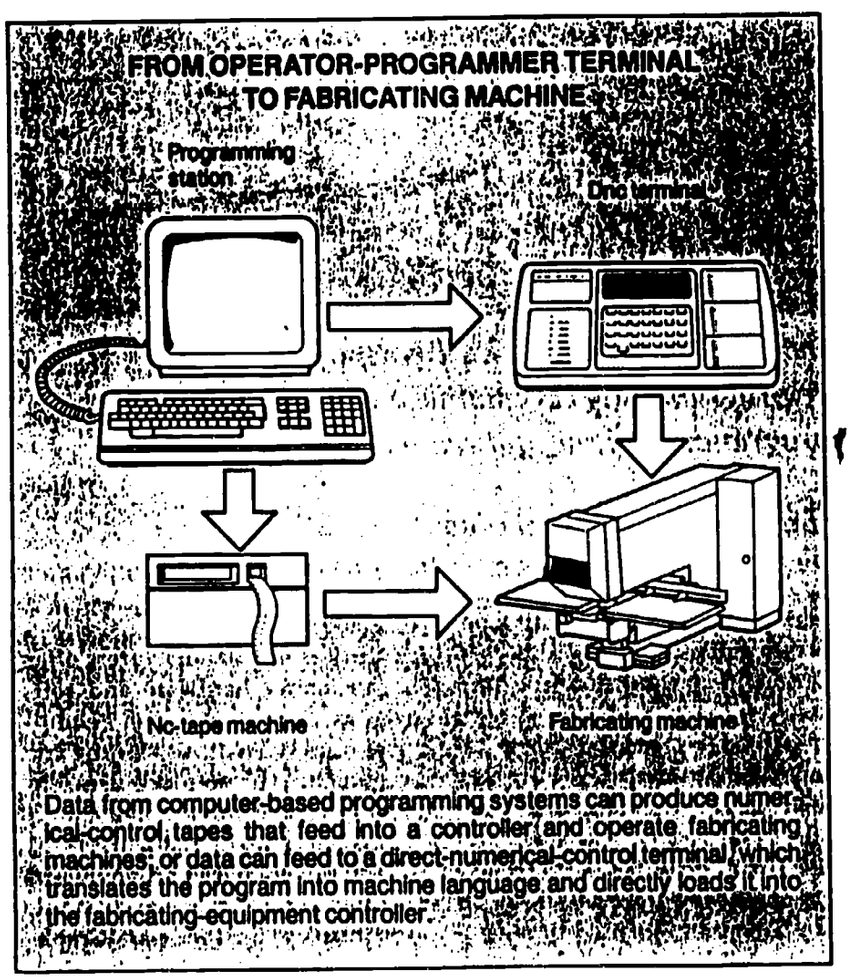

Data from computer-based programming systems can produce numerical-control tapes that feed into a controller and operate fabricating machines; or data can feed to a direct-numerical-control terminal which translates the program into machine language and directly loads it into the fabricating-equipment controller.

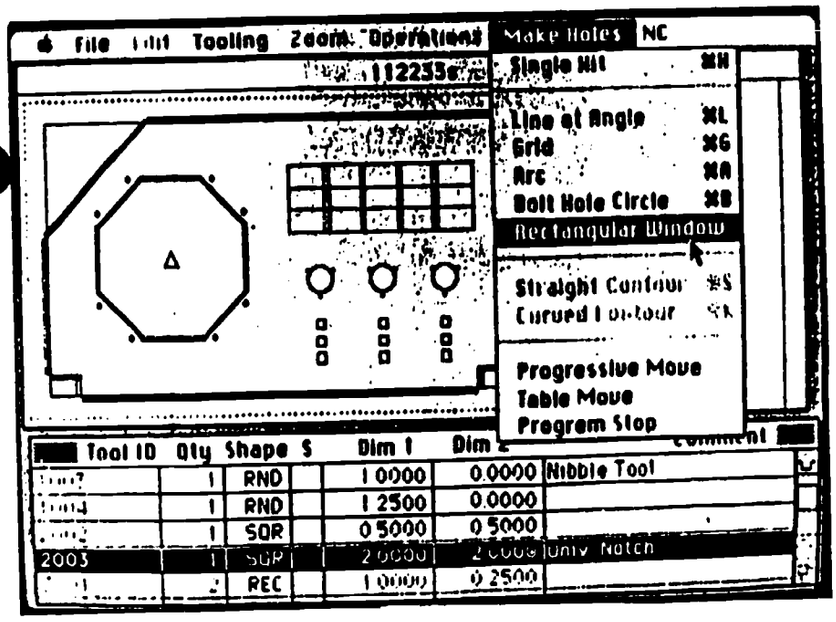

MultiPunch software from Strippit displays prompts from a "make holes" menu to gather information to create a part program for a punch press. An operator selects tools, listed and described in a table at the bottom of the screen, and the software generates a part drawing, updating the drawing after the operator selects each tool hit.

gramming software, Karlinski puts use of English-language commands at the top. The typical learning period for computer programming, he says, has shrunk from a month to one week.

A Cleveland job shop proves Karlinski's point. All-Metal Fabrications, a manufacturer of sheet-metal products like computer chassis, electrical boxes, and cabinets, purchased an Abacus 2000 programming system last August and was producing nc tapes for turret punch presses in two days. Abacus equipment—two crt's, keyboard, printer, and nc-tape punch—sit in production manager Mike Yankovich's office. Yankovich produces nc tapes on the Abacus for a Wiedemann Centrum 2000 turret punch press and for a Strippit/Di-Acro VT-36 turret punch press.

All-Metal sends simple small parts up to 36 inches square to a manually programmed W.A. Whitney Duplicator punch press. Other jobs go to the two computer-programmed presses. Yankovich estimates that on a difficult part produced in multiples, Abacus cuts programming time from four hours to one-half hour.

Creating a program

To begin programming a part, Yankovich gives the program a name, then selects the press to produce the part. He inputs blank size, tells which tools he needs, and gives hole sizes and coordinates of tool-hit points. As he enters each hit, the graphics screen updates a display of the part. The Centrum 2000 turret has 22 stations—All-Metal typically uses five to eight tools for a job.

With a part defined, Yankovich commands Abacus to generate a punching sequence. If he wants multiple parts nested on a sheet, he calls up a tape-prep menu. Using a sheet-utilization subroutine chosen from the menu, he inputs sheet size and informs Abacus how he wants parts separated from the sheet. Typically, a nibbler separates parts along the *x*, *y*, or both axes.

Parts can be separated from the sheet one of two ways: the nibbler can completely cut out parts so they fall out of the sheet onto a conveyor underneath the press, called dropout; or the nibbler can leave small tabs between parts so the operator only has to shake the sheet to separate parts, called shakeout.

Finally, Yankovich either inputs clamp position manually or has Abacus calculate clamp positions—the Centrum uses two clamps. Abacus calculates a safety zone for each clamp, shown as dashed lines on the sheet layout on the crt screen. There, Yankovich checks positions of tool hits to assure that none fall in the safety zones. If clamp positions are safe, Abacus returns with the number of parts that will fit on the sheet and the percent of material utilization. He can zoom in on any area of the sheet drawing and rotate the drawing, checking for clearance, looking at tabs left for shakeout, or checking other details.

Process optimization

Satisfied with the sheet nest, Yankovich then calls up a routine in the software that calculates the most efficient order of tool use and the order of hits for each tool. He is cautious here with multiple parts requiring shakeout or dropout—if he uses the optimization routine, the program might place the nibbling operation into the sequence before all of the holes are punched, leaving too little sheet to support the parts during punching, or dropping out incomplete parts.

Job shops that purchase cnc machines add a computer programming setup to ease the transition from manual to computer-controlled fabrication.

For multiple parts, Yankovich sets tool order manually, specifying punching of holes from smallest to largest, and assigning nibbling last. He then lets the software figure order of hits for each tool. He lets the computer figure tool order only for large, single pieces. With the process optimized, Abacus displays cycle time to punch the parts.

A printer generates a setup sheet for the press operator that tells him blank size, tool placements, and clamp locations, and the tape punch produces an nc tape. If the press operator, while setting up the machine, notices a required tool already in the turret but in a different

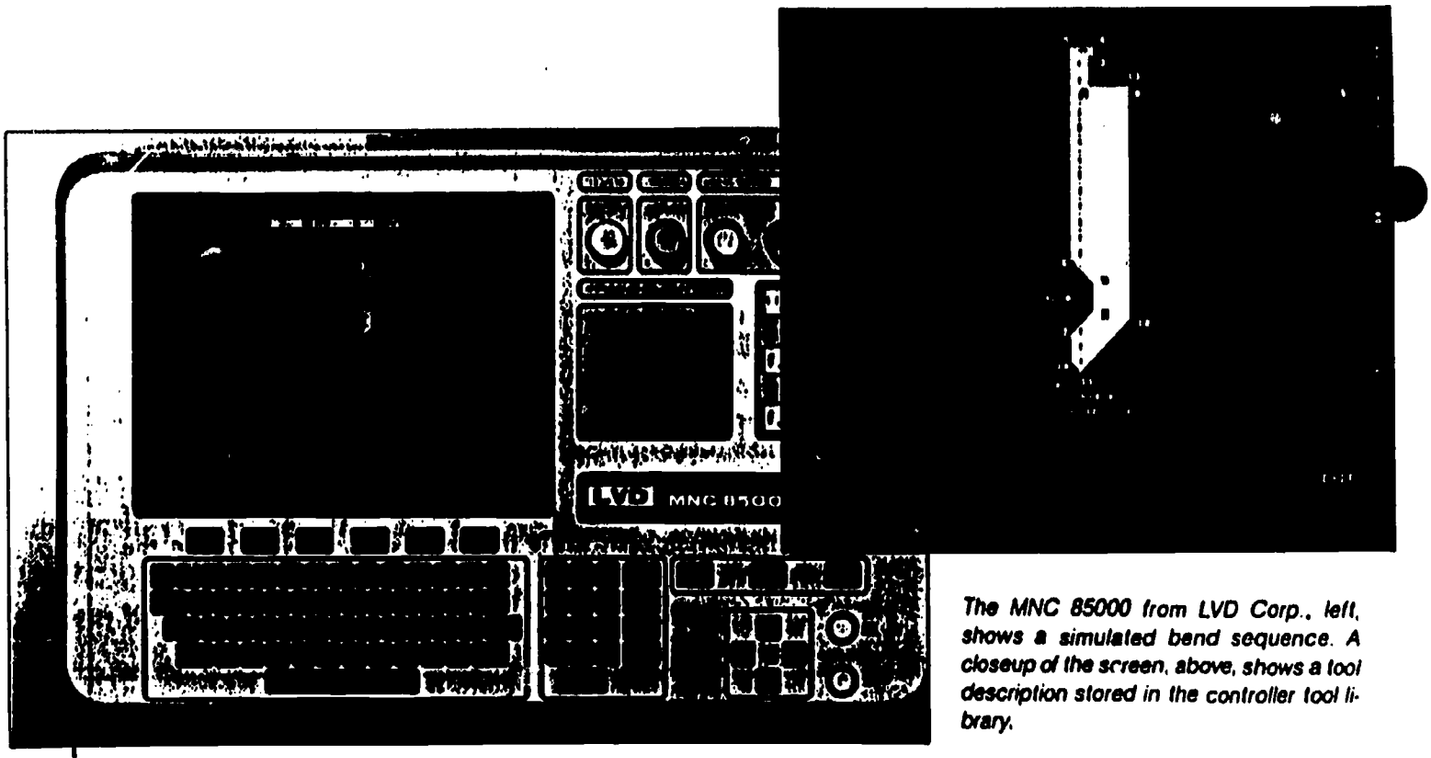

The MNC 85000 from LVD Corp., left, shows a simulated bend sequence. A closeup of the screen, above, shows a tool description stored in the controller tool library.

turret position than called for in the program, he can edit the program on the machine controller so he need not move the tool.

Simulate bending

Computer controllers for press brakes allow the user to simulate bending sequences on a crt screen before running the program on the machine. Users input data describing the material to be formed—tensile strength and thickness—and a description of the bends to be made—flange lengths and angles. The controller calculates blank size, performing all mathematical calculations to account for bend allowances, gives positions of back gages and work supports, and directs part indexing and turning.

Computer controllers for press brakes graphically simulate bending sequences on a crt before running the program on the machine, reducing errors.

Software routines optimize bend sequences to minimize part turning. The controller also watches for out-of-tolerance conditions—the user can input machine capabilities, and, if a bend requires more tonnage than the brake can deliver, the controller displays error statements on a crt screen.

According to Bill Whitbeck, technical engineer at Pullmax, large fabricators and small job shops benefit from advanced press-brake controllers. Pullmax sells Cybelec controllers with its press brakes. He says large fabricators use the controllers to tie brake operations into overall computer operations, like map, cad-cam, and mrp, while small job shops enjoy the quickness and ease at which new part programs are created.

A popular Cybelec controller, also sold by Wysong & Miles for use on its press brakes, is the DNC 7000. This unit includes scheduling software. Operators can input times when jobs should run and how many pieces to bend for each job, then assign machine operators. The controller generates a production schedule, searching a list of jobs and organizing them by similar material type and thickness, operator, and needed tooling to minimize tool changes and save time.

From LVD

. . .comes the MNC 85000 controller. Using the controller, an operator enters geometric data describing a part and inputs press-brake specs—capacity, speed, stroke, bending length, and the like. The controller calculates blank size then generates the optimum bending sequence based on user-defined criteria to minimize handling and simplify gaging. It then shows a graphical simulation of the sequence bend by bend on a 14-inch crt screen. The operator can view any interferences with tooling or the brake and can manually edit the program.

Satisfied with the bend sequence, he instructs the controller to run the program and produce parts. The MNC 85000 sets up all of the brake cnc axes and controls depth settings, ram parallelism, bed crowning, die indexing, tool changes, and positions of back gages and work supports. During brake operation, the controller tracks bending, displaying on the screen what the part should look like after the next bend. It shows the operator how to reposition the workpiece for the next bend and what tooling to use.

To produce brake programs off line, away from the fabricating floor, LVD sells Cadman-B software to run on Hewlett-Packard computers. The software includes the same capabilities as the MNC 85000. It generates programs that can be stored on floppy disks or downloaded to a press brake. Cadman comes with LVD tooling stored in a library; users can add their own tools to the library.

Reprinted with permission from Welding Design and Fabrication, September 1987 issue.

Lasers Find a Niche in Manufacturing

Through their increasingly widespread use, lasers have become an important part of industrial material processing.

JAMES P. RUTT
Coherent General Inc.
Sturbridge, MA

Industrial lasers are becoming the tool of choice in many industries. The reason is economics. High-energy laser beams can cut, weld, drill, heat treat, or mark materials more cost effectively than conventional tools.

Companies where laser-based material processing systems are installed claim improved efficiency in part production by a factor of 8 to 20. Payback periods are said to range from less than one year up to a maximum of five years, depending on the application.

Lasers are easily integrated into automated manufacturing environments. When coupled with CAD/CAM systems, lasers can provide prototype and production parts quickly, while lowering costs.

Cutting costs

Lasers can provide substantial cost savings. One company that performs laser-based metal cutting has determined that laser cutting technology reduced its shop costs by $1.1 million a year. This is accomplished two ways. First, a computer uses interactive graphics techniques to "nest" or lay out parts in a pattern for most effective use of material. The result is a 25 to 30% reduction of metal scrap, for a savings of $450,000 annually.

Second, because the patterns are then cut with the laser beam, there is no need for blanking patterns and dies used in conventional cutting. The elimination of dies yields a yearly savings of $650,000.

Post-processing costs are also reduced. The focused laser beam cuts metals at speeds up to 300 ipm, and produces a cut 0.005 to 0.012 in. wide with a minimum heat-affected zone (HAZ). This minimizes thermal distortion of material, creates sharper definition, and reduces machining costs to deburr cut edges. A CNC interface converts a laser-based material processing system into a multifunctional machine cell capable of single and multiple-spot welding, cutting, and drilling the same workpiece in one program cycle.

Return on investment is further accelerated by diverting the laser beam in a programmed sequence to workstations having different optics and material processing machinery. Instead of using the entire power output from the laser source in one beam, it can be divided into as many as four beams, with each directed on the workpiece at different places to increase throughput. Another variation is to optically split the output beam (either 50-50 or 70-30), directing each to indi-

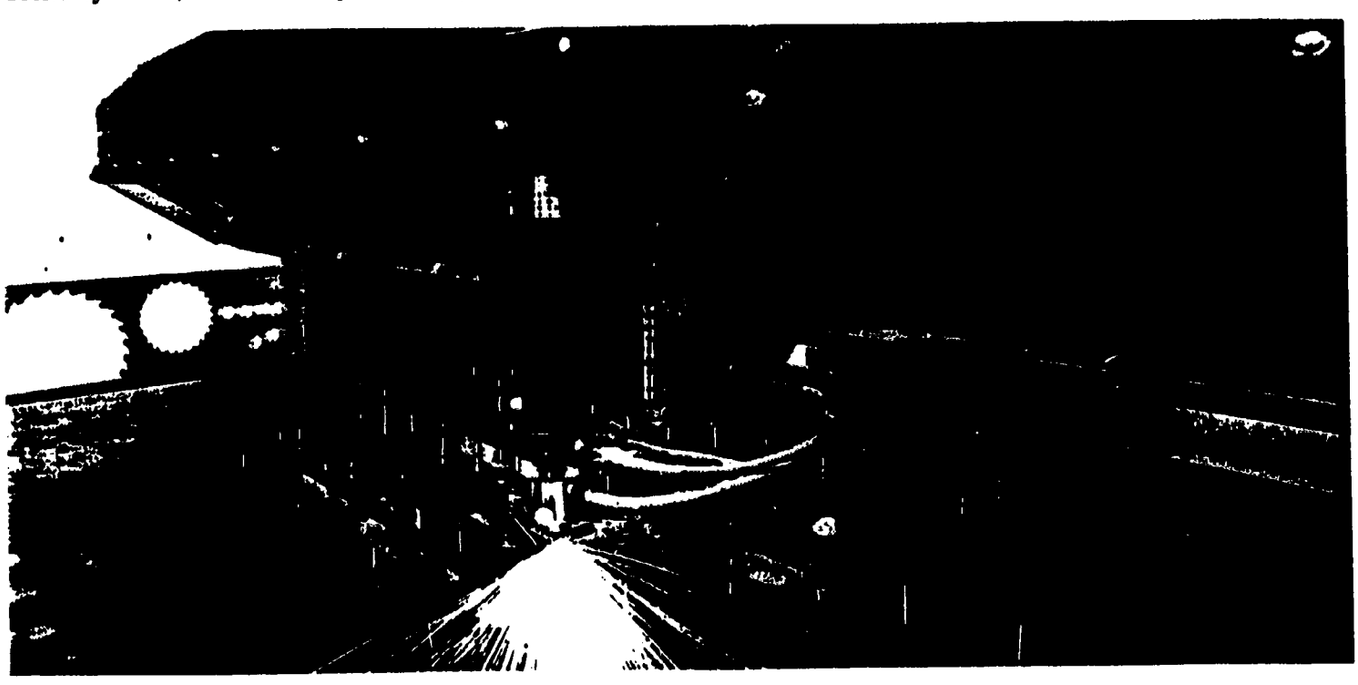

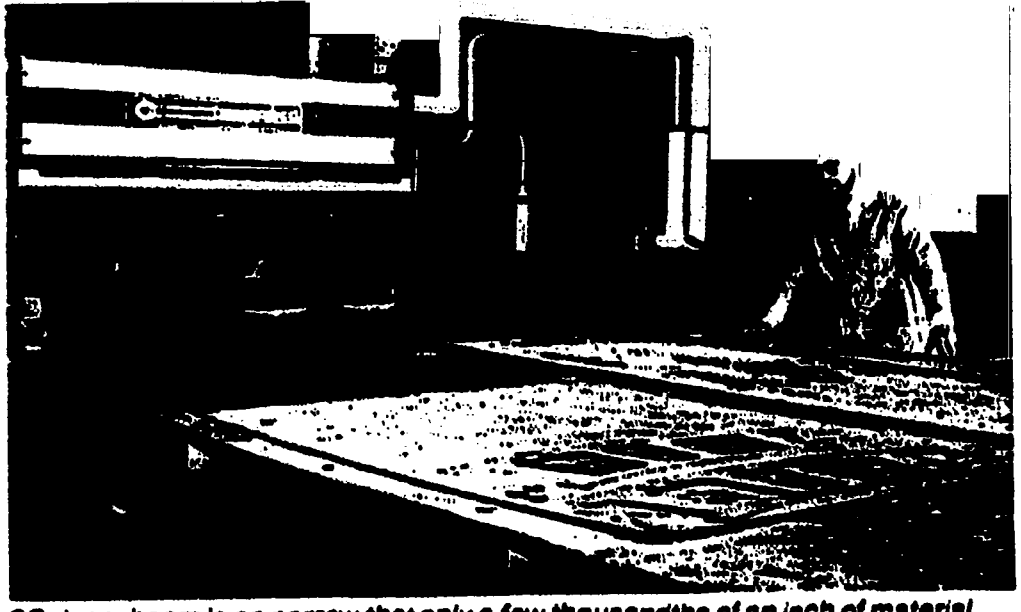

CO_2 laser beam is so narrow that only a few thousandths of an inch of material are removed, allowing accurate complex shapes of high-alloy steel to be cut with sharp definition and virtually dross-free finishes.

Dual-station Everscribe ® ceramic machining center equipped with pulsed CO_2 laser source is usually limited to making 0.015 in. diameter holes, because the ceramic is hard and susceptible to thermal shock. Often, a coaxial gas jet is used to blow away debris and minimize retained heat.

vidual workstations, or pointing them at the workpiece from different directions/angles to cut, weld, or drill a part from both sides.

Choosing a laser

The fact that a laser can process a variety of metal and nonmetal materials does not mean it can be classified as a universal tool. Each application has unique laser processing parameters, in terms of power/energy level, wavelength, beam profile, and beam modulation technique.

Materials react differently to various wavelengths of energy generated by a specific laser source. For example, metals more readily absorb a short wavelength (1.06 μm) energy emitted by a solid-state Nd:YAG (yttrium-aluminum-garnet crystals doped with the rare earth neodymium) and Nd:Glass (neodymium doped glass) lasers. On the other hand, plastics, ceramics, and composite materials, including some metals, absorb long wavelength (10.6 μm) energy from CO_2 sources.

Therefore, lasers must be matched with the materials involved and task to be performed. It is conceivable that two different lasers might work for a particular process, or that one specific type will be capable of performing more than one function.

CO_2 lasers: These lasers dominate the industrial processing field. Most are in the 50 to 1,500 W range, and the major application is metal cutting. Deep penetration welding is also emerging as a viable alternative to electron beam welding (EBW). EBW makes a deeper penetration weld, but that process requires a vacuum chamber, whereas the laser does not. Lasers are also being used for drilling.

The laser can be operated in a continuous wave (CW) or a pulsed (intermittent) output of beam power. The CW output power level is equivalent to the rated total power for a particular model of laser, and the beam is useful for metal cutting, drilling, heat treating, and for many cutting applications where speed, clean vaporization, or a smooth edge is required.

Electronic pulsing produces a leading edge spike of high peak power (typically five to six times greater than the rated CW) that quickly melts and vaporizes the metal during welding or cutting. A single, powerful but short pulse is also useful for drilling because most of the beam energy is used in vaporizing the material and not in heating the area surrounding the spot where the laser beam is focused.

Deeper, more discrete weld penetrations in metals are obtained by beam pulsing. For example, a beam operating in the enhanced pulse mode (with a pulse duration of 4 ms and a repetition rate of 100 pulses/s) can produce a weld rate of 30 ipm for most metals. For example, a 1,250-W laser can achieve 0.1 ipm in stainless steel.

Ceramic drilling has also been improved by taking advantage of the increased peak power and short pulse lengths. One recurring drilling problem has been excessive heating of the substrate during drilling. A burst of short pulses effectively reduces heat input so that high-density hole patterns are produced without thermally fracturing the substrate. Substrates 0.025 in. thick have been laser drilled with 0.007-in.-diameter holes on 0.[illegible] in. centers for a total of 4,900 holes/substrate. Total drilling time per hole is 300 ms. Larger diameter holes are produced by simply moving the beam on the substrate in a circular pattern. The laser, in effect, cuts the ceramic, but because it is pulsed, heat is minimized.

Recent advances in CO_2 technology have improved beam quality characteristics at higher power levels, enabling them to cut, weld, and drill thicker materials faster. A quality cut can now be made in mild or high carbon steel 0.540 in. thick, and the technology is approaching the point where it is economically competitive with plasma cutting.

The balance between power and good beam quality (narrow focus width and highest energy concentration) affects laser performance. The design of contemporary resonators allows lasers to operate in lowest order mode, which can be tailored for a particular application. Different modes are used to obtain varied focus spot sizes.

The transverse electromagnetic

BEAM DELIVERY CONFIGURATIONS CAN INCREASE THROUGHPUT

Some laser/optical techniques can increase throughput from pulsed beam Everpulse® Nd:YAG and Nd:Glass lasers. Dual output and multiple lens array are two methods that can double previous production rates.

Dual output: The laser is assembled with two output windows, which provide two simultaneous and equal outputs, with one-half of the total energy exiting from each end of the laser source.

Assume that a job requires the laser to deliver a 5 ms pulse at 6 J. If a single-output configuration is used, the maximum repetition rate is 60 pulses/min (ppm). If each 6-J pulse processes one part, the throughput would be 60 parts/min.

However, if a dual-output configuration were used operating at an energy output of 12 J (6 J from each output), the maximum repetition rate is also 60 ppm. This would result in a throughput of 120 parts/min.

Multiple lens array: This arrangement splits the laser beam into several individual spots. A typical multiple-lens array is 80% efficient (20% of the laser output is lost), but it is very productive in welding and drilling applications.

For example, assume four round spot welds are to be made on a part, and that the energy required per weld is 1 J at 5 ms. At this energy level, the maximum repetition rate of an Everpulse® Model 11 laser is 40 ppm, which would produce only 10 parts/min.

If a dual-output configuration were used, the maximum throughput would be 20 parts/min. A multiple-lens array (four lenses equals four welds) would require 4.8 J, and at this energy the maximum repetition rate would be 30 ppm, or 26 parts/min.

Productivity can be further increased by combining the dual-output configuration with two multiple-lens arrays. This welding example requires 9.6 J total energy. At this level, the Model 11 can deliver 30 ppm, which results in a throughput of 60 parts/min.

Model numbers 11, 14, and 18, refer to Coherent General equipment.

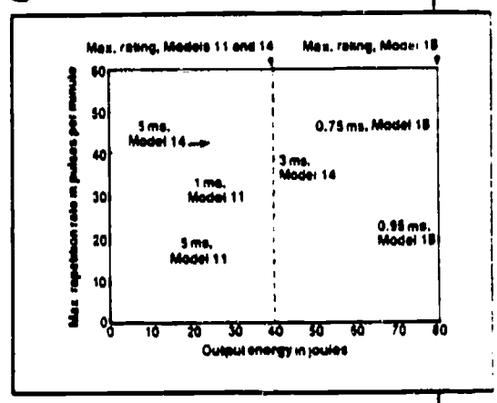

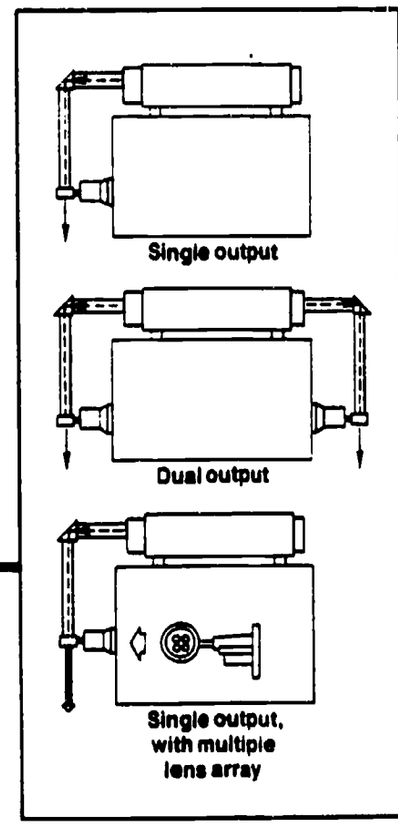

mode is signified by TEM. TEM_{00} provides the sharpest focus and concentrates the maximum power density at the workpiece. It is ideal for most cutting, drilling, and welding applications. A TEM_{01} cross section would show a hollow center, with most of the energy concentrated near the periphery of the focused area. This mode distributes the beam energy efficiently and is used in heat treating and some welding applications. Comparing TEM_{00} to multimode, the difference in focus spot size is only a factor of two, but the power density at the point of contact with the workpiece material reduces geometrically, or by a factor of four.

The significance is that, in many applications, a 250-W TEM_{00} mode laser will perform as efficiently as a 1-kW laser operating multimode.

Solid-state lasers: In the solid-state category, the Nd:YAG is the laser most commonly used in industrial applications. Power ranges from less than 10 to 400 W, and the short wavelength is more readily absorbed by metal than is the CO_2 beam. For that reason, this laser source is often used for low to moderate-power drilling and welding applications in electronic soldering, precision spot welding, and hole drilling. However, the relatively low cutting speed of Nd:YAG lasers limits their use in metal-cutting.

In operation, Nd:Glass lasers do not have the average power levels of YAG and are generally not suited for high production rates. At low operating rates, however, Glass lasers can drill superior quality holes at diameter-to-depth ratios to 1:50.

If spot welding a few contacts per part is required, this thermal tool is suitable. The beam can be divided into three separate finely focused shots or shaped into a rectangle for spot welding or hermetic sealing of components that require localized heating to avoid damage to heat-sensitive parts. They have the additional advantage of about one-third less initial and operating costs than YAG equipment.

Hermetic sealing of steel cans to nickel headers in relays is a natural application for solid-state lasers. The weld must also be crack-free and not affect the glass-to-metal feedthroughs. Here, either the YAG or Glass is used for low-volume.

Because of their short pulse durations (typically 2 to 5 ms) and lower duty cycles, welding with a YAG or Glass laser beam is essentially a "cold" process, with no linear heat buildup in the materials being processed. This allows the welding of heat-treated and magnetic materials without affecting them metallurgically beyond a very narrow HAZ, which literally confines material alteration to the weld.

Cost-effective, laser-drilled holes range in diameter from 0.0005 to 0.06 in. The difficulty in making a smaller diameter opening is due to the inability to maintain adequate depth of focus at this spot size. Holes larger than 0.06 in. diameter may be drilled by trepanning, but this method is slower. Glass lasers have successfully drilled through nickel-cobalt alloys as thick as 1.0 in. at hole diameters of 0.02 in., representing diameter-to-depth ratio as high as 1:50. YAG lasers pen-

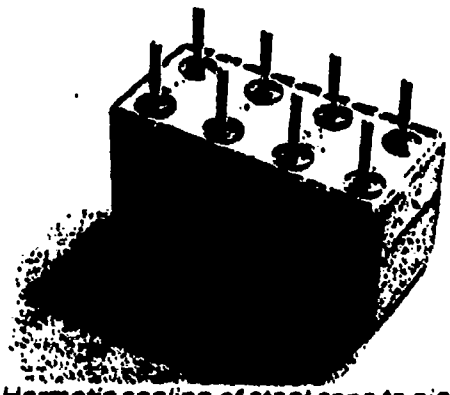

Hermetic sealing of steel cans to nickel headers in relays is done with solid-state lasers. Because the lasers use very short pulses of energy (typically 3 to 5 ms), hermetic seals are made in close proximity to glass-to-metal seals, and on a wide variety of packages containing heat-sensitive elements.

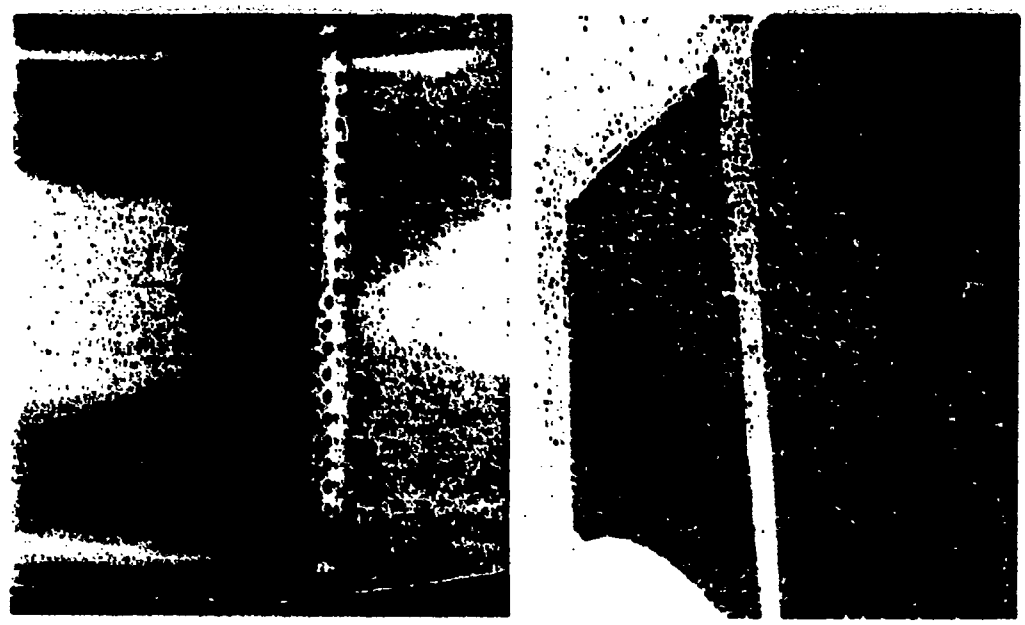

CNC operated, high-power YAG laser drills complex patterns of holes of varying diameter in nickel-cobalt turbine blades for jet engines. Cross-section shows the hole is free from recast or cracking.

etrate 0.75 in. or more with hole aspect ratios in the 1:30 range.

Typical durations of laser drilling pulses are 0.4 to 1 ms. Generally, shorter pulse durations (0.4 to 0.6 ms) produce better quality holes, that is, less distortion and taper, but more pulses are required to drill through the material. Longer pulse durations — to 1 ms — remove more material per pulse, but they create more deformation at the top of the hole.

A recently introduced high-power YAG laser is helping aircraft engine builders reduce the cost of drilling an array of deep cooling holes in vanes and blades made of nickel-cobalt alloy. The laser has a resonator that is adjustable to provide maximum average power of either 250 W in precision drilling configuration or 400 W as a high throughput cutter/driller. The drilled holes vary in diameter from 0.01 to 0.03 in., up to 0.8 in. in depth, and with entrance angles as low as 6° from the surface. All parameters are set through CNC.

Nonlaser processes, including electro-discharged machining (EDM), electrochemical machining (ECM), and electrostatic (ES) drilling, produced clean, straight, accurate holes with minimal recast, no delamination, and no cracking into the parent material, but the cost of production by these slower methods was prohibitive. Investigation showed that laser drilling could produce satisfactory holes quickly and economically.

Economic analysis revealed dramatic benefits with laser drilling. Cost savings ranged from a factor of two for low diameter-to-depth aspect ratio holes to seven on more difficult aspect ratios such as 1:50.

YAG-based automated laser marking systems are becoming the tool of choice to engrave bar codes and optical character recognition (OCR) fonts on such materials as hardened metals, ceramic, carbide, silicon, and most plastics. Laser marking has many advantages over traditional methods. Most important, the mark is permanent and withstands extreme temperatures and hostile environments. It can be used on either flat, curved, or grooved surfaces, and the beam can be optically directed into difficult to reach places. The noncontact nature of the process is a clear advantage in coding small, fragile electronic components, as are high speeds which can range from 2 to 20 times faster than conventional ink-based methods.

Laser marking has some advantage over traditional methods of bar coding because YAG lasers offer great flexibility. Variations include size of the mark, amount of information to be imprinted, and factors relating to the mark itself, such as depth and tracking the geometry of the part.

Laser literacy

Laser processing is now economically competitive with traditional mechanical and thermal methods. Industrial lasers have proved to be reliable, and the mechanical/electronic technology exists to put these nonwearing, high-energy beams to work on the factory floor.

A number of system suppl[illegible] offer laser processing centers with multiaxis motion, high-performance optics, on-line viewing and inspection, automated parts handling, and complete computer control interface. Positioning the workpiece with respect to the focusing optics is accomplished by moving the part, the optics, or a combination of both.

Laser system integrators also offer a range of part-processing choices. For small workpieces in one system, for example, the part is positioned in all five axes (three translation plus two rotation) while keeping the optics stationary to minimize the number of optical surfaces for improved reliability. In other systems, the workpiece may be too bulky for multiaxis positioning, and some axes of motion may be performed with the optics.

Robots will also help integrate lasers into the manufacturing process. Advancements in laser technology, beam-delivery systems, and robot positioning accuracy will p[illegible] a major role in making the laser a mainstay in factory automation and flexible manufacturing. ■

CUTTING AND NOTCHING SHEET METAL

COMPETENCY:

Cut and notch sheet metal.

OBJECTIVES:

1. List safety precautions for using snips, the squaring shears, and the plasma cutter.
2. Explain the cutting procedure for straight cutting snips.
3. Explain how to cut an outside circle with combination snips.
4. Explain how to cut an inside circle with aviation snips.
5. Define the following: square notch, straight notch, slant notch and a full "V" notch.
6. Explain how to avoid wasting metal when cutting out patterns.
7. Identify the main parts of a squaring shear.
8. Recommend the appropriate cutting operation for various situations.
9. List the pros and cons of various cutting operations.
10. Explain when and how to use the plasma cutter.
11. Demonstrate the safe use of all types of snips and the squaring shear.

LEARNING ACTIVITIES:

1. READ pages 17-22 in the Short Course in Sheet Metal Shop Theory by Richard Budzik.

2. READ the Cutting Sheet Metal information sheet.
   Note: A copy of the sheet is included in this guide and the apprentice guide.

3. COMPLETE the questions at the end of each chapter in the text. Questions 1-8 on page 19 and questions 1-10 on page 22. COMPARE your answers with a classmate. Recheck any incorrect answers.

4. PARTICIPATE in class lecture/discussion on cutting sheet metal.
   Note: Be sure to include plasma cutting in your lecture. If possible demonstrate the use of the plasma cutter.

5. WATCH your instructor demonstrate cutting a straight line, an outside circle, and an inside circle.

6. WATCH your instructor demonstrate the squaring shears.
   Note: Begin by explaining the use of the squaring shears. Identify, name and describe the function of the machine parts using a transparency of the Parts of the Squaring Shear information sheet in this guide. Indicate the safety hazards a student may encounter when using the squaring shears. Demonstrate the operation of the shears including adjustment, safe body position, and shearing process. Describe how to determine quality shearing.

7. PRACTICE using the Squaring Shears.
   Note: Select one or two apprentices to perform the basic operation of the squaring shears while the rest of the class observes. Ask the class to comment on their performance by giving suggestions for improvement.

APPLICATIONS:

1. Use hand snips to make the following cuts on sheet metal:
   - straight cuts
   - outside curved cuts
   - internal cuts
2. Use a foot operated squaring shear to cut metal.

EVALUATION/CHECK OUT:

Note: You may wish to use these labs to evaluate student progress or create your own.
1. Use hand snips to make the following cuts to given standards on sheet metal:
   - straight cuts
   - outside curved cuts
   - internal cuts
2. Use hand snips to notch a piece of sheet metal to given standards.
3. Using a foot-operated Squaring Shear, cut three pieces of metal to the dimensions specified by your instructor.

LEARNING MATERIALS:

1. Copies of the text, Short Course in Sheet Metal Shop Theory by Richard Budzik.
2. A transparency of the Parts of the Squaring Shear information sheet.

EQUIPMENT AND SUPPLIES:

Snips
Dividers

Scratch awls
Combination squares
Sheet metal pieces
Squaring shear

INFORMATION SHEET

CUTTING SHEET METAL

Sheet metal can be cut by hand or by machine.

SNIPS

Hand cutting is performed with snips. The most commonly used types of snips are the bulldog, combination, and the left-hand and right-hand aviation snips.

Like any skill, the operation of snips depends upon practice. However, much of the mastery of snips also depends upon knowledge. Remember the following rules when using snips:

1. Keep the small piece of metal over the bottom blade of the snips.

2. Trim off excess metal before making the cut line.

3. Whenever possible, rest the blade and handle of the snips on the workbench. This rule does not apply to aviation snips, since they are too small to use in this manner.

4. When notching, keep the end of the snips blades at the point where the notch will end.

5. Keep oil from the blades of snips. A drop of oil should occasionally be put on the swivel bolt of snips to keep them moving freely. However, do not allow it to run onto the blades, since this will cause the metal to slip out of the blades.

6. Cut only sheet metal with snips. If you use them to cut wire, you are almost sure to nick the blades.

7. Don't force snips.

SQUARING SHEAR

Cutting metal by machine is quicker or more accurate than the hand method.

There are several types of machine shears, but the squaring shear is used most frequently. It is used for trimming or making straight cuts on sheet metal and for cutting sheets so that the sides are square. The cutting and trimming can be done on marked sheets or by using the gages. Squaring shears are equipped with devices called gages which are used as

stops for the sheets when many pieces of the same size are required.

Squaring shears cut various kinds of sheet metal such as tin plate, galvanized iron, black iron, zinc, copper, aluminum, and stainless steel.

One sheet should be cut at a time on the squaring shear. under no circumstances should wire, rod, bar stock, seamed edges, or grooved or welded metal be cut on the squaring shear. They should never be used to cut materials exceeding the capacity of the machine, even if the pieces are small. The bed of the shear should be cleaned before any cutting is done.

The squaring shear should be lubricated periodically depending on its use. As with all machines, it is safe only if operated properly. The following safety precautions must always be followed:

1. Never place your fingers under the blade or hold-down bar.

2. When operating the treadle, use only one foot and keep the other well back to keep from crushing your toes.

3. Be sure the gage of the metal is within the rated capacity of the machine.

4. Cut only one thickness of metal at a time.

5. The shear should be locked when not in use.

INFORMATION SHEET

PARTS OF THE SQUARING SHEAR

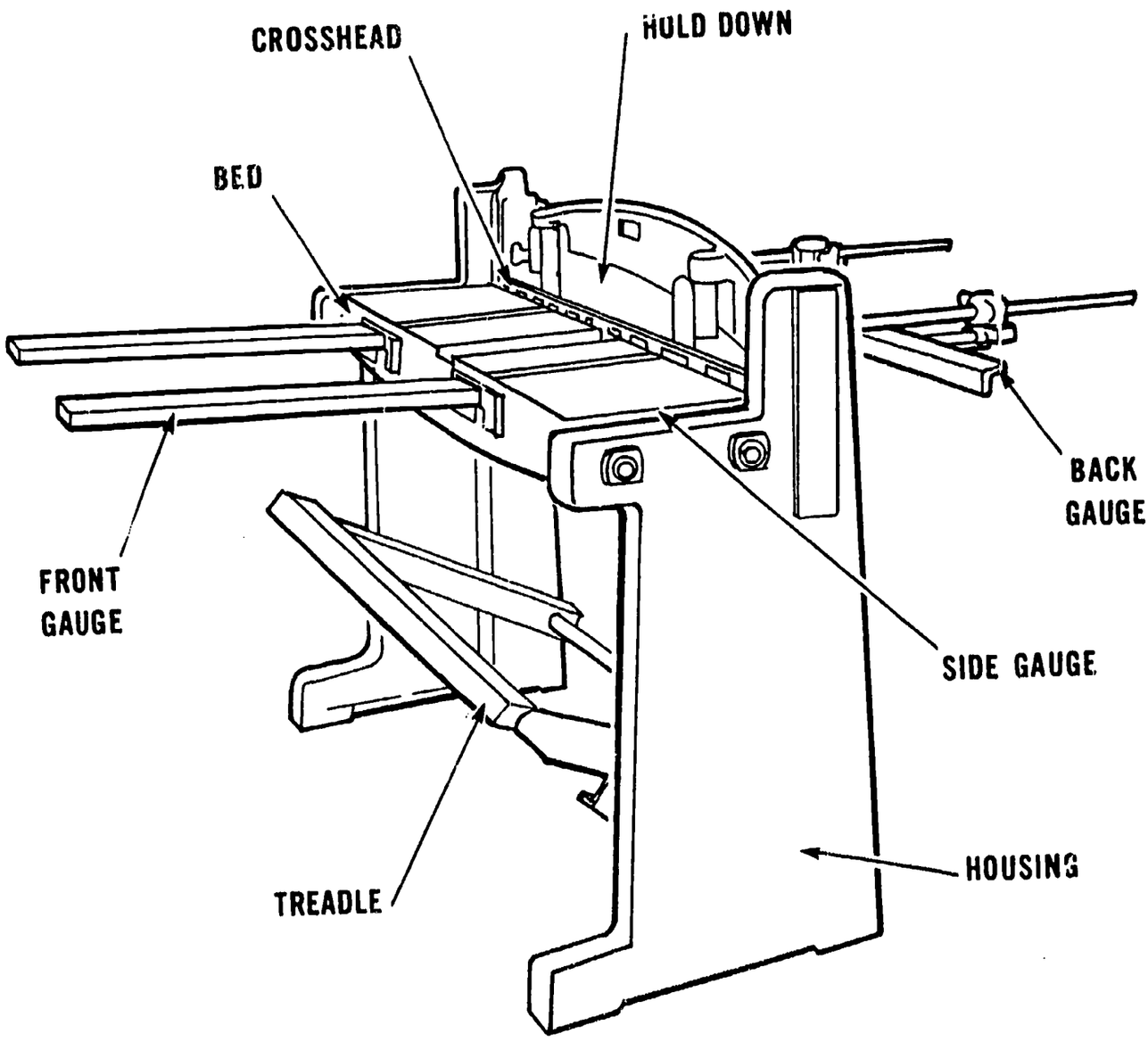

PUNCHING AND DRILLING SHEET METAL

COMPETENCY:

Punch and drill holes in sheet metal.

OBJECTIVES:

1. Explain when to punch vs. drill sheet metal to form holes.
2. Determine the size of holes needed.
3. Use the hand punch and hand lever punch.
4. Use the turret punch.
5. Identify proper backing materials when using the punch.
6. List advantages and disadvantages of using various types of punches.
7. Use a hand drill.
8. Use a drill press.
9. List safety precautions when using drills and punches.
10. Demonstrate the safe use of all types of drills and punches.

LEARNING ACTIVITIES:

1. READ pages 33-36 in the Short Course in Metal Shop Theory by Richard Budzik.

2. COMPLETE the questions at the end of each chapter in the text. Questions 1-16 on page 34 and questions 1-7 on page 36.

3. PARTICIPATE in various labs created by your instructor.
   Note: You may wish to create labs giving students practical practice with the punch and drill. Examples might include:
   a. Sharpen a twist drill bit.
   b. Drill various size holes in different metals.
   c. Practice punching sheet metal using three different types of punches.

4. READ and STUDY the information sheet on Punching and Drilling Sheet Metal.
   Note: A copy of the sheet is included in this guide and the apprentice guide.

5. READ and STUDY the information sheet on Safety Precautions when Drilling and Punching.
   Note: A copy of the sheet is included in this guide and the apprentice guide.

6. STUDY the information sheets on the Types of Punches and Drill Presses and Their Uses.
Note: A copy of each of these are found in this guide.

7. OBSERVE a demonstration from your instructor on the drill press parts and its use.

8. STUDY the information sheet on Cutting Speeds and Cutting Fluids.
Note: A master copy of this sheet is included in this guide.

9. READ the information sheet on Twist Drills and Holding Devices.
Note: A master copy of this information sheet is included in this guide.

10. WATCH your instructor demonstrate the proper use of twist drills and various holding devices.
Note: Another way to do this activity is to ask an apprentice to demonstrate how to use the twist drill while the instructor and other students critique the work.

11. STUDY the three handouts on twist drills:
Parts of a Twist Drill
Speeds for Fraction-Size Drills
Suggested Drill Speeds
Note: Copies of each of these handouts are included in this guide.

12. COMPLETE the Parts and Controls Assignment Sheet.
Note: A copy of this assignment is included in this guide.

13. COMPLETE the Selecting and Setting Cutting Speed and Feed Rate Assignment Sheet.
Note: A master copy of this assignment is included in this guide.

14. COMPLETE the Twist Drill Size Assignment Sheet.
Note: A master copy of this assignment is included in this guide.

15. PARTICIPATE in class lectures and discussions on punches and drills.

16. Optional: VIEW videotapes as assigned by instructor.
Note: Several videotapes are listed in the Resource section.

EVALUATION/CHECK OUT:

1. Submit your Parts and Controls Assignment Sheet.
2. Submit your Selecting and Setting Cutting Speed and Feed Rate Assignment Sheet.
3. Submit your Drill Sizes Assignment Sheet.
4. Demonstrate your knowledge of the objectives in a test situation.

EQUIPMENT:

Various punches
Drill press
Twist drills
Clamping devices
Backing materials

LEARNING MATERIALS:

1. Copies of the text, Short Course in Sheet Metal Shop Theory by Richard Budzik.
15. Copies of a test of Punching and Drilling. Several sample test questions are included in this guide.

RESOURCES:

1. Audio-Visual Material:

   A. "Drill Press" a film from Phoenix/BFA Films and Videos, 468 Park Ave. South, New York, NY 10016 (914-241-1350) This film is 14 minutes long.

   This film shows the procedures for positioning, clamping and drilling. It discusses drill selection and the use of the pilot hole, large diameter drilling and the countersink and counterbore.

   B. "The Drill Press" a film from U.S. Office of Education, 400 Maryland Ave., SW, Washington, D.C. 20202. This film is 10 minutes long.

   This film describes the characteristics, basic operations and functions of the drill press.

   C. "Drill Sharpening" a film from Arthur Morkin Productions, 2900 McBride Lane, Santa Rosa, Ca 95401. This film is 10 minutes long.

   This film illustrates how the correct regrinding of drills greatly affects the accuracy, ease and time of drilling holes. It explains how to maintain the drill in top condition for uninterrupted production.

2. Handbooks:

A. "The Use and Care of Twist Drills." This handbook, published by The Cleveland Twist Drill Co., gives information on the following: speeds and feeds, cutting fluids, jig drilling, drilling of small diameter holes, drilling different types of materials and drill and countersinks combined. They also publish handbooks entitled, "Use and Care of Reamers" and "Use and Care of Taps."

Available from The Cleveland Twist Drill Co., 1242 East 49th Street, Cleveland, Ohio. 216-431-5050.

B. "Drilling Guide." This handbook, published by Sandvik Coromant Company, gives information on the following: short hole drilling, deep hole drilling, trouble shooting, machining economics, technical date and material cross reference list.

Available from Sandvik Coromant Company, 1702 Nevins Road, Fair Lawn, N.J. 07410. 201-794-5000.

C. "Taps." A guide to general purpose and special purpose taps used in sheet metal work available from Besly Products Corporation, 100 Dearborn Avenue, South Beloit, Illinois 61080. 815-389-2231.

D. "Tap Guide." A guide to selecting the right tap and treatment for the material is available from TRW Greenfield and Die Division, Sanderson Street, Greenfield, Massachusetts 01301. The cost is $1.00.

INFORMATION SHEET

PUNCHING AND DRILLING SHEET METAL

In making sheet metal projects, various holes are usually required for rivets, bolts, sheet metal screws, or merely as a portion of the project design. The holes can either be **punched** or **drilled**, depending of the following factors:

1. The diameter of the hole.

2. The thickness of the sheet metal.

3. The distance from the center of the hole to the edge of the pattern.

4. Convenience and availability of tools and equipment.

5. The shape of the hole.

6. The size of the sheet metal pattern.

In punching a hole in sheet metal, a punch forces the metal through the die, leaving a clean hole. The drilling operation produces a circular hole in a piece of metal by gradually removing tiny metal chips until the required hole size is obtained. Punching a hole in sheet metal differs from drilling a hole in sheet metal in the following ways:

1. The punched-out metal remains in a single piece. The drilled-out metal is in many tiny pieces or "chips."

2. The punching process punches the entire hole in a single motion. In the drilling process, the hole is smaller at first, gradually increasing in size, until it is the required size.

3. Punching can be done with hand tools, hand-operated machines, and electric powered machines. Drilling can be done with hand tools, and electric powered machines.

4. Special punches can be purchased to punch holes of nearly any shape. Drills can be used only for round holes.

INFORMATION SHEET

SAFETY PRECAUTIONS WHEN DRILLING OR PUNCHING

1. Keep your hands away from moving parts.
2. Protect your eyes form flying chips.
3. Do not handle metal chips with your hands. Use a brush to clean chips from the drill.
4. Do not wear loose clothes, and keep long hair tied back while operating the drill press.
5. Make sure that machines are in good working order.
6. Keep drills and punches sharp and clean.
7. Clamp your work solidly. Do not hold work with hands.
8. NEVER attempt to stop machines with your hands.
9. Stop machine when measuring or making adjustments.
10. Place a piece of wood over the table when removing drill bits from the drill press to prevent the bits from falling through the holes in the table.
11. Treat cuts and scratches immediately.
12. ALWAYS remove chuck key from the chuck before turning on the power.
13. Wipe spilled cutting oil from machine and floor.
14. Do not misuse the drill press.
15. Report any damage to the instructor or person in charge.
16. If the metal slips, stop the machine before touching it or making any adjustments.
17. Always operate the machine at the appropriate speed- higher speeds for smaller twist drills and slower speeds for larger twist drills.
18. If the twist drill sticks into the metal, turn off the power before tightening the chuck.
19. Never reach around or near a moving drill.
20. Never lower your head when the machine is operating.

INFORMATION SHEET

TYPES OF PUNCHES AND THEIR USES

SOLID PUNCH

The solid punch is sometimes used to make holes for rivets and for starter holes for sheet metal screws. Proper backing is essential when using the solid punch to prevent excessive distortion of the metal around the hole. The materials used for backing are either a lead cake or a block of wood. When using a wood block, always place the metal on the end grain of the wood. This way, the wood absorbs most of the pressure, minimizing distortion of the metal.

TURRET PUNCH

These punches are of different capacities and sizes. The size most used is for holes from 1/8 inch up to 2 inches in diameter. These punches are designed so the upper punch and the lower die are mounted on two revolving tables or turrets. The turrets can be released and turned instantly to allow for immediate setting for the hole desired. These punches have a deep reach and have an immediate setting. It is important to always have the same size punch and die aligned to avoid broken punches.

HAND LEVER PUNCH

The hand lever punch is used for punching small round holes in sheet metal, upward to 18-gauge. Its use is restricted, since the maximime distance of the hole from the edge of the sheet metal pattern can be only 1 3/4 inch. The hand lever punch set is provided with seven punches and dies for punching round holes.

The general operations of all hand lever punches are the same but the methods of changing punches and dies are different. In general, the punches and dies are changed in the following steps:

1. Remove the die with a screw driver or key provided for the purpose.
2. Open the punch.
3. Remove the threaded collar.
4. Remove punch from collar.
5. Replace the correct size punch in collar.
6. Replace the threaded collar.

7. Return the levers to normal position.
8. Replace the correct size die.
9. Adjust the die with a screw driver until the punch just barely punches a clean hole.

The centers needing to be punched are marked with a prick punch. In punching a hole, the centering point of the punch is placed in the prick point of the work. The hole is then completed by pressing down the upper lever.

FLOOR AND BENCH LEVER PUNCHES

These punches are basically the same machine; but the bench model is purchased without the special stand and is attached to a workbench top. This type of machine is extremely strong and sturdy; it is used for punching the heavier gauges of sheet metal and for the larger holes.

INFORMATION SHEET

TYPES OF DRILLS PRESSES AND THEIR USES

The drill press is used for various drilling operations, the most common of which is drilling holes. There are many types of drill presses but they all work on the same principle, that is, rotating a twist drill by power. All drill presses must have some means of holding the work on the table and of adjusting the speed of the spindle for the different sizes of drills and kinds of materials.

BENCH MODEL	Operated by rotating a cutting tool against the material with enough pressure to cut and penetrate the material. It is usually mounted on a bench and is smaller than floor-type drill press. Used for small jobs.
FLOOR MODEL	Operates in the same principle as the bench-type drill press. Used for larger jobs due to larger working area of table movement.
GANG DRILL	A drilling machine with several drilling spindles fastened in line to a single long table. It is used in mass production in doing a series of operations, one after the other. One operation may often require several different drill sizes.
UPRIGHT DRILL	Similar to floor-type drill press used in making heavy-duty drilling. It usually has a gear-driven mechanism for different spindle speeds and an automatic or power feed device. It will receive larger drills and cutters than the standard bench and floor-type drill presses.
RADIAL DRILLING MACHINE	Handles large workpieces that cannot be moved easily. It has a large arm extending out from the column which can be raised or lowered, and which also swings in a complete circle around the column. The drilling head moves back and forth on this arm.
MULPIPLE-SPINDLE DRILL HEAD MACHINE	This machine may have from four to 48 or more spindles which are driven by one gear drive in the head. These are mass-production drilling machines. Some have several drill heads, with many spindles

making it possible to drill as many as 100 holes at one time.

PARTS OF THE DRILL PRESS

BASE	Supports the machine.
TABLE	Supports the workpiece.
COLUMN	Supports the table.
TABLE CLAMP LEVER	Locks the table to the column.
CHUCK	Holds or clamps the drill in place.
SPINDLE LOCK CLAMP	Locks the spindle in place.
DEPTH GAUGE	Measures the depth of holes.
SWITCH	Turns the power on or off.
SPEED ADJUSTMENT HANDWHEEL	Control with dial which adjusts cutting speed.
POWER ASSEMBLY	The system of electric motor, pulleys, and belts to provide and transmit power needed to operate machine and cutting action.

OPERATIONS PERFORMED ON THE DRILL PRESS

DRILLING	To produce a hole in metal with a drill bit.
COUNTERSINKING	To shape a drilled hole in material with a cone-shaped tool to provide a recess for a flat head screw or bolt.
COUNTERBORING	To drill a second larger hole a specified depth, using the same center as the original hole.
TAPPING	Is done with hand tap and wrench to cut internal threads in holes.
SPOT-FACING	Making circular spots on uneven surfaces to produce a finished flat surface for a head of a bolt or nut.
BORING	To make a hole larger, using a single-

	pointed cutting tool.
SPOT FINISHING	A means of polishing and finishing surfaces with numerous circular turns, using a wood dowel and grinding compound.
REAMING	Used to finish a drilled hole to an accurate size.

INFORMATION SHEET

CUTTING SPEEDS AND CUTTING FLUIDS

The **speed** of the drill is usually measured in terms of the rate at which the outside of the tool moves in relation to the work being drilled. The cutting speed that the drill rotates is shown in FEET PER MINUTE (FPM). The REVOLUTIONS PER MINUTE (RPM) of the spindle must be adjusted by means of the stepped pulleys for the size of drill used. The range of the spindle RPM is usually marked on the head of the drill press. On every job there is the problem of choosing a speed which will permit the highest rate of production without entailing excessive drill costs or down-time for tool sharpening. The most efficient speed for operating a drill will depend on many variables, some of which are:

1. Composition and hardness of material.
2. Depth of hole.
3. Efficiency of cutting fluid.
4. Type and condition of drilling machine.
5. Quality of holes desired.
6. Difficulty of set-up.

On most jobs, it is usually better to start with a slower speed and build up to the maximum after trials indicate the job can be run faster.

Feed means the speed at which a drill is fed into the work with each revolution. Feed rates for drilling are governed by the size of the drill, machineability of the material being drilled and depth of the drilled hole. Small drills, harder materials and hole depths in excess of 3 to 4 drill diameters require additional consideration in selecting appropriate feeds. Since the feed partially determines the rate of production and also is a factor in tool life, it should be chosen carefully for each particular job.

A SPEED AND FEED TABLE is used for the following applications:

1. Provides speed and feed recommendations for various materials.
2. Lists speeds for each drill size under RPM column.
3. Shows feeds for each type of metal.
4. Gives clues to use in checking correct manual feed on drill presses:
   a. Uniform chips-indicate drill is fed correctly.
   b. Chatter or scraping noise-indicate drill is dull, or is too slow.
   c. Chipped cutting edges, broken drills, and drill heating, even with coolant-show feed is too fast.

In figuring speeds use the following simple formula:

$$RPM = \frac{4 \times CS}{D} \text{ (Cutting Speed)}$$

EXAMPLE: Obtain recommended cutting speed for drilling aluminum with 250 FPM cutting speed.

1. Convert drill diameter--1/4 inch--to decimal--.250
2. Place figures in formula:

$$RPM = \frac{4 \times CS}{D}$$

$$RPM = \frac{4 \times 250}{.250}$$

3. Calculate:

$$RPM = \frac{4 \times 250}{.250} = \frac{1000}{.250} = 4000 \text{ RPM}$$

Lubricants or cutting fluids are needed when drilling. They are used to cool a drill during drilling so it will not lose its hardness and become dull. A rise in temperature of the drill could also result in burning the drill. The lubricant also reduces friction at the cutting edge and reduces the tendency of chips to become welded to the lip. Lastly, lubricants improve the finish of the work.

The kind of lubricants used vary with the kind and hardness of the metal being drilled. The following list is frequently used cutting fluids:

1. Cutting oil: Petroleum mineral oil base.
2. Emulsifiable oil: Mineral oil and water base.
   a. is mixed with water.
   b. has better coolant properties than cutting oils.
   c. contains rust inhibitors.
3. Kerosene: Used in cutting aluminum and its alloys.
4. Compressed air: Used when machining cast iron.
5. Cutting wax: Developed for use as cutting compounds to be used with other cutting fluids.

INFORMATION SHEET

TWIST DRILLS AND HOLDING DEVICES

When drilling by hand, the electric hand drill is used. Twist drills are used as the cutting tool when drilling holes. The size of the drill is marked of the shank of the drill. The different parts of the drill are:

POINT

Cone-shaped end that does the cutting
Consists of:

a. Dead center: Sharp edge at the tip of the drill.
b. Lips: Cutting edges of drill.
c. Heel: Portion of the point opposite the cutting edge.

SHANK

End of drill bit that is attached to the drill press.

a. Straight: Used with a chuck.
b. Tapered: Have self-holding tapers.
   1. Morse taper: No. 1 to No.5 taper that fit directly into drill spindle.
   2. Tang: Is on tapered shank which fits into the spindle slot.
   3. Tapered sleeve: A device to adapt different sizes of drill shanks.

BODY

Portion between point and the shank.
Consists of:

a. Flutes: Spiral grooves running the length of drill body.
   1. Help form cutting edge.
   2. Curl chips tightly for easy removal.
   3. Forms channels for chip removal.
   4. Allow coolants and lubricants to flow to cutting edge.
b. Margin: Narrow strip extending back length of drill to form the full diameter of the drill bit.
c. Body clearance: The reduced part that cuts down friction between wall of hole and drill.
d. Web: Metal column that separates the flutes, increases thickness towards the shank to give strength.

There are two types of drills. The carbon steel drill is used for soft materials and the high speed steel drill is used for hard materials.

Drill size charts show drill diameters and are available in letters, fractions, and metric sizes.

Numbers	#80 to #1
(0.135 to 0.2280 inches diameter)	
Letters	A to Z
(.234 to 0.413 inches diameter)	
Fractions	1/64 to 63/64 inches diameter
Metric	3mm to 76mm
(0.1181 to 2.9921 inches diameter)	

Twist drill gauges are used to check the sizes of drill bits. Gauges are available in numbers, letters, fractions and metric sizes.

Work holding devices are used to clamp work solidly while operation is performed and to prevent injury to drills and machines and the person using the drill. Holding devices include:

VICES	Safest of workholding devices when bolted to table. a. Should have wood or flat stock placed under work to prevent damage to vise. b. Require the use of parallels to raise work in the vise jaws.
V-BLOCKS	Used to support round work when drilling. a. Made in various shapes. b. Some have clamps to assist in holding.
T-SLOT BOLTS	Fit into table slots. a. Used with washer and nut. b. Come in various lengths.
STRAP-CLAMPS	Used for clamping unevenly shaped parts. a. Comes in various lengths. b. Used with T-bolts.
STEP BLOCKS	Support strap clamps opposite the work at any level.
ANGLE PLATE	Used where work needs to be clamped to a vertical support.

DRILL JIGS	Used when holes are to drilled in a number of identical pieces.
C-CLAMPS	Used for clamping flat stock.

INFORMATION SHEET

PARTS OF A TWIST DRILL

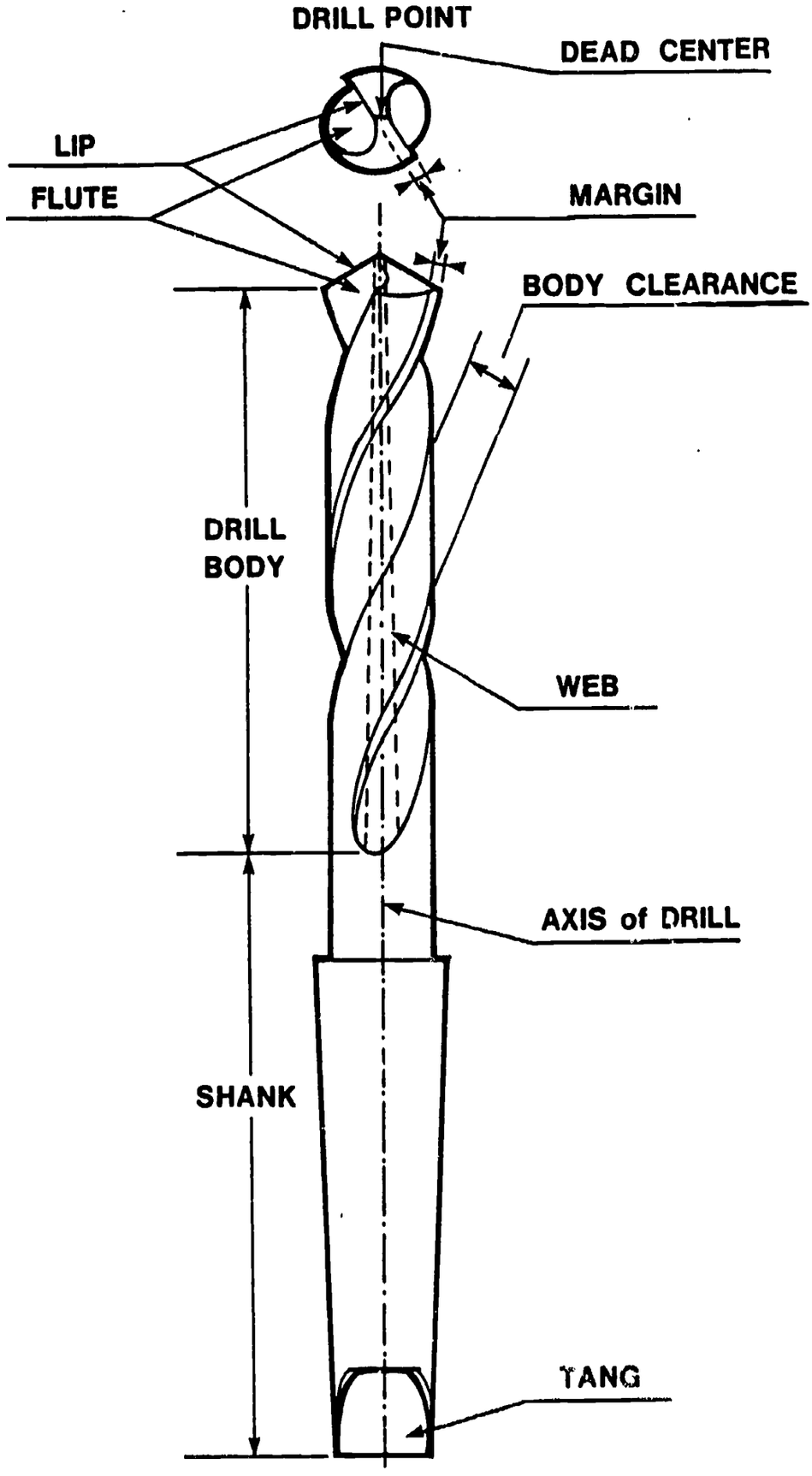

INFORMATION SHEET

SPEEDS FOR FRACTION-SIZE DRILL

Feet per Min.	30	40	50	60	70	80	90	100	110	120	130	140	150
Diam. (Inches)	Revolutions per Minute												
1/16	1833	2445	3056	3667	4278	4889	5500	6111	6722	7334	7945	8556	9167
1/8	917	1222	1528	1833	2139	2445	2750	3056	3361	3667	3973	4278	4584
3/16	611	815	1019	1222	1426	1630	1833	2037	2241	2445	2648	2852	3056
1/4	458	611	764	917	1070	1222	1375	1528	1681	1833	1986	2139	2292
5/16	367	489	611	733	856	978	1100	1222	1345	1467	1589	1711	1833
3/8	306	407	509	611	713	815	917	1019	1120	1222	1324	1426	1528
7/16	262	349	437	524	611	698	786	873	960	1048	1135	1222	1310
1/2	229	306	382	458	535	611	688	764	840	917	993	1070	1146
5/8	183	244	306	367	428	489	550	611	672	733	794	856	917
3/4	153	203	255	306	357	407	458	509	560	611	662	713	764
7/8	131	175	218	262	306	349	393	436	480	524	568	611	655
1	115	153	191	229	267	306	344	382	420	458	497	535	573
1 1/8	102	136	170	204	238	272	306	340	373	407	441	475	509
1 1/4	92	122	153	183	214	244	275	306	336	367	397	428	458
1 3/8	83	111	139	167	194	222	250	278	306	333	361	389	417
1 1/2	76	102	127	153	178	204	229	255	280	306	331	357	382
1 5/8	70	94	117	141	165	188	212	235	259	282	306	329	353
1 3/4	65	87	109	131	153	175	196	218	240	262	284	306	327
1 7/8	61	81	102	122	143	163	183	204	224	244	265	285	306
2	57	76	95	115	134	153	172	191	210	229	248	267	287
2 1/4	51	68	85	102	119	136	153	170	187	204	221	238	255
2 1/2	46	61	76	92	107	122	137	153	168	183	199	214	229
2 3/4	42	56	69	83	97	111	125	139	153	167	181	194	208
3	38	51	64	76	89	102	115	127	140	153	166	178	191

INFORMATION SHEET

SUGGESTED DRILL SPEEDS

Material to be Drilled	Cutting Speed (Surface Feet per minute)
Aluminum and its alloys	200-300
Bakelite	100-150
Brass and bronze, soft	200-300
Carbon, pure(carbide drills)	70-150
Cast iron, soft	100
Cast iron, hard	100-150
Magnesium and its alloys	250-400
Malleable iron	80-90
Nickel and monel	40-60
Steel, machinery	80-100
Steel, annealed	70-80
Steel, tool	50-60
Steel, forged	50-60
Steel, alloy (300 to 400 Brinnel)	20-30
Steel, stainless, free machining	30-40
Steel, stainless, hard	30-40
Steel, manganese	15

Source: American Machinist. Speeds shown above are for high-speed steel drills. Carbon steel drills should be run at from 40 to 50 per cent of those for high-speed steel drills. These are recommended speeds; the best speed in each case must be based on the specific conditions, material, set-up, etc.

ASSIGNMENT SHEET

PARTS AND CONTROLS

After observing your instructor demonstrate the use of the drill press, perform the following functions on the drill press. Have a fellow student check off the functions after you have properly accomplished them.

1. Turn on the machine	
2. Lower and raise spindle	
3. Adjust spindle RPM	
4. Adjust depth stop	
5. Lock spindle clamp	
6. Adjust table height	
7. Lock table	
8. Stop machine	

ASSIGNMENT SHEET

SELECTING AND SETTING CUTTING SPEED AND FEED RATE

1. What is the formula to find RPM if given cutting speed and the diameter of the drill?

2. What is the cutting speed for aluminum?

3. Find the RPM for a 1/2 inch drill when drilling brass.

4. Find the RPM for a 1/4 inch drill when drilling cast iron.

5. Find the RPM for a 1 inch drill when drilling mild steel.

6. List the feed rate for drilling aluminum with a 3/16 inch drill.

7. List the feed rate for drilling cast iron with a 7/8 inch drill.

8. List the feed rate for drilling common bronze with a 3/8 inch drill.

9. List the feed rate for drilling spring steel with a 3/32 inch drill.

ASSIGNMENT SHEET

TWIST DRILL SIZES

Measure the twist drills provided by your instructor with both the micrometer and the drill size gauges. List your readings in the proper columns.

DRILL SAMPLE	MICROMETER READING	DRILL GAUGE SIZE
1.	_____	_____
2.	_____	_____
3.	_____	_____
4.	_____	_____
5.	_____	_____
6.	_____	_____
7.	_____	_____
8.	_____	_____
9.	_____	_____
10.	_____	_____

SAMPLE TEST QUESTIONS

PUNCHING AND DRILLING

Note: Use the following to create a test on punches and drills.

List five safety precautions to remember when punching and drilling.

1. _____

_____

2. _____

_____

3. _____

_____

4. _____

_____

5. _____

_____

List three factors that will determine when you would punch sheet metal verses drilling sheet metal.

1. _____

_____

2. _____

_____

3. _____

_____

List three purposes of cutting fluids.

1. _____

_____

2. _____

_____

3. _____

_____

Name two common punches.

1. _____

2. _____

Name the two types of common shop drill presses.

1. _____

2. _____

Multiple Choice:

1. The surface speed that the drill rotates is called the:
   a. feed
   b. cutting speed
   c. RPM

2. The cutting speed of a drill is shown in:
   a. revolutions per minute
   b. inches
   c. feet per minute

3. The speed at which a cutter is forced into the work with each revolution is the:
   a. operation
   b. feed
   c. drilling ability

4. The speed and feed tables provide the drill operation with information about:
   a. the length of the drill bit
   b. the size of the drill press
   c. the recommended feed and speed for drilling various types of metal.

5. Correct feed of a properly sharpened drill bit into the work will most likely make:
   a. uniform chips
   b. chatter
   c. chipped cutting edges on the drill

6. The proper formula for figuring RPM of a drill when you do not have a table is:

a. $RPM = \frac{4 \times D}{CS}$

b. $RPM = \frac{4 \times \text{length of drill}}{CS}$

c. $RPM = \frac{4 \times CS}{D}$

7. The abbreviation CS stands for:
   a. cutting speed
   b. diameter of the drill
   c. cutting surfaces

8. The RPM used for drilling a 1 inch hole in metal with a cutting speed of 50 surface feet per minute would be:
   a. 100 RPM
   b. 200 RPM
   c. 300 RPM

Matching:

_____1.	Used for cutting holes.	a.	column
_____2.	Supports cutting tool.	b.	parallels
_____3.	Holds or clamps drill in place.	c.	kerosene
_____4.	Supports table.	d.	base
_____5.	Distance from column to center of spindle.	e.	table
_____6.	Used to measure hole depth.	f.	C-clamp
_____7.	Locks spindle in place.	g.	speed and feed table
_____8.	Used to adjust cutting speeds.	h.	vise
_____9.	Provides necessary power to drill press.	i.	size
_____10.	Supports workpiece.	j.	depth gauge
_____11.	Provides recommended speed and feed.	k.	wash chips away from hole
_____12.	Uniform metal chips.	l.	strap clamps
_____13.	Used when cutting aluminum.	m.	chips from proper feed

_____14. Used when cutting cast iron.
_____15. One function of cutting fluids.
_____16. To hold work in place solid during operations.

_____17. Most commonly used holding device.

_____18. Use with T-bolts.

_____19. Used for clamping flat stock.

_____20. Hardened stock to raise work in vise.

n. chuck
o. power assembly

p. purpose of holding device

q. compressed air

r. speed adjustment handwheel

s. twist drill

t. spindle lock clamp

ANSWERS TO SAMPLE TEST QUESTIONS

Multiple choice:

1. b
2. c
3. b
4. c
5. a
6. b
7. a
8. b

Matching:

1. s
2. d
3. n
4. a
5. i
6. j
7. t
8. r
9. o
10. e
11. g
12. m
13. c
14. q
15. k
16. p
17. h
18. l
19. f
20. b

BENDING AND SHAPING SHEET METAL

COMPETENCY:

Bend and shape sheet metal.

OBJECTIVES:

1. List safety precautions for use with bending and shaping machines.
2. Use the bar folder, making all normal adjustments.
3. Use the hand brake and the box and pan brake, making all normal adjustments.
4. Identify the major parts of a bending brake.
5. Tell how to adjust the brake for handle tension and set back.
6. Discuss the appropriate sequencing of bends.
7. Summarize the limitations of a press brake.
8. Set up the press brake.

LEARNING ACTIVITIES:

1. READ pages 23 - 29 in a Short Course in Sheet Metal Shop Theory by Richard Budzik.

2. READ the Bending Sheet Metal information sheet.
   Note: A copy of the sheet is included in this guide and the apprentice guide.

3. COMPLETE the questions at the end each chapter in the text. (Section 8 questions on page 24, section 9 questions on page 26, and section 10 questions on page 29.) CHECK the answers to the questions with another student or your instructor. REVIEW any questions you missed.

4. WATCH your instructor demonstrate the bar folder, hand brake and box and pan brake. PARTICIPATE in a class discussion about them.
   Note: A transparency master depicting the parts of the bar folder and bending brake are included in this guide.

5. COMPLETE the Fabrication Lab assigned by your instructor.
   Note: Several labs are included in this guide. Use one or more of the suggested labs, or create your own.

APPLICATIONS:

1. Set up the press brake.
2. Use the bar folder, making all necessary adjustments.

3. Use the hand brake.
4. Use the box and pan brake.

EVALUATION/CHECK OUT:

1. Submit your fabrication lab(s) for grading.
   Note: Possible ideas for testing the objectives in this unit include:
   - Use a bar folder to make a hem bend to given standards
   - Use a bar folder to make a Pittsburgh lock
   - Use a box and pan brake to make right-angle bends to given standards on light gage stock
   - Use a box and pan brake to make a government clip to given standards
2. Submit your Applications checklist.
3. Demonstrate your knowledge of objectives in a test situation.
   Note: Several sample test questions are included in this guide.

LEARNING MATERIALS:

1. Copies of the text, Short Course in Sheet Metal Shop Theory by Richard Budzik.
2. Optional: Transparencies of the Adjustable Bar Folder and Bending Brake.
3. Copies of a test on Bending and Shaping. Several sample test questions are included in this guide.

EQUIPMENT AND SUPPLIES:

Bar folder
Hand brake
Box and pan brake
Sheet metal pieces
Spot welder (optional)
Solder or pop rivets
Shears
Marking gage

INFORMATION SHEET

BENDING SHEET METAL

BAR FOLDER

The bar folder is a machine for folding or bending sheet metal edges such as are used for seams and hems. Folds are limited to a width of 1" or 1-1/4", depending on the size of the bar folder.

This machine is adapted for bending edges of 22 gage metal or lighter.

BRAKE

A brake is a machine for bending and folding sheet metal. Unlike the bar folder, the brake can bend or fold the metal any distance from the edge. Moldings can be made on the brake by using a mold.

HAND BRAKE

The standard hand brake is used for bending sheet metal to various shapes, such as right-angle bends, other-angle bends, radius bends, hemmed edges, and the various seams. Many sheet metal projects require a combination of the various bends. The most important point to keep in mind is to follow the correct operations sequence.

BOX AND PAN BRAKE

The box and pan brake was designed to allow boxes, pans or trays to be folded from one piece of metal. The upper jaw is made of a number of blocks of different widths which can be put together in any combination so as to make a bend of any width desired. This permits the sides to be bent between the opposite sides which have already been bent.

The box and pan brake is build with interchangeable and removeable fingers that can be set up quickly.

FABRICATION LAB

MAKING A ONE-PIECE BOX

---

1. Study page 84 in the Short Course in Sheet Metal Shop Theory text.

2. Determine the dimensions of the materials needed (stretch out for pattern).

3. Shear blank metal piece.

4. Use a marking gauge to layout seams and edges.

5. Notch and clip pattern.

6. Use original pattern and duplicate.

7. Bend up second pattern hem.

8. Bend up sides in box and pan brake (bend sides that bend tabs first).

9. Spot weld corners. If spot welder is not available, pop rivet corners, using one rivet in each corner.

10. Solder inside corners (optional).

11. Put name on box.

FABRICATION LAB

SETTING THE HAND BRAKE

In this lab you will set the hand brake for the proper handle tension and setback for the gage of metal given by the instructor.

1. Obtain a sample of metal from your instructor.

2. Determine the thickness of the sample to the nearest 1/32".

3. Set back the top leaf of the brake 1-1/2 times the thickness of the metal.

4. Set back both ends of the brake equally.

5. Put the sample in the brake and set both ends of the brake to the proper handle tension.

6. Have your instructor inspect the brake after it is completely set.

FABRICATION LAB

SINGLE AND DOUBLE HEMMED EDGE

In this lab you will operate and adjust the bar folder.

Material:
Galvanized steel 3" X 10", 26 gage or lighter.

Specifications:
Make a 3/8" inch double hem on one side of a strip of metal and a 1/4" single hem on the other side.

Directions for Single Hem:

1. Cut a strip of metal to the required size.

2. Set the gage of the bar folder for a 3/8" hem. Before setting the gage, the gage adjustment should be checked by turning the gage adjusting screw until the fingers are flush with the edge of the folding blade. The reading of the gage should then be zero. If it is not, loosen the screw and set the plate.

3. Insert the edge of the metal to be folded between the folding blade and the jaw.

4. Pull the handle forward as far as possible.

5. Insert the hem between the folding wing and the blade with the folded edge facing upward.

6. Pull the handle forward as far as possible, completing the single hem.

7. Reset the gage for a 1/4" width hem and repeat the operations, completing the single hem.

Directions for Double Hem:

1. Reset the gage of the bar folder for a 3/8" width edge. For light metal, both hems may be turned with the same gage setting, it is then possible to complete the double-hemmed edge before resetting the gage.

2. Insert the 3/8" hem with the folded edge upward, between the folding bar and the jaw.

3. Push the handle forward as far as it will go.

4. Release the metal by returning the handle to its former position.

5. Turn the metal over and insert the double hem between the folding bar and the blade, then push the handle forward as far as possible completing the double hem.

INFORMATION SHEET

PARTS OF THE BENDING BRAKE

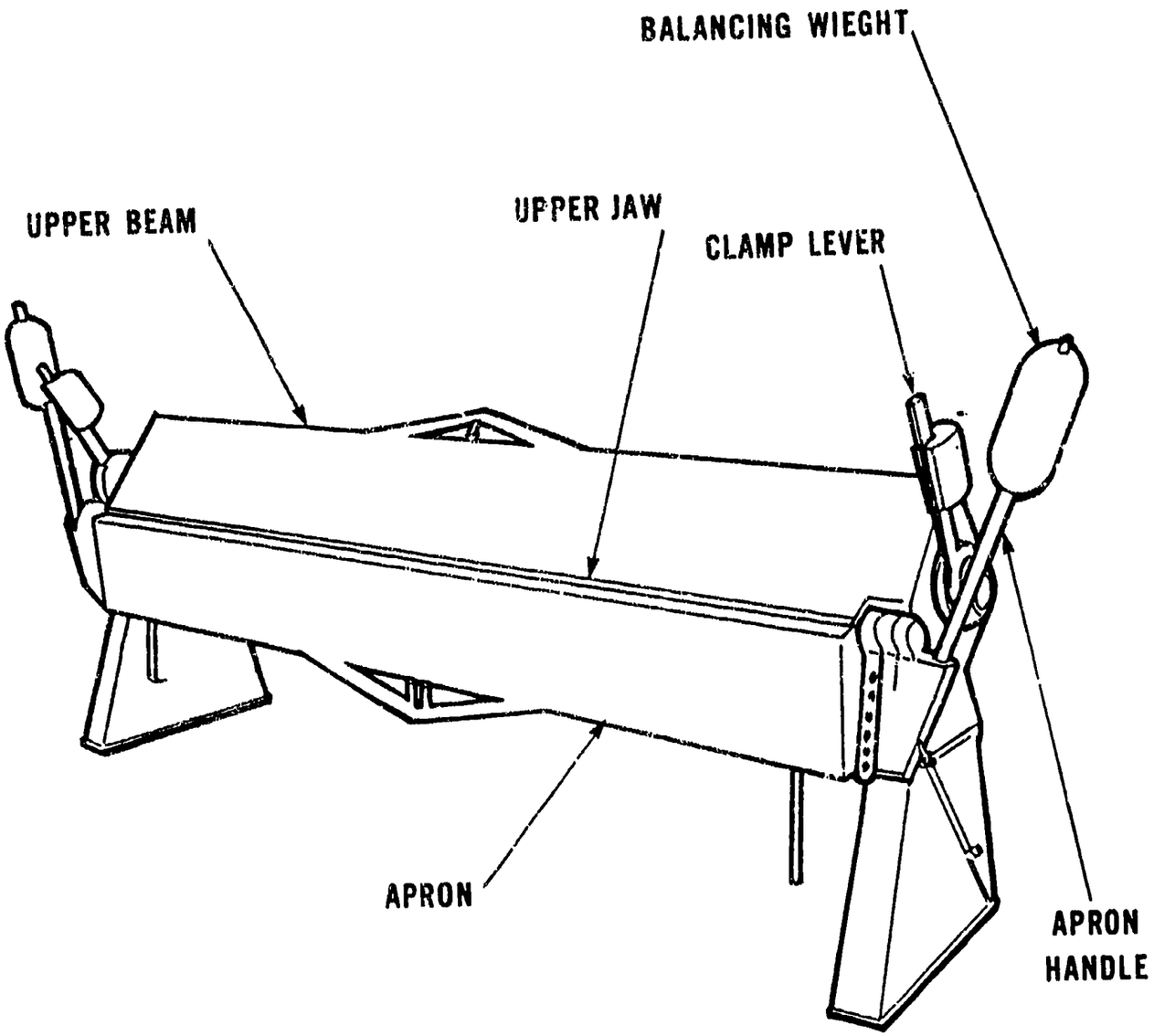

INFORMATION SHEET

PARTS OF THE BAR FOLDER

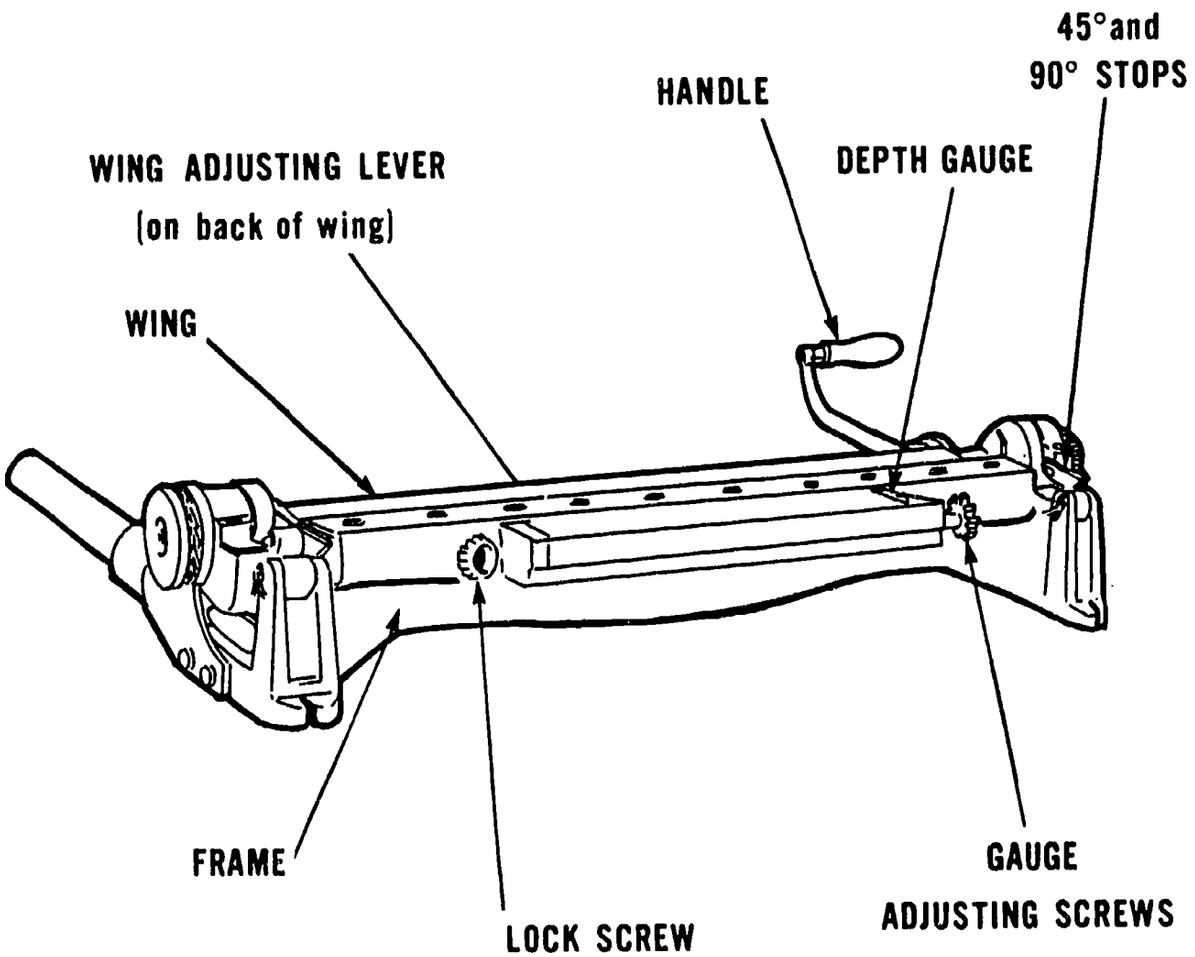

SAMPLE TEST QUESTIONS

BENDING AND SHAPING SHEET METAL

Note: Use these questions to prepare a test on bending and shaping.

1. What is the difference between a bar folder and a brake?
   a. There is no difference
   b. It can make grooved seams
   c. The folds are limited in size on a bar folder
   d. The folds are limited in size on a brake

2. What is the unique feature of the box and pan brake?
   a. It can bend sides when the opposite sides have already been bent.
   b. It can form small boxes made of lightweight metal.
   c. It can form wire and rod.
   d. All of the above

3. Which of the following shapes can be bent on a bending brake?
   a. single hem
   b. double hem
   c. radius bend
   d. all of the above

4. What is another name for the apron on the hand brake?
   a. frame
   b. jaw
   c. bending leaf
   d. lower jaw

5. On which side of the machine should you stand when operating the bending brake?
   a. right
   b. left
   c. either
   d. it depends on the size of the piece of metal being bent

6. Bar folders can be used:
   a. For bending lengths smaller than 10 inches
   b. For bending lengths from 20 - 42 inches
   c. For bending lengths longer than 5 feet
   d. For bending any length

7. Which part of the bar folder is used to make the bend?
   a. operating handle
   b. adjustable collar
   c. fingers
   d. folding blade

8. What should not be bent using a hand brake?
   a. wire
   b. rod
   c. material heavier than the capacity specified by the manufacturer
   d. all of the above

9. How many thicknesses of metal can you bend at one time with a box and pan brake?
   a. one
   b. two
   c. three
   d. it depends on the thickness

10. How is the tension adjusted on a hand brake?
   a. by adjusting the screw
   b. by turning the clamping handle
   c. by moving the top leaf
   d. none of the above

11. Which of the following can be used for forming edges and locks for seams?
   a. Bar folders
   b. Box and pan brakes
   c. Cornice brakes
   d. All of the above

12. Which of the following (is/are) correct for the use of box and pan brake?
   a. Be sure that the proper sequence of forming is determined and carried out.
   b. Insert the metal from the side of the machine, placing it between the lower and upper jaws.
   c. Operate the brake from the left-hand side of the machine.
   d. All of the above.

ANSWERS TO SAMPLE TEST QUESTIONS

1. C
2. A
3. D
4. C
5. A
6. B
7. D
8. D
9. A
10. A
11. D
12. A

FORMING AND ROLLING MACHINES

COMPETENCY:

Fabricate metal using rolling and forming machines.

OBJECTIVES:

1. List safety precautions to be practiced with rolling and forming machines.
2. Identify crimping and beading machines.
3. Outline the purpose of crimping and beading machines.
4. Explain the process of joining round pipe by crimping and beading.
5. Name the main parts of the slip roll forming machine.
6. Explain the purpose of rolling.
7. Explain how to set up the slip roll forming machine.
8. Describe the procedure for making round pipe with grooved seams using the slip-roll forming machine.
9. Consult machine operating manuals.
10. List the types of stakes and describe their use in forming.

LEARNING ACTIVITIES:

1. READ pages 30 - 32, and 37 - 39 in Short Course in Sheet Metal Shop Theory by Richard Budzik.

2. COMPLETE questions 1 - 10 on page 32 and questions 1-4 on page 37 of the text. CHECK your answers with another student or your instructor. REVIEW any questions you missed.

3. READ the Forming and Rolling information sheet.
   Note: A copy of the sheet is included in this guide and the apprentice guide.

4. WATCH your instructor demonstrate the use of stakes in forming, the slip roll forming machine, the crimping machine and the beading machine.

5. STUDY the Parts of the Slip-Roll, and Parts of the Rotary Machine information sheets.
   Note: A copy of the sheet is included in this guide and the apprentice guide. You may wish to create transparencies from the sheet for use with your lecture.

6. COMPLETE the Labs on forming and rolling assigned by your instructor.
   Note: Two labs are suggested in this guide and the apprentice guide. Use one of the suggested labs or

create your own.

7. Optional: VIEW the videotape, "Making a Five-Piece Elbow."
   Note: See resource section for ordering information.

APPLICATIONS:

Use the slip roll forming machine.
Use crimping and beading machines.
Use rolling machines.

EVALUATION/CHECK OUT:

1. Submit your lab results for evaluation.
2. Submit your Applications Checklist.
3. Demonstrate your knowledge of the objectives in a test situation.

LEARNING MATERIALS:

1. Copies of the text, Short Course in Sheet Metal Shop Theory by Richard Budzik. One copy per student.
2. Copies of a test on Forming and Rolling. Several sample test questions are included in this guide.

EQUIPMENT AND SUPPLIES:

Combination crimping and beading machine
Slip roll forming machine
Sheet metal forming stakes
Sheet metal stock
Sheet metal pipes

RESOURCES:

1. Audio-Visual Material:
   "Making a Five-Piece Elbow." This videotape shows the use of patterns and steps in laying out the elbow gores, types of snips and the squaring shear, as they are used in cutting the gores. Explains folding edges of the bar folder, the used of the slip-roll former, making the seams and turning and boring gore edges and the final assembly of the elbow.

   Available from Sterling Educational Films, 241 E. 34th Street, New York, New York, 10016. (212) 683-6300

2. Seminars:

Theo Polet, Sales Engineer, Biersach & Niedermeyer Co., 10245 North Enterprise Drive, Post Office Box 308, Mequon, WI 53092-4636. (414-242-2804)

Biersach & Niedermeyer offers a wide range of services such as shearing, rolling, forming, punching, welding, deburring and assembly of sheet metal. They work with mild steel, stainless steel and aluminum. Technological advances include CNC punching, CNC lasarcutting, CAD CAM engineering and a CNC coordinate measuring machine.

INFORMATION SHEET

FORMING AND ROLLING

FORMING MACHINES

The two types of forming machines used in the sheet metal shop are the plain forming machine and the slip-roll forming machine.

PLAIN FORMING MACHINE

The plain forming machine consists of three rollers through which flat sheet of metal are fed to be formed into cylindrical shapes. The two front rollers are driven either by a hand crank assembly or by an electric motor. The hand powered machine is used most often. The rear, or idler, roll does the actual forming of the cylinder. It is adjustable to accommodate different thicknesses of metal and the diameter of the piece to be formed.

SLIP-ROLL FORMING MACHINE

The slip-roll forming machine operates the same way as the plain forming machine. The difference is that the upper roll on the slip-roll machine can be released and swung away to facilitate removing the formed piece of metal. On both types of machines, the two front rolls act as feeding or gripping rolls while the rear roll gives the proper curvature to the work. The front rolls are adjusted by two screws located at either end of the machine. The rear roll is adjusted by two screws located at the rear of each housing. The grooves in the front and rear rolls are used for forming pieces with wired edges.

The slip-roll forming machine is used to form stove pipes, cans, and other cylindrical shapes.

CRIMPING

The making of the a wavy end on a piece of sheet meal is called crimping. It makes the end of a pipe smaller so it will fit into another pipe of the same dimension. This method eliminates the need of making one end of the pattern for the pipe smaller than the other. However, crimping can be used on light gage metal only. Crimping can also be used when turning large flanges on collars since it aids in stretching metal.

BEADING

Beads are formed on cylindrical objects to serve as stiffeners, reinforcement or ornamentation. The beading machine is a rotary machine equipped with special beading rolls. The standard shapes of beads are the single bead, ogee bead and triple bead.

COMBINATION CRIMPING AND BEADING MACHINES

If a piece of sheet metal is to be both crimped and beaded, this may be accomplished by using the combination crimping and beading machine.

FABRICATION LAB

CRIMPING, BEADING AND CONNECTING A ROUND PIPE

In this lab you will learn how to join round pipe by crimping and beading.

MATERIALS:
2 Round Pipes
Crimping Machine
Beading Machine
Three Sheet Metal Screws

SPECIFICATIONS:
Crimp and bead a round pipe and join it to another round pipe with sheet metal screws.

DIRECTIONS:
1. Take one pipe and crimp it and bead one end so that it will lap 1-1/2" into another pipe.

2. Join the crimped and beaded pipe to the other pipe with three sheet metal screws. Make sure the pipes are straight and the seams aligned before inserting the screws.

3. Turn in to your instructor.

FABRICATION LAB

MAKING A ROUND TANK

In this lab you will learn how to lay out a round tank with a double seam and gain skill in making wired edges, double seams and groove seams.

MATERIALS:
Sheet metal
Wire
Rolling Machine
Burring Machine

SPECIFICATIONS:
Lay out and make a 7" round tank, 4" high with a 1/4" wired edge, a 1/4" grooved seam, and 1/4" double seam.

DIRECTIONS:
1. Lay out the patterns for the tank shown below. Extreme accuracy is essential for the patterns in this project. Allow for all seams and edges.

2. Form and complete the wired edge.

3. Bend the edges for the 1/4" groove seam.

4. Roll the tank and the wired edge.

5. Complete the groove seam.

6. Turn the edge on the bottom with the burring machine.

7. On the bottom piece turn up the outside edge with the burring machine.

8. Connect the bottom to the main part.

9. Set down the seam and finish it.

10. Turn the completed projected in to your instructor.

Pattern for a Round Tank

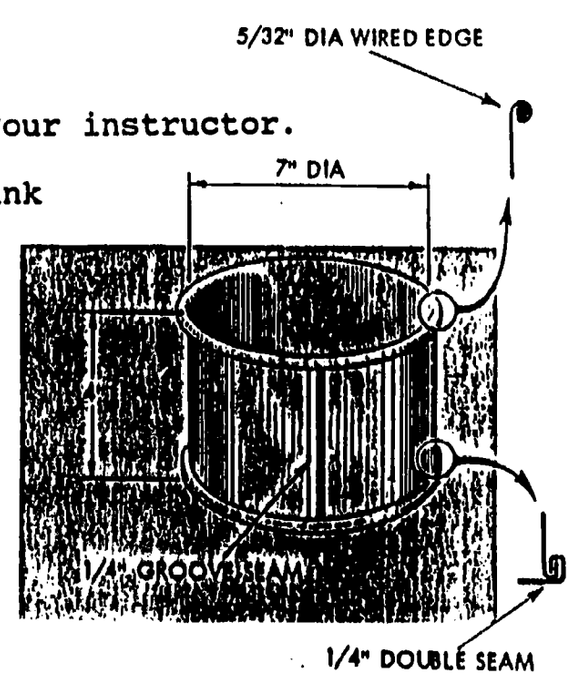

INFORMATION SHEET

PARTS OF THE SLIP-ROLL FORMING MACHINE

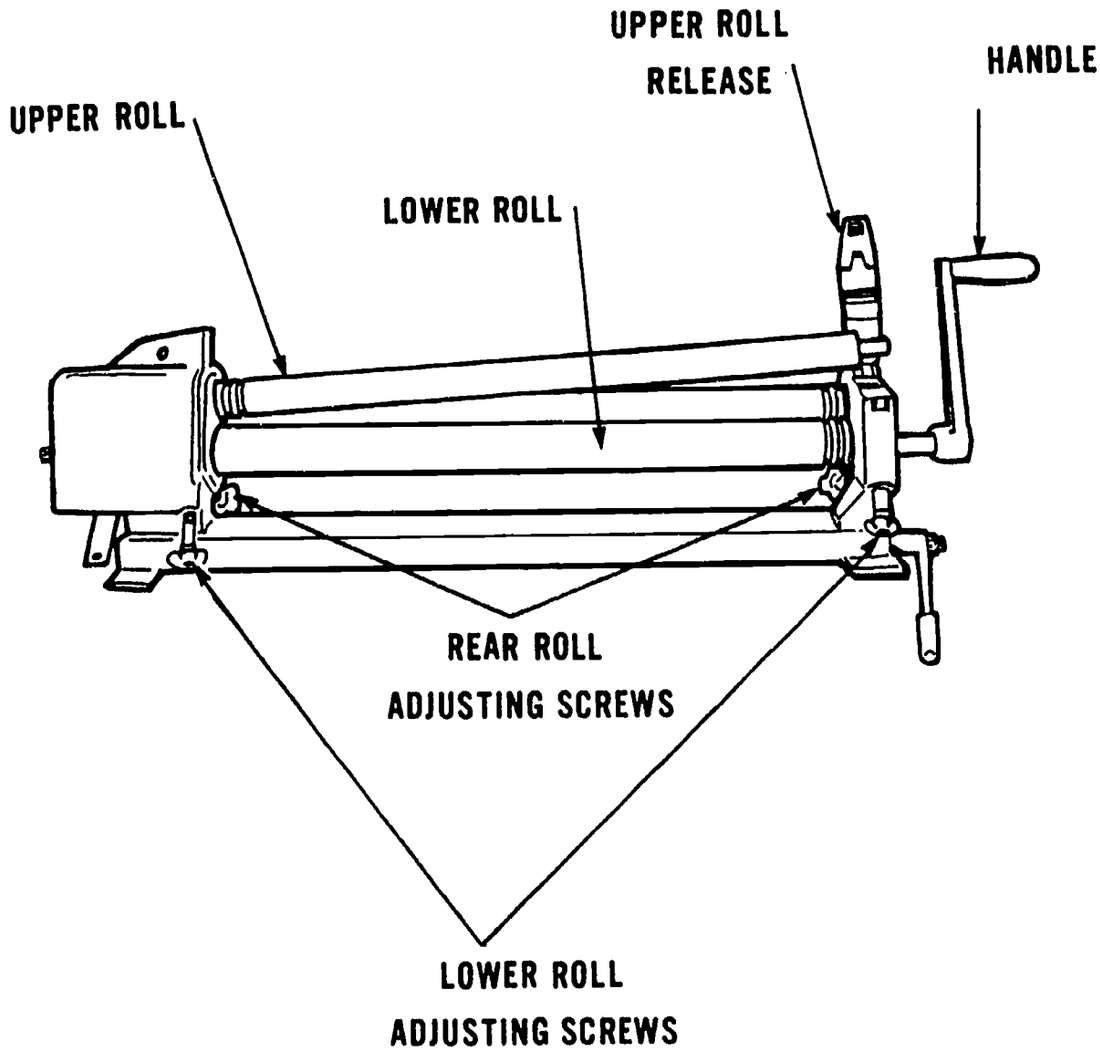

INFORMATION SHEET

PARTS OF THE ROTARY MACHINE

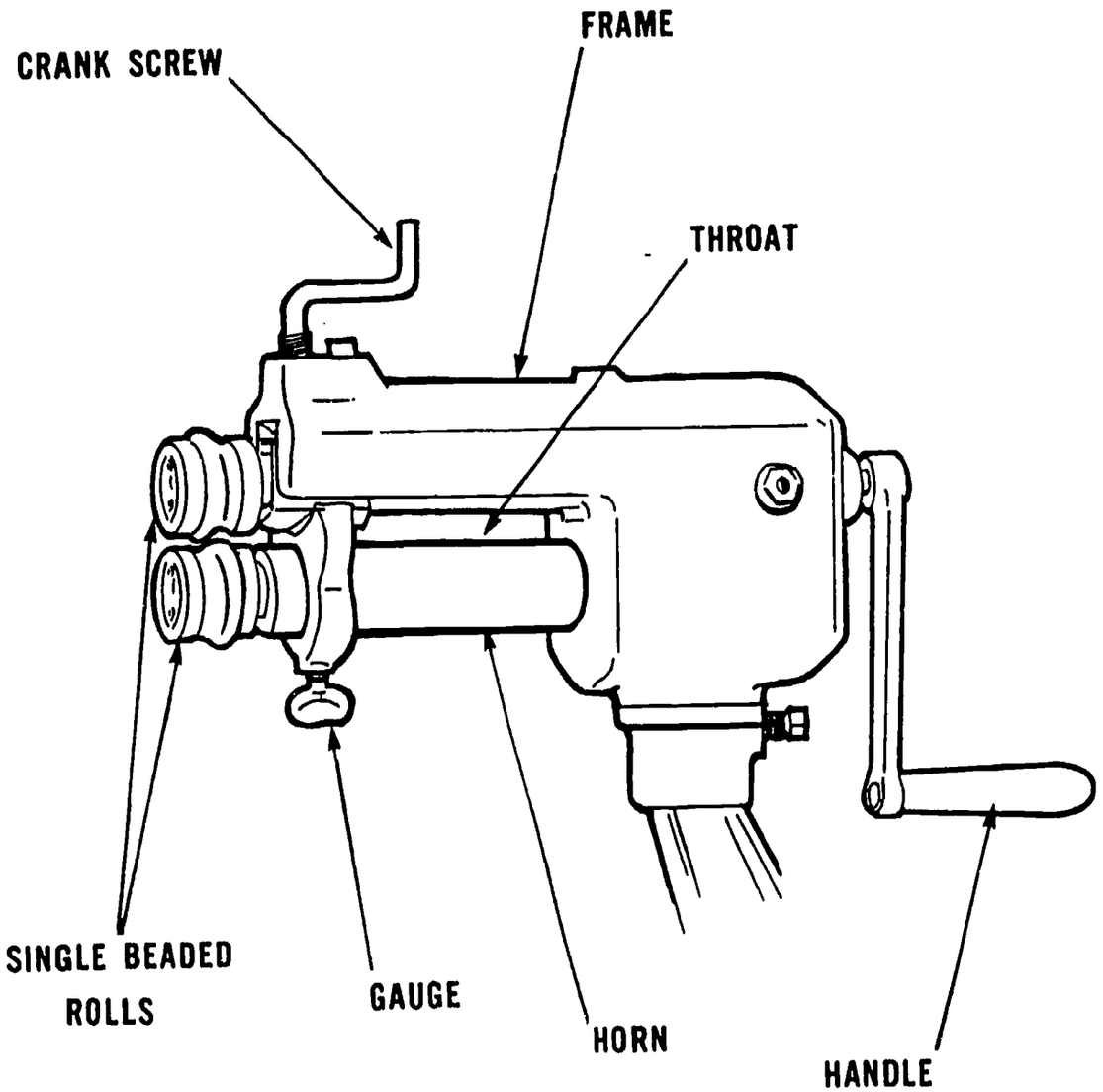

SAMPLE TEST QUESTIONS

FORMING AND ROLLING MACHINES

What are the six parts of the Slip-Roll Forming Machine?

1. _____

2. _____

3. _____

4. _____

5. _____

6. _____

What are two safety precautions to remember when using the Slip-Roll Forming Machine?

1. _____

2. _____

MULTIPLE CHOICE:

1. What is the difference between a plain former and a slip-roll former?
   a. The plain former cannot fold large pipe
   b. The slip-roll former is bigger
   c. The upper roll on the slip-roll former can be released and swung away
   d. The plain former can accommodate different thicknesses metal

2. How are the front rolls adjusted?
   a. They cannot be adjusted
   b. It is unnecessary to adjust the rolls
   c. By turning two screws located at either end of the machine
   d. By turning two screws located at the rear of the housing

3. The sheet to be formed is inserted with:
   a. Your left hand
   b. Your right hand
   c. either hand

4. The slip-roll forming machine is used to:
   a. Form metal into cylinders
   b. Form metal into curved shapes
   c. Form pipes
   d. All of the above

5. Why is it necessary to crimp one edge of a pipe?
   a. For ornamentation
   b. So it slips into the same size pipe
   c. So it can slip into a smaller pipe
   d. None of the above

6. Beading:
   a. Serves as stiffeners
   b. Serves as reinforcement
   c. Serves as ornamentation
   d. All of the above

7. To adjust the thickness of the metal you can use:
   a. The operating handle
   b. The lower front roll
   c. The adjusting screws
   d. The trigger release

8. To roll wired edges the _____ is used.
   a. Circular grooves
   b. Cylindrical grooves
   c. Circle grooves
   d. None of the above

9. If the curvature is not small enough:
   a. Raise the adjusting screws
   b. Lower the adjusting screws
   c. Turn the operating handle in the opposite direction
   d. Remove the housing

10. Which of the following hand forming tools should be used for forming small pipes and tubing?
   a. Candlemold stakes
   b. Beakhorn stakes
   c. Needlecase stakes
   d. Blowhorn stakes

ANSWERS TO SAMPLE TEST QUESTIONS

1. The parts of the slip-roll forming machine are:
   Operating handle
   Trigger release
   Rear roll
   Lower front roll
   circular grooves
   housing
   Adjusting screws
   Base
   Upper front roll
   Release handle

2. A. Keep fingers and loose clothing away from the rolls.
   B. Feed the metal into the rollers slowly and carefully so you remove your fingers in time.

Multiple Choice:

1. C
2. C
3. A
4. D
5. B
6. D
7. B
8. A
9. C
10. C

FASTENERS

- HARDWARE SELECTION
- SOLDERING AND SPOT WELDING
- SEAMS, EDGES, LOCKS AND CLIPS

HARDWARE SELECTION

COMPETENCY:

Select and use appropriate fastening hardware.

OBJECTIVES:

1. Identify the types of fasteners commonly used in the sheet metal trade: screws, bolts, washers, nuts and rivets.
2. Explain the appropriate uses for various fasteners.
3. Select fasteners for specific applications.
4. Identify fasteners by using standard grade markings.
5. Describe how to torque and tension fasteners.
6. Summarize the installation and removal procedures for fasteners.
7. Discuss the use of adhesives for fastening metals together.

LEARNING ACTIVITIES:

1. READ the Types of Fasteners information sheet.

2. READ the "Fastener Facts" booklet from Bowman Distributors.

   Note: This booklet is available free of charge from Bowman Distributors. Ordering information is located in the Resource section. Pat McHenry, an industry representative from Bowman Distributors, will bring enough of the booklets for your students if you request to have him speak to your class.

3. CREATE a display board of the various types of fasteners that are used in your shop. EXPLAIN to a group of your peers where, why or how they are used at your work setting. Label each type of fastener.

   Note: You may wish to assign apprentices a certain group of fasteners to display. Depending on the size of your class, you can do the presentation of the display boards with accompanying explanations in front of the entire class or in groups of 4-6.

4. STUDY the fasteners on display in your classroom. PARTICIPATE in a lecture/discussion on fasteners.

   Note: If you do Learning Activity #2, put the student's work on display. Otherwise create one of your own. Include as many types of fasteners as possible. See Resource section for information on where to obtain Rawl anchors.

Have the students examine them as they are discussed so they can physically see the characteristics of each type of fastener.

The display is also useful as a review before the test, or have apprentices identify fasteners from the display as part of a test.

5. OPTIONAL: VIEW the slide tape, "Fasteners."
   Note: See Resource section for ordering information.

6. ATTEND a lecture/discussion by an industry representative.
   Note: Pat McHenry from Bowman Distributors is a good choice for a speaker. See the Resource section for more information.

7. COMPLETE the Fastening Lab.
   Note: Several labs can be used at this point to give apprentices the opportunity to practice using fasteners and other hardware. Some ideas:
   - Lay out, cut, and fasten together a simple box with sheet metal rivets.
   - Lay out, cut, and fasten together a simple box with pop rivets.
   - Lay out, cut and fasten together two cylinders with mechanical and non mechanical fasteners.

8. COMPLETE the Fasteners assignment sheet.
   Note: A copy of the sheet is included in this guide and the apprentice guide.

APPLICATIONS:

1. Install and remove four types of fasteners. (Two mechanical fasteners, two non-mechanical fasteners.)
2. Use sheet metal rivets.
3. Use pop rivets.
4. Select the appropriate fastener for a job.

EVALUATION/CHECK OUT:

1. Submit your Fastener Lab results.
2. Submit your Display Board.
3. Submit your Applications Checklist.
4. Demonstrate your knowledge of the objectives in a test situation.
   Note: Various approaches may be used to test student knowledge of fasteners. The fastener display may be used to check students' ability to identify names and uses of various fasteners. Students may be asked to identify fasteners used in their shop. Or, a pencil and

paper test may be given.

EQUIPMENT:

Examples of:
- Different types of bolts and screws
- Carriage bolts
- Machine bolts
- Stove bolts
- Stud bolts
- Cap screws
- Machine screws
- Set screws
- Wood screws
- Self-tapping screws
- Washers
- Cotter pins
- Snap rings
- Keys
- Rivets
- Toggle bolts
- Expansion shields
- Studs and pins

LEARNING MATERIALS:

1. Copies of the "Fastener Facts" booklet from Bowman Distribution. See Resource section for ordering information. One copy per student.
2. Optional: Photocopies of a written test on Fasteners. Several sample test questions are included in this guide.

RESOURCES:

1. Audio-Visual Materials:

   A. "Threaded Fasteners" from Industrial Training Corporation. (800-253-4623) This slide/cassette program teaches participants how to identify, measure and use SAE and metric fasteners. Close-up photos and technical illustrations are used to identify a fastener's type, grade and material.

   B. "Fasteners" from FOS, John Deere Service Training, John Deere Road, Moline, IL 61265. This set of slides covers all types of mechanical fasteners. Each type of hardware is discussed--bolts, cap screws, nuts, screws, studs, pins, rivets, sealants, specialty fasteners, and more. Emphasis is on purpose, design, use, removal and installation.

C. "Bolting and Fastening" from ITC, 14616 Southlawn Lane, Box 6009, Rockville, MD, 20850. (800-638-3757) This package includes videotape, discussion guide, student workbook, and overhead transparencies. The program covers fastener performance, torque, the "turn of the nut" procedure, fastener designs, installing fasteners, lubricating fasteners, locking devices, and removing frozen fasteners.

D. "Machine Operations - Metalwork: Fastening Metals" from Northern Illinois University, Media Distribution Department, Altgeld Hall, Room 114, DeKalb, Illinois, 60115. 12 minutes. Order Number 5090044.

E. "Fastener Training Program" from National Fastener Distributors Association, (614) 237-0252. A detailed program that describes all manner of fasteners and explains their application. Available in VHS or slides. Includes teaching guide and student workbook.

2. Samples of Rawl anchors may be obtained by contacting Rawlplug Company, P.O. Box 26706, Milwaukee, WI, 53226. (414-466-2400).

3. Booklets and Periodical Articles:

A. "Fastener Facts" from Bowman Distribution, Barnes Group Inc., 5052 28th Avenue, Rockford, IL 61109. (815-398-5130) This booklet serves as a good text for the fastener portion of the apprentice training. It covers the following areas: identification of fastener grades by headmarks, reason for fastener failure, the importance of proper installation procedures, thread types, why you should always use the shortest possible bolt, effect of lubrication, the economics of fastening, vibration, and a glossary of fastener terms.

B. "Rawl Products" booklet 43-M available from The Rawlplug Company, P.O. Box 26706, Milwaukee, WI, 53226. (414-466-2400). The booklet gives a complete description of Rawl products and general information on using and installing them. The booklets may be ordered free of charge by sending a request to the above address on school letterhead. An industry representative is also available for class demonstrations, see "Seminars."

C. Various articles from the "Fastening and Joining" issue of Machine Design, November 13, 1979. Machine Design has given permission to reprint their articles as long as credit is given to them. You may also enlarge particular illustrations for overhead use. Again the credit must appear on the overhead.

4. Seminars:

A. Pat McHenry, District Sales Manager, Bowman Distribution. He is located in Delafield, WI. Business phone: (414) 646-8606. Home phone: (414) 646-2161.

He will bring copies of the "Fastener Facts" booklet upon request.

B. James Knuth, Sales, The Rawlplug Company, P.O. Box 26706, Milwaukee, WI, 53226. (414) 466-2400. He will bring along anchor samples and discuss why they fail and how to avoid it. He will provide Rawl Products booklets upon request.

INFORMATION SHEET

TYPES OF FASTENERS

TERMS AND DEFINITIONS

A. Mechanical Fasteners: All fasteners that can be hammered, screwed, or driven by hand or with hand tools.

B. Non-mechanical Fasteners: All fastening materials or processes that attach or join metal or plastic with heat or adhesives.

C. Locknut: Term applied to the outer of two nuts on a bolt when tightened together.

D. Peening: Spreading metal into a flat or rounded shape.

E. Nut: A small metal block which is drilled and threaded to a fit a bolt.

F. Handtight: A nut or bolt that has been tightened by hand and not with a wrench.

TYPES OF MECHANICAL FASTENERS

RIVETS	Rivets are a metal pin with a head on one end that is placed through holes in metal and peened into place. Rivets are made of several types of metals. Usually the rivet chosen should be the same metal as the piece it is used on. They vary in size and shape and should be selected and applied according to specifications.
Sheet Metal Rivet	A sheet metal rivet is a pin with a smooth shaft and a flat, round, or countersunk head; the headless and end of the rivet is inserted through two or more pieces of metal and a similar head is hammered or formed on it.
Pop Rivet	Pop rivets are designed to be driven with a rivet gun.
SCREWS	Machine screws are used in general assembly of parts and machine tools.

Cap	Used in assembly where a quality and finished appearance is required.
Set screws	Used in recessed or hidden locations such as holding pulleys on shafts.
Drive	Permanent type screws that are driven into a drilled or punched hole. Used for attaching materials to metal and used especially when specifications call for a fastener that cannot be easily removed.
P-K tapit	A screw that is driven with a hex socket driver; it forms its own hole and has a serrated washer next to the head that serves as a built-in brake to keep it from stripping the hole. It is used mostly on light gauge metal and is one of the most frequently used screws used in sheet metal work.
Thread Forming	A screw that cuts its own thread. Requires that a starter hole be drilled for the tip to fit into. Comes in varied sizes and head shapes.
BOLTS	Bolts are metal threaded fasteners which may be used in threaded holes or with a nut.
Stove	Used to fasten light metal parts.
Carriage	A round headed bolt with a square neck which keeps the bolt from turning in the hole when the nut is tightened. An all-purpose bolt used frequently in sheet metal.
Hex head	A bolt used on larger projects. The head can facilitate a wrench so the bolt can be tightened very securely.
NUTS	Used with bolts when parts do not have threaded holes.
Hex nut	An all-purpose nut used in general sheet metal work.
Washer-base nut	A nut with a washer attached. Available with or without locking features. Helps eliminate losing washers.
Hex cap	Used in assembly where a quality and finished appearance is required.

Jam	Used to lock a standard nut in place.
Castle or slotted	Used with a bolt that has a hole through the threads so that a cotter pin may be used to lock the nut in place.
Wing	Used when the nut must be tightened and loosened by hand.
Acorn	Used to protect the threaded end of a bolt.
WASHERS	Washers are used to spread the clamping pressure evenly over a larger area and to prevent damaging the surface of the work piece.
Flat	All purpose washer used both as a spacer and to modify oversize holes.
Lock	Prevents the bolt from loosening during vibration.
Split lock	All-purpose washer with added holding strength. Most frequently used in general purpose sheet metal work.
COTTER PINS	Also known as retaining pins. Placed in a drilled hole in a shaft to keep a part in place.
SNAP RINGS	Used in internal and external grooves.
KEYS	Used to hold gears or pulleys on shafts.

TYPES OF NON-MECHANICAL FASTENERS

RESISTANCE SPOT WELDER	A machine that burns or melts two pieces of metal together without any added materials.
GLUES, EPOXIES SOLVENTS	Adhesives used to secure duct liner, to secure metal to walls, to secure seams in plastic, and similar applications.
SOLDERING	Process by which metal is joined together by melting other metal into a seam or joint.

ASSIGNMENT SHEET

FASTENERS

---

1. Define the following and give an example of each.

Mechanical Fastener:

Non-mechanical Fastener:

2. Explain the terms ASTM and SAE and what their responsibilities are.

3. Draw a sketch showing the following fastener SAE marks:

Grade 5 Bolt Head

Grade 1 Bolt Head

Grade 8 Bolt Head

4. What is the primary function of a washer?

5. What type of bolt is used to fasten light metal parts?

6. What type of nut can be loosened or tightened by hand?

7. Name a screw that is used in a recessed or hidden location.

8. What type of washer is used to modify oversized holes?

9. What is the purpose of a cotter pin?

10. What is the purpose of keys?

11. How do pop rivets differ from sheet metal rivets?

12. Name three types of non-mechanical fasteners.

13. How are adhesives used in sheet metal?

14. How do torque and tension interact in fastener tightening?

15. List two important factors in fastener tightening.

16. Why is tensioning more important than torqueing?

17. Explain what happens to an installation when a nut is used over a second and third time.

ANSWERS TO THE FASTENER ASSIGNMENT SHEET

1. Mechanical fasteners are any type of fastener that can be hammered, screwed or driven by hand or with hand tools.
   Non-mechanical fasteners include all fastening materials or processes that attach or join metal or plastic with heat or adhesives.

2. ASTM: American Society for Testing Materials. SAE: Society of Automotive Engineers. Their responsibility is to establish fastener specifications.

3. Drawing.

4. Washers are used to spread the clamping pressure evenly over a larger area and to prevent damaging the surface of the work piece.

5. A stove bolt.

6. A wing nut.

7. A set screw.

8. A flat washer.

9. A cotter pin is placed in a drilled hole in a shaft to keep a part in place.

10. A key is used to hold gears or pulleys on shafts.

11. Pop rivets must be driven with a rivet gun.

12. Non-mechanical fasteners include: resistance spot welding, glues, epoxies, solvents, and soldering.

13. Adhesives are used to secure duct liner, to secure metal to walls, to secure seams in plastic and other similar applications.

14. Torque is a round about way of reaching the proper tension.

15. The strength of the fastener material and the degree to which it is fastened are two important factors to consider.

16. Because tensioning eliminates friction.

17. Due to distortion of the nut on the initial installation, upon reuse too much torque is consumed by friction, resulting in a loose application.

SAMPLE TEST QUESTIONS

FASTENERS

Note: Use the following questions as a guide to prepare a test for your students.

MATCHING:

1. Match the terms associated with fasteners to the correct definition by placing the number of each term on the right in the correct blank on the left.

_____	a. A nut or bolt that has been tightened by hand.	1. Cotter pin
_____	b. A small metal block which is drilled and threaded to fit a bolt.	2. Locknut
_____	c. Spreading metal into a flat or round shape.	3. Hand tight
_____	d. Term applied to the outer of two nuts on a bolt when tightened together.	4. Peening
_____	e. A wire-like pin which is used with slotted nuts to prevent them from turning on the shaft.	5. Nut

2. Match the term on the right with the correct phrase on the left by writing the number of each term in the correct blank.

_____	a. Type of bolt used to fasten light metal parts.	1. Carriage
_____	b. Bolt used on larger projects. The head can facilitate a wrench.	2. Castle
_____	c. A metal pin with a head on one end that is placed through a hole and peened into place.	3. Snap Ring
_____	d. A round-headed bolt with a square neck which keeps the bolt from turning in a hole as the nut is tightened.	4. Cotter
_____	e. A nut used with a bolt that has a hole through the threads so that a cotter pin may be used to lock the nut in place.	5. Stove
_____	f. A washer which prevents a bolt from loosening during vibration.	6. Hex cap
_____	h. Used in internal and external grooves.	7. Lock
		8. Hex head
		9. Drive
		10. Rivet

_____ i. Permanent type screws that are driven into a drilled or punched hole.

_____ j. Type of screw used in assembly where a quality and finished appearance is desired.

_____ k. A nut which may be loosened or tightened by hand

_____ l. A nut used to protect the threaded end of a bolt.

_____ m. A screw used in a recessed or hidden location.

_____ n. Used to hold gears and pulleys securely on shafts.

_____ o. A screw that forms its own hole and has a washer next to the head that serves as a built-in brake.

11. Wing

12. Set

13. Acorn

14. key

15. P-K tapit

MULTIPLE CHOICE:

1. Which of the following are examples of fastening operations?
   a. Bolting metal to wood
   b. Riveting metal to wood
   c. Welding metal to metal
   d. All of the above

2. Which of the following are means for classifying nuts and bolts?
   a. By pitch
   b. By length
   c. By diameter of the body
   d. All of the above

3. A class 1 fit between bolt and nut refers to:
   a. The loosest fit between threads
   b. The closest fit between threads
   c. Neither loose nor close fit between threads
   d. An internal threading used on a nut.

4. Which of the following are commonly used to fasten wood to metal?
   a. Stove bolts
   b. Carriage bolts
   c. Machine bolts
   d. All of the above

5. Which of the following are true statements with reference to set screws?
   a. They are made with square heads or are headless
   b. They are used to hold pulleys or collars onto shafts or electric motors
   c. They have a flat or cone point for gripping
   d. All of the above

6. Which of the following are used for attaching machines to a floor?
   a. Lag screws
   b. Machine screws
   c. Machine bolts
   d. Cap screws

7. The size of a nut is determined by:
   a. Its diameter
   b. The diameter of the bolt it is to fit on
   c. The size of the wrench required to tighten it
   d. All of the above

TRUE OR FALSE:

_____ 1. The heads of flat-head bolts and screws are included in their measurement.

_____ 2. Rivets come in several different sizes and should be selected and applied according to specifications.

_____ 3. Rivets are made from many different types of metal, but brass rivets are the best, especially with aluminum.

_____ 4. Rivets are self-drilling fasteners.

_____ 5. The advantage of the hollow-wall screw anchor is that fixtures can be removed without removing the anchor.

ANSWERS TO SAMPLE TEST QUESTIONS

Matching:

1. a. 3
   b. 5
   c. 4
   d. 2
   e. 1

2. a. 5
   b. 8
   c. 10
   d. 1
   e. 2
   f. 7
   g. 4
   h. 3
   i. 9
   j. 6
   k. 11
   l. 13
   m. 12
   n. 14
   o. 15

Multiple Choice:

1. D
2. D
3. A
4. B
5. D
6. A
7. B

Trur or False:

1. T
2. T
3. F
4. F
5. T

SOLDERING AND SPOT WELDING

COMPETENCY:

Solder and spot weld metals.

OBJECTIVES:

1. Summarize safety rules to be observed in soldering and spot welding operations.
2. List the uses of soldering in sheet metal work.
3. List the characteristics of solder and flux.
4. Discuss solder techniques.
5. List rules for the proper maintenance of soldering coppers.
6. Use soldering copper.
7. Discuss guidelines for soldering with various metals.
8. Identify materials solder consists of.
9. List the three items needed to join two pieces of metal by soldering.
10. List the three reasons for using flux.
11. Summarize the steps in tinning a soldering iron.
12. Discuss principles of resistance spot welding.
13. Adjust working elements on a resistance spot welder.
14. State major points of resistance in a spot welding application.
15. Explain relationships among time, current and pressure in resistance spot welding.
16. Identify appropriate tip for job.
17. Identify guidelines for spot welding on various types of steel.

LEARNING ACTIVITIES:

1. READ pages 49-51 in the Short Course in Metal Shop Theory by Richard Budzik.

2. COMPLETE the questions at the end of the chapter in the text. Questions 1-13 on page 51.

3. READ and STUDY the information sheet Soldering and Resistance Welding Terms and Definitions.
   Note: A copy of the sheet is included in this guide and the apprentice guide.

4. READ and STUDY the information sheet on Soldering Sheet Metal.
   Note: A copy of the sheet is included in this guide and the apprentice guide.

5. OBSERVE a demonstration from your instructor on the soldering process.
   Note: Provide an opportunity for your students to practice the soldering process in pairs.

6. STUDY the information sheet titled Safety Rules for Working with Spot Welders.
   Note: A copy of the sheet is included in this guide and the apprentice guide.

7. READ the information sheet on Spot Welding.
   Note: A copy of the sheet is included in this guide and the apprentice guide.

8. READ and STUDY the information sheet on the Guidelines for Spot Welding Various Materials.
   Note: A copy of the sheet is included in this guide and the apprentice guide.

9. WATCH your instructor demonstrate the proper technique of spot welding on sheet metal.
   Note: It might be helpful to point out common errors people make when spot welding that can contribute to poor welds.

10. COMPLETE the Soldering Assignment Sheet.
   Note: A copy of the sheet is included in this guide and the apprentice guide.

11. CREATE samples of well made and poorly made seams or joints by the soft soldering method. Mount them on a display board and label them to indicate what constitutes a good solder joint and a poorly made joint.

12. DISPLAY samples of commercially made products assembled by the soft solder technique. Arrange them in such a way to permit the solder seams to be seen and compared.

13. PARTICIPATE in class discussion and lecture on soldering and spot welding.

14. OPTIONAL: VIEW videotapes as assigned by instructor.
   Note: Several videotapes are listed in the Resource section.

APPLICATIONS:

1. Clean and shape a soldering copper.
2. Tin a soldering copper.
3. Tack solder to hold two pieces in a selected position.
4. Solder a lap seam in the flat position.
5. Solder a vertical seam.
6. Prepare and solder a workpiece of aluminum alloy.
7. Adjust the tong on a resistance spot welder.

8. Spot weld two pieces of sheet metal.
9. Clean spot welding tips.

EVALUATION/CHECK OUT:

1. Submit your Soldering Assignment Sheet.
2. Demonstrate your understanding of the objectives in a test situation.
   Note: Several sample test questions are included in this guide.

EQUIPMENT:

Materials for soldering demonstration
Materials for spot welding demonstration
Samples of wire or strip solder
Samples of seams to be formed during the class session
Samples of soldering flux
Samples of soldering irons and tips
Suitable backing material
Appropriate cleaning materials

LEARNING MATERIALS:

1. Copies of the text, Short Course in Sheet Metal Shop Theory by Richard Budzik.
2. Copies of a test on Soldering and Spot Welding. Several sample test questions are included in this guide.

RESOURCES:

1. Audio-Visual Material:
   A. "Soldering" a film from The Metalwork - Hand Tools Series. The film is produced by MORLAT and distributed by Sterling Educational Films, 241 E. 34th Street, New York, NY 10016. (212-683-6300) This film is 13 minutes long.

   This film describes soldering equipment and techniques-tinning an iron, tinning metal, soldering seams and hand soldering.

   B. "Soldering and Brazing Copper Tubing" a film from Marshall Maintenance Training Program, 1125 E. St. Charles Road, Lombard, IL 60148. (312-530-0744)

   This film shows how to produce good joinings, using soft solder as well as hard solder in joining copper tubing and capillary fittings.

C. "Soldering Demonstration" a videotape from Shawnee Mission, Kansas. RMI Media Productions, District One Technical Institute, Eau Claire, WI. This video is available at Moraine Park Technical College, Fond du Lac, WI 54935.
This videotape demonstrates soldering techniques.

2. Handbooks:
A. "Soldering of Electronic Products." This handbook, published by Lead Industries Association, INC., gives information on solderability testing, solderability of various coatings, soldering fluxes, removal of flux residues, solder alloys and methods of soldering.

Available from Lead Industries Association, INC., 292 Madison Avenue, New York, N.Y. 10017. 212-578-4750.

B. "Welding of Stainless Steels and Other Joining Methods." This handbook, published by Committee of Stainless Steel Products, American Iron and Steel Institute, includes information on spot welding and soft soldering. It is part of the "Designers' Handbook Series."

Available from J&L Specialty Products Corporation, One PPG Place, P.O. Box 3373, Pittsburgh, PA 15230-3373. 1-800-553-9235. Contact Jack Pearce.

C. "Soldering Technology-a decade of developments." This handbook, published by International Tin Research Institute, includes all areas of the soldering process. It is a very useful handbook and easy to read.

Available from Tin Research Institute INC., 1353 Perry Street, Columbus, Ohio 43201-2693. 614-424-6200.
Note: A list of other publications and videos offered by the Tin Research Institute, INC. can be found at the end of this module.
D. "Soldering Handbook", written by B. M. Allen and published by Drake Publishers, INC., is a practical manual for industry and the laboratory. It includes the following information: making a joint, choosing methods and materials, and various reference tables.

Available from Moraine Park Technical Institute, 805 East Johnson Street, Fond du Lac, WI 54935.

3. Seminars:
C. Van Dyke from Lucas-Milhaupt, Inc., located in Cudahay, WI, is willing to do seminars for apprentices on the process of soldering and silver brazing. To reserve a date, call C. Van Dyke approximately four weeks in advance at 414-769-6000. The program can be tailored to the individual needs of the class.

INFORMATION SHEET

SOLDERING AND RESISTANCE WELDING TERMS AND DEFINITIONS

ACID SWAB	A small brush used to transfer acid from a container to a seam.
SAL AMONIAC	A white chrystalline form of ammonium chloride used as a cleaning agent in soldering; available in block or powder form.
FLUX	A substance used to help metal fuse together by preventing oxidation.
ROSIN	A flux made from distilled crude turpentine or chemically treated pine stumps.
NUGGET	The area formed at the exact spot where two metals are fused together in resistance spot welding.
WELDMENT	The total thickness of any two metals being spot welded.
TONGS	Hollow extension arms that extend horizontally from a resistance spot welder to hold the electrode tips in place, to conduct current, and to supply circulating water to the electrode tips.
ELECTRODE TIPS	Tapered devices with flat-surfaced points extending vertically from the tongs to conduct current to the exact spot to be welded.
INTERFACE	The point in AC circuits expressed in kilovolts.
SHUNT CURRENT	A diversion or feedback of current caused by locating spot welds too close together or produced by oxidized materials improperly cleaned.
KVA RATING	The power in AC circuits expressed in kilovolts.

INFORMATION SHEET

SOLDERING SHEET METAL

Soldering may be defined as a metal joining method using a filler metal (solder) which has a melting point or range below 800 degrees F. The base metal is not melted during joining. Sheet metal soldering today is practically a lost art and has ben largely replaced by welding in many shops, chiefly because soldered joints have relatively low joint strength. However, in spite of this limitation, soldering does have some important practical and economic advantages in sealing, filing, and making low-strength joints in metals up to about .050 inch (18 gauge) in thickness.

Three things are needed to solder:

1. Heat source-brings metals to soldering temperatures so solder can melt and flow into the joint.
2. Flux - allows molten solder to react with and spread over the base metal surfaces.
3. Solder - bonds with the base metal surfaces. The bond depends on chemical alloying and physical adhesion of the solder with the metal surface.

Soldering irons are sometimes referred to as soldering coppers. The use of a soldering iron is to convey heat from the fire to the place to be soldered. Copper is a good conductor of heat as it absorbs heat rapidly.

Characteristics of soldering coppers:

1. Soldering coppers are made of solid copper tapered on one end and drilled and tapped on the other end so a steel shank can be screwed in to hold a handle.
2. Soldering coppers are rated in pounds per pair and stamped so the weight can be identified.
3. Soldering coppers are cut from square copper but beveled into an octagon shape at the time of manufacture to form more convenient working edges.
4. Smaller coppers are traditionally used for lighter weight metals and larger coppers are used for heavier weight metals.
5. Coppers can be tapered to match job requirements.

Guidelines for keeping soldering coppers clean:

1. If a copper is not cleaned frequently, flux and impurities will form a scale on the tip of the copper.
2. When scale accumulates on a copper, it serves to

insulate the copper and prevent heat from transferring from the copper to metal.

3. Coppers can be cleaned while soldering is being done by dipping the tip of the copper into a prepared solution of sal amoniac and water.
4. On job site work where sal amoniac solution is not available, a steel brush can be used to clean the residue off a copper tip each time it is removed from the furnace.

Steps in properly maintaining soldering coppers:

1.	Forging	This involves heating a copper in a furnace until the copper is cherry red, then filing off all the scale on the copper with a coarse file.
2.	Drawing	This involves placing the heated copper on an anvil and hammering the copper until it is drawn back to its original shape.
3.	Filing	This involves placing the heated copper in a vise and dressing the corners of the point with a fine file.
4.	Tinning	This involves heating the copper until it is cherry red, placing the tip on a block of sal amoniac, and adding small amounts of solder while rubbing the copper on the block of sal amoniac, then turning the copper until all sides are tinned.

Soldering techniques and their processes:

1.	Skimming	Coating one edge of a joint with a thin coat of solder.
2.	Tacking	The process of tacking a seam in several places so it will hold together while the seam is being properly soldered.
3.	Sweating	The process of applying a coating of solder to each surface to be joined together, placing the soldered surfaces together, then laying the hot copper on top of the seam to fuse the surfaces together and leave no excess solder showing on the surface.

Other metals and guidelines for soldering:

1.	Lead	Because this metal oxides quickly, the seam must be scraped with a pocket knife; a rosin flux should be used, and the copper should be a bit colder than a copper used for soldering galvanized.
2.	Copper	Should never be soldered with raw acid;

		it may be cleaned with raw acid and immediately wiped off, and a rosin flux should be used.
3.	Stainless	Should be soldered with zinc chloride or a specially designed soldering flux.
4.	Brass	May be cleaned with raw acid and immediately wiped off; should soldered with zinc chloride.
5.	Tin plate	Is already coated with tin or lead; can easily be soldered with rosin flux.
6.	Tin	Tin-lead alloys containing less than 10% of tin are both weak and brittle; the alloy containing 5% of tin is greatly improved in both strength and wetting power by the addition of 1.5% silver.
7.	Lead	Pure rosin can be used on workpieces of lead.

INFORMATION SHEET

SAFETY RULES FOR WORKING WITH SPOT WELDERS

1. Wear safety glasses or a face shield for all spot welding activity to avoid metal or oxides that are expelled from the joint.

2. Make sure the work area is properly ventilated; zinc and lead coatings give off fumes that can be toxic and cause illness.

3. Wear a long sleeve shirt and a face shield when working around vaporized zinc; when the zinc condenses to a solid it forms fishhook-shaped particles that imbed themselves in body tissue and cause annoying irritation.

4. Turn the spot welder off before making adjustments.

5. Never open the side panel on a spot welder; the high voltage elements inside are extremely dangerous.

6. Always turn the water off when finished with spot welding activity.

7. Never wear rings, watches, or jewelry when operating a resistance spot welder.

INFORMATION SHEET

SPOT WELDING

Spot welding is probably the most commonly used type of resistance welding. Resistance spot welding is a rapid means of temporarily or permanently bonding metal surfaces. The material to be joined is placed between two electrodes, pressure is applied, and a quick shot of electricity is sent from one electrode through the material to the other electrode.

There are three stages in making a spot weld:

1. The electrodes are brought together against the metal and pressure applied before the current is turned on. To make a good spot weld it is necessary to have close control of the time the current is flowing; time is manually set on spot welders and is the only controllable variable in most spot welding.
2. The current is turned on momentarily. Alternating current is normally used for resistance spot welding, and most procedures are based on a 60-cycle time which is equal to one second.
3. The current is turned off, but the pressure continued. This is called the hold time. The hold time forges the metal while it is cooling. The primary purpose of pressure is to hold the parts to be welded in close contact at the joint interface and provide continuity for current flow.

The relationship of time, current, and pressure help create the heat in the weld. Time helps determine both size and shape of the weld nugget. The time that current flows into the joint is determined by the thickness and type of material, amount of current flowing and the cross-sectional area of the welding tip contact surfaces. The current flows through the tongs and electrode tips as they exert pressure needed to hold the parts to be welded.

Heat balance is the condition of spot welding in which the fusion zones of the metals being joined are subject to equal heat and pressure. When the metals are the same kind and thickness, and the tips are the same size, there is usually no problem with heat balance. Problems with heat balance can occur when joining dissimilar metals, especially when joining copper and steel. With dissimilar metals, electrodes and tips have to be sized according to characteristics of the metals being used.

Regular spot welding usually leaves slight depressions on the metal which are often undesirable on the "show side" of a finished product. These depressions are minimized by the use of larger-sized electrode tips on the show side.

Spot welders are made for both direct and alternating current. The amount of current used is very important. Too little current produces only a light tack which gives insufficient strength. Too much current causes burned welds.

Spot welds may be made one at a time or several welds may be completed at one time, depending on the number of electrodes used. To dissipate the heat and cool the weld as quickly as possible the electrodes are generally water-cooled.

The following list includes the major points of resistance in a spot welding application:

1. The contact point between the top electrode and the top workpiece.
2. The top workpiece.
3. The interface of the top and bottom workpiece.
4. The bottom workpiece.
5. The contact point between the bottom electrode and the bottom workpiece.
6. Resistance of electrode tips.

Special considerations need to be remembered when working with spot welder tips:

1. Tips should be cleaned often with a tip cleaner only after the machine has been turned off.
2. Pressure between the tips should be checked with the following procedure.
   a. Close the tongs.
   b. If there is too much pressure, the top tip will try to slide over to one side of the workpiece.
   c. If the tips don't quite touch, there will not be enough pressure to make a good weld.
3. Always remember that the amount of pressure on the tips has an important effect on the amount of weld current that flows through the joint.
4. Always select the correct tip for the job.

Shunt currents are a feedback of current caused by locating spot welds too close together. Shunt currents flowing through a previous spot weld can take current away from a second weld to be made, especially if two spot welds are too close together. They can occur with all metals, but they are more common with metals, such as aluminum, which has low electrical resistance. Standard procedures for setting up

spot welding activity should reflect the KVA rating of the machine, tong size, voltage, and material thickness.

Factors that can contribute to poor welds:

1. Dirty electrode tips.
2. Convex or concave electrode surfaces.
3. Improper selection of electrode tip size.
4. Misalignment of electrodes.
5. Improper electrode pressure.
6. Heat imbalance due to joining two dissimilar materials.
7. Improper amount of current used.

INFORMATION SHEET

GUIDELINES FOR SPOT WELDING VARIOUS MATERIALS

1. Spot welding low-carbon steel.

   a. All mild or low-carbon steels can be readily spot welded with proper equipment and correct procedure.
   b. Carbon steels have a tendency to develop hard, brittle welds as the carbon increases if proper post-heating procedures are not used.

2. Spot welding low-alloy and medium-carbon steel.

   a. The resistance factor for low-alloy and medium-carbon steels is higher than the resistance factor for low carbon steels.
   b. The higher resistance factor makes current requirements slightly lower.
   c. Time and temperature are more critical because of metallurgical changes, and higher pressures and longer welding times are required.

3. Spot welding stainless steel.

   a. Chrome-nickle alloys have a very high resistance factor and can be readily spot welded.
   b. The longer the weldment is held at critical temperature, the greater the possibility of carbide precipitation.

4. Spot welding dip-coated or plated steel.

   a. Dip-coating is less expensive than electro-plating, and metals dip-coated with zinc or galvanized are therefore more frequently used.
   b. In dip-coating, the zinc coating is frequently uneven, so this means the resistance factor will vary from weld to weld.
   c. It is difficult to set specific guideline for dip-coated and plated steels; each job will require individual adjustments.

5. Spot welding aluminum and aluminum alloys.

   a. Surface cleaning is critical for aluminum materials because surface resistance becomes a determining factor as to whether or not a resistance weld can be made.
   b. Surface resistance on aluminum is much less immediately after chemical cleaning, so spot welding should be performed as soon as possible after the aluminum has been cleaned.

c. Higher welding currents and greater electrode force are necessary when spot welding aluminum and aluminum alloys.

ASSIGNMENT SHEET

SOLDERING

TRUE OR FALSE:

1. Soldering is a metal joint method using a filler alloy which melts and flows above 800 degrees and when molten, the solder reacts with and bonds to the base metal which does not melt.

2. Sheet metal, strip or wire up to about .050 inch can be soldered, thicker sections are usually welded for best results.

3. Stainless steel can be soldered to each other and can also be soldered to other metals and materials.

4. An advantage to soldering as compared to brazing or welding is: less distortion is likely, especially in thin gauges because of lower temperature used.

5. Because of low joint strength, soldering is usually limited to sealing and where joint strength is important, joints must be mechanically reinforced.

6. The flux can cut through layers of grease, oil, surface dirt or rust, so the metal parts don't necessarily have to be well cleaned before the flux can do its work.

7. Never use a flux stronger than necessary for hard to solder metals.

8. A soldered joint is weakest, when the solder between the joined parts is as thin as possible.

9. A poor bond in soldering may occur from joint clearance that is too large or too small.

10. Stainless steel as compared to other solderable metals, requires different soldering practices because when heat is applied to the stainless, it will react in different ways.

11. Tinning the metal surfaces before soldering is a good recommended procedure and soldering of tinned parts is called sweat soldering.

12. Test methods are used to determine solderability.

13. Oxide scale on a dirty or scaled point acts as an insulator and prevents efficient transfer of heat to the work.

14. On tinned surfaces, a liquid corrosive flux is never used.

FILL IN THE BLANK:

1. Sheet metal soldering today is practically a lost art and has been largely replaced by _____ in many shops, chiefly because soldered joints have relatively low joint strength.

2. All metals have a thin _____ film on their surfaces, although you cannot always see it and the flux removes this film and allows the molten solder to wet or bond to the metal.

3. When soldering a joint the molten solder penetrates or is drawn into the joint by a combination of wetting and spreading action of the solder, together with _____ action - much like a blotter soaking up ink.

4. _____ corrosion takes place when two unlike metals in contact with each other form and electrical circuit in the presence of an electrolyte.

5. Where metal is subject to heating and cooling, especially on long lengths, _____ joints are used.

6. It is always a good soldering practice to remove the _____ used after soldering from the joint being soldered.

7. Non-activated rosin fluxes consist of rosin dissolved in a solvent such as _____ or _____.

8. A _____ test should be made to be certain if the soldered bond is strong.

9. The more _____ in the solder, the less is the rate of darkening in the atmosphere and the better the corrosion resistance and color match to sheet metal.

10. It is always a good practice to _____ the surface of metals with an abrasive cloth or stainless wire brush before soldering.

11. On lap seams of any length, it is good practice to tack solder the joint every _____ or _____ before beginning soldering.

12. When soldering _____ seams, you can only apply a limited amount of heat at a time; otherwise the solder will run down the joint.

13. When soldering dissimilar metals, _____ and _____ have to be sized according to characteristics of the metals being used.

14. Soldering coppers are made of solid copper _____ at one end and drilled and _____ on the other.

15. The four steps in properly maintaining soldering coopers are:

1. _____

2. _____

3. _____

4. _____

SAMPLE TEST QUESTIONS

SOLDERING AND SPOT WELDING

Note: Use the following questions to create a test on soldering and spot welding.

Matching:

_____1.	Hollow extension arms that extend horizontally from a resistance spot welder to hold the electrode tips in place, to conduct current, and to supply circulating water to the electrode tips.	a.	Nugget
		b.	Shunt current
		c.	Rosin
		d.	Interface
_____2.	The point or points of contact formed when two materials are placed together.	e.	Acid swab
		f.	Tongs
_____3.	A small brush used to transfer acid from a container to a seam.	g.	Sal amoniac
		h.	Electrode tips
_____4.	A flux made from distilled crude turpentine or chemically treated pine stumps.	i.	Flux
		j.	Weldment
_____5.	The power in AC circuits expressed in kilovolts amperes.	k.	KVA rating
_____6.	The area formed at the exact spot where two metals are fused together in resistance spot welding.		
_____7.	A white chrystalline form of ammonium chloride used as a cleaning agent in soldering; available in block or powder form.		
_____8.	Tapered devices with flat-surfaced points extending vertically from the tongs to conduct current to the exact spot to be welding.		
_____9.	A substance used to help metals fuse together by preventing oxidation.		

_____10. The total thickness of any two metals being spot welded.

_____11. A diversion or feedback of current caused by locating spot welds too close together or produced by oxidized materials improperly cleaned.

Fill in the blank:

1. Solder is made by melting tin and lead together, and is classified by the _____ _____ of tin to lead.

2. Solder is further classified as _____ solder or _____ solder.

3. Solder comes in _____ and _____ forms.

4. Wire solder is either _____ or _____.

5. Soldering coppers are made of solid _____ tapered on one end and drilled and tapped on the other end so a steel shank can be screwed in to hold a handle.

6. Soldering coppers are rated in _____ _____ _____ and stamped so the weight is exposed.

7. Soldering coppers are cut from square copper, but are beveled into an octagonal shape at the time of manufacture to form more convenient _____.

8. _____coppers are traditionally used for lighter weight metals and _____ coppers are used for heavier weight metals.

9. Coppers can be _____ to match job requirements.

10. Resistance soldering is the use of a ground line and movable _____ to heat a metal to a point where it will melt solder.

11. Resistance soldering is accomplished by feeding solder directly into the _____ when the proper temperature has been reached.

12. Carbon steels have a tendency to develop _____, _____ as the carbon content increases if proper post-heating procedures are not used.

13. The resistance factor for low-alloy and medium-carbon steels is _____ than the resistance factor for low-carbon steels.
14. Chrome-nickle alloys have a very _____ resistance factor and can be readily spot welded.

15. Surface cleaning is critical for aluminum materials because _____ _____ becomes a determining factor as to whether or not a resistance weld can be made.

Complete the Questions:

List two uses of soldering in sheet metal work.

1. _____

_____

2. _____

_____

List the major points of resistance on a spot welding application.

1. _____

2. _____

3. _____

4. _____

5. _____

6. _____

List two special considerations for spot welders tips.

1. _____

2. _____

List four safety rules for working with soldering and spot welding.

1. _____

_____

2. _____

_____

3. _____

_____

4. _____

_____

Multiple Choice:

1. Soft solder is particularly useful for _____:
   a. securing electrical connections
   b. joining sheet metal
   c. sealing seams against leakage
   d. all of the above

2. Which of the following (is, are) true statements in relation to fluxes?
   a. The purpose of soldering flux is to remove films and oxides from the base metal and solder.
   b. Soldering fluxes come in liquid, gas or solid forms.
   c. The purpose of soldering flux is to prevent reoxidation of the heated surfaces.
   d. all of the above

3. Which of the following (is, are) true with relation to corrosive fluxes?
   a. Corrosive fluxes char and burn at higher temperatures.
   b. Corrosive fluxes are used to solder electrical connections.
   c. Corrosive fluxes are recommended for those metals requiring a rapid active fluxing action.
   d. All of the above.

4. Which of the following are used for light duty soldering?
   a. soldering guns
   b. medium duty industrial irons
   c. instrument irons
   d. all of the above

5. Melted solder flows to the _____ on the metal.
   a. the highest point
   b. the hottest point
   c. the lowest point
   d. the coolest point

ANSWERS TO SAMPLE TEST QUESTIONS

Matching:
1. f
2. d
3. e
4. c
5. k
6. a
7. g
8. h
9. i
10. j
11. b

Fill in the blank:
1. weight ratio
2. hard, soft
3. bar, wire
4. solid, hollow
5. copper
6. pounds per pair
7. working edges
8. smaller, larger
9. tapered
10. electrodes
11. joint
12. hard, brittle weld
13. higher
14. high
15. surface resistance

Two uses of soldering:
1. To provide reinforcement at points of stress where two pieces of metal are joined together.
2. To provide a waterproof joint where two pieces of metal are joined together.

Major points of resistance:
1. The contact point between the top electrode and the top workpiece
2. The top workpiece
3. The interface of the top and bottom workpieces
4. The bottom workpiece
5. The contact point between the bottom electrode and the bottom workpiece
6. Resistance of electrode tips

Special considerations for tips:
1. Tips should be cleaned often with a tip cleaner only after the machine has been turned off.
2. Always select the correct tip for the job.
3. Always remember that the amount of pressure on the tips

has an important effect on the amount of weld current that flows through the joint.

Safety rules:
1. Turn the spot welder off before making adjustments.
2. Always turn the water off when finished with spot welding activity.
3. Wear goggles, face shield, and gloves.
4. Never carry a hot soldering copper away from the designated work area.

Multiple Choice:
1. d
2. d
3. c
4. c
5. b

TIN RESEARCH INSTITUTE, INC.

SOLDER INFORMATION

GRATIS PUBLICATIONS

493 Effect of Certain Impurity Elements on the Wetting Properties of 60% Tin-40% Lead Solders. M. L. Ackroyd, C. A. MacKay, and C. J. Thwaites, 13 pages. The effects of incremental additions of possible solder impurity elements on the wetting properties, oxidation tendencies and surface grittiness were determined and suggestions were made for appropriate impurity limits. 1977

519 Some Effects of Soldered Joint Geometry on Their Mechanical Strength. C. J. Thwaites and R. Duckett, 6 pages. Joint geometry has such a marked effect on overall mechanical performance that a program was undertaken to determine the most suitable configuration for more complete study of long-term mechanical properties. 1976

520 The Influence of Solder Composition on the Embrittlement of Soft-Soldered Joints on Gold Coatings. R. Duckett and M. L. Ackroyd, 8 pages. Various elements were added to solder to determine their effect on the shear and peel strengths of joints made to gold coatings. 1976

529 Solders, Solderable Finishes and Reflowed Solder Coatings. M. L. Ackroyd and C. A. MacKay, 7 pages. A discussion is given of several relevant factors - the effects of solder impurities, the range of available solderable coatings, the arguments for and against reflowing, and some of the problems which might be encountered during reflowing. 1977

560 The Flow-Melting of Electrodeposited Tin and Tin-Lead Coatings. C. J. Thwaites and P. M. Dinsdale. A revised and updated version of I.T.R.I. Publication No. 295, this publication reviews the flow-melting process, the various techniques for effecting the melting, and the means of controlling the processing. 1979

577 Barrier Layers Against Diffusion. P. J. Kay and C. A. MacKay, 6 pages. Various electroplated layers on copper and brass substrates were evaluated to determine their effectiveness as barriers in inhibiting the diffusion of a tin outer layer after heating for up to 400 days at 170C. 1979

590 Effect of Surface Contamination of Copper, Arising From Water Rinsing on Solderability. T. J. McCarthy, C. A. MacKay, and C. J. Thwaites, 4 pages. Results of experimental studies describe the effects of water rinsing after etching on the solderability of cleaned copper. 1980

612 Mass-Soldering Equipment for the Electronics Industry. S. Karpel, 16 pages. Reprinted from "Tin and Its Uses," this series recaps the state of the art in wave soldering, drag and dip soldering, and vapor phase soldering techniques. 1981

628 Alternative Solder Alloys for Capillary Plumbing Joints. R. Duckett and M. E. Warwick, 3 pages. A study was made of the quality and degree of penetration shown by pure tin and four lead-free solders (95Sn-5Sb, 97Sn-3Cu, 96.5Sn-3.5Ag, and 95Sn-5Ag) in slip coupled joints of 15 mm.

diameter copper tubing. Generally, no significant differences were seen in the flowing behavior of these alloys or in the quality of the joints obtained. 1983

632 Observations on the Growth and Impact of Intermetallic Compounds on Tin-Coated Substrates. M. E. Warwick and S. J. Muckett, 8 pages. Compound growth rates have been measured on samples up to 15 years old. The morphologies of such compounds, effects on performance, and possible methods of control of growth are considered. 1983

634 Intermetallic Compound Growth and Solderability. Part 1 Electroplated Coatings. Part 2 Reflowed Coatings. P. E. Davis, M. E. Warwick, P. J. Kay, S. J. Muckett, 10 pages. Based on AESFS-award-winning lectures, this study shows an interesting difference in solderability shelf life for reflowed versus unreflowed tin and tin-lead coatings. Differences in compound morphology may account for the better performance of reflowed coatings. 1983

644 Soldering Technology - A Decade of Developments. C. J. Thwaites, 30 pages. This review covers the metallurgy of soft solders (including mechanical properties and wettability studies), fluxes and fluxing, soldering processes and quality assurance plus health and safety considerations. 449 references are included. 1984

646 A Study of the Effect on the Mechanical Strength of Soldered Joints Made to Brass of the Presence of Antimony in 40% Tin-60% Lead Solders. C. J. Thwaites, 5 pages. A 40Sn-58Pb-2Sb alloy gave stronger joints than 40Sn-60Pb, but the data were more scattered, with some values lower for the ternary alloy. No evidence of the Sb-Zn intermetallic compound was found. 1984

658 The Wetting and Mechanical Properties of Lead-Free Capillary Plumbing Solders. M. E. Warwick, 7 pages. Wetting balance and area of spread tests were conducted using pure tin and alloys of 95Sn-5Sb, 96.5Sn-3.5Ag, and Sn-(1-3)Cu. Copper ring-and-plug joints soldered with these alloys were also used to determine their shear, stress-rupture, and fatigue strengths at 25C and 100C. Essentially, the wetting and mechanical properties of these alloys were found to be as good as those of the tin-lead solders conventionally used to solder copper pipes. 1984

659 Thermal Aging Effects Between Thick-Film Metallizations and Reflowed Solder Creams. S. J. Muckett, M. E. Warwick, and P. E. Davis, 7 pages. Metallographic studies were conducted on joints made by reflowing alloys of 63Sn-37Pb, 62Sn-36Pb-2Ag, and 50In-50Pb over three types of thick-film metallizations and aging for times to 1200 hours at 135C and 170C. Both the 62Sn-37Pb and 50In-50Pb solders formed intermetallics compounds at the same rate over Au/Pt thick-film conductors. Over Cu conductors, 50In-50Pb reacted less rapidly. A brittle Ni-P compound was formed with both solders over a W conductor with electroless Ni and electroplated Au deposits. 1986

672 The Mechanical Properties of Soldered Joints to Surface Mounted Devices. S. P. Hawkins, C. J. Thwaites, and M. E. Warwick, 3 pages. Results are given for the development of a test specimen that simulates the stress situation encountered within soldered joints associated with surface mounted devices. The effects of the stand-off, solder volume, and geometry on joint strength are reported. 1986

673 Some Metallurgical Aspects of SMD Technology. C. J. Thwaites, 5 pages. This is a review paper which addresses some of the

problems associated with new technologies introduced by the electronics industries. Data from two recent ITRI studies (described in Publications 659 and 672) are used to illustrate possible solutions to some of the problems. 1986

685 Silver-Palladium Metallisation Interactions with Reflowed Solder Pastes. C. J. Thwaites and M. Woodall, 4 pages. Data are presented on the identification and rate of formation of the intermetallic compounds formed when Ag-Pd metallized layers of three different elemental ratios are vapor-phase soldered with pastes containing the 62Sn-36Pb-2Ag or 63Sn-37Pb alloys. 1987

686 The Assessment of the Solderability of Surface Mounted Devices Using the Wetting Balance. H. Yoshiba, M. E. Warwick, and S. P. Hawkins, 10 pages. To establish a solderability method, tests were performed on copper model devices on which a small wettable area was defined using solder resist. The effects of wettable area geometry and wetting balance test conditions on the force-time traces generated were then investigated. Different solderability levels were achieved using suitable passivation treatments. With shallow solder immersion, the time before wetting begins provides a useful measure of surface wettability. Solderability tests on passive chip capacitors aged at 155C showed similar results to those on the model components in that the time before wetting begins, wetting time, and maximum wetting force can be used to determine solderability. 1987

687 Antimony in Soft Solders - A Review of the Effects and Its Use in the Soldering Industry. C. J. Thwaites, 5 pages. This comprehensive review covers the Sb levels in different soft solder specifications, applications of antimonial solders and the effects of antimony on the following properties of soft solders:

* Metallurgical structures
* Physical and mechanical properties
* Wetting properties
* Oxidation and drossing

Twenty-two references are cited in reaching the general conclusion that antimony-containing solders can conceivably be made use of in many more applications than they are traditionally restricted to. 1986

690 Surface Tension of Some Sn-Pb Alloys: Part 1 - Effect of Bi, Sb, P, Ag, and Cu on 60Sn-40Pb Solder. M. A. Carroll and M. E. Warwick, 6 pages. Measurements made using the maximum bubble pressure method showed that additions of Bi and Sb reduced the surface tension of 60Sn-40Pb while the other additions increased it. With the exception of P, these results reflect the surface tension of the additions and their tendency to segregate at the surface of the solder alloy. 1987

M211 Solderability Testing. 4 pages. Brief descriptions of six types of tests which have been de-veloped to evaluate solderability. 1982

Soldering Bits, is a quarterly abstracts bulletin from the International Tin Research Institute. Over 200 publications are regularly scanned, with the emphasis on scientific papers and reviews. Abstracts of 60-100 words are arranged under headings that reflect the major areas of soldering interest, such as Soldering materials, Quality Control, Health and Safety, etc. Full references are given for each abstract, but the Institute cannot supply copies of the complete papers.

A subscription is free of charge and should be requested from :

1353 Perry Street
Columbus,OH 43201-2693
614/424-6200

SALEABLE ITEMS

Publications

533 Soft-Soldering Handbook by C. J. Thwaites, 120 pages. This handbook provides an up-to-date guide to soldering technology, covering all aspects of the subject with special attention given to the requirements of the electrical and electronic industries. **$12.00* 1982**

555 Photographic Guide to Soldering Quality, 31 pages. Forty color photographs with explanatory guide and text outlining the basics of a quality control scheme for mass soldering operations.**$11.00* 1978**

656 Solder Alloy Data, 107 pages. Physical and mechanical property data are presented in tabular and graphic form for pure tin and 17 binary and ternary commercial solders. The tests include tensile (or shear), creep (or stress-to-rupture), and mechanical fatigue at 20C and 100C over a range of strain rates using both bulk specimens and ring-and-plug joints in copper and brass. **$17.50* 1987**

700 Soldering Surface Mount Devices, 39 pages. This is a photographic guide which illustrates ranges of acceptable and non-acceptable (in the judgement of ITRI specialists) joints on six types of SMDs using 27 color prints taken at magnifications of 10 to 20 times. An additional 23 color prints are given to show defects that may be associated with SMDs plus a brief description of possible causes.**$17.50* 1988**

Visual Aids

35mm slides. Two slide sets of mounted transparencies, with explanatory leaflets are available to assist inspectors and quality control personnel in detailed examination of good and defective soldered joints.

Slide Set No. 1 - 20 slides - $25.00 * **Slide Set No. 2 - 41 slides - $50.00***

Film and Video Tape Cassettes. A 16mm color film, "The Right Connection," is available on free loan in film form and as 1/2-inch VHS or 3/4-inch U-Matic video tapes. Following the typical printed circuit production steps, it emphasizes the "SECA" approach to reliable soldered joints where S stands for specification of all materials and processes, E stands for evaluation of incoming materials to assure meeting of specifications, C stands for control of all process steps to specifications, and A stands for assessment of the product to demonstrate the success of the prior operations. The film and video tapes are also available for purchase. Prices will be furnished on request.

A new video tape on **"Surfaces and Solderability Testing"** is available for purchase only. Intended as a training experience, this tape begins with definitions and demonstrations of solderability and fluxing and wetting behavior. Comparisons are then given on the solderability of most commercial metals and their alloys plus coatings including gold, tin, and tin-lead alloys. Six types of test procedures used to evaluate solderability are next illustrated. An explanatory leaflet accompanies each copy of the videocassette which runs for 21 minutes and is priced at **$80.00***. (Prepaid and no refunds)

***Postage to Canada, Mexico and the U.S. All sales in California and Ohio are also subject to sales tax. All prices subject to change without prior notice.**

Applications for the loan of the film or video tapes are available on request from the Tin Research Institute, Inc., office athe address shown below:

1353 Perry Street
Columbus,Ohio 43201-2693
614/424-6200

TIN RESEARCH INSTITUTE, INC.

Order Form	ITRI Pub. Nos.	No. of Copies	Price Each	Price

Name_____
Title_____
Company_____
Street_____City_____State_____Zip_____

January, 1989 M192 R

SEAMS, EDGES, LOCKS AND CLIPS

NOTE: In this unit, apprentices will learn to identify and describe basic types of seams, edges, locks and clips. It is best if the apprentices perform these skills after they have been instructed in the use of machine tools. If you have already completed that unit, the labs and Applications can be performed here. If not, have the apprentices complete them during the Machine Tool portion.

COMPETENCY:

Use seams to join two pieces of metal.

OBJECTIVES:

1. Identify commonly used seams.
2. Select the appropriate seam for a particular project.
3. Identify the purpose of a seam.
4. Identify types of locks and clips.
5. Differentiate between a seam and a lock.
6. Identify the proper location for commonly used seams.
7. Identify types of edges.

LEARNING ACTIVITIES:

1. READ "Seams, Edges and Locks" from A Short Course in Sheet Metal Shop Theory, pages 40-45.

2. READ "Methods and Techniques of Forming the Elbow Edge Lock Seam" (pp. 143-145), "Types of Seams and Methods of Fastening Used on Round Work" (pp. 150-155), "Selection of Seams" (page 156), "Location of Seams" (pp. 157-160), "Seam Allowances for Riveted Lap Seams and Elbow Edge Lock Seams" (page 161) from Practical Sheet Metal Layout: Round Fittings Used Today Including Methods and Techniques of Fabricating Round Work.

3. COMPLETE questions 1-8 on page 45 from A Short Course in Sheet Metal Shop Theory. CHECK your answers with another student or your instructor. REVIEW any questions you missed.

4. PARTICIPATE in lecture/discussion on seams.
   Note: Have available items necessary to properly show the different types of seams, locks, clips and edges as they are actually used in sheet metal projects.

5. WATCH your instructor DEMONSTRATE how basic seams, locks clips and edges are formed and finished.

6. IDENTIFY the seams, locks, clips or edges on sheet metal projects.

Note: Divide the class into groups of two or three. Give each group a finished sheet metal project (such as a rectangular duct) and ask the group to identify the seams, clips, locks or edges that are used (or would be used) on the project. Have them discuss why that particular choice was made.

7. COMPLETE the Fabrication Labs assigned by your instructor.

Note: Three sample labs are included in this guide and the apprentice guide. You may use them or create your own.

APPLICATIONS:

1. Demonstrate the ability to form the following edges:
   - Single Hem
   - Double Hem
   - Wired Edge
2. Demonstrate the ability to form three of the following seams:
   - Pittsburgh Seam
   - Lap Seam
   - Riveted Corner Seam
   - Pocket Lock Seam
   - Grooved Seam
   - Standing Seam
3. Demonstrate the ability to form two of the following locks:
   - Government Lock
   - Common Lock
   - Pocket Lock
4. Demonstrate the ability to use the following connectors:
   - Drive cleat
   - "S" cleat

EVALUATION/CHECK OUT:

1. Submit your Fabrication Labs.
2. Submit your Applications checklist.
3. Demonstrate your knowledge of the objectives in a test situation.

MATERIALS AND EQUIPMENT:

Several items to show the different types of seams, locks, clips and edges.
Materials for the fabrication labs you have chosen.

LEARNING MATERIALS:

1. Text: A Short Course in Sheet Metal Shop Theory, by Richard Budzik.
2. Text: Practical Sheet Metal Layout: Round Fittings Used Today Including Methods and Techniques of Fabricating Round Work by Richard Budzik.
3. Text: Practical Sheet Metal Layout: Specialty Items Used Today by Richard Budzik.
4. Photocopies of a written test on Fasteners. Several sample test questions are included in this guide.

FABRICATION LAB

SINGLE AND DOUBLE HEMMED EDGE

In this lab you will operate and adjust the bar folder to create a single and double hemmed edge.

MATERIAL:

Galvanized steel 3" X 10", 26 gage or lighter.

SPECIFICATIONS:

Make a 3/8" inch double hem on one side of a strip of metal and a 1/4" single hem on the other side.

DIRECTIONS FOR A SINGLE HEM:

1. Cut a strip of metal to the required size.

2. Set the gage of the bar folder for a 3/8" hem. Before setting the gage, the gage adjustment should be checked by turning the gage adjusting screw until the fingers are flush with the edge of the folding blade. The reading of the gage should then be zero. If it is not, loosen the screw and set the plate.)

3. Insert the edge of the metal to be folded between the folding blade and the jaw.

4. Pull the handle forward as far as possible.

5. Insert the hem between the folding wing and the blade with the folded edge facing upward.

6. Pull the handle forward as far as possible, completing the single hem.

7. Reset the gage for a 1/4" width hem and repeat the operations, completing the single hem.

DIRECTIONS FOR A DOUBLE HEM:

1. Reset the gage of the bar folder for a 3/8" width edge. For light metal, both hems may be turned with the same gage setting, it being possible to complete the double-hemmed edge before resetting the gage.

2. Insert the 3/8" hem with the folded edge upward, between the folding bar and the jaw.

3. Push the handle forward as far as it will go.

4. Release the metal by returning the handle to its former position.

5. Turn the metal over and insert the double hem between the folding bar and the blade, then push the handle forward as far as possible completing the double hem.

FABRICATION LAB

MAKING A GROOVED SEAM BY HAND

In this lab you will develop the ability to make a grooved seam by hand.

MATERIAL:

Two pieces 3" X 12" 28-gage steel

SPECIFICATIONS:

Make a 1/4" grooved seam by hand, using scrap metal.

DIRECTIONS:

1. Cut two pieces of metal to the required size.

2. Set the gage of the folder for a 1/4" lock.

3. Turn the lock on each piece of metal.

4. Hook the two pieces together.

5. Place the metal to be grooved on a flat stake and flatten the seam slightly with a mallet. Be sure to keep the twc pieces tightly hooked.

6. Select the proper size of hand groover, choosing one having a slot about 1/16" wider than the width of the lock.

7. Place the groover over the seam at one end and strike lightly but firmly with a hammer, making a short groove.

8. Repeat the process and groove the other end.

9. Groove the balance of the seam by moving the groover along the seam. Keep the groover moving along the seam. Do not finish the seam in one pass. It will be a neater job to groove the seam gradually in two or three passes.

10. Flatten the seam with a mallet to make it smooth, completing the grooved seam. The mallet is the only proper tool for this operation. Using a hammer would mar the work.

11. Measure the width of the metal and determine how much metal was used to form the seam.

FABRICATION LAB

MAKING A DUCT WITH A PITTSBURGH SEAM

In this lab you will learn how the Pittsburgh seam is used in making duct work.

SPECIFICATIONS:

Make a 6" X 4" duct, 12" long with a Pittsburgh seam on one corner.

DIRECTIONS:

1. On a piece of 26 gage galvanized steel lay out the pattern for a Pittsburgh lock.

2. Form the pocket lock for the Pittsburgh seam.

3. Bend the single edge.

4. Starting with the side nearest the single edge, bend the corners of the duct.

5. Finish the seam and turn the project in to your instructor.

SAMPLE TEST QUESTIONS

SEAMS, EDGES, LOCKS AND CLIPS

Note: Use the following questions as a guide to creating a test for the apprentices.

MATCHING

Match the terms on the right with their correct definitions:

_____ a.	The procedure or method by which two pieces of metal are joined together	1. Edge
_____ b.	Similar to a seam, but usually used to refer to applications where ends of ducts are joined or where bottoms of pans or boxes are formed	2. Notch
_____ c.	A piece of metal or pieces of metal formed specifically for holding two or more pieces of duct together	3. Seam
_____ d.	The procedure or method of stiffening or adding strength to the edge of a piece of metal by reforming the metal to eliminate raw edges or by adding preformed metal to eliminate raw edges	4. Lock
_____ e.	An angle cut in the edge of a piece of metal to facilitate the forming of seams, hems, and joint allowances	5. Clip
_____ f.	Any point where two pieces of round or rectangular duct join together or where fittings join duct	6. Tab
_____ g.	Material intended to be bent for an anchoring point or lap allowance	7. Joint
_____ h.	A lock formed by placing one piece of duct inside another and securing it with dovetailed tabs	8. Tap in

MULTIPLE CHOICE

1. The grooved lock seam cannot be used on:
   a. round surfaces
   b. flat surfaces
   c. corners
   d. It can be used on any of the above

2. What is the advantage of a grooved lock seam?
   a. It is air tight
   b. It can be used on corners
   c. It cannot be run through a machine
   d. It can be used on very heavy metal

3. Riveted lap seams can be used:
   a. To put collars together
   b. To assemble pieces of elbows
   c. To attaches collars to fittings
   d. All of the above

4. Which of the following is important to consider when choosing a particular seam?
   a. The gauge of metal required
   b. The machinery and facilities available
   c. How the fittings are to be used
   d. All of the above

5. On round work seams are usually located:
   a. On the shortest layout line
   b. At the throat
   c. Are staggered
   d. At the heel

6. Edges are not used for:
   a. appearance
   b. flexibility
   c. strength
   d. safety

7. Which of the following edges is stronger than a double hem?
   a. Wired edge
   b. Single hem
   c. Lap edge
   d. Open seam

8. Which of the following is used on heavy gauge metal?
   a. Riveted corner lap seam (inside)
   b. Riveted corner standing seam
   c. Riveted corner lap seam (outside)
   d. all of the above

9. Government locks are used for:
   a. Flexibility
   b. Water tight
   c. Their great strength
   d. On very light gauge metal

10. A riveted lap seam is secured with:
   a. rivets
   b. screws
   c. solder
   d. any of the above

11. A standing seam:
   a. Can be used on round projects
   b. Can be used for extra support
   c. Is the same as a Pittsburgh seam
   d. Is used with light metal

12. An edge is also called:
   a. A seam
   b. A hem
   c. A lock
   d. A clip

13. A single hem edge is formed:
   a. On the bar folder
   b. By using a brake
   c. By hand
   d. Any of the above

IDENTIFICATION

Identify the seams in the following illustrations.

ANSWERS TO SAMPLE TEST QUESTIONS

Matching:

a.	3	e.	2
b.	4	f.	7
c.	5	g.	6
d.	1	h.	8

Multiple Choice:

1. C
2. A
3. D
4. D
5. C
6. B
7. A
8. C
9. C
10. D
11. B
12. B
13. D

Identification:

1. Lap seam
2. Soldered seam
3. Butt seam
4. Hammer groove lock seam
5. Acme or hammer lock pipe seam
6. Pittsburg seam
7. Snap-lock Pittsburg seam
8. Standing seam

367

WELDING

WELDING

COMPETENCY:

Use welding equipment and materials safely.

OBJECTIVES:

1. Define terms related to welding tools and equipment.
2. List basic rules for the safe use of welding tools and materials.
3. Explain plasma welding processes.
4. Identify special considerations for welding on plastic.

COMPETENCIES:

1. Set up and clean oxyacetylene welding equipment.
2. Cut, weld, and solder using oxyacetylene welding equipment.

OBJECTIVES:

1. Identify the parts of an oxyacetylene welding system.
2. Identify the parts of an oxyacetylene welding torch.
3. Differentiate between different size welding tips for an oxyacetylene welder.
4. Explain the effects of heat on various types of material to be welded.
5. Identify a neutral flame and an oxidizing flame.
6. Explain the tempering and annealing processes.
7. Explain the techniques for surface preparation.
8. List the various types of filler rods.
9. Explain the purpose of pressure regulator valves on the system.
10. Identify various fluxes available and list their application.
11. Explain how to set-up an oxyacetylene welding system.
12. Explain how to clean an oxyacetylene welding system.
13. Summarize the importance of keeping such a system clean.
14. Describe how to test an oxyacetylene welding system.
15. Differentiate between a neutralizing flame and an oxidizing flame.
16. List the steps for bleeding lines on an oxyacetylene welding system.
17. Discuss the importance of bleeding lines.
18. Use a stick electrode.

COMPETENCY:

Braze with oxyacetylene welding equipment in all positions.

OBJECTIVES:

1. Explain the relevant safety practices and procedures.
2. Identify different types of brazing rods and their applications.
3. Identify different types of fluxes and their applications.
4. Explain what happens when tack brazing a work piece is omitted.
5. List materials that are not easily brazed.
6. Explain the importance of and purpose for surface preparation.
7. Describe the basic brazing process.

COMPETENCIES:

1. Select, prepare, adjust, and operate metallic inert gas welders (MIG).
2. Select, prepare, adjust, and operate tungsten inert gas welders (TIG).

OBJECTIVES:

1. Explain the relevant safety practices and procedures.
2. Describe the components of MIG and TIG welders.
3. Describe how the welders function.
4. Differentiate between ferrous and non-ferrous metals.
5. Identify special conditions for welding in vertical, horizontal, and overhead positions.
6. Explain the advantages of MIG and TIG.
7. Describe filler rods available and list their applications.
8. List types of metals that can be welded with MIG and TIG equipment.
9. Explain surface preparation techniques for MIG and TIG welding.
10. Demonstrate how to clean welds and welding equipment.

LEARNING ACTIVITIES:

The competencies in this unit can be obtained by using one of the following methods. Discuss your choice of addressing the objectives with your supervisor at work and your instructor.

1. ENROLL in a welding course. Usually this will be

in addition to your regular class time. Welding courses are offered at the technical colleges, and can often be take in the evening.

2. WORK CLOSELY with a journeyman or other employee at your work site to achieve the objectives. Make sure all of the competencies are addressed by using the Applications Checklist and the objectives listed in this unit.

APPLICATIONS:

1. Set up an oxyacetylene welding system.
2. Clean an oxyacetylene welding system.
3. Test an oxyacetylene welding system.
4. Light and extinguish the cutting torch.
5. Bleed the lines on an oxyacetylene welding system.
6. Select filler rod and flux correctly according to the job.
7. Make straight cuts on carbon steel plate.
8. Braze ferrous metal.
9. Braze non-ferrous metal.
10. Use different size tips for an oxyacetylene torch.
11. Weld in a vertical (up/down) position.
12. Weld in a horizontal position.
13. Weld in an overhead position.
14. Weld in a flat position.
15. Weld stainless steel with shielded metal arc welding equipment.
16. Prepare, adjust and operate an MIG welder.
17. Prepare, adjust and operate a TIG welder.
18. Strike an arc with an MIG welder.
19. Strike an arc with a TIG welder.
20. Use a stick electrode.
21. Use a plasma welder.
22. Weld on plastic.

EVALUATION/CHECK OUT:

Submit your Applications checklist.
Each application must be signed off by your instructor or supervisor.

RIGGING

RIGGING

COMPETENCIES:

1. Use rope, chains, slings, cables, and climbing devices safely.
2. Follow hand signals.
3. Move heavy equipment safely.
4. Use lifting devices properly.
5. Rig various types of scaffolding.

OBJECTIVES:

1. Estimate the weight of a load to ensure that it can be lifted safely.
2. Demonstrate how to tie various knots.
3. Identify types of cables, slings and hoists.
4. Inspect rope, sheaves, drums, hoists, cables and chains for safety.
5. Calculate safe working loads for rigging devices.
6. List the properties and characteristics of natural fiber and synthetic fiber rope, wire rope and chains.
7. Join and splice rope and wire rope.
8. Demonstrate proper hand signals for lifting and moving loads.
9. Interpret hand signals used on the job.
10. Identify basic types of scaffold and ladders.
11. Explain how to check systems completely before climbing.
12. Describe the proper storage procedures for rigging devices.
13. Explain the procedures for moving heavy equipment.

LEARNING ACTIVITIES:

1. READ the Rigging information sheet.
   Note: A copy of the sheet is included in this guide and the apprentice guide.

2. READ the "General Rope usage: Suggested Practices and Procedures" booklet.
   Note: See Resource section for ordering information.

3. READ the "Heads Up" Hoist Safe Practice Guide booklet.
   Note: See Resource section for ordering information.

4. READ the "Safety Guidelines for Scaffolding" information sheet.
   Note: A copy of the sheet is included in this guide and the apprentice guide.

5. COMPLETE the Rigging Lab.
   Note: A copy is included in this guide and the apprentice guide.

6. OPTIONAL: VIEW the videotapes assigned by your instructor.
   Note: See Resource section for suggestions.

7. WATCH your instructor demonstrate the hand signals associated with mobile crane operation. MEMORIZE the hand signals on the Hand Signals Information Sheet. PRACTICE giving hand signals.
   Note: Have apprentices practice giving hand signals in two person teams.

8. ATTEND the class presentation given by a representative from business and industry.
   Note: Several possible representatives are listed in the Resource section.

9. BRING in three examples of rigging software used in your work place. The samples may be good or damaged. DEMONSTRATE and EXPLAIN how they are used to the class. If the sample is damaged, explain how the damage occurred.

10. WATCH your instructor demonstrate how to tie and splice rope. PRACTICE tying and splicing rope.

11. VIEW the rigging software on display in your classroom.

12. COMPLETE the Estimating Weights assignment sheet.
    Note: A copy of the sheet is included in this guide and the apprentice guide.

13. COMPLETE the Oral Quiz on Hand Signals.
    Note: A copy is included in this guide and the apprentice guide.

APPLICATIONS:

Note: Many of these exercises can be completed in class as well as on the job. If you have the facilities and the resources they may make good classroom activities.

1. Tie the following knots: reef knot, bowline knot, timber hitch, and scaffold hitch.
2. Splice rope using an eyesplice and a crown knot with a back splice.
3. Use a personnel lift safely.
4. Use a materials lift safely.
5. Use a scissors lift safely.
6. Rig a piece of scaffolding.

EVALUATION/CHECK OUT:

1. Submit the Estimating Weights Assignment Sheet.
2. Submit the Rigging Lab.
3. Demonstrate the hand signals for lifting and moving in a test situation.
4. Submit your checklist of completed Applications.
5. Demonstrate your knowledge of the objectives in a test situation.

EQUIPMENT:

1. Several types of rope for classroom display.
2. Samples of rigging software (both intact and damaged)

LEARNING MATERIALS:

1. Copies of the "General Rope Usage: Suggested Practices and Procedure" booklet. See resource section for ordering information.
2. Copies of the "Heads Up: CM Hoist Safe Practice Guide" booklet. See resource section for ordering information.
3. Copies of the Hand Signal quiz included in this guide. one copy per student.
4. Copies of a test on Rigging. Several sample test questions are included in this guide.

RESOURCES:

1. Audio-Visual Materials:

   A. "Crane Safety" a slide/tape presentation produced by Manitowoc Crane, 500 South 16th, Manitowoc, WI 54220. (414-684-6621)

   B. "Crane Operations" a slide/tape presentation also produced by Manitowoc Crane. See previous listing for ordering details.

   C. "Rigging Over the Floor" a videotape produced by Marshall Maintenance, 529 South Clinton Avenue, Trenton, New Jersey 08611. (800-257-0430)

   The tape shows common rigging practices for moving equipment using rollers, dollies, roller casters, skids, air jacks and wooden skids.

   D. "Rigging with Wire Rope Slings" a videotape from Marshall Maintenance. See previous listing for ordering information.

   The video presents safe, recommended methods for

securing maximum use from wire rope slings. The skills required to select and properly use slings are portrayed in careful detail. As the viewer watches the presentation, each condition required for safe and proper rigging procedure is clearly explained.

E. "Rigging and Lifting" videotape and workbook available from Industrial Training Corporation, 14616 Southlawn Lane, Box 6009, Rockville, MD 20850. (301-279-2527)

The program is a series of four videotapes. The first tape focuses on hoists, slings, shackles trolleys, inverting a load, lifting equipment installation, and rigging disassembly. The second tape focuses on using overhead traveling cranes, lifting irregularly shaped loads, and lifting a long balanced load.

The third tape focuses on mobile cranes and forklift. The final tape covers ladders and scaffolding.

F. "Chain Care, Use, and Inspection" available from the Columbus McKinnon Corporation, Marketing Communications, Audubon and Sylvan Parkways, Amherst, NY 14228. (716-689-5400)

The program is available in videotape or slide/tape format. It discusses inspection techniques. The objective is to demonstrate how simple it is to establish and effective in-plant inspection program.

G. "Hoist Safety" also available from Columbus McKinnon Corporation. See previous listing for ordering information.

The slide/tape or video discusses safety practices for general hoists, hand hoists, and electric hoists.

2. Seminars:
   A. Jim Zajac from C&M Hoist, 716-689-5600.
   B. Lee Kraus from Wisco Lift, 414-731-4401.
   C. Tim Lock from Leschen Rope, 312-543-3133.
   D. Bob Molitor from Up-Riggers, 414-739-7587.

3. Booklets:
   A. "Recommended Loads for Wire Rope Slings" from the National Safety Council, 444 North Michigan Avenue, Chicago, IL 60611. (312-527-4800)

   B. "General Rope Usage: Suggested Practices and Procedures" from Cordage Institute, Suite 538, 314 Lincoln Street, Hingham, MA 02043. (617-749-1016)

C. "Heads Up: CM Hoist Safe Practice Guide" order from Columbus McKinnon Corporation, Hoist Division, Audubon and Sylvan Parkways, Amherst, New York, 14228.

D. "Recommended Operating and Instruction Manual" for slings. Available from Web Sling Association, 300 Buckelew Avenue, P.O. Drawer F, Jamesburg, NJ 08831. (201-521-4441)

4. Books:

A. Rigger's Handbook by Broderick and Bascom Rope Company, Route 3, Oak Grove Industrial Park, Sedalia, MO 65301. (816-827-3131) This book can serve as an excellent text for this unit.

B. Handbook of Rigging by W.E. Rossnagel.

C. Rigging Manual by Construction Safety Association of Ontario, 74 Victoria Street, Toronto, Ontario, Canada M5C2A5.

D. Rigging: Safe Use of Rope, Chain, Hoists, and Cranes by TPC Training Systems.

INFORMATION SHEET

HAND SIGNALS FOR BOOM EQUIPMENT OPERATION

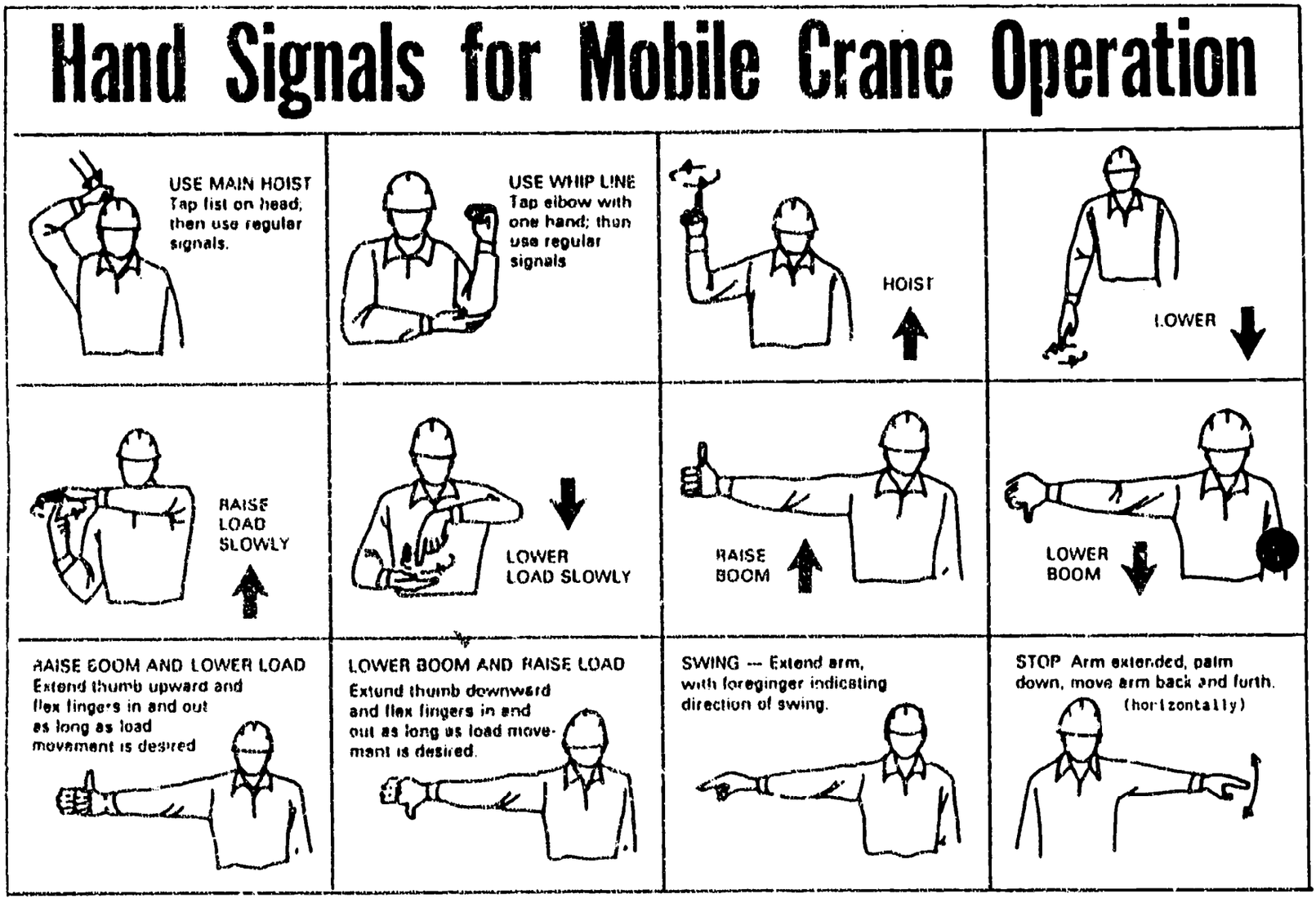

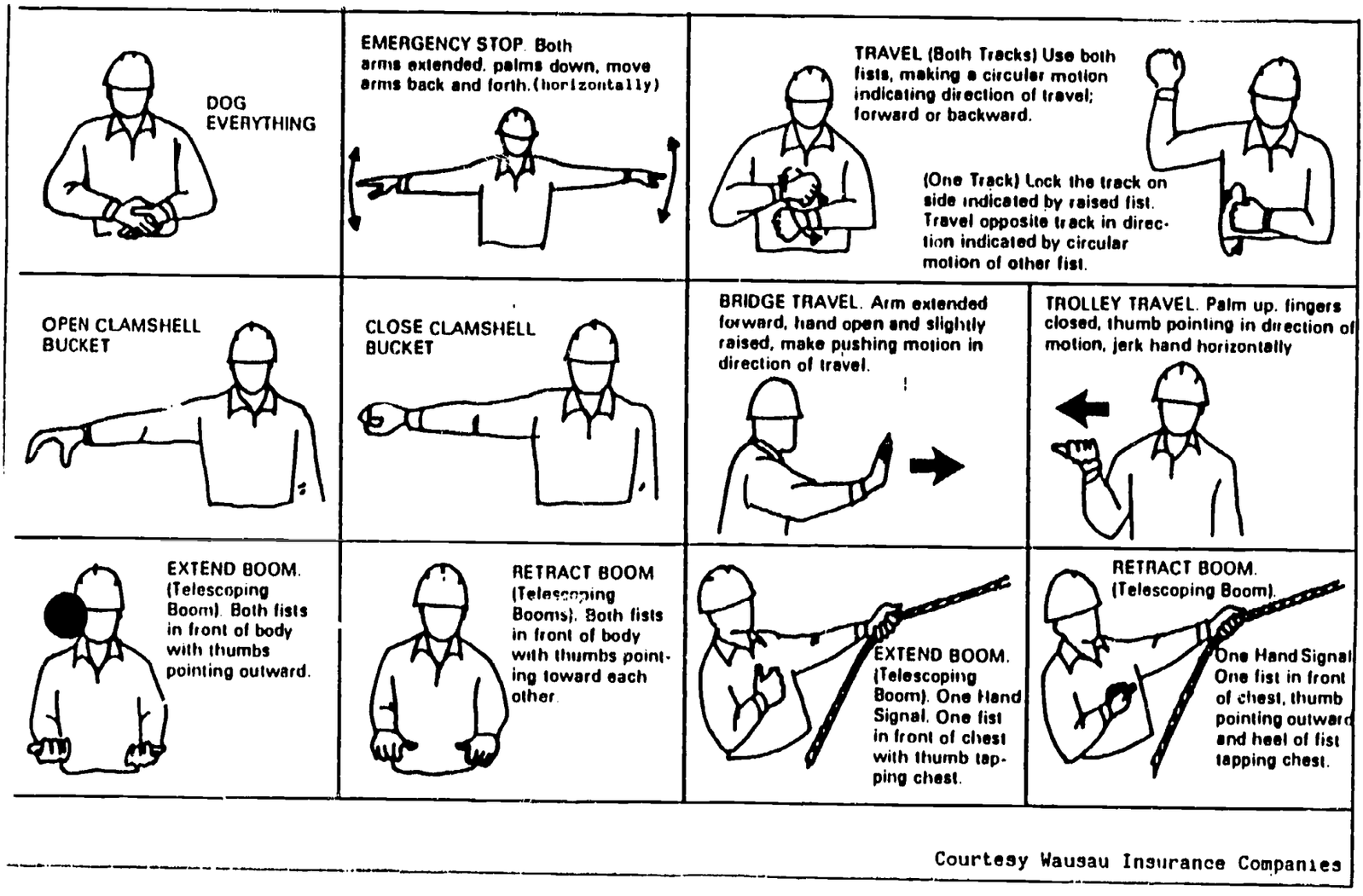

Courtesy Wausau Insurance Companies

ORAL QUIZ

HAND SIGNALS

Directions: Your instructor will demonstrate several hand signals for Boom Equipment operation. In the space provided, indicate what the hand signal means.

1. _____

_____

2. _____

_____

3. _____

_____

4. _____

_____

5. _____

_____

6. _____

_____

7. _____

_____

8. _____

_____

9. _____

_____

10. _____

_____

ASSIGNMENT SHEET

ESTIMATING WEIGHTS

Directions: Estimate the weight of the following items to be moved.

1. What is the approximate weight of a 4′ X 8′ steel sheet 2" thick?

2. What is the approximate weight of a rectangular oil reservoir 12′ X 12′ X 4′, constructed of 1/2" steel?

3. What is the approximate weight of a solid steel fan shaft 15" in diameter and 22 feet long?

4. What is the approximate weight of tin plate, 1/2 inch thick each, four feet long and eight feet wide.

5. How much weight will the following eye to eye chain slings safely lift?

A. 3/8"

B. 1/2"

C. 5/8"

D. 3/4"

E. 7/8"

6. What size chain sling is required to lift this test weight?

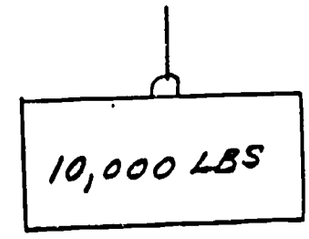

7. What size chain slings are required for the following 2 point pick?

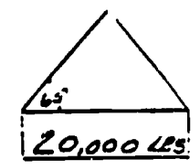

ANSWERS TO THE ESTIMATING WEIGHTS ASSIGNMENT SHEET

1. 266.5 lbs

2. 7000 lbs

3. 13,499 lbs

4. 6666.66 lbs

5. A. 6600 lbs
   B. 12,250 lbs
   C. 16,500 lbs
   D. 23,000 lbs
   E. 28,750

6. 1/2"

7. 5/8"

ASSIGNMENT SHEET

RIGGING LAB

Your instructor will describe a situation that requires rigging. Determine the rigging software you will need, how you will get the job done, the safety considerations, and the number of people needed.

- Don't under rig
- Don't seriously over rig
- Be neat and concise
- Be original and solve this by yourself

1. List all of the rigging you will need. Include chokers, shackles, cable clamps, etc.

_____

_____

_____

_____

_____

_____

2. Describe (using illustrations or a written explanation) how you will get the job done.

3. List necessary safety considerations for the project.

_____

_____

_____

_____

_____

_____

4. How many people will you need to get the job done?

_____

INFORMATION SHEET

RIGGING

Rigging is basically the use of rope and chain in various tackle and lever combinations to lift and move heavy loads. Hoisting procedures may vary from lifting heavy machinery to rooftops by crane or helicopter to erecting temporary structures such as scaffolds.

The most important consideration in rigging or hoisting is personal safety. With heavy loads, accidents happen very quickly.

Before you can start a job, however, you must calculate the weight of the loads you will handle.

ESTIMATING WEIGHT

If possible, obtain the weight of the load to be handled by checking shipping papers, manufacturer's catalogs, or serial plates. If the information is not available, you will need to estimate the weight of the load.

1. Start by determining the volume of the load. See the tables below.

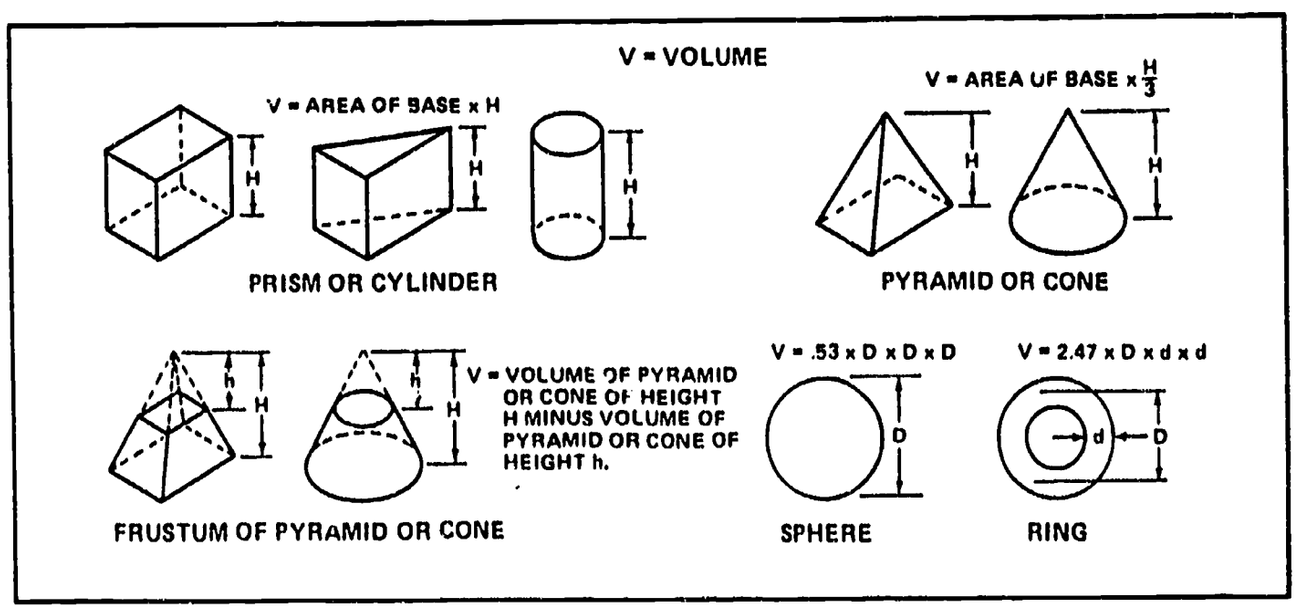

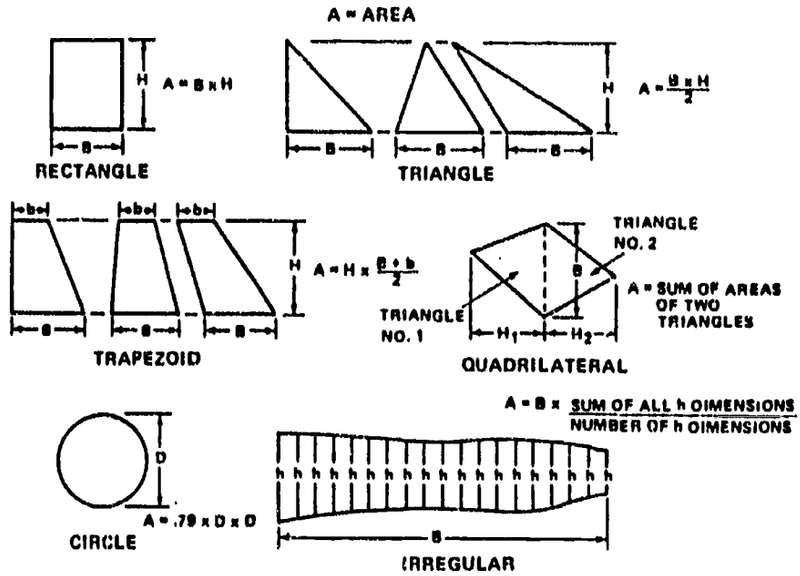

2. After finding the object's volume, find the weight of a unit volume of its content material from the table below or an engineering handbook.

Weights of Common Materials

Name of Metal	Weight lbs/cu ft	Name of Material	Weight lbs/cu ft
Aluminum	166	Bluestone	160
Antimony	418	Brick, pressed	150
Bismuth	613	Brick, common	125
Brass, cast	504	Cement, Portland (packed)	100–120
Brass, rolled	523	Cement, Portland (loose)	70–90
Copper, cast	550	Cement, slag (packed)	80–100
Copper, rolled	555	Cement, slag (loose)	55–75
Gold, 24-caret	1204	Chalk	156
Iron, cast	450	Charcoal	15–34
Iron, wrought	480	Cinder concrete	110
Lead, commercial	712	Clay, ordinary	120–150
Mercury, 60° F	846	Coal, hard, solid	93.5
Silver	655	Coal, hard, broken	54
Steel	490	Coal, soft, solid	84
Tin, cast	459	Coal, soft, broken	54
Zinc	437	Coke, loose	23–32
Name of Wood	**Weight lbs/cu ft**	Concrete, or stone	140–155
Ash	35	Earth, rammed	90–100
Beech	37	Granite	165–170
Birch	40	Gravel	117–125
Cedar	22	Lime, quick (ground loose)	53
Cherry	30	Limestone	170
Chestnut	26	Marble	164
Cork	15	Plaster of paris (cast)	80
Cypress	27	Sand	90–106
Ebony	71	Sandstone	151
Elm	30	Shale	162
Fir, Balsam	22	Slate	160–180
Hemlock	31	Terra-cotta	110
		Trap rock	170

3. Multiply the volume of the object by the weight of the material per unit volume.

4. If the object has a complex shape, divide it into its geometrical parts. Then find the volume and weight of each part's contents and add the weights together.

5. If an object is a complex solid that has holes in it, first calculate the object's volume as a solid. Then subtract the volume of the holes.

SIMPLE RIGGING MACHINES

Most complex rigging machines are made from one or more of the following: the lever, the wheel and axle, the pulley, the inclined plane, the screw and the wedge.

LEVER	The lever can be used to multiply force or motion, such as to raise, pry or dislodge an object.
WHEEL and AXLE	The wheel and axle lifting principle is the basis for all weight lifting machinery, such as cranes, chain hoists, and elevators.
PULLEYS	The pulley is a wheel that turns on an axle mounted in a frame. There are both fixed and movable pulleys.
INCLINED PLANE	The inclined plane can be used to haul a load on rollers up a ramp, or up skids onto a truck.
SCREW	The screw is something like an inclined plane wound in the form of a screw. The screw jack, which is used to lift heavy machinery, is an example of this machine.
WEDGE	A wedge serves as holding or separating devices in tools or mechanical equipment. It can be used to raise a heavy object by driving the wedge between the base of the object and the surface it rests upon.

SLINGS

A sling is a length of rope or chain what attached to the load to be lifted. Slings are made of a variety of materials:

Manilla Rope Slings	Suitable for lifting light loads. Can also be used for some heavy jobs to handle easily scratched materials.
Synthetic Slings	Stronger than manilla slings and less likely to deteriorate. They can grip and hold a load more securely than manilla rope slings.
Wire Slings	Suitable for heavy-duty hoisting jobs. Stronger than any fiber sling. Kinking can ruin a wire rope and result in sling failure. Thus make sure that a wire rope does not form kinks as it takes the strain when lifting a load.
Chain Slings	Have limited use because of their weight. The main use is to hoist rails, beams, angles and pipe. Always place pads between the chain and the load to make a better gripping surface. Before lifting, make sure the chain is free from twists and kinks. Also make sure the load is properly seated in the hook (not on the point) and that the chain is free from nicks or other damage.

DERRICKS OR STATIONARY CRANES

A-Frame Derrick	This crane gets its name from the shape of its main support. The main support is triangular and with the base resting on the floor. This triangular support frame looks like the letter A. A frames for light loads are made from wood, but heavy duty A-frames are made from steel.
Gin Pole Derricks	Gin poles are single pole units with one end firmly secured at the base to prevent movement. Use gin poles only for light working loads. The gin pole is a good choice when you need a temporary hoist to raise and lower a number of light loads.

CRANES

Jib Cranes

The jib crane can be used to do any job that you can do with any of the derricks listed previously. You can also use it to move a load horizontally to or from the base and end of the boom. Most jib cranes operate on electric power. However, you can find small hand-operated jib cranes.

Traveling Cranes

The traveling crane is an overhead crane. Mobile or traveling cranes are very useful for moving loads inside buildings. Traveling cranes can raise loads and transport them to other locations. The traveling crane operates on tracks suspended from the ceiling or top portion of the walls in a building.

Traveling cranes allow movement in three directions. All traveling cranes permit the load to be lifted vertically from a resting position. The lifting tackle gives you the vertical direction of movement. This movement alone is quite useful for many jobs.

Gantry Cranes

Most gantry cranes are much larger than overhead traveling cranes. Their large size makes them more useful outside of buildings. Gantry cranes also move on tracks, but their tracks are on the ground rather than suspended overhead.

Locomotive Cranes

Locomotive cranes operate on standard railroad track systems. Some of these units are self-propelled. Others are coupled directly to other rail cars for movement to the work area.

The boom on a locomotive crane is about 45 to 50 feet long. You must be careful in lifting heavy objects with the boom at a 90 degree angle to the track. Large lift angles can cause the crane to tip over. Use outriggers if it is necessary to work at large lift angles.

Truck-Mounted Cranes	The truck-mounted crane is much like the locomotive crane. However, truck-mounted cranes are more flexible. You can take a truck crane almost anywhere. The truck crane can work in almost any area where the ground will support it.

CHAIN HOISTS

Chain hoists are the most widely used devices for lifting loads. They usually cost less than other types of hoisting equipment. Chain hoists are dependable and usually portable. They are standard equipment in almost every shop.

Differential	Differential hoists are the simplest type of chain hoist. They are usually less expensive than other types for any given capacity. This hoist is made with two sheaves on the upper block and one on the lower, or working block. The chain is a one-piece unit, or endless chain.
Screw-geared	This type of hoist uses two separate chains. One is an endless chain. The chain drives a single sheave with pockets that fit the chain. As this sheave turns, it drives a worm and gear arrangement which furnishes the power to raise or lower the load chain. The load chain is fitted at one end with a hook connected to the load.
Spur-geared	This is the most efficient type of hoist. It is also the most expensive. This hoist uses an endless chain to drive a pocketed sheave.
Come-along	The come-along is another type of chain hoist, it uses a ratchet operated by a lever rather than a pocketed sheave. The load chain is regular or roller chain. You can use the come-along to lift loads for short distances, but you will find it used more often to stretch wire and cable.

MATERIAL HOISTS OR LIFTS

Material hoists are lifting devices capable of raising and transporting loads of material from one location to another.

Forklift	The forklift is a small 4-wheeled vehicle. The front of the machine has two steel lifting arms or forks. The forks extend outward from a housing. The load lifting mechanism is powered hydraulically.
Pallet Lift	The pallet lift is a type of floor jack. It is useful in moving heavy objects on warehouse pallets from one location to another. These units are manually operated.
Three-wheeled warehouse trucks	Similar to forklifts. However, the working end is fitted with a small boom and lifting hook rather than hydraulic forks. This unit can operate in close areas. It is capable of lifting medium loads and relocating these loads to other points.

SCAFFOLDING

A scaffold is a temporary or semi-permanent elevated platform that has a wood or metal frame with wooden planks to support people and materials at heights above ground level.

Pole Scaffold	This is the simplest and most common type of scaffold. It is made from wood or metal poles positioned 90 degrees to the ground. Horizontal and diagonal braces between the poles prevent swaying movement during working operations. The poles are usually tapered at the bottom end. The scaffold is not connected to a building or other support. Because it stands by itself, we call it an independent scaffold.
Trestle Scaffold	The trestle scaffold is often used for low heights. They use two frames that look like sawhorses. Step levels or rungs are inserted between the frames from their bases to their common support at the top. Planks placed across rungs at equal heights make up

the working area.

Swinging Scaffolds	You can use this type of scaffold for jobs too high for ground-supported scaffolding. A swinging scaffold has a plank platform supported by wire ropes at two points. The ropes suspend from an overhead support to permit raising or lowering the scaffold to the required work level. Always loadtest swinging platforms before you use them. In addition you must wear a safety belt with a strong safety line when working on this scaffold.
Suspended Scaffolds	Used mainly for heavy repair jobs. Most suspended scaffolds have slatted wooden, steel, or metal reinforcement wooden platforms. You can raise or lower suspended scaffolding from the top of a building or a ceiling beam.
Sectional Metal Framework	Sectional metal framework with bracing and cross bracing is the best scaffolding for most maintenance work. Construct the framework so that wheel casters can be installed for easy movement of the scaffold.
Workmen's Lift Platforms	Workmen's lift platforms let workers sit comfortably while working at heights. Hydraulic and mechanical lift devices adjust them upward or downward. Some platforms use a combination of hydraulic and mechanical power. They can be controlled electrically from a platform using a remote switch. The scissor lift is one type of workmen's lift.

INFORMATION SHEET

SAFETY GUIDELINES FOR SCAFFOLDING

8. Toeboards are required whenever people are required to work or pass under or around the scaffold platform.

9. Access must be provided to all work platforms. If it is not available from the structure, access ladders, frames with built-in ladders, or stairways must be provided. When frames with built-in ladders are used, cleated plank or fabricated plank must be used at platform levels to minimize or eliminate platform overhang. Access ladders must extend at least three (3) feet above platforms.

10. Side and end brackets are designed to support people only. Materials should never be placed on cantilevered platforms unless the assembly has been designed to support material loads by a qualified person.

These types of platforms cause overturning and uplift forces which must be compensated for. All frames should be fastened together to prevent uplift and overturning moment compensated for with counterweights or adequate ties.

11. Putlogs must never be used for the storage of materials. They are designed for personnel use only. Special care should be taken when putlogs are used.

a. Putlogs should overhang the support points by at least 6". Use putlogs hangers with bolts **fastened** to support putlogs on frames.

b. Putlog spans of greater than 12' require knee-bracing and lateral support. Contact your Safway dealer.

c. Putlogs used as side or end brackets need special bracing. Contact your Safway dealer.

12. Bridging between towers should not be done with plank or stages unless the assembly is designed by a qualified person and overturning moments have been compensated for.

13. Scaffold should not be used as material hoist towers or for mounting derricks unless the assembly is designed by a qualified person.

14. CHECK THE ERECTED ASSEMBLY BEFORE USE. A qualified person should thoroughly inspect the completed assembly to see that it complies with all safety codes, that nuts and bolts are tightened, that it is level and plumb, that work platforms are fully planked, that guardrails are in place and safe access is provided.

C. Erection of Rolling Scaffolds.

The following **additional** precautions apply to the use of rolling towers:

1. Height of the tower must not exceed four (4) times the minimum base dimension (three (3) times in California). Outrigger frames or outrigger units on both sides of the tower may be used to increase base width dimension when necessary.

2. All casters must be secured to frame legs or screwjacks with a nut and bolt or other secure means. Total weight of tower should not exceed the capacity of the casters.

3. Screwjacks must not be extended more than 12 inches above caster base. Tower must be kept level and plumb at all times.

4. Horizontal/diagonal bracing must be used at the bottom and top of tower and at intermediate levels of 20 feet. Fabricated planks with hooks may replace the top diagonal brace.

5. All frames must be fully cross-braced.

6. Only prefabricated plank or cleated plank should be used.

7. Casters must be locked at all times the scaffold is not being moved.

BEST COPY AVAILABLE

II. USE OF SCAFFOLDS.

A. All Scaffolds.

1. **Inspect** the scaffold assembly before each use to see that it is assembled correctly, that it is level and plumb, base plates are in firm contact with sills, bracing is in place and connected, platforms are fully planked, guardrails in place, safe access is provided, that it is properly tied and/or guyed and that there are no overhead obstructions or electric lines within 12 feet of the scaffold assembly.

2. Use only the safe means of access that is provided. Do not climb bracing or frames not specifically designed for climbing. If such access is not provided, insist that it be provided.

3. Climb safely!

a. Face the rungs as you climb up or down.

b. Use both hands.

c. Do not try to carry materials while you climb.

d. Be sure of your footing and balance before you let go with your hands. Keep one hand firmly on frame or ladder at all times.

e. Clean shoes and rungs to avoid slipping.

4. DO NOT work on slippery platforms.

5. DO NOT overload platforms with materials.

6. Working heights should not be extended by planking guardrails or by use of boxes or ladders on scaffold platforms.

7. DO NOT remove any component of a completed scaffold assembly except under the supervision of a qualified person. Any component that has been removed should be immediately replaced.

B. Rolling Towers.

All of the above precautions plus:

1. DO NOT RIDE MANUALLY PROPELLED ROLLING SCAFFOLD. NO PERSONNEL SHOULD BE ON THE TOWER WHILE IT IS BEING MOVED.

2. Lock all casters before getting on the tower.

3. Work only within the platform area; do not try to extend overhead work area by reaching out over guardrailing.

4. DO NOT bridge between two rolling towers with plank or stages.

5. Secure all materials before moving scaffold.

6. Be sure floor surface is clear of obstructions or holes before moving scaffold.

7. Be sure there are no overhead obstructions or electric power lines in the path of the rolling scaffold.

8. Rolling towers must only be used on level surfaces.

9. Move rolling towers by pushing at the base level only. DO NOT pull from the top.

Understanding and following these safety guidelines will increase your personal safety and the safety of your fellow workers.

NOTE:

ADDITIONAL INSTRUCTIONS AND INFORMATION ARE AVAILABLE FROM SAFWAY STEEL PRODUCTS REGARDING:

-Erection procedures (Booklet or slide/video)	-Counterweights
-Load capacities	-Fall protection
-Rigging	-Parts identification
	-Engineering assistance

SAFWAY SECTIONAL SCAFFOLDING

SCAFFOLD SAFETY IS EVERYONE'S RESPONSIBILITY!

Everyone's safety depends upon the proper erection and safe use of scaffolding. Inspect your scaffolding before each use to see that the assembly has not been altered and is safe for your use.

WARNING!

SERIOUS INJURY OR DEATH CAN RESULT FROM YOUR FAILURE TO FAMILIARIZE YOURSELF, AND COMPLY WITH ALL APPLICABLE SAFETY REQUIREMENTS OF FEDERAL, STATE AND LOCAL REGULATIONS AND THESE SAFETY GUIDELINES BEFORE ERECTING, USING OR DISMANTLING THIS SCAFFOLD.

SAFETY MUST COME FIRST!

Safway equipment is designed and manufactured with the user in mind. The safety that goes into each piece of equipment, however, cannot offset carelessness on the part of the erector or the user. With this thought in mind, IN ORDER TO PREVENT INJURY TO THE USERS of Safway equipment, we urge you to follow these safety guidelines.

I. ERECTION OF SCAFFOLDING.

A. Prior to Erection - All Scaffold Assemblies.

1. Jobsite should be inspected to determine ground conditions or strength of supporting structure, and for proximity of electric power lines, overhead obstructions, wind conditions, the need for overhead protection or weather protection coverings. These conditions must be evaluated and adequately provided for.

2. Frame spacing and mud sill size can only be determined after the total loads to be imposed on the scaffold and the strength of the supporting soil or structure are calculated and considered. This analysis must be done by a qualified person. Load carrying information on Safway components is available from your Safway dealer.

3. Stationary scaffolds over 125 feet in height and rolling scaffolds over 60 feet in height must be designed by a professional engineer.

4. All equipment must be inspected to see that it is in good condition and is serviceable. Damaged or deteriorated equipment should not be used.

5. Wood plank should be inspected to see that it is graded for scaffold use, is sound and in good condition, straight grained, free from saw cuts, splits and holes.

CAUTION: Not all species and grades of lumber can be used as scaffold plank. Wood planks used for scaffolding must be specifically graded for scaffold use by an approved grading agency.

6. The scaffold assembly must be designed to comply with local, State and Federal safety requirements.

B. Erection of Fixed Scaffold.

1. Scaffold must be erected, moved, or disassembled only under the supervision of qualified persons. Hard hats must be worn by all persons erecting, moving, dismantling or using scaffolding.

2. Mud sills must be of adequate size to distribute the loads on the scaffolding to the soil or supporting structure. Special care is needed when scaffolding is to be erected on fill or other soft ground or on frozen ground. Sills should be level and in full contact with the supporting surface.

3. Base plates or screwjacks with base plates must be in firm contact with both the sills and the legs of the scaffolding. Compensate for uneven ground with screw-jacks with base plates. DO NOT USE unstable objects such as blocks, loose bricks, etc.

4. Plumb and level scaffold until connections can be made with ease. Do not force members to fit. Be sure scaffold stays level and plumb as erection progresses.

5. Ties, guys, bracing and/or outriggers may be needed to assure a safe stable scaffold assembly. The height of the scaffold in relation to the minimum base width, wind loads, the use of brackets or cantilevered platforms and imposed scaffold loads determines the need for stability bracing. The following general guides are minimum requirements.

a. Federal OSHA requires that scaffolding must always be secured when the height of the scaffold exceeds four (4) times the minimum base width. (California requires stability bracing when the scaffold height exceeds three (3) times the minimum base width.)

b. The bottom tie must be placed no higher than four (4) times the minimum base width and every 26 feet vertically thereafter. Ties should be placed as close to the top of the scaffold as possible.

c. Vertical ties should be placed at the ends of scaffold runs and at no more than 30 feet horizontal intervals in between.

d. Ties should be installed as the erection progresses and not removed until scaffold is dismantled to that height.

e. Side brackets, cantilevered platforms, pulleys or hoist arms and wind conditions introduce overturning and uplift forces that must be considered and compensated for. These assemblies may require additional bracing, tieing or guying.

f. Circular scaffolds erected completely around or within a structure may be restrained from tipping by the use of "stand off" bracing members.

g. Each leg of a free standing tower must be guyed at the intervals outlined above or otherwise restrained to prevent tipping or overturning.

6. Work platforms must be fully planked either with scaffold graded solid sawn or laminated plank, in good sound condition, or with fabricated platforms in good condition.

a. Each plank must overlap the support by a minimum of 6 inches or be cleated, i.e. 8 foot planks on 7 foot spans must be cleated.

b. Plank should not extend beyond the support by more than 18". Such overhangs should be separated from the work platform by guard-railing so that they cannot be walked on.

c. Plank on continuous runs must extend over the supports and overlap each other by at least 12 inches.

d. Spans of full thickness, 2 inch by 10 inch scaffold grade planks, should never exceed 10 feet. Loads on plank should be evenly distributed and not exceed the allowable loads for type of plank being used. No more than one person should stand on an individual plank at one time.

e. Planks and/or platforms should be secured to scaffolding when necessary to prevent uplift or displacement because of high winds or other job conditions.

7. Guardrails must be used on all open sides and ends of scaffold platforms. Both top and midrails are required. Local codes specify the minimum heights where guard-rails are required. Use at lower heights if falls can cause injury.

SAMPLE TEST QUESTIONS

RIGGING

Note: Using the following questions, create a test on Rigging.

Multiple Choice:

1. Lifts are powered using these methods:
   a. winch and cable
   b. hydraulic pump
   c. carbon-dioxide or compressed air
   d. all of the above

2. Lifts are used to raise or lower:
   a. people
   b. materials
   c. all of the above

3. Material-carrying lifts are able to carry:
   a. people
   b. material
   c. children
   d. all of the above

4. A scissors lift is able to:
   a. take a worker to a work position
   b. be raised and lowered by a scissors configuration
   c. have auxiliary emergency lowering controls
   d. all of the above

5. A fork lift is:
   a. a powered truck to travel from home to work
   b. a powered lift for personnel only
   c. a powered, industrial lift-truck that is designed for material handling
   d. a powered clamp that picks up dirt.

6. The types of scaffold are:
   a. built-up
   b. suspended
   c. swinging
   d. all of the above

7. Independent pole scaffolds must be anchored to:
   a. adjacent structure
   b. guy wires
   c. both a and b
   d. none of the above

8. To prevent a load from tipping when you lift it, attach the hoist on the load:
   a. at one end
   b. below its center of gravity
   c. at or above its center of gravity
   d. in the middle

9. Compared to manila slings, synthetic slings are:
   a. stronger
   b. larger
   c. more likely to deteriorate
   d. more likely to slip

10. Which of the following precautions should you take when using chain slings?
   a. Avoid twisting and kinks
   b. Avoid sudden jerks
   c. Protect the chain from sharp corners
   d. All of the above

11. What is a good type of sling to use on a load requiring good gripping action, such as a load of pipe?
   a. basket sling
   b. choker sling
   c. bridle sling
   d. grommet sling

12. What should you look for when inspecting fiber rope slings?
   a. deterioration due to exposure
   b. broken or cut fibers
   c. proper splicing
   d. all of the above

13. Which of the following natural fibers make the best rope?
   a. cotton
   b. hemp
   c. manilla
   d. sisal

14. What must you know about a rope to prevent overloading?
   a. its breaking strength
   b. the safety factor
   c. its safe working load
   d. all of the above

15. Which of the following conditions on the inside of a rope indicate you should not use it for hoisting?
   a. dirt or stains
   b. broken yarns
   c. powdered fiber
   d. all of the above

16. When you remove a defective link from a chain, you should fasten the two adjacent links together by means of which of the following?
   a. bolt
   b. wire
   c. connecting link
   d. all of the above

17. The simplest and least expensive type of chain hoist is the:
   a. differential hoist
   b. spur-geared hoist
   c. come-along
   d. A-frame

18. The most efficient and most expensive type of chain hoist is the:
   a. screw-eared hoist
   b. differential hoist
   c. spur-geared hoist
   d. come-along

19. Which of the following safety precautions should you observe when working on scaffolds?
   a. climb up the frame work
   b. use bricks to level planking
   c. secure tool box to scaffold
   d. all of the above

20. One of the most common of all wire rope failures is due to:
   a. rust
   b. dirt
   c. lubrication
   d. kinking

21. Never use a chain hoist with a:
   a. dual system of operation
   b. separate sling
   c. defective load brake
   d. a hook that has been moused

ANSWERS TO SAMPLE TEST QUESTIONS

Answers to Multiple Choice:

1. D
2. C
3. B
4. D
5. C
6. D
7. C
8. C
9. A
10. D
11. B
12. D
13. C
14. D
15. D
16. C
17. A
18. C
19. D
20. D
21. C

INSTALLATION

INSTALLATION

COMPETENCY:

Correctly install completed project.

OBJECTIVES:

1. Analyze safety limitations.
2. List requirements for a safe installation site.
3. Summarize site specifications needed before installation can occur.
4. Outline the steps for moving plant equipment to the point of installation.
5. Identify various equipment needed for a particular project.
6. Demonstrate proper procedure for assembling and disassembling various pieces of equipment.
7. Demonstrate methods of properly installing hangers.
8. Summarize the process used to obtain a welding and burning permit.
9. Outline the steps used to set up a fire watch.
10. Discuss airflow testing, adjusting and balancing.
11. List standards for completing a job professionally.
12. Follow a blueprint.
13. Have the responsible party give their approval of the final project.

LEARNING ACTIVITIES:

1. READ "Preventing Machine Installation Problems" from Manufacturing Engineering, April, 1980 and COMPLETE the assignment sheet.
   Note: A copy of the assignment sheet are included in this guide and the apprentice guide.

2. PARTICIPATE in class lectures and discussions.

3. WATCH your instructor properly install a sheet metal product.

4. COMPLETE the Installation assignment sheet.
   Note: A copy of the sheet is included in this guide and the apprentice guide.

APPLICATIONS:

1. Move plant equipment to the point of installation.
2. Assemble appropriate equipment needed for installing a product.
3. Install hangers.
4. Obtain a welding permit.
5. Obtain a burning permit.
6. Set up a fire watch.

EVALUATION/CHECK OUT:

1. Submit your "Preventing Machine Installation Problems" assignment sheet.
2. Submit the completed Installation assignment sheet.
3. Submit the completed application checklist.

EQUIPMENT:

Samples of sheet metal products, or drawing of products ready to be installed.

LEARNING MATERIALS:

A copy of the "Preventing Machine Installation Problems" from Manufacturing Engineering, April, 1980.

ASSIGNMENT SHEET

PREVENTING MACHINE INSTALLATION PROBLEMS

Reference: The article, "Preventing Machinery and Installation Problems."

1. What are the three problems that can develop from improper machinery installation?

_____

_____

_____

2. What do shock and vibration isolation have to do with determining installation required?

_____

_____

_____

True or False:

_____ 3. The foundation must become part of the structure on a support critical machine.

_____ 4. Isolating a support critical machine requires isolating the foundation as well.

_____ 5. Local soil conditions must be considered in foundation design.

_____ 6. It is perfectly acceptable to mount parts of a large machine on separate foundations.

_____ 7. A lathe 36" between centers can be installed directly to the floor with anchors.

Matching:

_____ 8. Anchor bolts and shims	A. Cork, rubber, felt, etc.
_____ 9. Leveling wedges	B. Reduces transmission of vibration and noise
_____ 10. Anchor bolts and grout	C. Provide a better connection than shim packs or leveling screws
_____ 11. Isolation material	D. Most rigid machine to foundation connection
_____ 12. Isolated inertia block	E. Provide a moderately rigid connection between foundation machinery

ANSWERS TO PREVENTING MACHINE INSTALLATION PROBLEMS

ASSIGNMENT SHEET

1. Frequent alignment
   Excessive maintenance and scrap
   Reduced life

2. Isolate the machines that transmit large vibrations, isolate critical tolerance machines.

3. T

4. T

5. T

6. F

7. T

8. E

9. C

10. D

11. A

12. B

ASSIGNMENT SHEET

INSTALL SHEET METAL PRODUCTS

Your instructor will give you four examples of completed sheet metal products that need to be installed. In groups of four, brainstorm various solutions to arrive at appropriate installation methods for that product. Record your recommended solution on the following chart.

DESCRIPTION OF PRODUCT	EQUIPMENT NEEDED TO INSTALL PRODUCT	PROCEDURE USED FOR INSTALLATION
1.		
2.		

DESCRIPTION OF PRODUCT	EQUIPMENT NEEDED TO INSTALL PRODUCT	PROCEDURE USED FOR INSTALLATION
3.		
4.		

REPAIR

REPAIR

COMPETENCY:

Repair or replace damaged sheet metal products.

OBJECTIVES:

1. Recognize the need for repairs.
2. Assess degree of damage.
3. Determine if the repair should be temporary or permanent.
4. Evaluate the type of repair or replacement needed.
5. Describe how to repair the damage.
6. Discuss repair with journeyman or other supervisor.

LEARNING ACTIVITIES:

1. PARTICIPATE in class lectures and discussion on repair.

2. BRING IN a sheet metal product from your workplace that needs repair. Working with another student, discuss the type of repair needed. In a class presentation, summarize the methods used to repair the damage. If a sheet metal product is not available, provide a sketch of a damaged piece.

3. COMPLETE the Sheet Metal Repair assignment sheet.
   Note: A copy of the sheet is included in this guide and the apprentice guide.

4. COMPLETE the Repair Observation assignment sheet.
   Note: A copy of the sheet is included in this guide and the apprentice guide.

5. COMPLETE the Assessment of Repair and Recommended Action assignment sheet.
   Note: A copy of the sheet is included in this guide and the apprentice guide. Provide the actual damaged product, picture, or sketch of the product.

APPLICATIONS:

1. Repair ductwork.
2. Replace a rusted guard.
3. Examine a damaged exhaust system. Determine whether it should be repaired or replaced.
4. Replace a worn shield.

EVALUATION/CHECK OUT:

1. Submit your Sheet Metal Repair assignment sheet.
2. Submit your Repair Observation assignment sheet.
3. Submit your Assessment of Repair and Recommended Action assignment sheet.
4. Submit your checklist of applications.

EQUIPMENT:

Samples of sheet metal products, or drawings of products needing repair.

ASSIGNMENT SHEET

SHEET METAL REPAIR

List four sheet metal products you have repaired. Summarize the steps you took in repairing the products. Meet with other apprentices in your class and discuss the action you took to complete the repair and why. Record other ideas for repairing similar product in the future.

PRODUCT NEEDING REPAIR AND ASSESSMENT OF DAMAGE

	PRODUCT	DAMAGE
1.	_____	_____
		_____
		_____

DESCRIPTION OF REPAIR

_____

_____

_____

	PRODUCT	DAMAGE
2.	_____	_____
		_____
		_____

DESCRIPTION OF REPAIR

_____

_____

_____

PRODUCT DAMAGE

3. _____ _____

_____

_____

DESCRIPTION OF REPAIR

_____

_____

_____

PRODUCT DAMAGE

4. _____ _____

_____

_____

DESCRIPTION OF REPAIR

_____

_____

_____

ASSIGNMENT SHEET

REPAIR OBSERVATION

Study two repair jobs that have been accomplished at your workplace. Talk with your journeyman about the type of damage that was present and the methods used for repair. On the following lines identify the damage, summarize the methods used for repair, and list the reasons why they were used. Be prepared to present the information to the class.

1. _____

2. _____

ASSIGNMENT SHEET

ASSESSMENT OF REPAIR AND RECOMMENDED ACTION

Your instructor will give you three examples of sheet metal products that need repair. Study the examples and complete the following chart.

ASSESSMENT OF DAMAGE	SHOULD IT BE REPLACED OR REPAIRED?	TYPE OF REPAIR NEEDED	PROCEDURE FOR REPAIR
1.			
2.			

ASSESSMENT OF DAMAGE	SHOULD IT BE REPLACED OR REPAIRED?	TYPE OF REPAIR NEEDED	PROCEDURE FOR REPAIR
3.			

INDUSTRIAL SHEET METAL APPRENTICE

COMPETENCY PROFILE

SHEET METAL APPRENTICE

COMPETENCY PROFILE

APPLICATION CHECKLISTS

NAME OF APPRENTICE _____

COMPANY _____

SUPERVISOR _____

INTRODUCTION

A successful apprenticeship includes both hands on and classroom learning. This combination allows the apprentice to practice skills and technical information learned in the classroom setting through on the job application.

This handbook includes a series of recommended application exercises for your apprentice. They coincide with the competencies and learning objectives that are taught in the classroom. The exercises have been developed to give your apprentice the opportunity to practice the skills being taught in the classroom in his or her work setting.

DIRECTIONS

The exercises are most beneficial when they coincide with the information the apprentice is learning in class. You will receive the dates these topics are covered in class from your apprentice's instructor. Whenever possible, arrange for the application activities to be completed during those time frames.

The activities must be performed to the individual supervisor's satisfaction. This allows for differences in the policies and procedures at different work sites. When the apprentice has completed an activity he or she will indicate that by placing his/her initials in the appropriate space. After you have supervised the application, indicate your approval by placing your initials in the appropriate space. If the activity does not apply, simply mark the N/A space. When the apprentice has performed all of the activities listed, sign your name on the line at the bottom of the page and ask the apprentice to do the same. If you wish to make notes regarding the apprentice's performance, do so in the evaluator's comments section.

SAFETY

COMPETENCIES:

1. Follow general safety precautions.
2. Practice proper housekeeping procedures.

APPLICATIONS:	Can Perform (Apprentice Initial)	Can Perform (Supervisor Initial)	N/A
1. Clean work area.	_____	_____	_____
2. Wear appropriate protective clothing.	_____	_____	_____
3. Use safety glasses or face shields.	_____	_____	_____
4. Store and clean tools properly.	_____	_____	_____
5. Follow lockout procedures.	_____	_____	_____
6. Follow proper tank entry procedures.	_____	_____	_____

Evaluator's Comments:

Evaluator's Signature _____

Apprentice's Signature _____

Date competency completed _____

COMMUNICATION

COMPETENCIES:

1. Communicate effectively with management, co-workers, and customers.
2. Receive verbal messages accurately.
3. Overcome barriers to effective communication.

APPLICATIONS:

This application is designed to give the apprentice and the supervisor a tool to discuss communication skills and areas of improvement.

1. Begin by having the supervisor complete the Communication Skills Checklist.
2. Next the supervisor and apprentice will discuss the checklist. The supervisor should explain why the apprentice was rated as he/she was. This is a good time for the apprentice to ask questions.
3. The apprentice and the supervisor should agree on three areas for improvement.
4. The apprentice completes the action plan in the Apprentice Guide.
5. Three months later, the apprentice and supervisor should discuss whether the apprentice has kept to the action plan.

Evaluator's Comments:

Evaluator's Signature _____

Apprentice's Signature _____

Date competency completed _____

COMMUNICATION SKILLS CHECKLIST

Apprentice's Name _____

Your Name _____

Date _____

Evaluate the apprentice's communication skills by completing the following checklist. Use the rating schedule listed below:

0 - BELOW EXPECTED: Performance is below minimum expectations. Need for improvement is evident.
1 - SATISFACTORY: Sometimes performance meets expectations, but not consistently.
2 - PROFESSIONAL: Performance consistently meets expectations.

1.	Apprentice shows the ability to work effectively with management.	0	1	2
2.	Apprentice follows instructions accurately.	0	1	2
3.	Apprentice gets along well with fellow workers.	0	1	2
4.	Apprentice listens to work direction carefully.	0	1	2
5.	Apprentice seeks out feedback to improve performance.	0	1	2
6.	Apprentice can accept criticism and change behavior accordingly.	0	1	2
7.	Apprentice communicates ideas, needs, directions or problems in a clearly understandable way.	0	1	2
8.	Apprentice can communicate effectively with customers.	0	1	2
9.	Apprentice accurately records job data.	0	1	2
10.	Apprentice remains aware of new developments in the trade.	0	1	2

COMMUNICATION STRENGTHS:

AREAS FOR IMPROVEMENT:

FEASIBILITY STUDY

COMPETENCY:

Conduct a feasibility study.

APPLICATIONS:	Can Perform (Apprentice Initial)	Can Perform (Supervisor Initial)	N/A
1. Inspect the work site.	_____	_____	_____
2. Identify limitations of work site.	_____	_____	_____
3. Estimate cost of project.	_____	_____	_____
4. Establish project options.	_____	_____	_____
5. Recommend best solution.	_____	_____	_____

Evaluator's Comments:

Evaluator's Signature _____

Apprentice's Signature _____

Date competency completed _____

PLANNING

COMPETENCY:

Effectively plan a project.

APPLICATIONS:	Can Perform (Apprentice Initial)	Can Perform (Supervisor Initial)	N/A
1. Sketch and draw the project concept.	_____	_____	_____
2. Develop an appropriate material list.	_____	_____	_____
3. Estimate cost requirements.	_____	_____	_____
4. Estimate time requirements.	_____	_____	_____
5. Schedule work.	_____	_____	_____

Evaluator's Comments:

Evaluator's Signature _____

Apprentice's Signature _____

Date competency completed _____

LAYOUT

COMPETENCIES:

1. Interpret blueprint specifications.
2. Use mathematics to perform sheet metal operations.
3. Use parallel lines, radial lines, triangulation, and combination methods of development to complete basic and complex sheet metal layouts.
4. Use measuring equipment.
5. Use layout tools.

APPLICATIONS:	Can Perform (Apprentice Initial)	Can Perform (Supervisor Initial)	N/A
1. Layout out a rectangular duct with a double angle to given standards using parallel line development.	_____	_____	_____
2. Layout a pattern for intersecting pipes to given standards using parallel line development.	_____	_____	_____
3. Layout a pattern for round elbows to given standards using parallel line development.	_____	_____	_____
4. Layout a pattern for a pyramid to given standards using triangulation.	_____	_____	_____
5. Layout a pattern for a rectangular transition to given standards using triangulation.	_____	_____	_____
6. Layout a pattern for a round taper to given standards using triangulation.	_____	_____	_____
7. Layout a pattern for a round taper to given standards using radial line development.	_____	_____	_____
8. Layout a taper on a pitch pattern to given standards using radial line development.	_____	_____	_____

9. Read a rule.	_____	_____	_____
10. Measure with spring calipers.	_____	_____	_____
11. Measure with a micrometer.	_____	_____	_____
12. Measure with a vernier caliper.	_____	_____	_____
13. Scribe a line on metal.	_____	_____	_____
14. Use a circumference rule.	_____	_____	_____
15. Use a steel square.	_____	_____	_____
16. Use a protractor to layout angles.	_____	_____	_____
17. Use dividers to layout arcs and circles.	_____	_____	_____

Evaluator's Comments:

Evaluator's Signature _____

Apprentice's Signature _____

Date competency completed _____

FABRICATION

COMPETENCIES:

1. Select appropriate hand tools for a job.
2. Use hand tools safely.
3. Select and use sheet metal machinery safely.
4. Cut and notch sheet metal.
5. Punch and drill holes in sheet metal.
6. Bend and shape sheet metal.
7. Fabricate metal using rolling and forming machines.

APPLICATIONS:

	Can Perform (Apprentice Initial)	Can Perform (Supervisor Initial)	N/A
1. Use hand ships to make the following cuts on sheet metal:			
- straight cuts	_____	_____	_____
- outside curved cuts	_____	_____	_____
- internal cuts	_____	_____	_____
2. Use a foot operated squaring shear to cut metal.	_____	_____	_____
3. Set up the press brake.	_____	_____	_____
4. Use the bar folder, making all necessary adjustments.	_____	_____	_____
5. Use the hand brake.	_____	_____	_____
6. Use the box and pan brake.	_____	_____	_____
7. Use the slip roll forming machine.	_____	_____	_____
8. Use the crimping and beading machine.	_____	_____	_____
9. Use the rolling machine.	_____	_____	_____

Evaluator's Comments:

Evaluator's Signature _____

Apprentice's Signature _____

Date competency completed _____

FASTENERS

COMPETENCIES:

1. Select and use appropriate fastening hardware.
2. Solder and spot weld metals.
3. Use seams to join two pieces of metal.

APPLICATIONS:

	Can Perform (Apprentice Initial)	Can Perform (Supervisor Initial)	N/A
1. Install and remove four types of fasteners.	_____	_____	_____
2. Use sheet metal rivets.	_____	_____	_____
3. Use pop rivets.	_____	_____	_____
4. Select the appropriate fastener for a job.	_____	_____	_____
5. Clean and shape a soldering copper.	_____	_____	_____
6. Tin a soldering copper.	_____	_____	_____
7. Tack a solder to hold two pieces in a selected position.	_____	_____	_____
8. Solder a lap seam in a flat position.	_____	_____	_____
9. Solder a vertical seam.	_____	_____	_____
10. Prepare and solder a work piece of aluminum alloy.	_____	_____	_____
11. Adjust the tong on a resistance spot welder.	_____	_____	_____
12. Spot weld two pieces of sheet metal.	_____	_____	_____
13. Clean spot welding tips.	_____	_____	_____
14. Form the following edges:			
- Single hem	_____	_____	_____
- Double hem	_____	_____	_____
- Wired edge	_____	_____	_____

15. Form three of the following seams: Pittsburgh seam, lap seam, riveted corner seam, pocket lock seam, grooved seam, or standing seam. (Circle seams formed.) _____ _____ _____

16. Demonstrate the ability to form two of the following locks: government lock, common lock, pocket lock. (Circle locks formed.) _____ _____ _____

17. Demonstrate the ability to use the following connectors:
    - Drive cleat _____ _____ _____
    - "S" cleat _____ _____ _____

Evaluator's Comments:

Evaluator's Signature _____

Apprentice's Signature _____

Date competency completed _____

WELDING

COMPETENCIES:

1. Use welding equipment and materials safely.
2. Set up and clean oxyacetylene welding equipment.
3. Cut, weld, and solder using oxyacetylene welding equipment.
4. Brace with oxyacetylene welding equipment in all positions.
5. Select, prepare, adjust and operate metallic inert gas welders (MIG).
6. Select, prepare, adjust, and operate tungsten inert gas welders (TIG).

APPLICATIONS:	Can Perform (Apprentice Initial)	Can Perform (Supervisor Initial)	N/A
1. Set up an oxyacetylene welding system.	_____	_____	_____
2. Clean an oxyacetylene welding system.	_____	_____	_____
3. Test an oxyacetylene welding system.	_____	_____	_____
4. Light and extinguish the cutting torch.	_____	_____	_____
5. Bleed the lines on an oxyacetylene welding system.	_____	_____	_____
6. Select filler rod and flux correctly according to the job.	_____	_____	_____
7. Make straight cuts on carbon steel plate.	_____	_____	_____
8. Braze ferrous metal.	_____	_____	_____
9. Braze non-ferrous metal.	_____	_____	_____
10. Use different size tips for an oxyacetylene torch.	_____	_____	_____
11. Weld in a vertical (up/down) position.	_____	_____	_____

12. Weld in a horizontal position.	_____	_____	_____
13. Weld in an overhead position.	_____	_____	_____
14. Weld in a flat position.	_____	_____	_____
15. Weld stainless steel with shielded metal arc welding equipment.	_____	_____	_____
16. Prepare, adjust and operate an MIG welder.	_____	_____	_____
17. Prepare, adjust and operate a TIG welder.	_____	_____	_____
18. Strike an arc with a MIG welder.	_____	_____	_____
19. Strike an arc with a TIG welder.	_____	_____	_____
20. Use a stick electrode.	_____	_____	_____
21. Use a plasma welder.	_____	_____	_____
22. Weld on plastic.	_____	_____	_____

Evaluator's Comments:

Evaluator's Signature _____

Apprentice's Signature _____

Date competency completed _____

RIGGING

COMPETENCIES:

1. Use rope, chains, slings, cables and climbing devices safely.
2. Follow hand signals.
3. Move heavy equipment safely.
4. Use lifting devices properly.
5. Rig various types of scaffolding.

APPLICATIONS:	Can Perform (Apprentice Initial)	Can Perform (Supervisor Initial)	N/A
1. Tie the following knots:			
- reef knot	_____	_____	_____
- bowline knot	_____	_____	_____
- timber hitch	_____	_____	_____
- scaffold hitch	_____	_____	_____
2. Splice rope using an eyesplice and a crown knot with a back splice.	_____	_____	_____
3. Use a personnel lift safely.	_____	_____	_____
4. use a materials lift safely.	_____	_____	_____
5. Use a scissors lift safely.	_____	_____	_____
6. Rig a piece of scaffolding.	_____	_____	_____

Evaluator's Comments:

Evaluator's Signature _____

Apprentice's Signature _____

Date competency completed _____

431

INSTALLATION

COMPETENCY:

Correctly install completed projects.

APPLICATIONS:	Can Perform (Apprentice Initial)	Can Perform (Supervisor Initial)	N/A
1. Move plant equipment to the point of installation.	_____	_____	_____
2. Assemble appropriate equipment needed for installing a project.	_____	_____	_____
3. Install hangers.	_____	_____	_____
4. Obtain a welding permit.	_____	_____	_____
5. Obtain a burning permit.	_____	_____	_____
6. Set up a fire watch.	_____	_____	_____

Evaluator's Comments:

Evaluator's Signature _____

Apprentice's Signature _____

Date competency completed _____

REPAIR

COMPETENCY:

Repair or place damaged sheet metal products.

APPLICATIONS:	Can Perform (Apprentice Initial)	Can Perform (Supervisor Initial)	N/A
1. Repair ductwork.	_____	_____	_____
2. Replace a rusted guard.	_____	_____	_____
3. Examine a damaged exhaust system. Determine whether it should be repaired or replaced.	_____	_____	_____
4. Replace a worn shield.	_____	_____	_____

Evaluator's Comments:

Evaluator's Signature _____

Apprentice's Signature _____

Date competency completed _____

15.816.150.219

INDUSTRIAL SHEET METAL APPRENTICE CURRICULUM

Apprentice Guide

INDUSTRIAL SHEET METAL APPRENTICE CURRICULUM

APPRENTICE GUIDE

WISCONSIN TECHNICAL COLLEGE SYSTEM
JUNE, 1989

TABLE OF CONTENTS

SAFETY

- GENERAL SAFETY PRECAUTIONS
- OSHA STANDARDS
- SAFETY DEVICES

GENERAL SAFETY PRECAUTIONS

COMPETENCIES:

Follow general safety precautions.
Practice proper housekeeping procedures.

OBJECTIVES:

1. Arrange in order the steps in lifting safely.
2. Identify proper clothing, eye protection, head protection, ear protection, foot protection, and hand protection.
3. Outline general housekeeping precautions.
4. Point out the ways you can practice personal safety.
5. Describe the importance of maintaining tools used in the trade.
6. Discuss the importance of proper ventilation.
7. List rules for electrical safety.
8. Make safety suggestions for your work place.
9. Identify lockout procedures.
10. Explain proper tank entry procedures.
11. Summarize common causes of on-the-job accidents.

LEARNING ACTIVITIES:

1. READ "Shop Safety Rules" from the Short Course in Sheet Metal Shop Theory by Richard Budzik, pages 2 and 3.

2. COMPLETE questions 1-10 on page 3 of the Short Course in Sheet Metal Shop Theory. Check your answers with another student or your instructor. REVIEW any answers you missed.

3. READ the Safety on the Job information sheet.

4. STUDY the Classroom/Shop Safety Rules information sheet.

5. CREATE a safety poster.

6. PARTICIPATE in a lecture/discussion on shop safety rules.

7. OPTIONAL: VIEW the videotapes on safety as assigned by your instructor.

8. PRACTICE lifting and carrying materials.

9. COMPLETE the Safety Suggestions assignment sheet.

APPLICATIONS:

1. Clean work area.
2. Wear appropriate protective clothing.
3. Use safety glasses or face shields.
4. Store and clean tools properly.
5. Follow lockout procedures.
6. Follow proper tank entry procedures.

EVALUATION/CHECK OUT:

1. Submit the Safety Suggestions assignment sheet.
2. Submit your Applications Checklist.
3. Demonstrate your knowledge of the objectives in a test situation.

INFORMATION SHEET

SAFETY ON THE JOB

Having the proper safety attitude is necessary in a sheet metal shop, because the worker is constantly exposed to hazardous equipment and substances. Most accidents are caused by thoughtlessness.

Safe working practices allow for:

- The elimination of pain or discomfort from personal injury
- The elimination of the loss of equipment or the expense of repair
- The elimination of lost time and lost wages
- The psychological well being of all employees
- Higher productivity

COMMON CAUSES OF ACCIDENTS

1. Accidents are often caused because the conditions are UNSAFE. A tool, machine, or other piece of equipment may have been improperly designed, installed or maintained.

2. Sometimes accidents are caused because a commonly accepted safety practice has been violated. For example, an employee may remove a machinery guard, throw material instead of carrying it, or use improper lifting techniques.

3. Finally, accidents can result from a combination of causes. An unsafe condition combined with an unsafe action causes the majority of accidents. For example the unguarded blade or a metal shear usually does not, in itself, cause an accident, but when a worker leaves a hand under the descending knife, the combination results in injury.

PERSONAL SAFETY

Practice the following requirements for personal safety:

1. Avoid wearing extra-loose shirts, trousers or overalls. Clothing should be loose enough to allow comfortable movement, but not baggy enough to catch in rotating machinery.

2. Do not wear neckties or belts with long loose ends. They could catch in rotating equipment and cause serious injury.

3. Wear appropriate foot wear. Usually steel toed shoes and heavy socks are recommended. Avoid wearing tennis shoes.

4. Do not wear rings, watches or other forms of jewelry, especially loose hanging jewelry because it can get caught in moving machinery or contact a live circuit and cause serious injury.

5. Wear a hard hat on the job site. Wear a cap when working around moving parts to keep hair from getting caught in machinery.

6. Wear gloves with long gauntlets when welding, but do not wear gloves around machinery or rotating parts.

7. Wear safety goggles when grinding or polishing or using striking tools.

8. Wear goggles or a hood when welding or cutting.

9. Wear a shirt with the sleeves cut off or rolled above the elbows.

10. Wear ear plugs when working in noisy areas.

VENTILATION

Standard air requirements for buildings must always be met. Where the natural ventilation is not sufficient to remove dust, fumes or vapors that will create or constitute a hazard, additional means of removal should be provided. In lieu of a general ventilating system, local exhaust, or blower units may be installed on the dust or fume producing machine, provided the required protection is secured thereby.

HOUSEKEEPING

Follow these housekeeping safety rules:

1. Keep tools and materials out of passageways when working with them; return tools and materials to proper storage areas when you're through with them.

2. Stack materials neatly away from passageways, walkways, electrical outlets and work areas.

3. Place scrap that can't be used in a trash can; return materials that can still be used to stock.

4. Keep oily rags in a closed metal container. Dispose of oily rags that will not be used again and be sure to place them in a proper receptacle.

5. Wipe up spilled oil, grease, or other slippery substances from the floor.

6. Keep paint, thinners and other flammable materials in a metal cabinet.

7. Keep all machines and tools clean and in good working order.

8. Do not use compressed air to clean machines of metal chips and cutting oil.

9. Inspect electrical cords and plugs before using them and do not carelessly pull or drag and electrical cord when using it.

ASSIGNMENT SHEET

SAFETY SUGGESTIONS

Directions: Look around your place of employment. Observe those safety rules that are followed. Make note of any rules that are not followed. Analyze safety practices where you work by answering the following questions.

1. The following safety practices are always followed: (Give examples of three or four.)

A. _____

B. _____

C. _____

D. _____

2. Describe two unsafe situations where you work.

A. _____

_____

_____

B. _____

_____

_____

3. Make three safety suggestions for your work site.

A. _____

_____

_____

B. _____

_____

_____

C. _____

_____

_____

INFORMATION SHEET

CLASSROOM/SHOP SAFETY RULES

Follow these rules when working in your school lab.

1. Work at your assigned work station only.

2. Always use the correct tools for each operation.

3. Keep all tools and machines in good order.

4. DO NOT talk to a person when operating a machine.

5. Always turn off the machine, even if you are leaving it for a moment.

6. The following are dangerous when near any moving machinery:
   - -finger rings
   - -neckties
   - -wrist watches
   - -watch chains
   - -open shirt sleeve
   - -loose clothing
   - -loose long hair

7. Make sure you have the correct amount of lighting and ventilation.

8. When finished, leave your work place clean and orderly.

9. Both material and time are expensive--be economical with both.

10. When in doubt, ask your instructor, NEVER be careless.

11. Protect your eyes with safety glasses.

12. Observe all of these safety obligations everyday.

REMEMBER, SAFETY FIRST, LAST, AND ALWAYS.

OSHA STANDARDS

COMPETENCY:

Follow OSHA, state and federal safety codes.

OBJECTIVES:

1. Identify OSHA requirements for an employer and employee.
2. Outline the process for OSHA enforcement of safety standards.
3. Identify state and federal safety codes relevant to your industry.
4. Explain the enactment of the OSHA act.

LEARNING ACTIVITIES:

1. READ the Employer and Employee Requirements information sheet.

2. READ the OSHA Poster #2203.

3. PARTICIPATE in a class discussion on OSHA.

4. COMPLETE an OSHA codes class.

5. ATTEND a presentation by an OSHA representative.

6. DISCUSS the state and federal safety codes appropriate to your profession.

7. OPTIONAL: VIEW the videotape on OSHA requirements.

EVALUATION/CHECK OUT:

1. Attend a presentation by an OSHA representative.
2. Demonstrate your knowledge of the objectives in a test situation.

INFORMATION SHEET

EMPLOYER AND EMPLOYEE REQUIREMENTS

OSHA stands for the Occupational Safety and Health Administration. The Occupation Safety and Health Act was passed in 1970. The law assures every working man or woman in the nation safe and healthful working conditions and the safekeeping of our human resources. The law also organized accident prevention programs in school shops.

WHAT OSHA EXPECTS OF AN EMPLOYER

1. To provide a hazard-free work place and comply with occupational safety and health standards.

2. To inspect job sites to assure they meet safety standards.

3. To use properly color-coded signs to warn of danger.

4. To keep required records of work-related injuries and to post an annual summary in February of each year.

5. To report within 48 hours to OSHA any accident which is fatal or hospitalizes 5 or more workers.

6. To post in a prominent place OSHA poster #2203 informing workers of their rights and responsibilities.

WHAT OSHA EXPECTS OF AN EMPLOYEE

1. To read the OSHA poster #2203 and comply with its standards.

2. To follow employer safety and health rules and wear prescribed clothing or protective clothing on the job.

3. To report hazardous conditions to a supervisor.

4. To report all job-related injuries to a supervisor and seek prompt treatment if required.

5. Report to OSHA in a responsible manner any hazardous working situations which you feel the employer has not attended to properly.

OSHA Poster #2203

job safety and health protection

The Occupational Safety and Health Act of 1970 provides job safety and health protection for workers through the promotion of safe and healthful working conditions throughout the Nation. Requirements of the Act include the following

Employers: Each employer shall furnish to each of his employees employment and a place of employment free from recognized hazards that are causing or are likely to cause death or serious harm to his employees; and shall comply with occupational safety and health standards issued under the Act.

Employees: Each employee shall comply with all occupational safety and health standards, rules, regulations and orders issued under the Act that apply to his own actions and conduct on the job.

The Occupational Safety and Health Administration (OSHA) of the Department of Labor has the primary responsibility for administering the Act. OSHA issues occupational safety and health standards, and its Compliance Safety and Health Officers conduct jobsite inspections to ensure compliance with the Act

Inspection: The Act requires that a representative of the employer and a representative authorized by the employees be given an opportunity to accompany the OSHA inspector for the purpose of aiding the inspection

Where there is no authorized employee representative, the OSHA Compliance Officer must consult with a reasonable number of employees concerning safety and health conditions in the workplace

Complaint: Employees or their representatives have the right to file a complaint with the nearest OSHA office requesting an inspection if they believe unsafe or unhealthful conditions exist in their workplace. OSHA will withhold, on request, names of employees complaining

The Act provides that employees may not be discharged or discriminated against in any way for filing safety and health complaints or otherwise exercising their rights under the Act

An employee who believes he has been discriminated against may file a complaint with the nearest OSHA office within 30 days of the alleged discrimination

Citation: If upon inspection OSHA believes an employer has violated the Act, a citation alleging such violations will be issued to the employer. Each citation will specify a time period within which the alleged violation must be corrected

The OSHA citation must be prominently displayed at or near the place of alleged violation for three days, or until it is corrected, whichever is later, to warn employees of dangers that may exist there.

Proposed Penalty: The Act provides for mandatory penalties against employers of up to $1,000 for each serious violation and for optional penalties of up to $1,000 for each nonserious violation. Penalties of up to $1,000 per day may be proposed for failure to correct violations within the proposed time period. Also, any employer who willfully or repeatedly violates the Act may be assessed penalties of up to $10,000 for each such violation.

Criminal penalties are also provided for in the Act. Any willful violation resulting in death of an employee, upon conviction, is punishable by a fine of not more than $10,000 or by imprisonment for not more that six months, or by both. Conviction of an employer after a first conviction doubles these maximum penalties

Voluntary Activity: While providing penalties for violations, the Act also encourages efforts by labor and management, before an OSHA inspection, to reduce injuries and illnesses arising out of employment.

The Department of Labor encourages employers and employees to reduce workplace hazards voluntarily and to develop and improve safety and health programs in all workplaces and industries

Such cooperative action would initially focus on the identification and elimination of hazards that could cause death, injury, or illness to employees and supervisors. There are many public and private organizations that can provide information and assistance in this effort, if requested

More Information: Additional information and copies of the Act, specific OSHA safety and health standards, and other applicable regulations may be obtained from your employer or from the nearest OSHA Regional Office in the following locations:

Atlanta, Georgia
Boston, Massachusetts
Chicago, Illinois
Dallas, Texas
Denver, Colorado
Kansas City, Missouri
New York, New York
Philadelphia, Pennsylvania
San Francisco, California
Seattle, Washington

Telephone numbers for these offices and additional Area Office locations are listed in the telephone directory under the United States Department of Labor in the United States Government listing

Washington, D.C.
1981
OSHA 2203

Raymond J. Donovan
Secretary of Labor

U.S. Department of Labor
Occupational Safety and Health Administration

BEST COPY AVAILABLE

SAFETY DEVICES

COMPETENCY:

Use safety devices.

OBJECTIVES:

1. Differentiate between types of fire extinguishers and their uses.
2. Explain how to operate different types of fire extinguishers.
3. Explain evacuation procedures in the event of a fire.
4. Identify different classifications of fires.
5. Use personal safety devices.
6. Identify the purpose for guards on machinery.
7. List the mechanisms that require guards.

LEARNING ACTIVITIES:

1. READ the Fire Extinguishers Information Sheet.

2. STUDY the Fire Safety Information Sheet.

3. COMPLETE the Building Evacuation Assignment Sheet.

4. OPTIONAL: VIEW the tape on Fire Safety.

5. PARTICIPATE in a lecture/discussion on fire safety. WATCH your instructor demonstrate the different types of fire extinguishers.

6. READ the Guards information sheet.

EVALUATION/CHECK OUT:

1. Submit your Building Evacuation Assignment Sheet.
2. Demonstrate your knowledge of the objectives in a test situation.

ASSIGNMENT SHEET

FIRE EXTINGUISHERS

GENERAL RULES FOR FIRE SAFETY

1. Report immediately anything that might indicate a potential fire hazard.
2. Know the location and the proper operation of fire extinguishers and make sure they have been checked recently.
3. Know where the nearest telephone is and make sure the number of the nearest fire department is listed on the phone.
4. Know the procedure for evacuating the building and the location of all exits in case one or more exits are blocked.
5. Smoke only in authorized areas and make sure cigarette butts are completely extinguished and properly discarded.
6. Examine materials and equipment around the work place to determine what type or types of fires might occur, then make sure available fire extinguishers are correct for the classes of fires that might occur.
7. Isolate combustible materials in fire-resistant areas.
8. Dispose of rubbish regularly.
9. Conduct fire drills at regular intervals to make sure the alarm can be heard over shop noises and that everyone knows evacuation routes, exits and assembly points.

CLASSES OF FIRES

CLASS A FIRES: Result from ordinary combustibles such as wood, paper or cloth.

CLASS B FIRES: Result from flammable liquids such as gasoline, oil, paints, solvents or grease.

CLASS C FIRES: Result from electrical wires, switches, or motors.

TYPES OF FIRE EXTINGUISHERS

FOAM — Foam fire extinguishers are recommended for class A and class B fires. To use turn the extinguisher upside down. Don't spray stream into the burning liquid. Allow foam to fall lightly on the fire.

CARBON DIOXIDE	Carbon dioxide fire extinguishers are recommended for class B and C fires. To use, squeeze the handle. Direct discharge as close to the fire as possible, first at the edge of the flames, then gradually forward and upward.
SODA ACID	Soda Acid fire extinguishers are recommended only for class A fires. To use, turn the extinguisher upside down. Direct stream at the base of the fire.
WATER	Water is recommended for class A fires. To use a water fire extinguisher, squeeze the handle and spray at the base of the fire. (A water hose or bucket may also be used.)
CHEMICAL	Chemical fire extinguishers are recommended for all classes of fires. To use, squeeze the handle and direct at the base of the flames. With a class A fire, follow up by directing the chemicals at the remaining material that is burning.

BUILDING EVACUATION RULES

1. Close all windows and doors as you leave the building.
2. Leave the building quickly but orderly.
3. Know the best route to take when leaving the building, but also know alternate routes.
4. Move away from the building during a fire.

INFORMATION SHEET

FIRE SAFETY

KIND OF FIRE	APPROVED TYPE OF EXTINGUISHER						
DECIDE THE CLASS OF FIRE YOU ARE FIGHTING. . . ↓	. . .THEN CHECK THE COLUMNS TO THE RIGHT OF THAT CLASS →	MATCH UP PROPER EXTINGUISHER WITH CLASS OF FIRE SHOWN AT LEFT						
		FOAM Solution of Aluminum Sulphate and Bicarbonate of Soda	CARBON DIOXIDE Carbon Dioxide Gas Under Pressure	SODA ACID Bicarbonate of Soda Solution and Sulphuric Acid	PUMP TANK Plain Water	GAS CARTRIDGE Water Expelled by Carbon Dioxide Gas	MULTI-PURPOSE DRY CHEMICAL	ORDINARY DRY CHEMICAL
A — CLASS A FIRES — USE THESE EXTINGUISHERS → — ORDINARY COMBUSTIBLES • WOOD • PAPER • CLOTH ETC.		A B	X	A	A	A	A B C	X
B — CLASS B FIRES — USE THESE EXTINGUISHERS → — FLAMMABLE LIQUIDS, GREASE • GASOLINE • PAINTS • OILS, ETC.		A B	B C	X	X	X	A B C	B C
C — CLASS C FIRES — USE THESE EXTINGUISHERS → — ELECTRICAL EQUIPMENT • MOTORS • SWITCHES ETC.		X	B C	X	X	X	A B C	B C

ASSIGNMENT SHEET

BUILDING EVACUATION

Directions: Draw a sketch of your work place. Include such details as hallways, doorways, fire escapes, windows, stairways, and other important features. Use a dark pen to draw the building, a read pen to draw dotted lines and arrows showing the best paths to take when leaving the building during a fire. Write any notes on the drawing you feel might tell a person what to do during a fire.

Indicate the location of fire extinguishers and the type of fire that might erupt in various work places.

INFORMATION SHEET

GUARDS

REASONS FOR GUARDS

The use of guards cannot be overlooked when one is concerned about safety. The basic purpose of mechanical guarding is to protect against and prevent injury from these sources:

- Persons making contact with moving parts of machines.
- Work in process making contact with personnel.
- Mechanical failure.
- Electrical failure.
- Human failure resulting from curiosity, zeal, distraction, fatigue, worry, anger, or illness.

TYPES OF MACHINES NEEDING GUARDS

1. Rotating mechanisms.

Rotating mechanisms are dangerous unless they are guarded. Examples included flywheels, pulleys, belts, and clutches. Although relatively few injuries are caused by such mechanisms, they are usually permanently disabling.

2. Cutting or shearing mechanisms.

Cutting and shearing mechanisms are dangerous at the points where a rotary cutting action is used or where the moving parts of a reciprocating mechanism approach or cross a fixed object. Examples include band and circular saws, milling machines, grinding machines and drilling and boring machines.

3. Inrunning nip points.

This danger of an inrunning nip point is that is draws objects in and flattens them. Once an object is engaged, it is difficult, if not impossible to withdraw it. Examples include the point of contact between a belt and pulley, chain and sprocket and gear and rack.

4. Screw or worm mechanism.

If a person or object is caught in a screw or worm mechanism a mangling or battering action takes place. Example include screw conveyers and grinders of various types.

5. Forming or bending mechanisms.

Forming and bending machines are used for standing and forming pieces of metal. They account for the most hand and finger injuries. Examples include power presses, foot and hand presses, press brakes, metal shears, forging machines,

and bending presses.

TYPES OF GUARDS

To eliminate the danger from the machines mentioned previously, guards may be built and installed over the hazardous areas, or the equipment may be originally designed to have no dangerous parts exposed.

Guards may be installed at the point of operation and/or the source of power.

The preferred material for guards, under most circumstances is metal. An important factor in the design of a guard is the maximum size of openings to be permitted in it. If a guard is to provide complete protection, the openings must be large enough to admit the stock, but small enough to prevent a person or object from getting into the danger zone.

Devices to control delivery of power at the source include electrical switches and numerous varieties of valves, regulators, and metering devices. The metering devices are used to open, shut or otherwise control the flow and pressure of steam, pneumatic, and hydraulic media that energize machinery.

COMMUNICATION

- COMMUNICATION BASICS
- LISTENING AND COMMUNICATION BARRIERS
- COMMUNICATION SKILLS EVALUATION

COMMUNICATION BASICS

COMPETENCY:

Communicate effectively with management, co-workers, and customers.

OBJECTIVES:

1. Define communication.
2. Identify a model of communication.
3. Explain the importance of good communication in work settings.
4. Define the term feedback.
5. Identify the value of positive feedback.
6. Summarize the value of negative feedback.
7. List four guidelines one should follow to respond appropriately to criticism.
8. List the three communication codes.
9. Define the term channel.
10. Discuss how noise effects the communication process.
11. Recognize the abilities of co-workers.
12. Act professionally on the job.

LEARNING ACTIVITIES:

1. READ the Definition of Communication information sheet.

2. COMPLETE the Interpersonal Gap assignment sheet.

3. COMPLETE the Feedback Collection and Analysis assignment sheet.

4. COMPLETE the What is Your Feedback Opinion? assignment sheet.

5. PARTICIPATE in class lectures and discussion on communication.

EVALUATION/CHECK OUT:

1. Submit your Interpersonal Gap assignment sheet.
2. Submit you Feedback Collection and Analysis assignment sheet.
3. Submit your What is Your Feedback Opinion? assignment sheet.
4. Demonstrate your knowledge of the objectives in a test situation.

INFORMATION SHEET

DEFINITION OF COMMUNICATION

Communication is the process of people sharing thoughts, ideas and feeling with each other in commonly understandable ways. Communication is a frequent, everyday activity. In fact, probably over 12 hours in your day are spent in some form of communication: reading, writing, talking, or listening. Of that time, 75 percent or more will be spent in face-to-face communication through talking and listening.

SENDER AND RECEIVER:

Communication takes place between a sender and receiver. Actually, during most of our conversation we are both sending and receiving simultaneously. Think, for example, of conversations between journeymen and apprentices. When journeymen initiate the conversation, they are the senders and the apprentices are the receivers. However, when the apprentice responds, the journeymen become the receivers and the apprentices are the senders.

STIMULUS AND MOTIVATION:

Two things must happen before the sender even wants to send a message. First, the sender must be stimulated. Some types of stimulus triggers a thought, which in turn triggers the desire to communicate. A stimulus can be either internal or external, for example:

Internal: an example may be remembering to call someone.
External: an example may be an awkward silence in a conversation.

Stimulus alone is not enough to initiate communication. The second requirement to send a message is sufficient motivation. Think of a time your supervisor has asked for a recommendation concerning a sheet metal project. And you felt that you had a strong recommendation to provide. However, you refrained from providing it because you knew that it would not meet the supervisors satisfaction. In this example, the stimulus was very strong yet the motivation was lacking. You saw greater benefit in not answering. The importance of there two steps - stimulation and motivation - cannot be overlooked.

ENCODING AND DECODING:

After being stimulated and motivated to communicate, the sender must decide how best to convey a message to the specific receiver. The process of putting a message into the form in which it is to be communicated is called encoding. When the encoder's message is picked up, the receiver tries to make sense out of it, or decode it. Decoding is the process the receiver goes through in trying to interpret the exact meaning of a message.

For example, when a supervisor finds it necessary to reprimand an apprentice, encoding becomes very important. When encoding the message, the supervisor considers such factors as: the type of words they will use, the volume of their voice used or what facial expressions will be used. When the apprentice receives the reprimand the apprentice might consider such questions as: How serious a mistake have I made? Maybe they just don't like me. Am I going to be fired? Will they report this to my instructor at school?

FRAME OF REFERENCE:

Many communication breakdowns occur here. Whether you are communicating with only one person, with a small group, or with many people, the same basic process occurs and the same misunderstandings can arise. As a sender you use your own background and experience to encode messages. But receivers use their own background and experiences to decode those messages. Unless the backgrounds and experiences, called the frames of reference, of both sender and receiver are compatible, problems may develop in accurately encoding and decoding messages. Areas such as education, race, sex, parents, and past experiences all affect our frame of reference.

THE INTERPERSONAL GAP:

Effective communication exists between two people when the receiver interprets the sender's message in the way the sender intended. But we don't always communicate the meaning we intend. Perhaps the most common kind of communication failure results when the receiver interprets the meaning of a message in different way than is intended by the sender. The term used to describe this communication failure is interpersonal gap.

Interpersonal gap, then, refers to the difference between the meaning one person intends to convey and the actual effect of that person's messages or actions on another. For example, imagine that a co-worker needed your help with a particular project. You gave assistance with the project and then

continued to help the person when you felt your assistance was needed. You thought you were doing your co-worker a favor. However, your co-worker decoded your actions as meaning he was incompetent by always needing help. Your system does not match his system of decoding, and the consequent interpersonal gap is difficult to bridge. Interpersonal gaps occur when one's intentions do not match up with the effects inside another.

The key terms used to make sense of the interpersonal gap are intentions, actions, and effects.

Intentions may be defined as wishes, wants, hopes, desires, and fears that give rise to actions. Intentions may be defined as underlying motives of which you may be unaware.

Here are some examples of interpersonal intentions:

- "I want him to like my project."
- "I want him to realize that I know a great deal about this area of work."

Intentions may also be mixed:

- "I want him to know I respect him as a teacher, but I do not want to look like it's only because I want a good review on my project."
- "I want him to tell me I am doing a good job, but I do not want to ask for it."

Intentions are private and are known directly only to the one who experiences them. The sender knows their own intentions and can only be inferred by the receiver.

Actions may be defined as attempts by the sender to convey a message, whether or not it is received, as well as ways the receiver responds to the message, whether or not the sender intended it to be received that way.

In contrast to interpersonal intentions and effects, which are private, actions are observable, they may be verbal (saying "good morning"), or nonverbal (looking away when passing another), brief (a touch on the shoulder), or extended (taking a person out to dinner).

If there was only one way to express something, life would be easier. Because different people use different codes, actions have no unique and constant meaning, but are interchangeable.

In order to avoid an interpersonal gap, remember, the same intention may be expressed by different actions. For example, if your intention is to impress your instructor, you may express that through several actions. You might do extra

assignments, stay after class, or show interest in what they do outside of the classroom. On the other hand, different intentions may be expressed by the same action. You might stay after class for any one of a number of intentions: to finish up work, to talk with a friend, or to wait for a ride, to name a few.

The term <u>effects</u> in this context refers to a person's inner response to the actions of another. The sender may assume that he/she know the receiver's feelings that are aroused by their actions. However, feelings are a very private possession. You could not possibly know what feelings are being expressed unless the receiver told you.

What makes an interpersonal gap even more likely is that the same action may lead to different effects. For example, if your journeyman took you out for coffee, his action may create one of several effect inside of you:

- You may feel uneasy and think, "I wonder what my journeyman really wants from me?"
- You may enjoy it and think, "This guy is great to work with."

Several different actions may create the same effect inside another. If the effect inside of Bill is that he feels proud and happy and thinks, "My journeyman recognized my competence and ability," it may have been caused by one of several actions on the journeyman's part:

- The journeyman told Bill that he has been doing an excellent job.
- The journeyman asked Bill for advice.

We can now draw a more complete picture of the interpersonal gap as follows.

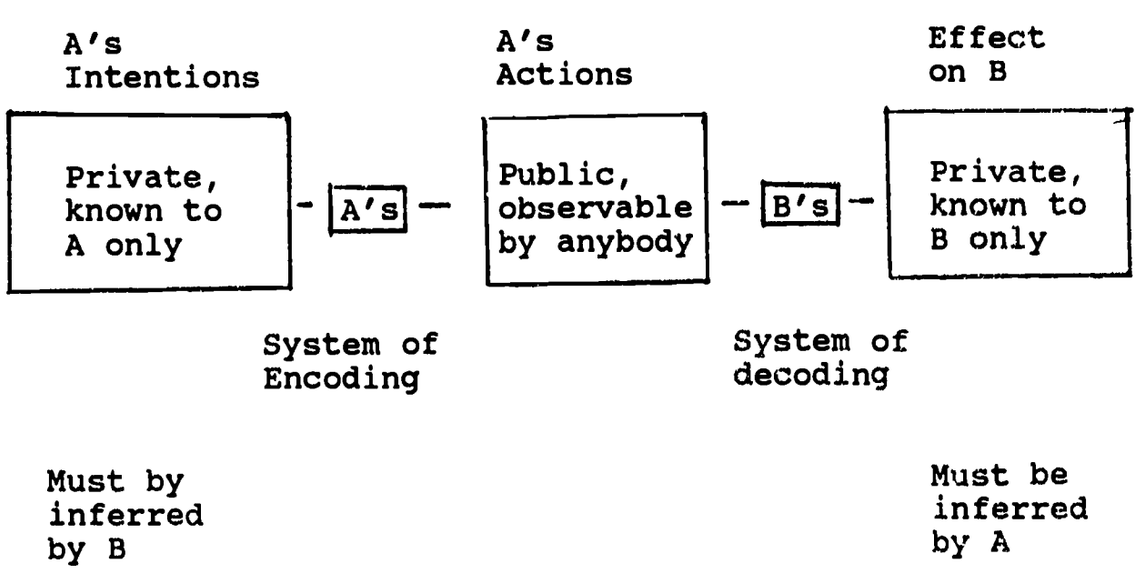

It would be wonderful if accurate and effective communication would just happen. The truth is as just explained, no matter how hard we try, we do not always communicate what we intend to.

CODE:

The code is not the message but the symbols that carry the message. There are three basic communication codes:

1. Nonverbal (55 percent): all intentional and unintentional means other than writing or speaking, by which a person sends a message, including such things as facial expressions, gestures, appearance, and posture.
2. Language (7 percent): either spoken or written words used to communicate thoughts and emotions.
3. Paralanguage (38 percent): the verbal elements that go along with spoken language, including such qualities of the voice as tone, pitch, rate, volume, and emphasis.

To communicate effectively the sender must communicate the same message by all three codes. However, many people either deliberately or unknowingly send conflicting messages. Whenever there is a conflict among the messages received, people tend to believe more of what they see than what they hear. For example, if you are asked to answer a question in the classroom and do not know the exact answer, your lack of eye contact and uneasiness may indicate to the instructor that you are not sure of the answer before you even begin to respond.

CHANNEL:

The success of your message may depend on the channel you select. A channel is the medium selected to carry the message. Some examples of communication channels are :

1. face-to-face discussion
2. memorandum
3. professional journals
4. newsletter
5. telephone
6. FAX

In deciding which channel is most appropriate for communication, consider the following items:

1. The importance of the message: Important messages usually require the face-to-face channel.
2. The needs and abilities of the receiver: Some people are able to work from memos and phone

conversations; others interpret messages better and are happier in face-to-face situations.

3. How much and how soon feedback is needed: Complicated messages needing immediate feedback require the face-to-face channel where all codes are present.
4. Whether a permanent record is necessary: Memos and written instructions can be used to verify a conversation and to serve as a permanent record of what was said. Memos are also appropriate when the receiver must analyze the sender's request before providing a response.
5. Whether formality or informality is desired: Although face-to-face communication can be quite formal, it is normally considered less formal than a newsletter or a memorandum. Journals and newsletters are informal, one way communication.
6. The importance of time: FAX is a communication method to send written or printed documents through the telephone. This method is faster than sending information through the mail.

The channel selected is also very important when communicating with the public. For example, suppose you are considering advising a customer on various options concerning a product. A face-to-face discussion would prove to be much more effective than a written correspondence. In other causes a written channel is more appropriate. If you are told to fabricate a new product, written procedure will be clearer and much more precise than face-to-face instructions passed on throughout the organization.

ENVIRONMENT:

The environment includes the time, place, physical and social surroundings in which the communicator find themselves. For example, the quality of your work may vary depending on the time of day. Communication is also affected by the physical environment. Such conditions as the size of your work area, the brightness of the lights, the room temperature, the noise level can alter the type and success of communication. Social environment refers to the relationships of people present. For example, apprentices may act differently at a social gathering if their journeyman is present.

NOISE:

Anything that interferes with communication and distorts or blocks the message is noise. External noise includes distractions in the environment, such as the speaker's poor grammar, phones ringing, hand tools and machines operating, people talking, or lights that are too bright or too dim.

Internal noise refers to conditions of the receiver, such as a headache, daydreaming, lack of sleep, or lack of knowledge on the topic being discussed. Any of these noises can distort or block communication.

INFORMATION SHEET

FEEDBACK

Feedback is evaluative information about you, your behavior, or the results of your behavior. It is information resulting from judgments made about you or something you did. When a person observes their own behavior and resolves to do better next time, when a person asks a friend to give an opinion on how well they have handled a certain situation, or when the journeyman suggest ways apprentices can improve their performance, feedback is being employed.

Feedback can be extremely valuable because it lets you know how you are doing. If you know what you are doing right, you can continue that behavior. If you know what you are doing wrong, you can change or modify that behavior in the future. Feedback is also the only way a person can know whether messages sent are interpreted as intended. Without feedback all one can do is assume that the messages have been received correctly.

Feedback comes from two sources. One place that feedback comes from is within yourself. Such feedback is called internal feedback. You are involved in the process of self-evaluation almost all the time. You also receive a great deal of feedback from the world around you. Feedback that comes from any source outside yourself is referred to as external feedback. This is the feedback that you get from your friends, instructor, journeyman, etc.

Feedback can either be positive or negative in nature. Positive feedback involves praise. It is very useful because it lets you know what your strengths are and where you are achieving success. Positive feedback is highly important because it reinforces the behavior that led to the praise. Negative feedback, on the other hand, involves criticism. Such feedback is usually father unpleasant to receive because it highlights your weaknesses instead of you strengths. It is probably the most valuable type of information, however, because it points out areas in which you need to change. Instead of reinforcing your behavior, criticism makes you want to change or modify your words and actions. If viewed properly, negative feedback can provide excellent guidelines for self-improvement.

Advantages of feedback:

1. Supervisors who encourage their employees to give feedback find that feedback increases the accuracy of employee understandings and performance. Misunderstandings often occur because apprentices

honestly think they have understood the journeyman's instructions so well that no feedback is necessary. The few seconds it would take to verify the assignment could save both time and money.

2. Feedback increases employee satisfaction with the job. Everyone likes to feel that their ideas and opinions are of value. When given the opportunity to ask questions or make suggestions, employees tend to feel more a part of the organization and are more willing to take some of the responsibility for accurate communication.

Disadvantages of feedback:

1. Feedback causes people to feel psychologically under attack when feedback seems negative or overwhelming. When judgements of good or bad, and right or wrong are avoided, it reduces the receiver's need to react defensively.

2. Feedback is time consuming. It does take time to make sure that everyone understands, but it takes more time to redo tasks that could have been accomplished correctly the first time.

3. Feedback is difficult to elicit. Many people seek feedback by asking "are there any questions?" Then they can't understand why no one ever has any questions. Asking others if they understand puts pressure on them to say, "Yes I do understand," even when the opposite may be true. When employees are afraid of appearing "stupid" in front of the supervisor, they will pretend to understand whether they do or not. Instead of asking apprentices if they understand, journeymen should ask them what they understand or tell them to summarize what has just been communicated.

Following are listed various suggestions to improve your use of feedback:

1. Tell people you want feedback. Let others know you consider feedback not only useful but necessary to improve your performance.

2. Identify the areas in which you want feedback, specify the topics in which you are most interested.

3. Encourage your journeyman to set aside time for regularly scheduled feedback sessions.

4. Use silence to encourage feedback. Remain silent for at least ten seconds after asking a question.

5. Watch for nonverbal responses.

6. Ask questions, do not assume anything.

7. Use statements that encourage feedback, "So, you feel that....."

A certain amount of criticism on the job is absolutely necessary. Criticism is used by your journeyman to let you know how you can improve your job performance. Criticism can be destructive or constructive depending on what you do with it.

Following are four guidelines that you should follow to respond to criticism in a constructive way.

1. Take the criticism seriously. Assume that the journeyman or instructor is right and that it will help you do a better job.

2. Admit your mistakes. Do not become defensive about your mistakes.

3. Maintain your self-control. Personal characteristics such as patience, cheerfulness, and sense of humor are very valuable in helping you to react properly to criticism.

4. Determine how you can improve. Try to learn something from the experience.

ASSIGNMENT SHEET

THE INTERPERSONAL GAP

In the columns provided below, write about an interpersonal gap that you have experienced at work within the last few weeks. Try to think of an example that had important consequences.

YOUR INTENTION What messages did you want to send?	YOUR ACTION What things did you do and say?	YOUR EFFECT ON PARTNER What was their interpretation and response?
1.		
2.		

ASSIGNMENT SHEET

FEEDBACK COLLECTION AND ANALYSIS

Record everything that is said or expressed to you during a course of three days that would consider to be feedback concerning you or your behavior. Classify each one as being either positive or negative in nature. Finally, indicate how that feedback you received made you feel, and how it will affect your actions in the future.

FEEDBACK RECEIVED	TYPE	EFFECT

ASSIGNMENT SHEET

WHAT IS YOUR FEEDBACK OPINION ?

In groups of four, discuss the following statements. Summarize your conclusion and be prepared to share the information with your classmates.

1. Basically, feedback is judgemental in nature.

2. You probably never encountered feedback before in your life.

3. Actually, feedback is of very little value.

4. In general, people rarely evaluate their own behavior.

5. A compliment would be an example of positive feedback.

6. Positive feedback is worthless because it doesn't teach you anything.

7. Negative feedback is usually rather unpleasant to receive.

8. Negative feedback only created poor attitudes.

9. At work, your journeyman has no right to criticize your performance as an employee.

10. At work, your journeyman has no right to criticize you as a person.

LISTENING AND COMMUNICATION BARRIERS

COMPETENCIES:

1. Receive oral messages accurately.
2. Overcome barriers to effective communication.

OBJECTIVES:

1. Differentiate between hearing and listening.
2. Describe the characteristics of good listening.
3. List barriers that reduce hearing effectiveness at work.
4. Analyze your own listening skills and suggest ways to improve them.
5. Identify barriers in the communication process.
6. Explain how the barriers can be overcome.
7. List rules for giving and receiving instructions.

LEARNING ACTIVITIES:

1. READ the Listening Information Sheet.

2. PARTICIPATE in a class discussion on the importance of listening in the workplace.

3. READ the Communication Barriers information sheet.

4. COMPLETE the Listening Skills Improvement Plan assignment sheet.

5. COMPLETE the Barriers Assignment Sheet.

APPLICATIONS:

Ask your supervisor to complete the Communication Skills assessment sheet.

EVALUATION/CHECK OUT:

1. Submit your Applications Checklist.
2. Submit your Listening Skills Improvement Plan.
3. Submit your Barriers assignment sheet.

INFORMATION SHEET

LISTENING

Good listening is a combination of hearing, comprehending, and remembering. Most people spend about 80% of their waking day engaged in some sort of communication: reading, writing, speaking, listening or viewing. About 45% of that communication time is spent listening. However, memory fades in a relative short period of time, so we ultimately remember less than one-fourth of what we originally heard. Most people have had no training in listening, despite the fact that we do so much of it.

Of all the communication skills you bring to your job, listening may well be one of the most important. If you cannot receive oral instructions and other messages accurately, speaking to you is of little use and communication fails.

Poor listening can result in costly problems:

- **Accidents that cause physical injury.** ("I didn't hear anyone say that this is a hard-hat area.")
- **Production breakdowns that result in lost time and money.** ("I didn't remember that the boss said I had to insert this from the right side.")
- **Lost sales and customers.** ("What's he so upset about? I'm sure he didn't say he needed it by Friday.")
- **Arguments and misunderstandings between workers.** ("I told you not to lay your tools there!")
- **Discontentment between workers and management.** ("I kept telling the boss that we could have saved time if we had combined the two steps into one. But no one listens to those of us who do the job!")

HEARING AND LISTENING

Hearing an oral message is not the same as understanding and remembering it. Hearing is a physical process. It involves a series of vibrations set in motion by your eardrum.

Listening involves more than just hearing sounds. Not only must a person hear the noise, but he/she must evaluate and understand it. Listening requires mental concentration, hearing does not. To listen effectively, you must focus you mind entirely on what is being said.

Another difference between hearing and listening is that listening is selective, hearing is not. Listening can be turned on and off, whereas hearing cannot be turned off.

BARRIERS TO EFFECTIVE LISTENING

With the listening efficiency rate of only 25% and knowing that most of what is heard is forgotten, think of the millions of dollars wasted in our country each year because people fail to listen. Sometime avoidable accidents are caused by someone's failure to listen. Such was the case in a plant when an employee noticed a puddle of oil that had been spilled on a walkway. The worker called it to the attention of the custodian who was busy filling out a form. The custodian "heard" the message, but he wasn't listening. The puddle did not get cleaned up, and an employee slipped on it, severely spraining his back.

Barriers that interfere with listening may be physical (something wrong with your hearing), but they are more likely to be psychological and result from attitudes, feelings, or lack of awareness. For example these barriers could be:

- Can't hear:	The P.A. system needs to be turned up.
- Don't hear:	The speaker mumbles.
- Won't hear:	He never says anything important.
- Can't understand:	I don't know what she means by that.
- Don't understand:	Why push this button before beginning?
- Won't understand:	I never did like welding.

THE LISTENING PROCESS

Listening involves four distinct processes:

1. Perception: Pay attention to all parts of the message. Be aware of both verbal and nonverbal messages.

2. Comprehension: Determine the meaning of the message. What is the intent of the speaker?

3. Evaluation: Ask questions to make sure you understand the message correctly. Assess the message. Do you need more information?

4. Response: Give verbal and nonverbal responses while listening (nodding head, saying "okay," "I see," etc.). Respond to the entire message after it is completed.

The most commonly recognized problems in listening grow out of one of these processes. Anyone can become a good listener. However improvement involves self-discipline, concentration, and practice. Keep the following principles in mind.

KEYS TO EFFECTIVE LISTENING	THE BAD LISTENER	THE GOOD LISTENER
1. Find areas of interest	Tunes out dry subjects	Asks, "What's in it for me?
2. Judge content not delivery	Tunes out if delivery is poor	Judges content, skips over delivery errors
3. Hold your fire	Tends to enter into argument	Doesn't judge until comprehension is complete
4. Listen for ideas	Listens for facts	Listens for central themes
5. Be flexible	Takes intensive notes using only one system	Takes fewer notes. Uses 4-5 different systems, depending on speaker
6. Work at listening	Shows no energy output, fakes attention	Works hard, exhibits active body state
7. Resist distractions	Distracted easily	Fights or avoids distractions, knows how to concentrate
8. Exercise your mind	Resists difficult material	Uses hard to understand material to exercise mind
9. Keep your mind	Reacts to emotional words	Interprets emotional words, does not get hung up on them
10. Capitalize on fact thought is faster than speech	Tends to daydream with slow speakers	Challenges, anticipates, summarizes and listens to tone of voice.

HOW TO BECOME A GOOD LISTENER

1. Avoid mind wandering. People can listen and think approximately four times as fast as the average person can speak. Therefore, listeners have plenty of time to evaluate and understand what is being said. Often this time is misused by allowing the mind to become distracted instead of

using the time productively. Use this time to analyze what the speaker is saying and anticipate what is going to be said next.

2. Tune in. Sometimes in a conversation, the speaker says something we don't agree with. Immediately we quit listening and start thinking about a rebuttal. Meanwhile we may have missed a statement that is essential to understanding what is being said. One way to avoid this trap is to be aware that it exists and be prepared for it. You might try writing the main points of what the speaker is saying or repeat back to the speaker what you understood him or her to say. "Let me make sure that I understand you; you say that ..." Paraphrasing in this manner forces you to concentrate on what the speaker has said rather than on what you will say to refute it.

3. Anticipate. Mentally stay one jump ahead of the speaker. What will the speaker say next? One word of caution, however. Do not anticipate too much. This practice is called "jumping to conclusions" and can be deadly in terms of effective listening.

4. Have empathy. To be a good listener, a person must be sincerely interested in people. Empathetic listening involves trying to visualize matters from the other person's point of view.

It also means being sensitive to the feelings and attitudes of the person speaking. Some people have a difficult time expressing their true feelings about a matter, and their words do not convey the real meaning of what they wish to express. Assist people in conveying their feelings by techniques such as restating what they say.

5. Keep quiet. It is impossible to listen while you are talking.

6. Help the speaker by being attentive. Sitting in an attentive position, keeping your head forward and maintaining direct eye contact with the speaker puts the speaker at ease by helping him or her know that your are vitally interested in what is being said.

7. Ask questions. The right question at the right time not only encourages the speaker, but also proves that you were listening. Open questions are the best--those which ask who, what, where, when, why or how. Avoid interrupting to ask too many questions.

8. Exercise patience. Give other people a chance to speak. Schedule yourself so you have time to listen patiently in a relaxed manner. If the matter is important and you do not have time to listen attentively, try to reschedule the

conversation for a time when you can give it your full attention.

9. Avoid being critical. When one person is argumentative, the other person almost automatically becomes defensive. A person who is on the defensive is usually not in a mood to communicate freely and openly and may decide not to tell you what you need to hear.

10. Be aware of the physical setting. Try to keep distractions to a minimum. Phones ringing, machines working, and people coming and going can all distract from effective listening.

ASSIGNMENT SHEET

LISTENING SKILLS IMPROVEMENT PLAN

Directions: Complete the self-assessment by finishing each of the statements listed below.

1. Three listening strengths I have are:

a. I _____

For example (give a specific example of a time when you have used that skill) _____

_____.

b. I _____.

For example _____

_____

c. I _____.

For example _____

_____

2. Three bad listening habits I intend to improve are:

a. I _____.

b. I _____.

c. I _____.

3. I intend to implement the plan with the following three people (give the name and relationship to you):

a. _____

b. _____

c. _____

4. Cite three specific example of techniques you tried, what improvement what observed, and what outcomes resulted from your efforts.

a.

b.

c.

INFORMATION SHEET

COMMUNICATION OBSTACLES

People are not always successful in their interactions with others. Breakdowns in communication may occur for a variety of reasons:

1. Giving Poor Instructions

Sometimes we fail to do what another person asks of us because the instructions were vague or confusing. You may think that you are following your supervisor's instructions, but after the project has been completed, find out you have performed it incorrectly.

When giving instructions keep the following principles in mind:

- Check to see if the receivers know specialized terms for things, processes or personnel
- Use a step-by-step organization by breaking the ideas into easy stages
- Use eye contact, facial expression, and gestures to reinforce the verbal message
- Have patience with questions from the receivers and take time to answer them
- Identify from whose point of view the instructions are given when indicating "right" or "left"
- Provide visual explanations or demonstrations if possible
- Provide a favorable environment for listening by reducing noise and outside distractions
- Ask receivers to repeat instructions in order to check understanding

2. Not Following Instructions

Problems occur when people neglect to read or follow directions before proceeding. It has been repeatedly proven that workers would rather attempt a task by the hit-or-miss method than read instructions.

Why do people resist following specific directions when provided? We often assume we know how to do something so there is no need to read the instructions. Or the person's ego might be at stake.

In two special cases it is absolutely essential that employees understand instructions:

- When expensive materials and/or processes can be damaged if instructions are not followed.
- When a person can be injured if instructions are

not followed.

3. Assuming Too Much

The mistake of assuming too much is easy to make. For instance a foreman told one of his workers, "Take the battery out of the trunk of my car and put it in the pickup." The worker did as he was told. He took the battery from the car and put it in the bed of the pickup. Imagine the foreman's surprise when he jumped into the truck to run an errand and it would not start. He assumed the worker knew that he wanted the battery installed under the hood of the truck. He did not provide the worker with enough detailed information to do the job.

4. Bypassing

Bypassing occurs when two people

- Have different meanings for the same word
- Use two different words but actually mean the same thing

For example, your supervisor might tell you to finish up a project as soon as possible. For you "as soon as possible" might mean as soon as you finish the project your are working on now. For your supervisor, however, "as soon as possible" may mean drop everything and do this project now. Even though you are using the same words, communication breaks down because you have different meanings for those words.

5. Tunnel Vision

Tunnel vision assumes that there is only one way to do something--the way we have always done it! People with tunnel vision refuse to listen to new ideas or ways of doing things. They might say things like, "We've tried that before," "Management will never allow it," "We could never afford that."

6. Technical Words

We live in a very specialized, industrialized world. People who work in specialized jobs develop a specialized language called jargon. As long as they talk to each other there are few problems. However, when an apprentice tries to talk to an engineer each using their own jargon, communication can break down.

7. Communicating Information We Don't Have

Have you ever been asked a question you did not know the answer to and given an answer anyway? In this case, you probably tried to give facts and information you did not have, too embarrassed to admit your ignorance. It is human

nature to want others to think we have all the answers.

In today's rapidly changing, high-technology world, it is difficult to keep up with current facts and information. This difficulty can present a problem for supervisors and managers who have been away from actual plant operations too long. He or she may have had accurate, up-to-date technical knowledge but has either forgotten it or not kept current.

Problems occur when people are unwilling to admit their lack of knowledge. A supervisor, who in the past ran a manually-controlled milling machine, might find it difficult to provide sufficient technical information for a machinist operating a computer-controlled milling machine.

ASSIGNMENT SHEET

BARRIERS

Directions: Choose two of the communication barriers listed on the information sheet. Give an example of how these barriers have caused communication breakdowns either at school or where you work. Discuss with a peer how that type of breakdown could be avoided in the future. Be prepared to share your information with the class.

BARRIER	EXAMPLE	HOW IT COULD BE COULD BE AVOIDED
1.		
2.		

ASSIGNMENT SHEET

BARRIERS IN THE WORKPLACE

Directions: Divide into group of five or six. Read the following list of communication barriers aloud. Each person should check several problems that are familiar where they work. Select several problems for discussion. Describe a real situation in which a similar problem occurred. What created the barriers? Suggest specific behaviors that individuals could have used to solve the problem.

_____ 1. Lack of common vocabulary

_____ 2. Conflicting orders received

_____ 3. Message relayed through too many people

_____ 4. Lack of access to a person of higher rank

_____ 5. Lack of listening or hearing

_____ 6. Failure to pay attention to feedback

_____ 7. Personal bias or slanting the message

_____ 8. Jumping to conclusions before having all the facts

_____ 9. Not being informed or aware of particular job responsibilities

_____ 10. Making an assumption

482

COMMUNICATION SKILLS EVALUATION

This application is designed to give the apprentice and the supervisor a tool to discuss communication skills and areas of improvement.

1. Begin by having the supervisor complete the Communication Skills Checklist.
2. Next the supervisor and apprentice will discuss the checklist. The supervisor should explain why the apprentice was rated as he/she was. This is a good time for the apprentice to ask questions.
3. The apprentice and the supervisor should agree on three areas for improvement.
4. The apprentice completes the action plan in the Apprentice Guide.
5. Three months later, the apprentice and supervisor should discuss whether the apprentice has kept to the action plan.

COMMUNICATION SKILLS CHECKLIST

Apprentice's Name _____

Your Name _____

Date _____

Evaluate the apprentice's communication skills by completing the following checklist. Use the rating schedule listed below:

0 - BELOW EXPECTED: Performance is below minimum expectations. Need for improvement is evident.
1 - SATISFACTORY: Sometimes performance meets expectations, but not consistently.
2 - PROFESSIONAL: Performance consistently meets expectations.

1.	Apprentice shows the ability to work effectively with management.	0	1	2
2.	Apprentice follows instructions accurately.	0	1	2
3.	Apprentice gets along well with fellow workers.	0	1	2
4.	Apprentice listens to work direction carefully.	0	1	2
5.	Apprentice seeks out feedback to improve performance.	0	1	2
6.	Apprentice can accept criticism and change behavior accordingly.	0	1	2
7.	Apprentice communicates ideas, needs, directions or problems in a clearly understandable way.	0	1	2
8.	Apprentice can communicate effectively with customers.	0	1	2
9.	Apprentice accurately records job data.	0	1	2
10.	Apprentice remains aware of new developments in the trade.	0	1	2

COMMUNICATION STRENGTHS:

AREAS FOR IMPROVEMENT:

ACTION PLAN FOR IMPROVING COMMUNICATION SKILLS

What specific communication skills do you want to continue to improve?

1.

2.

3.

What actions will you take to improve them?

1.

2.

3.

What issues or questions do you want to discuss with your supervisor in order to improve those skills?

FEASIBILITY STUDY

FEASIBILITY STUDY

COMPETENCY:

Conduct a feasibilty study.

OBJECTIVES:

1. Summarize the steps for inspecting a work site.
2. Identify limitations of a work site.
3. Determine equipment availability.
4. Establish options.
5. Recommend preferred solutions.

LEARNING ACTIVITIES:

1. LISTEN to a class lecture presented by your instructor on feasibility study.

2. PARTICIPATE in class discussion on feasibility study.

3. COMPLETE the Feasibility Study assignment sheet.

APPLICATIONS:

1. Inspect the work site.
2. Identify limitations of the work site.
3. Establish project options.
4. Recommend best solution.

EVALUATION/CHECK OUT:

Orally present your findings from the Feasibility Study you completed to your classmates. Critique your classmates study as well.

ASSIGNMENT SHEET

FEASIBILITY STUDY

An important area of sheet metal work is developing the ability to properly conduct a feasibility study for a potential project. Your instructor will give you an example project. Your assignment is to complete the following feasibility study using your current work site to draw your information from. Be prepared to orally present your findings to your classmates.

1. Inspect the work site of desired project. List the obvious requirements to properly complete the project. Include factors such as location of project, size of project, area of work site, limitations of work site, safety precautions and limitations of working area.

   a. _____

   _____

   b. _____

   _____

   c. _____

   _____

   d. _____

   _____

   e. _____

   _____

   f. _____

   _____

   g. _____

   _____

   h. _____

   _____

   i. _____

   _____

2. List the possible options available.

a. _____

_____

b. _____

_____

3. For each option, complete the following chart to determine what materials are needed and the availability of the materials to complete the project.

OPTION A:

MATERIAL	MATERIAL AVAILABILITY

OPTION B:

MATERIAL	MATERIAL AVAILABILITY

4. For each option, complete the following chart to identify the processes required, machine used and machine availability needed to complete the project.

OPTION A:

PROCESS	MACHINE	MACHINE AVAILIBILITY

OPTION B:

PROCESS	MACHINE	MACHINE AVAILIBILITY

5. Comment on your personal recommendations.

a. _____

_____

b. _____

_____

PLANNING

PLANNING

COMPETENCY:

Effectively plan the project.

OBJECTIVES:

1. Prepare sketches and drawings of projected concept.
2. Demonstrate the ability to transform the concept to paper.
3. Calculate volumes and capacities.
4. Apply mathematical formulas properly.
5. Calculate sizes needed for a specific project.
6. Use a calculator to perform mathematical functions.
7. Explain situations when a computer would be implemented.
8. Develop an appropriate material list.
9. Organize a feasible work schedule.
10. Estimate cost requirements.
11. Analyze labor, material and overhead expenses.
12. Asses manpower requirements.
13. Estimate time required.
14. Identify tasks to be performed.

LEARNING ACTIVITIES:

1. READ and STUDY the Developing the Plan information sheet.

2. READ pages 383-400 in Practical Sheet Metal Layout, Specialty Items Used Today by Richard Budzik.

3. READ pages 366-382 in Practical Sheet Metal Layout, Specialty Items Used Today by Richard Budzik.

4. PARTICIPATE in a class lecture and discussion on Project Planning.

5. COMPLETE the Project Plan Form Sheet assignment sheet.

6. BRING TO CLASS samples of planning sheets currently being used in your place of employment.

7. OPTIONAL: VIEW the videotapes assigned by your instructor.

APPLICATIONS:

1. Sketch or draw the project concept.

2. Develop an appropriate material list.
3. Estimate cost requirements.
4. Estimate time requirements.
5. Schedule work.

EVALUATION/CHECK OUT:

1. Submit your assignment on completing a Project Plan Form Sheet.

INFORMATION SHEET

DEVELOPING THE PLAN

The experienced craftsperson plan their job carefully before starting to work. Sheet metal workers should plan their projects with the same concern. The planner uses their past experience and education when developing a plan. They call upon their knowledge of mathematics, machines, machine functions, tooling types, and materials. Their own knowledge must be supplemented with data from other sources. They must seek out information from textbooks, technical handbooks, and from the personal experiences of fellow workers. They must also consult technical sources for new methods when they provide greater benefits than the established ones.
All this is necessary in order to devise a sound and logical sequence when developing the plan.

A good plan includes the following information:

1. A feasible work schedule created to allow adequate time to complete the project.

2. A working drawing of the project; this could be a carefully sketched freehand or a pictorial drawing.

3. A bill of materials.

4. A list of the sequential steps for making each component within the project.

5. A cost estimation required to complete the project.

6. A time estimation needed to finish the project.

PROJECT SCHEDULE:

Any project, no matter what size, needs a written set of schedules. The process of scheduling forces determination, first, of the order in which events must occur, and second, of the time it will take to do them all. Schedules coming out of the planning process should be in a form suitable for immediate use.

Following are major steps in project scheduling:

1. Define the project objectives.
2. Divide the project into manageable parts.
3. Decide, in detail, what has to be done and in what sequence.
4. Estimate the duration of each separate activity.
5. Use the activity duration estimates to calculate the

estimated project duration, and the relative significance of each activity to timescale objectives.

6. Reconcile the planned project with the resources that can be mustered.
7. Assign tasks to individuals, by name.

SKETCHING AND DRAWING:

If plans are not available for the project you want to make, your first task will be to prepare working drawings. The drawings may be sketched or made with drafting instruments. One of the most important functions of the sketcher's job is thinking; visualizing what it is they want to create and then producing their drawings or sketches so that they express their thoughts and decisions. Their ability to visualize is a critical asset when they draws or designs. A sketcher also needs to keep their drawing simple, yet inclusive. Read pages 383-400 in Practical Sheet Metal Layout, Specialty Items Used Today by Richard Budzik for more information on sketching and drawing.

BILL OF MATERIALS:

You must have the correct metal before you can make a metal project therefore, it is necessary to know how to specify and order metals. The working drawing gives all of the information needed to make a bill of materials.

A bill of materials should show:

1. The parts of the project, identified by numbers or letters.
2. The number of pieces needed for each part.
3. The size of the material.
4. The shape and kind of material.
5. The standard parts used in the project.
6. The unit cost of the material; the cost per pound, per foot, per square foot, etc.
7. The total cost of the materials.

A standard part is a part that is made by several companies and is the same no matter who makes it. Hardware such as bolts, nuts, rivets, screws and washers, that are made to standard sizes and shapes, are standard parts. Use catalogs to get information about standard parts and materials.

Standard stock is the material that is used in the manufacture of finished projects. Steel as it comes from the steel mill is standard stock. Standard stock is purchased from metal wholesalers who stock each shape in many sizes. The size given on the bill of materials is the size of the

standard stock that you will order. The size given on the working drawing is the finished size. The size of any part, as given on the working drawing, must have added to it the extra metal which is needed for finishing the project to size.

Standard stock is specified or described as follows:

Flat sheet or Strip
Thickness x width x length, as follows:
1/8" x 1 3/4 " x 4 1/4"

Square Bar
Thickness x width x length, as follows:
1" x 1" x 4 1/4"

Round Bar
Diameter x length, for example:
2" Dia. x 4 1/4"

Hexagonal and Octagonal Bar
Distance across flat sides x length, for example:
1 1/4 " x 4 1/4"

Tubing
Outside dimensions x wall thickness x length, as:
7/8" Dia. x .049 wall x 12: and
1" x 1" x .062 wall x 18 "

Structural Shapes
Overall cross-sectional dimensions x shape x wall thickness x length, for example:
1 1/2 " x 1 1/2 " angle x 3/16" wall x 36"

Metal wholesalers normally sell all metals by weight. Prices are quoted as cost per hundred pounds.

STEPS OF PROCEDURE FOR COMPLETING EACH PROJECT COMPONENT:

A plan of procedure is a list of operations, in their sequential order, one proposes to follow in the construction of each component in their project. Throughout this procedure, the planner may question each sequence of work being analyzed. The questioning can be based upon key words such as: why, what, where, when, who and how. The many possibilities should be carefully examined and evaluated. This requires clear thinking and a great deal of imagination. The application of a checklist to guide the questioning is invaluable. The following checklist may be useful:

Basic Principles:
- Arrange steps in best order
- Reduce number of steps

- Make steps as economical as possible
- Combine steps if economical
- Shorten moves

1. Can any step be eliminated?
   a. as unnecessary
   b. by using new equipment
   c. by changing the sequence of operations
   d. by changing the project design

2. Can any operation be combined with another? Are there possible changes to make this feasible in:
   a. running two or more parts at a time
   b. equipment
   c. tooling
   d. project design

3. Can any operation be made easier or shorter?

4. Can a computer be helpful in any operation?

5. Can any operation be adapted to numerical control machining?

Diligence, work experience, interest in learning, and positive work attitudes are among the many virtues that create skill in determining the sequence of operations. Following simple, sound approaches to problems will result in satisfactory solutions. Utilization of past work experience gained through observation and personal contact will result in improved planning.

COST ESTIMATION:

Apprentices are not often given the responsibility of estimating the total cost of a given job, however, it is a fact that the most qualified estimators have trade experience. Estimating basically consists of accumulating details, or the process of calculating all the costs which will enter into the particular job in order to arrive at a total. Since the estimate is naturally made before doing the job, it can only be an "educated guess." Read pages 366-382 in Practical Sheet Metal Layout, Specialty Items Used Today by Richard Budzik for more information on cost estimating.

CALCULATION OF TIME:

The planner must rely on their work experience and personal observations to forecast operational time. The time needed for unknown operations can be estimated from the planner's ideas on the application and from formulas available from numerous industry sources. The following elements must be

considered in the calculation of time required to perform an operation.

1. Setup time: This time includes all the time necessary to prepare the machine for the production of the part. This time includes:
   a. Teardown of previous setup and cleaning of machines.
   b. Time to study blueprint, process sheet, etc.
   c. Time to obtain tools.
   d. Time to install tools.
   e. Time to adjust machine and cutters.
   f. Machining the initial part.
   g. Gauging the initial part.

   The setup time should be the same every time it reappears in the shop. An initial good setup eliminates the need for readjustment later.

2. Run time: The run time includes all the time required to perform all the handling elements plus machining elements. The run time is frequently called "floor-to-floor time."

   The handling element is comprised of all the necessary physical moves made by the operator in preparing and disposing of the part. They include picking up the part, placing it in the fixture, clamping the part, positioning the tool for cutting, clearing the tool after cutting, releasing the part form the fixture, and returning the part to the original container.

   The machining element can be readily obtained through data or by calculation. Before estimating the cutting time, the following questions must be asked:
   a. What cutting speed should be used?
   b. What feed should be used?
   c. What spindle speed or rpm?
   d. How many cuts required?

   Run time is calculated per cutting time in minutes. Minutes are converted to decimal standard hours.

3. Allowances include:

   a. Fatigue: Excessive use of mind or muscles produces a feeling of tiredness, decreasing the capacity to do work.
   b. Cutter change allowance: The time needed to replace a tool varies with the type of tool, tolerances to be held, and the life of the tool. The time needed to change a tool is relatively short compared with the time needed to resharpen it.

c. Inspection: Any appreciable wear on the cutting tool, tool holder, locating device, or machine affects size. It is, therefore, necessary to inspect parts occasionally and readjust the tool to compensate for the wear.

ASSIGNMENT SHEET

COMPLETED PROJECT PLAN FORM SHEET

You recently completed a feasibility study for an assigned project. Now, using your results and the best option you have chosen, complete a project plan for that assigned project. Fill in the following form sheet with the appropriate information.

PROJECT PLAN SHEET

Name _____

Name of Project _____

Estimated Time _____ Actual Time _____

BILL OF MATERIALS

Part Name	No. of Pieces	Material	Size T W L	Unit Cost	Total Cost

Total Cost _____

PLAN OF PROCEDURE

List the operations to be performed in their sequential order. Indicate the tools and equipment needed to accomplish the job.

No.	Operations	Tools and Equipment

MATERIAL LIST

MATERIAL LIST

COMPETENCIES:

1. Use different types of metals.
2. Choose materials for a specific job.

OBJECTIVES:

1. List the common properties of metals.
2. Recognize, by sight and feel, different types of metals.
3. Differentiate among metals alloys.
4. Use numbering systems and color codes to identify metals, classify carbon steels, and identify standard metal shapes.
5. Define terms related to basic metals and metallurgy.
6. Match metal abbreviations with their meanings.
7. Classify metals according to their characteristics and uses.
8. Identify metals by appearance, color and corrosion resistance.
9. List common coated metals and the coating of each.
10. Identify and use the proper gauge to determine metal thickness and weight.
11. Match properties of metals with their application.
12. Identify the mechanical strengths of various metals.

LEARNING ACTIVITIES:

1. READ the "Introduction to Metals" and "Measuring Sheet Metal" information sheet

2. EXAMINE metal samples.

3. WATCH your instructor demonstrate the use of the U.S. Standard and wire guage for measuring different types of metals.

4. USE a U.S. Standard and wire guage to determine the thickness of metals.

5. PARTICIPATE in a class discussion about uses and properties of metals.

6. COMPLETE the Thickness and Weight assignment sheet.

7. VIEW the Materials Testing videotape.

EVALUATION/CHECK OUT:

1. IDENTIFY various metals and their characteristics.
2. DEMONSTRATE your knowledge of the objectives in a test situation.

INFORMATION SHEET

INTRODUCTION TO METALS

Choosing the proper metal for a project is very important. A finished job may be a masterpiece, but it would be virtually useless if the wrong materials were used.

The metals used in fabrication can be placed into two groups: ferrous metals (the irons) and Non-ferrous metals (no iron present). Each group inlcudes several types of metal for different uses.

FERROUS METALS

When selecting a ferrous metal for fabrication, consider the following:

- What will the finished product be used for?
- How does the metal react to heat and vibrations?
- Does the finished product require weldments?
- How will the metal machine?
- How will the metal react to various welding procedures?

Common ferrous metals include:

- Low carbon steels
- Low alloy steels
- Steel castings
- Cast iron (ductile, gray, malleable)

Low alloy steels are used most often for fabrication.

NONFERROUS METALS

Nonferrous metals are more expensive than ferrous metals, but they withstand exposure to outside elements more readily. Nonferrous metals also require different fabrication techniques.

Common nonferrous metals include:

- Aluminum
- Brass
- Copper
- Lead
- Magnesium
- Nickel
- Monel

PROPERTIES OF METAL

When choosing material for a specific job, it is important to consider the properties of various metals.

STRENGTH
Strength is a general term referring to the ability of metal to hold loads without breaking. For example, steel is strong, but lead is weak.

DUCTILITY
Ductility refers to the ability of the metal to be stretched without breaking. Soft iron, soft steel and copper are ductile metals. Ductility is an important factor when bending metals.

MALLEABILITY
Malleable metal can be rolled forged or hammered without cracking or breaking. Copper is a malleable metal.

HARDNESS
Hard metal resists penetration, wear or cutting action.

TOUGHNESS
Metal that is tough will not tear or shear easily and will stretch without breaking. Rolled sheet steel is tough.

BRITTLENESS
Brittle metal shatters easily. Such materials as cast iron, glass and very hard steel (files) are brittle.

COLD-WORK
If a peice of metal is formed while cold, the metal is said to be cold-worked. Practicially all the work a sheet metal worker does on metal is cold-work. Cold-working causes the metal to become hardened and brittle. If the metal is cold-worked too much--that is, if it is bent too sharply, hammered too much, or bend back and forth at the same place too often--it will crack or break. Usually the more malleable and ductile a metal is, the more cold-working it can stand before cracking or breaking. For this reason, some heavier metals should have a radius when forming them in the brake.

ALLOY
A mixture or compound formed by melting one or more metals together with another metal.

ANNEALING
A process by which a metal or metals my be softened by heating and either slow cooling or quenching.

INFORMATION SHEET

CHARACTERISTICS OF STAINLESS STEEL

DURABILITY	Permanent Painting or protective coating not necessary Not ordinarily affected by mortar or concrete Compatible with other building materials
WEATHERABILITY	Will not deface, tarnish, or fade in most atmospheres
APPEARANCE	Will not stain or discolor adjacent surfaces Blends with other materials May be painted if desired
STRENGTH	Resists wind damage, denting and abuse Protects against fire by maintaining strength at elevated temperatures Good resistance to metal fatigue
EXPANSION	Thermal expansion of chromium-nickel stainless steel falls near the middle of the range of common roofing and flashing metals
WORKABILITY	Can be readily formed, joined, and installed using gages suggested Joints are easily soldered and reliably watertight
MAINTENANCE	Requires little or no maintenance Normal rainfall will usually keep surface clean
AVAILABLITY	Readily available locally

INFORMATION SHEET

MEASURING SHEET METAL

Metal sheets, wire, band ron, and angle iron are the most widely used materials in the sheet metal trade. The sheets may be plain, ribbed or corrugated and made of such metals as black iron, tin plate, copper, aluminum, stainless steel, monel etc.

Sheet thickness are designated by a series of numbers called gages. Several systems are in use at the present time for different kinds of metals, but iron and steel sheets should be designated by the U.S. Standard Gage. The U.S. Standard Gage was adopted by congress on March 3, 1893. The numbers vary from 0 to 36 gage. A 0 gage thickness is .3125' thick and 36 gage is .007" thick. In other words, the higher the number, the lighter the metal.

Note that in the sheet metal trade, the word "gage" also refers to a device for measuring the thickness (or gage) of sheets or devices which act as stops when marking, cutting, or forming metal.

Below is a drawing of a gage used to measure the thickness of metal sheets. It is a disc-shaped piece of metal having slots of a width to correspond to the U.S. gage numbers. The numbers from 0 to 36 are marked on the back.

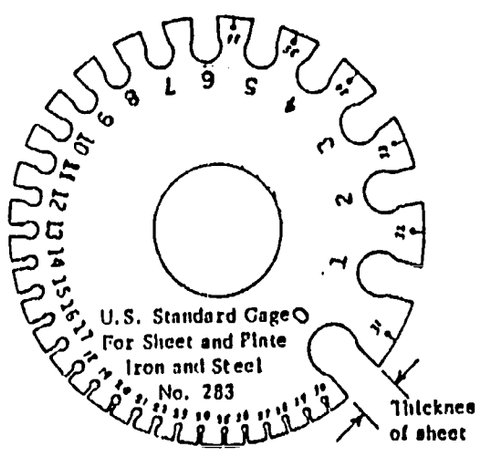

U.S. STANDARD GAGE

The thickness of sheets can also be measured with a micrometer and this measurement compared with the table of gages to select the correct gage number of the sheet.

A metal with a gage reading of 8 to 38 gage is called sheet stock. A gage reading of 8 through the 0's is known as plate stock. Then the gage can be omitted and termed as: 1/4 inch plate, 3/8 inch page, 1/2 inch plate, etc.

OTHER GAGES

The American Steel and Wire Gage is used for measuring the thickness of sheets and wire made of nonferrous metals such as copper, brass, and aluminum (sometimes referred to as the Brown and Sharpe gage.)

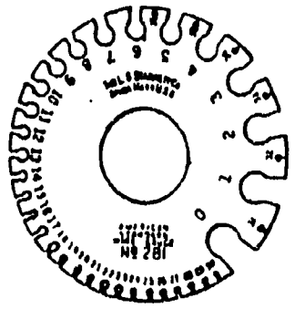

There are other specialty gages such as the English standard Wire gage and the American Screw Company gage, but the American and U.S. Standard are the most frequently used in sheet metal work.

INFORMATION SHEET

GALVANIZED CARBON STEEL SHEETS

Gauge #	Lbs Per Sq Ft (Approximate)	Thickness Equivalent	Thickness Range in Inches
8	7.03125	0.1681	.1756-.1607
9	6.40625	0.1532	.1606-.1458
10	5.78125	0.1832	.1457-.1308
11	5.15625	0.1233	.1307-.1159
12	4.53125	0.1084	.1158-.1009
13	3.90625	0.0934	.1008-.0860
14	3.28125	0.0785	.0859-.0748
15	2.95875	0.0710	.0747-.0673
16	2.65625	0.0635	.0672-.0606
17	2.40625	0.0575	.0605-.0546
18	2.15625	0.0516	.0545-.0486
19	1.90525	0.0456	.0485-.0426
20	1.65625	0.0396	.0425-.0382
21	1.53125	0.0366	.0381-.0352
22	1.40625	0.0336	.0351-.0322
23	1.28125	0.0306	.0321-.0292
24	1.15625	0.0276	.0291-.0262
25	1.03125	0.0247	.0261-.0232
26	0.90625	0.0217	.0231-.0210
27	0.84375	0.0202	.0209-.0195
28	0.78125	0.0187	.0194-.0180
29	0.71875	0.0172	.0179-.0165
30	0.65625	0.0157	.0164-.0150
31	0.59375	0.0142	.0149-.0138
32	0.56250	0.0134	.0137-.0131

INFORMATION SHEET

CARBON STEEL AND BRASS SHEETS

Carbon Steel		
USS Gauge #	Thickness Equivalent	Lbs Per Sq Ft (Approximate)
1	.28125	11.250
2	.26562	10.620
3	.2391	10.000
4	.2242	9.375
5	.2092	8.750
6	.1943	8.125
7	.1793	7.500
8	.1644	6.875
9	.1494	6.250
10	.1345	5.625
11	.1196	5.000
12	.1046	4.375
13	.0897	3.750
14	.0747	3.125
15	.0673	2.812
16	.0598	2.500
17	.0538	2.250
18	.0478	2.000
19	.0418	1.750
20	.0359	1.500
21	.0329	1.375
22	.0299	1.250
23	.0269	1.125
24	.0239	1.000
25	.0209	.875
26	.0179	.750
27	.0164	.687
28	.0149	.625
29	.0135	.526
30	.0120	.500

Brass		
American Gauge #	Thickness Equivalent	Lbs Per Sq Ft (Approximate)
1	.2893	12.75
2	.2576	11.35
3	.2294	10.11
4	.2043	9.002
5	.1819	8.015
6	.1620	7.138
7	.1443	6.358
8	.1285	5.662
9	.1144	5.041
10	.1019	4.490
11	.1907	3.997
12	.0808	3.560
13	.0720	3.173
14	.0641	2.825
15	.0571	2.516
16	.0508	2.238
17	.0453	1.996
18	.0403	1.776
19	.0359	1.582
20	.0320	1.410
21	.0285	1.256
22	.0254	1.119
23	.0226	.9958
24	.0201	.8857
25	.0179	.7887
26	.0159	.7006
27	.0142	.6257
28	.0126	.5552
29	.0113	.4979
30	.0100	.4406

INFORMATION SHEET

COPPER AND ZINC SHEETS

Copper		
Gauge #	Thickness Equivalent	Lbs Per Sq Ft (Approximate)
1	.300	13.94
2	.284	13.20
3	.259	12.04
4	.238	11.07
5	.220	10.22
6	.203	9.420
7	.180	8.360
8	.165	7.660
9	.148	6.875
10	.134	6.225
11	.120	5.575
12	.109	5.065
13	.095	4.410
14	.083	3.860
15	.072	3.338
16	.065	3.020
17	.058	2.695
18	.049	2.280
19	.042	1.952
20	.035	1.627
21	.032	1.484
22	.028	1.302
23	.025	1.162
24	.022	1.022
25	.020	.928

Zinc		
Gauge #	Thickness Equivalent	Lbs Per Sq Ft (Approximate)
24	.125	4.70
23	.100	3.75
22	.090	3.37
21	.080	3.00
20	.070	2.62
19	.060	2.25
18	.055	2.06
17	.050	1.87
16	.045	1.68
15	.040	1.50
14	.036	1.35
13	.032	1.20
12	.028	1.05
11	.024	.90
10	.020	.75
9	.018	.67
8	.016	.60
7	.014	.52
6	.012	.45
5	.010	.37
4	.008	.30
3	.006	.22
-	—	—
-	—	—
-	—	—

INFORMATION SHEET

STAINLESS STEEL SHEETS

Thickness Ordering Range in Inches	Gauge #	Thickness Equivalent	Lbs Per Sq Ft (Approximate) Cold Rolled
.161 to .176	8	.17187	7.2187
.146 to .160	9	.15625	6.5625
.131 to .145	10	.140625	5.9062
.115 to .130	11	.125	5.5200
.009 to .114	12	.109375	4.5937
.084 to .098	13	.09375	3.9374
.073 to .083	14	.078125	3.2812
.066 to .072	15	.0713125	2.9521
.059 to .065	16	.0625	2.6250
.053 to .058	17	.05625	2.3625
.047 to .052	18	.050	2.1000
.041 to .046	19	.04375	1.8375
.036 to .040	20	.0375	1.5750
.033 to .035	21	.034375	1.4437
.030 to .032	22	.03125	1.3125
.027 to .029	23	.028125	1.1813
.024 to .026	24	.025	1.0500
.0199 to .023	25	.021875	0.9187
.0178 to .0198	26	.01875	0.7875
.0161 to .0177	27	.0171875	0.7218
.0146 to .0160	28	.015625	0.6562
.0131 to .0145	29	.0140625	0.5906
.0115 to .0130	30	.0125	0.5250
.0105 to .0114	31	.0109375	0.4594
.0095 to .0104	32	.01015625	0.4265

INFORMATION SHEET

GALVANIZED AND BLACK IRON

GALVANIZED AND BLACK IRON			
GAGE (U. S. STANDARD)	APPROXIMATE THICKNESS (INCHES)	LBS/SQ FT GALVANIZED	LBS/SQ FT BLACK IRON
7	0.1793	—	7.500
8	0.1644	—	6.875
9	0.1494	—	6.250
10	0.1345	5.7812	5.625
11	0.1196 1/8"	5.1562	5.000
12	0.1046	4.5312	4.375
13	0.0897	3.9062	3.750
14	0.0747	3.2812	3.125
15	0.0673	2.9687	2.812
16	0.0598 1/16"	2.6562	2.500
17	0.0538	2.4062	2.250
18	0.0478	2.1562	2.000
19	0.0418	1.9062	1.750
20	0.0359	1.6562	1.500
21	0.0329 1/32"	1.5312	1.375
22	0.0299	1.4062	1.250
23	0.0269	1.2812	1.125
24	0.0239	1.1562	1.000
25	0.0209	1.0312	0.875
26	0.0179	0.9062	0.750
27	0.0164	0.8437	0.688
28	0.0149 1/64"	0.7812	0.625
29	0.0135	0.7187	0.563
30	0.0120	0.6562	0.500

514

INFORMATION SHEET

ALUMINUM

Thickness and Size, Inches	Mill Finish							
	1100		3003		5052			5086
	-0	-H14	-0	-H14	-0	-H32	-H34	-H32
.190 × 36 × 96				X*		X		
48 × 120				X*				
48 × 144		X		X*	X	X*		
60 × 144				X*				
.160 × 48 × 144						X		
.125 × 36 × 96	X			X		X*		
48 × 96				X*		X*		
48 × 120				X*				
48 × 144		X	X	X*	X	X*	X*	X
60 × 144				X*		X*		
.100 × 48 × 144						X*		
.090 × 36 × 96						X*		
48 × 96						X		
48 × 144					X	X*	X*	
.080 × 48 × 96						X		
48 × 144						X*	X	
.063 × 36 × 96		X						
48 × 96						X*		
48 × 144					X	X*	X	
60 × 144				X				
.050 × 48 × 144						X*		
.040 × 48 × 144						X		
.032 × 48 × 144						X		

X — Standard Items

X* — Plant stocks available

O — Indicates sheet has been annealed

H — Indicates sheet has been strain-hardened

(NOTE: The digit 1 following the letter H means sheet has been strain-hardened only, or subjected to stress to improve strength and hardness. Second digit indicates hardness on a scale of 0 to 7, so a 3003-H14 indicates the sheet has been strain-hardened only and is medium hard. The 3003-H14 aluminum sheet is the most commonly used sheet in the industry.)

ASSIGNMENT SHEET

MEASURING SHEET METAL

DIRECTIONS: Your instructor will have selected pieces of metal and arranged them on a table. Each piece of metal will be tagged with a number. Measure the thickness of the metal and record your answer.

1. _____

2. _____

3. _____

4. _____

5. _____

6. _____

7. _____

8. _____

9. _____

10. _____

516

ASSIGNMENT SHEET

THICKNESS AND WEIGHT

DIRECTIONS: Use the trade tables to answer the following questions.

1. A sheet of galvanized iron checks out to be 18 gauge. What is its thickness rage in inches?

2. A sheet of galvanized iron has a thickness range of .0380 inches. What is the gauge number?

3. A sheet of carbon steel check out to be 10 gauge. What is its approximate thickness in inches?

4. Which would weigh the most, a square foot of 10 gauge sheet metal or a square foot of 20 gauge sheet metal?

5. What would be the gauge number of a sheet of zinc that had an approximate thickness of .040 inches?

6. A job calls for stainless steel sheet no thinner than .036 inches and not thicker than .040 inches. What gauge number of stainless steel should be ordered?

7. What would weigh the most, a square foot of 10-gauge stainless steel or a square foot of 20-gauge stainless steel?

8. Job specifications call for aluminum sheet #3003 with a thickness of .125 inches. What is the minimum size sheet that should be ordered to cover a frame that is 42" x 86"?

INFORMATION SHEET

SAE - AISI STEEL CLASSIFICATION SYSTEM

Type of steel (alloying elements)	*Number designation*
Carbon steels	1xxx
Plain carbon	10xx
Free cutting (screw stock)	11xx
Free cutting, manganese	X13xx
High-manganese steels	T13xx
Nickel steels	2xxx
0.50% nickel	20xx
1.50% nickel	21xx
3.50% nickel	23xx
5.00% nickel	25xx
Nickel-chromium steels	3xxx
1.25% nickel, 0.60% chromium	31xx
1.75% nickel, 1.00% chromium	32xx
3.50% nickel, 1.50% chromium	33xx
3.00% nickel, 0.80% chromium	34xx
Corrosion- and heat-resisting steels	30xxx
Molybdenum steels	4xxx
Chromium	41xx
Chromium-nickel	43xx
Nickel	46xx and 48 xx
Chromium steels	5xxx
Low-chromium	51xx
Medium-chromium	52xxx
Corrosion- and heat-resisting	51xxx
Chromium-vanadium steels	6xxx
Tungsten steels	7xxx and 7xxxx
Silicon-manganese steels	9xxx

INFORMATION SHEET

METALS MOST COMMONLY USED IN SHEET METAL WORK

Metal	Characteristics	Rust Resistance	Typical Uses
Galvanized Iron	Iron or steel sheets coated with molten zinc; bright spangled appearance when new	Excellent	Gutter and cornice work furnace and air conditioning work, duct work, guards and blow pipe work
Black Iron	Uncoated sheets rolled from iron or a soft steel of low carbon content; looks bluish near the sides of the sheet and have a silvery appearance near the center	None; must be painted when job is finished	Pans, stove pipes, hoods safety gaurds, tanks, heat exchangers
Aluminum	Has a protective coating of oxide film; smooth or decorative finishes or a highly polished anodized finish; usually light and easy to handle	Excellent	Gravel guard, finish siding for campers and mobile homes
Stainless Steel	A steel alloyed with nickel and chromium; its beauty and corrosion resistance, is its great advantage	The best of all metals	Labs, hospitals, meat packing plants, restaurants, and applications where cleanliness and attractiveness are required
Paint Grip Iron	A cold rolled iron electroplated with a zinc process and ready to paint	Fair for a time, but still requires paint	Sign work, roof metals and general commercial constuction
Brass	Made by melting copper and zinc together; comes in a thin sheet called shim stock	Excellent	Automotive shops, trophies, brass rods for brazing and decorative applications
Copper	Attractive, reddish colored metal; has high resistance to corrosion but very expensive; comes in wire tube, and sheet; soft and easy to work with	Excellent	Roofing flashings, ornamental roofs, gutters. downspouts, hoods

Zinc	Usually used as an alloy or a coating for other metals	Excellent, but will tarnish	Additives to cut acids and as coatings for other metals
Expanded Metal	Made from flat steel sheet run through a stamping machine, then stretched to leave it full of diamond-shaped holes	None; must be painted when job is finished	Belt gaurds, protective guards for the back windows of trucks
Decorative Metal	Stamped with various punch patterns to create attractive designs; usually made from aluminum plate and available in many lively colors	Excellent	Ornamental and decorative applications
Tin Plate	Pure tin coated iron or steel sheets; coke, charcoal and dairy tin plates have a bright, silvery, mirror-like appearance.	Good	Food equipment where appearance and resistance to corrosion are essential.
Terne Plate	Copper-bearing steel strip, hot dip-coated with an alloy of lead and tin	Good	Metal roofing and weathersealing applications, such as valleys, copings, flashings and leader heads

LAYOUT

- BLUEPRINT READING
- MATHEMATICS
- LAYOUT AND MEASURING TOOLS
- PATTERN DEVELOPMENT

BLUEPRINT READING

COMPETENCY:

Interpret blueprint specifications.

OBJECTIVES:

1. Differentiate among types of dimensions.
2. Interpret exploded views and describe their uses.
3. Use an architectural scale to produce a drawing.
4. Use various scales in making and reading drawings.
5. Develop two and three view drawings.
6. Visualize one or more views from a given view.
7. Develop necessary views by means of projection.
8. Draw plan and elevation views.
9. Read an architectural drawing.
10. Identify layout allowances needed in seaming and joining ductwork.
11. Interpret commonly used trade symbols.
12. Interpret commonly used plumbing, electrical and welding symbols.
13. Interpret ductwork notations.

LEARNING ACTIVITIES:

1. COMPLETE the Sheet Metal Blueprint Reading for the Building Trades book by Claude J. Zinngrabe. Use the Blueprint Reading assignment sheet to keep track of your progress.

2. REVIEW your answers with the instructor or another student.

EVALUATION/CHECK OUT:

Submit your Blueprint Reading book to your instructor for grading after each section.

ASSIGNMENT SHEET

BLUEPRINT READING

DIRECTIONS: Complete all of the following assignments unless your instructor suggests otherwise. Review the answers for each section with your instructor. Redo any units where you did not receive at least 90% accuracy. Ask your instructor to initial your successful completion of each unit in the section.

Instructor's Initials

SECTION I: IDENTIFICATION

_____ 1. COMPLETE the Pretest and Review on page 1.

SECTION II: MEASUREMENT REVIEW

_____ 2. READ Inch Rules and Fractional Divisions on page 5. COMPLETE assignment unit 2 on page 8.

_____ 3. READ Inch Rule and Decimal Divisions on page 10. COMPLETE assignment unit 3 on page 11.

_____ 4. READ Architectural Scale on pages 13 - 14. COMPLETE assignment unit 4 on pages 15 - 16.

SECTION III: ANGULAR MEASUREMENT REVIEW

_____ 5. READ Unit 5: The Protractor on page 17. COMPLETE assignment unit 5 on page 18.

_____ 6. READ Unit 6: The Dividers on page 19. COMPLETE assignment unit 6 on page 20.

_____ 7. COMPLETE the Unit 7 Competency Test on pages 21 - 22.

SECTION IV: DRAWING REVIEW

_____ 8. READ Unit 8: Drawing Review on pages 23 and 24. COMPLETE assignment unit 8 on pages 25 and 26.

_____ 9. READ Unit 9: Architectural Drawing on page 27. COMPLETE assignment unit 9 on pages 28 and 29.

_____ 10. READ Unit 10: Sheet Metal Drawing on pages 30 and 31. COMPLETE assignment unit 10 on pages 32 - 34.

SECTION V: SYMBOLS

_____ 11. READ Unit 11: Architectural Drafting Symbols on pages 35 - 37. COMPLETE assignment unit 11 on pages 38 - 39.

_____ 12. READ Unit 12: Plumbing Symbols on pages 40-42. COMPLETE assignment unit 12 on page 43.

_____ 13. READ Unit 13: Electrical Symbols on pages 44 - 46. COMPLETE assignment unit 13 on page 47.

_____ 14. READ Unit 14: Welding Symbols on page 47. COMPLETE assignment unit 14 on page 49.

_____ 15. READ Unit 15: Sheet Metal Symbols on pages 50 - 51. COMPLETE assignment unit 15 on page 52.

SECTION VI: SHEET METAL SHOP PROCEDURES

_____ 16. READ Unit 16: Shop Methods on pages 53 - 55. COMPLETE assignment unit 16 on page 56.

_____ 17. READ Unit 17: Material on pages 57 - 59. COMPLETE assignment unit 17 on page 60.

_____ 18. READ Unit 18: Estimating Methods on pages 61 - 63. COMPLETE assignment unit 18 on pages 64 and 65.

SECTION VII: GENERAL SHEET METAL WORK

_____ 19. READ Unit 19: Sheet Metal Fittings on pages 66 - 68. COMPLETE assignment unit 19 on page 69.

_____ 20. READ Unit 20: Roofing and Flashing on pages 70 - 75. COMPLETE assignment unit 20 on page 76.

_____ 21. READ Unit 21: Gutters, Downspouts and Ventilators on pages 77 - 79. COMPLETE assignment unit 21 on page 80.

_____ 22. READ Unit 22: Metal Decking on pages 81 - 83. COMPLETE assignment unit 22 on page 84.

_____ 23. READ Unit 23: Vee Belt Guard - Removable Cover - Junction Box pages 85 - 86. COMPLETE assignment unit 23 on pages 87 and 90.

SECTION VII: WARM-AIR HEATING PLANS

_____ 24. READ Unit 24: Warm-Air Heating Plans on pages 91 - 94. COMPLETE assignment unit 24 on page 95.

_____ 25. READ Unit 25: Heating Plans on pages 96 and

97. COMPLETE assignment unit 25 on page 98.

_____ 26. READ Unit 26: Project Home - Residential Home on page 99. COMPLETE assignment unit 26 on pages 100 - 102.

SECTION IX: VENTILATION PLANS

_____ 27. READ Unit 27: Ventilation Systems on pages 103 - 104. COMPLETE assignment unit 27 on pages 104 - 105.

_____ 28. READ Unit 28: Industrial Ventilation System on page 106. COMPLETE assignment unit 28 on pages 107 - 109.

_____ 29. READ Unit 29: Multizone Ventilation Systems on page 110. COMPLETE assignment unit 29 on pages 11 - 113.

SECTION X: AIR-CONDITIONING PLANS

_____ 30. READ Unit 30: Air-conditioning Systems on page 114. COMPLETE assignment unit 30 on page 115.

_____ 31. READ Unit 31: A Multiduct Air-Conditioning System on page 116. COMPLETE assignment unit 31 on page 117-119.

_____ 32. READ Unit 32: A Motel Air-Conditioning System on page 120. COMPLETE assignment unit 32 on pages 120 -122.

SECTION XI: BLOWPIPE PLANS

_____ 33. READ Unit 33: Exhaust Systems on pages 123 - 124. COMPLETE assignment unit 33 on pages 124 - 125.

_____ 34. READ Unit 34: Grinding Exhaust - Sash and Door G on page 126. COMPLETE assignment unit 34 on pages 127 - 130.

SECTION XII: SHEET METAL DRAFTING

_____ 35. READ Unit 35: Ductwcrk Layout on pages 131 - 132. COMPLETE assignment unit 36 on pages 133 - 138.

MATHEMATICS

COMPETENCY:

Use mathematics to perform sheet metal operations.

OBJECTIVES:

1. Add, subtract, multiply and divide common fractions.
2. Add, subtract, multiply and divide decimal fractions.
3. Use tables of trade data.
4. Demonstrate the proper use of the micrometer, steel rule, and protractor.
5. Use averages and percentages.
6. Summarize methods used to calculate wages, and weights and costs.
7. Use intersecting lines and parallel lines.
8. Solve equations by division, multiplication, subtraction and addition.
9. Solve equations by square root.
10. Recognize the area of a square, rectangle, triangle, trapezoid and circle.
11. Describe parallel sided solids.
12. Recognize the volumes of cylindrical, semi-circular sided and spherical ended solids
13. Recognize the volumes of cones and pyramids.
14. Use allowances for edges and seams.
15. Discuss the use of stretchouts of rectangular pipes, circular jobs, semi-circular jobs and boxes.
16. Use bar graphs, circle graphs and line graphs.

LEARNING ACTIVITIES:

COMPLETE the Mathematic Progress Contract according to your instructor's directions.

EVALUATION/CHECK OUT:

Submit your Mathematics Progress Contract.

ASSIGNMENT SHEET

MATHEMATIC PROGRESS CONTRACT

Apprentice Name _____

Instructor Name _____

School _____

Employer _____

Based on Mathematics for Sheet Metal Fabrication, A New York State Vocational and Practical Arts Association Publications, published by Delmar Publishers, Inc.

NOTE: READ Pages 253 through 271

BASIC PRINCIPLE SERIES			ASSIGNMENT SERIES			
Unit	Page		Unit	Page	Problems to be completed	Grade
#1	1-2	Introduction to Common Fractions	#1	3	Problems B and only 50% of each number in C	_____
#2	4-5	Fractional Divisions of Steel Rule	#2	6	Problems A: 1-3	_____
#3	7	Addition of Common Fractions	#3	7-8	Problems 1,3,5,etc.	_____
#4	9	Subtraction of Common Fractions	#4	9-11	Problems A: 1,4,7,10, 13,16,19,22, 25,26,27 B: 1,3,5,7, 9,11	_____
#5	12	Multiplication of Common Fractions	#5	13	Problems 1,3,5,etc.	_____
#6	14-15	Division of Common Fractions	#6	15	Problems 1,3,5,etc.	_____

#7	16	Summary of Common Fractions	#7	17	All Problems	___ ___
#8	18-19	Introduction to Decimal Fractions	#8	20	Problems B: 1 B: 2	_____
#9	21	The Steel Rule: Decimal Divisions	#9	22	Problems A	_____
#10	23	Addition and Subtraction of Decimal Fractions	#10	24-25	Problems A: 1,3,5,etc. B: 1,4,7,10 13,16 C: 1,3,5,7	_____
#11	26	Multiplication of Decimal Fractions	#11	26-27	Problems 1,3,5,etc.	_____
#12	28	Division of Decimal Fractions	#12	28-29	Problems 1,4,7,10 etc.	_____
#13	30	Rounding off Decimals	#13	30-31	Problems A: 1(a,c,e,g) B: 1,3,5,etc.	_____
#14	32	Changing Fractions and Decimals	#14	32-33	Problems A: 1,3,5,etc. B: 1,3,5,etc.	_____
#15	34	Other Uses of Fractions and Decimals	#15	35	Problems A: 1-4 B: 1-7 C: 1,3,5,7	_____
#16	36	The Decimal Equivalent Table	#16	36-37	Problems A: 1,4,7,10, 13,16,19 B: 1,4,7,10, 13,16,19 C: 1(a,c,e,g) C: 2(a,b,c,d) C: 3(a,c,e,g, i,k)	_____
#17	38	Dividing Lines	#17	38-39	Problems: Computation only	_____
#18	40-41	Use of Tables Trade Data	#18	42	Problems A:1-3 B: 1(a,c,e,g,i) B: 2(a,b,c)	_____

#19	43-44	The Micrometer	#19	44-45	Problems B	_____
#20	46	Degree of Accuracy	#20	47-48	Problems A: 1,3 B: 1,3,5 C: 2,4,6,8	_____
#21	49-50	The Units of Linear Measure	#21	50-51	Problems A:1,3 B: 1,3,5 C: 1 D: 1,3,5 E: 1,2	_____
#22	52	Addition and Subtraction of Units of Linear Measure	#22	52-53	All Problems	_____
#23	54	Multiplication of Units of Linear Measure	#23	54-55	All Problems	_____
#24	56	Division of Units of Linear Measure	#24	56-57	All Problems	_____

Hours_____ and Total Hours_____ Unit Test 1 _____

#25	58	Averages	#25	59	All Problems	_____
#26	60-61	Percentage	#26	61-63	Problems A: 1,4,7,10 13,16 B: 1,4,7,10 13,16,19 C: 1,4,7,19	_____
#27	64	Percentage-Additional Applications	#27	65	Problems A: 1,4,7,10, 13,16 B: 1,4,7,10 C: 1,4,7	_____
#28	66-67	Wages	#28	67-69	Problems A: 1,2,3 B: 2,3 C: 1 D: 1,3,5,7,9	_____
#29	70-71	Weights and Costs	#29	72-73	Problems A: 1,3 B: 2,4,6.etc.	_____

#30	74	Factory Cost and Selling Price	#30	75	Problems A: 1,3 B: 1,3 C: 1,3	_____
#31	76	The Circle	#31	77	Problems 1(a,c,e,g,i) 3(a,b,c,d,e,f)	_____
#32	78-79	The Units of Angular Measure	#32	79	Problems A: 1,3,5,7 B: 1,3,5 C: 2,4,6	_____
#33	80	The Protractor	#33	81	Problems 1 A-I	_____
#34	82-84	Triangles	#34	85	Problems 7: a,b,c,d 8: a,b,c,d	_____
#35	86-89	Intersecting Lines	#35	90	Problems C: 1-10	_____
#36	91-94	Parallel Lines	#36	95	Problems B: 2(a-f)	_____
#37	96-97	Squares, Rectangles, and Trapezoid	#37	98	Problems L: 1,2,3	_____
#38	99-100	Arcs of Circles and Tangents to Circles	#38	101	Problems B: 3-8	_____

Hours_____Total Hours_____Unit Test II_____

#39	102-103	Introduction to Symbols	#39	104-105	Problems A: 1,4,7, 10,13,16 B: 1,3,5,7,9 C: 1,3	_____
#40	106	Grouping Symbols	#40	107	Problems A: 1,3,5,etc. B: 1,3,5,7	_____

#41	108-109	Introduction to Equations	#41	110	Problems A: 1,3 B: 1,3 C: 1,3 D: 1,3 E: 1,3	_____
#42	111	How to Solve Equations by Division	#42	112	Problems: 1,3,5,etc.	_____
#43	113	How to Solve Equations by Multiplication	#43	114	Problems 1,3,5,etc.	_____
#44	115	How to Solve Equations by Subtraction	#44	116	Problems 1,3,5,etc.	_____
#45	117	How to Solve Equations by Addition	#45	117-118	Problems 1,3,5,etc.	_____
#46	119	Exponents	#46	120	Problems A: 1 B: 1,4,7 C: 1,3,5,7,9	_____
#47	121	How to Solve Equations by Square Root	#47	121-122	All Problems	_____
#48	123-124	Summary of Equations	#48	124-126	Problems A: 1,4,7,10,etc. B: 2,4,6 C: 1(a,b,c) 3,5,7,9(a-e)	_____

Hours_____Total Hours_____Unit Test III _____

#49	127	Introduction to Ratio	#49	128	Problems 1(a,c,e,g,i) 2(a,c,e) 3(a-d)	_____
#50	129	Ratio Applied to Scale Drawings	#50	130-131	Problems A: 1-10 B: 1,2,3	_____
#51	132	Direct Proportion	#51	133	Problems 1,3,5,etc.	_____

#52	134	Inverse Proportion	#52	135-136	Problems A: 1(a,c,e,g) 3(a,c) B: 1,3,5,7,9 _____
#53	137-138	Introduction to Formulas	Read Pages 137 and 138		
#54	139	Perimeter of a Square	#54	139-140	Problems 2(a,c,e,g,i) 3(a,c,e,g,i) 4,5 _____
#55	141-142	Perimeters of Rectangles and Triangles	#55	142-143	Problems A: 2(a,c,e,g,i,k) 4 B: 1(a-d) 2
#56	144	Circumference of a Circle	#56	145	Problem 1(a,d,g,j) 2(a,c,e) 3(a,d,g) 4,5,6 _____
#57	146	Perimeter of a Semi-Circular Sided Figure	#57	147	Problems 1(a,c,e,g,i) 2(a,c,e,g) 3(a,c,e,g) _____

Hours_____Total Hours_____Unit Test IV_____

#58	148-150	The Units of Area Measure	#58	150-151	All Problems _____
#59	152	Area of a Square	#59	152-153	Problems 1(a,c,e,g,i,k) 2(a,c,e) 3(a,c) 6,7,8 _____
#60	154	Area of a Rectangle	#60	155	Problems 1(a,c,e) 2(a,c,e,g) 3(a,c) 5,7,9 _____
#61	156	Area of a Triangle	#61	157	Problems 1(a,c,e,g) 2(a,c) 3,4,5 _____

#62	158	Area of a Trapezoid	#62	159	Problems 1(a,c,e,g) 2(a,c) 5,6,7	_____
#63	160	Area of a Circle	#63	161	Problems 1(a,d,g,j,m,p,s) 2(a,c) 3,5,7	_____
#64	162	Addition and Subtraction of Area	#64	163-164	Problems A: 1,3 B: 1,3,5 C: 1 D: 1(a,d) 2(a,c) 3(b,d)	_____
#65	165-166	Area of Semi-Circular Sided Figures and Solids	#65	167-168	Problems 1(a,c,e,g) 2(a,c) 3(a,b) 5	_____

Hours_____Total Hours_____Unit Test V_____

#66	169-171	Description of Parallel Sided Solids	Read pages 169-171			
#67	173-175	The Units of Volume Measure	#67	176	Problems A: 1,3,5 B: 1-6 C: 1,3,5,7,9, 1,12	_____
#68	177-178	Volumes	#68	178-179	All Problems	_____
#69	180-181	Volumes of Cylindrical, Semi-Circular Sided and Spherical Ended Solids	#69	182	Problems A: 1,3,5,7 B: 1,3,4,7 C: 1(a,d) D: 2,3,4	_____
#70	183-188	Volumes of Cones and Pyramids	#70	188	Problems A: 1,3,5 B: 1,3,5 C: 1,3 D	_____

Hours_____Total Hours_____Unit Test VI_____

#71	189	Allowances for Edges	#71	190	All Problems	_____
#72	191-193	Allowances for Seams	#72	194	Problems A: 1,2 B: 1-4 C: 1,3 D: 1,2 E: 1,3 F: 1,2 G: 1,3,5 H: 1,3	_____
#73	195-196	Stretchouts of Square Pipes	#73	197	Problems A: 1,3,5 B: 1,3 C: 1-6 D: 1,3,5 E: 1	_____
#74	198	Stretchouts of Rectangular Pipes	#74	198-199	All Problems	_____
#75	200	Stretchouts of Circular Jobs	#75	201	Problems A: 1-4 B: 1-4 C: 1,2	_____
#76	202-203	Stretchouts of Semi Circular Sided Jobs	#76	203	Problems A: 1-3 B: 1-7	_____
#77	204	Stretchouts of Boxes	#77	205	All Problems	_____
#78	206	Number of Pieces From A Sheet	#78	207	All Problems	_____
#79	208	Length of Wire for Edges of Jobs	#79	209	All Problems	_____
#80	210	Length of Arcs of Circles	#80	211	All Problems	_____
#81	212-213	Description of Tapered Solids	Read page 214			
#82	215-218	Law of Right Triangles	#82	218-220	Problems A: 1,4,7,10,13, 16,19,22 B: 1,4,7,10 C: 1,4,7,10	_____

#83	221	Stretchouts of Cones	#83	222	Problems A: 1-4 B: 1,3,5 C: 1-4	_____
#84	223	Roof Pitches	#84	224	Problems A: 1,3,5,7 B: 1,3,6 C: 1-4	_____
#85	225	Bend Allowances	#85	226	Problems A: 1-6 B: 2,4,6,8	_____
#86	227	Surface Speeds of Rotating Cylinders	#86	228	Problems 1(a,c,e) 3,5,7,9	_____

Hours_____Total Hours_____Unit Test VII_____

#87	229-230	Introduction to Trigonometry	#87	231	Problems 1(a,c,d,e,g,i, k,m,o,p) 2(a,d,g,j, m,p,s)	_____
#88	232	Using the Tangent Formula	#88	233	Problems A: 1,3 B: 1,3,5,7 C: 1-4	_____
#89	234	Using the Sine Formula	#89	235	Problems A: 1,3,5 B: 1,3,5,7 C: 1,3,5	_____
#90	236	Using the Cosine Formula	#90	237	Problems A: 1,3,5 B: 1,3,5,7 C: 1-4	_____
#91	238	Selection of Formulas	#91	239-240	Problems 1,3,5,7,9	_____
#92	241-242	Bar Graphs	Read Page 243			
#93	244	Circle Graphs	Read Page 245			

#94	246-248	Line Graphs	#94	249	Problems 2(a,b,c) 3(a,b) 4(a,b)	_____
#95	250	On-The-Job-Applications	#95	250-252	All Problems	_____

Hours_____Total Hours_____Unit Test V111_____

NOTE: READ Pages 253 through 271

FINAL GRADE FOR MATH _____

MEASURING AND LAYOUT TOOLS

COMPETENCIES:

1. Use measuring equipment.
2. Use layout tools.

OBJECTIVES:

1. Match the terms associated with measuring and layout to the correct definition.
2. Identify the semi-precision tools used in the shop.
3. Explain how to read a rule.
4. Identify the precision measuring tools used in the shop.
5. Name the parts of an outside micrometer.
6. Name the parts of the vernier caliper.
7. List the uses of the dial indicator.
8. Identify the equipment used in layout.
9. List uses of a circumference rule.
10. Summarize various uses of a steel square.
11. Name the general protractors and demonstrate their uses.
12. Discuss the uses of a marking gauge.
13. Explain when trammels are used rather than dividers.

LEARNING ACTIVITIES:

1. READ and STUDY the Types of Measuring and Their Uses Information sheet.

2. STUDY the six handouts on the micrometer and vernier calipers:

3. WATCH your instructor demonstrate the proper use of various measuring tools and practice reading the tools correctly.

4. READ pages 9-16 in the Short Course in Metal Shop Theory by Richard Budzik.

5. COMPLETE the questions at the end of the chapter in the text on page 16.

6. OBSERVE a demonstration given by your instructor on layout tools. PRACTICE using various tools in pairs with your classmates.

7. PARTICIPATE in class lecture and discussion on measuring tools and layout.

8. CREATE a large working model of sleeve and thimble of the micrometer. Use different size cardboard mailing tubes.

9. DEVELOP a working model of the Vernier scale and a section of the Vernier caliper. Make the model at least six times the actual size.

10. COMPLETE the assignment sheet Identify Measuring and Layout Tools.

11. COMPLETE the Drawing Lines and Objects assignment sheet.

12. COMPLETE the Reducing Measurements assignment sheet.

13. COMPLETE the Measuring Using a Micrometer Caliper assignment sheet.

14. COMPLETE the Choose the Appropriate Measuring Tool assignment sheet.

15. OPTIONAL: VIEW various videotapes reviewing measuring and layout tools and their uses.

APPLICATIONS:

1. Read a rule.
2. Measure with spring calipers.
3. Measure with a micrometer.
4. Measure with a vernier caliper.
5. Scribe a line on metal.
6. Use a circumference rule.
7. Use a steel square.
8. Use a protractor to layout angles.
9. Use dividers to layout arcs and circles.

EVALUATION/CHECK OUT:

1. Submit your Identify Measuring and Layout Tools assignment sheet.
2. Submit your Drawing Lines and Objects assignment sheet.
3. Submit your Reducing Measurements assignment sheet.
4. Submit your Measuring Using a Micrometer Caliper assignment sheet.
5. Submit your Choose the Appropriate Measuring Tool assignment sheet.
6. Submit your Applications Checklist.
7. Demonstrate your knowledge of the objectives in a test situation.

INFORMATION SHEET

TYPES OF MEASURING EQUIPMENT AND THEIR USES

The term measuring tools applies to those devices used to determine linear or angular measurement. The measurement of distance on a straight line between two points is linear measurement. To take such measurements, there are tools such as steel rules, tapes, slide calipers, vernier calipers, and micrometer calipers.

Tools used for transferring measurements from scales to the work or from the work to the scales are outside calipers, inside calipers, and dividers. The measurement of angles, trueness of surfaces, and the relationship of one surface to another is angular measurement. Angles are measured with protractors, spirit levels, and squares.

TYPES OF RULES

STEEL RULE

The steel rule, incorrectly referred to as a scale, is the simplest measuring tool in the shop. This rule is usually 6 or 12 inches long, although there are other lengths. This rule has four scales with different divisions on the four edges. The lines representing the divisions are called graduations. The different combinations of graduations on a rule are usually given in numbers from No.1 to No. 16. For example, a rule with No. 4 graduations has the first edge in sixty-fourths, the second edge in thirty-seconds, the third edge in sixteenths, and the fourth edge in eighths.

FOLDING METAL AND WOODEN

Folding metal or wooden rulers, usually 2 to 6 feet long, are for general measuring purposes. The folding rule is not for very accurate measurement because the smallest graduation is most often 1/16 of an inch.

STEEL MEASURING TAPES

Steel measuring tapes, are made in lengths from 6 to 300 feet. The 6 foot to 16-foot tapes usually have a curved cross section so they remain rigid when extended but flexible enough to roll up. The longer tapes are flat and require support over their entire length when measuring, otherwise the natural sag causes error in reading.

Measurements are ma with a rule by holding it with its edge on the surface of tne object being measured. This can eliminate errors which can result because of the thickness of

the rule. Read the measurement at the graduation that coincides with the distance being measured. State the reading as so many inches and fractions of an inch.

Rules and tapes are precision made and, like all tools, the quality of service depends upon the care it receives. Following are some suggestions:

1. Wipe frequently with an oily cloth to prevent the formation of rust.
2. An occasional cleaning with fine steel wool will keep the graduations legible.
3. Use the rule carefully so that the ends and edges do not become necked or worn.
4. Use the correct rule for the job at hand. Example: Use a rigid rule to measure the length of screws and bolts and the outside diameter of a pipe. Measure the width of a board with a tape measure.
5. Coat the tool with wax or a rust preventative if it is to be stored for a prolonged period.

TYPES OF CALIPERS

OUTSIDE AND INSIDE CALIPERS

Calipers are designed for transferring measurements from measuring tools to the workpiece or from the workpiece to measuring tools. The two most widely used calipers are: outside calipers for transferring outside measurements, and inside calipers for transferring inside measurements. Calipers are also classified by their joint or hinge, and how their adjustments are made.

The firm joint caliper has the simplest construction. This caliper depends on friction to keep its legs in position after they have been set. The firm joint caliper is the least accurate and the most difficult to adjust; however, firm joint calipers with a screw adjustment are quite accurate.

The legs of spring joint calipers are spread by the tension of a spring against an adjusting nut, which turns on a screw through one of the legs. The points are adjusted by tightening or loosing the adjusting nut.

Lock joint transfer-type outside and inside calipers make it possible to transfer measurements from the inside of cavities, over flanges, and other places where it is necessary to move the legs after they have been set to size. After the legs are set and the joint is locked using the large knurled nut the transfer and binding nut is loosened and one leg is swung away to clear the obstruction. The leg is then moved back against the transfer arm slot on the short

arm and the exact size can be transferred to a ruler for measurement.

Inside or hole diameters are measured with inside calipers. They have straight legs with feet turned outward. To measure the diameter of the hole, hold one caliper leg in contact with one side of the hole. Increase the setting of the caliper and move the other leg from right to left and in and out of the hole. When the caliper is spread to the widest possible point, then remove the caliper and measure the setting with a rule.
To set outside calipers to a particular measurement, open them to the approximate setting. Then place the calipers on the rule and make the final setting by sighting over the leg on the scale and adjusting the leg to the proper dimension. Accuracy of reading depends on proper sighting, reading, adjusting, and feel.

SLIDE CALIPERS

The slide caliper, or sometimes called the caliper rule, are pocket tools. They are made in 3-inch and 5-inch sizes and graduations are in thirty-seconds and sixty-fourths of an inch. They are used where extreme precision is not required.

Slide calipers measure both inside and outside diameters. A locking screw holds the slide caliper jaws in position to maintain the setting. The words "IN" and "OUT" are stamped on the frame near the stationary jaw under the two reference lines, and are for reading the scale while making inside or outside measurements. The reference lines are separated by the distance equal to the outside dimensions of the rounded tips when the caliper is closed.

The outside diameter of round stock is measured by moving the jaws of the caliper into firm contact with the surface of the stock. Read the measurement at the reference line marked OUT. The inside diameter of a hole, or the distance between two surfaces, is measured by inserting only the rounded tips of the caliper jaws into the hole or between two surfaces. The measurement is read on the reference line stamped IN.

VERNIER CALIPERS

A vernier caliper consists of an L-shaped frame with an engraved scale and a sliding jaw to match the arm of the L. Usually one side of the caliper is calibrated for outside measurements and the other side is calibrated for inside measurements. The advantage of a vernier caliper over the slide caliper is that more precise measurements can be made because of the vernier scale. Pocket-model verniers measure from 0 to 3 inches. Verniers also come in sizes up to 4 feet long. When using vernier calipers you must be able to read a vernier scale.

As with any precision measuring tool, the vernier caliper must not be forced on the work. Slide the assembly until the jaws almost contact the work. Lock the clamping screw and make the final adjustment with the fine adjusting nut. The jaws must engage the work firmly but not tightly. Lock the unit to the beam, remove it from the work carefully, and make your reading.

MICROMETER CALIPER

The micrometer caliper is better known as a micrometer or "mike." It works on the principle of recording the advance of a fine pitch screw through any number of turns or fraction of a turn. The micrometer consists principally of a highly accurate ground screw, or spindle, which is rotated in a fixed nut, thus opening or closing the distance between two measuring faces on the ends of the anvil and spindle. A piece of work is measured by placing it between the anvil and the spindle face and rotating the spindle by means of a thimble until the anvil and spindle both contact the work. The dimension of the workpiece is found by reading the indicated graduations on the sleeve.

On micrometers graduated to measure in inches, the pitch of the screw thread on the spindle is 1/40 of an inch, or 40 threads per inch. One complete revolution of the thimble advances the spindle face toward or away from the anvil face exactly 1/40 or 0.025 of an inch.

The longitudinal line on the sleeve is divided into 40 equal parts that correspond to the number of threads on the spindle. Therefore, each vertical line is 1/40 or 0.025 inch and every fourth line which is longer than the others designates hundreds of thousandths of and inch. For example, the line marked "1" represents 0.100 inch, and "2" is 0.200 inch.

The beveled edge of the thimble is divided into 25 equal parts with each line representing 0.001 inch. The lines are numbered consecutively. Rotating the thimble from one of these lines to the next moves the spindle 0.001 inch, two divisions moves the spindle 0.002 inch. To move through twenty-five divisions is one complete revolution, or 0.025 inch.

To read the micrometer in thousandths of an inch, multiply the number vertical divisions visible on the sleeve by 0.025 and add the number of thousandths indicated by the line on the sleeve.

Small micrometers, such as the 0 to 1 inch, measure small work. The micrometer is held in the palm of the right hand with the knurled portion of the thimble between the thumb and the forefinger. The frame is held downward with either or

both small fingers, pressing the micrometer against the heel of the hand for firm support. The piece to be measured is held with the left hand. The thimble is turned with the thumb and forefinger of the right hand to advance the spindle until it touches the piece with a slight pressure. The applied pressure by the micrometer should be enough to make it snug but free enough to allow it to slide over the work with a slight drag.

HERMAPHRODITE CALIPER

The hermaphrodite caliper is used to mark a line parallel to an edge. It is particularly useful in drawing several lines parallel to each other. When used in this manner, it is a layout tool. The caliper is also used to measure from the edge to a groove or from an edge to the edge of hole.

Following are some suggestions for proper care of calipers:

1. Never place calipers on work that is revolving in a machine.
2. Keep cleaned and lightly oiled.
3. Check the accuracy of vernier calipers periodically by measuring an object of known dimensions.
4. Follow the manufacturer's recommendations for adjusting the accuracy of vernier calipers.
5. Store vernier calipers in a wooden box lined with cloth.
6. Protect anvil and spindle faces on micrometers from damage and never clean with an abrasive or a file.

TYPES OF SQUARES

Squares are primarily aids for checking the trueness of angles and for laying out angles and lines on materials. Most squares have a scale marked on their edge for measuring.

STEEL SQUARE

The steel square, also called a framing square, has two arms at right angles to each other. The longer arm is the "body" or "blade" and the shorter arm is the "tongue." The length of these two arms is usually 24 inches and 16 inches, respectively. Each edge of an arm contains a scale with divisions in eighths and sixteenths of an inch. The most common uses for the steel square are laying out and squaring up large work, and for checking the flatness and the squareness of large surfaces. To square a piece, place the square at right angles to adjacent surfaces and observe if any light shows between the work and the square. The object is not square if light is seen.

TRY SQUARE

The try square has two parts at right angles to each other; a thick handle and a thin steel blade. Most try squares have a scale on the blade for measuring. The blade length varies from 2 inches to 12 inches. The try square is for setting and checking lines on surfaces that must be at right angles to each other.

COMBINATION SQUARE

A combination square has movable and interchangeable heads called a SQUARE head, a PROTRACTOR head, and a CENTER head. Most often only one head at a time is used on a thin blade that has four engraved scales, two on each side. Combination squares have a wide range of applications and are among the most useful tools that a craftsman has.

A combination square consists of a tempered steel blade, with a scale, on which is mounted one of the three interchangeable heads. The heads slide on the blade in a central groove to permit easy adjustment. They can be adjusted to any position along the blade, and they can easily be removed to allow separate use of the square head as a level and the blade as a ruler.

Following are some suggestions to follow to properly care for squares.

1. Keep the blades and heads of combination sets clean.
2. Apply a light coat of oil on all metal surfaces to prevent rusting.
3. Wipe off oil before using.
4. Store squares away from other tools to prevent damage.

TYPES OF GAUGES

Gauging, which is the term used when checking parts with various gauges, differs somewhat from measuring. Measuring requires the skillful use of precision measuring tools to determine the exact size of the piece; whereas, gauging simply shows whether the piece is made within specified tolerances. Listed below are various types of gauges:

1.	Plug gauge	Checks hole diameters.
2.	Go and no-go gauge	Checks the upper and the lower dimension limits of a part.
3.	Ring gauge	Checks external diameters and roundness

4.	Snap gauge	Used as a ring gauge.
5.	Thread plug and ring gauge	Checks threads for the correct thread fit.
6.	Radius and fillet gauge	Checks radius on inside and outside corners.
7.	Screw pitch gauge	Checks number of threads per inch.
8.	Center gauge	Checks thread-cutting tools for proper grinding angles and alignment on machine tools.
9.	Drill-point gauge	Checks drill-points for the correct 59 degree angles.
10.	Dial indicator	Used to check alignment of workpiece or machine parts.

PARTS OF A MICROMETER

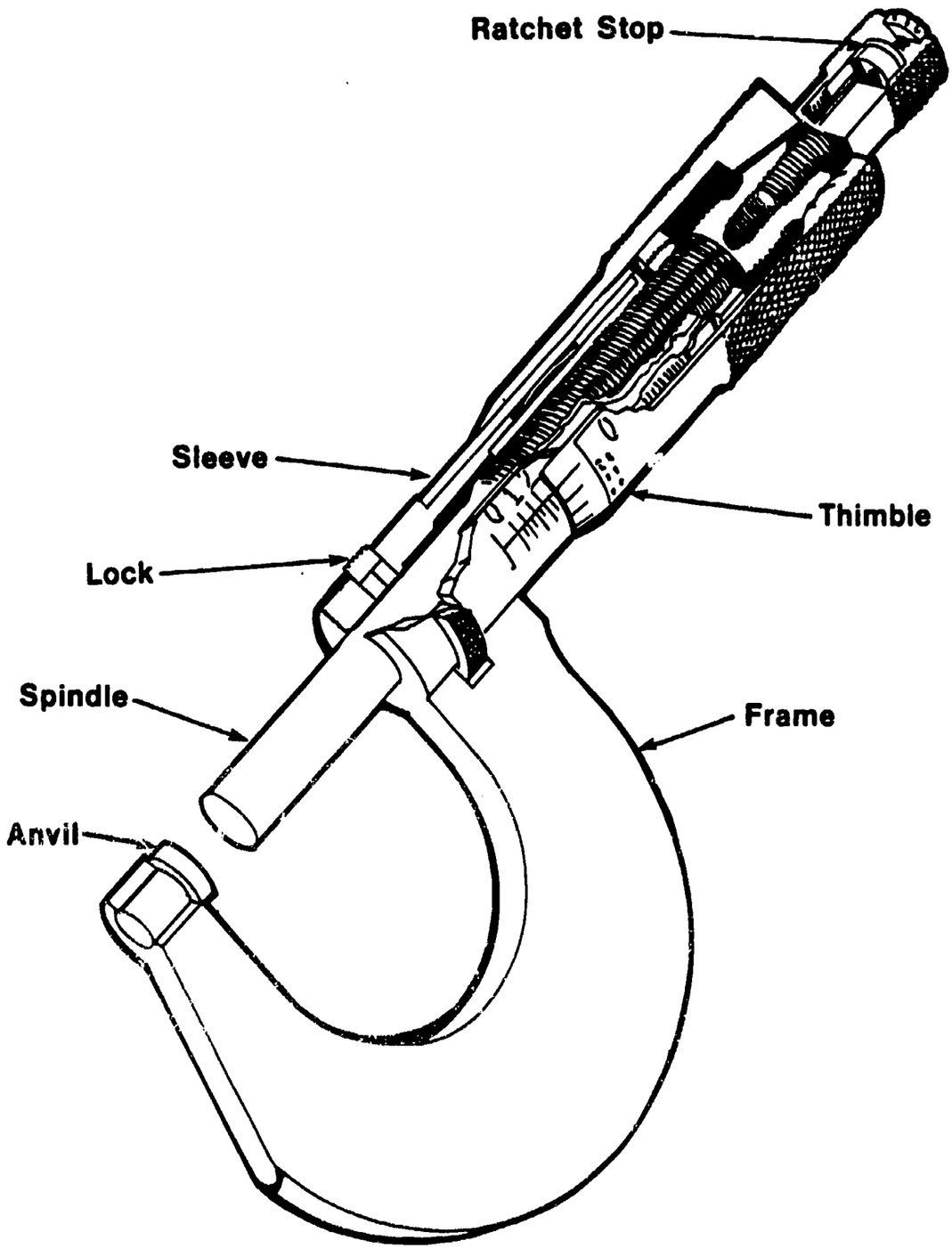

SLEEVE GRADUATIONS FOUND ON A MICROMETER

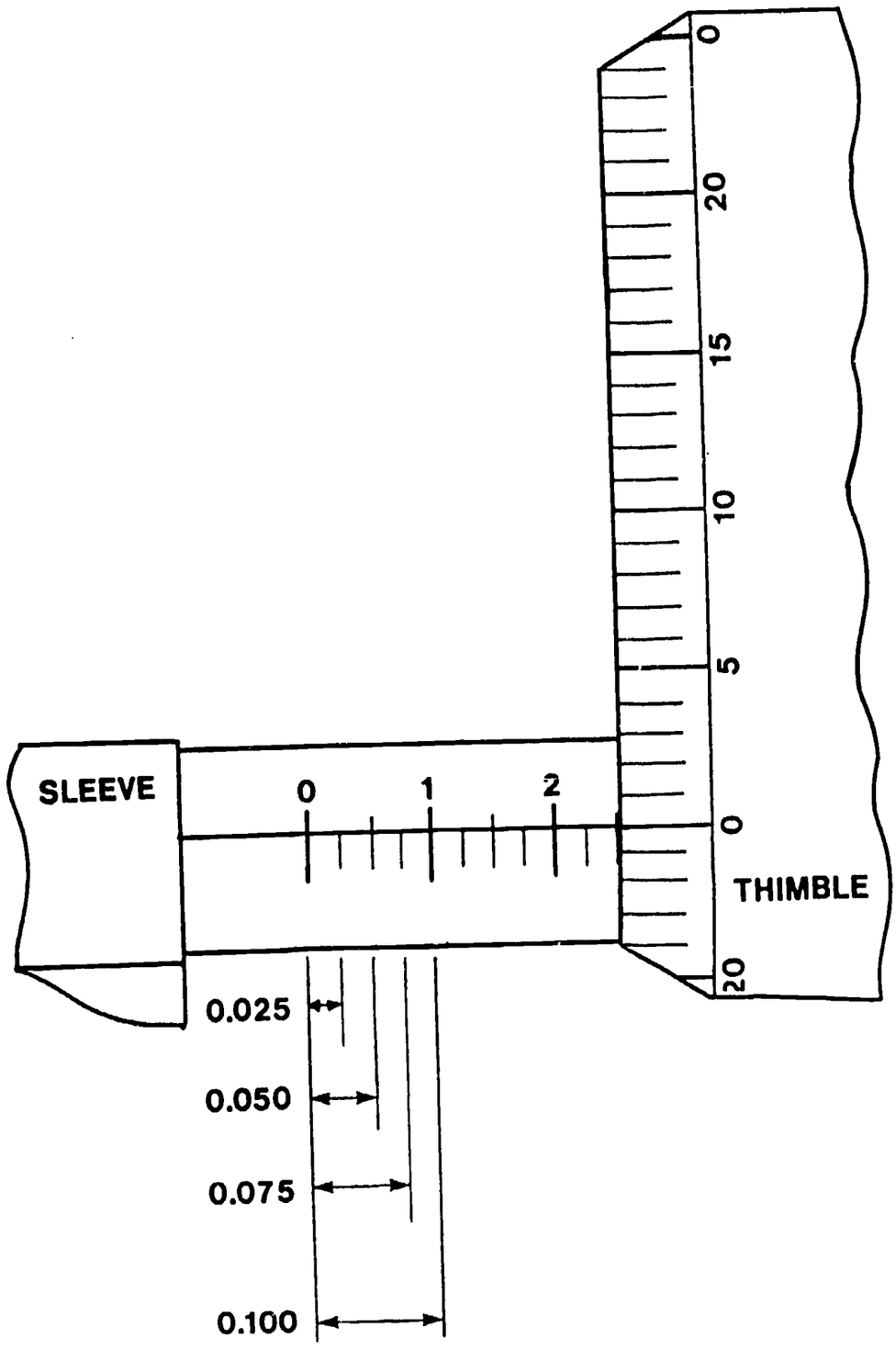

THIMBLE GRADUATIONS FOUND ON A MICROMETER

Thimble has 25 Graduations to 24 on the Sleeve Scale

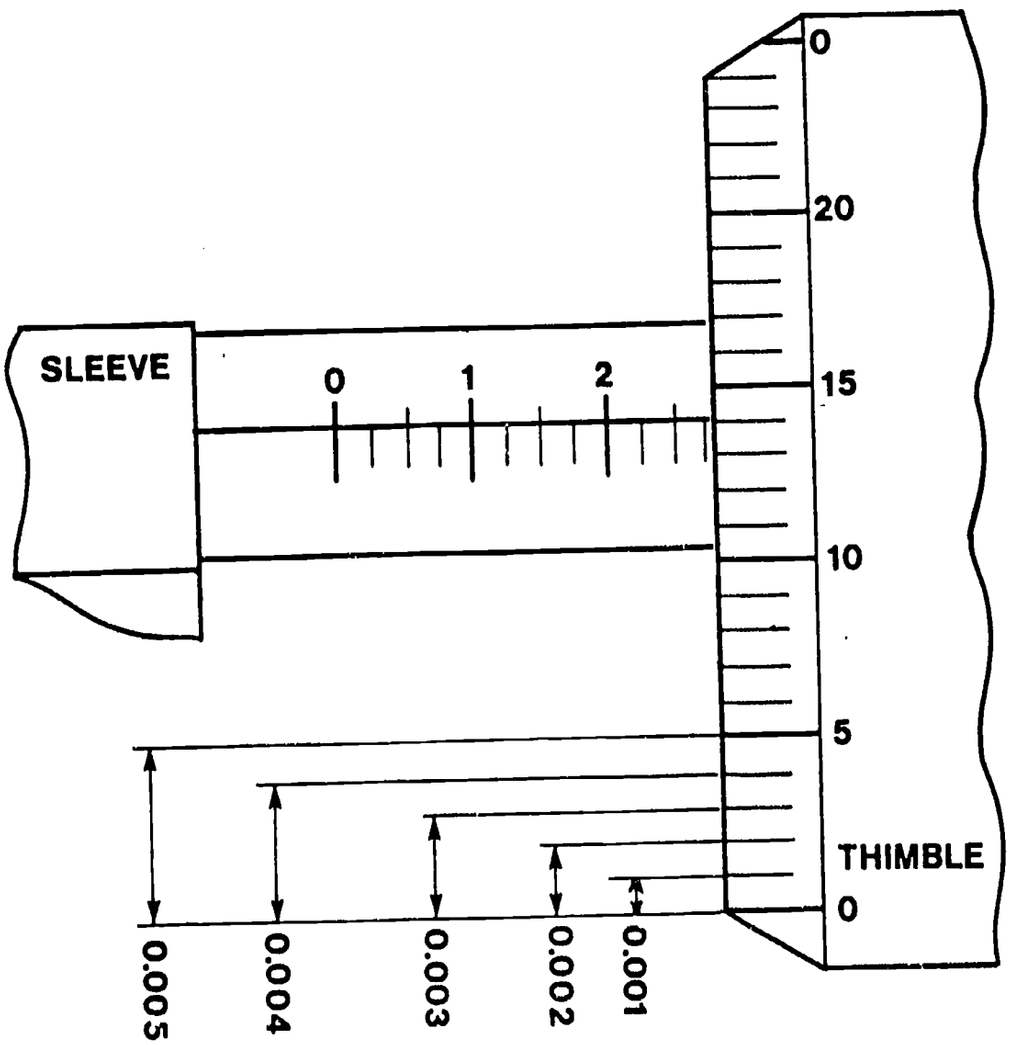

PARTS OF A VERNIER CALIPERS

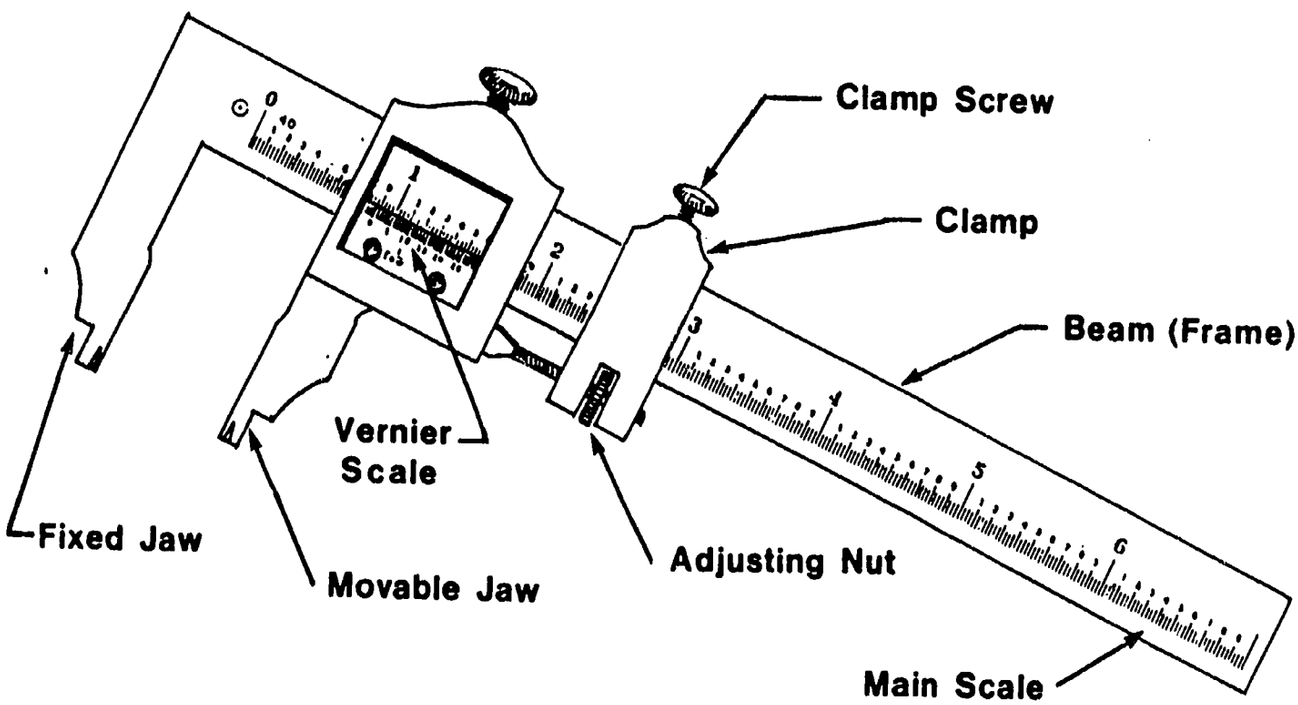

550

VERNIER SCALE GRADUATIONS

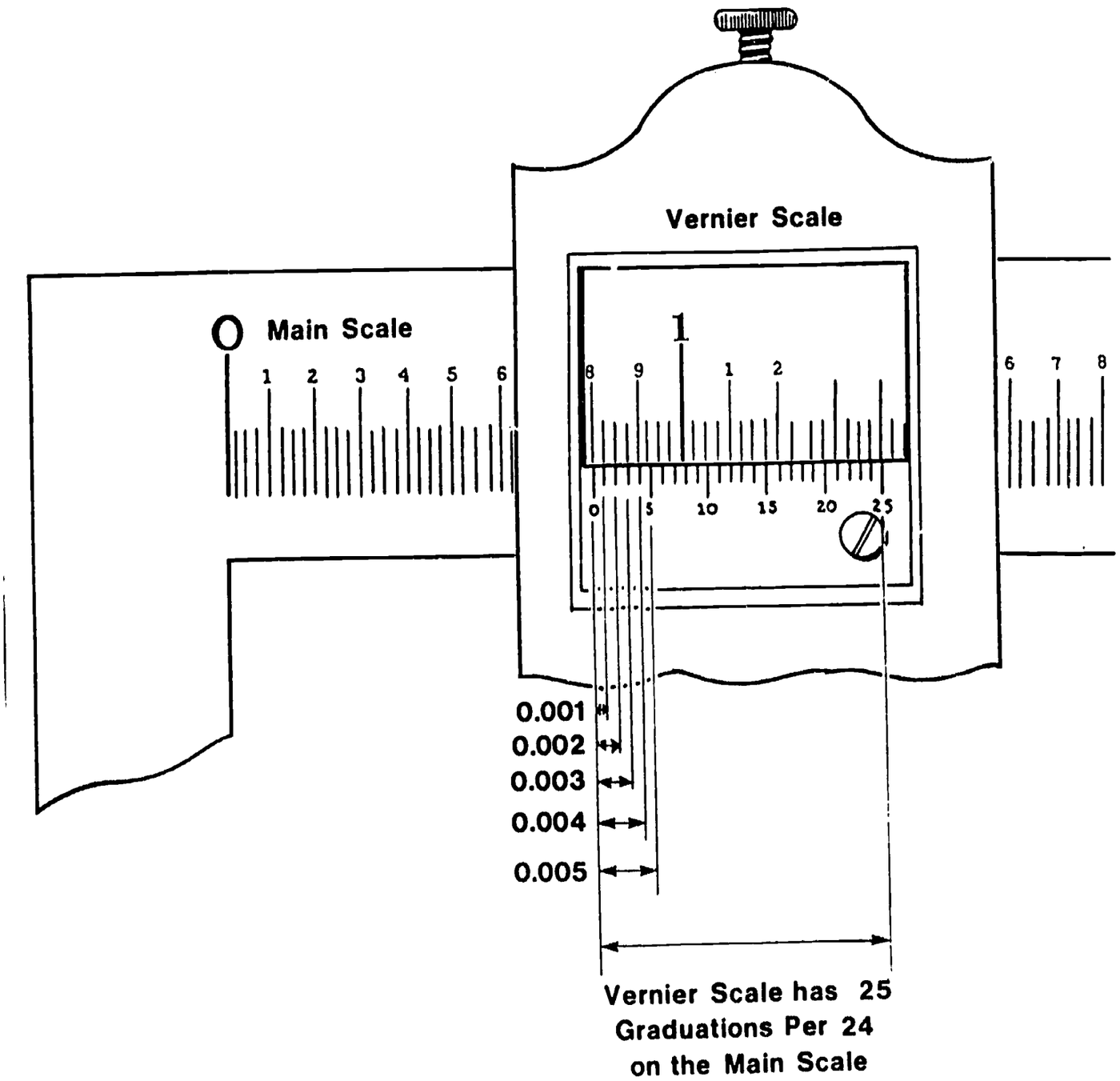

BEAM GRADUATIONS FOUND ON A VERNIER CALIPERS

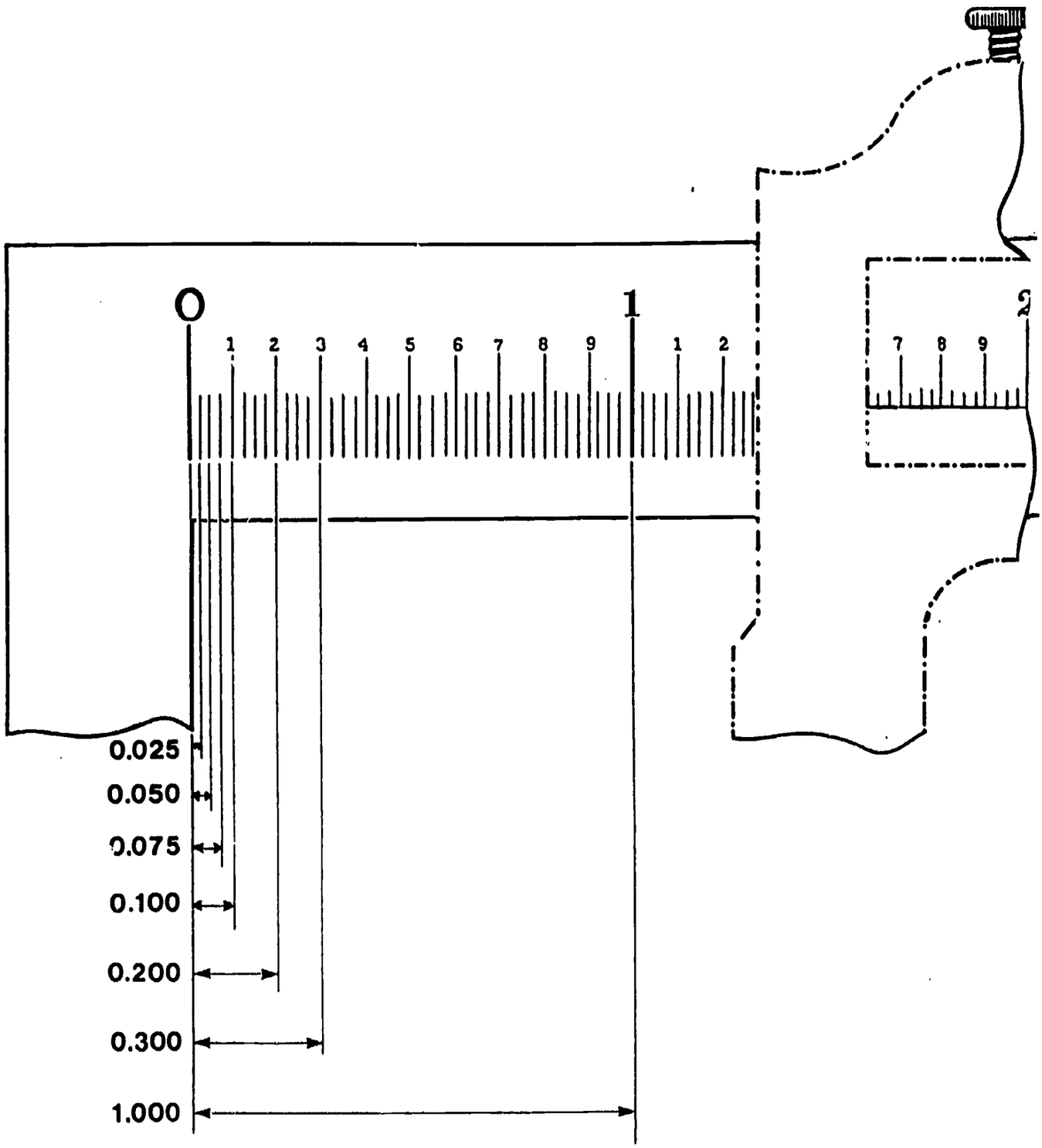

ASSIGNMENT SHEET

IDENTIFY MEASURING AND LAYOUT TOOLS

In your classroom your instructor has numbered several measuring and layout tools. Identify each of the tools and describe its purpose below.

	TOOL NAME	PURPOSE
1.		
2.		
3.		
4.		
5.		
6.		
7.		
8.		
9.		
10.		

ASSIGNMENT SHEET

DRAWING LINES AND OBJECTS

Use a ruler to complete the following.

1. Draw lines the following lengths.

   a. 3 1/8"

   b. 1 3/4"

   c. 2 1/4"

   d. 4 3/16"

   d. 2 15/16"

2. Draw squares with each side the following lengths.

   a. 3"

   b. 2 3/8"

554

3. Draw triangles with the following sides.

a. 1 3/4" x 2" x 2 1/4"

b. 1" x 1 7/8" x 2"

555

ASSIGNMENT SHEET

REDUCING MEASUREMENTS

Reduce each of the following lengths to their smallest form. Use feet and inches for each. Use the back of the page for figuring your work.

1. 13 inches = _____ foot _____ inches
2. 9 inches = _____ feet _____ inches
3. 15 inches = _____ foot _____ inches
4. 25 inches = _____ feet _____ inches
5. 16 3/4 inches = _____ foot _____ inches
6. 21 15/16 inches = _____ foot _____ inches
7. 19 7/8 inches = _____ foot _____ inches
8. 5 4/8 inches = _____ feet _____ inches
9. 11 14/16 inches = _____ feet _____ inches
10. 26 6/8 inches = _____ feet _____ inches
11. 34 2/8 inches = _____ feet _____ inches
12. 21 11/4 inches = _____ foot _____ inches
13. 8 16/8 inches = _____ feet _____ inches
14. 48 17/16 inches = _____ feet _____ inches
15. 72 inches = _____ feet _____ inches
16. 96 inches = _____ feet _____ inches
17. 120 inches = _____ feet _____ inches
18. 168 inches = _____ feet _____ inches
19. 30 15/16 inches = _____ feet _____ inches
20. 1 yard 19 21/16 inches = _____ feet _____ inches

ASSIGNMENT SHEET

MEASURE USING A MICROMETER CALIPER

Your instructor has tagged and numbered various workpieces. Using the micrometer caliper, measure each workpiece and record your findings on the lines below.

1. _____

2. _____

3. _____

4. _____

5. _____

6. _____

7. _____

8. _____

9. _____

10. _____

11. _____

12. _____

557

ASSIGNMENT SHEET

CHOOSE THE APPROPRIATE MEASURING TOOL

Your instructor has created a series of various measuring jobs. You are to choose the correct measuring tool to use in each situation and record it on the following lines.

1. _____

2. _____

3. _____

4. _____

5. _____

6. _____

7. _____

8. _____

9. _____

10. _____

PATTERN DEVELOPMENT

COMPETENCY:

Use parallel lines, radial lines, triangulation, and combination methods of development to complete basic and complex sheet metal layouts.

OBJECTIVES:

1. Explain when each of the pattern development methods are used.
2. Identify the types of fittings that are made using parallel line development, radial line development, and triangulation.
3. Describe the procedure for laying out a round taper pattern.
4. State the principles of parallel line development.
5. Explain the adaptation of the principles of parallel line development to round pipe fittings.
6. State the principle for the development of the intersection line of two pipes, or the miter line.
7. State the principles and procedures for triangulation.
8. Describe how to determine true lengths for pattern layout.
9. Explain the application of triangulation to the pattern layout for a round taper.
10. State the principles and procedures for radial line development.

LEARNING ACTIVITIES:

1. COMPLETE the readings and labs as assigned on the Commonly Used Fittings assignment sheet.

2. COMPLETE the readings and labs as assigned on the Round Fittings assignment sheet.

3. COMPLETE the readings and labs as assigned on the Triangulation assignment sheet.

APPLICATIONS:

1. Layout out a rectangular duct with a double angle to given standards using parallel line development.
2. Layout a pattern for intersecting pipes to given standards using parallel line development.
3. Layout a pattern for round elbows to given standards using parallel line development.

4. Layout a pattern for a pyramid to given standards using triangulation.
5. Layout a pattern for a rectangular transition to given standards using triangulation.
6. Layout a pattern for a round taper to given standards using triangulation.
7. Layout a pattern for a round taper to given standards using radial line development.
8. Layout a taper on a pitch pattern to given standards using radial line development.

EVALUATION/CHECK OUT:

1. Submit the following assignment sheets:
   - Commonly Used Fittings
   - Round Fittings
   - Triangulation
2. Submit your completed Applications Checklist

COMMONLY USED FITTINGS

ASSIGNMENT SHEET

This assignment sheet corresponds with the book, Today's 40 Most Frequently Used Fittings, 4th Edition by Richard Budzik.

Check with your instructor to determine which of the following activities you need to complete. Place a check before those fittings in the "Assigned" column. After you have completed the fittings, you instructor will initial your successful completion in the "Completed" column.

ASSIGNED	COMPLETED	FITTING NUMBER	PAGE NUMBER	DESCRIPTION
_____	_____	1	50	Square Pipe
_____	_____	1-1	52	Rectangular Pipe
_____	_____	2	54	90 degree Square Elbow with Square Throat and Heel
_____	_____	3	56	90 degree Change Elbow with Square Throat and Heel
_____	_____	4	58	90 degree Curved Elbow with Square Throat
_____	_____	5	60	90 degree Change Elbow with Curved Throat
_____	_____	6	62	90 degree Change Elbow with Curved Throat and Heel
_____	_____	7	64	90 degree Elbow with Square Troat and Curved Wrapper
_____	_____	8	66	45 degree Angle Elbow with Curved Throat and Heel
_____	_____	9	68	45 degree Angle Change Elbow with Curved Throat and Heel

_____	_____	10	70	90 degree Clinch Tee with Curved Throat and Straight Back (4-piece pattern with closed or full corners)
_____	_____	10 A	72	Short Method for Fitting 10 (2-piece pattern with open corners)
_____	_____	11	74	90 degree Two-Way Y Branch with Curved Throat and Heel
_____	_____	12	76	Angle Two-Way Y Branch with Straight Throat and Heel
_____	_____	13	78	90 degree One-Way Y Branch with Curved Throat and a Combined Straight and Curved Heel
_____	_____	13 A	80	Short Method for Fitting 13 (3-piece pattern with heel and cheeks as one pattern)
_____	_____	14	82	Change Joint with Three Sided Straight
_____	_____	14 A	84	Short Method for Fitting 14 (one-piece pattern)
_____	_____	15	86	Change Joint - Center Flare, Two Sides Straight
_____	_____	15 A	88	Short Method for Fitting 15 (one-piece pattern)
_____	_____	16	90	Change Joint with Offset, Two Sides Straight
_____	_____	17	92	Change Joint - Center Flare, Straight on Both Ends

_____	_____	18	94	Offset with Straight Heels
_____	_____	18 A	96	Short Method for Fitting 18 (2-piece pattern)
_____	_____	19	98	90 degree Elbow with Square Throat and Heel Combined
_____	_____	20	100	90 degree Left-Handed Rectangular Change Elbow (also known as a Goldberg or Airplane)
_____	_____	21	102	90 degree Center Flare-Rectangular or Rectangular Elbow
_____	_____	22	104	Plain Offset with Curved Heels
_____	_____	23	106	Change Offset with Curved Heels
_____	_____	24	108	Transition Change Joint with Two Sides Straight
_____	_____	24 A	110	Short Method for Fitting 24 (1-piece pattern)
_____	_____	25	112	Transition Change Joint- Flare with One Side Straight
_____	_____	25 A	114	Short Method for Fitting 25 (one-piece pattern)
_____	_____	26	116	Transition Change Joint- Center Flare, Straight on Both Ends, One Side Straight
_____	_____	27	118	Double Offset with Flat Cheeks and Heels
_____	_____	28	120	90 degree Square Throat and Heel Transition Elbow

_____	_____	29	122	Plain Transition Offset
_____	_____	30	124	Transition Change Offset
_____	_____	31	126	90 degree Transition Elbow
_____	_____	32	128	90 degree Transition Change Elbow
_____	_____	33	130	90 degree Transition Y Branch
_____	_____	34	132	2-Way Transition Y Branch - Straight One Way and 90 degree One Way
_____	_____	35	136	Round 4-Piece Elbow
_____	_____	36	138	90 degree Tee Intersecting a Round Pipe
_____	_____	37	142	45 degree Tee Intersecting a Round Pipe
_____	_____	38	146	Round 3-Piece Offset
_____	_____	39	150	Square to Round
_____	_____	40	152	Round Taper
_____	_____	40 A	154	Short Method for Fitting 40
_____	_____		156	Special Advanced Fitting - Transition Joint with all Sides Tapering and Changing

SUPPLEMENTAL ACTIVITIES

_____	_____	S1	158	End Caps
_____	_____	S2	160	4-Piece Crossbroken Plenum with Sunk End Cap
_____	_____	S3	162	Filter Box - Single

_____	_____	S4	164	Flexible Connection
_____	_____	S5	166	Roof Curb
_____	_____	S6	168	Hood - Pittsburg Seam Construction
_____	_____	S7	170	135 degree Gooseneck with Curved Heel and Throat
_____	_____	S8	172	Louver - Rectangular
_____	_____	S9	174	Access Door - Hinged
_____	_____	S10	176	Straight Clinch Tee
_____	_____	S11	178	Clinch Tee - Straight 45 degree Throat (4-piece)
_____	_____	S12	180	Change Elbow for Air Cleaner
_____	_____	S13	182	Tee on a Pitch
_____	_____	S14	184	Curved Tee on Curved Elbow
_____	_____	S15	186	Clinch "T" Straight 45 degree Throat with Poke Damper
_____	_____	S16	188	Belt Guard
_____	_____	S17	190	Mitered Pipe
_____	_____	S18	192	Square Louver with Outside Flange
_____	_____	S19	194	Curved Elbow with Splitter Vanes
_____	_____	S20	196	Clinch T-Flat Cheeks (4-piece)
_____	_____	S21	198	Corner Elbow with Clinch Edge
_____	_____	S22	200	Angle Elbow with 3 Movable Vertical Direction Vanes

_____	_____	S23	202	Transition Joint with T - Take-Off
_____	_____	S24	204	Closed Radius Pipe
_____	_____	S25	206	Transition Plenum
_____	_____	S26	208	Two-Way Angle Y Branch 45 degree and 60 degree
_____	_____	S27	210	90 degree Three-Way Y Branch with Curved Throat and Heel
_____	_____	S28	212	Transition Y Branch with Square Throats and Straight Heel
_____	_____	S29	214	45 degree Transition Change Angle
_____	_____	S30	216	90 degree Transition Change Elbow - Center Flare
_____	_____	S31	218	Transition Offset Elbow
_____	_____	S32	222	Transition Change Offset Elbow
_____	_____	S33	226	Double Offset
_____	_____	S34	228	Double Transition Offset
_____	_____	S35	230	90 degree Transition Change Elbow with Square Throat and Curved Wrapper
_____	_____	S36	232	Change Joint with Three Sides Straight
_____	_____	S37	232	Change Joint - Center Flare, Two Sides Straight
_____	_____	S38	236	Transition Offset Change Joint with Three Sides Tapering
_____	_____	S39	238	Transition Change Joint With All Sides Tapering

_____	_____	S40	240	Transition Change Joint With all Sides Tapering
_____	_____	S41	242	Transition Change Joint With All Sides Tapering
_____	_____	S42	244	Transition Change Joint With 4 Sides Tapering
_____	_____	S43	246	Rectangular Pipe
_____	_____	S44	248	90 degree Straight Elbow
_____	_____	S45	250	90 degree Straight Change Elbow
_____	_____	S46	252	Curved Elbow
_____	_____	S47	256	Plain Change Joint
_____	_____	S48	258	90 degree Curved Change Elbow

ROUND FITTINGS

ASSIGNMENT SHEET

This assignment sheet corresponds with the book, Practical Sheet Metal Layout: Round Fittings Used Today Including Methods and Techniques of Fabricating Round Work, second edition, by Richard Budzik.

Check with your instructor to determine which of the following activities you need to complete. Place a check before those fittings in the "Assigned" column. After you have completed the fittings, you instructor will initial your successful completion in the "Completed" column.

ASSIGNED	COMPLETED	FITTING NUMBER	PAGE NUMBER	DESCRIPTION
		ROUND FITTINGS		
_____	_____	1	2	Round Pipe
_____	_____	2	4	Round Drawband
_____	_____	3	6	2-Piece 45 degree Round Angle
_____	_____	3A	8	Quarter Pattern Method for Round Elbows, Angles, and Offsets
_____	_____	4	10	2-Piece 30 degree Round Angle
_____	_____	4A	12	3-Piece 45 degree Round Angle
_____	_____	4B	14	4-Piece 60 degree Round Angle
_____	_____	4C	16	5-Piece 80 degree Round Angle
_____	_____	5	18	2-Piece 90 degree Round Elbow
_____	_____	6	20	3-Piece 90 degree Round Elbow

_____	_____	7	22	4-Piece 90 degree Round Elbow
_____	_____	7A	24	Radius Method for Round Elbows, Angles and Offsets
_____	_____	8	26	5-Piece 90 degree Round Elbow
_____	_____	8A	28	7-Piece 90 degree Round Elbow
_____	_____	8B	30	9-Piece 90 degree Round Elbow
_____	_____	8C	32	11-Piece 90 degree Round Elbow
_____	_____	9	34	Round Offset
_____	_____	9A	36	Rise Method for Round Elbows, Angles and Offsets
_____	_____	10	38	Round Roof Jack on an Angle
_____	_____	11	40	Round Roof Jack on a Corner or Ridge
_____	_____	12	42	Rectangular Tee Intersecting a Round Pipe at a 90 degree on Center
_____	_____	13	44	Square Tee Intersecting a Round Pipe at a 45 degree Angle
_____	_____	14	46	Round Tee Intersecting a Round Pipe at a 90 degree Angle - Equal Diameters
_____	_____	14A	48	Round Tee Intersecting a Round Pipe at a 90 degree Angle - Unequal Diameters
_____	_____	15	50	Round Tee Intersecting a Round Pipe at a 90 degree Angle - Flat on One Side

_____	_____	16	52	Round Tee Intersecting a Round Pipe at a 45 degree Angle - Equal Diameters
_____	_____	16A	54	Round Tee Intersecting a Round Pipe at a 45 degree Angle - Unequal Diameters
_____	_____	17	56	Round Tee Intersecting a Round Pipe at a 45 degree Angle - Flat on One Side
_____	_____	18	58	2-Way Round Y Branch with Equal Diameters
_____	_____	19	60	Round Vertical Tee on a 3-Piece 90 degree Round Elbow
_____	_____	20	62	Round Boot Tee on Round Pipe
_____	_____	21	64	Round Equal Taper
_____	_____	21A	66	Round Equal Taper - Slight Variation in Diameters
_____	_____	22	68	Round Equal Taper - One Side Straight
_____	_____	23	70	Round Offset - Equal Taper
_____	_____	24	72	Round Weather Cap (Discharge Stack)
_____	_____	25	74	Round Ventilator
_____	_____	26	74	Round Tapering Roof Jack
_____	_____	27	78	Round Tapering Tee Intersecting a Round Pipe at a 90 degree Angle
_____	_____	28	80	Round Tapering Tee Intersecting a Round Pipe at a 45 degree Angle

_____	_____	29	82	Round Tee Intersecting a Taper at a 90 degree Angle
_____	_____	30	84	Round Tee Intersecting a Taper at a 45 degree Angle

OBLONG FITTINGS

_____	_____	1	90	Oblong Pipe
_____	_____	2	92	90 degree Oblong Elbow (Horizontal)
_____	_____	2A	94	90 degree Oblong Elbow (Vertical)
_____	_____	2B	96	45 degree Oblong Angle (Horizontal)
_____	_____	3	98	Oblong Offset (Horizontal)
_____	_____	3A	100	Oblong Offset (Vertical)
_____	_____	4	102	Oblong Tee on a Round Pipe
_____	_____	5	104	Oblong Boot Tee
_____	_____	6	108	45 degree Oblong Angle Tee
_____	_____	7	110	Oblong to Round Taper - Diameter Equal to Width
_____	_____	8	112	Oblong to Oblong Taper - Three Sides Straight and Equal Widths

TRIANGULATION

ASSIGNMENT SHEET

This assignment sheet corresponds with the book, Practical Sheet Metal Layout: Fittings Used Today that Require Triangulation, Including the Theory of Triangulation, second edition, by Richard Budzik.

Check with your instructor to determine which of the following activities you need to complete. Place a check before those fittings in the "Assigned" column. After you have completed the fittings, you instructor will initial your successful completion in the "Completed" column.
Check with your instructor to determine which of the following activities to complete. Place a check next to those activities under the "ASSIGNED" column. Layout the fittings as assigned.

ASSIGNED	COMPLETED	FITTING NUMBER	PAGE NUMBER	DESCRIPTION
_____	_____	1	2	Transition Change Joint All Sides Tapering
_____	_____	2	6	Exhaust Hood
_____	_____	3	8	Transition Change Joint with all sides tapering
_____	_____	4	12	Twisted Transition with all sides tapering
_____	_____	5	16	Double Offset
_____	_____	6	18	Double Transition Offset
_____	_____	7	20	Transition Offset Angle
_____	_____	8	24	Transition Offset Elbow
_____	_____	9	28	Transition Change Offset Elbow
_____	_____	10	32	Transition Change Offset Y-Branch with Straight Throat and Heel
_____	_____	11	34	Transition Change Offset Y Branch
_____	_____	12	38	Square to Round

_____	_____	13	40	Rectangular to Round Short Method
_____	_____	14	42	Rectangular to Round with Seams on the Corners
_____	_____	15	44	Rectangular to Round
_____	_____	16	46	Square to Round with Two Sides Straight
_____	_____	17	50	Offset Rectangular to Round
_____	_____	18	52	Offset Rectangular to Round with One Side Straight
_____	_____	19	56	Rectangular to Round Offsetting Both Ways
_____	_____	20	60	Round Taper
_____	_____	21	62	Round Taper with One Side Straight
_____	_____	22	64	Round Offset Taper
_____	_____	23	66	Square Discharge Stack (Weather Cap)
_____	_____	24	68	Rectangular Discharge Stack (Weather Cap)
_____	_____	25	70	Roof Jack on a Pitch
_____	_____	26	74	Square to Round Roof Jack on a Corner
_____	_____	27	76	Square to Round at an Angle or Pitch
_____	_____	28	78	Rectangular to Round Boot T Elbow
_____	_____	29	82	Rectangular to Round Boot T Elbow with One Side Straight
_____	_____	30	86	Round Y Branch with Equal Spread

_____	_____	31	90	Round Y Branch Flat on One Side
_____	_____	32	94	Round Y Branch with Different Diameter Branches and Equal Spread
_____	_____	33	98	Y Branch from Square to Round
_____	_____	34	102	Round Three-Way Branch
_____	_____	35	106	Round Tapering Elbow (Reducing Elbow)

OBLONG SECTION

_____	_____	1	112	Oblong to Oblong - Center Flare Both Ways
_____	_____	2	114	Oblong to Round
_____	_____	3	116	Rectangular to Oblong
_____	_____	4	118	Oblong to Oblong with One Side Straight
_____	_____	5	120	Round to Oblong Y Branch
_____	_____	5	126	Double Offset

FABRICATION

- HAND TOOLS
- SHEET METAL MACHINERY
- CUTTING AND NOTCHING SHEET METAL
- PUNCHING AND DRILLING SHEET METAL
- BENDING AND SHAPING SHEET METAL
- FORMING AND ROLLING MACHINES

HAND TOOLS

COMPETENCIES:

1. Select appropriate hand tools for a job.
2. Use hand tools safely.

OBJECTIVES:

1. Demonstrate the proper and safe use of hand tools.
2. Identify, by their proper names, common hand tools.
3. Describe how to use common hand tools.
4. List safety precautions for use with hand tools.
5. Describe the basic purpose of various hand tools.
6. Identify proper procedures for maintaining hand tools.
7. Summarize appropriate storage procedures for hand tools.

LEARNING ACTIVITIES:

1. READ the Hand Tool Safety Information sheet.

2. READ and STUDY the Hand Tool chart summarizing various hand tools used in the trade.

3. COMPLETE the Hand Tool Matching assignment sheet.

4. PARTICIPATE in class lectures and discussion on hand tools.

5. OPTIONAL: VIEW videotapes as assigned by your instructor.

6. IDENTIFY the sheet metal tools used to make an object displayed by your instructor. Compare your list with three other students in the class. Discuss differences and arrive at one list with the tools listed in the order used. Be prepared to share your findings with the class.

7. PARTICIPATE in the lab created by your instructor. You will find various damaged hand tools provided by your teacher or brought in from your workplace. Select the appropriate method to correct the damage and demonstrate it to your classmates.

EVALUATION/CHECK OUT:

1. Submit your Hand Tool Matching assignment sheet.
2. Demonstrate your knowledge of the objectives in a test situation.

INFORMATION SHEET

HAND TOOL SAFETY

1. Always focus your full attention on the work.
2. Use the appropriate tool for the job you are doing.
3. Demonstrate proper use of the tool.
4. Maintain the tools in their best condition.
5. Store the tools in their appropriate place.
6. Cut away from your body when using sharp-edged tools.
7. Always carry sharp-edged tools with the cutting edge or point down.
8. Never carry sharp or pointed tools in your pockets.
9. When using a file, always include a handle.
10. Do not strike hardened metal or tools with a hard-faced hammer.
11. Avoid mushroomed or battered heads on metal tools by keeping them ground smooth and square.
12. Do not use worn or broken tools.

INFORMATION SHEET

TYPES OF HAND TOOLS AND THEIR USES

TYPE	DESCRIPTION AND USE
TYPES OF PLIERS	
Slip joint	All-purpose pliers.
Vice grip	Pliers with a locking action used to hold material tightly.
Needle nose	Pointed pliers used for holding objects of various sizes.
Channellock	Adjustable pliers used for holding objects of various sizes.
Flat nose	Pliers with flat jaws and small grooves used for forming and holding work.
Round nose	Pliers with flat jaws rounded on outside and are used in holding and forming.
Locking pliers	Pliers adjust easily to lock to any size with desired amount of pressure; release lever opens jaws; can be used as nonlocking pliers.
TYPES OF SCREWDRIVERS	
Common (Standard)	General purpose flat-tipped screwdriver. Used on bolts and screws with straight-slot heads.
Phillips	Used on bolts and screws with cross-slot heads.
Offset	Used on screws in hard-to-get places.

TYPES OF WRENCHES	
Adjustable	General purpose wrench.
Box-end	Enclosed-end wrenches of various sizes.
Open end	Wrenches with open ends which are various sizes.
Combination	Wrenches with one open end and a closed end of equal size.
Allen	Wrenches which fit into a hexagon-shaped recess or hole in a screw.
Socket	Used with ratchet or breakover handles to tighten or loosen recessed bolt heads.

TYPES OF HAMMERS	
Ball peen	General purpose hammer with a curved face and round head.
Mallet	Made of good hickory or rawhide and used where a metal hammer would dent or damage.
Riveting	Has a slightly curved, square face and beveled edges to prevent marking metal as rivets are set.
Setting	Has a square, flat face and flat sides for closing up a Pittsburgh lock.
Sledge	Used when more striking force is required.
Blacksmith	A small sledge-like hammer used in forging and metal shaping.
Nail	Not considered a sheet metal tool but found and used in almost all sheet metal shops.
Body or raising	Used mostly as a finish tool in cornice work and in stainless steel.

TYPES OF PUNCHES	
Prick	Used to make small dents or establishing points for trammel points and wing dividers.
Center	Used for marking the location point and the center of holes to be drilled.
Drift	Used to align bolt holes or punch pins or bolts from holes.
Solid	Used to remove larger bolts and shafts from holes.
Pin	Used to remove small split or taper pins from machine parts.
Tinner's hand punch	Used to punch small holes in light gauge metal.
Iron hand	Used on heavier gauge material.

TYPES OF CHISELS	
Flat cold	Used to cut off bolt or rivet heads.
Diamond point	Used to cut a V-groove or sharp corners on inside corners.
Round nose	Used to cut rounded grooves.
Cape	Used to cut slots, corners, or keyways.

TYPES OF SNIPS	
Left cut	Cuts to the left around curves and 90 degree corners.
Right cut	Cuts to the right around curves and 90 degree corners.

Straight cut	Cuts straight lines or curves; one style has very short blades for special cutting needs.
Bulldog	Heavy duty snips used for all general cuts and thicker metals.
Circular	For cutting inside circles and metal close to an obstacle.
Straight blade	Best for cutting straight lines.
Combination blade	Will cut curves by letting the metal slide over the top blade with ease, and will cut straight.
Double blade	Specifically designed to cut 1/8-inch wide slit in preformed metal duct or sheet metal pipe.
Aviation	Cuts thicker metal and makes small irregular curves and even 90 degree corners.

TYPES OF FILES

Machinist	A double-cut file used to remove metal quickly.
Mill	A single-cut file used for general filing when a smooth finish is required.
Lathe	A long angle single-cut fil used for filing on the lathe.
Rasp	A coarse-cut file used for soft metals and plastics.
Jewelers	Various-shaped files which are used by jewelers and tool and die makers.
Curved tooth	A coarse-cut file used for rough cuttings on softer nonferrous metals.

TYPES OF STAKES	
Blowhorn	Short tapered horn at one end and a long tapered horn at the other; used in forming, riveting, or seaming tapered objects.
Beakhorn	Thick tapered horn at one end, and rectangularly shaped horn at the other; used for forming riveting and seaming.
Candlemold	Two horns of different tapers; used in forming, riveting, and seaming long, flaring articles.
Needlecase	Small tapered horn at one end, and a small, rectangular horn with a rounded beveled edge at the other; used for very fine hand work.
Creasing	Double, rectangularly shaped horn and contains a number of grooved slots for creasing metal and bending wire; used for forming, riveting, or seaming small, tapering objects.
Hollow mandrel	Slot running through its length in which a bolt slides, permitting the stake to be fastened to the bench at any angle or length; rounded end is used for riveting and seaming ropes, the other end is used for forming laps, riveting, and double seaming.
Solid mandrel	Double shank so that either the rounded or flat side can be used.
Double-seaming	Stake may be used either horizontally or vertically; used for double seaming large work.
Conductor	Two cylindrical horns or different diameters and is used when forming, riveting, and seaming tubes.
Hatchet	Sharp, straight edge, beveled along one side; used for making sharp bends and bending edges.

Teakettle	Four differently shaped heads and is useful in many operations for which other stakes are not adapted.
Bevel-edge	Flat, square head with a bevel edge on the outside of the head for double seaming.
Common Square	Flat square-shaped head with a long shank and is used for general operations.
Coppersmith	Rounded edge on one side and a sharp rectangular edge on the other; used for general operations.
Bottom	Fan-shaped, beveled edge, slightly rounded; used for dressing burred edges on a disk, for special double seaming, and for turning small flanges.
Hand dolly	Flat face, two straight edges, one convex edge, and one concave edge; used for bucking rivets and double seaming.

TYPES OF THREADING TOOLS

Taper taps	Used to start the threading.
Plug taps	Used to cut threads nearly to the bottom of a hole.
Bottoming tap	Used to finish threading to the bottom of a hole.
Pipe tap	A tapered tap used to provide threads of various pipe sizes.
Split dies	Can be adjusted slightly for different thread fits.
Solid dies	Has no adjustments.
Diestock	Used to hold dies when threading.
Tap wrench	Used to hold taps when threading.
Thread restorer	Used to repair damaged thread.

TYPES OF CLAMPING DEVICES	
Machinist vise or bench vise	General purpose vise.
Toolmakers vise	A vise used in toolmaking which may be swiveled in many directions.
Parallel clamp	Used to clamp small parts for layout.
C-clamp	Used in set-up of machines and workpieces.

TYPES OF MEASURING TOOLS	
Steel rules	Used for measuring linear distances; graduated to 1/16-inch; usually 24 inches, 36 inches, or 48 inches long.
Circumference rules	Used to find the circumference of a circle when the diameter is known; also used as a straightedge and for other activities in layout work.
Retractable steel tape rules	Take up little space, are handy to carry and easy to use.
Inside-reading folding rules	Commonly used folding tape measure; usually 6 feet long.

TYPES OF DIVIDERS	
Trammel	Used to construct large circles and arcs.
Wing	Used to construct small circles and arcs and to transfer dimensions.

TYPES OF SQUARES	
Try	Used for accuracy in layout work; blades are available in 6-inch, 8-inch, 10-inch, and 12-inch

	lengths.
Combination	Used for layout accuracy with 45 degree and 90 degree angles.
Framing	Used in layout work for accuracy because all layout must start from a square corner.

TYPES OF PROTRACTORS

Bevel	Used to find or construct angles of different degrees.
Steel swinging-blade	Used to find or construct angles of different degrees; lighter and easy to carry in a tool box.

MISCELLANEOUS HAND TOOLS

Hacksaw	Used to cut various types of metal.
Pop-rivet gun	Rivet-setting tool designed for rivets to be inserted and set from one side in aluminum, steel, and copper; rivets range in size from 1/8 inch to 1/4 inch.
Rivet set	Made with a deep hole used to pull tinner's rivets through metal, and a cup-shaped hole to set the rivets; a hole in the side is for releasing burrs.
Multiple-use dolly	Used to buck the head of a rivet as it is pulled together.
Pipe crimper	Used to reduce the size of the end of a pipe; permits one end of a pipe to fit inside another piece that is the same size.
Hand seamer	Makes bends on light gauge metal which is inconvenient to bend on a brake.
Clip punch	An efficient tool for fastening seams in duct work; an "ear" is cut and bent out to be hammered tight with a hammer.

Dovetailer	Used to cut clips for joining round pipe to a flat or round piece of metal.
Hand notcher	Used for notching ductwork for "S" and drive clips.
Duct stretcher	Used to hook into drive cleats in ductwork to pull the duct together.
Hand groover	Tool that is struck with a hammer to form hammer-lock pipe seams by hand; also used in completing Pittsburgh seams.

ASSIGNMENT SHEET

HAND TOOL MATCHING

---

1. Match types of sheet metal snips to their uses. Write the correct letter in the blank.

_____1. For cutting inside circles and metal close to an obstacle	a. Straight cut
_____2. Cuts to the left around curves and 90 degree corners	b. Bulldog
_____3. Specifically designed to cut 1/8-inch wide slit in preformed metal duct	c. Straight blade
_____4. Cuts straight lines or curves; one style has very short blades for special cutting needs	d. Combination blade
_____5. Best for cutting straight lines	e. Right cut
_____6. Cuts to the right around curves and 90 degree corners	f. Circular
_____7. Heavy duty snips used for all general cuts and thicker metal	g. Left cut
_____8. Will cut curves by letting the metal slide over the top with ease; and will also cut straight	h. Double cut

2. Match types of punches to their uses. Write the correct letter in the blanks.

_____1. Used for marking the location to be drilled; point is ground to approximately 90 degrees	a. Iron hand punch
_____2. Used to punch small holes in light gauge metal; punches and dies range in size from 1/16-inch to 9/32-inch, and are easily changed	b. Center punch
_____3. Used to make small dents or establishing points for trammel points and wing dividers; point	c. Tinner's hand punch
	d. Prick punch

is ground to approximately 30 degrees

_____4. Used on heavier gauge material; punches and dies range from 1/16-inch to 1/2-inch, and are easily changed

3. Match the types of hammers to their uses. Write the correct letter in the blanks.

_____1. Made of good hickory or rawhide and used where a metal hammer would dent or damage material

_____2. Has a square, flat face and flat sides for closing a Pittsburgh lock

_____3. Not considered a sheet metal tool, but is found and used in almost all sheet metal shops

_____4. Has a slightly curved, square face and beveled edges to prevent marking metal as rivets are set

_____5. General purpose hammer with a curved face and round head

_____6. Used mostly as a finish tool, in cornice work, and in stainless steel work

a. Ball-peen hammer

b. Mallet

c. Setting hammer

d. Body or raising hammer

e. Nail hammer

f. Riveting hammer

4. Match types of pliers to their uses. Write the correct letter in the blanks.

_____1. Long nose and handle for deeper reach into work area

_____2. Jaws are positioned and locked into place by engaging tongue in proper groove; a series of channels give wide range of jaw openings; jaws should not slip even under heavy pressure

_____3. Pliers adjust easily to lock at any size with desired

a. Combination pliers

b. Adjustable pliers

c. Locking pliers

d. Long nose pliers

amount of pressure; release lever opens jaws; can also be used as nonlocking pliers

_____4. For holding an object that is difficult to hold in ones hand; should not be used as a wrench for removing nuts

5. Match types of miscellaneous hand tools to their uses. Write the correct letter in the blanks.

_____1. Makes bends on light gauge metal which is inconvenient to bend on a brake

_____2. Used to cut clips for joining round pipe to a flat or round piece of metal

_____3. Used for cutting rivets, bolts, and metal; point is ground to 70 degree

_____4. Used to buck the head of a rivet as it is pulled together

_____5. Used for notching duct work corners for "S" and drive clips

_____6. Used to reduce the size of the end of a pipe; permits one end of pipe to fit inside another piece that is the same size

_____7. Steel plate with various size holes designed to hold the tapered end of stakes firmly so stakes can be used for forming metal

_____8. Designed to fit various size nuts within its capacity; comes in various sizes

_____9. Tool that is struck with a hammer to form hammer-lock pipe seams by hand; also used in completing Pittsburgh seams

a. Stake plate

b. Flat cold chisel

c. Rivet set

d. Hand groover

e. Hand seamer

f. Pipe crimper

g. Stakes

h. Dolly bar

i. File

j. Dovetailer

k. Adjustable wrench

l. Pop-rivet gun

m. Hand notcher

n. Hacksaw

_____10. Shaping tools used with hand tools to complete numerous operations as tube forming, taper forming, seaming, riveting

_____11. Made with a deep hole used to pull tinner's rivets through metal; and a cup shaped hole to set the rivets

_____12. Rivet-setting tool designed for rivets to be inserted and set from one side in aluminum, steel, and copper

_____13. Used to remove burrs, to square the end of band iron, and to straighten uneven edges

530

SHEET METAL MACHINERY

COMPETENCY:

Select and use sheet metal machinery safely.

OBJECTIVES:

1. Identify common sheet metal working machines by their proper names.
2. Describe the basic purpose of various sheet metal working machines.
3. List general safety precautions for working with machines.
4. Explain the difference between a cornice break, a bar folder and a press brake.
5. Describe how to maintain and care for various pieces of machinery.
6. Demonstrate the proper and safe use of machines.
7. Explain the use of the computer in sheet metal work.
8. Identify how laser technology benefits the fabrication process.

LEARNING ACTIVITIES:

1. READ and STUDY the Machine Tools information sheet.

2. READ "The Role of the Computer in the Sheet Metal Trade" from Practical Sheet Metal Layout: Specialty Items Used Today, pages 575-623.

3. DISCUSS safety requirements for the operation of all machines. READ the Machine Tools Safety information sheet.

4. OPTIONAL: VIEW the videotapes on Sheet Metal Machinery as assigned by your instructor.

5. WATCH your instructor show and demonstrate the use of various machines.

6. PARTICIPATE in a class discussion on Machine Tools.

7. COMPLETE the Machine Tools assignment sheet.

8. COMPLETE the Machine Tools in Your Work Place assignment sheet.

9. READ the article "Program Presses and Press Brake."

10. READ the article "Lasers Find a Niche in Manufacturing."

EVALUATION/CHECK OUT:

1. Submit your Machine Tools assignment sheet.
2. Submit your Machine Tools In Your Workplace assignment sheet.
3. Demonstrate your knowledge of the objectives in a test situation.

INFORMATION SHEET

MACHINE TOOL SAFETY

When using machine tools, keep in mind the following safety rules:

1. Read all of the manufacturer's safety recommendations thoroughly.

2. Inspect and serve power tools regularly by qualified maintenance personnel.

3. Familiarize yourself with the operations procedures of each tool or machine.

4. Inspect electrical cords regularly to make sure they are in good condition. Do not leave cords in places where they may be run over or damaged. Be sure all power tools are grounded with three-pronged conductor cords.

5. Put safety guards in place before starting.

6. Remove rings, watches, and other jewelry before using power tools.

7. Be sure your hands are dry.

8. Make all adjustments and inspections before you turn on the power.

9. Wear all required safety equipment (for example goggles or a dust mask).

10. Be sure the materials being worked are securely clamped in the machines and will clear all machine parts when moving.

11. When work is completed: shut off tool; disconnect from power source; remove blades, bits or other cutter from the tool; and store properly.

INFORMATION SHEET

MACHINE TOOLS

GENERAL INFORMATION

1. Bench tools: Small, hand operated tools generally anchored to a bench and used for one or more operations on cylindrical projects.

2. Portable power tools: Small, electrically or air-operated tools that can be comfortably moved from job to job.

3. Manual and power-operated floor tools: Medium to large tools that are usually secured in a permanent position for forming and working with sheet metal.

4. Brakes: Machines for making straight line bends to specified angles for rectangular components.

5. Rolls: Machines for making cylindrical components.

TYPE OF TOOL/MACHINE	PURPOSE
BENCH TOOLS	
Adjustable bar folder	For folding, bending, hemming, setting down, and making drive clips.
Double seam machine	For double seaming flat bottoms on straight or flared cylindrical articles
Burring machine	For turning edges on circular discs such as bucket bottoms and for turning edges for double seaming cylindrically shaped projects.

Beading machine	For various beading operations with single and ogee rolls.
Turning machine	For making rounded edges for wiring operations on cylinders, and for double seaming.
Grooving machine	A specialized machine for grooving longitudinal seams in cylinders by grooving and flattening in one operation of the carriage.
Crimping and beading machine	For crimping and beading the end of a cylinder.
Setting down machine	For setting down seams on containers of various shapes.
Elbow edging machine	For turning the edges of elbow gores so the gores can be assembled as a complete elbow with tight or adjustable joints.
Combination rotary machine	Has numerous interchangeable rolls to facilitate several different operations simply by changing to the desired set of rolls.
Easy edger	Turns perfect flanges on curved metal edges.
Multi-purpose bench lever shear	Throatless shear which will cut straight or curved lines without distortion in heavy to light metals.

Cleat bender	A tool used to turn drives on preassembled duct.
Bench vise	For clamping stock to be worked on; the swivel base is the most common type.
PORTABLE POWER TOOLS	
Reciprocating saw	A portable electric key hole saw with various types and sizes of blades for cutting wood, metal, plastics, and heavier steel.
Circular saw	A general purpose saw used for cutting wood, metal, and plastics.
Angle grinder	Generally used with attachments for cleaning joints after a welding process.
Hand drill	Generally used for light drilling jobs; comes in various types such as variable speed, reversible, 1/4", 3/8" and 1/2" capacities.
Heavy duty hand drill	Generally used for drilling heavy or thick materials.
Hammer drill	Heavy duty drill with percussion bit for drilling masonry, brick and tile.
Unishear	A hand held metal cutting shear for heavy metals.

Nibbler	Separates metal by punching 1/8" pieces out of the metal with a rapid punching action to speed up pattern cutting with light to heavy gauge metals.
Power double cuts	For cutting a cylinder into two or more pieces with minimum waste and time.
MANUAL AND POWER OPERATED FLOOR TOOLS	
Hand brake	A machine used for bending or forming flat metal into various shapes.
Box and pan brake	Has removeable sections called fingers to allow extra working clearance, and used for bending the fourth side of a box without distorting the other three sides.
Press brake	Has special dies that it presses metal into; it is more of a production tool
Squaring shear	Has a manually operated foot peddle for straight line cuts. Available in various lengths.
Power Shear	Similar to square shear except it is motor operated and run by hydraulic or mechanical arrangement.
Slip roll	Indispensable for making pipe and small round projects.

Power roll	For production of cylindrical objects from heavier materials.
Power hack saw	Used to speed up production of cutting light steel pipe and angles.
Cut-off saw	Used to cut heavier steel at different angles or in straight cuts.
Band saw	Has a continuous cutting blade for cutting mild steel.
Angle iron shear, notcher and bender	Used to cut, notch and bend angle iron, and is a must when angle iron is being worked with.
Drill Press	Used for drilling holes in several pieces of light metal at one time or drilling single holes in heavier metals.
Bench or floor grinder	Used for grinding, sharpening, or cleaning up welded materials.
Resistance Spot Welder	A special machine for sheet metal attachment because it bonds two pieces of metal together without the use of any added materials.
Rotary circle shear	Used for cutting sheet metal discs for bottoms and tops of cans and can also be used for slitting sheets of metal.

Standard Pittsburgh machine	Used to make Pittsburgh locks that have to be closed by hand with a setting hammer or electric or air Pittsburgh hammer.

599

ASSIGNMENT SHEET

MACHINE TOOLS

In the classroom your instructor has numbered several machine tools or pictures of machine tools. Identify each of the machine tools and describe its purpose below.

MACHINE NAME	PURPOSE
1.	
2.	
3.	
4.	
5.	
6.	
7.	
8.	
9.	
10.	

ASSIGNMENT SHEET

MACHINES TOOLS IN YOUR WORKPLACE

Identify six types of machines in your workplace. List them below. Indicate what the machine is used for and any special safety precautions.

1. Machine: _____

Purpose: _____

Safety Precautions: _____

2. Machine: _____

Purpose: _____

Safety Precautions: _____

3. Machine: _____

Purpose: _____

Safety Precautions: _____

4. Machine: _____

Purpose: _____

Safety Precautions: _____

5. Machine: _____

Purpose: _____

Safety Precautions: _____

6. Machine: _____

Purpose: _____

Safety Precautions: _____

Program presses and press brakes

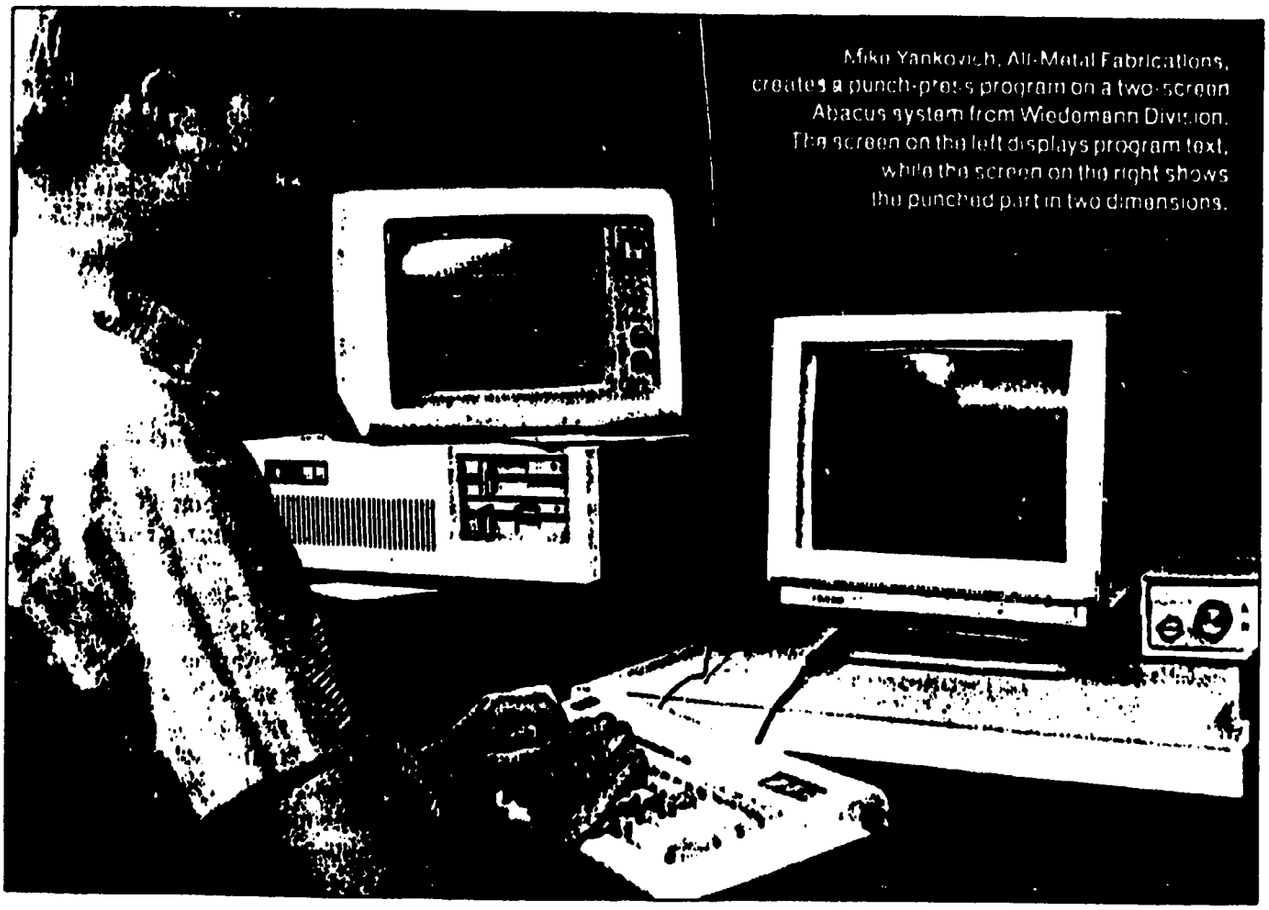

Mike Yankovich, All-Metal Fabrications, creates a punch-press program on a two-screen Abacus system from Wiedemann Division. The screen on the left displays program text, while the screen on the right shows the punched part in two dimensions.

Software for numerical control of fabricating equipment uses English-language programming commands and 3-d graphics to minimize programming time and reduce errors.

By Brad F. Kuvin, assistant editor

Fabricators realize that to compete in a worldwide marketplace, they must increase productivity and decrease operating costs. Computer-numerical-controlled fabricating equipment has long promised these benefits, but many companies have been reluctant to purchase complex machines, fearing that programming the controllers would cost too much in operator training, and that long learning periods would disrupt schedules

To ease the plunge into cnc, producers of cnc equipment and companies that specialize in computer control have simplified programming. They have enhanced software with graphics capabilities and English-language commands, and have made controllers that do much with little programming by operators.

Upgrade punch presses

Punch-press manufacturers offer programming hardware and software as options with new equipment or as retrofits for existing cnc equipment. The software uses English-language prompts and understandable menu formats displayed on a crt screen to lead programmers through program development, from blank to finished part. Graphics, some with full color and in 3-d,

show what completed parts will look like before fabricating, letting the operator make corrections to reduce scrap and to minimize reprogramming.

A few companies offer programming packages only, for use with punch presses from most vendors. All sell postprocessors that translate programs into the appropriate machine-operating language to create nc tapes that run punch presses from U.S. Amada, Behrens, Strippit, Trumpf, Wiedemann, and others.

Manufacturers of presses and brakes and companies that specialize in cnc sell software with graphics capabilities that program with English commands.

The programs include features like these:

- Hole definition—round, square, or rectangular.
- Variable part scale and orientation.
- Automatic tool selection and assignment to appropriate turret station, for turret punch presses, to minimize turret rotation.
- Tool-path generation, including nibbling.
- Graphical display of clamp location, including safety-zone checking to assure that clamps are distant from tool hits so parts don't warp.
- Tool-path optimization, to minimize punching time.
- Calculation of percentage of sheet used.
- Estimated punching time.

Software sellers

Techware Computing Co., St. Petersburg, Fla., offers Cam-Tech II software, which runs on Dec personal computers, and an optional board to run the program on IBM pc's. Paired with Cad-Tech computer-aided-design software, the package programs turret-punch presses—a tape punch prepares nc tapes, or a direct-numerical-control terminal downloads programs directly into a press controller.

Geopoint IV software from Anderson O'Brien, St. Paul, Minn., takes drawings generated by Cadkey design software and unfolds it into a flat piece, calculating blank size. The software runs on IBM or compatible hardware.

Fab-Ware software, which runs on Hewlett-Packard 9000-series computers, comes from S.B. Whistler & Sons, Buffalo. Merry Mechanization, Wyoming, Minn., offers SMP-81 software that runs on computers from Apollo, Data General, Dec, H-P and Prime Computer. Combining Punch-Ware and Bend-Line programs from RME Systems, Rancho Cucamonga, Calif., allows programming of 3-d parts and production of nc tapes. The software runs on Dec minicomputers. Multi-Punch, from Accugraph Corp., Don Mills, Ontario Canada, runs on the IBM PC-AT.

Some punch-press manufacturers have developed programming systems that allow an operator or engineer to set up a machine and to work up part programs in an office, away from the manufacturing floor. These include Amacom hard- and software to program punch presses from U.S. Amada; TC-APT from Trumpf America, which programs laser-, flame-, and plasma-cutting equipment and Trumpf punch presses; Strippit/Di-Acro also sells software called MultiPunch, that runs on Apple computers; and Wiedemann Division sells Abacus systems.

For job shops

Who uses remote graphics-based computer-programming stations to program punch presses? Tom Karlinski, product specialist for Strippit/Di-Acro, says job shops that purchase cnc machines look to ease the transition from manual to cnc fabrication, and will frequently add a computer-based programming setup to an equipment order. Among the reasons fabricators have grown more eager to acquire pro-

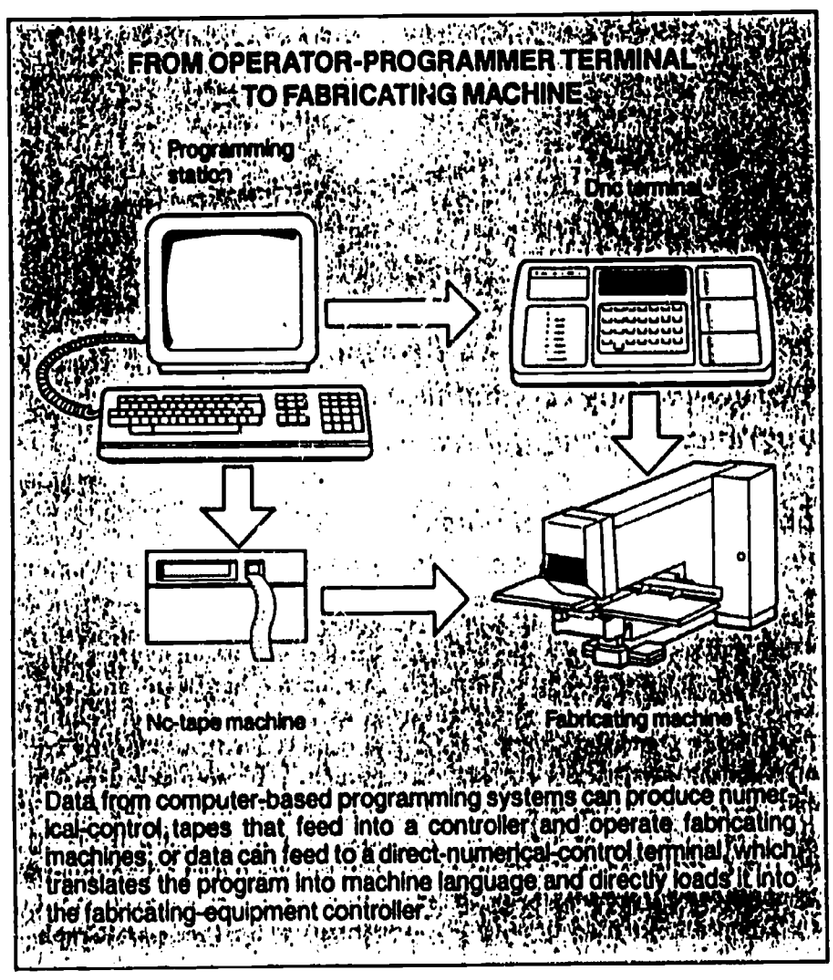

Data from computer-based programming systems can produce numerical-control tapes that feed into a controller and operate fabricating machines; or data can feed to a direct-numerical-control terminal which translates the program into machine language and directly loads it into the fabricating-equipment controller.

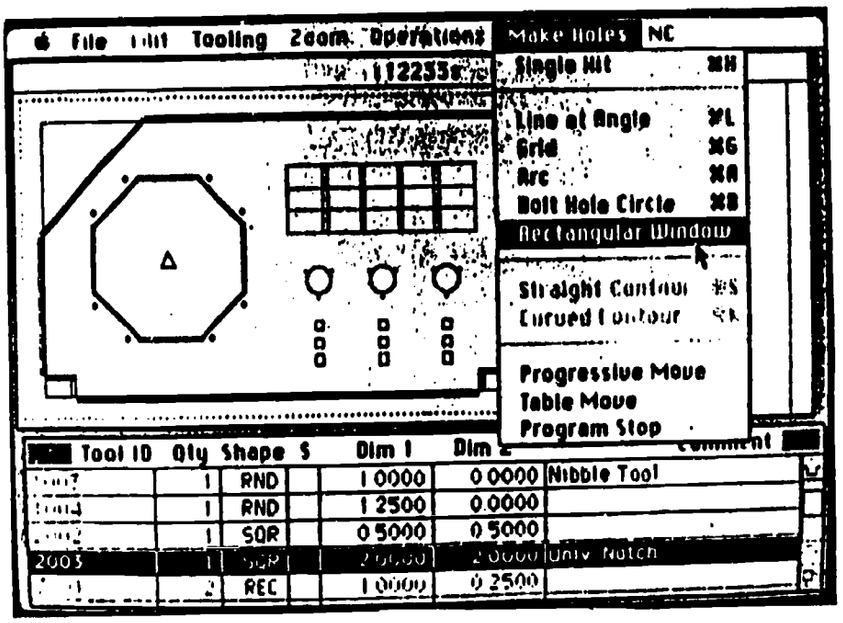

MultiPunch software from Strippit displays prompts from a "make holes" menu to gather information to create a part program for a punch press. An operator selects tools, listed and described in a table at the bottom of the screen, and the software generates a part drawing, updating the drawing after the operator selects each tool hit.

gramming software, Karlinski puts use of English-language commands at the top. The typical learning period for computer programming, he says, has shrunk from a month to one week.

A Cleveland job shop proves Karlinski's point. All-Metal Fabrications, a manufacturer of sheet-metal products like computer chassis, electrical boxes, and cabinets, purchased an Abacus 2000 programming system last August and was producing nc tapes for turret punch presses in two days. Abacus equipment—two crt's, keyboard, printer, and nc-tape punch—sit in production manager Mike Yankovich's office. Yankovich produces nc tapes on the Abacus for a Wiedemann Centrum 2000 turret punch press and for a Strippit/Di-Acro VT-36 turret punch press.

All-Metal sends simple small parts up to 36 inches square to a manually programmed W.A. Whitney Duplicator punch press. Other jobs go to the two computer-programmed presses. Yankovich estimates that on a difficult part produced in multiples, Abacus cuts programming time from four hours to one-half hour.

Creating a program

To begin programming a part, Yankovich gives the program a name, then selects the press to produce the part. He inputs blank size, tells which tools he needs, and gives hole sizes and coordinates of tool-hit points. As he enters each hit, the graphics screen updates a display of the part. The Centrum 2000 turret has 22 stations—All-Metal typically uses five to eight tools for a job.

With a part defined, Yankovich commands Abacus to generate a punching sequence. If he wants multiple parts nested on a sheet, he calls up a tape-prep menu. Using a sheet-utilization subroutine chosen from the menu, he inputs sheet size and informs Abacus how he wants parts separated from the sheet. Typically, a nibbler separates parts along the *x*, *y*, or both axes.

Parts can be separated from the sheet one of two ways: the nibbler can completely cut out parts so they fall out of the sheet onto a conveyor underneath the press, called drop-out; or the nibbler can leave small tabs between parts so the operator only has to shake the sheet to separate parts, called shakeout.

Finally, Yankovich either inputs clamp position manually or has Abacus calculate clamp positions—the Centrum uses two clamps. Abacus calculates a safety zone for each clamp, shown as dashed lines on the sheet layout on the crt screen. There, Yankovich checks positions of tool hits to assure that none fall in the safety zones. If clamp positions are safe, Abacus returns with the number of parts that will fit on the sheet and the percent of material utilization. He can zoom in on any area of the sheet drawing and rotate the drawing, checking for clearance, looking at tabs left for shakeout, or checking other details.

Process optimization

Satisfied with the sheet nest, Yankovich then calls up a routine in the software that calculates the most efficient order of tool use and the order of hits for each tool. He is cautious here with multiple parts requiring shakeout or dropout—if he uses the optimization routine, the program might place the nibbling operation into the sequence before all of the holes are punched, leaving too little sheet to support the parts during punching, or dropping out incomplete parts.

Job shops that purchase cnc machines add a computer programming setup to ease the transition from manual to computer-controlled fabrication.

For multiple parts, Yankovich sets tool order manually, specifying punching of holes from smallest to largest, and assigning nibbling last. He then lets the software figure order of hits for each tool. He lets the computer figure tool order only for large, single pieces. With the process optimized, Abacus displays cycle time to punch the parts.

A printer generates a setup sheet for the press operator that tells him blank size, tool placements, and clamp locations, and the tape punch produces an nc tape. If the press operator, while setting up the machine, notices a required tool already in the turret but in a different

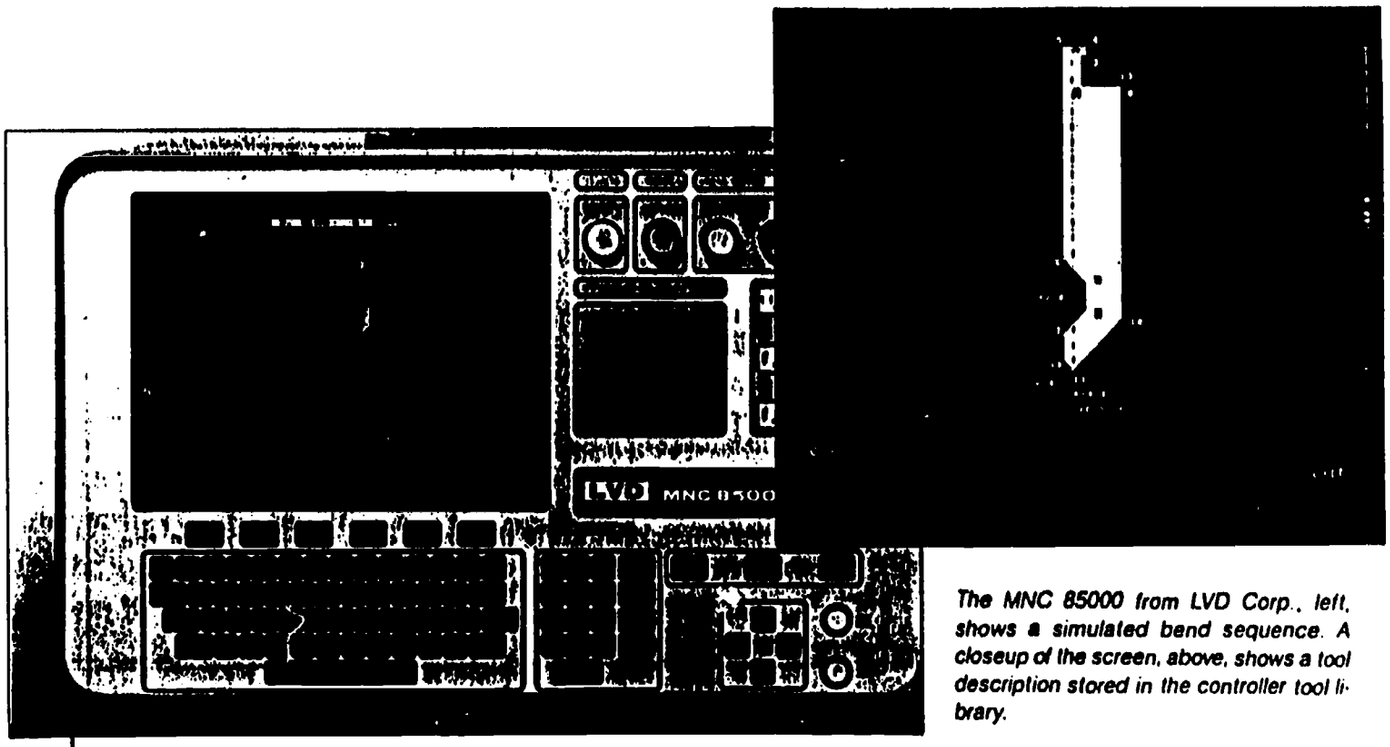

The MNC 85000 from LVD Corp., left, shows a simulated bend sequence. A closeup of the screen, above, shows a tool description stored in the controller tool library.

turret position than called for in the program, he can edit the program on the machine controller so he need not move the tool.

Simulate bending

Computer controllers for press brakes allow the user to simulate bending sequences on a crt screen before running the program on the machine. Users input data describing the material to be formed—tensile strength and thickness—and a description of the bends to be made—flange lengths and angles. The controller calculates blank size, performing all mathematical calculations to account for bend allowances, gives positions of back gages and work supports, and directs part indexing and turning.

Computer controllers for press brakes graphically simulate bending sequences on a crt before running the program on the machine, reducing errors.

Software routines optimize bend sequences to minimize part turning. The controller also watches for out-of-tolerance conditions—the user can input machine capabilities, and, if a bend requires more tonnage than the brake can deliver, the controller displays error statements on a crt screen.

According to Bill Whitbeck, technical engineer at Pullmax, large fabricators and small job shops benefit from advanced press-brake controllers. Pullmax sells Cybelec controllers with its press brakes. He says large fabricators use the controllers to tie brake operations into overall computer operations, like map, cad-cam, and mrp, while small job shops enjoy the quickness and ease at which new part programs are created.

A popular Cybelec controller, also sold by Wysong & Miles for use on its press brakes, is the DNC 7000. This unit includes scheduling software. Operators can input times when jobs should run and how many pieces to bend for each job, then assign machine operators. The controller generates a production schedule, searching a list of jobs and organizing them by similar material type and thickness, operator, and needed tooling to minimize tool changes and save time.

From LVD

. . .comes the MNC 85000 controller. Using the controller, an operator enters geometric data describing a part and inputs press-brake specs—capacity, speed, stroke, bending length, and the like. The controller calculates blank size then generates the optimum bending sequence based on user-defined criteria to minimize handling and simplify gaging. It then shows a graphical simulation of the sequence bend by bend on a 14-inch crt screen. The operator can view any interferences with tooling or the brake and can manually edit the program.

Satisfied with the bend sequence, he instructs the controller to run the program and produce parts. The MNC 85000 sets up all of the brake cnc axes and controls depth settings, ram parallelism, bed crowning, die indexing, tool changes, and positions of back gages and work supports. During brake operation, the controller tracks bending, displaying on the screen what the part should look like after the next bend. It shows the operator how to reposition the workpiece for the next bend and what tooling to use.

To produce brake programs off line, away from the fabricating floor, LVD sells Cadman-B software to run on Hewlett-Packard computers. The software includes the same capabilities as the MNC 85000. It generates programs that can be stored on floppy disks or downloaded to a press brake. Cadman comes with LVD tooling stored in a library; users can add their own tools to the library.

Reprinted with permission from Welding Design and Fabrication, September 1987 issue.

Lasers Find a Niche in Manufacturing

Through their increasingly widespread use, lasers have become an important part of industrial material processing.

JAMES P. RUTT
Coherent General Inc.
Sturbridge, MA

Industrial lasers are becoming the tool of choice in many industries. The reason is economics. High-energy laser beams can cut, weld, drill, heat treat, or mark materials more cost effectively than conventional tools.

Companies where laser-based material processing systems are installed claim improved efficiency in part production by a factor of 8 to 20. Payback periods are said to range from less than one year up to a maximum of five years, depending on the application.

Lasers are easily integrated into automated manufacturing environments. When coupled with CAD/CAM systems, lasers can provide prototype and production parts quickly, while lowering costs.

Cutting costs

Lasers can provide substantial cost savings. One company that performs laser-based metal cutting has determined that laser cutting technology reduced its shop costs by $1.1 million a year. This is accomplished two ways. First, a computer uses interactive graphics techniques to "nest" or lay out parts in a pattern for most effective use of material. The result is a 25 to 30% reduction of metal scrap, for a savings of $450,000 annually.

Second, because the patterns are then cut with the laser beam, there is no need for blanking patterns and dies used in conventional cutting. The elimination of dies yields a yearly savings of $650,000.

Post-processing costs are also reduced. The focused laser beam cuts metals at speeds up to 300 ipm, and produces a cut 0.005 to 0.012 in. wide with a minimum heat-affected zone (HAZ). This minimizes thermal distortion of material, creates sharper definition, and reduces machining costs to deburr cut edges. A CNC interface converts a laser-based material processing system into a multifunctional machine cell capable of single and multiple-spot welding, cutting, and drilling the same workpiece in one program cycle.

Return on investment is further accelerated by diverting the laser beam in a programmed sequence to workstations having different optics and material processing machinery. Instead of using the entire power output from the laser source in one beam, it can be divided into as many as four beams, with each directed on the workpiece at different places to increase throughput. Another variation is to optically split the output beam (either 50-50 or 70-30), directing each to indi-

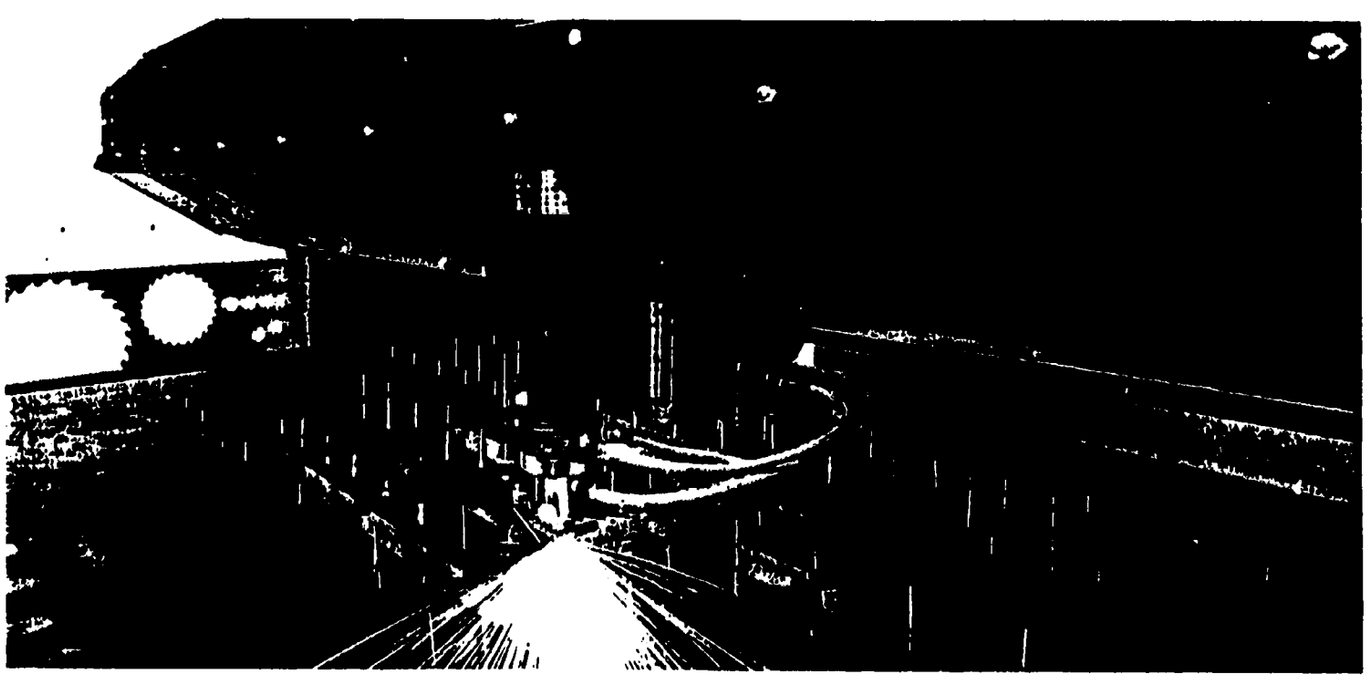

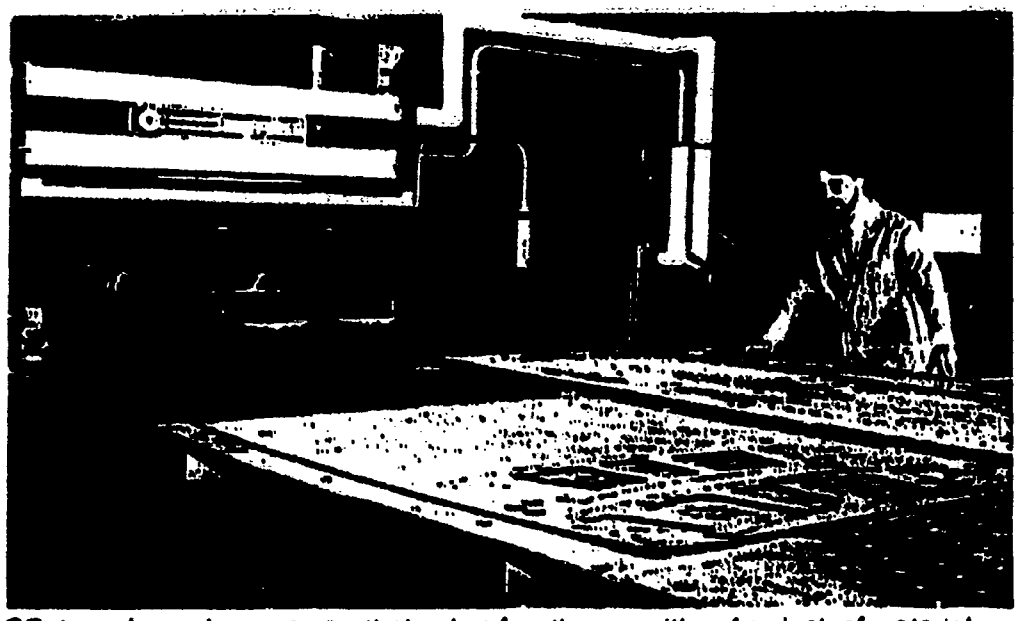

CO_2 laser beam is so narrow that only a few thousandths of an inch of material are removed, allowing accurate complex shapes of high-alloy steel to be cut with sharp definition and virtually dross-free finishes.

Dual-station Everscribe ® ceramic machining center equipped with pulsed CO_2 laser source is usually limited to making 0.015 in. diameter holes, because the ceramic is hard and susceptible to thermal shock. Often, a coaxial gas jet is used to blow away debris and minimize retained heat.

vidual workstations, or pointing them at the workpiece from different directions/angles to cut, weld, or drill a part from both sides.

Choosing a laser

The fact that a laser can process a variety of metal and nonmetal materials does not mean it can be classified as a universal tool. Each application has unique laser processing parameters, in terms of power/energy level, wavelength, beam profile, and beam modulation technique.

Materials react differently to various wavelengths of energy generated by a specific laser source. For example, metals more readily absorb a short wavelength (1.06 μm) energy emitted by a solid-state Nd:YAG (yttrium-aluminum-garnet crystals doped with the rare earth neodymium) and Nd:Glass (neodymium doped glass) lasers. On the other hand, plastics, ceramics, and composite materials, including some metals, absorb long wavelength (10.6 μm) energy from CO_2 sources.

Therefore, lasers must be matched with the materials involved and task to be performed. It is conceivable that two different lasers might work for a particular process, or that one specific type will be capable of performing more than one function.

CO_2 lasers: These lasers dominate the industrial processing field. Most are in the 50 to 1,500 W range, and the major application is metal cutting. Deep penetration welding is also emerging as a viable alternative to electron beam welding (EBW). EBW makes a deeper penetration weld, but that process requires a vacuum chamber, whereas the laser does not. Lasers are also being used for drilling.

The laser can be operated in a continuous wave (CW) or a pulsed (intermittent) output of beam power. The CW output power level is equivalent to the rated total power for a particular model of laser, and the beam is useful for metal cutting, drilling, heat treating, and for many cutting applications where speed, clean vaporization, or a smooth edge is required.

Electronic pulsing produces a leading edge spike of high peak power (typically five to six times greater than the rated CW) that quickly melts and vaporizes the metal during welding or cutting. A single, powerful but short pulse is also useful for drilling because most of the beam energy is used in vaporizing the material and not in heating the area surrounding the spot where the laser beam is focused.

Deeper, more discrete weld penetrations in metals are obtained by beam pulsing. For example, a beam operating in the enhanced pulse mode (with a pulse duration of 4 ms and a repetition rate of 100 pulses/s) can produce a weld rate of 30 ipm for most metals. For example, a 1,250-W laser can achieve 0.1 ipm in stainless steel.

Ceramic drilling has also been improved by taking advantage of the increased peak power and short pulse lengths. One recurring drilling problem has been excessive heating of the substrate during drilling. A burst of short pulses effectively reduces heat input so that high-density hole patterns are produced without thermally fracturing the substrate. Substrates 0.025 in. thick have been laser drilled with 0.007-in.-diameter holes on 0.015 in. centers for a total of 4,900 holes/substrate. Total drilling time per hole is 300 ms. Larger diameter holes are produced by simply moving the beam on the substrate in a circular pattern. The laser, in effect, cuts the ceramic, but because it is pulsed, heat is minimized.

Recent advances in CO_2 technology have improved beam quality characteristics at higher power levels, enabling them to cut, weld, and drill thicker materials faster. A quality cut can now be made in mild or high carbon steel 0.540 in. thick, and the technology is approaching the point where it is economically competitive with plasma cutting.

The balance between power and good beam quality (narrow focus width and highest energy concentration) affects laser performance. The design of contemporary resonators allows lasers to operate in lowest order mode, which can be tailored for a particular application. Different modes are used to obtain varied focus spot sizes.

The transverse electromagnetic

BEAM DELIVERY CONFIGURATIONS CAN INCREASE THROUGHPUT

Some laser/optical techniques can increase throughput from pulsed beam Everpulse® Nd:YAG and Nd:Glass lasers. Dual output and multiple lens array are two methods that can double previous production rates.

Dual output: The laser is assembled with two output windows, which provide two simultaneous and equal outputs, with one-half of the total energy exiting from each end of the laser source.

Assume that a job requires the laser to deliver a 5 ms pulse at 6 J. If a single-output configuration is used, the maximum repetition rate is 60 pulses/min (ppm). If each 6-J pulse processes one part, the throughput would be 60 parts/min.

However, if a dual-output configuration were used operating at an energy output of 12 J (6 J from each output), the maximum repetition rate is also 60 ppm. This would result in a throughput of 120 parts/min.

Multiple lens array: This arrangement splits the laser beam into several individual spots. A typical multiple-lens array is 80% efficient (20% of the laser output is lost), but it is very productive in welding and drilling applications.

For example, assume four round spot welds are to be made on a part, and that the energy required per weld is 1 J at 5 ms. At this energy level, the maximum repetition rate of an Everpulse® Model 11 laser is 40 ppm, which would produce only 10 parts/min.

If a dual-output configuration were used, the maximum throughput would be 20 parts/min. A multiple-lens array (four lenses equals four welds) would require 4.8 J, and at this energy the maximum repetition rate would be 30 ppm, or 26 parts/min.

Productivity can be further increased by combining the dual-output configuration with two multiple-lens arrays. This welding example requires 9.6 J total energy. At this level, the Model 11 can deliver 30 ppm, which results in a throughput of 60 parts/min.

Model numbers 11, 14, and 18, refer to Coherent General equipment.

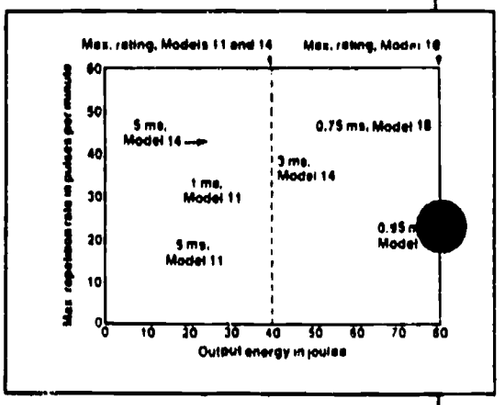

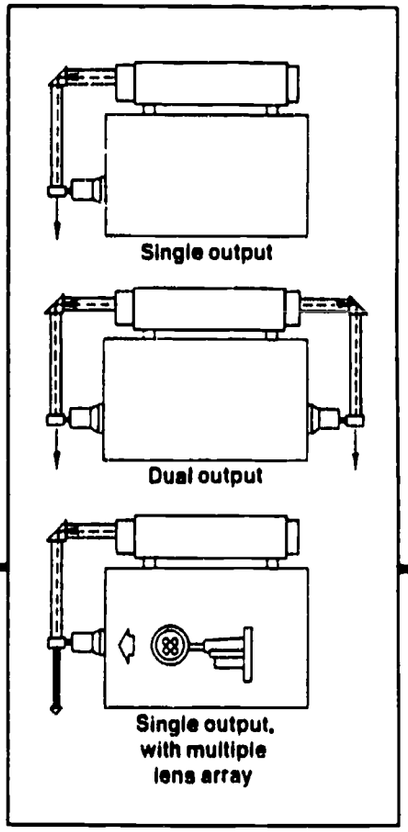

mode is signified by TEM. TEM_{00} provides the sharpest focus and concentrates the maximum power density at the workpiece. It is ideal for most cutting, drilling, and welding applications. A TEM_{01} cross section would show a hollow center, with most of the energy concentrated near the periphery of the focused area. This mode distributes the beam energy efficiently and is used in heat treating and some welding applications. Comparing TEM_{00} to multimode, the difference in focus spot size is only a factor of two, but the power density at the point of contact with the workpiece material reduces geometrically, or by a factor of four.

The significance is that, in many applications, a 250-W TEM_{00} mode laser will perform as efficiently as a 1-kW laser operating multimode.

Solid-state lasers: In the solid-state category, the Nd:YAG is the laser most commonly used in industrial applications. Power ranges from less than 10 to 400 W, and the short wavelength is more readily absorbed by metal than is the CO_2 beam. For that reason, this laser source is often used for low to moderate-power drilling and welding applications in electronic soldering, precision spot welding, and hole drilling. However, the relatively low cutting speed of Nd:YAG lasers limits their use in metal-cutting.

In operation, Nd:Glass lasers do not have the average power levels of YAG and are generally not suited for high production rates. At low operating rates, however, Glass lasers can drill superior quality holes at diameter-to-depth ratios to 1:50.

If spot welding a few contacts per part is required, this thermal tool is suitable. The beam can be divided into three separate finely focused shots or shaped into a rectangle for spot welding or hermetic sealing of components that require localized heating to avoid damage to heat-sensitive parts. They have the additional advantage of about one-third less initial and operating costs than YAG equipment.

Hermetic sealing of steel cans to nickel headers in relays is a natural application for solid-state lasers. The weld must also be crack-free and not affect the glass-to-metal feedthroughs. Here, either the YAG or Glass is used for low-volume.

Because of their short pulse durations (typically 2 to 5 ms) and lower duty cycles, welding with a YAG or Glass laser beam is essentially a "cold" process, with no linear heat buildup in the materials being processed. This allows the welding of heat-treated and magnetic materials without affecting them metallurgically beyond a very narrow HAZ, which literally confines material alteration to the weld.

Cost-effective, laser-drilled holes range in diameter from 0.0005 to 0.06 in. The difficulty in making a smaller diameter opening is due to the inability to maintain adequate depth of focus at this spot size. Holes larger than 0.06 in. diameter may be drilled by trepanning, but this method is slower. Glass lasers have successfully drilled through nickel-cobalt alloys as thick as 1.0 in. at hole diameters of 0.02 in. representing diameter-to-depth ratio as high as 1:50. YAG lasers pen-

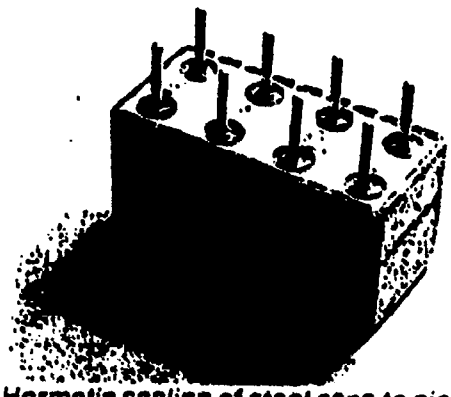

Hermetic sealing of steel cans to nickel headers in relays is done with solid-state lasers. Because the lasers use very short pulses of energy (typically 3 to 5 ms), hermetic seals are made in close proximity to glass-to-metal seals, and on a wide variety of packages containing heat-sensitive elements.

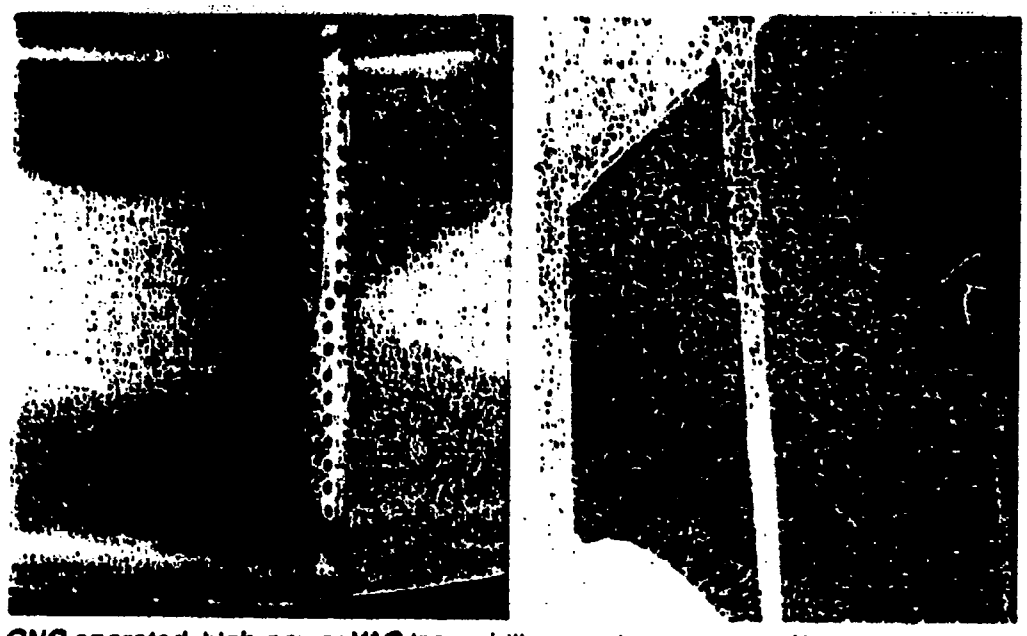

CNC operated, high-power YAG laser drills complex patterns of holes of varying diameter in nickel-cobalt turbine blades for jet engines. Cross-section shows the hole is free from recast or cracking.

etrate 0.75 in. or more with hole aspect ratios in the 1:30 range.

Typical durations of laser drilling pulses are 0.4 to 1 ms. Generally, shorter pulse durations (0.4 to 0.6 ms) produce better quality holes, that is, less distortion and taper, but more pulses are required to drill through the material. Longer pulse durations — to 1 ms — remove more material per pulse, but they create more deformation at the top of the hole.

A recently introduced high-power YAG laser is helping aircraft engine builders reduce the cost of drilling an array of deep cooling holes in vanes and blades made of nickel-cobalt alloy. The laser has a resonator that is adjustable to provide maximum average power of either 250 W in precision drilling configuration or 400 W as a high throughput cutter/driller. The drilled holes vary in diameter from 0.01 to 0.03 in., up to 0.8 in. in depth, and with entrance angles as low as 6° from the surface. All parameters are set through CNC.

Nonlaser processes, including electro-discharged machining (EDM), electrochemical machining (ECM), and electrostatic (ES) drilling, produced clean, straight, accurate holes with minimal recast, no delamination, and no cracking into the parent material, but the cost of production by these slower methods was prohibitive. Investigation showed that laser drilling could produce satisfactory holes quickly and economically.

Economic analysis revealed dramatic benefits with laser drilling. Cost savings ranged from a factor of two for low diameter-to-depth aspect ratio holes to seven on more difficult aspect ratios such as 1:50.

YAG-based automated laser marking systems are becoming the tool of choice to engrave bar codes and optical character recognition (OCR) fonts on such materials as hardened metals, ceramic, carbide, silicon, and most plastics. Laser marking has many advantages over traditional methods. Most important, the mark is permanent and withstands extreme temperatures and hostile environments. It can be used on either flat, curved, or grooved surfaces, and the beam can be optically directed into difficult to reach places. The noncontact nature of the process is a clear advantage in coding small, fragile electronic components, as are high speeds which can range from 2 to 20 times faster than conventional ink-based methods.

Laser marking has some advantage over traditional methods of bar coding because YAG lasers offer great flexibility. Variations include size of the mark, amount of information to be imprinted, and factors relating to the mark itself, such as depth and tracking the geometry of the part.

Laser literacy

Laser processing is now economically competitive with traditional mechanical and thermal methods. Industrial lasers have proved to be reliable, and the mechanical/electronic technology exists to put these nonwearing, high-energy beams to work on the factory floor.

A number of system suppliers offer laser processing centers with multiaxis motion, high-performance optics, on-line viewing and inspection, automated parts handling, and complete computer control interface. Positioning the workpiece with respect to the focusing optics is accomplished by moving the part, the optics, or a combination of both.

Laser system integrators also offer a range of part-processing choices. For small workpieces in one system, for example, the part is positioned in all five axes (three translation plus two rotation) while keeping the optics stationary to minimize the number of optical surfaces for improved reliability. In other systems, the workpiece may be too bulky for multiaxis positioning, and some axes of motion may be performed with the optics.

Robots will also help integrate lasers into the manufacturing process. Advancements in laser technology, beam-delivery systems, and robot positioning accuracy will play a major role in making the laser a mainstay in factory automation and flexible manufacturing. ■

CUTTING AND NOTCHING SHEET METAL

COMPETENCY:

Cut and notch sheet metal.

OBJECTIVES:

1. List safety precautions for using snips, the squaring shears, and the plasma cutter.
2. Explain the cutting procedure for straight cutting snips.
3. Explain how to cut an outside circle with combination snips.
4. Explain how to cut an inside circle with aviation snips.
5. Define the following: square notch, straight notch, slant notch and a full "V" notch.
6. Explain how to avoid wasting metal when cutting out patterns.
7. Identify the main parts of a squaring shear.
8. Recommend the appropriate cutting operation for various situations.
9. List the pros and cons of various cutting operations.
10. Explain when and how to use the plasma cutter.
11. Demonstrate the safe use of all types of snips and the squaring shear.

LEARNING ACTIVITIES:

1. READ pages 17-22 in the Short Course in Sheet Metal Shop Theory by Richard Budzik.

2. READ the Cutting Sheet Metal information sheet.

3. COMPLETE the questions at the end of each chapter in the text. Questions 1-8 on page 19 and questions 1-10 on page 22. COMPARE your answers with a classmate. Recheck any incorrect answers.

4. PARTICIPATE in class lecture/discussion on cutting sheet metal.

5. WATCH your instructor demonstrate cutting a straight line, an outside circle, and an inside circle.

6. WATCH your instructor demonstrate the squaring shears.

7. PRACTICE using the Squaring Shears.

APPLICATIONS:

1. Use hand snips to make the following cuts on sheet metal:
   - straight cuts
   - outside curved cuts
   - internal cuts
2. Use a foot operated squaring shear to cut metal.

EVALUATION/CHECK OUT:

1. Use hand snips to make the following cuts to given standards on sheet metal:
   - straight cuts
   - outside curved cuts
   - internal cuts
2. Use hand snips to notch a piece of sheet metal to given standards.
3. Using a foot-operated Squaring Shear, cut three pieces of metal to the dimensions specified by your instructor.

INFORMATION SHEET

CUTTING SHEET METAL

Sheet metal can be cut by hand or by machine.

SNIPS

Hand cutting is performed with snips. The most commonly used types of snips are the bulldog, combination, and the left-hand and right-hand aviation snips.

Like any skill, the operation of snips depends upon practice. However, much of the mastery of snips also depends upon knowledge. Remember the following rules when using snips:

1. Keep the small piece of metal over the bottom blade of the snips.

2. Trim off excess metal before making the cut line.

3. Whenever possible, rest the blade and handle of the snips on the workbench. This rule does not apply to aviation snips, since they are too small to use in this manner.

4. When notching, keep the end of the snips blades at the point where the notch will end.

5. Keep oil from the blades of snips. A drop of oil should occasionally be put on the swivel bolt of snips to keep them moving freely. However, do not allow it to run onto the blades, since this will cause the metal to slip out of the blades.

6. Cut only sheet metal with snips. If you use them to cut wire, you are almost sure to nick the blades.

7. Don't force snips.

SQUARING SHEAR

Cutting metal by machine is quicker or more accurate than the hand method.

There are several types of machine shears, but the squaring shear is used most frequently. It is used for trimming or making straight cuts on sheet metal and for cutting sheets so that the sides are square. The cutting and trimming can be done on marked sheets or by using the gages. Squaring shears are equipped with devices called gages which are used as

stops for the sheets when many pieces of the same size are required.

Squaring shears cut various kinds of sheet metal such as tin plate, galvanized iron, black iron, zinc, copper, aluminum, and stainless steel.

One sheet should be cut at a time on the squaring shear. under no circumstances should wire, rod, bar stock, seamed edges, or grooved or welded metal be cut on the squaring shear. They should never be used to cut materials exceeding the capacity of the machine, even if the pieces are small. The bed of the shear should be cleaned before any cutting is done.

The squaring shear should be lubricated periodically depending on its use. As with all machines, it is safe only if operated properly. The following safety precautions must always be followed:

1. Never place your fingers under the blade or hold-down bar.

2. When operating the treadle, use only one foot and keep the other well back to keep from crushing your toes.

3. Be sure the gage of the metal is within the rated capacity of the machine.

4. Cut only one thickness of metal at a time.

5. The shear should be locked when not in use.

ORMATION SHEET

THE SQUARING SHEAR

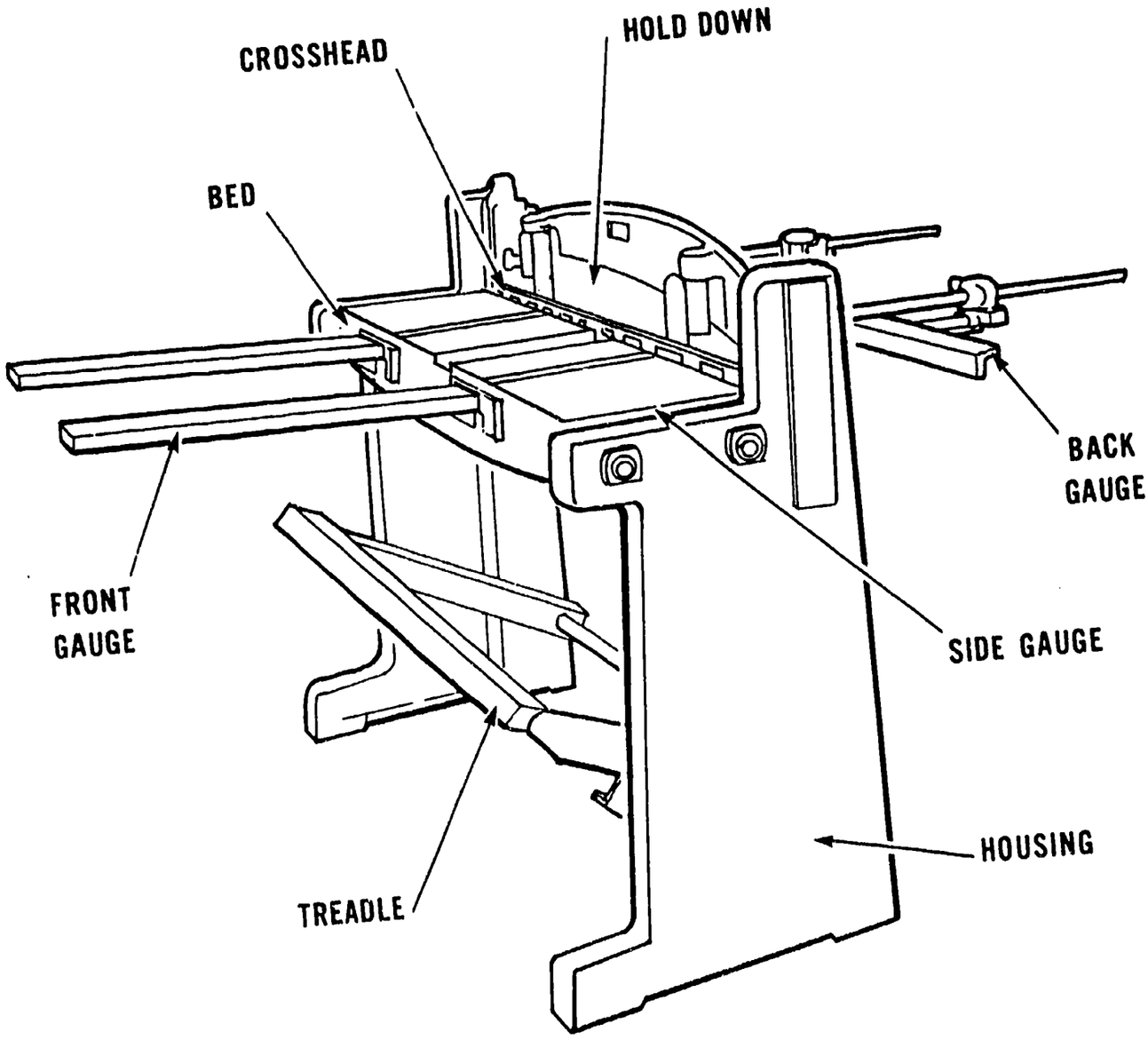

614

PUNCHING AND DRILLING SHEET METAL

COMPETENCY:

Punch and drill holes in sheet metal.

OBJECTIVES:

1. Explain when to punch vs. drill sheet metal to form holes.
2. Determine the size of holes needed.
3. Use the hand punch and hand lever punch.
4. Use the turret punch.
5. Identify proper backing materials when using the punch.
6. List advantages and disadvantages of using various types of punches.
7. Use a hand drill.
8. Use a drill press.
9. List safety precautions when using drills and punches.
10. Demonstrate the safe use of all types of drills and punches.

LEARNING ACTIVITIES:

1. READ pages 33-36 in the Short Course in Metal Shop Theory by Richard Budzik.

2. COMPLETE the questions at the end of each chapter in the text. Questions 1-16 on page 34 and questions 1-7 on page 36.

3. PARTICIPATE in various labs created by your instructor.

4. READ and STUDY the information sheet on Punching and Drilling Sheet Metal.

5. READ and STUDY the information sheet on Safety Precautions when Drilling and Punching.

6. STUDY the information sheets on the Types of Punches and Drill Presses and Their Uses.

7. OBSERVE a demonstration from your instructor on the drill press parts and its use.

8. STUDY the information sheet on Cutting Speeds and Cutting Fluids.

9. READ the information sheet on Twist Drills and Holding Devices.

10. WATCH your instructor demonstrate the proper use of twist drills and various holding devices.

11. STUDY the three handouts on twist drills:
    Parts of a Twist Drill
    Speeds for Fraction-Size Drills
    Suggested Drill Speeds

12. COMPLETE the Parts and Controls Assignment Sheet.

13. COMPLETE the Selecting and Setting Cutting Speed and Feed Rate Assignment Sheet.

14. COMPLETE the Twist Drill Size Assignment Sheet.

15. PARTICIPATE in class lectures and discussions on punches and drills.

16. Optional: VIEW videotapes as assigned by instructor.

EVALUATION/CHECK OUT:

1. Submit your Parts and Controls Assignment Sheet.
2. Submit your Selecting and Setting Cutting Speed and Feed Rate Assignment Sheet.
3. Submit your Drill Sizes Assignment Sheet.
4. Demonstrate your knowledge of the objectives in a test situation.

INFORMATION SHEET

PUNCHING AND DRILLING SHEET METAL

In making sheet metal projects, various holes are usually required for rivets, bolts, sheet metal screws, or merely as a portion of the project design. The holes can either be **punched** or **drilled**, depending of the following factors:

1. The diameter of the hole.

2. The thickness of the sheet metal.

3. The distance from the center of the hole to the edge of the pattern.

4. Convenience and availability of tools and equipment.

5. The shape of the hole.

6. The size of the sheet metal pattern.

In punching a hole in sheet metal, a punch forces the metal through the die, leaving a clean hole. The drilling operation produces a circular hole in a piece of metal by gradually removing tiny metal chips until the required hole size is obtained. Punching a hole in sheet metal differs from drilling a hole in sheet metal in the following ways:

1. The punched-out metal remains in a single piece. The drilled-out metal is in many tiny pieces or "chips."

2. The punching process punches the entire hole in a single motion. In the drilling process, the hole is smaller at first, gradually increasing in size, until it is the required size.

3. Punching can be done with hand tools, hand-operated machines, and electric powered machines. Drilling can be done with hand tools, and electric powered machines.

4. Special punches can be purchased to punch holes of nearly any shape. Drills can be used only for round holes.

INFORMATION SHEET

SAFETY PRECAUTIONS WHEN DRILLING OR PUNCHING

1. Keep your hands away from moving parts.

2. Protect your eyes form flying chips.

3. Do not handle metal chips with your hands. Use a brush to clean chips from the drill.

4. Do not wear loose clothes, and keep long hair tied back while operating the drill press.

5. Make sure that machines are in good working order.

6. Keep drills and punches sharp and clean.

7. Clamp your work solidly. Do not hold work with hands.

8. NEVER attempt to stop machines with your hands.

9. Stop machine when measuring or making adjustments.

10. Place a piece of wood over the table when removing drill bits from the drill press to prevent the bits from falling through the holes in the table.

11. Treat cuts and scratches immediately.

12. ALWAYS remove chuck key from the chuck before turning on the power.

13. Wipe spilled cutting oil from machine and floor.

14. Do not misuse the drill press.

15. Report any damage to the instructor or person in charge.

16. If the metal slips, stop the machine before touching it or making any adjustments.

17. Always operate the machine at the appropriate speed- higher speeds for smaller twist drills and slower speeds for larger twist drills.

18. If the twist drill sticks into the metal, turn off the power before tightening the chuck.

19. Never reach around or near a moving drill.

20. Never lower your head when the machine is operating.

INFORMATION SHEET

TYPES OF PUNCHES AND THEIR USES

SOLID PUNCH

The solid punch is sometimes used to make holes for rivets and for starter holes for sheet metal screws. Proper backing is essential when using the solid punch to prevent excessive distortion of the metal around the hole. The materials used for backing are either a lead cake or a block of wood. When using a wood block, always place the metal on the end grain of the wood. This way, the wood absorbs most of the pressure, minimizing distortion of the metal.

TURRET PUNCH

These punches are of different capacities and sizes. The size most used is for holes from 1/8 inch up to 2 inches in diameter. These punches are designed so the upper punch and the lower die are mounted on two revolving tables or turrets. The turrets can be released and turned instantly to allow for immediate setting for the hole desired. These punches have a deep reach and have an immediate setting. It is important to always have the same size punch and die aligned to avoid broken punches.

HAND LEVER PUNCH

The hand lever punch is used for punching small round holes in sheet metal, upward to 18-gauge. Its use is restricted, since the maximime distance of the hole from the edge of the sheet metal pattern can be only 1 3/4 inch. The hand lever punch set is provided with seven punches and dies for punching round holes.

The general operations of all hand lever punches are the same but the methods of changing punches and dies are different. In general, the punches and dies are changed in the following steps:

1. Remove the die with a screw driver or key provided for the purpose.
2. Open the punch.
3. Remove the threaded collar.
4. Remove punch from collar.
5. Replace the correct size punch in collar.
6. Replace the threaded collar.

7. Return the levers to normal position.
8. Replace the correct size die.
9. Adjust the die with a screw driver until the punch just barely punches a clean hole.

The centers needing to be punched are marked with a prick punch. In punching a hole, the centering point of the punch is placed in the prick point of the work. The hole is then completed by pressing down the upper lever.

FLOOR AND BENCH LEVER PUNCHES

These punches are basically the same machine; but the bench model is purchased without the special stand and is attached to a workbench top. This type of machine is extremely strong and sturdy; it is used for punching the heavier gauges of sheet metal and for the larger holes.

INFORMATION SHEET

TYPES OF DRILLS PRESSES AND THEIR USES

The drill press is used for various drilling operations, the most common of which is drilling holes. There are many types of drill presses but they all work on the same principle, that is, rotating a twist drill by power. All drill presses must have some means of holding the work on the table and of adjusting the speed of the spindle for the different sizes of drills and kinds of materials.

BENCH MODEL	Operated by rotating a cutting tool against the material with enough pressure to cut and penetrate the material. It is usually mounted on a bench and is smaller than floor-type drill press. Used for small jobs.
FLOOR MODEL	Operates in the same principle as the bench-type drill press. Used for larger jobs due to larger working area of table movement.
GANG DRILL	A drilling machine with several drilling spindles fastened in line to a single long table. It is used in mass production in doing a series of operations, one after the other. One operation may often require several different drill sizes.
UPRIGHT DRILL	Similar to floor-type drill press used in making heavy-duty drilling. It usually has a gear-driven mechanism for different spindle speeds and an automatic or power feed device. It will receive larger drills and cutters than the standard bench and floor-type drill presses.
RADIAL DRILLING MACHINE	Handles large workpieces that cannot be moved easily. It has a large arm extending out from the column which can be raised or lowered, and which also swings in a complete circle around the column. The drilling head moves back and forth on this arm.
MULPIPLE-SPINDLE DRILL HEAD MACHINE	This machine may have from four to 48 or more spindles which are driven by one gear drive in the head. These are mass-production drilling machines. Some have several drill heads, with many spindles

	making it possible to drill as many as 100 holes at one time.

PARTS OF THE DRILL PRESS

BASE	Supports the machine.
TABLE	Supports the workpiece.
COLUMN	Supports the table.
TABLE CLAMP LEVER	Locks the table to the column.
CHUCK	Holds or clamps the drill in place.
SPINDLE LOCK CLAMP	Locks the spindle in place.
DEPTH GAUGE	Measures the depth of holes.
SWITCH	Turns the power on or off.
SPEED ADJUSTMENT HANDWHEEL	Control with dial which adjusts cutting speed.
POWER ASSEMBLY	The system of electric motor, pulleys, and belts to provide and transmit power needed to operate machine and cutting action.

OPERATIONS PERFORMED ON THE DRILL PRESS

DRILLING	To produce a hole in metal with a drill bit.
COUNTERSINKING	To shape a drilled hole in material with a cone-shaped tool to provide a recess for a flat head screw or bolt.
COUNTERBORING	To drill a second larger hole a specified depth, using the same center as the original hole.
TAPPING	Is done with hand tap and wrench to cut internal threads in holes.
SPOT-FACING	Making circular spots on uneven surfaces to produce a finished flat surface for a head of a bolt or nut.
BORING	To make a hole larger, using a single-

	pointed cutting tool.
SPOT FINISHING	A means of polishing and finishing surfaces with numerous circular turns, using a wood dowel and grinding compound.
REAMING	Used to finish a drilled hole to an accurate size.

INFORMATION SHEET

CUTTING SPEEDS AND CUTTING FLUIDS

The **speed** of the drill is usually measured in terms of the rate at which the outside of the tool moves in relation to the work being drilled. The cutting speed that the drill rotates is shown in FEET PER MINUTE (FPM). The REVOLUTIONS PER MINUTE (RPM) of the spindle must be adjusted by means of the stepped pulleys for the size of drill used. The range of the spindle RPM is usually marked on the head of the drill press. On every job there is the problem of choosing a speed which will permit the highest rate of production without entailing excessive drill costs or down-time for tool sharpening. The most efficient speed for operating a drill will depend on many variables, some of which are:

1. Composition and hardness of material.
2. Depth of hole.
3. Efficiency of cutting fluid.
4. Type and condition of drilling machine.
5. Quality of holes desired.
6. Difficulty of set-up.

On most jobs, it is usually better to start with a slower speed and build up to the maximum after trials indicate the job can be run faster.

Feed means the speed at which a drill is fed into the work with each revolution. Feed rates for drilling are governed by the size of the drill, machineability of the material being drilled and depth of the drilled hole. Small drills, harder materials and hole depths in excess of 3 to 4 drill diameters require additional consideration in selecting appropriate feeds. Since the feed partially determines the rate of production and also is a factor in tool life, it should be chosen carefully for each particular job.

A SPEED AND FEED TABLE is used for the following applications:

1. Provides speed and feed recommendations for various materials.
2. Lists speeds for each drill size under RPM column.
3. Shows feeds for each type of metal.
4. Gives clues to use in checking correct manual feed on drill presses:
   a. Uniform chips-indicate drill is fed correctly.
   b. Chatter or scraping noise-indicate drill is dull, or is too slow.
   c. Chipped cutting edges, broken drills, and drill heating, even with coolant-show feed is too fast.

In figuring speeds use the following simple formula:

$$RPM = \frac{4 \times CS}{D} \text{ (Cutting Speed)}$$

EXAMPLE: Obtain recommended cutting speed for drilling aluminum with 250 FPM cutting speed.

1. Convert drill diameter--1/4 inch--to decimal--.250
2. Place figures in formula:

$$RPM = \frac{4 \times CS}{D}$$

$$RPM = \frac{4 \times 250}{.250}$$

3. Calculate:

$$RPM = \frac{4 \times 250}{.250} = \frac{1000}{.250} = 4000 \text{ RPM}$$

Lubricants or cutting fluids are needed when drilling. They are used to cool a drill during drilling so it will not lose its hardness and become dull. A rise in temperature of the drill could also result in burning the drill. The lubricant also reduces friction at the cutting edge and reduces the tendency of chips to become welded to the lip. Lastly, lubricants improve the finish of the work.

The kind of lubricants used vary with the kind and hardness of the metal being drilled. The following list is frequently used cutting fluids:

1. Cutting oil: Petroleum mineral oil base.
2. Emulsifiable oil: Mineral oil and water base.
   a. is mixed with water.
   b. has better coolant properties than cutting oils.
   c. contains rust inhibitors.
3. Kerosene: Used in cutting aluminum and its alloys.
4. Compressed air: Used when machining cast iron.
5. Cutting wax: Developed for use as cutting compounds to be used with other cutting fluids.

INFORMATION SHEET

TWIST DRILLS AND HOLDING DEVICES

When drilling by hand, the electric hand drill is used. Twist drills are used as the cutting tool when drilling holes. The size of the drill is marked of the shank of the drill. The different parts of the drill are:

POINT — Cone-shaped end that does the cutting Consists of:

- a. Dead center: Sharp edge at the tip of the drill.
- b. Lips: Cutting edges of drill.
- c. Heel: Portion of the point opposite the cutting edge.

SHANK — End of drill bit that is attached to the drill press.

- a. Straight: Used with a chuck.
- b. Tapered: Have self-holding tapers.
  - 1. Morse taper: No. 1 to No.5 taper that fit directly into drill spindle.
  - 2. Tang: Is on tapered shank which fits into the spindle slot.
  - 3. Tapered sleeve: A device to adapt different sizes of drill shanks.

BODY — Portion between point and the shank. Consists of:

- a. Flutes: Spiral grooves running the length of drill body.
  - 1. Help form cutting edge.
  - 2. Curl chips tightly for easy removal.
  - 3. Forms channels for chip removal.
  - 4. Allow coolants and lubricants to flow to cutting edge.
- b. Margin: Narrow strip extending back length of drill to form the full diameter of the drill bit.
- c. Body clearance: The reduced part that cuts down friction between wall of hole and drill.
- d. Web: Metal column that separates the flutes, increases thickness towards the shank to give strength.

There are two types of drills. The carbon steel drill is used for soft materials and the high speed steel drill is used for hard materials.

Drill size charts show drill diameters and are available in letters, fractions, and metric sizes.

Numbers (0.135 to 0.2280 inches diameter)	#80 to #1
Letters (.234 to 0.413 inches diameter)	A to Z
Fractions	1/64 to 63/64 inches diameter
Metric (0.1181 to 2.9921 inches diameter)	3mm to 76mm

Twist drill gauges are used to check the sizes of drill bits. Gauges are available in numbers, letters, fractions and metric sizes.

Work holding devices are used to clamp work solidly while operation is performed and to prevent injury to drills and machines and the person using the drill. Holding devices include:

VICES	Safest of workholding devices when bolted to table. a. Should have wood or flat stock placed under work to prevent damage to vise. b. Require the use of parallels to raise work in the vise jaws.
V-BLOCKS	Used to support round work when drilling. a. Made in various shapes. b. Some have clamps to assist in holding.
T-SLOT BOLTS	Fit into table slots. a. Used with washer and nut. b. Come in various lengths.
STRAP-CLAMPS	Used for clamping unevenly shaped parts. a. Comes in various lengths. b. Used with T-bolts.
STEP BLOCKS	Support strap clamps opposite the work at any level.
ANGLE PLATE	Used where work needs to be clamped to a vertical support.

DRILL JIGS	Used when holes are to drilled in a number of identical pieces.
C-CLAMPS	Used for clamping flat stock.

INFORMATION SHEET

PARTS OF A TWIST DRILL

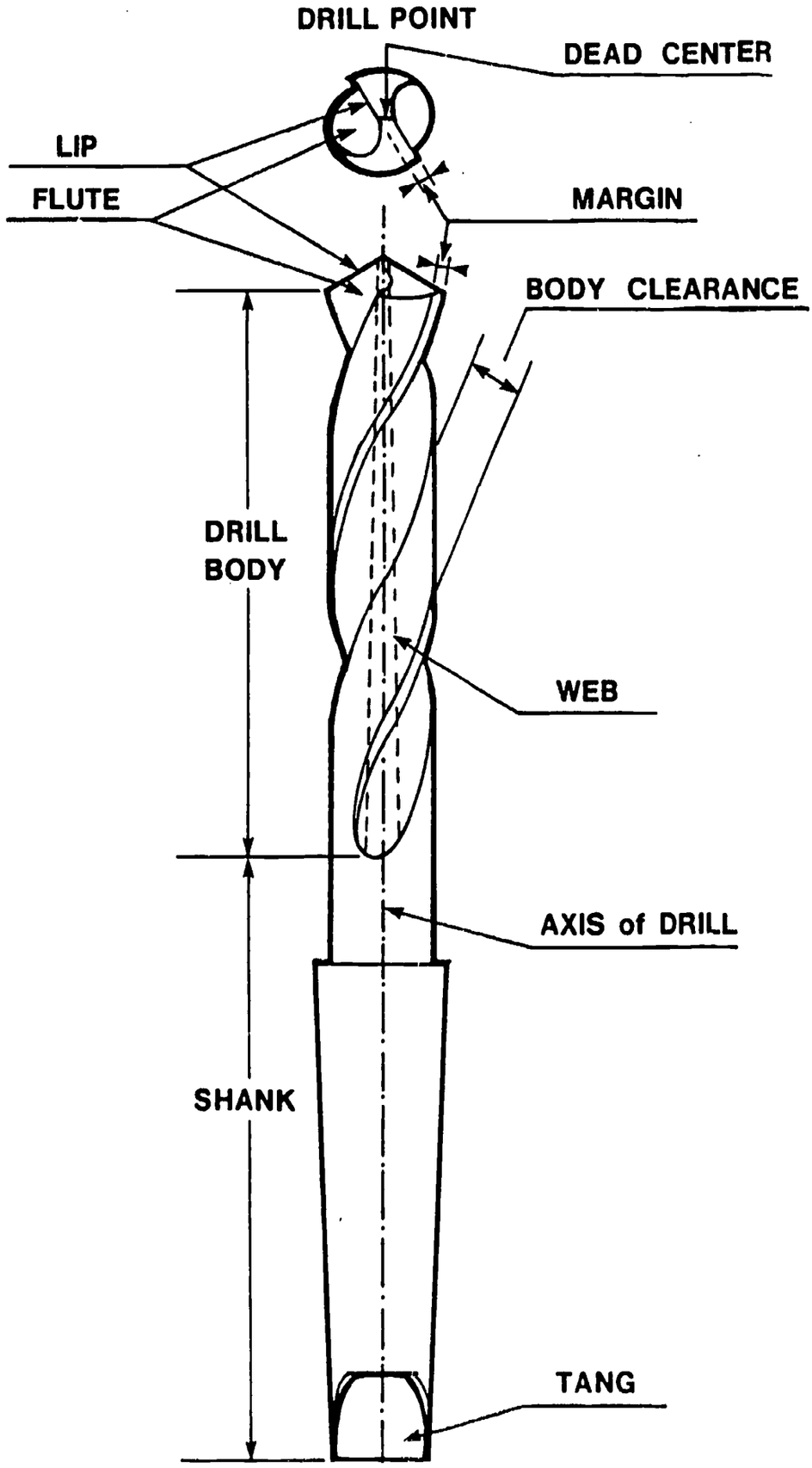

INFORMATION SHEET

SPEEDS FOR FRACTION-SIZE DRILL

Feet per Min.	30	40	50	60	70	80	90	100	110	120	130	140	150
Diam. (Inches)	Revolutions per Minute												
1/16	1833	2445	3056	3667	4278	4889	5500	6111	6722	7334	7945	8556	9167
1/8	917	1222	1528	1833	2139	2445	2750	3056	3361	3667	3973	4278	4584
3/16	611	815	1019	1222	1426	1630	1833	2037	2241	2445	2648	2852	3056
1/4	458	611	764	917	1070	1222	1375	1528	1681	1833	1986	2139	2292
5/16	367	489	611	733	856	978	1100	1222	1345	1467	1589	1711	1833
3/8	306	407	509	611	713	815	917	1019	1120	1222	1324	1426	1528
7/16	262	349	437	524	611	698	786	873	960	1048	1135	1222	1310
1/2	229	306	382	458	535	611	688	764	840	917	993	1070	1146
5/8	183	244	306	367	428	489	550	611	672	733	794	856	917
3/4	153	203	255	306	357	407	458	509	560	611	662	713	764
7/8	131	175	218	262	306	349	393	436	480	524	568	611	655
1	115	153	191	229	267	306	344	382	420	458	497	535	573
1 1/8	102	136	170	204	238	272	306	340	373	407	441	475	509
1 1/4	92	122	153	183	214	244	275	306	336	367	397	428	458
1 3/8	83	111	139	167	194	222	250	278	306	333	361	389	417
1 1/2	76	102	127	153	178	204	229	255	280	306	331	357	382
1 5/8	70	94	117	141	165	188	212	235	259	282	306	329	353
1 3/4	65	87	109	131	153	175	196	218	240	262	284	306	327
1 7/8	61	81	102	122	143	163	183	204	224	244	265	285	306
2	57	76	95	115	134	153	172	191	210	229	248	267	287
2 1/4	51	68	85	102	119	136	153	170	187	204	221	238	255
2 1/2	46	61	76	92	107	122	137	153	168	183	199	214	229
2 3/4	42	56	69	83	97	111	125	139	153	167	181	194	208
3	38	51	64	76	89	102	115	127	140	153	166	178	191

INFORMATION SHEET

SUGGESTED DRILL SPEEDS

Material to be Drilled	Cutting Speed (Surface Feet per minute)
Aluminum and its alloys	200-300
Bakelite	100-150
Brass and bronze, soft	200-300
Carbon, pure(carbide drills)	70-150
Cast iron, soft	100
Cast iron, hard	100-150
Magnesium and its alloys	250-400
Malleable iron	80-90
Nickel and monel	40-60
Steel, machinery	80-100
Steel, annealed	70-80
Steel, tool	50-60
Steel, forged	50-60
Steel, alloy (300 to 400 Brinnel)	20-30
Steel, stainless, free machining	30-40
Steel, stainless, hard	30-40
Steel, manganese	15

Source: American Machinist. Speeds shown above are for high-speed steel drills. Carbon steel drills should be run at from 40 to 50 per cent of those for high-speed steel drills. These are recommended speeds; the best speed in each case must be based on the specific conditions, material, set-up, etc.

ASSIGNMENT SHEET

PARTS AND CONTROLS

After observing your instructor demonstrate the use of the drill press, perform the following functions on the drill press. Have a fellow student check off the functions after you have properly accomplished them.

1. Turn on the machine	
2. Lower and raise spindle	
3. Adjust spindle RPM	
4. Adjust depth stop	
5. Lock spindle clamp	
6. Adjust table height	
7. Lock table	
8. Stop machine	

ASSIGNMENT SHEET

SELECTING AND SETTING CUTTING SPEED AND FEED RATE

1. What is the formula to find RPM if given cutting speed and the diameter of the drill?

2. What is the cutting speed for aluminum?

3. Find the RPM for a 1/2 inch drill when drilling brass.

4. Find the RPM for a 1/4 inch drill when drilling cast iron.

5. Find the RPM for a 1 inch drill when drilling mild steel.

6. List the feed rate for drilling aluminum with a 3/16 inch drill.

7. List the feed rate for drilling cast iron with a 7/8 inch drill.

8. List the feed rate for drilling common bronze with a 3/8 inch drill.

9. List the feed rate for drilling spring steel with a 3/32 inch drill.

ASSIGNMENT SHEET

TWIST DRILL SIZES

Measure the twist drills provided by your instructor with both the micrometer and the drill size gauges. List your readings in the proper columns.

DRILL SAMPLE	MICROMETER READING	DRILL GAUGE SIZE
1.	_____	_____
2.	_____	_____
3.	_____	_____
4.	_____	_____
5.	_____	_____
6.	_____	_____
7.	_____	_____
8.	_____	_____
9.	_____	_____
10.	_____	_____

BENDING AND SHAPING SHEET METAL

COMPETENCY:

Bend and shape sheet metal.

OBJECTIVES:

1. List safety precautions for use with bending and shaping machines.
2. Use the bar folder, making all normal adjustments.
3. Use the hand brake and the box and pan brake, making all normal adjustments.
4. Identify the major parts of a bending brake.
5. Tell how to adjust the brake for handle tension and set back.
6. Discuss the appropriate sequencing of bends.
7. Summarize the limitations of a press brake.
8. Set up the press brake.

LEARNING ACTIVITIES:

1. READ pages 23 - 29 in a Short Course in Sheet Metal Shop Theory by Richard Budzik.

2. READ the Bending Sheet Metal information sheet.

3. COMPLETE the questions at the end each chapter in the text. (Section 8 questions on page 24, section 9 questions on page 26, and section 10 questions on page 29.) CHECK the answers to the questions with another student or your instructor. REVIEW any questions you missed.

4. WATCH your instructor demonstrate the bar folder, hand brake and box and pan brake. PARTICIPATE in a class discussion about them.

5. COMPLETE the Fabrication Lab assigned by your instructor.

APPLICATIONS:

1. Set up the press brake.
2. Use the bar folder, making all necessary adjustments.
3. Use the hand brake.
4. Use the box and pan brake.

EVALUATION/CHECK OUT:

1. Submit your fabrication lab(s) for grading.
2. Submit your Applications checklist.
3. Demonstrate your knowledge of objectives in a test situation.

INFORMATION SHEET

BENDING SHEET METAL

BAR FOLDER	The bar folder is a machine for folding or bending sheet metal edges such as are used for seams and hems. Folds are limited to a width of 1" or 1-1/4", depending on the size of the bar folder. This machine is adapted for bending edges of 22 gage metal or lighter.
BRAKE	A brake is a machine for bending and folding sheet metal. Unlike the bar folder, the brake can bend or fold the metal any distance from the edge. Moldings can be made on the brake by using a mold.
HAND BRAKE	The standard hand brake is used for bending sheet metal to various shapes, such as right-angle bends, other-angle bends, radius bends, hemmed edges, and the various seams. Many sheet metal projects require a combination of the various bends. The most important point to keep in mind is to follow the correct operations sequence.
BOX AND PAN BRAKE	The box and pan brake was designed to allow boxes, pans or trays to be folded from one piece of metal. The upper jaw is made of a number of blocks of different widths which can be put together in any combination so as to make a bend of any width desired. This permits the sides to be bent between the opposite sides which have already been bent. The box and pan brake is build with interchangeable and removeable fingers that can be set up quickly.

FABRICATION LAB

MAKING A ONE-PIECE BOX

1. Study page 84 in the Short Course in Sheet Metal Shop Theory text.

2. Determine the dimensions of the materials needed (stretch out for pattern).

3. Shear blank metal piece.

4. Use a marking gauge to layout seams and edges.

5. Notch and clip pattern.

6. Use original pattern and duplicate.

7. Bend up second pattern hem.

8. Bend up sides in box and pan brake (bend sides that bend tabs first).

9. Spot weld corners. If spot welder is not available, pop rivet corners, using one rivet in each corner.

10. Solder inside corners (optional).

11. Put name on box.

FABRICATION LAB

SETTING THE HAND BRAKE

In this lab you will set the hand brake for the proper handle tension and setback for the gage of metal given by the instructor.

1. Obtain a sample of metal from your instructor.

2. Determine the thickness of the sample to the nearest 1/32".

3. Set back the top leaf of the brake 1-1/2 times the thickness of the metal.

4. Set back both ends of the brake equally.

5. Put the sample in the brake and set both ends of the brake to the proper handle tension.

6. Have your instructor inspect the brake after it is completely set.

FABRICATION LAB

SINGLE AND DOUBLE HEMMED EDGE

In this lab you will operate and adjust the bar folder.

Material:
Galvanized steel 3" X 10", 26 gage or lighter.

Specifications:
Make a 3/8" inch double hem on one side of a strip of metal and a 1/4" single hem on the other side.

Directions for Single Hem:

1. Cut a strip of metal to the required size.

2. Set the gage of the bar folder for a 3/8" hem. Before setting the gage, the gage adjustment should be checked by turning the gage adjusting screw until the fingers are flush with the edge of the folding blade. The reading of the gage should then be zero. If it is not, loosen the screw and set the plate.

3. Insert the edge of the metal to be folded between the folding blade and the jaw.

4. Pull the handle forward as far as possible.

5. Insert the hem between the folding wing and the blade with the folded edge facing upward.

6. Pull the handle forward as far as possible, completing the single hem.

7. Reset the gage for a 1/4" width hem and repeat the operations, completing the single hem.

Directions for Double Hem:

1. Reset the gage of the bar folder for a 3/8" width edge. For light metal, both hems may be turned with the same gage setting, it is then possible to complete the double-hemmed edge before resetting the gage.

2. Insert the 3/8" hem with the folded edge upward, between the folding bar and the jaw.

3. Push the handle forward as far as it will go.

4. Release the metal by returning the handle to its former position.

5. Turn the metal over and insert the double hem between the folding bar and the blade, then push the handle forward as far as possible completing the double hem.

INFORMATION SHEET

PARTS OF THE BENDING BRAKE

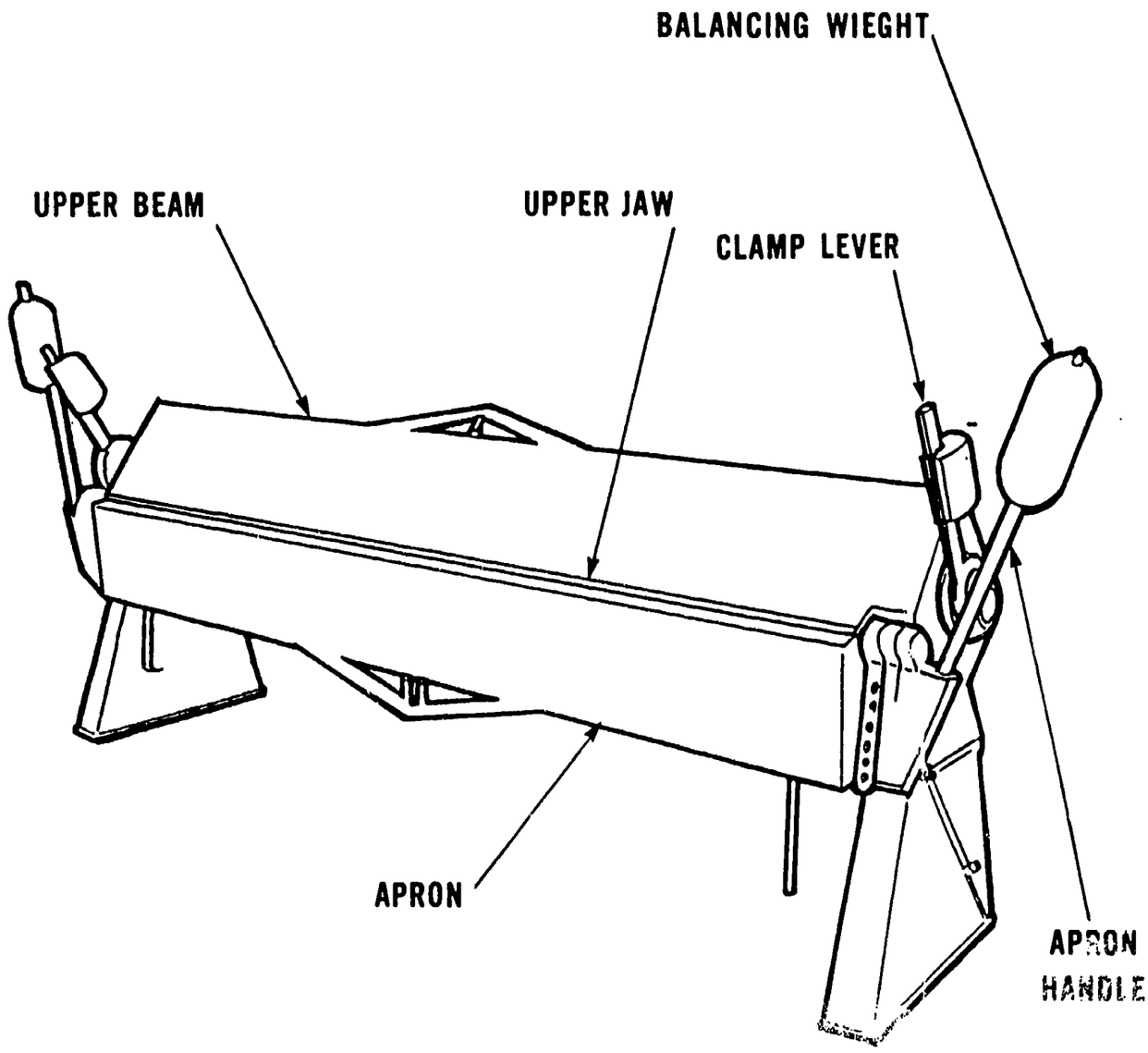

642

INFORMATION SHEET

PARTS OF THE BAR FOLDER

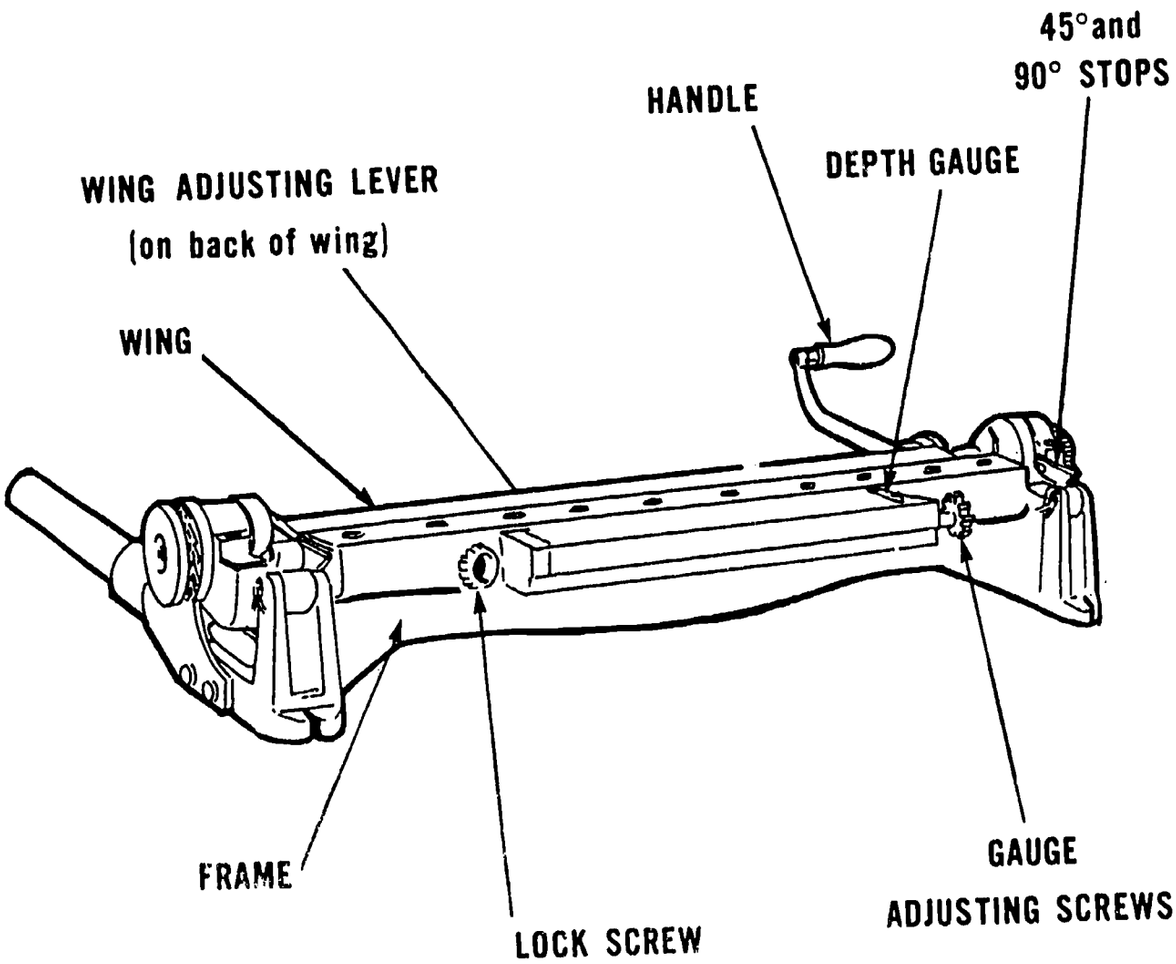

643

FORMING AND ROLLING MACHINES

COMPETENCY:

Fabricate metal using rolling and forming machines.

OBJECTIVES:

1. List safety precautions to be practiced with rolling and forming machines.
2. Identify crimping and beading machines.
3. Outline the purpose of crimping and beading machines.
4. Explain the process of joining round pipe by crimping and beading.
5. Name the main parts of the slip roll forming machine.
6. Explain the purpose of rolling.
7. Explain how to set up the slip roll forming machine.
8. Describe the procedure for making round pipe with grooved seams using the slip-roll forming machine.
9. Consult machine operating manuals.
10. List the types of stakes and describe their use in forming.

LEARNING ACTIVITIES:

1. READ pages 30 - 32, and 37 - 39 in Short Course in Sheet Metal Shop Theory by Richard Budzik.

2. COMPLETE questions 1 - 10 on page 32 and questions 1-4 on page 37 of the text. CHECK your answers with another student or your instructor. REVIEW any questions you missed.

3. READ the Forming and Rolling information sheet.

4. WATCH your instructor demonstrate the use of stakes in forming, the slip roll forming machine, the crimping machine and the beading machine.

5. STUDY the Parts of the Slip-Roll, and Parts of the Rotary Machine information sheets.

6. COMPLETE the Labs on forming and rolling assigned by your instructor.

7. Optional: VIEW the videotape, "Making a Five-Piece Elbow."

APPLICATIONS:

Use the single roll forming machine.
Use crimping and beading machines.
Use rolling machines.

EVALUATION/CHECK OUT:

1. Submit your lab results for evaluation.
2. Submit your Applications Checklist.
3. Demonstrate your knowledge of the objectives in a test situation.

INFORMATION SHEET

FORMING AND ROLLING

FORMING MACHINES

The two types of forming machines used in the sheet metal shop are the plain forming machine and the slip-roll forming machine.

PLAIN FORMING MACHINE

The plain forming machine consists of three rollers through which flat sheet of metal are fed to be formed into cylindrical shapes. The two front rollers are driven either by a hand crank assembly or by an electric motor. The hand powered machine is used most often. The rear, or idler, roll does the actual forming of the cylinder. It is adjustable to accommodate different thicknesses of metal and the diameter of the piece to be formed.

SLIP-ROLL FORMING MACHINE

The slip-roll forming machine operates the same way as the plain forming machine. The difference is that the upper roll on the slip-roll machine can be released and swung away to facilitate removing the formed piece of metal. On both types of machines, the two front rolls act as feeding or gripping rolls while the rear roll gives the proper curvature to the work. The front rolls are adjusted by two screws located at either end of the machine. The rear roll is adjusted by two screws located at the rear of each housing. The grooves in the front and rear rolls are used for forming pieces with wired edges.

The slip-roll forming machine is used to form stove pipes, cans, and other cylindrical shapes.

CRIMPING

The making of the a wavy end on a piece of sheet meal is called crimping. It makes the end of a pipe smaller so it will fit into another pipe of the same dimension. This method eliminates the need of making one end of the pattern for the pipe smaller than the other. However, crimping can be used on light gage metal only. Crimping can also be used when turning large flanges on collars since it aids in stretching metal.

BEADING

Beads are formed on cylindrical objects to serve as stiffeners, reinforcement or ornamentation. The beading machine is a rotary machine equipped with special beading rolls. The standard shapes of beads are the single bead, ogee bead and triple bead.

COMBINATION CRIMPING AND BEADING MACHINES

If a piece of sheet metal is to be both crimped and beaded, this may be accomplished by using the combination crimping and beading machine.

FABRICATION LAB

CRIMPING, BEADING AND CONNECTING A ROUND PIPE

In this lab you will learn how to join round pipe by crimping and beading.

MATERIALS:
2 Round Pipes
Crimping Machine
Beading Machine
Three Sheet Metal Screws

SPECIFICATIONS:
Crimp and bead a round pipe and join it to another round pipe with sheet metal screws.

DIRECTIONS:
1. Take one pipe and crimp it and bead one end so that it will lap 1-1/2" into another pipe.

2. Join the crimped and beaded pipe to the other pipe with three sheet metal screws. Make sure the pipes are straight and the seams aligned before inserting the screws.

3. Turn in to your instructor.

FABRICATION LAB

MAKING A ROUND TANK

In this lab you will learn how to lay out a round tank with a double seam and gain skill in making wired edges, double seams and groove seams.

MATERIALS:
Sheet metal
Wire
Rolling Machine
Burring Machine

SPECIFICATIONS:
Lay out and make a 7" round tank, 4" high with a 1/4" wired edge, a 1/4" grooved seam, and 1/4" double seam.

DIRECTIONS:
1. Lay out the patterns for the tank shown below. Extreme accuracy is essential for the patterns in this project. Allow for all seams and edges.

2. Form and complete the wired edge.

3. Bend the edges for the 1/4" groove seam.

4. Roll the tank and the wired edge.

5. Complete the groove seam.

6. Turn the edge on the bottom with the burring machine.

7. On the bottom piece turn up the outside edge with the burring machine.

8. Connect the bottom to the main part.

9. Set down the seam and finish it.

10. Turn the completed projected in to your instructor.

Pattern for a Round Tank

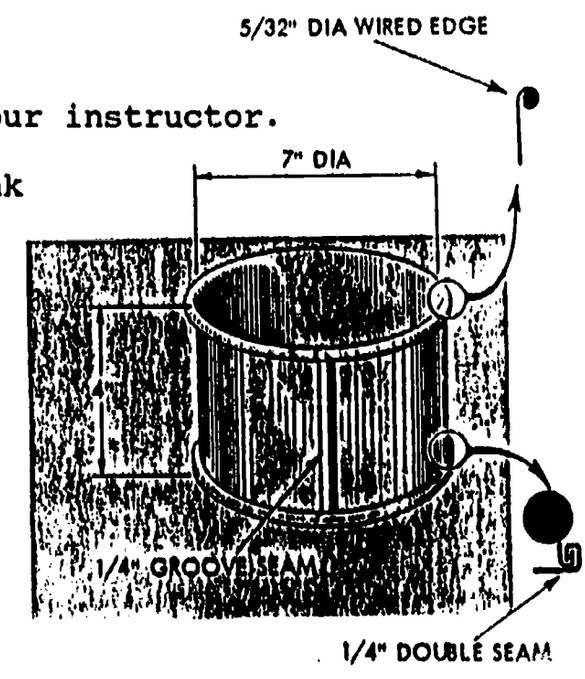

INFORMATION SHEET

PARTS OF THE SLIP-ROLL FORMING MACHINE

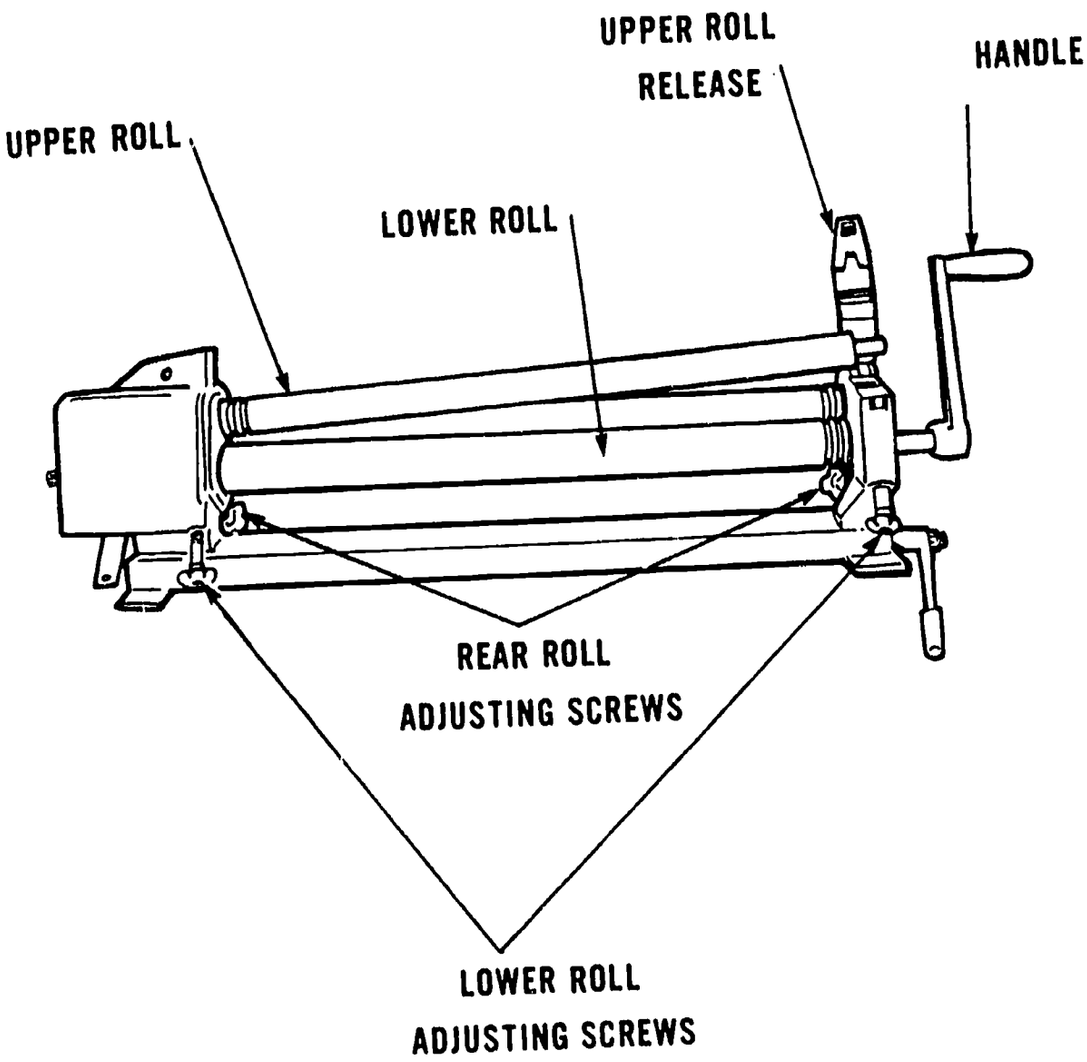

INFORMATION SHEET

PARTS OF THE ROTARY MACHINE

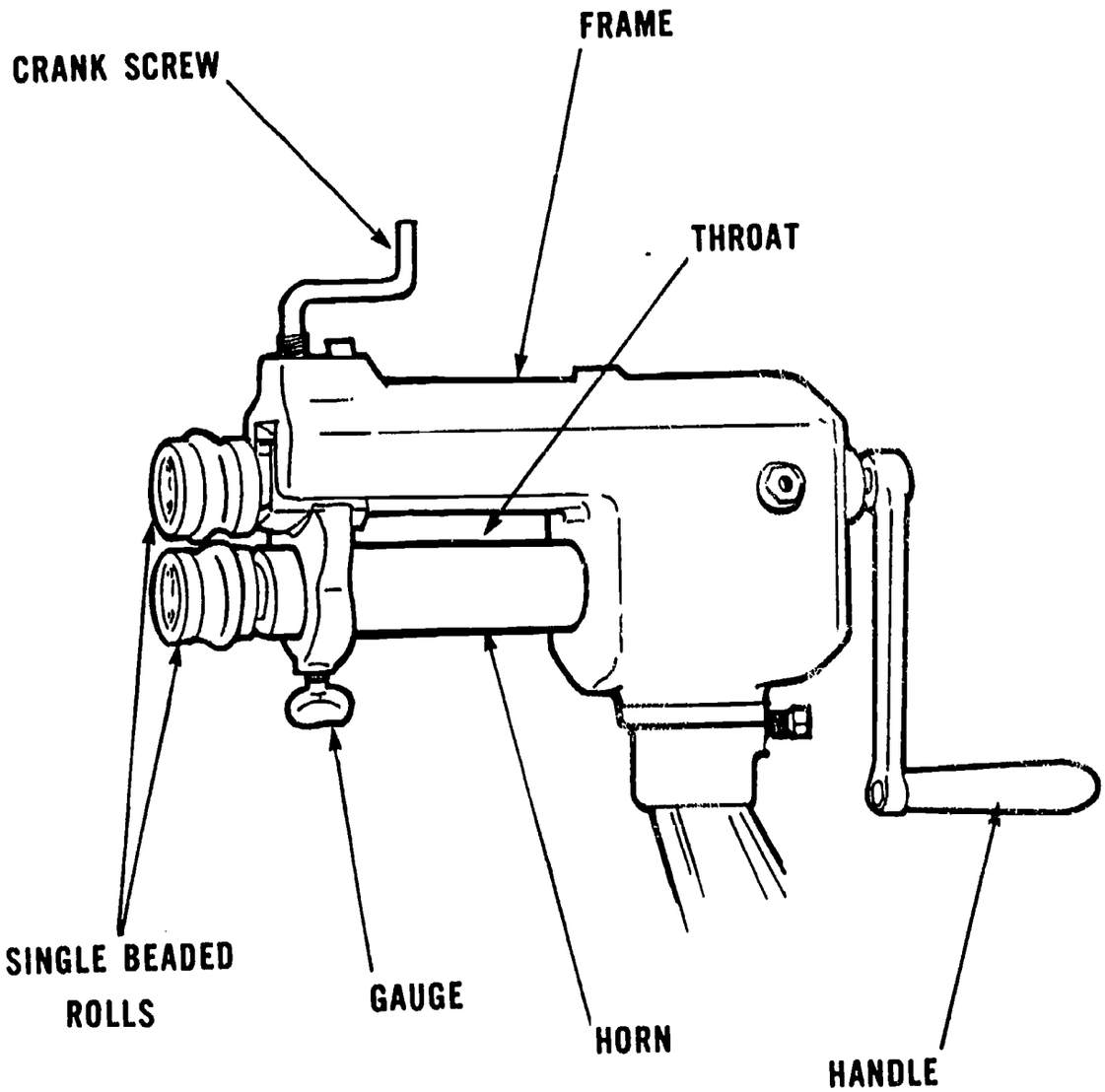

C51

FASTENERS

- HARDWARE SELECTION
- SOLDERING AND SPOT WELDING
- SEAMS, EDGES, LOCKS AND CLIPS

HARDWARE SELECTION

COMPETENCY:

Select and use appropriate fastening hardware.

OBJECTIVES:

1. Identify the types of fasteners commonly used in the sheet metal trade: screws, bolts, washers, nuts and rivets.
2. Explain the appropriate uses for various fasteners.
3. Select fasteners for specific applications.
4. Identify fasteners by using standard grade markings.
5. Describe how to torque and tension fasteners.
6. Summarize the installation and removal procedures for fasteners.
7. Discuss the use of adhesives for fastening metals together.

LEARNING ACTIVITIES:

1. READ the Types of Fasteners information sheet.

2. READ the "Fastener Facts" booklet from Bowman Distributors.

3. CREATE a display board of the various types of fasteners that are used in your shop. EXPLAIN to a group of your peers where, why or how they are used at your work setting. Label each type of fastener.

4. STUDY the fasteners on display in your classroom. PARTICIPATE in a lecture/discussion on fasteners.

5. OPTIONAL: VIEW the slide tape, "Fasteners."

6. ATTEND a lecture/discussion by an industry representative.

7. COMPLETE the Fastening Lab.

8. COMPLETE the Fasteners assignment sheet.

APPLICATIONS:

1. Install and remove four types of fasteners. (Two mechanical fasteners, two non-mechanical fasteners.)
2. Use sheet metal rivets.

3. Use pop rivets.
4. Select the appropriate fastener for a job.

EVALUATION/CHECK OUT:

1. Submit your Fastener Lab results.
2. Submit your Display Board.
3. Submit your Applications Checklist.
4. Demonstrate your knowledge of the objectives in a test situation.

INFORMATION SHEET

TYPES OF FASTENERS

TERMS AND DEFINITIONS

A. Mechanical Fasteners: All fasteners that can be hammered, screwed, or driven by hand or with hand tools.

B. Non-mechanical Fasteners: All fastening materials or processes that attach or join metal or plastic with heat or adhesives.

C. Locknut: Term applied to the outer of two nuts on a bolt when tightened together.

D. Peening: Spreading metal into a flat or rounded shape.

E. Nut: A small metal block which is drilled and threaded to a fit a bolt.

F. Handtight: A nut or bolt that has been tightened by hand and not with a wrench.

TYPES OF MECHANICAL FASTENERS

RIVETS	Rivets are a metal pin with a head on one end that is placed through holes in metal and peened into place. Rivets are made of several types of metals. Usually the rivet chosen should be the same metal as the piece it is used on. They vary in size and shape and should be selected and applied according to specifications.
Sheet Metal Rivet	A sheet metal rivet is a pin with a smooth shaft and a flat, round, or countersunk head; the headless and end of the rivet is inserted through two or more pieces of metal and a similar head is hammered or formed on it.
Pop Rivet	Pop rivets are designed to be driven with a rivet gun.
SCREWS	Machine screws are used in general assembly of parts and machine tools.

Cap	Used in assembly where a quality and finished appearance is required.
Set screws	Used in recessed or hidden locations such as holding pulleys on shafts.
Drive	Permanent type screws that are driven into a drilled or punched hole. Used for attaching materials to metal and used especially when specifications call for a fastener that cannot be easily removed.
P-K tapit	A screw that is driven with a hex socket driver; it forms its own hole and has a serrated washer next to the head that serves as a built-in brake to keep it from stripping the hole. It is used mostly on light gauge metal and is one of the most frequently used screws used in sheet metal work.
Thread Forming	A screw that cuts its own thread. Requires that a starter hole be drilled for the tip to fit into. Comes in varied sizes and head shapes.
BOLTS	Bolts are metal threaded fasteners which may be used in threaded holes or with a nut.
Stove	Used to fasten light metal parts.
Carriage	A round headed bolt with a square neck which keeps the bolt from turning in the hole when the nut is tightened. An all-purpose bolt used frequently in sheet metal.
Hex head	A bolt used on larger projects. The head can facilitate a wrench so the bolt can be tightened very securely.
NUTS	Used with bolts when parts do not have threaded holes.
Hex nut	An all-purpose nut used in general sheet metal work.
Washer-base nut	A nut with a washer attached. Available with or without locking features. Helps eliminate losing washers.
Hex cap	Used in assembly where a quality and finished appearance is required.

Jam	Used to lock a standard nut in place.
Castle or slotted	Used with a bolt that has a hole through the threads so that a cotter pin may be used to lock the nut in place.
Wing	Used when the nut must be tightened and loosened by hand.
Acorn	Used to protect the threaded end of a bolt.
WASHERS	Washers are used to spread the clamping pressure evenly over a larger area and to prevent damaging the surface of the work piece.
Flat	All purpose washer used both as a spacer and to modify oversize holes.
Lock	Prevents the bolt from loosening during vibration.
Split lock	All-purpose washer with added holding strength. Most frequently used in general purpose sheet metal work.
COTTER PINS	Also known as retaining pins. Placed in a drilled hole in a shaft to keep a part in place.
SNAP RINGS	Used in internal and external grooves.
KEYS	Used to hold gears or pulleys on shafts.

TYPES OF NON-MECHANICAL FASTENERS

RESISTANCE SPOT WELDER	A machine that burns or melts two pieces of metal together without any added materials.
GLUES, EPOXIES SOLVENTS	Adhesives used to secure duct liner, to secure metal to walls, to secure seams in plastic, and similar applications.
SOLDERING	Process by which metal is joined together by melting other metal into a seam or joint.

ASSIGNMENT SHEET

FASTENERS

---

1. Define the following and give an example of each.

Mechanical Fastener:

Non-mechanical Fastener:

2. Explain the terms ASTM and SAE and what their responsibilities are.

3. Draw a sketch showing the following fastener SAE marks:

Grade 5 Bolt Head

Grade 1 Bolt Head

Grade 8 Bolt Head

4. What is the primary function of a washer?

5. What type of bolt is used to fasten light metal parts?

6. What type of nut can be loosened or tightened by hand?

7. Name a screw that is used in a recessed or hidden location.

8. What type of washer is used to modify oversized holes?

9. What is the purpose of a cotter pin?

10. What is the purpose of keys?

11. How do pop rivets differ from sheet metal rivets?

12. Name three types of non-mechanical fasteners.

13. How are adhesives used in sheet metal?

14. How do torque and tension interact in fastener tightening?

15. List two important factors in fastener tightening.

16. Why is tensioning more important than torqueing?

17. Explain what happens to an installation when a nut is used over a second and third time.

SOLDERING AND SPOT WELDING

COMPETENCY:

Solder and spot weld metals.

OBJECTIVES:

1. Summarize safety rules to be observed in soldering and spot welding operations.
2. List the uses of soldering in sheet metal work.
3. List the characteristics of solder and flux.
4. Discuss solder techniques.
5. List rules for the proper maintenance of soldering coppers.
6. Use soldering copper.
7. Discuss guidelines for soldering with various metals.
8. Identify materials solder consists of.
9. List the three items needed to join two pieces of metal by soldering.
10. List the three reasons for using flux.
11. Summarize the steps in tinning a soldering iron.
12. Discuss principles of resistance spot welding.
13. Adjust working elements on a resistance spot welder.
14. State major points of resistance in a spot welding application.
15. Explain relationships among time, current and pressure in resistance spot welding.
16. Identify appropriate tip for job.
17. Identify guidelines for spot welding on various types of steel.

LEARNING ACTIVITIES:

1. READ pages 49-51 in the Short Course in Metal Shop Theory by Richard Budzik.

2. COMPLETE the questions at the end of the chapter in the text. Questions 1-13 on page 51.

3. READ and STUDY the information sheet Soldering and Resistance Welding Terms and Definitions.

4. READ and STUDY the information sheet on Soldering Sheet Metal.

5. OBSERVE a demonstration from your instructor on the soldering process.

6. STUDY the information sheet titled Safety Rules for Working with Spot Welders.

7. READ the information sheet on Spot Welding.

8. READ and STUDY the information sheet on the Guidelines for Spot Welding Various Materials.

9. WATCH your instructor demonstrate the proper technique of spot welding on sheet metal.

10. COMPLETE the Soldering Assignment Sheet.

11. CREATE samples of well made and poorly made seams or joints by the soft soldering method. Mount them on a display board and label them to indicate what constitutes a good solder joint and a poorly made joint.

12. DISPLAY samples of commercially made products assembled by the soft solder technique. Arrange them in such a way to permit the solder seams to be seen and compared.

13. PARTICIPATE in class discussion and lecture on soldering and spot welding.

14. OPTIONAL: VIEW videotapes as assigned by instructor.

APPLICATIONS:

1. Clean and shape a soldering copper.
2. Tin a soldering copper.
3. Tack solder to hold two pieces in a selected position.
4. Solder a lap seam in the flat position.
5. Solder a vertical seam.
6. Prepare and solder a workpiece of aluminum alloy.
7. Adjust the tong on a resistance spot welder.
8. Spot weld two pieces of sheet metal.
9. Clean spot welding tips.

EVALUATION/CHECK OUT:

1. Submit your Soldering Assignment Sheet.
2. Demonstrate your understanding of the objectives in a test situation.

INFORMATION SHEET

SOLDERING AND RESISTANCE WELDING TERMS AND DEFINITIONS

ACID SWAB	A small brush used to transfer acid from a container to a seam.
SAL AMONIAC	A white chrystalline form of ammonium chloride used as a cleaning agent in soldering; available in block or powder form.
FLUX	A substance used to help metal fuse together by preventing oxidation.
ROSIN	A flux made from distilled crude turpentine or chemically treated pine stumps.
NUGGET	The area formed at the exact spot where two metals are fused together in resistance spot welding.
WELDMENT	The total thickness of any two metals being spot welded.
TONGS	Hollow extension arms that extend horizontally from a resistance spot welder to hold the electrode tips in place, to conduct current, and to supply circulating water to the electrode tips.
ELECTRODE TIPS	Tapered devices with flat-surfaced points extending vertically from the tongs to conduct current to the exact spot to be welded.
INTERFACE	The point in AC circuits expressed in kilovolts.
SHUNT CURRENT	A diversion or feedback of current caused by locating spot welds too close together or produced by oxidized materials improperly cleaned.
KVA RATING	The power in AC circuits expressed in kilovolts.

INFORMATION SHEET

SOLDERING SHEET METAL

Soldering may be defined as a metal joining method using a filler metal (solder) which has a melting point or range below 800 degrees F. The base metal is not melted during joining. Sheet metal soldering today is practically a lost art and has ben largely replaced by welding in many shops, chiefly because soldered joints have relatively low joint strength. However, in spite of this limitation, soldering does have some important practical and economic advantages in sealing, filing, and making low-strength joints in metals up to about .050 inch (18 gauge) in thickness.

Three things are needed to solder:

1. Heat source-brings metals to soldering temperatures so solder can melt and flow into the joint.
2. Flux - allows molten solder to react with and spread over the base metal surfaces.
3. Solder - bonds with the base metal surfaces. The bond depends on chemical alloying and physical adhesion of the solder with the metal surface.

Soldering irons are sometimes referred to as soldering coppers. The use of a soldering iron is to convey heat from the fire to the place to be soldered. Copper is a good conductor of heat as it absorbs heat rapidly.

Characteristics of soldering coppers:

1. Soldering coppers are made of solid copper tapered on one end and drilled and tapped on the other end so a steel shank can be screwed in to hold a handle.
2. Soldering coppers are rated in pounds per pair and stamped so the weight can be identified.
3. Soldering coppers are cut from square copper but beveled into an octagon shape at the time of manufacture to form more convenient working edges.
4. Smaller coppers are traditionally used for lighter weight metals and larger coppers are used for heavier weight metals.
5. Coppers can be tapered to match job requirements.

Guidelines for keeping soldering coppers clean:

1. If a copper is not cleaned frequently, flux and impurities will form a scale on the tip of the copper.
2. When scale accumulates on a copper, it serves to

insulate the copper and prevent heat from transferring from the copper to metal.

3. Coppers can be cleaned while soldering is being done by dipping the tip of the copper into a prepared solution of sal amoniac and water.
4. On job site work where sal amoniac solution is not available, a steel brush can be used to clean the residue off a copper tip each time it is removed from the furnace.

Steps in properly maintaining soldering coppers:

1.	Forging	This involves heating a copper in a furnace until the copper is cherry red, then filing off all the scale on the copper with a coarse file.
2.	Drawing	This involves placing the heated copper on an anvil and hammering the copper until it is drawn back to its original shape.
3.	Filing	This involves placing the heated copper in a vise and dressing the corners of the point with a fine file.
4.	Tinning	This involves heating the copper until it is cherry red, placing the tip on a block of sal amoniac, and adding small amounts of solder while rubbing the copper on the block of sal amoniac, then turning the copper until all sides are tinned.

Soldering techniques and their processes:

1.	Skimming	Coating one edge of a joint with a thin coat of solder.
2.	Tacking	The process of tacking a seam in several places so it will hold together while the seam is being properly soldered.
3.	Sweating	The process of applying a coating of solder to each surface to be joined together, placing the soldered surfaces together, then laying the hot copper on top of the seam to fuse the surfaces together and leave no excess solder showing on the surface.

Other metals and guidelines for soldering:

1.	Lead	Because this metal oxides quickly, the seam must be scraped with a pocket knife; a rosin flux should be used, and the copper should be a bit colder than a copper used for soldering galvanized.
2.	Copper	Should never be soldered with raw acid;

		it may be cleaned with raw acid and immediately wiped off, and a rosin flux should be used.
3.	Stainless	Should be soldered with zinc chloride or a specially designed soldering flux.
4.	Brass	May be cleaned with raw acid and immediately wiped off; should soldered with zinc chloride.
5.	Tin plate	Is already coated with tin or lead; can easily be soldered with rosin flux.
6.	Tin	Tin-lead alloys containing less than 10% of tin are both weak and brittle; the alloy containing 5% of tin is greatly improved in both strength and wetting power by the addition of 1.5% silver.
7.	Lead	Pure rosin can be used on workpieces of lead.

INFORMATION SHEET

SAFETY RULES FOR WORKING WITH SPOT WELDERS

1. Wear safety glasses or a face shield for all spot welding activity to avoid metal or oxides that are expelled from the joint.

2. Make sure the work area is properly ventilated; zinc and lead coatings give off fumes that can be toxic and cause illness.

3. Wear a long sleeve shirt and a face shield when working around vaporized zinc; when the zinc condenses to a solid it forms fishhook-shaped particles that imbed themselves in body tissue and cause annoying irritation.

4. Turn the spot welder off before making adjustments.

5. Never open the side panel on a spot welder; the high voltage elements inside are extremely dangerous.

6. Always turn the water off when finished with spot welding activity.

7. Never wear rings, watches, or jewelry when operating a resistance spot welder.

667

INFORMATION SHEET

SPOT WELDING

Spot welding is probably the most commonly used type of resistance welding. Resistance spot welding is a rapid means of temporarily or permanently bonding metal surfaces. The material to be joined is placed between two electrodes, pressure is applied, and a quick shot of electricity is sent from one electrode through the material to the other electrode.

There are three stages in making a spot weld:

1. The electrodes are brought together against the metal and pressure applied before the current is turned on. To make a good spot weld it is necessary to have close control of the time the current is flowing; time is manually set on spot welders and is the only controllable variable in most spot welding.
2. The current is turned on momentarily. Alternating current is normally used for resistance spot welding, and most procedures are based on a 60-cycle time which is equal to one second.
3. The current is turned off, but the pressure continued. This is called the hold time. The hold time forges the metal while it is cooling. The primary purpose of pressure is to hold the parts to be welded in close contact at the joint interface and provide continuity for current flow.

The relationship of time, current, and pressure help create the heat in the weld. Time helps determine both size and shape of the weld nugget. The time that current flows into the joint is determined by the thickness and type of material, amount of current flowing and the cross-sectional area of the welding tip contact surfaces. The current flows through the tongs and electrode tips as they exert pressure needed to hold the parts to be welded.

Heat balance is the condition of spot welding in which the fusion zones of the metals being joined are subject to equal heat and pressure. When the metals are the same kind and thickness, and the tips are the same size, there is usually no problem with heat balance. Problems with heat balance can occur when joining dissimilar metals, especially when joining copper and steel. With dissimilar metals, electrodes and tips have to be sized according to characteristics of the metals being used.

Regular spot welding usually leaves slight depressions on the metal which are often undesirable on the "show side" of a finished product. These depressions are minimized by the use of larger-sized electrode tips on the show side.

Spot welders are made for both direct and alternating current. The amount of current used is very important. Too little current produces only a light tack which gives insufficient strength. Too much current causes burned welds.

Spot welds may be made one at a time or several welds may be completed at one time, depending on the number of electrodes used. To dissipate the heat and cool the weld as quickly as possible the electrodes are generally water-cooled.

The following list includes the major points of resistance in a spot welding application:

1. The contact point between the top electrode and the top workpiece.
2. The top workpiece.
3. The interface of the top and bottom workpiece.
4. The bottom workpiece.
5. The contact point between the bottom electrode and the bottom workpiece.
6. Resistance of electrode tips.

Special considerations need to be remembered when working with spot welder tips:

1. Tips should be cleaned often with a tip cleaner only after the machine has been turned off.
2. Pressure between the tips should be checked with the following procedure.
   a. Close the tongs.
   b. If there is too much pressure, the top tip will try to slide over to one side of the workpiece.
   c. If the tips don't quite touch, there will not be enough pressure to make a good weld.
3. Always remember that the amount of pressure on the tips has an important effect on the amount of weld current that flows through the joint.
4. Always select the correct tip for the job.

Shunt currents are a feedback of current caused by locating spot welds too close together. Shunt currents flowing through a previous spot weld can take current away from a second weld to be made, especially if two spot welds are too close together. They can occur with all metals, but they are more common with metals, such as aluminum, which has low electrical resistance. Standard procedures for setting up

spot welding activity should reflect the KVA rating of the machine, tong size, voltage, and material thickness.

Factors that can contribute to poor welds:

1. Dirty electrode tips.
2. Convex or concave electrode surfaces.
3. Improper selection of electrode tip size.
4. Misalignment of electrodes.
5. Improper electrode pressure.
6. Heat imbalance due to joining two dissimilar materials.
7. Improper amount of current used.

INFORMATION SHEET

GUIDELINES FOR SPOT WELDING VARIOUS MATERIALS

1. Spot welding low-carbon steel.

   a. All mild or low-carbon steels can be readily spot welded with proper equipment and correct procedure.
   b. Carbon steels have a tendency to develop hard, brittle welds as the carbon increases if proper post-heating procedures are not used.

2. Spot welding low-alloy and medium-carbon steel.

   a. The resistance factor for low-alloy and medium-carbon steels is higher than the resistance factor for low carbon steels.
   b. The higher resistance factor makes current requirements slightly lower.
   c. Time and temperature are more critical because of metallurgical changes, and higher pressures and longer welding times are required.

3. Spot welding stainless steel.

   a. Chrome-nickle alloys have a very high resistance factor and can be readily spot welded.
   b. The longer the weldment is held at critical temperature, the greater the possibility of carbide precipitation.

4. Spot welding dip-coated or plated steel.

   a. Dip-coating is less expensive than electro-plating, and metals dip-coated with zinc or galvanized are therefore more frequently used.
   b. In dip-coating, the zinc coating is frequently uneven, so this means the resistance factor will vary from weld to weld.
   c. It is difficult to set specific guideline for dip-coated and plated steels; each job will require individual adjustments.

5. Spot welding aluminum and aluminum alloys.

   a. Surface cleaning is critical for aluminum materials because surface resistance becomes a determining factor as to whether or not a resistance weld can be made.
   b. Surface resistance on aluminum is much less immediately after chemical cleaning, so spot welding should be performed as soon as possible after the aluminum has been cleaned.

c. Higher welding currents and greater electrode force are necessary when spot welding aluminum and aluminum alloys.

ASSIGNMENT SHEET

SOLDERING

TRUE OR FALSE:

1. Soldering is a metal joint method using a filler alloy which melts and flows above 800 degrees and when molten, the solder reacts with and bonds to the base metal which does not melt.

2. Sheet metal, strip or wire up to about .050 inch can be soldered, thicker sections are usually welded for best results.

3. Stainless steel can be soldered to each other and can also be soldered to other metals and materials.

4. An advantage to soldering as compared to brazing or welding is: less distortion is likely, especially in thin gauges because of lower temperature used.

5. Because of low joint strength, soldering is usually limited to sealing and where joint strength is important, joints must be mechanically reinforced.

6. The flux can cut through layers of grease, oil, surface dirt or rust, so the metal parts don't necessarily have to be well cleaned before the flux can do its work.

7. Never use a flux stronger than necessary for hard to solder metals.

8. A soldered joint is weakest, when the solder between the joined parts is as thin as possible.

9. A poor bond in soldering may occur from joint clearance that is too large or too small.

10. Stainless steel as compared to other solderable metals, requires different soldering practices because when heat is applied to the stainless, it will react in different ways.

11. Tinning the metal surfaces before soldering is a good recommended procedure and soldering of tinned parts is called sweat soldering.

12. Test methods are used to determine solderability.

13. Oxide scale on a dirty or scaled point acts as an insulator and prevents efficient transfer of heat to the work.

14. On tinned surfaces, a liquid corrosive flux is never used.

FILL IN THE BLANK:

1. Sheet metal soldering today is practically a lost art and has been largely replaced by _____ in many shops, chiefly because soldered joints have relatively low joint strength.

2. All metals have a thin _____ film on their surfaces, although you cannot always see it and the flux removes this film and allows the molten solder to wet or bond to the metal.

3. When soldering a joint the molten solder penetrates or is drawn into the joint by a combination of wetting and spreading action of the solder, together with _____ action - much like a blotter soaking up ink.

4. _____ corrosion takes place when two unlike metals in contact with each other form and electrical circuit in the presence of an electrolyte.

5. Where metal is subject to heating and cooling, especially on long lengths, _____ joints are used.

6. It is always a good soldering practice to remove the _____ used after soldering from the joint being soldered.

7. Non-activated rosin fluxes consist of rosin dissolved in a solvent such as _____ or _____.

8. A _____ test should be made to be certain if the soldered bond is strong.

9. The more _____ in the solder, the less is the rate of darkening in the atmosphere and the better the corrosion resistance and color match to sheet metal.

10. It is always a good practice to _____ the surface of metals with an abrasive cloth or stainless wire brush before soldering.

11. On lap seams of any length, it is good practice to tack solder the joint every _____ or _____ before beginning soldering.

12. When soldering _____ seams, you can only apply a limited amount of heat at a time; otherwise the solder will run down the joint.

13. When soldering dissimilar metals, _____ and _____ have to be sized according to characteristics of the metals being used.

14. Soldering coppers are made of solid copper _____ at one end and drilled and _____ on the other.

15. The four steps in properly maintaining soldering coopers are:

1. _____

2. _____

3. _____

4. _____

SEAMS, EDGES, LOCKS AND CLIPS

COMPETENCY:

Use seams to join two pieces of metal.

OBJECTIVES:

1. Identify commonly used seams.
2. Select the appropriate seam for a particular project.
3. Identify the purpose of a seam.
4. Identify types of locks and clips.
5. Differentiate between a seam and a lock.
6. Identify the proper location for commonly used seams.
7. Identify types of edges.

LEARNING ACTIVITIES:

1. READ "Seams, Edges and Locks" from A Short Course in Sheet Metal Shop Theory, pages 40-45.

2. READ "Methods and Techniques of Forming the Elbow Edge Lock Seam" (pp. 143-145), "Types of Seams and Methods of Fastening Used on Round Work" (pp. 150-155), "Selection of Seams" (page 156), "Location of Seams" (pp. 157-160), "Seam Allowances for Riveted Lap Seams and Elbow Edge Lock Seams" (page 161) from Practical Sheet Metal Layout: Round Fittings Used Today Including Methods and Techniques of Fabricating Round Work.

3. COMPLETE questions 1-8 on page 45 from A Short Course in Sheet Metal Shop Theory. CHECK your answers with another student or your instructor. REVIEW any questions you missed.

4. PARTICIPATE in lecture/discussion on seams.

5. WATCH your instructor DEMONSTRATE how basic seams, locks clips and edges are formed and finished.

6. IDENTIFY the seams, locks, clips or edges on sheet metal projects.

7. COMPLETE the Fabrication Labs assigned by your instructor.

APPLICATIONS:

1. Demonstrate the ability to form the following edges:
   Single Hem
   Double Hem
   Wired Edge
2. Demonstrate the ability to form three of the following seams:
   Pittsburgh Seam
   Lap Seam
   Riveted Corner Seam
   Pocket Lock Seam
   Grooved Seam
   Standing Seam
3. Demonstrate the ability to form two of the following locks:
   Government Lock
   Common Lock
   Pocket Lock
4. Demonstrate the ability to use the following connectors:
   Drive cleat
   "S" cleat

EVALUATION/CHECK OUT:

1. Submit your Fabrication Labs.
2. Submit your Applications checklist.
3. Demonstrate your knowledge of the objectives in a test situation.

FABRICATION LAB

SINGLE AND DOUBLE HEMMED EDGE

In this lab you will operate and adjust the bar folder to create a single and double hemmed edge.

MATERIAL:

Galvanized steel 3" X 10", 26 gage or lighter.

SPECIFICATIONS:

Make a 3/8" inch double hem on one side of a strip of metal and a 1/4" single hem on the other side.

DIRECTIONS FOR A SINGLE HEM:

1. Cut a strip of metal to the required size.

2. Set the gage of the bar folder for a 3/8" hem. Before setting the gage, the gage adjustment should be checked by turning the gage adjusting screw until the fingers are flush with the edge of the folding blade. The reading of the gage should then be zero. If it is not, loosen the screw and set the plate.)

3. Insert the edge of the metal to be folded between the folding blade and the jaw.

4. Pull the handle forward as far as possible.

5. Insert the hem between the folding wing and the blade with the folded edge facing upward.

6. Pull the handle forward as far as possible, completing the single hem.

7. Reset the gage for a 1/4" width hem and repeat the operations, completing the single hem.

DIRECTIONS FOR A DOUBLE HEM:

1. Reset the gage of the bar folder for a 3/8" width edge. For light metal, both hems may be turned with the same gage setting, it being possible to complete the double-hemmed edge before resetting the gage.

2. Insert the 3/8" hem with the folded edge upward, between the folding bar and the jaw.

3. Push the handle forward as far as it will go.

4. Release the metal by returning the handle to its former position.

5. Turn the metal over and insert the double hem between the folding bar and the blade, then push the handle forward as far as possible completing the double hem.

FABRICATION LAB

MAKING A GROOVED SEAM BY HAND

In this lab you will develop the ability to make a grooved seam by hand.

MATERIAL:

Two pieces 3" X 12" 28-gage steel

SPECIFICATIONS:

Make a 1/4" grooved seam by hand, using scrap metal.

DIRECTIONS:

1. Cut two pieces of metal to the required size.

2. Set the gage of the folder for a 1/4" lock.

3. Turn the lock on each piece of metal.

4. Hook the two pieces together.

5. Place the metal to be grooved on a flat stake and flatten the seam slightly with a mallet. Be sure to keep the two pieces tightly hooked.

6. Select the proper size of hand groover, choosing one having a slot about 1/16" wider than the width of the lock.

7. Place the groover over the seam at one end and strike lightly but firmly with a hammer, making a short groove.

8. Repeat the process and groove the other end.

9. Groove the balance of the seam by moving the groover along the seam. Keep the groover moving along the seam. Do not finish the seam in one pass. It will be a neater job to groove the seam gradually in two or three passes.

10. Flatten the seam with a mallet to make it smooth, completing the grooved seam. The mallet is the only proper tool for this operation. Using a hammer would mar the work.

11. Measure the width of the metal and determine how much metal was used to form the seam.

FABRICATION LAB

MAKING A DUCT WITH A PITTSBURGH SEAM

In this lab you will learn how the Pittsburgh seam is used in making duct work.

SPECIFICATIONS:

Make a 6" X 4" duct, 12" long with a Pittsburgh seam on one corner.

DIRECTIONS:

1. On a piece of 26 gage galvanized steel lay out the pattern for a Pittsburgh lock.

2. Form the pocket lock for the Pittsburgh seam.

3. Bend the single edge.

4. Starting with the side nearest the single edge, bend the corners of the duct.

5. Finish the seam and turn the project in to your instructor.

WELDING

682

WELDING

COMPETENCY:

Use welding equipment and materials safely.

OBJECTIVES:

1. Define terms related to welding tools and equipment.
2. List basic rules for the safe use of welding tools and materials.
3. Explain plasma welding processes.
4. Identify special considerations for welding on plastic.

COMPETENCIES:

1. Set up and clean oxyacetylene welding equipment.
2. Cut, weld, and solder using oxyacetylene welding equipment.

OBJECTIVES:

1. Identify the parts of an oxyacetylene welding system.
2. Identify the parts of an oxyacetylene welding torch.
3. Differentiate between different size welding tips for an oxyacetylene welder.
4. Explain the effects of heat on various types of material to be welded.
5. Identify a neutral flame and an oxidizing flame.
6. Explain the tempering and annealing processes.
7. Explain the techniques for surface preparation.
8. List the various types of filler rods.
9. Explain the purpose of pressure regulator valves on the system.
10. Identify various fluxes available and list their application.
11. Explain how to set-up an oxyacetylene welding system.
12. Explain how to clean an oxyacetylene welding system.
13. Summarize the importance of keeping such a system clean.
14. Describe how to test an oxyacetylene welding system.
15. Differentiate between a neutralizing flame and an oxidizing flame.
16. List the steps for bleeding lines on an oxyacetylene welding system.
17. Discuss the importance of bleeding lines.
18. Use a stick electrode.

COMPETENCY:

Braze with oxyacetylene welding equipment in all positions.

OBJECTIVES:

1. Explain the relevant safety practices and procedures.
2. Identify different types of brazing rods and their applications.
3. Identify different types of fluxes and their applications.
4. Explain what happens when tack brazing a work piece is omitted.
5. List materials that are not easily brazed.
6. Explain the importance of and purpose for surface preparation.
7. Describe the basic brazing process.

COMPETENCIES:

1. Select, prepare, adjust, and operate metallic inert gas welders (MIG).
2. Select, prepare, adjust, and operate tungsten inert gas welders (TIG).

OBJECTIVES:

1. Explain the relevant safety practices and procedures.
2. Describe the components of MIG and TIG welders.
3. Describe how the welders function.
4. Differentiate between ferrous and non-ferrous metals.
5. Identify special conditions for welding in vertical, horizontal, and overhead positions.
6. Explain the advantages of MIG and TIG.
7. Describe filler rods available and list their applications.
8. List types of metals that can be welded with MIG and TIG equipment.
9. Explain surface preparation techniques for MIG and TIG welding.
10. Demonstrate how to clean welds and welding equipment.

LEARNING ACTIVITIES:

The competencies in this unit can be obtained by using one of the following methods. Discuss your choice of addressing the objectives with your supervisor at work and your instructor.

1. ENROLL in a welding course. Usually this will be

in addition to your regular class time. Welding courses are offered at the technical colleges, and can often be take in the evening.

2. WORK CLOSELY with a journeyman or other employee at your work site to achieve the objectives. Make sure all of the competencies are addressed by using the Applications Checklist and the objectives listed in this unit.

APPLICATIONS:

1. Set up an oxyacetylene welding system.
2. Clean an oxyacetylene welding system.
3. Test an oxyacetylene welding system.
4. Light and extinguish the cutting torch.
5. Bleed the lines on an oxyacetylene welding system.
6. Select filler rod and flux correctly according to the job.
7. Make straight cuts on carbon steel plate.
8. Braze ferrous metal.
9. Braze non-ferrous metal.
10. Use different size tips for an oxyacetylene torch.
11. Weld in a vertical (up/down) position.
12. Weld in a horizontal position.
13. Weld in an overhead position.
14. Weld in a flat position.
15. Weld stainless steel with shielded metal arc welding equipment.
16. Prepare, adjust and operate an MIG welder.
17. Prepare, adjust and operate a TIG welder.
18. Strike an arc with an MIG welder.
19. Strike an arc with a TIG welder.
20. Use a stick electrode.
21. Use a plasma welder.
22. Weld on plastic.

EVALUATION/CHECK OUT:

Submit your Applications checklist.
Each application must be signed off by your instructor or supervisor.

RIGGING

RIGGING

COMPETENCIES:

1. Use rope, chains, slings, cables, and climbing devices safely.
2. Follow hand signals.
3. Move heavy equipment safely.
4. Use lifting devices properly.
5. Rig various types of scaffolding.

OBJECTIVES:

1. Estimate the weight of a load to ensure that it can be lifted safely.
2. Demonstrate how to tie various knots.
3. Identify types of cables, slings and hoists.
4. Inspect rope, sheaves, drums, hoists, cables and chains for safety.
5. Calculate safe working loads for rigging devices.
6. List the properties and characteristics of natural fiber and synthetic fiber rope, wire rope and chains.
7. Join and splice rope and wire rope.
8. Demonstrate proper hand signals for lifting and moving loads.
9. Interpret hand signals used on the job.
10. Identify basic types of scaffold and ladders.
11. Explain how to check systems completely before climbing.
12. Describe the proper storage procedures for rigging devices.
13. Explain the procedures for moving heavy equipment.

LEARNING ACTIVITIES:

1. READ the Rigging information sheet.

2. READ the "General Rope usage: Suggested Practices and Procedures" booklet.

3. READ the "Heads Up" Hoist Safe Practice Guide booklet.

4. READ the "Safety Guidelines for Scaffolding" information sheet.

5. COMPLETE the Rigging Lab.

6. OPTIONAL: VIEW the videotapes assigned by your instructor.

7. WATCH your instructor demonstrate the hand signals associated with mobile crane operation. MEMORIZE the hand signals on the Hand Signals Information Sheet. PRACTICE giving hand signals.

8. ATTEND the class presentation given by a representative from business and industry.

9. BRING in three examples of rigging software used in your work place. The samples may be good or damaged. DEMONSTRATE and EXPLAIN how they are used to the class. If the sample is damaged, explain how the damage occurred.

10. WATCH your instructor demonstrate how to tie and splice rope. PRACTICE tying and splicing rope.

11. VIEW the rigging software on display in your classroom.

12. COMPLETE the Estimating Weights assignment sheet.

13. COMPLETE the Oral Quiz on Hand Signals.

APPLICATIONS:

1. Tie the following knots: reef knot, bowline knot, timber hitch, and scaffold hitch.
2. Splice rope using an eyesplice and a crown knot with a back splice.
3. Use a personnel lift safely.
4. Use a materials lift safely.
5. Use a scissors lift safely.
6. Rig a piece of scaffolding.

EVALUATION/CHECK OUT:

1. Submit the Estimating Weights Assignment Sheet.
2. Submit the Rigging Lab.
3. Demonstrate the hand signals for lifting and moving in a test situation.
4. Submit your checklist of completed Applications.
5. Demonstrate your knowledge of the objectives in a test situation.

INFORMATION SHEET

HAND SIGNALS FOR BOOM EQUIPMENT OPERATION

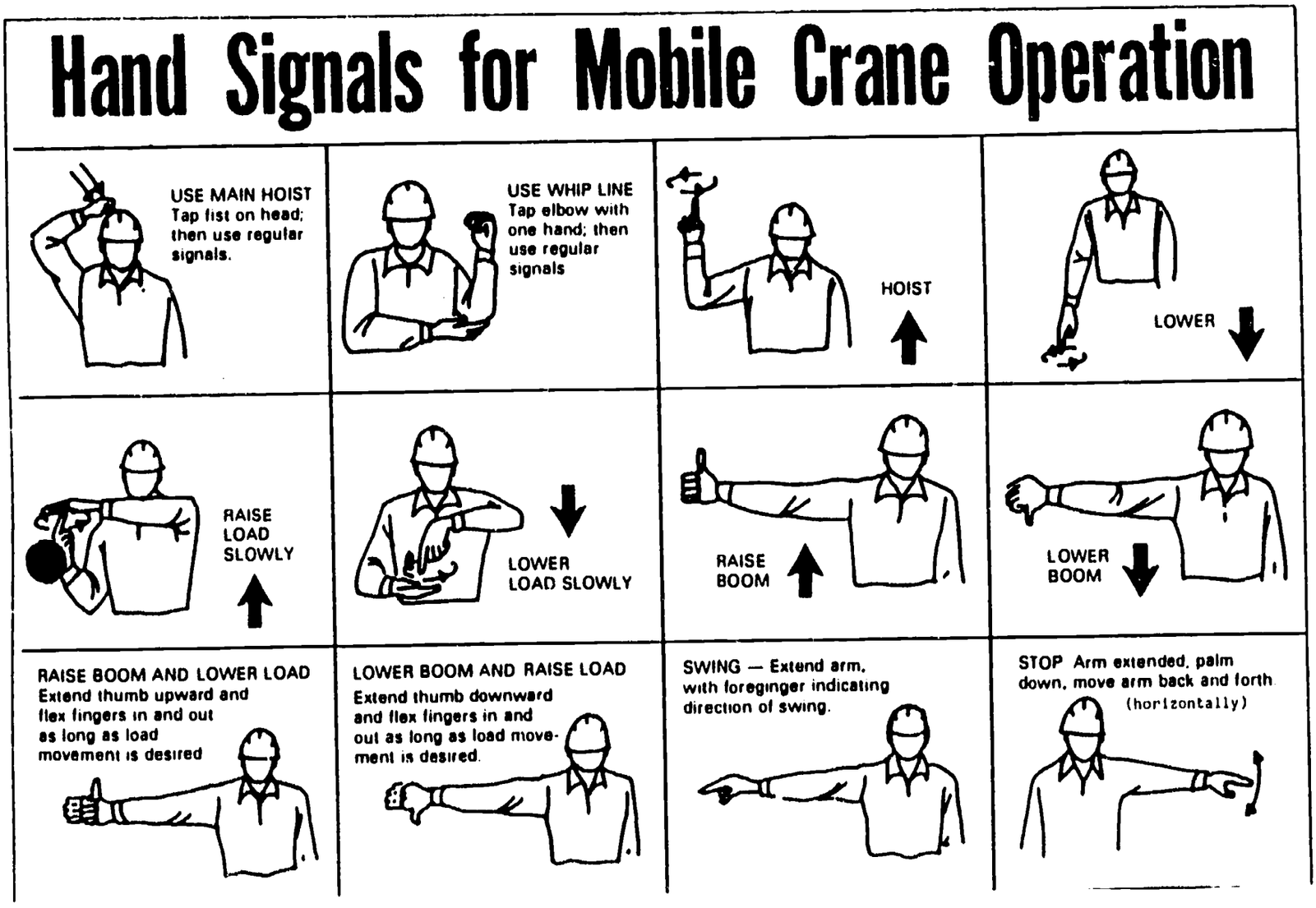

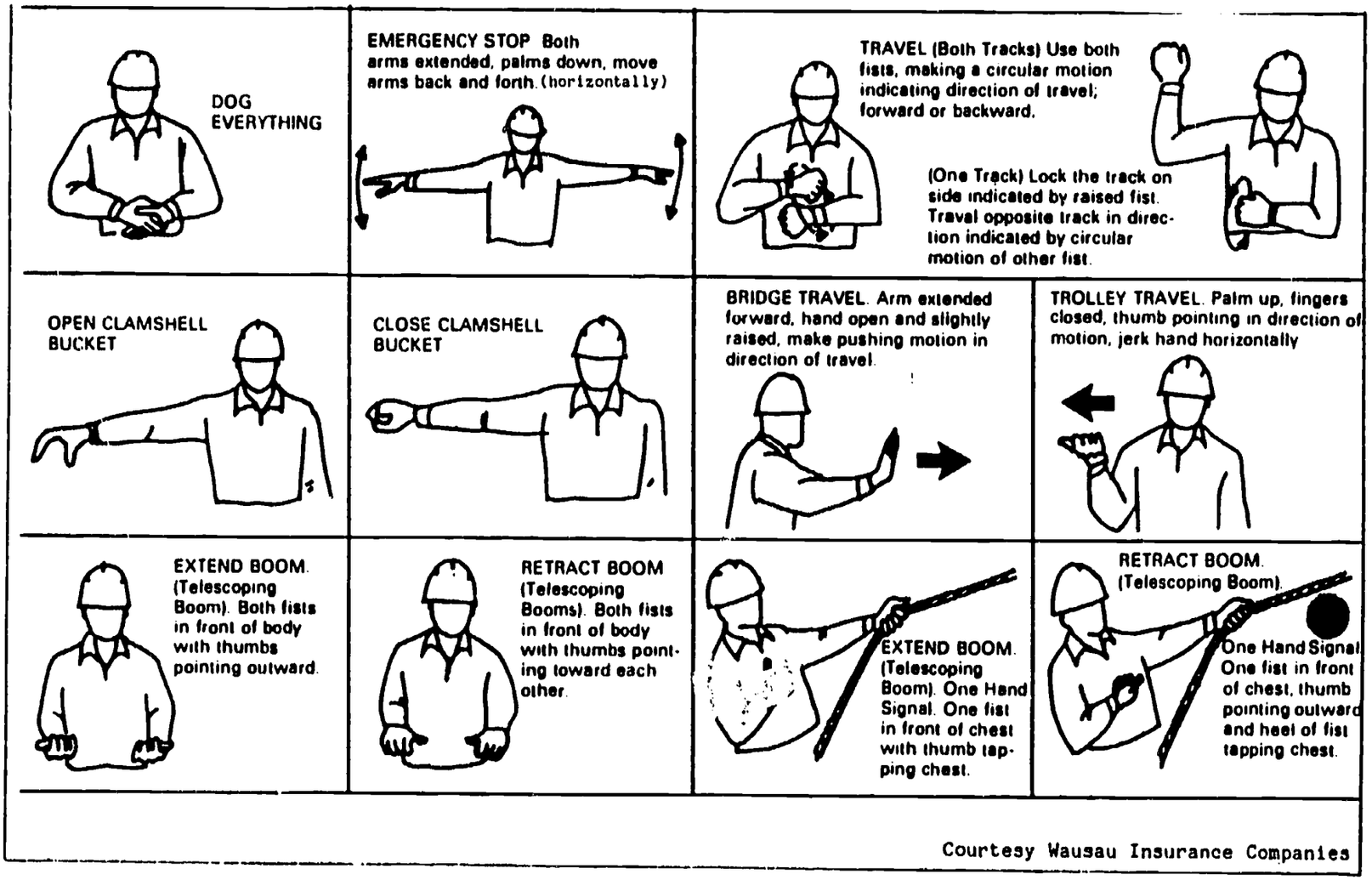

Courtesy Wausau Insurance Companies

ORAL QUIZ

HAND SIGNALS

Directions: Your instructor will demonstrate several hand signals for Boom Equipment operation. In the space provided, indicate what the hand signal means.

1. _____

_____

2. _____

_____

3. _____

_____

4. _____

_____

5. _____

_____

6. _____

_____

7. _____

_____

8. _____

_____

9. _____

_____

10. _____

_____

ASSIGNMENT SHEET

ESTIMATING WEIGHTS

Directions: Estimate the weight of the following items to be moved.

1. What is the approximate weight of a 4′ X 8′ steel sheet 2" thick?

2. What is the approximate weight of a rectangular oil reservoir 12′ X 12′ X 4′, constructed of 1/2" steel?

3. What is the approximate weight of a solid steel fan shaft 15" in diameter and 22 feet long?

4. What is the approximate weight of tin plate, 1/2 inch thick each, four feet long and eight feet wide.

5. How much weight will the following eye to eye chain slings safely lift?

A. 3/8"

B. 1/2"

C. 5/8"

D. 3/4"

E. 7/8"

6. What size chain sling is required to lift this test weight?

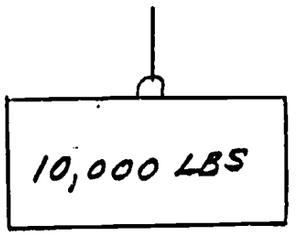

7. What size chain slings are required for the following 2 point pick?

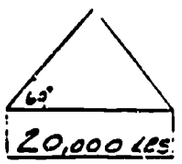

ASSIGNMENT SHEET

RIGGING LAB

Your instructor will describe a situation that requires rigging. Determine the rigging software you will need, how you will get the job done, the safety considerations, and the number of people needed.

- Don't under rig
- Don't seriously over rig
- Be neat and concise
- Be original and solve this by yourself

1. List all of the rigging you will need. Include chokers, shackles, cable clamps, etc.

_____

_____

_____

_____

_____

_____

2. Describe (using illustrations or a written explanation) how you will get the job done.

3. List necessary safety considerations for the project.

_____

_____

_____

_____

_____

_____

4. How many people will you need to get the job done?

_____

INFORMATION SHEET

RIGGING

Rigging is basically the use of rope and chain in various tackle and lever combinations to lift and move heavy loads. Hoisting procedures may vary from lifting heavy machinery to rooftops by crane or helicopter to erecting temporary structures such as scaffolds.

The most important consideration in rigging or hoisting is personal safety. With heavy loads, accidents happen very quickly.

Before you can start a job, however, you must calculate the weight of the loads you will handle.

ESTIMATING WEIGHT

If possible, obtain the weight of the load to be handled by checking shipping papers, manufacturer's catalogs, or serial plates. If the information is not available, you will need to estimate the weight of the load.

1. Start by determining the volume of the load. See the tables below.

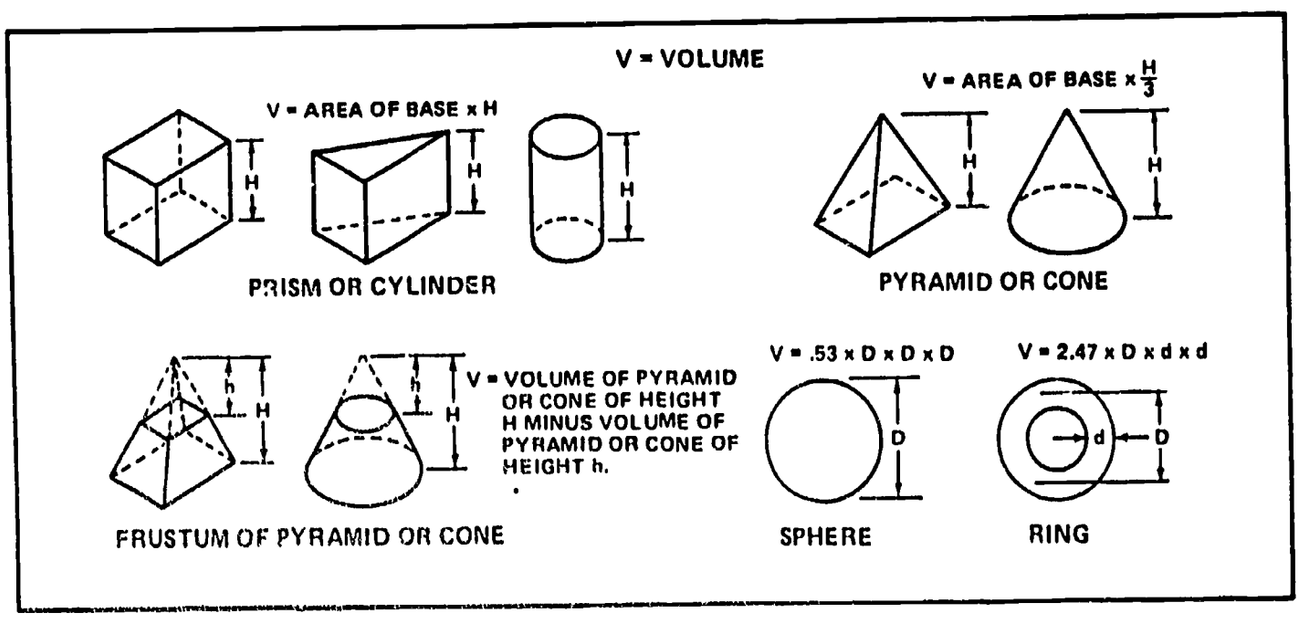

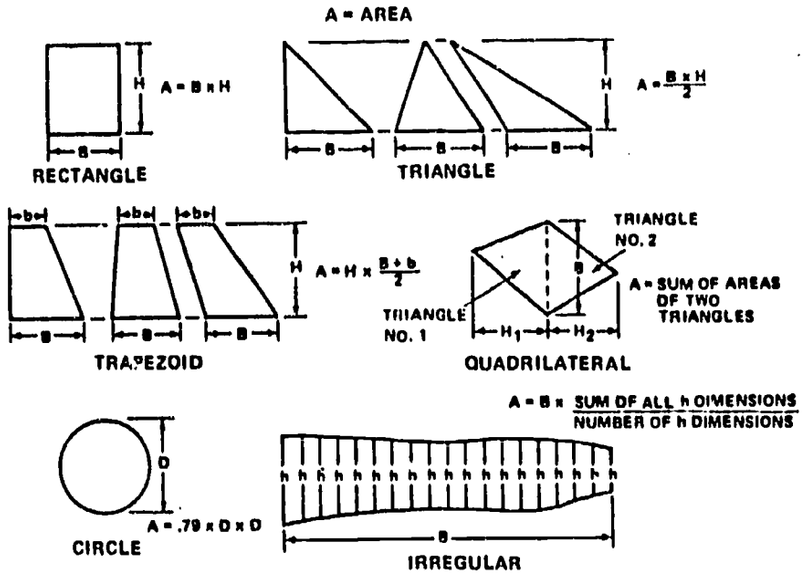

2. After finding the object's volume, find the weight of a unit volume of its content material from the table below or an engineering handbook.

Weights of Common Materials

Name of Metal	Weight lbs/cu ft	Name of Material	Weight lbs/cu ft
Aluminum	166	Bluestone	160
Antimony	418	Brick, pressed	150
Bismuth	613	Brick, common	125
Brass, cast	504	Cement, Portland (packed)	100–120
Brass, rolled	523	Cement, Portland (loose)	70–90
Copper, cast	550	Cement, slag (packed)	80–100
Copper, rolled	555	Cement, slag (loose)	55–75
Gold, 24-carat	1204	Chalk	156
Iron, cast	450	Charcoal	15–34
Iron, wrought	480	Cinder concrete	110
Lead, commercial	712	Clay, ordinary	120–150
Mercury, 60° F	846	Coal, hard, solid	93.5
Silver	655	Coal, hard, broken	54
Steel	490	Coal, soft, solid	84
Tin, cast	458	Coal, soft, broken	54
Zinc	437	Coke, loose	23–32
		Concrete, or stone	140–155
Name of Wood	**Weight lbs/cu ft**	Earth, rammed	90–100
Ash	35	Granite	165–170
Beech	37	Gravel	117–125
Birch	40	Lime, quick (ground loose)	53
Cedar	22	Limestone	170
Cherry	30	Marble	164
Chestnut	26	Plaster of paris (cast)	80
Cork	15	Sand	90–106
Cypress	27	Sandstone	151
Ebony	71	Shale	162
Elm	30	Slate	160–180
Fir, Balsam	22	Terra-cotta	110
Hemlock	31	Trap rock	170

3. Multiply the volume of the object by the weight of the material per unit volume.

4. If the object has a complex shape, divide it into its geometrical parts. Then find the volume and weight of each part's contents and add the weights together.

5. If an object is a complex solid that has holes in it, first calculate the object's volume as a solid. Then subtract the volume of the holes.

SIMPLE RIGGING MACHINES

Most complex rigging machines are made from one or more of the following: the lever, the wheel and axle, the pulley, the inclined plane, the screw and the wedge.

LEVER	The lever can be used to multiply force or motion, such as to raise, pry or dislodge an object.
WHEEL and AXLE	The wheel and axle lifting principle is the basis for all weight lifting machinery, such as cranes, chain hoists, and elevators.
PULLEYS	The pulley is a wheel that turns on an axle mounted in a frame. There are both fixed and movable pulleys.
INCLINED PLANE	The inclined plane can be used to haul a load on rollers up a ramp, or up skids onto a truck.
SCREW	The screw is something like an inclined plane wound in the form of a screw. The screw jack, which is used to lift heavy machinery, is an example of this machine.
WEDGE	A wedge serves as holding or separating devices in tools or mechanical equipment. It can be used to raise a heavy object by driving the wedge between the base of the object and the surface it rests upon.

SLINGS

A sling is a length of rope or chain what attached to the load to be lifted. Slings are made of a variety of materials:

Manilla Rope Slings	Suitable for lifting light loads. Can also be used for some heavy jobs to handle easily scratched materials.
Synthetic Slings	Stronger than manilla slings and less likely to deteriorate. They can grip and hold a load more securely than manilla rope slings.
Wire Slings	Suitable for heavy-duty hoisting jobs. Stronger than any fiber sling. Kinking can ruin a wire rope and result in sling failure. Thus make sure that a wire rope does not form kinks as it takes the strain when lifting a load.
Chain Slings	Have limited use because of their weight. The main use is to hoist rails, beams, angles and pipe. Always place pads between the chain and the load to make a better gripping surface. Before lifting, make sure the chain is free from twists and kinks. Also make sure the load is properly seated in the hook (not on the point) and that the chain is free from nicks or other damage.

DERRICKS OR STATIONARY CRANES

A-Frame Derrick	This crane gets its name from the shape of its main support. The main support is triangular and with the base resting on the floor. This triangular support frame looks like the letter A. A frames for light loads are made from wood, but heavy duty A-frames are made from steel.
Gin Pole Derricks	Gin poles are single pole units with one end firmly secured at the base to prevent movement. Use gin poles only for light working loads. The gin pole is a good choice when you need a temporary hoist to raise and lower a number of light loads.

CRANES

Jib Cranes

The jib crane can be used to do any job that you can do with any of the derricks listed previously. You can also use it to move a load horizontally to or from the base and end of the boom. Most jib cranes operate on electric power. However, you can find small hand-operated jib cranes.

Traveling Cranes

The traveling crane is an overhead crane. Mobile or traveling cranes are very useful for moving loads inside buildings. Traveling cranes can raise loads and transport them to other locations. The traveling crane operates on tracks suspended from the ceiling or top portion of the walls in a building.

Traveling cranes allow movement in three directions. All traveling cranes permit the load to be lifted vertically from a resting position. The lifting tackle gives you the vertical direction of movement. This movement alone is quite useful for many jobs.

Gantry Cranes

Most gantry cranes are much larger than overhead traveling cranes. Their large size makes them more useful outside of buildings. Gantry cranes also move on tracks, but their tracks are on the ground rather than suspended overhead.

Locomotive Cranes

Locomotive cranes operate on standard railroad track systems. Some of these units are self-propelled. Others are coupled directly to other rail cars for movement to the work area.

The boom on a locomotive crane is about 45 to 50 feet long. You must be careful in lifting heavy objects with the boom at a 90 degree angle to the track. Large lift angles can cause the crane to tip over. Use outriggers if it is necessary to work at large lift angles.

Truck-Mounted Cranes	The truck-mounted crane is much like the locomotive crane. However, truck-mounted cranes are more flexible. You can take a truck crane almost anywhere. The truck crane can work in almost any area where the ground will support it.

CHAIN HOISTS

Chain hoists are the most widely used devices for lifting loads. They usually cost less than other types of hoisting equipment. Chain hoists are dependable and usually portable. They are standard equipment in almost every shop.

Differential	Differential hoists are the simplest type of chain hoist. They are usually less expensive than other types for any given capacity. This hoist is made with two sheaves on the upper block and one on the lower, or working block. The chain is a one-piece unit, or endless chain.
Screw-geared	This type of hoist uses two separate chains. One is an endless chain. The chain drives a single sheave with pockets that fit the chain. As this sheave turns, it drives a worm and gear arrangement which furnishes the power to raise or lower the load chain. The load chain is fitted at one end with a hook connected to the load.
Spur-geared	This is the most efficient type of hoist. It is also the most expensive. This hoist uses an endless chain to drive a pocketed sheave.
Come-along	The come-along is another type of chain hoist, it uses a ratchet operated by a lever rather than a pocketed sheave. The load chain is regular or roller chain. You can use the come-along to lift loads for short distances, but you will find it used more often to stretch wire and cable.

MATERIAL HOISTS OR LIFTS

Material hoists are lifting devices capable of raising and transporting loads of material from one location to another.

Forklift	The forklift is a small 4-wheeled vehicle. The front of the machine has two steel lifting arms or forks. The forks extend outward from a housing. The load lifting mechanism is powered hydraulically.
Pallet Lift	The pallet lift is a type of floor jack. It is useful in moving heavy objects on warehouse pallets from one location to another. These units are manually operated.
Three-wheeled warehouse trucks	Similar to forklifts. However, the working end is fitted with a small boom and lifting hook rather than hydraulic forks. This unit can operate in close areas. It is capable of lifting medium loads and relocating these loads to other points.

SCAFFOLDING

A scaffold is a temporary or semi-permanent elevated platform that has a wood or metal frame with wooden planks to support people and materials at heights above ground level.

Pole Scaffold	This is the simplest and most common type of scaffold. It is made from wood or metal poles positioned 90 degrees to the ground. Horizontal and diagonal braces between the poles prevent swaying movement during working operations. The poles are usually tapered at the bottom end. The scaffold is not connected to a building or other support. Because it stands by itself, we call it an independent scaffold.
Trestle Scaffold	The trestle scaffold is often used for low heights. They use two frames that look like sawhorses. Step levels or rungs are inserted between the frames from their bases to their common support at the top. Planks placed across rungs at equal heights make up

the working area.

Swinging Scaffolds	You can use this type of scaffold for jobs too high for ground-supported scaffolding. A swinging scaffold has a plank platform supported by wire ropes at two points. The ropes suspend from an overhead support to permit raising or lowering the scaffold to the required work level. Always loadtest swinging platforms before you use them. In addition you must wear a safety belt with a strong safety line when working on this scaffold.
Suspended Scaffolds	Used mainly for heavy repair jobs. Most suspended scaffolds have slatted wooden, steel, or metal reinforcement wooden platforms. You can raise or lower suspended scaffolding from the top of a building or a ceiling beam.
Sectional Metal Framework	Sectional metal framework with bracing and cross bracing is the best scaffolding for most maintenance work. Construct the framework so that wheel casters can be installed for easy movement of the scaffold.
Workmen's Lift Platforms	Workmen's lift platforms let workers sit comfortably while working at heights. Hydraulic and mechanical lift devices adjust them upward or downward. Some platforms use a combination of hydraulic and mechanical power. They can be controlled electrically from a platform using a remote switch. The scissor lift is one type of workmen's lift.

INFORMATION SHEET

SAFETY GUIDELINES FOR SCAFFOLDING

8. Toeboards are required whenever people are required to work or pass under or around the scaffold platform.

9. Access must be provided to all work platforms. If it is not available from the structure, access ladders, frames with built-in ladders, or stairways must be provided. When frames with built-in ladders are used, cleated plank or fabricated plank must be used at platform levels to minimize or eliminate platform overhang. Access ladders must extend at least three (3) feet above platforms.

10. Side and end brackets are designed to support people only. Materials should never be placed on cantilevered platforms unless the assembly has been designed to support material loads by a qualified person.

These types of platforms cause overturning and uplift forces which must be compensated for. All frames should be fastened together to prevent uplift and overturning moment compensated for with counterweights or adequate ties.

11. Putlogs must never be used for the storage of materials. They are designed for personnel use only. Special care should be taken when putlogs are used.

a. Putlogs should overhang the support points by at least 6". Use putlogs hangers with bolts **fastened** to support putlogs on frames.

b. Putlog spans of greater than 12' require knee-bracing and lateral support. Contact your Safway dealer.

c. Putlogs used as side or end brackets need special bracing. Contact your Safway dealer.

12. Bridging between towers should not be done with plank or stages unless the assembly is designed by a qualified person and overturning moments have been compensated for.

13. Scaffold should not be used as material hoist towers or for mounting derricks unless the assembly is designed by a qualified person.

14. CHECK THE ERECTED ASSEMBLY BEFORE USE. A qualified person should thoroughly inspect the completed assembly to see that it complies with all safety codes, that nuts and bolts are tightened, that it is level and plumb, that work platforms are fully planked, that guardrails are in place and safe access is provided.

C. Erection of Rolling Scaffolds.

The following **additional** precautions apply to the use of rolling towers:

1. Height of the tower must not exceed four (4) times the minimum base dimension (three (3) times in California). Outrigger frames or outrigger units on both sides of the tower may be used to increase base width dimension when necessary.

2. All casters must be secured to frame legs or screwjacks with a nut and bolt or other secure means. Total weight of tower should not exceed the capacity of the casters.

3. Screwjacks must not be extended more than 12 inches above caster base. Tower must be kept level and plumb at all times.

4. Horizontal/diagonal bracing must be used at the bottom and top of tower and at intermediate levels of 20 feet. Fabricated planks with hooks may replace the top diagonal brace.

5. All frames must be fully cross-braced.

6. Only prefabricated plank or cleated plank should be used.

7. Casters must be locked at all times the scaffold is not being moved.

II. USE OF SCAFFOLDS.

A. All Scaffolds.

1. **Inspect** the scaffold assembly before each use to see that it is assembled correctly, that it is level and plumb, base plates are in firm contact with sills, bracing is in place and connected, platforms are fully planked, guardrails in place, safe access is provided, that it is properly tied and/or guyed and that there are no overhead obstructions or electric lines within 12 feet of the scaffold assembly.

2. Use only the safe means of access that is provided. Do not climb bracing or frames not specifically designed for climbing. If such access is not provided, insist that it be provided.

3. Climb safely!

a. Face the rungs as you climb up or down.

b. Use both hands.

c. Do not try to carry materials while you climb.

d. Be sure of your footing and balance before you let go with your hands. Keep one hand firmly on frame or ladder at all times.

e. Clean shoes and rungs to avoid slipping.

4. DO NOT work on slippery platforms.

5. DO NOT overload platforms with materials.

6. Working heights should not be extended by planking guardrails or by use of boxes or ladders on scaffold platforms.

7. DO NOT remove any component of a completed scaffold assembly except under the supervision of a qualified person. Any component that has been removed should be immediately replaced.

B. Rolling Towers.

All of the above precautions plus:

1. DO NOT RIDE MANUALLY PROPELLED ROLLING SCAFFOLD. NO PERSONNEL SHOULD BE ON THE TOWER WHILE IT IS BEING MOVED.

2. Lock all casters before getting on the tower.

3. Work only within the platform area; do not try to extend overhead work area by reaching out over guardrailing.

4. DO NOT bridge between two rolling towers with plank or stages.

5. Secure all materials before moving scaffold.

6. Be sure floor surface is clear of obstructions or holes before moving scaffold.

7. Be sure there are no overhead obstructions or electric power lines in the path of the rolling scaffold.

8. Rolling towers must only be used on level surfaces.

9. Move rolling towers by pushing at the base level only. DO NOT pull from the top.

Understanding and following these safety guidelines will increase your personal safety and the safety of your fellow workers.

NOTE:

ADDITIONAL INSTRUCTIONS AND INFORMATION ARE AVAILABLE FROM SAFWAY STEEL PRODUCTS REGARDING:

-Erection procedures (Booklet or slide/video)	-Counterweights
-Load capacities	-Fall protection
-Rigging	-Parts identification
	-Engineering assistance

SAFWAY SECTIONAL SCAFFOLDING

SCAFFOLD SAFETY IS EVERYONE'S RESPONSIBILITY!

Everyone's safety depends upon the proper erection and safe use of scaffolding. Inspect your scaffolding before each use to see that the assembly has not been altered and is safe for your use.

WARNING!

SERIOUS INJURY OR DEATH CAN RESULT FROM YOUR FAILURE TO FAMILIARIZE YOURSELF, AND COMPLY WITH ALL APPLICABLE SAFETY REQUIREMENTS OF FEDERAL, STATE AND LOCAL REGULATIONS AND THESE SAFETY GUIDELINES BEFORE ERECTING, USING OR DISMANTLING THIS SCAFFOLD.

SAFETY MUST COME FIRST!

Safway equipment is designed and manufactured with the user in mind. The safety that goes into each piece of equipment, however, cannot offset carelessness on the part of the erector or the user. With this thought in mind, IN ORDER TO PREVENT INJURY TO THE USERS of Safway equipment, we urge you to follow these safety guidelines.

I. ERECTION OF SCAFFOLDING.

A. Prior to Erection - All Scaffold Assemblies.

1. Jobsite should be inspected to determine ground conditions or strength of supporting structure, and for proximity of electric power lines, overhead obstructions, wind conditions, the need for overhead protection or weather protection coverings. These conditions must be evaluated and adequately provided for.

2. Frame spacing and mud sill size can only be determined after the total loads to be imposed on the scaffold and the strength of the supporting soil or structure are calculated and considered. This analysis must be done by a qualified person. Load carrying information on Safway components is available from your Safway dealer.

3. Stationary scaffolds over 125 feet in height and rolling scaffolds over 60 feet in height must be designed by a professional engineer.

4. All equipment must be inspected to see that it is in good condition and is serviceable. Damaged or deteriorated equipment should not be used.

5. Wood plank should be inspected to see that it is graded for scaffold use, is sound and in good condition, straight grained, free from saw cuts, splits and holes.

CAUTION: Not all species and grades of lumber can be used as scaffold plank. Wood planks used for scaffolding must be specifically graded for scaffold use by an approved grading agency.

6. The scaffold assembly must be designed to comply with local, State and Federal safety requirements.

B. Erection of Fixed Scaffold.

1. Scaffold must be erected, moved, or disassembled only under the supervision of qualified persons. Hard hats must be worn by all persons erecting, moving, dismantling or using scaffolding.

2. Mud sills must be of adequate size to distribute the loads on the scaffolding to the soil or supporting structure. Special care is needed when scaffolding is to be erected on fill or other soft ground or on frozen ground. Sills should be level and in full contact with the supporting surface.

3. Base plates or screwjacks with base plates must be in firm contact with both the sills and the legs of the scaffolding. Compensate for uneven ground with screwjacks with base plates. DO NOT USE unstable objects such as blocks, loose bricks, etc.

4. Plumb and level scaffold until connections can be made with ease. Do not force members to fit. Be sure scaffold stays level and plumb as erection progresses.

5. Ties, guys, bracing and/or outriggers may be needed to assure a safe stable scaffold assembly. The height of the scaffold in relation to the minimum base width, wind loads, the use of brackets or cantilevered platforms and imposed scaffold loads determines the need for stability bracing. The following general guides are minimum requirements.

a. Federal OSHA requires that scaffolding must always be secured when the height of the scaffold exceeds four (4) times the minimum base width. (California requires stability bracing when the scaffold height exceeds three (3) times the minimum base width.)

b. The bottom tie must be placed no higher than four (4) times the minimum base width and every 26 feet vertically thereafter. Ties should be placed as close to the top of the scaffold as possible.

c. Vertical ties should be placed at the ends of scaffold runs and at no more than 30 feet horizontal intervals in between.

d. Ties should be installed as the erection progresses and not removed until scaffold is dismantled to that height.

e. Side brackets, cantilevered platforms, pulleys or hoist arms and wind conditions introduce overturning and uplift forces that must be considered and compensated for. These assemblies may require additional bracing, tieing or guying.

f. Circular scaffolds erected completely around or within a structure may be restrained from tipping by the use of "stand off" bracing members.

g. Each leg of a free standing tower must be guyed at the intervals outlined above or otherwise restrained to prevent tipping or overturning.

6. Work platforms must be fully planked either with scaffold graded solid sawn or laminated plank, in good sound condition, or with fabricated platforms in good condition.

a. Each plank must overlap the support by a minimum of 6 inches or be cleated, i.e. 8 foot planks on 7 foot spans must be cleated.

b. Plank should not extend beyond the support by more than 18". Such overhangs should be separated from the work platform by guard-railing so that they cannot be walked on.

c. Plank on continuous runs must extend over the supports and overlap each other by at least 12 inches.

d. Spans of full thickness, 2 inch by 10 inch scaffold grade planks, should never exceed 10 feet. Loads on plank should be evenly distributed and not exceed the allowable loads for type of plank being used. No more than one person should stand on an individual plank at one time.

e. Planks and/or platforms should be secured to scaffolding when necessary to prevent uplift or displacement because of high winds or other job conditions.

7. Guardrails must be used on all open sides and ends of scaffold platforms. Both top and midrails are required. Local codes specify the minimum heights where guardrails are required. Use at lower heights if falls can cause injury.

INSTALLATION

INSTALLATION

COMPETENCY:

Correctly install completed project.

OBJECTIVES:

1. Analyze safety limitations.
2. List requirements for a safe installation site.
3. Summarize site specifications needed before installation can occur.
4. Outline the steps for moving plant equipment to the point of installation.
5. Identify various equipment needed for a particular project.
6. Demonstrate proper procedure for assembling and disassembling various pieces of equipment.
7. Demonstrate methods of properly installing hangers.
8. Summarize the process used to obtain a welding and burning permit.
9. Outline the steps used to set up a fire watch.
10. Discuss airflow testing, adjusting and balancing.
11. List standards for completing a job professionally.
12. Follow a blueprint.
13. Have the responsible party give their approval of the final project.

LEARNING ACTIVITIES:

1. READ "Preventing Machine Installation Problems" from Manufacturing Engineering, April, 1980 and COMPLETE the assignment sheet.

2. PARTICIPATE in class lectures and discussions.

3. WATCH your instructor properly install a sheet metal product.

4. COMPLETE the Installation assignment sheet.

APPLICATIONS:

1. Move plant equipment to the point of installation.
2. Assemble appropriate equipment needed for installing a product.
3. Install hangers.
4. Obtain a welding permit.
5. Obtain a burning permit.

6. Set up a fire watch.

EVALUATION/CHECK OUT:

1. Submit your "Preventing Machine Installation Problems" assignment sheet.
2. Submit the completed Installation assignment sheet.
3. Submit the completed application checklist.

ASSIGNMENT SHEET

PREVENTING MACHINE INSTALLATION PROBLEMS

Reference: The article, "Preventing Machinery and Installation Problems."

1. What are the three problems that can develop from improper machinery installation?

_____

_____

_____

2. What do shock and vibration isolation have to do with determining installation required?

_____

_____

_____

True or False:

_____ 3. The foundation must become part of the structure on a support critical machine.

_____ 4. Isolating a support critical machine requires isolating the foundation as well.

_____ 5. Local soil conditions must be considered in foundation design.

_____ 6. It is perfectly acceptable to mount parts of a large machine on separate foundations.

_____ 7. A lathe 36" between centers can be installed directly to the floor with anchors.

Matching:

_____ 8. Anchor bolts and shims	A. Cork, rubber, felt, etc.
_____ 9. Leveling wedges	B. Reduces transmission of vibration and noise
_____ 10. Anchor bolts and grout	C. Provide a better connection than shim packs or leveling screws
_____ 11. Isolation material	D. Most rigid machine to foundation connection
_____ 12. Isolated inertia block	E. Provide a moderately rigid connection between foundation machinery

ASSIGNMENT SHEET

INSTALL SHEET METAL PRODUCTS

Your instructor will give you four examples of completed sheet metal products that need to be installed. In groups of four, brainstorm various solutions to arrive at appropriate installation methods for that product. Record your recommended solution on the following chart.

DESCRIPTION OF PRODUCT	EQUIPMENT NEEDED TO INSTALL PRODUCT	PROCEDURE USED FOR INSTALLATION
1.		
2.		

DESCRIPTION OF PRODUCT	EQUIPMENT NEEDED TO INSTALL PRODUCT	PROCEDURE USED FOR INSTALLATION
3.		
4.		

REPAIR

712

REPAIR

COMPETENCY:

Repair or replace damaged sheet metal products.

OBJECTIVES:

1. Recognize the need for repairs.
2. Assess degree of damage.
3. Determine if the repair should be temporary or permanent.
4. Evaluate the type of repair or replacement needed.
5. Describe how to repair the damage.
6. Discuss repair with journeyman or other supervisor.

LEARNING ACTIVITIES:

1. PARTICIPATE in class lectures and discussion on repair.

2. BRING IN a sheet metal product from your workplace that needs repair. Working with another student, discuss the type of repair needed. In a class presentation, summarize the methods used to repair the damage. If a sheet metal product is not available, provide a sketch of a damaged piece.

3. COMPLETE the Sheet Metal Repair assignment sheet.

4. COMPLETE the Repair Observation assignment sheet.

5. COMPLETE the Assessment of Repair and Recommended Action assignment sheet.

APPLICATIONS:

1. Repair ductwork.
2. Replace a rusted guard.
3. Examine a damaged exhaust system. Determine whether it should be repaired or replaced.
4. Replace a worn shield.

EVALUATION/CHECK OUT:

1. Submit your Sheet Metal Repair assignment sheet.
2. Submit your Repair Observation assignment sheet.
3. Submit your Assessment of Repair and Recommended Action assignment sheet.
4. Submit your checklist of applications.

ASSIGNMENT SHEET

SHEET METAL REPAIR

List four sheet metal products you have repaired. Summarize the steps you took in repairing the products. Meet with other apprentices in your class and discuss the action you took to complete the repair and why. Record other ideas for repairing similar product in the future.

PRODUCT NEEDING REPAIR AND ASSESSMENT OF DAMAGE

	PRODUCT	DAMAGE
1.	_____	_____
		_____
		_____

DESCRIPTION OF REPAIR

_____

_____

_____

	PRODUCT	DAMAGE
2.	_____	_____
		_____
		_____

DESCRIPTION OF REPAIR

_____

_____

_____

PRODUCT DAMAGE

3. _____ _____

_____

_____

DESCRIPTION OF REPAIR

_____

_____

_____

PRODUCT DAMAGE

4. _____ _____

_____

_____

DESCRIPTION OF REPAIR

_____

_____

_____

ASSIGNMENT SHEET

REPAIR OBSERVATION

Study two repair jobs that have been accomplished at your workplace. Talk with your journeyman about the type of damage that was present and the methods used for repair. On the following lines identify the damage, summarize the methods used for repair, and list the reasons why they were used. Be prepared to present the information to the class.

1. _____

2. _____

ASSIGNMENT SHEET

ASSESSMENT OF REPAIR AND RECOMMENDED ACTION

Your instructor will give you three examples of sheet metal products that need repair. Study the examples and complete the following chart.

ASSESSMENT OF DAMAGE	SHOULD IT BE REPLACED OR REPAIRED?	TYPE OF REPAIR NEEDED	PROCEDURE FOR REPAIR
1.			
2.			

ASSESSMENT OF DAMAGE	SHOULD IT BE REPLACED OR REPAIRED?	TYPE OF REPAIR NEEDED	PROCEDURE FOR REPAIR
3.			