DOCUMENT RESUME

ED 330 839 CE 057 552

TITLE	Development of Articulated Competency-Based Curriculum in Computer Assisted/Computer Integrated Manufacturing Technology. Final Report.
INSTITUTION	Luzerne County Community Coll., Nanticoke, Pa.
SPONS AGENCY	Pennsylvania State Dept. of Education, Harrisburg. Bureau of Vocational and Adult Education.
PUB DATE	30 Sep 88
CONTRACT	85-8025
NOTE	180p.; For an earlier report, see ED 288 019.
PUB TYPE	Guides - Classroom Use - Teaching Guides (For Teacher) (052)
EDRS PRICE	MF01/PC08 Plus Postage.
DESCRIPTORS	*Articulation (Education); Community Colleges; *Competency Based Education; *Computer Assisted Manufacturing; Computer Software; Course Content; *Curriculum Development; Equipment; Regional Schools; Secondary Education; Two Year Colleges; *Vocational Schools
IDENTIFIERS	*Computer Integrated Manufacturing; Luzerne County Community College PA

ABSTRACT

The project described in this report was conducted at the Community College of Luzerne County (Pennsylvania) to develop, in conjunction with area vocational-technical schools, the second year of a competency-based curriculum in computer-integrated manufacturing (CIM). During the project, a task force of teachers from the area schools and the college developed courses and competencies for both secondary and postsecondary CIM programs. The task force also developed materials and equipment lists, supervised the layout of the CIM laboratory in a new Advanced Technology Center, created a competency-based catalog of proposed courses, and implemented the program. Most of this document consists of the curriculum materials, including competencies for 10 CIM courses, recommendations for equipment/software selection, and recommendations for articulation. Attachments include a list of task force members, task force data and recommendations, the Advanced Technology Center brochure, a program brochure, and specifications for seven pieces of equipment. (KC)

PA88CD32

FINAL REPORT

DEVELOPMENT OF ARTICULATED COMPETENCY-BASED CURRICULUM IN COMPUTER ASSISTED/COMPUTER INTEGRATED MANUFACTURING TECHNOLOGY

CONTRACT NUMBER [redacted]

Wesley E. Franklin, Project Director

Community College of Luzerne County

Nanticoke, Pennsylvania 18634

September 30, 1988

PENNSYLVANIA DEPARTMENT OF EDUCATION
BUREAU OF VOCATIONAL AND ADULT EDUCATION
CURRICULUM AND PERSONNEL DEVELOPMENT SECTION

TABLE OF CONTENTS

SECTION IV -- ATTACHMENTS

Luzerne County Community College
PROSPECT STREET AND MIDDLE ROAD ● NANTICOKE, PENNSYLVANIA 18634

ACKNOWLEDGEMENTS

The completion of this curriculum development project was made possible through the hard work, diligence, and cooperation of the following, listed in alphabetical order:

Regina Antonini	Director, Community-Based and Institutional-Based Special Programs and Task Force Coordinator
Elaine Brown	Assistant to the Project Director
Patrick J. Santacroce	Executive Director, Institute for Developmental Educational Activities
Elizabeth Yeager	Coordinator, Customized Job Training and Task Force Coordinator
Stephen Yokimishyn	Director, BIE Partnership

The work of the Curriculum Development Task Force (see Attachment #1 for a list of their names and institutions) also merits special recognition. Their cooperation and expertise have greatly facilitated the secondary/post-secondary partnership and articulation that have resulted from this project.

A special note of appreciation is due Mr. Thomas J. Moran, President of the Community College of Luzerne County. His interest and support were very important in pursuing the project to a successful completion.

Wesley E. Franklin
Project Director and
Executive Director, Advanced Technology Center
September 30, 1988

S E C T I O N I:

A B S T R A C T

A N D

F I N A N C I A L S U M M A R Y

ABSTRACT

85-8025: Development of Articulated Competency-Based Curriculum in Computer Assisted/Computer Integrated Manufacturing.

Wesley E. Franklin
Community College of Luzerne County
Prospect St. & Middle Road
Nanticoke, PA 18634

$37,306 Federal
7/1/87 to 6/30/88

The purpose of this project was to develop, in cooperation with area vocational-technical schools, the second year of a competency-based curriculum in computer-integrated manufacturing(CIM).

OBJECTIVES

1. Develop courses and competencies for second year of program, both secondary and post-secondary.

2. Develop equipment lists and instructional materials for second year, both secondary and post-secondary.

3. Review all developed materials and lists (by Task Force).

4. Layout CIM lab in new Advanced Technology Center.

5. Integrate proposed courses and competencies, using V-Tecs model, into one unified competency-based catalog.

6. Prepare and review first draft of final report.

7. Publish and disseminate final report.

OUTCOMES

1. Task force membership was continued from previous year, with addition of four science and math teachers from four area school districts and several faculty from LCCC science and engineering technology departments. Task force met periodically and prepared advanced placement competency testing, reviewed proposed textbooks, and reviewed proposed second year program.

2. New staff for new programs were incorporated into task force and prepared detailed equipment specifications for use in competitive bid process.

3. Construction of new advanced technology center was monitored, and task force along with secondary school guidance counselors toured new facility in April and May, 1988.

4. Changes in lab layouts and specifications were made as a result of task force recommendations.

5. Second year of competency-based curriculum was approved by task force, College Senate, and President Moran, and included in 1988-89 College Catalog.

6. Program was implemented and began accepting enrollments for the 1988 Fall Semester.

7. Final report was completed and distributed to task force, AVTS's, private sector participants, and appropriate agencies.

FINANCIAL SUMMARY

LUZERNE COUNTY COMMUNITY COLLEGE
COMPUTER ASSISTED/COMPUTER INTEGRATED MANUFACTURING PROGRAM
CURRICULUM MATERIALS DEVELOPMENT
1987-1988

COMPUTER ASSISTED/COMPUTER INTEGRATED MANUFACTURING

	APPROVED	EXPENDED	BALANCE
SALARIES	- 19363.00	11258.47	8104.53
BENEFITS	- 6777.00	3049.29	3727.71
HONORARIA	- 6400.00	13641.66	-7241.66
SUPPLIES/ COMM	- 400.00	318.89	81.11
PRINTING	- 500.00	426.15	73.85
TRAVEL	- 426.00	945.18	- 519.18
AUDIT	- 677.00	0.00	677.00
INDIRECT COST	- 2763.00	2371.17	391.83
TOTAL	- 37306.00	32010.81	5295.199

SECTION II:

PROJECT APPROACH/ METHODOLOGY

METHODOLOGY

This curriculum materials development project began in 1986-87 and continued in 1987-83 with the assistance of a task force whose membership included representatives from the five area vocational-technical schools: Hazleton, Lackawanna, Monroe, West Side and Wilkes-Barre (see ATTACHMENT #1). In the initial grant proposal, the stated plan was to use vo-tech faculty (task force) to assist in curriculum development and in identification of equipment and facilities needed for the program. After several meetings with the task force during the fall semester, this approach did not appear to be feasible because of time and expertise limitations -- most of the members of the task force taught evening courses as well as teaching full-time during the day. Also, because the proposed program is a new technology, there was a significant amount of research that had to be done, both for the college and the task force.

For these reasons, it was decided to use expertise already available, namely consultants, and have the task force function in a review/reaction mode once there were materials/reports from the consultant to consider. This way, the task force's knowledge of the local educational and industrial training requirements could be used to make appropriate changes in the consultant's reports and recommendations so the proposed program would be in line with the needs of the college's service area. Also, representatives of the college's engineering and science departments, administration, and

from the private sector were able to participate in the process and provided valuable input throughout. This process was continued during 1987-88.

ATTACHMENT #2 summarizes the work of the Task Force regarding program changes, textbook reviews, and advanced placement testing for certain first-year courses. Because this task force was integrated with other task forces for certain aspects of the curriculum development project, this attachment presents an integrated perspective.

Also, one of the results of the task force's review process was the recommendation that the best articulation procedure would be one which provided advanced placement for competencies and/or knowledge rather than attempt to integrate a secondary with a post-secondary curriculum, trying to fit the student in wherever he or she happened to be on the competency continuum. The consultant agreed with this recommendation and included a separate section on articulation in his report. This report is included under SECTION III, which provides a total program report.

ANALYSIS/EVALUATION

The proposed second-year program, along with a revised equipment and facilities plan, were first evaluated by the task force. The task force made several recommendations to the consultants, which were incorporated into the final documents. These documents were then reviewed and approved by the appropriate college administrators, the College Senate, and President Moran.

DISSEMINATION

Copies of the final report will be distributed to the following:

Bureau of Vocational and Adult Education, PDE

Area Vocational-Technical Schools

Private Sector participants

Members of Task Force

Consultants

Ben Franklin Partnership

Pennsylvania Economic Development Partnership

Economic Development Council of Northeastern Pennsylvania

This is the final year of a two-year project and includes the complete curricular program. This program has been implemented in the college's new Advanced Technology Center, see ATTACHMENT II, for the 1988 Fall Semester.

SECTION III:

PROJECT SUMMARY

COMPUTER INTEGRATED MANUFACTURING/
COMPUTER-ASSISTED MANUFACTURING (CIM)
CURRICULUM

(Two Year Program of Study)

LUZERNE COUNTY COMMUNITY COLLEGE
Nanticoke, Pennsyivania 18634

June, 1988

TABLE OF CONTENTS

COMPUTER INTEGRATED MANUFACTURING/
COMPUTER-ASSISTED MANUFACTURING
CURRICULUM

General Business/Industry Trends

The application of Computer-Assisted Manufacturing (CAM) has, until recent years, been limited to those companies which have had the capital monies available to invest in a mainframe computer; or, the operating monies available to purchase shared-time use of mainframe computers.

With the advent of the personal computer (PC), and the computer networking technology associated therewith; as well as the incidental reduction in investment expenses associated with the same, CAM technology is now available for even the smallest business. For example, a small but powerful professional PC can be purchased for about $5,000. Likewise, many reputable basic software computer-assisted drafting (CAD) and computer-assisted manufacturing (CAM) packages are selling for about $3,000-$5,000. Furthermore, an integrated Computerized Numerical Control (CNC) programming, order service, estimating, and shop scheduling software package may be readily acquired, from several sources, for about $30,000.

Industry forecasters' predictions that more than 65% of the discrete-part manufacturing establishments in the United States would have been applying some form of CAM technology by 1986 have been generally overestimated. However, as a result of competitive pressures, and a general awareness of the capabilities of various software packages, as well as the increased availability of software packages, many more businesses are showing interest. These businesses are finding that they must invest in this technology in an effort to retain and expand their market share. As those businesses and industries adopt the technology, a pressing need for individuals possessing the knowledge and skills required to interface with the new hardware, firmware and software is realized.

An informed technological public is already aware of this need and many individuals are seeking to upgrade their skills to remain current with the technological changes taking place within the work-place. Many others are seeking to change careers and enter this field of manufacturing because of its potential and realized growth. And, others are attempting to gain entry-level skills in an effort to secure a position of employment, expecting to advance with companies adopting and implementing this technology.

COMPUTER INTEGRATED MANUFACTURING/ COMPUTER-ASSISTED MANUFACTURING TECHNOLOGY

Recommended Program of Studies Leading to the A.A.S. Degree

The CIM/Computer-Assisted Manufacturing Technology curriculum is designed to provide the student with an introduction to conventional as well as technologically advanced manufacturing processes. The student will become experienced in the use of computers while acquiring a basic understanding of how computer data base information on product design and other specifications can be utilized in the manufacturing and processing of products through automated manufacturing/materials handling operations. Students will use computers and peripheral equipment to produce and anaylze drawings and data. Students will also program, set-up and operate computerized machine tools. Likewise, they will perform activities associated with planning, implementation, and operation of a basic computer integrated manufacturng workcell.

First Semester	Credits
English Composition I ENG 101	3
Technical Math I MAT 111	5
Sketching & Print Interpretation GET 108	2
Manufacturing Processes I GET 121	3
D.C. Electricity IEL 131	4
	17

Second Semester

Technical Math II MAT 112	5
Introduction to Computer Programming GET 234	3
Manufacturing Processes II GET 122	3
Computer Assisted Design I CAD 101	3
CNC Machine Tool Setup/Operation CIM 101	2
	16

Third Semester

Computer Assisted Design II CAD 102	3
Computer Numerical Control Machining I CIM 103	3
Fundamentals of Speech SPE 125	3
Technical Physics I PHY 123	4
Technical Report Writing ENG 261	3
Health/Physical Education HPE	1
	17

Fourth Semester

Computer Numerical Control Machining II CIM 104	3
Computer Integrated Manufacturing Applications/Projects CIM 202	3
Industrial Safety GET 112	1
Social Science Elective	3
Technical Physics II PHY 124	4
Fluid Power Applications ASR 207	3
	17

COMPUTER INTEGRATED MANUFACTURING/ COMPUTER-ASSISTED MANUFACTURING TECHNOLOGY PROGRAM COMPETENCIES

Upon successful completion of the program, the student should be able to:

*** apply mathematics to solve technical problems.

*** identify industrial safety standard requirements for the workplace.

*** communicate effectively with co-workers.

*** demonstrate accident prevention practices and procedures while performing basic operations dealing with conventional and automated machine tool processes.

*** utilize freehand sketching and mechanical drafting instruments, as well as basic and advanced computer-assisted drafting to construct line drawings and create auxiliary, sectional, and three dimensional views of objects.

*** operate a basic computer system performing such functions as: system start-up, programming, shut-down, and file management, as well as plotter and printer operation.

*** solve technical problems utilizing the Basic programming language.

*** program, set-up and operate computerized numericaly controlled milling machines and lathes.

*** solve problems using the theories associated with D.C. Electricity.

*** describe the operational requirements and interact with a computer-integrated/robotic workcell environment.

Course Competencies For:

1. Title: Sketching & Print Interpretation-GET 108

2 credits
One Hour Lecture
Two Hours Laboratory

2. Course Description: This course is designed to provide instruction conducive to the development of knowledge required to interpret mechanical drawings. Likewise, the student will become familiar with symbols relevant to the interpretation of basic graphs, electrical, electronic and piping diagrams. Upon successful completion of this course, the student should be able to:

3. Course Competencies/Behavioral Objectives

Competency 1: Freehand sketch drawings representing the shape, size, features and relationships of common objects and interpret same, including:

1.1 demonstrate the techniques of line creation and the aspects of proportionality required to create a freehand sketch.

1.2 describe the various elements of a completed drawing, noting the considerations that are necessary for proper sketching of pictoral representations of objects, diagrams and schematics.

1.3 utilize templates and basic drafting instruments to create line drawings and sketches.

1.4 interpret basic sketches and drawings.

Competency 2: Apply the rules of geometric construction to portray and interpret information regarding manufactured or fabricated objects.

2.1 identify and interpret the American National Standards Institute's standards for line conventions and notes.

2.2 describe the purpose of each type of line on a drawing.

2.3 demonstrate how geometric elements are combined with construction techniques to describe geometric shapes.

2.4 plan, layout and create sketches.

Competency 3: Utilize the techniques of orthographic projection, multiview, auxiliary, and sectional views to interpret aspects of part shape, size, and configuration, and to clarify part features, including:

3.1 describe the difference between pictorial, multiview, and auxiliary drawings and identify when the use of each is appropriate.

3.2 cite the considerations used to select views for part feature representation.

3.3 describe when the use of sectioning, revolution, and break techniques is warranted.

3.4 select appropriate views and complete multiview sketches of objects.

3.5 define terms associated with projection of views.

3.6 use auxiliary and isometric views of an object to clarify part features and details.

3.7 identify the various types of sectional views and elaborate on the particular circumstances under which each would be used.

Competency 4: Prepare sketches and interpret working drawings to include detailed dimensions, notes, and application of the American National Standards Institute's (ANSI) rules for symbology for geometric tolerancing, including:

4.1 distinguish between detail and assembly drawings and identify the various types of assembly drawings.

4.2 identify and elaborate on the definition, and use of each of the four basic types of the ANSI geometric tolerancing symbols; namely, geometric characteristic, material condition (modifying), feature control frame, and supplementary symbols.

4.3 identify and elaborate on the definition of each of the five types of the ANSI geometric feature tolerances; namely, form, profile, orientation, runout and location.

4.4 use knowledge associated with the construction of working and detailed sketches to interpret drawings of moderate complexity.

Competency 5: Demonstrate the ability to sketch and interpret charts and graphs commonly associated with the processing and manufacturing industries, including:

5.1 construct and utilize common graphs to derive information relevant to the solution of practical problems.

5.2 interpret specific graphs plotted for establishing methods of assuring quality control; namely, Pareto, histogram, normal distribution, scatter diagram, Average and Range ($\bar{x}$ & R) charts, and attribute control charts.

5.3 derive information from graphs and charts in manufacturer's handbooks and technical manuals.

Competency 6: Identify relevant symbols and interpret schematic diagrams of weldments, electrical, electronic and piping systems, including:

6.1 identify various piping symbols in accordance with the ANSI symbol definition.

6.2 identify various electrical symbols in accordance with local and National Electrical Code.

6.3 identify various electronic component symbols and interpret electronic diagrams.

6.4 identify various elements associated with welding symbols -- in accordance with the American Welding Society's symbol standards.

6.5 derive specific information from building riser and wiring prints and schematic diagrams.

Recommended Course Textbook/Workbook

Basic, Intermediate and Advanced, Blueprint Reading Series
Delmar Publishers

Equipment:

(See attached list) to include -- standard drafting room furnishing.

Recommended Course Instructor's Reference Textbooks (SPC Charts):

Basic Manufacturing Processes
Kazanas, H.C. & others
McGraw-Hill, N.Y.

An Introduction to Basic Statistical Process Control
Garrity, Susan M.
Tech Center Courseware Company

Statistical Process Control -- A Guide for Implementation
Bergo, Roger W. & Hart, Thomas H.
ASQC Quality Press, Milwaukee

Statistical Quality Assurance
Guldner, Francis J.
Delmar, N.Y.

Other:

Delmar Publishers and others series of blueprint reading modules

Various manufacturer's handbooks of tables, charts and manuals

SUGGESTED EQUIPMENT AND SUPPLIES

Recommended Equipment for Drafting Laboratory Class Work:

- Plastic or Ruby Eraser
- Irregular (French) Curve Set
- 8-Inch 45° Triangle
- 10-Inch $30^{\circ}/60^{\circ}$ Triangle
- 6-Inch Protractor
- Combination Scale, or Architect's and Engineer's Scales
- Metric Scale
- Pad of Cross-Section Paper, 8-1/2 x 11 inches (1/4" or 1/8" squares)
- Pad of Isometric ruled paper 8 1/2 x 11 inches
- Templates (Circles, Ellipses, Symbols: Welding, Piping, etc.)

Course Competencies For:

1. Title: Manufacturing Processes I GET 121 — 3 credits
Two Hours Lecture
Two Hours Laboratory

2. Course Description: This course is designed to provide the student with theoretical and selected practical exercises dealing with various manufacturing operations and processes. The degree of exposure to individual operations and processes will range from assigned textbook and reference readings to laboratory exercises. Topics of coverage will include inspection, hot and cold forming, welding, fastening, machining, casting, molding, finishing, assembly, material handling, packaging, process flow, statistical process control, planning, economic justification and related topics. Conventional and newer methods of production will be covered with an emphasis of how computerized equipment can be integrated into the factory environment. Field trips to various industries will supplement instruction.

3. Course Competencies/Behavioral Objectives

Competency 1: Describe the various principles, equipment, operations and materials used to produce cast and molded parts, including:

1.1 determine the classification of casting and molding processes, methods, and materials.

1.2 determine the nomenclature associated with cores, molds, patterns, dies, and the function associated therewith.

1.3 determine the procedures involved in the various types of molding processes.

1.4 determine the procedures for melting, pouring and cleaning of cast materials.

Competency 2: Describe, in general terms, the materials forming and removal (machining) processes, including:

2.1 describe the principles of operation for hot, cold and special forming equipment.

2.2 identify the sub-processes and categories comprising the materials forming processes.

2.3 discuss terms such as machinability, chip formation, cutting-tool materials, cutting-tool geometry and coolants.

2.4 describe the basic geometric shapes that can be produced by machine tools and identify the operations/specific machines required to produce a given part feature.

2.5 identify the relatively new category of chipless, special material removal processes.

Competency 3: Describe various fastening, joining and welding processes, including:

3.1 discuss the methods of mechanical fastening, types of fasteners available, and the application for each.

3.2 describe the principles involved with the process of adhesives bonding and the use/dispensing of sealants.

3.3 describe the common types of adhesives available and the limitations associated with each.

3.4 describe the various welding processes and the physical phenomena associated with each.

3.5 describe the inspection and testing techniques commonly associated with welding.

3.6 describe the various solder/brazing processes and discuss related equipment and materials.

3.7 discuss the basic types of joints used in brazing and welding.

Competency 4: Describe the basic principles involved with surface preparation, finishing, painting and plating, including:

4.1 describe the equipment and techniques associated with the in-process cleaning of parts.

4.2 discuss the equipment, processes and techniques associated with part surface coating and finishing.

4.3 identify the reasons for plating a product.

Competency 5: Discuss the aspects of design, planning, common data base creation, sharing of information and organizational structure required for the manufacture/distribution of a product, including:

5.1 discuss, in general terms, the nature, properties and types of materials used in the manufacture of various products.

5.2 describe how modern production methods have evolved with regard to manufacturing systems and automation.

5.3 discuss the concept of product design for ease of manufacture and reduction of costs (in regard to modern production, assembly, materials handling).

Competency 6: Describe the concepts associated with, and the measures taken to perform cost/benefit analysis, justification, and quality control assurance in a processing or manufacturing environment, including:

6.1 discuss the fundamentals of investment analysis, identify types of costs and break-even analyses, and perform a case study.

6.2 describe a general procedure for performing project evaluation and justification.

6.3 describe the role that specifications and standards play in maintaining the quality of products.

6.4 describe the tools/equipment techniques and procedures (with applications), commonly used for inspection purposes and quality control.

6.5 discuss the concepts associated with quality control and assurance techniques.

6.6 discuss the general principles of operation, types of parts capable of being processed, capacities, etc. for various machines/machine tools, packaging, and materials handling equipment found in a modern production environment.

Competency 7: Discuss, in general terms, the various considerations associated with special purpose equipment, mass production, hard and soft automation, assembly techniques, materials handling, storage, and product identification as they relate to the process flow of a product through manufacture, including:

7.1 describe the "special" machinery processes which have evolved over the last forty years.

7.2 describe the terms--primary and secondary operations, and describe the impact of such operations as they relate to the process flow of manufacture and assembly of piece-parts.

7.3 describe the concepts associated with mass production.

7.4 describe the term "dedicated" equipment and give an example of a function that can be performed with such equipment in the manufacture of a part.

7.5 describe the difference between special purpose or dedicated equipment and flexible or reprogrammable equipment.

7.6 describe the role of the control system in automation.

7.7 describe the two basic types of assemblies.

7.8 describe the two methods employed in mechanized assembly of parts.

7.9 describe the concepts involved with designing components for automatic assembly.

Recommended Course Textbook:

Basic Manufacturing Processes
Kazonas, H.C. & others
McGraw-Hill, N.Y.

Recommended Instructor's Reference Textbook:

Materials and Processes in Manufacturing
DeGarmo, E. Paul & others
MacMillan, N.Y.

Course Competencies For:

1. Title: Manufacturing Processes II GET 122 3 Credits
Two Hours Lecture
Two Hours Laboratory

2. Course Description: This course is designed as an introduction to cold chip forming processes and will provide the student with a basic theoretical and practical background in machine tool practices. Such experiences are a prerequisite to the pursuit of a course, or courses, in computer-assisted machining. Topics of coverage will include machine tool operations, cutting fluids, carbide tooling, material speeds and feeds, theory of work holding devices, and the theory for calculating tapers and threads.

3. Course Competencies/Behavioral Objectives

Competency 1: Select and use appropriate precision measuring instruments and layout tools to perform layout, inspections, and quality control operations including: instruments, or layout tools, and cite the operations required to perform layout and inspection work, including:

1.1 identify the best tool for performing specific inspection and/or layout operations.

1.2 demonstrate the ability to use basic layout and inspection tools.

1.3 layout workpieces for machining.

1.4 develop a generalized set of operational procedures to employ in regard to inspecting a specific product.

1.5 apply basic principles and techniques of measurement to perform inspection procedures on completed, and work in-process.

1.6 apply the principles of statistical methods to assure quality.

1.7 outline a procedure to follow in tracing causes of defective work.

1.8 utilize sampling techniques, data recording/analysis, control charts and theories to integrate quality assurance with production methods.

Competency 2: Make informed decisions relevant to the selection of carbide cutters/tool holders, cutter and insert geometry, cutting tool material/grade, speeds and feeds for milling and turning operations, including:

2.1 describe how workpiece material, hardness, and geometry affect cutting tool selection.

2.2 identify and elaborate on the design characteristics for the various types of adapters, cutters, drills, tool holders, boring bars and inserts.

2.3 demonstrate the use of vendor's catalogs for selection of cutters, tool holders, inserts, cutting fluids, speeds and feeds.

2.4 perform speed, feed, and horsepower calculations for carbide tooling.

2.5 prepare operation/tooling sheets for various jobs/machines.

Competency 3: Demonstrate the knowledge, skill and accident prevention awareness required to perform job planning, tool selection, machine setup and operations associated with lathes, including:

3.1 perform routine maintenance and lubrication operations on various lathes.

3.2 cite comparative characteristics of cutting tool/piece-part materials, piece-part geometry, tool holder, and work holding devices in a manner conducive to assuring an efficient setup with safe machining conditions.

3.3 identify and set appropriate speed and feed parameters for machining.

3.4 set-up various work holding devices and securely mount the workpiece.

3.5 set-up and operate various types of lathes and perform various operations commonly associated with lathe work.

Competency 4: Demonstrate the knowledge, skill and accident prevention awareness required to perform job planning, tool selection, machine set-up and operations associated with milling machines, including:

4.1 perform routine maintenance and lubrication operations on various lathes.

4.2 cite comparative characteristics of cutting tool/piece-part geometry, adapters, cutters, and work holding devices in a manner conductive to assuring an efficient set-up with safe machining conditions.

4.3 identify and set appropriate speed and feed parameters for machining.

4.4 set-up various work holding devices and mount the workpiece.

4.5 set-up and operate various types of milling machines, performing various operations commonly associated with mill work.

Competency 5: Demonstrate the knowledge, skill and accident prevention awareness required to perform job planning, tool selection, machine setup and operations associated with grinders and power saws, including:

5.1 perform routine maintenance and lubrication operations on various power saws and grinding machines.

5.2 select and mount specific wheels in regard to workpiece material, operation to be performed and part geometry.

5.3 identify the various styles and types of wheels.

5.4 perform offhand grinding operations on pedestal and tool grinders.

5.5 perform various grinding operations common to the surface grinder.

5.6 identify the most appropriate workholding device for particular jobs and perform set-up of various devices.

5.7 select, prepare and install power saw blades and set-up saws for various operations.

5.8 utilize power saws to perform various machining operations on workpieces.

Competency 6: Demonstrate the knowledge, skills and accident prevention awareness required to perform job planning, tool selection, machine set-up and operations associated with hand tools, work holding devices (jigs and fixtures), and drilling machines, including:

6.1 perform preventative maintenance procedures on drilling machines.

6.2 describe procedures for setting-up jigs and fixtures on various machines.

6.3 select, and use, various hand tools to perform set-up, maintenance, and benchwork operations.

6.4 setup and operate various types of drilling machines, performing varied machining operations.

Competency 7: Utilize tables, charts, hand-held calculators and precision measuring instruments to perform mathematical calculations relevant to tapers, angles, and threads, including:

7.1 define nomenclature associated with tapered and threaded parts.

7.2 utilize tables and graphs to derive information relevant to the solution of practical problems.

7.3 calculate linear dimensions provided on part prints to establish proper "fit" between mating surfaces.

7.4 perform screw thread calculations.

7.5 calculate dimensions associated with angles and tapers for set-up/inspection purposes.

7.6 perform angular, direct, and simple indexing/locating calculations.

Recommended Course Textbook:

Machine Tool Technology

Repp, Victor E., & McCarthy, Willard J.
McKnight, Illinois

Recommended Course Workbook(s):

Machine Tool Technology Study Guides 1 and 2
McKnight, Illinois

Other: Vendor guides to carbide tooling selection

Course Competencies For

1. Title: Computer Assisted Design I CAD 101 3 credits
Two hours Lecture
Two hours Lab

2. Course Description: This course is designed to provide an overview of computer assisted drafting (CAD) and design (CADD). Topics covered in the course will include the benefits of adopting and implementing CAD/D. System hardware and software specifications and options will be covered. Generic and system specific instruction will be provided and students will learn how to operate system component leading to the setting-up, creating, revising and plotting of drawings on a CAD system.

Prerequisite: Sketching & Print Interpretation GET 108

3. Course Competencies/Behavioral Objectives

Competency 1: Define terms and acronyms commonly associated with computer-assisted design, including:

1.1 Differentiate computer-assisted drafting and computer-assisted design.

1.2 Describe the function of and the difference between hardware, software, firmware and database.

1.3 Explain the difference between the terms input and output devices as well as processor, storage device and interactive graphics workstation, and turnkey package.

1.4 Discuss terms such as: bits, byte, word, chip, array processor, bus, port, interrupt, band, networking, stand alone system, database, memory devices, mainframe, minicomputer, microcomputer, host computer, server, user station.

1.5 Identify items such as: cathode ray tube, monitor/display keyboard, disc drive, peripheral diskettes, disk packs, modem, stylus, joystick, thumbwheel, puck, mouse, digitizer, light pen, pen plotter, printer.

1.6 Define terms such as: standard configuration, batch files, asynchronous communications adapter, menu, shell, filename, hard copy, soft copy, hard disk, floppy disk, storage, buffer, scrolling, parametric programs/macros, raster, refresh, resolution, pixal, post processor, math coprocessor, jaggies, cursor, prompt, command, archive, library, alphanumeric, coordinate, password, repaint, rubberband, grid, array, matrix and function key.

1.7 Define and discuss acronyms such as: ROM, RAM, CRT, CPU, CAM, CIM, CAD, CADD, CAE, ALU, COM, 2-D, 2 1/2-D, 3-D, ANSI, ASCII, IGES, ENIAC, MODEM, IC, DOS, MACRO, PC, LAN.

1.8 define and discuss DOS commands such as: directory format, diskcopy, copy, erase and system commands such as: edit, font, mirror, move, plot, scale, save, window, frame, zoom, copy, rotate, translate, nest, hatch, fillet, file, read.

Competency 2: Discuss the benefits associated with computer assisted drafting and identify current major application areas of CAD/D, as well as future applications, including:

2.1 Elaborate on the distinct advantages of CAD in regard to: speed, accuracy, revisions, neatness, legibility, cost, repetition, and shared data base.

2.2 Describe the prominent industrial applications of CAD/D to include: civil engineering and mapping, electrical/electronic, architectural and structural, piping and plant design, mechanical drafting and design, technical illustration, and finite element analysis, modeling, and business graphics, graphs and charts.

2.3 Discuss present and future implications for CAD/D in regard to factory of the future concepts.

Competency 3: Elaborate on the function, specifications, and options available for a CAD system, including:

3.1 Provide an explanation of the function and specifications associated with system input devices such as keyboard, digitizer, stylus, light pen, puck, joystick, mouse and thumbwheel, and demonstrate their use.

3.2 Provide an explanation of the function and specifications associated with system output devices such as monitor/display, disk drives, printer, and plotter.

3.3 Provide an explanation of the function and specifications associated with a system such as: processor, memory, interface ports, communication devices, operating system, languages, graphic libraries.

3.4 List the options available and cite the system characteristics achieved by selecting a specific package in regard to processing capability, memory capacity, storage devices, interface/communications capability, display graphics resolution, peripheral options, operating system, languages, libraries, system configuration.

3.5 Compare and contrast a stand-alone and a local area network system.

Competency 4: Explain, in general terms, the system capabilities commonly available for CAD, for CADD, for CIM operations, including:

4.1 Describe commonly available technology for CAD systems.

4.2 Describe commonly available technology for CADD systems to include mass property calculations (surface area, volume, centroids, moments of inertia), 3D, wire frame modeling, routing of printed circuit board interconnects, rotation of an object.

4.3 Describe advanced technology CADD system capabilities to include bill of materials, family of parts (coding and classification) spline generation, surface shading imagery, cut away view, component placement (electronic design) solid modeling, 3D, simulation, finite element analysis.

4.4 Identify basic features of available technology for completing CIM functions commonly associated with CAD/CADD to include instrument/process control, scientific data analysis, engineering data analysis/CAE.

Competency 5: Utilize an interactive graphics workstation to create and modify CAD drawings and produce hard copies of the same, including:

5.1 Apply the use of input devices to create CAD drawings.

5.2 Demonstrate the use of software features to perform grid coordinate selection, geometry element development, line style selection, dimension selection, select fonts, generate text, crosshatch, mirror image, copy, erase, window, zoom.

5.3 Create basic geometry and construct orthographic drawings using CAD.

5.4 Create dimension drawings, add text to drawings, create various section drawings, edit drawings, create and merge symbols into drawings.

5.5 Perform utility functions to manipulate drawing files, print/plot hard copy, and archive drawings.

Recommended Course Textbooks:

Fundamentals of CAD, Bertoline, Gary R. Delmar, Albany, NY 1985
ISBN 0-8273-2332-8
ISBN 0-8273-2333-6 (Instructor's Guide)

CAD/CAM: Computer-Aided Design & Manufacturing, Groover, Mikell P, and Zimmers, Jr., Emory W., Prentice Hall, NJ. 1984
ISBN 0-13-110130-7

Note: This text will be a required text for a second year course also -- CAD instruction will involve 6 of 22 chapters.

Other -- system specific software/operator's manual

Methods of Instruction:

Lecture and discussion, assignments, demonstrations and laboratory sessions.

Methods of Evaluation:

Quizzes, written assignments, class discussion, laboratory project completion.

Equipment:

Standard classroom/media projection equipment, appropriate laboratory equipment.

Recommended Agencies for Instructional Material:

(System Software/Hardware Vendors)

Career Aids, Inc.
20417 Nordhoff St., Dept. 1N4
Chatsworth, CA 91311
(818) 341-8200

Creative Publishing Co.
Box 9292
College Station, TX 77840

Delmar Publishers, Inc.
2 Computer Drive, West
Box 15015
Albany, NY 12212

Other Instructional Material Sources:

National Computer Graphics Association
P.O. Box 3412
McLean, Virginia 22103

Various manufacturers and vendors of CAD hardware and software

Course Competencies For:

1. CNC Machine Tool Set-up/Operation CIM 101 2 Credits
One Hour Lecture
Two Hours Laboratory

2. Course Description: This course is designed to provide instruction on accident prevention practices maintenance, set-up, and operation of Computerized Numerical Control (CNC) lathes and mills. Topics of coverage will include tooling, documentation, machine controls/limitations/capabilities, fixturing and machine setup, and program editing.

Prerequisites: GET 108, Sketching and Print Interpretation
GET 122, Manufacturing Processes II (or equivalent industrial experience -- see advisor)

3. Course Competencies/Behavioral Objectives

Competency 1: Demonstrate accident prevention and preventative maintenance practices and procedures associated with setup/operation of CNC mills and lathes.

1.1 Clean machine and coolant sump, determine specification requirements, mix and install coolants.

1.2 Determine requirements from appropriate manuals/spec sheets, select, and install/apply lubricants and preservatives.

1.3 Inspect, clean, and adjust, with regard to specifications, hydraulic and/or pneumatic filter/regulators-lubricators.

1.4 Demonstrate the ability to properly safeguard individual machine tools, holding devices, and tools during handling, transport, and installation/set-up.

1.5 List and demonstrate the safeguard procedures to employ when isolating and starting-up power systems for maintenance reasons.

1.6 Ascertain requirements and execute routine and special preventative maintenance tasks for each assigned machine.

Competency 2: Define terms associated with CNC mills and lathes -- their controls and operation.

2.1 Explain the terminology used to describe the basic form and features, as well as parts, of a CNC lathe and milling machine.

2.2 Discuss terms and definitions relative to lubricants/coolants, protective devices/guards, holding devices, and precautionary/emergency measures.

2.3 Identify the functions of the MCU, the control indicators and alarm messages, as well as switches, keys, and buttons.

2.4 Describe the meaning of terms associated with coordinate reference systems as they relate to the MCU, the machine, the part, the program.

2.5 List the word address alphanumeric codes available on particular machines and the command designation each represents.

2.6 Name various peripheral devices for CNC machines and describe the function of each.

2.7 Cite, and utilize, terms and nomenclature used to define tools, inserts, set-up tools, and holding devices.

2.8 Compare and contrast symbols, terms, and nomenclature associated with program documentation including routing, operation, tooling, set-up, production, and inspection sheets, as well as the program manuscript, and the piece part drawing.

Competency 3: Identify the specification, documentation, and procedural requirements for installing and setting tools, for work holding devices, and for making parts.

3.1 Interpret documentation and sketches/drawings to determine work holding devices, placement, and alignment.

3.2 Demonstrate the ability to set-up/align work holding devices.

3.3 List the accident prevention practices and procedures for installing and setting tools, and work holding devices.

3.4 Select, prepare, and install tools on a CNC mill and lathe.

3.5 Describe the procedural steps required to preset tooling.

3.6 Explain the tasks and operations involved in establishing and recording tool offsets and compensation at the machine tool.

3.7 Demonstrate knowledge of control indicator, keys, and switches by entering/editing tool information in the MDI mode.

3.8 Identify the information required to perform quality, efficiency, and productivity calculations.

Competency 4: Interpret basic CNC programs.

4.1 Explain the coding statements utilized within a program to perform safe system start-up/shut-down routines.

4.2 Utilize program manuscript code words to describe machine tool motion and actuation with respect to a specific machine/control.

4.3 Determine gage height/rapid plane, clearance plane, and Z-depth values and describe appropriate moves with regard to a program print-out.

4.4 Identify mode selection/changes involved with incremental/absolute positioning, and circular/polar/linear moves.

4.5 Describe tool change parameters/execution, and tool offset moves as indicated on a CNC program.

4.6 Discuss canned cycles and subroutine statements with respect to a specific machine.

4.7 Provide a written narrative as to machine tool actuation/movements and control parameter execution, for a basic CNC program.

Competency 5: Perform power-up, test run, and production runs on CNC mills and lathes.

5.1 Determine and utilize information relative to processing/producing parts such as part name, work order number, part print, material specifications, required operations, number of parts, production deadline authorization, standard times/set-up/production, program number, holding devices, tools required, tool positions, sequence of operations, special instructions, program home position, inspection techniques/tools/records, etc.

5.2 Select, prepare, and mount tools and work holding devices, and piece-part in accordance with program documentation.

5.3 Utilize MCU and appropriate devices to align work holding/piece-part/machine/tool coordinate system axes.

5.4 Align the MCU, set-up, and operate peripheral devices such as tape punch/readers, disc drives and terminals.

5.5 Demonstrate knowledge of the control indicators, keys, buttons, and switches by entering/editing program information via the Manual Data Input (MDI) mode.

5.6 Perform MCU functions such as entering cutter offsets/cycle time/compensation values, program reset, cycle interrupt, speed and feed adjustment, emergency stop, feed jog, index turret/tool, power-up/shut-down to accommodate tool/work holding conditions.

5.7 Demonstrate knowledge of control indicators, keys, and switches by powering up the control/machine and performing machining operations.

5.8 Calculate efficiency, rejection rate, and productivity, and perform production run to required efficiency and productivity.

5.9 Inspect the in-process and finished part in accordance with program documentation making tool offset adjustments as required.

Recommended Course Textbooks (Instructor's Preference)

Basic C.N.C. Programming, C.E. Publishing Co., P.O. Box 488, Plantsville, CT 06479

**Computer Numerical Control: Concepts and Programming Seames, Warren S., Delmar, Albany, NY 1986

**Computer Numerical Control, Pusztal, Joseph, and Sava, Michael, Reston Pub., Inc., Virginia 1983

**Recommended text(s) adopted to be used in CAM courses.

Other: Machine Tool and Control Manuals -- Sections of relevance

Information Sheets

Methods of Instruction

Lecture and discussion, assignments, demonstrations and laboratory sessions.

Methods of Evaluation

Quizzes, written assignments, class discussion, laboratory project completion.

Equipment

Standard classroom/media projection equipment, appropriate laboratory equipment.

1. <u>Computer Assisted Design II CAD 102</u> 3 Credits
One Hour Lecture
Four Hours Laboratory

2. Course Description: This course is designed to expand upon the activities and functions covered in Computer Assisted Design I. Emphasis will be placed on mastery of concepts and skills, as well as on productivity and introduction of advanced software functions. Topics of coverage will include composition of drawings via system specific menu option utilization, use of advanced computer assisted drafting/design functions, and the application of special library symbols for the creation of two dimensional (2D), and basic three dimensional (3D) images.

Prerequisite: CAD 101 , Computer Assisted Design I

3. Course Competencies/Behavioral Objectives

Competency 1: Synthesize concepts with intermediate and advanced software specific menus, commands, and functions to create images, and determine design criteria.

1.1 Describe the operational mode and use for each keyboard function key.

1.2 Construct elements, trim lines, create and copy groups of elements.

1.3 Set and use layers during image creation.

1.4 Perform windowing techniques and menu functions.

1.5 Define, add, modify, group, and merge images.

1.6 Draw crosshatching on sectional views.

1.7 Determine, via software options, cross-sectional area and other properties such as planar moments, center of gravity, moment of inertia, radius of gyration and section modulus.

1.8 Create symbols and merge/retrieve same from libraries.

1.9 Configure plotter output to create a paper copy of the drawing displayed on the screen, to include create a plot spool, set display colors, assign default and variable specifications with regard to boundaries, scaling, and window factors, etc.

Competency 2: Demonstrate the use of intermediate level techniques to create drawings.

2.1 Apply advanced construction techniques in the creation of drawing elements.

2.2 Dimension horizontal, vertical, and angular lines and surfaces as well as arcs, and circles.

2.3 Perform dual dimensioning activities and baseline dimensioning, to include extension line only, extension line and half-dimension line, extension and dimension lines.

2.4 Select, display, add, and arrange text via keyboard and digitizer operations.

2.5 Modify extension and dimension lines as well as units and text.

2.6 Use geometric tolerancing symbols, feature control block, and basic dimensional blocks to qualify detail/working drawings.

2.7 Manipulate software in a manner conducive to moving, deleting, changing, rotating, copying, mirroring, adding, and scaling geometry and text.

2.8 Configure system for use and utilize masks and special menus (with digitizing equipment) to input drawing geometry and perform function changes.

Competency 3: Utilize upper-level functions of an interactive graphics package.

3.1 Combine graphic elements, alphanumeric characters, and special symbol creation techniques during advanced drawing development.

3.2 Demonstrate the use of basic transformation techniques such as enlargement and reduction, image reposition, and image rotation to alter and create intermediate and advanced drawings.

3.3 Replace, delete, and otherwise modify portions of an image with the use of software segmenting functions.

3.4 Operate display and windowing functions to transform graphics models to desired angles and display magnification, and remove hidden lines.

3.5 Access and interpret on-line documentation (HELP) features to acquire information for further image development.

3.6 Verify specific geometry elements comprising an image.

3.7 Measure angles, distances and calculate areas for a part.

3.8 Select and apply layering and color discrimination functions to separate different types of information relative to image creation.

3.9 Create and execute macros.

Competency 4: Depict objects as two dimensional (2D) and three dimensional (3D) drawings.

4.1 Define terms associated with 2D/3D drawings.

4.2 Create drawings with orthographic perspective, isometric, and oblique views.

4.3 Produce drawings with a depth plane.

4.4 Project geometry in a plane, to include principle, inclined, and oblique surfaces.

4.5 Create, delete, and add edges between image faces.

4.6 Describe surfaces of revolution.

4.7 Create, delete, and add surfaces.

4.8 Draw ruled and warped surfaces.

4.9 Portray 3D objects in a wireframe model.

4.10 Combine (or brick) selected images to produce primitives.

4.11 Construct swept surfaces (surface of revolution) and projected surfaces (tabulated cyclinder).

4.12 Enhance the realism of a 3D drawing by employing shading techniques.

Recommended Course Textbooks:

Fundamentals of CAD, Bertoline, Gary R. Delmar, Albany, NY 1985 ISBN 0-8273-2332-8; ISBN 0-8273-2333-6 (Instructor's Guide)

CAD/CAM: Computer-Aided Design & Manufacturing, Groover, Mikell P, and Zimmers, Jr., Emory W., Prentice Hall, NJ 1984 ISBN 0-13-110130-7

Other: System specific software/operator's manual
CAD-tutorial exercise text/workbooks - software specific - various publishers

Methods of Instruction:

Lecture and discussion, assignments, demonstrations and laboratory sessions.

Methods of Evaluation:

Quizzes, written assignments, class discussion, laboratory project completion.

Equipment:

Standard classroom/media projection equipment, appropriate laboratory equipment.

Recommended Agencies for Instructional Material:

(System Software/Hardware Vendors)

Career Aids, Inc.
20417 Nordhoff St., Dept. 1N4
Chatsworth, CA 91311
(818) 341-8200

Creative Publishing Company
Box 9292
College Station, TX 77840

Delmar Publishers, Inc.
2 Computer Drive, West
Box 15015
Albany, NY 12212

Course Competencies For:

1. CNC Machining I CIM 103 3 Credits

Two Hours Lecture
Two Hours Laboratory

2. Course Description: This course is designed to provide introductory instruction relevant to the information, practices, and procedures utilized to perform CNC programming of machine tools. Programming emphasis will include basic manual programming as well as basic off-line computer programming of milling machines. Students will be responsible for verifying programs on a plotter and on a CNC mill. Topics of coverage will include: analysis of part geometry, material, finish, and accuracy, as well as determination of machining operations, machine selection, definition of finished part geometry via manual and computer programming, documentation, and piece-part prototype verification of CNC milling machine work pieces.

Prerequisites: MAT 112, Technical Mathematics II

GET 108, Sketching & Print Interpretation

CIM 101, CNC Machine Tool Set-up/Operation (or equivalent occupational experience)

3. Course Competencies/Behavioral Objectives

Competency 1: Identify and document job planning and tool selection criteria for CNC milling machines.

1.1 Compare the most common configurations for CNC mills in regard to axes of motion, machining capabilities, etc.

1.2 Explain the schemes used to categorize and identify various types, styles, and composition of milling cutters and inserts, and properly document same.

1.3 Perform, verify and document (in regard to machine tool parameters) speed, feed, torque, and horsepower requirements for tools.

1.4 Establish a logical sequence of machining operations for programming a piece-part.

1.5 Discuss the use of tool libraries as a source for acquiring tool information.

1.6 Identify tooling requirements and prepare documentation for a particular machine, job, operation, to include adapters, collets, drills, boring bars, inserts, special tooling setups, tool, tool-pocket location.

1.7 Ascertain the need for pre-set or qualified tooling and document same.

1.8 Determine and document coolant selection with respect to part and tool materials, cutting operations and conditions.

1.9 Prepare a detailed tooling sheet for use by a tool setter and machine tool operator.

1.10 Describe needs, make selection, and prepare documentation materials for basic work holding devices to include placement, orientation, and alignment with respect to piece-part, table, and tool.

Competency 2: Apply basic manual programming techniques to create, analyze, modify, and proof piece-part programs.

2.1 Develop a CNC baseline dimensioned drawing from a conventional drawing and formulate a list of machining operations for the completion of a workpiece.

2.2 Apply mathematical principles and formulae to define part surface geometry and cutting tool locations.

2.3 Cite the differences between circular, polar, and linear interpolation, absolute and incremental positioning, cutter offset and compensation.

2.4 Compare and contrast part, machine tool, and cutting tool Cartesian coordinate systems.

2.5 Explain programming terminology such as part datum surface, set-up point, machine zero, tool change location, safe point/zone, transformation, gauge height, rapid plane, interference plane, clearance plane, Z-depth, etc.

2.6 Define programming terms associated with a program manuscript, set-up sheets, tooling sheets, job plans and other program documentation.

2.7 Use prints and drawings to determine information in regard to establishing zero-points for coordinate systems.

2.8 Describe the logical sequence of activities to perform in the development of a manually prepared part program manuscript to include documentation and part verification.

2.9 Utilize machine specific word address codes, along with absolute and incremental positioning techniques, as well as linear, polar, and circular interpolation to program a piece-part.

Competency 3: Prepare and utilize documentation for manual and computer programming of CNC equipment.

3.1 List the information requirements for selecting and programming a CNC mill.

3.2 Complete required calculations and develop a logical method for documenting a program.

3.3 Gather documentation for programs and prepare a documentation narrative.

3.4 Develop techniques and aids to programming.

3.5 Prepare an operator's documentation manual for a program.

3.6 Maintain computer utilization logs and records.

3.7 Create documentation files for processed production jobs.

3.8 Copy and label files for backup and archiving purposes.

3.9 Code and update data-bases.

3.10 Utilize computer system documentation to gather and interpret information on computer programming software.

3.11 Recommend, create, carry out, and evaluate programming documentation standards, guidelines, instructions, and procedures (as a programming team member).

Competency 4: Determine Computer Aided Machining (CAM) hardware/software operating requirements.

4.1 Identify the commonality of features shared by various off-line programming software systems.

4.2 Define the hardware requirements of an off-line CNC machine tool programming system.

4.3 Checkout peripheral wiring and connectors to assure electrical continuity, and data requirements.

4.4 Perform power-up/shut-down and alignment procedures for central processing unit/local area network server/user terminal/station, disk drives/type drives, printer, plotter, digitizing devices and other peripherals as well as communication devices (as appropriate).

4.5 Format storage devices, up/down load programs, files, and data bases to storage devices and controls.

4.6 Transmit, receive, and transport data files and machine specific monitoring information.

Competency 5: Operate an off-line CNC machine tool programming system.

5.1 Run computer system programs, inputting required data and modifying same.

5.2 Identify and select menus in a logical progression for program creation.

5.3 Develop a computer specified programming coordinate system relevant to the portrayal of machine tool, piece-part, and tool coordinates.

5.4 Use system-software specific function, alphanumeric, and programmable keys as keyboard input devices to create a software program.

5.5 Compute and create piece-part geometry via keyboard, digitizing devices, and menu selections.

5.6 Utilize libraries, subroutines, and existing programs in the formation of new programs.

5.7 Access and use various programming features of a software package.

5.8 Demonstrate the use of software utilities.

5.9 Post-process computer generated programs to create machine code.

5.10 Plot cutter paths to verify machine code.

5.11 Prepare printed materials as hard-copy documents for a specific programming system.

5.12 Clean disk drives, printers, and plotters -- load plotter and printer with paper and clear jams.

Competency 6: Ascertain the programming and production capabilities of a CNC milling machine.

6.1 List the accident prevention practices and procedures the programmer, program proofer, and machine tool operator should exhibit during execution of their respective job responsibilities.

6.2 Determine the capabilities and limitations of a CNC mill with regard to machine characteristics, machining parameters, control functions, and axis control.

6.3 Discuss the use of auxiliary positioning devices to accomplish multiple part set-up and/or execution of additional axes.

6.4 Utilize troubleshooting techniques to identify and eradicate programming errors.

6.5 Perform MDI editing techniques at the machine control unit to correct program code errors.

6.6 Proof machine code statements via a desk-check and operate an MCU for a CNC mill to effect program loading, dry run, and prototype part runs.

6.7 Use inspection tools and equipment to verify machined prototypes against print specifications.

Recommended Course Textbooks (Instructor's Preference)

Computer Numerical Control: Concepts and Programming, Seames, Warren S., Demar, Albany, NY 1986

Computer Numerical Control, Pusztal, Joseph, and Sava, Michael, Preston Pub., Inc., Virginia, 1983

Principles of Numerical Control, Childs, James J., Industrial Press, NY, NY

Other -- Reference and application manuals for selected programming softward

Programming, operation, and MCU manuals for selected CNC machine(s)

Information sheets

Methods of Instruction:

Lecture and discussion, assignments, demonstrations and laboratory sessions.

Methods of Evaluation:

Quizzes, written assignments, class discussion, laboratory project completion.

Equipment:

Standard classroom/media projection equipment, appropriate laboratory equipment.

Course Competencies For:

1. Title: Industrial Safety GET 112 1 credit
One Hour Lecture

2. Course Description: This course is designed to provide instruction in industrial safety and accident prevention for employees and managers. Occupational Safety and Health Act (OSHA) of 1970 requirements are stressed. Administrative aspects of record keeping, rights and responsibilities, standards, safety program development and implementation are also covered. The student will receive basic instruction on the identification of accident causes and become aware of the steps required to prevent industrial accidents. Upon successful completion of this course, the student should be able to:

3. Course Competencies/Behavioral Objectives

Competency 1: Demonstrate an awareness of definitions and a basic understanding of safety and accident prevention practices and procedures, including:

1.1 provide basic definitions associated with accident prevention.

1.2 describe how accident and injury rates are determined.

1.3 explain how accidents occur and how they can be avoided/prevented.

1.4 list environmental and human factors contributing to accidents.

1.5 identify job/work factors involved in accidents.

Competency 2: Demonstrate an understanding of voluntary compliance program legislation including:

2.1 policies affecting the legal and moral considerations associated with accidents to include--responsibility, liability and accountability.

2.2 explain the reasons why management and employees should assume responsibility for accident prevention.

2.3 identify the various levels at which laws-ordinances-regulations-codes-standards have been adopted to protect individuals.

2.4 describe relevant national legislation and regulations affecting occupational safety and health.

Competency 3: Demonstrate an understanding for the provisions and implications of a voluntary compliance accident prevention program, including:

3.1 describe the elements of a viable program.

3.2 explain how to establish an administrative scheme for assignment of levels of responsibility.

3.3 develop a scheme for planning a program.

3.4 develop a scheme for implementing a program.

3.5 develop a plan for reviewing, auditing and enhancing an accident prevention program.

3.6 list sources of assistance for guidance, problem-solving, administration, and implementation of a local program.

Competency 4: Identify the important aspects of administering a voluntary compliance accident prevention program under the Occupational Safety and Health Act.

4.1 describe how and where to obtain current information regarding standards adopted under the Act.

4.2 identify guidelines and procedures for developing and maintaining record keeping forms.

4.3 cite the specific rights and responsibilities of employers and employees under the Act.

4.4 develop various policy statements and forms for implementing a program in accordance with the OSHA Act.

Recommended course textbook:

Supervisors Safety Manual
National Safety Council, 444 N. Michigan Avenue, Chicago, IL 60611 (312) 527-4800

Recommended course reference text materials:

1) General Industry OSHA Safety and Health Standards (29CFR1910) OSHA 2206
Department of Labor, Occupational Safety and Health Administration (available at no cost from local OSHA office)

2) The OSHA Act of 1970 - OSHA 2001 -No cost - Local OSHA office.

3) Safety & Health Regulations for Construction, 29CFR 1926
Department of Labor, Occupational Safety and Health Administration
(available at no cost from local OSHA office)

Recommended instructor references:

Note: It is recommended that the following be acquired, kept on file, and issued to course instructor:

**OSHA Safety & Health Training Guidelines for General Industry (PB-239 310/AS)

**OSHA Safety & Health Training Guidelines for Construction (PB-239312A/S)

**Available from the National Technical Information Service, U.S. Department of Commerce, Springfield, VA 22151

One FREE copy of the following can be obtained from the local OSHA area or regional office:

OSHA Handbook for Small Businesses OSHA 2209
Construction Industry, OSHA 2202
General Industry, OSHA 2206
Organizing a Safety Committee, OSHA 2231
OSHA Inspections, OSHA 2098
Essentials of Machine Guarding, OSHA 2227
Excavation and Trenching Operations, OSHA 2226
OSHA Your Workplace Rights in Action, OSHA 3032
Noise, OSHA 2067
Recordkeeping Requirements Under the OSHA Act of 1970
What Every Employer Needs to Know About OSHA Recordkeeping, OSHA 412-
Job Safety and Health Protection, OSHA 2203 (Poster)
All About OSHA, OSHA 2056
Publications on Toxic Substances, A Descriptive Listing: Published by Interagency Regulatory Liaison Group (Available through OSHA or EPA)

Recommended Agencies for Other Instructional Materials:

AMERICAN CONFERENCE OF GOVERNMENTAL INDUSTRIAL HYGIENISTS (ACGIH)
6500 Glenway Ave., Bldg. D-5, Cincinnati, OH 45211

AMERICAN INDUSTRIAL HYGIENE ASSOCIATION (AIHA)
475 Wolf Ledges Parkway, Akron, OH 44311

AMERICAN NATIONAL STANDARDS INSTITUTE (ANSI)
1430 Broadway, New York, NY

AMERICAN SOCIETY OF SAFETY ENGINEERS (ASSE)
850 Busse Road, Park Ridge, IL

AMERICAN WELDING SOCIETY (AWS)
2501 N.W. 2nd Street, Miami, FL 33125

BEST, A.M. & CO. (Best's Loss Control)
Amherst Road, Olkwick, NJ 08850

BUREAU OF NATIONAL AFFAIRS (BNA)
1231 25th Street, N.W., Washington, DC 20037

CHEMTREC HOT LINE for emergency spills of combustible and flammable liquids and caustic acids

CODE OF FEDERAL REGULATIONS (CFR)
Superintendent of Documents, U.S. Government Printing Office
Washington, DC 20402

COMMERCE CLEARING HOUSE (CCH)
4025 W. Peterson Ave., Chicago, IL 60646

COMPRESSED GAS ASSOCIATION, INC.
1235 Jefferson Davis Highway, Arlington, VA 22202

DEPARTMENT OF TRANSPORTATION (DOT), Materials Transportation Bureau Information Services Division, Washington, DC 20590

FACTORY MUTUAL ENGINEERING (Factory Mutual System)
1151 Boston-Providence Turnpike, Norwood, MA 02062

FEDERAL REGISTER
Superintendent of Documents, U.S. Government Printing Office
Washington, DC 20402

NATIONAL AUDIOVISUAL CENTER (GSA), Information Services,
8700 Edgeworth Drive, Capital Heights, MD 20743

NATIONAL FIRE PROTECTION ASSOCIATION (NFPA)
Batterymark Park, Quincy, MA 02269

NATIONAL INSTITUTE FOR OCCUPATIONAL SAFETY AND HEALTH - (NIOSH)
4676 Columbia Parkway, Cincinnati, OH 45226

NATIONAL SAFETY COUNCIL (NSC)
425 N. Michigan Ave., Chicago, IL 60611

NATIONAL TECHNICAL INFORMATION SERVICE (NTIS)
5285 Port Royal Road, Springfield, VA 22161

SUPERINTENDENT OF DOCUMENTS U.S. GOVERNMENT PRINTING OFFICE
Washington, DC 20402

TECHNICAL DATA CENTER (TDC)
U.S. Dept. of Labor OSHA, TDC Room 2439, rear
200 Constitution Ave., NW, Washington, DC 20210

FOR RENTAL AND/OR PURCHASING OF VISUAL AIDS, CATALOGS SENT ON REQUEST.

THE GREATER CHICAGO SAFETY COUNCIL, INC. (Rental Only)
One North La Salle St., Chicago, IL 60602

NATIONAL ARCHIVES & RECORD SERVICE National Audiovisual Center, GSA Reference Section, Washington, DC 20409

Course Competencies For:

1. CNC Machining II CIM 104 3 Credits

Two Hours Lecture
Two Hours Laboratory

2. Course Description: Designed as a follow-up to CNC Machining I, this course will provide the students with advanced concepts and practices in off-line programming of CNC milling machines as well as lathes. Topics of coverage will include part analysis, with regard to selection and definition of working operations, workpiece holding, tool requirements, machine selection, documentation, advanced computer programming of CNC mill and lathe workpieces, as well as prototype verification on respective CNC machine tools.

Prerequisite: CIM 103, CNC Machining I

3. Course Competencies/Behavioral Objectives

Competency 1: Identify and document job planning and tool selection criteria for Computer Numerical Control (CNC) lathes.

1.1 Compare and contrast CNC lathe configurations in regard to axes of motion.

1.2 List the sequential order for completing lathe operations.

1.3 Analyze and document workpiece holding and positioning requirements.

1.4 Define programming guidelines and document detailed tooling requirements.

1.5 Explain axis movement on a CNC lathe and compare same with a CNC mill.

1.6 Ascertain and document part material, tool material, cutting conditions, coolant requirements, speed, feed, torque and horsepower requirements for a particular job.

1.7 Identify job requirements with regard to tool blocks, preset and qualified toolholders, boring bars, drill, stick-out, sleeves, inserts, special tools, etc.

1.8 Demonstrate the use of manufacturer's reference materials to acquire information related to making tooling selections.

Competency 2: Apply manual programming techniques to analyze, create, modify and verify CNC lathe programs.

2.1 Identify the basic knowledge a programmer must possess in order to prepare documentation and manuscripts for lathe programming.

2.2 Apply principles of mathematics, along with the principles of interpolation, to solve part geometry and cutting tool locations.

2.3 Manually calculate tool nose positions and offset coordinate locations required to complete various machining operations on a CNC lathe.

2.4 Produce manual programs via the use of tool offsets, absolute and incremental positioning, polar, linear, and circular interpolation, dwell, constant surface speed, etc.

2.5 Describe programming and setup considerations with regard to cut-off, bar-pulling, drilling, boring, and tailstock operations.

2.6 Explain and perform troubleshooting techniques for identifying and rectifying programming errors.

2.7 Compare and contrast the differences/similarities between programming a lathe and a mill.

Competency 3: Ascertain the programming and production capabilities of a CNC lathe.

3.1 Compare and contrast the accident prevention practices and procedures a milling machine operator, a lathe programmer, a CNC program checker, and a machine tool operator should exhibit during execution of their respective jobs.

3.2 Refer to manufacturer's manuals and determine the capabilities and limitations of a CNC lathe with regard to machine characteristics, machining parameters, control functions, and axis control.

3.3 Discuss the use of multiple slides and turrets to effect simultaneous machining operations.

3.4 Operate an MCU to perform program up/down loading, dry runs, and first-part runs.

3.5 Perform Manual Data Input (MDI) functions at the Machine Control Unit (MCU) to alter/correct program errors.

3.6 Use inspection tools and equipment to verify finished parts against print specifications.

3.7 Explain how to identify and alleviate problems associated with holding devices, speeds and feeds, and tooling.

Competency 4: Program a CNC lathe with an off-line computer programming system.

4.1 Load and run software specifically designed to accommodate programming of CNC lathes.

4.2 Use menus in a logical manner to create a program.

4.3 Explain how to establish part zero datum, machine zero, tool change, clearance points and tool coordinate definitions with regard to specific machines.

4.4 Utilize editing and merging techniques to create new programs.

4.5 Demonstrate the use of template and post-processing software to create machine code.

4.6 Interpret plots of completed programs during the cutter path verification process.

4.7 Prepare program documentation for filing purposes and for operator usage.

Competency 5: Perform advanced off-line programming techniques for CNC mills and lathes.

5.1 Program multiple station fixtures auxiliary positioning devices, and multiple machining operations for a CNC mill.

5.2 Formulate and verify subroutines and canned cycles.

5.3 Modify template and post-processor software to effect manuscript code changes.

5.4 Create/contribute to the development of tool library materials.

5.5 Describe how and when to use program structuring techniques such as looping and subroutines.

5.6 Calculate and produce programming routines for machining of rough cuts, threads, and tapers.

5.7 Merge and edit programs to produce new programs.

5.8 Discuss the specification to which CAD/CAM drawings need to be created in order to facilitate data transfer.

5.9 Convert Computer Assisted Drafting (CAD) drawings to CAM programs.

5.10 Explain the concept of Group Technology (GT), or Family of Parts (FOP), and the basic procedures programmers can employ to incorporate same into their routine programming/processing activities.

5.11 Identify the variables associated with part throughput for CNC mills and lathes.

5.12 Optimize programming parameters to increase efficiency and productivity.

5.13 Create advanced programs and verify same via plotting, dry-run, and first part runs on CNC mills and lathes.

Recommended Course Textbooks (Instructor's Preference)

Computer Numerical Control: Concepts and Programming, Seames, Warren S., Delmar, Albany, NY 1986

Computer Numerical Control, Pusztal, Joseph, and Sava, Michael, Preston Pub., Inc., Virginia, 1983

Principles of Numerical Control, Childs, James J., Industrial Press, NY, NY

Other: Reference and application manuals for selected programming software

Programming, operation, and MCU manuals for selected CNC machine(s)

Information sheets

Methods of Instruction

Lecture and discussion, assignments, demonstrations and laboratory sessions.

Methods of Evaluation

Quizzes, written assignments, class discussion, laboratory project completion.

Equipment

Standard classroom/media projection equipment, appropriate laboratory equipment.

Course Competencies For:

1. Computer Integrated Manufacturing Applications/Projects — CIM 202 — 3 Credits, 2 Hours Lecture, 2 Hours Laboratory

2. Course Description: This course is designed to provide the student with the knowledge and experience required to assist in the planning, development, implementation, and operation of a Computer Integrated Manufacturing (CIM) system. Laboratory experiences will be conducted in a computer integrated work cell environment. Topics of coverage will include the computer, integrating device, fundamentals of networking, system architecture, and shared information requirements, as well as aspects of Computer Assisted Engineering (CAE), Computer Assisted Design (CAD), Computer Assisted Manufacturing (CAM), Automated Materials Handling/Storage and Robotics in the CIM environment.

   Corequisites: CIM 104, CNC Machining II
   CAD I02, Computer Aided Design II

3. Course Competencies/Behavioral Objectives

   Competency 1: Provide an overview of the principle technologies involved with computer systems.

   1.1 Define terms associated with computer hardware and software.

   1.2 Discuss the hardware comprising a basic computer system.

   1.3 Describe the functions that a computer performs within an integrated system and how these functions are performed.

1.4 Explain the architecture of a computer with regard to hardware, firmware, and software.

1.5 Classify the types of system environments within which system software falls, identifying the basic type of functions an operating system typically performs.

1.6 List the main categories of programming languages and explain their function.

1.7 Distinguish between system and application software and discuss terms such as relational database, standard protocol, fault tolerance, and data security with regard to same.

1.8 Define terms such as timesharing, virtual machine, multiprocessing, control driver, data-driven, demand-driven, etc.

1.9 Cite the trends in electronics which are affecting the computer field.

Competency 2: Define the function of computer graphics technology, Computer Assisted Drafting and Design (CADD), and Computer Assisted Engineering (CAE), and cite their contribution to the CIM environment.

2.1 Identify the types, functions, and advantages of computer graphics systems.

2.2 Discuss graphics system hardware and the requirements/considerations for selecting same.

2.3 Determine how interactive graphics programming is accomplished.

2.4 Explain, in general terms, how a computer graphics system operates, how it can be used, and the activities the user is involved with when interacting with the system.

2.5 Describe the types of graphic software available for the integrated environment, the system requirements, the function, and application of each.

2.6 Discuss graphics software standards and the need for same.

2.7 List the types of geometric models that can be created on a graphics system and describe the purposes for which each is suited.

2.8 Define the drawing functions and features common to most mechanical and electronic (to include printed circuit board and semiconductor/integrated circuit) design systems.

2.9 Identify the engineering activities that are completed in a computer environment which assist in the movement of a product from design through production.

2.10 Describe the design process, the benefits attained through automation, what is involved in automating the design process, and cite considerations for automating the process.

2.11 Define physical property analysis, finite element analysis, and kinematics, tool design, test data generation, simulation, and explain how an interactive graphics system is used to effect same.

2.12 Describe how computer systems are used during manufacturing analysis to perform process planning, group technology classifications, and NC part programming.

Competency 3: Discuss Computer Assisted Manufacturing (CAM) with regard to a CIM environment.

3.1 Discuss issues relevant to U.S. manufacturing firms and factories and the impact that the computer is having on world-wide markets.

3.2 Give an overview of the use of computers, their impact on the workplace and the workforce, citing economic and social factors involved.

3.3 Describe the basic elements of CAM, the evolution of CAM, and the nature of the manufacturing environment (with regard to th role of the computer).

3.4 Explain the use of computers in manufacturing to include types, inter-dependency on data sources, and complexity of products.

3.5 Describe, in basic terms, computer numerical controls, their use, and system requirements.

3.6 Discuss computer applications in manufacturing with respect to tool control, shop flow control, process control, testing and measurement, materials handling, and automation in general.

Competency 4: Cite the role of the computer as an integrating device for the modern automated factory/industrial robot.

4.1 Identify the basic elements of, and define terms associated with, a computer controlled robot.

4.2 Discuss the types and functions of CIM programming languages, as well as the methods of programming a robot cell as well as plant-wide automation systems.

4.3 Explain how robot/automated storage/retrieval, and automated guided vehicle program can be written to utilize and accommodate sensory information from the robot workcell and factory floor.

4.4 Discuss how robot software decision-making branch statements are constructed.

4.5 Describe the types of sensory devices and control systems, and the requirements/considerations for interfacing same in a computer integrated environment.

4.6 Discuss the use of simulation in automated cell development and describe the requirements of a simulation package to effect same.

4.7 Describe how a computer can be used to effect off-line programming of an integrated automation system.

4.8 Discuss the interrelationships that must exist in a CIM environment to realize the full potential of automated manufacturing.

Competency 5: Discuss networking and centralized versus distributed Data Base Management Systems (DBMS) requirements.

5.1 Explain how the three major areas of a company, its internal structure (people and responsibilities),

technical applications (materials, product, equipment), and external factors (customers, suppliers, other influences) impact on each other and why specific needs must be defined within, and among, these areas to effect good CIM linkages.

5.2 Explain why parameters for the communications networking/operating, and data base management systems should be identified/selected early in the process of integrating computers within the manufacturing environment.

5.3 List the elements involved in the process of data transmission.

5.4 Enumerate the parameters which determine the performance of a communication channel.

5.5 Describe the hardware associated with computer networks.

5.6 Name and describe the various Local Area Network (LAN) topologies and cite applications for each.

5.7 Discuss various system network architectures, define and discuss data base management systems, their applications, as well as company management issues associated with same.

5.8 Explain the application of hierarchical control within a computer network.

5.9 Compare LAN environments and requirements for the business and manufacturing environments, and cite the implications for integrating databases.

5.10 Cite the key influencing factors for network selection in a CIM environment with regard to transmission media, fundamental concepts of equipment operation, communication considerations, architecture, inter-networking, and network control management.

5.11 Discuss the terms IGES (Initial Graphics Exchange Specification), and CAD data base accessibility in relationship to translation, transportability and management.

5.12 Distinguish between a centralized and a distributed data base management system, and cite the operating parameters for each.

5.13 Describe, in general terms, the system design architecture, interface, and integration issues associated with CIM hardware, the data management system, and application software modules.

5.14 Identify the role that computer simulation can play in the decision making process for various elements of network design and selection, as well as product design, process planning, manufacture, and distribution.

Competency 6: Describe the architectural requirements for a computerized plant-wide information communications system.

6.1 Explain why integrated business and manufacturing databases are needed.

6.2 Discuss the climate control, power distribution, and preventative maintenance systems' data requirements of a plant-wide computer system.

6.3 Identify the principle types of data that need to be shared in an automated manufacturing, materials handling, and warehousing environment.

6.4 Discuss the features and computer requirements of Materials Requirements Planning (MRP) and Manufacturing Resources Planning (MRPII) software.

6.5 Describe the design or engineering data requirements relevant to process planning, classification schemes, and Computer Aided Parts Programming (CAPP).

6.6 Describe the basic design and capability requirements for logical data systems.

6.7 Discuss some of the computer software tools that can be used to solve or prevent scheduling and routing problems.

6.8 Describe the types, function, and usage considerations for data collection systems.

6.9 Discuss general considerations for an automated materials handling system.

6.10 Describe the types, function, and usage considerations for Automated Storage and Retrieval Systems (ASRS), as well as automated transport and transfer systems.

6.11 Discuss the features and the computer requirements of a typical Flexible Manufacturing System (FMS).

6.12 Describe the basic features and computer requirements for administrative (business and control) systems.

6.13 Cite the primary high-level administrative functions to be included in a plant-wide information system and the inhibiters to attaining same.

6.14 Explain how integrated database systems work.

6.15 Define the requirements for an integrated database system.

6.16 Define the data systems that need to be managed in a plant-wide environment.

6.17 Discuss a typical hierarchical system structure for controlling a plant-wide operation.

6.18 Describe the types, functions, and control techniques currently being implemented in manufacturing and distribution environment architectures.

6.19 Discuss the reasons for designing manufacture or process flow lines with regard to product design, product production, storage, material handling, etc.

Competency 7: Assist in the planning, implementation, and maintenance of a CIM environment.

7.1 Contribute to the identification of areas within a company which must cooperate in the creation and maintenance of an automated environment for manufacturing/materials handling.

7.2 Contribute to the list of items to be considered in the planning and implementation stages of CIM.

7.3 Explain the methods available for determining the "as is" architectural infrastructure of a manufacturing company and the methods available for planning the "to be" system.

7.4 Discuss procedures for identifying plant and cell level communication requirements.

7.5 Describe some of the thinking and planning processes that can be employed in the development of a strategy for planning and implementing various phases of CIM.

7.6 Participate in an overall CIM policy development process.

7.7 Cite the reasons for establishing and maintaining standards for each level within the CIM environment.

7.8 Implement policies and procedures, and perform technician level tasks for the maintenance of a CIM environment.

Competency 8: Explain some of the advantages and disadvantages of a CIM system.

8.1 Describe the common manufacturing related problems associated with bulk, batch, discrete, and mass methods of production/distribution.

8.2 Cite the human communication problems associated with product development, design, manufacture, and distribution.

8.3 Explain how the research/design, process/scheduling management, and manufacturing operations of product production can be classified within the concept of

Group Technology.

8.4 Describe how CIM can increase productivity, improve product quality, decrease product development time, increase product options, and improve quality of work-life.

8.5 Identify the disadvantages associated with implementing and maintaining a CIM environment to include cost, software integration problems, communication problems, training requirements, systems specific learning curve duration, manpower requirements, technology developments, system security, data integrating, system back-up requirements, etc., and how these disadvantages can be addressed.

Competency 9: Demonstrate skills associated with programming, managing, and operating a CIM system.

9.1 Conduct equipment setup, adjustment and modifications to effect changes within a CIM cell environment.

9.2 Perform basic programming functions and operational techniques associated with a computer integrated Automated Guided Vehicle (AGV)/automated conveyor, materials handling, machine vision, robot, and Automated Storage and Automated Retrieval system.

9.3 Operate and maintain a CIM system.

Recommended Course Reference Textbook (Instructor's Preference)

Computer Automated Manufacturing, Powers, Jr., John H., McGraw-Hill 1987 ISBN 0-07-050601-9

**Computer-Integrated Manufacturing Technology and Systems

**Computer Integrated Manufacturing Handbook

**A Program Guide to CIM Implementation

**CIM Tech '87 Conference Proceedings

**Autofact '86 Conference Proceedings - New CIM Guidelines

**Note: Available through Society of Manufacturing Engineers (313) 271-1500

Other: Software, reference and application manuals from selected equipment and programming/data base management software.

Methods of Instruction

Lecture and discussion, assignments, demonstrations and laboratory exercises.

Methods of Evaluation

Quizzes, written assignments, class discussion, laboratory project completion.

Equipment

Standard classroom/media projection equipment, appropriate laboratory equipment.

MEMORANDUM

TO: CIM/CAM and Automated Systems/Robotics Task Force

RE: Recommendations for Equipment/Software Selection for Individual Program Areas

Make an effort to select equipment and software (CAD/CAM/CNC/Robotic/CIM which will serve both programs jointly; and which will be supported with student laboratory/exercise materials wherever possible. In this regard, hardware and software networking interface and integration capabilities should be considered from the outset. For example, CAM software should link with CAD software, and CAM software should include generalized post-processing capabilities and be compatible with CNC and robotic/automation equipment. Likewise, individual software packages should be integratable to achieve a CIM environment. This is particularly important to the instruction provided in the CIM course.[1] To effect in-house software integration can be quite frustrating and expensive and will require close scrutiny of system specifications, and will probably involve hiring of an individual with considerable programming background.

In essence, contract with consultants/vendors to provide fully interfaced and integratable hardware/software if monies are available, thus avoiding in-house problems of having to accomplish same.

[1]Note: A suggested product to review for compatibility and cost comparison purposes, and one which includes curriculum materials, interface and integration capabilities, would be the AML System (or one similar thereto) produced by Educational Technologies, Inc., Trenton, NJ.

ARTICULATION

(Secondary and Post-Secondary Education)

Vocational/occupational education supports the needs of local business and industry and prepares workers with entry-level skills. The need for articulation of programs is becoming more apparent due to growing local and national concerns for efficiency in education, rising costs of education, and elimination of duplication of effort and demands from the public for accountability. Employment needs and trends have changed drastically in the last decade as high technology transformed many jobs.

Coordination of secondary and post-secondary programs was a major theme of the 1976 educational legislation. The 1983 efforts of the Pennsylvania Advisory Council on Vocational Education fostered, among other things, stronger business and industry linkages with vocational programs and articulation efforts between secondary and post-secondary and adult vocational education programs.

In 1983, the Pennsylvania Advisory Council on Vocational Education made a recommendation on articulation agreements. The recommendation, as it addressed articulation, stated:

> 4. Articulation agreements between comprehensive schools, community colleges, colleges, universities and AVTS should be established. These agreements should stimulate joint efforts in facilities' utilization, curriculum planning, providing customized job training, utilizing business/industry contracts, etc. These agreements would be considered in the approval process for receiving state and federal vocational education funds.

Further, articulating programs between secondary area vocational-technical schools and the local community college would maximize the efforts and efficiency of our state educational system. This integration would be efficient and economical in terms of better use of facilities, staff and equipment, reduced length of study time, and the ability to address employer needs in a systematic plan.

In the development of this curriculum, the Computer Integrated Manufacturing/Computer-Assisted Manufacturing program was designed to build upon maximum integration of at least two major state education delivery systems, the community college and the secondary vocational-technical system. With this articulation plan and cooperation in mind, a decision must be made as to which students could profit the most from this learning experience.

Generally speaking, secondary students with a mechanical and/or drafting background seemed to have many of the basic skills necessary for a smooth articulation. This general category of mechanical trades and drafting suggested students from course selections such as:

* Drafting and Design
* Machine Shop
* Welding
* Appliance Repair
* Computer Service

* Electronics
* Welding, and other courses as deemed appropriate by a joint committee of the community college and the area vocational-technical school.

Specific courses which seem to be appropriate or reasonable starting points of exploration of articulation include:

* Technical Drafting,
* Technical Mathematics,
* Technical Physics,
* First Aid/Safety, and
* Computer-Assisted Design

While no one student would be expected to possess the background and/or competencies in all of the above courses, different students from various courses (programs) would have completed parts of or complete courses. Again, the determination of breadth, depth and evaluation of the articulation agreement should be determined by the joint committee.

Other courses not mentioned above should also be waived by students possessing competency in that area. Usually most institutions have a mechanism of evaluation to assess that background.

S E C T I O N IV:

A T T A C H M E N T S

A T T A C H M E N T S

1. Curriculum Development Task Force
2. Task Force Data/Recommendations
3. Advanced Technology Center Brochure
4. Program Brochure
5. Equipment Specifications

Attachment #1

CURRICULUM DEVELOPMENT TASK FORCE

1987 - 88

1. George Butwin
   Meyers High School
2. Joseph DeSanto
   Luzerne County
   Community College
3. Stanley Fraind
   Crestwood High School
4. Albin Grabowski
   Wilkes Barre AVTS
5. James Haggerty
   Wilkes Barre AVTS
6. Kathleen Heltzel
   West Side AVTS
7. James Kane
   West Side AVTS
8. Joseph Kasztejna
   Monroe Country AVTS
9. Edward Kuehner
   Luzerne County
   Community College
10. Kenneth Lewis
    Luzerne County
    Community College
11. Ormond Long
    Wilkes Barre AVTS
12. David Lyons
    West Side AVTS
13. Robert Mattern
    GAR High School
14. James Newell
    Wilkes Barre AVTS
15. Arthur Parsons
    Wyoming Valley West
    Sr. High School
16. Ben Rondomanski
    Lackawanna County AVTS
17. Walter Rounds
    Lackawanna County AVTS
18. Leonard Tarapchak
    Hazleton AVTS
19. Nathan Williams
    Wilkes Barre AVTS

ATTACHMENT #2

Task Force Data/Recommendations

MANUFACTURING PROCESSES I & II (GET 121 & 122)

ATTACHMENT #2

Book Review

1. Basic Manufacturing Processes
   Kazanas, Baker, Gregor
   Dave Lyons - Text adequate in coverage of manufacturing areas
   Robotics not mentioned
   Format and photographs reveal that the book is dated
   Recommend use of a more modern text
   Lenny Tarapchak - Not very up to date
   Material covered is somewhat insignificant
   I do not recommend this book
   Joe Kasztejna - Recommend this text for GET 121
   Contains all needed information to meet competency requirements
   Information in the text is up to date and well written
   Illustrations are also very good
   Jim Newell/Nate Williams - Out of date
   Recommend look for a different text

2. Principles of Machining
   American Society for Metals
   Joe Kasztejna - Text collection of technical writings in module form
   Each module can be used as a separate lesson with many of the competency requirements matching the lessons
   Recommend that the text be be used as separate lessons with the order revised to meet course competency requirements
   Lenny Tarapchak - Well defined processes as well as good back-up materials
   Recommend this book

Advanced Placement

Lenny Tarapchak recommends a written and a practical test. The time limit for both sections of the test is approximately 6 hours. Sample test attached.

Joe Kasztejna recommends a written and a practical test for Manufacturing Processes II. The practical test should emphasize competencies 3, 4, and 5. Manufacturing Processes I has a heavy emphasis on theory and therefore only requires a written test. Comments attached.

Additional Comments

SKETCHING AND PRINT INTERPRETATION (GET 108)

Book Review

1. Blueprint Reading for Industry
   Walter Brown
   Ben Rondomanski - Recommends use of this text with additional handouts to cover competency requirements not included
   May require use of second text

   John Witko - Material in the text is well written and easy to understand
   Instructor should present the material in a different order than the book
   Meets the competency requirements of the course
   The text can be used by a beginner or by someone with some experience
   The advanced section uses a variety of blueprints with different styles

Advanced Placement

Ben Rondomanski provided the attached test for advanced placement. John Witko feels the test is a good starting point for advanced placement criteria. Portfolios, interviews, etc. still must be examined.

Additional Comments

John Witko feels that actual industry blueprints should be used whenever appropriate. He is currently working on prints and parts for various sections of the course.

INTRODUCTION TO COMPUTER PROGRAMMING (GET 234)

Book Review

not applicable - current course

Advanced Placement

Kathy Heitzel recommends a one (1) hour written test and a one (1) hour practical test. The written test should include the following:

Know the difference between micros and mainframe computers

Know the function of and understand the differences between hardware, software, electronic spreadsheets, peripheral devices, etc.

Know and explain the following terms and acronyms:
Input, output, peripheral, CPU, graphics, bit, PC, LAN, mouse, hard copy, boot, execute, storage device, RAM, ROM, disk storage, CRT, byte, modem, ASCII, light pen, hard disk, files, debug, database, floppy disk, format, initialize, DOS, BASIC, microprocessor, host computer, remote terminal, monitor, menu, mode, backup, program

Know and understand the following commands - the exact command may differ depending on the computer used. But whatever computer is used, one must learn the commands. directory, erase, kill, BASICA - command to get in BASIC mode, system - to get back to system mode, rename

Know and understand the following BASIC commands - the above statement is still true regarding the computer used. SAVE, LIST, LOAD, PRINT, AUTO, LET, SUBR, FOR/NEXT, RUN, SYSTEM, EDIT, ERASE, DELETE, GOTO, IF THEN, READ DATA, INSERT

Know how to boot up the system - both ways

Know how to format a floppy disk to prepare it for use. Understand why we must prepare a disk.

Understand all the words listed previously and know what the acronyms mean in terms of the function they perform.

Know how to key in a program, execute it, debug it, and test it after corrections have been made.

Know how to call up files, check what is on your disk.

Know and understand all components of a PC, how they interface.

Know and understand where the PC field is going technologically.

Know and understand databases - internal and external.

Know and understand the additional equipment needed to access an external database.

Know and understand the difference between packaged software and user written programs.

Have an introductory knowledge of spreadsheets.

Additional Comments

D.C. AND A.C. ELECTRICITY (IEL 131 & 132)

Book Review

not applicable - current course

Advanced Placement

D.C. Electricity - May 10, 1988 discussion (attached)

Additional Comments

FLUID POWER (ASR 207)

Book Review

1. Industrial Hydraulics
   Pippenger and Hicks
   Jim Newell/Nate Williams - Book is outdated
   The text looks at fluids from a plumber's point of view
   Need robotic point of view for this program
   Walter Rounds - Book covers competencies as specified
   It is not easy to read
   I do not recommend this text

Advanced Placement

Not appropriate at this time.

Additional Comments

Walter Rounds suggests we review the following books for this course:

1. Mobile Hydraulics Manual
   Technical Training Center
   VICKERS, Inc.
   1401 Crooks Road
   Troy, Michigan 48084
2. Industrial Hydraulic Technology
   Bulletin 0221-B1
   Power and Controls Group
   Parker-Hannifin Corp.
   17325 Euclid Avenue
   Cleveland, Ohio 44112

CIM 101/103/104

Book Review

1. Basic CNC Programming
   Laviana and Cormier
   Lenny Tarapchak - More an example of a ready reference book than an actual theoretical book

2. Principles of Numerical Control
   Childs
   Al Grabowski - Book is obsolete - used a book like this in 1961

DIGITAL ELECTRONICS (IEL 205)

Book Review

not applicable - current course

Advanced Placement

Art Parsons recommends a written and practical test. The test(s) should be designed so that the same test can be given in various forms. This would prevent students from passing the test information on to other students. A sample test is attached.

Additional Comments

MANUFACTURING PROCESSES

LAB ADVANCED

PLACEMENT

Job/Task: ENGINE LATHE

PERFORMANCE OBJECTIVE:

The student given the necessary print and materials, will have two (2) hours to turn, neck, angle, and thread the lathe project. The student will be evaluated according to the operations of an engine lathe, General safety specifications, and tolerances on the Blueprint.

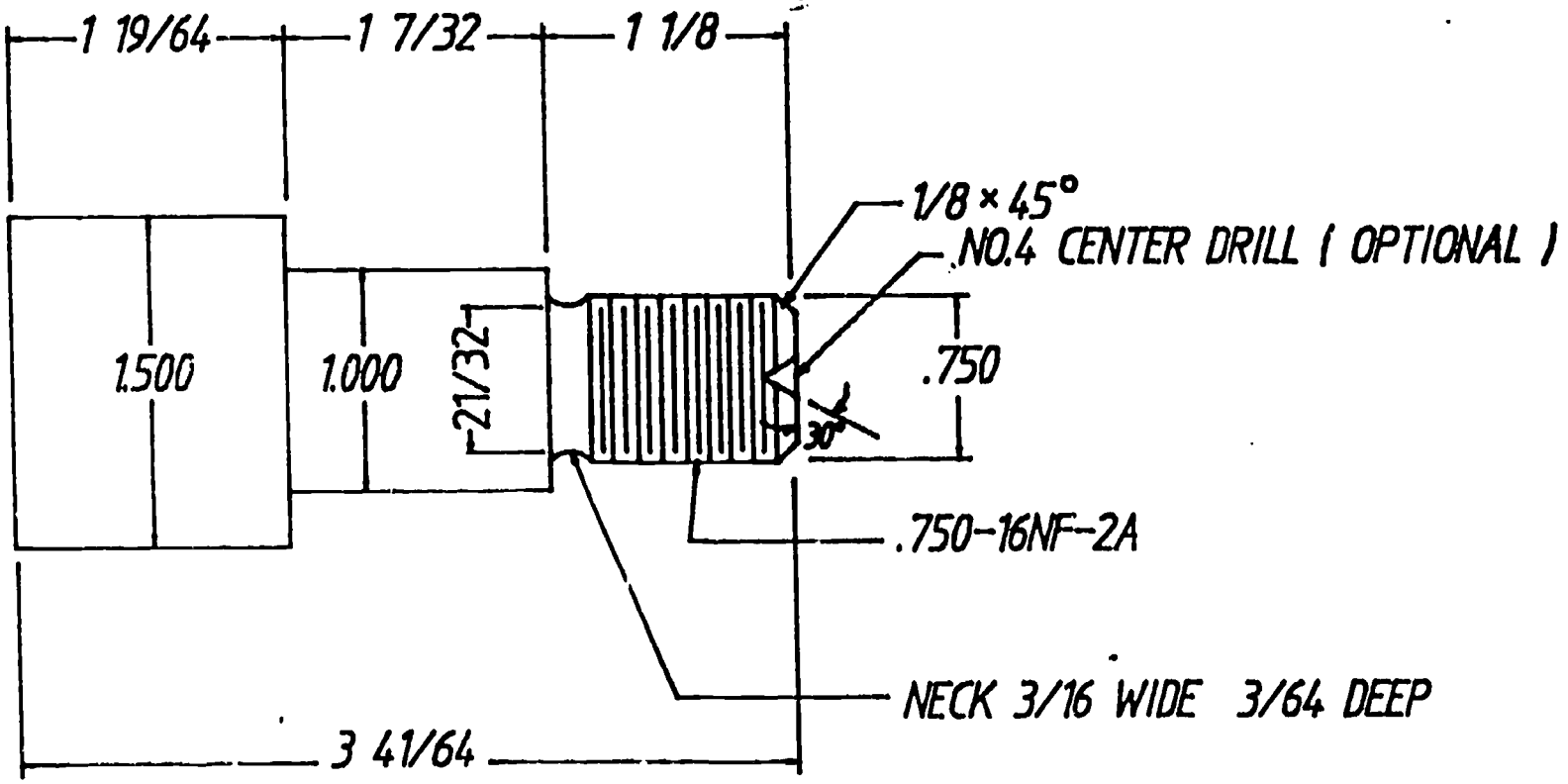

UNLESS OTHERWISE SPECIFIED:

LIMITS ON DECIMAL DIMENTIONS WITHIN ±.001"

LIMITS ON FRACTIONAL DIMENSIONS WITHIN ±1/64"

INSPECTION SHEET

Student_____ Instructor_____

PROJECT: TURNING EXERCISE.

Length, overall 3 41/64 _____

Diameters, O.D.

1.500 x 1 19/64 _____ × _____

1.000 x 1 7/32 _____ × _____

.750 x 1 1/8 _____ × _____

1/8 x 45 Chamfer _____ × _____

3/16 x 21/32 Neck _____ × _____

.750-16 T.P.I. _____ × _____

Class 2A

WORKMANSHIP _____

GRADE _____

MANUFACTURING PROCESSES

LAB ADVANCED

PLACEMENT

Job/Task: MILLING MACHINE

PERFORMANCE OBJECTIVE:

The student given the necessary print and materials, will have 1 hour to mill, drill, ream the project. The student will be evaluated according to milling, drilling and reaming safely, general safety specifications and tolerances on print.

MANUFACTURING PROCESSES

LAB ADVANCED

PLACEMENT

Job/Task: LAYOUT WORK

PERFORMANCE OBJECTIVE:

The student given the necessary print and materials will layout work piece that will be milled, drilled and reamed. The student will be evaluated according to the specifications of print and tolerances and general safety.

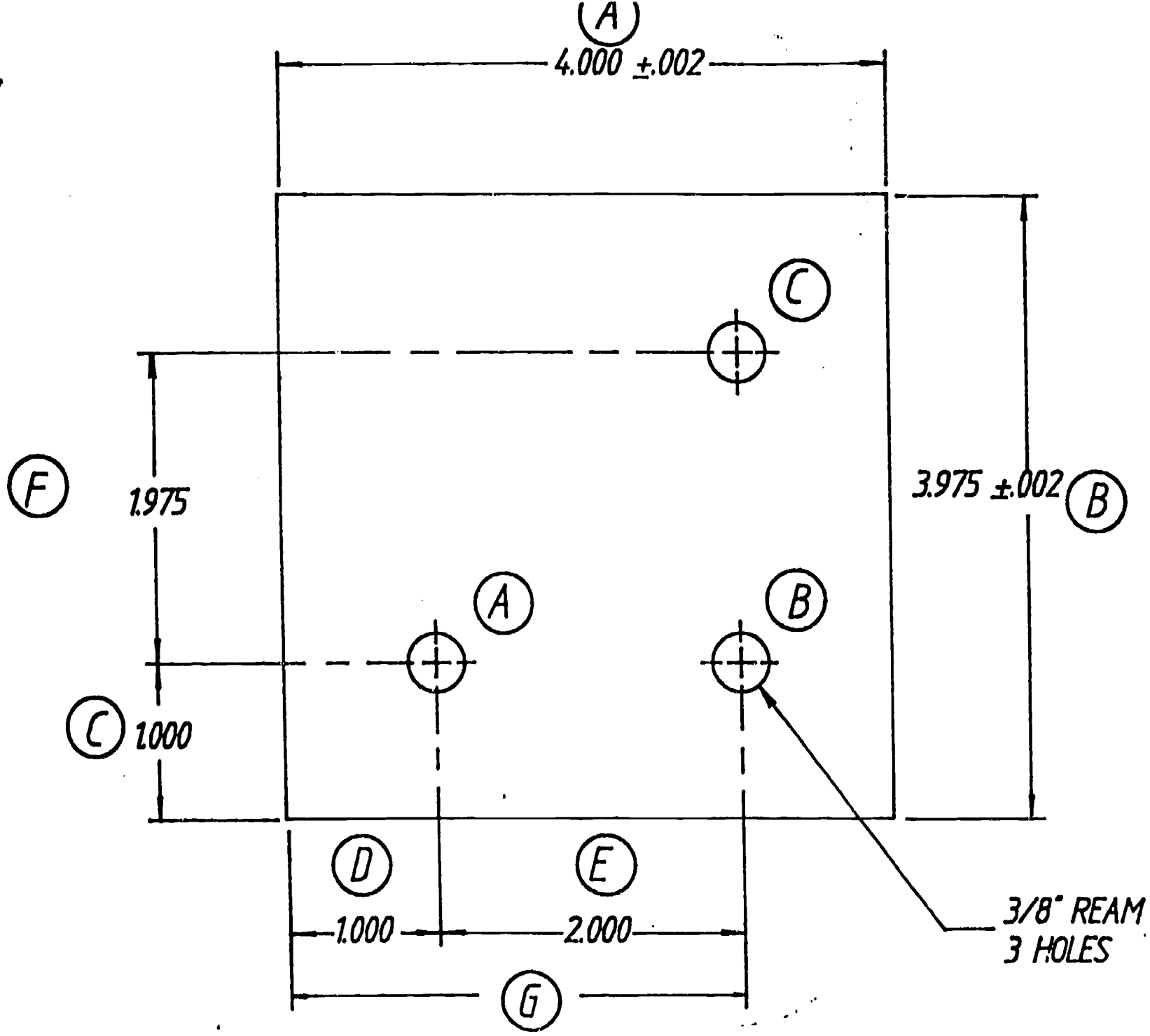

UNLESS OTHERWISE SPECIFIED:

LIMITS ON DECIMAL DIMENSIONS WITHIN ±.001"

INSPECTION SHEET

STUDENT_____ Instructor_____

PROJECT --- VERTICAL MILLING, DRILLING, REAMING EXERCISE.

Length A 4.000 ± .002 _____ _____

Length B 3.975 ± .002 _____

Location of Hole A - 1.000 x 1.000 ± .001 _____

Location of Hole B - 1.000 x 2.000 ± .001 _____

Location of Hole C - 3.000 x 2.975 ± .002 _____

Location of C - 1.00 ± .001 _____

Location of D - 1.00 ± .001 _____

Location of E - 2.00 ± .001 _____

Location of F - 1.975 ± .001 _____

Location of G - 3.000 ± .002 _____

3 Holes Ream to 3/8" Dia. ± .001 _____

WORKMANSHIP _____

GRADE _____

BEST COPY AVAILABLE

MANUFACTURING PROCESSES

LAB ADVANCED

PLACEMENT

Job/Task: SURFACE GRINDING

PERFORMANCE OBJECTIVE:

The student given the necessary print and materials will have 45 minutes to dress grinding wheel, to achieve size and finish the project.

The student will be evaluated according to the operations of a surface grinder, safety, general safety, specifications and tolerances on print.

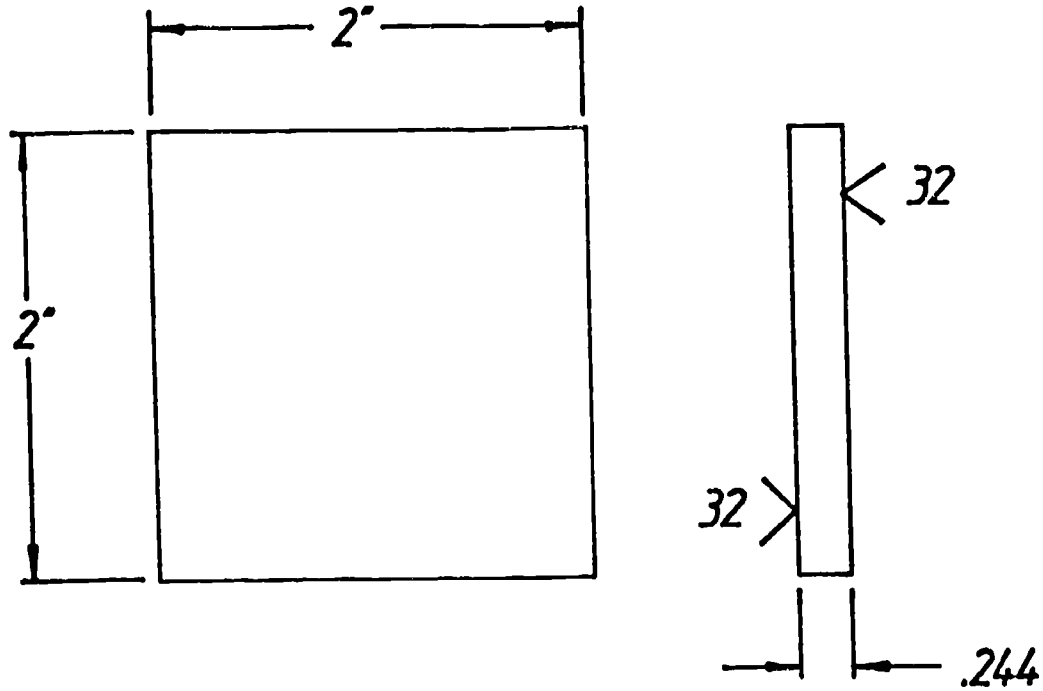

PLATE:
C.R.S.
BREAK ALL SHARP EDGES
LIMITS ON DECIMALS +.0005 −.0000
LIMITS ON FRACTIONS ±1/64"

INSPECTION SHEET

Student _____ Instructor_____

32

Grind Finish .244

+.0005

2 surfaces - 0000 _____

MANUFACTURING PROCESSES

LAB ADVANCED

PLACEMENT

Job/Task: BLUEPRINT READING

PERFORMANCE OBJECTIVE:

The student given the necessary Blueprint will have 45 minutes to interpret this drawing.

The student will be evaluated according to the number of questions answered correctly of given Blueprint.

A minimum of 85 percent accuracy is required.

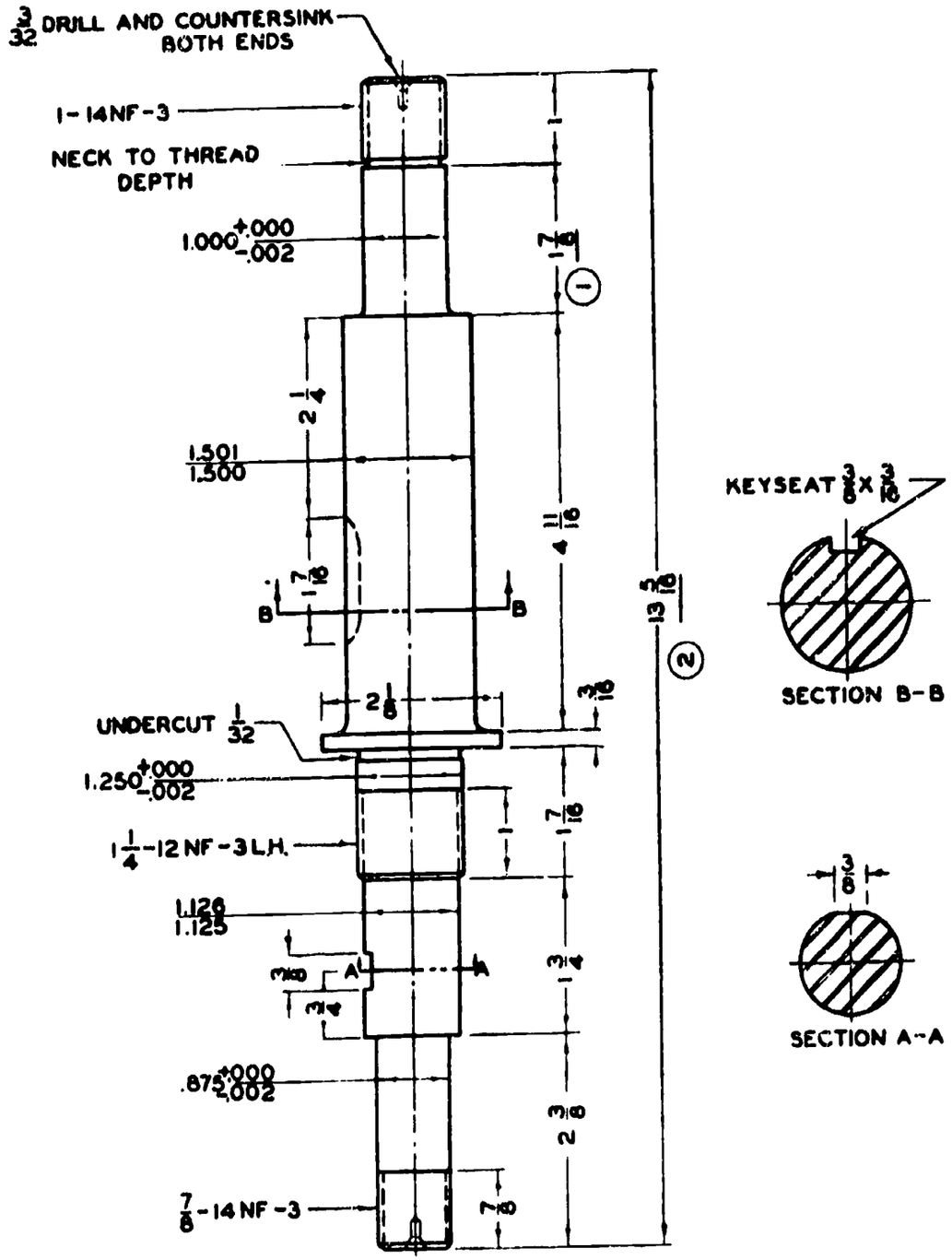

NOTE: ALL FILLETS 1/8 R

CHAMFER STARTING END OF ALL THREADS 30° TO THREAD DEPTH

NO.	CHANGE	DATE	BY
2	WAS 13 1/16	9/22/40	R.C.L.
1	WAS 1 5/8	9/22/40	R.C.L.

QTY.	ORDER NO.	DATE	DWG. BY	CK. BY	APP. BY
42	16-172	[redacted]	J.L.D.	Elein	W.W.R.

SCALE 6=12 MAT. S.A.E. 3135 H.T.

UNLESS OTHERWISE SPECIFIED:
LIMITS ON DECIMAL DIMENSIONS WITHIN ± .005"
LIMITS ON FRACTIONAL DIMENSIONS WITHIN ± 1/64"
LIMITS ON ANGULAR DIMENSIONS WITHIN ± 1/2°

SPINDLE SHAFT

FINISH: BREAK ALL SHARP EDGES

D-20

SPINDLE SHAFT

1. What is the name of the part? _____

2. What is the blue print number? _____

3. What is the material used? _____

4. What is the largest diameter on the shaft? _____

5. What is the overall length on the shaft? _____

6. Starting at the bottom end of the shaft, what are the successive diameters up to the 2-1/8" diameter? _____

7. Starting at the top end of the shaft, what are the successive diameters down to the 2-1/8" diameter? _____

8. At how many places are threads being cut? _____

9. Starting at the bottom, what are the thread diameters along the shaft? _____

10. Specify, for any <u>left-hand thread</u> on the job, the thread diameter and number of threads per inch. _____

11. How many threads per inch are being cut on the 7/8", 1¼", and 1" diameters? _____

12. What class of fit is required on the threads? _____

13. Is this a close fit or a loose fit? _____

SPINDLE SHAFT

14. What is the length of that portion of the shaft which has the 7/8"-14 thread? _____

15. What is the length of the thread cut along this diameter? _____

16. How much clearance is allowed between the last thread and the shoulder on the 7/8" diameter? _____

17. What is the length of the 1.125" diameter? _____

18. What is the upper limit of size of the 1-1/8" diameter? _____

19. What is the lower limit of size of the 1-1/8" diameter? _____

20. How long is that portion of the shaft which has the 1¼"-12 thread? _____

21. What is the length of the 1¼"-12 thread? _____

22. What is the distance from the thread (1¼"-12) to the 2-1/8" diameter shoulder? _____

23. What is the largest size to which the 1.250" portion of the shaft can be turned? _____

24. What is the smallest size to which this can be turned? _____

25. How far is it from the bottom end of the shaft to the shoulder of the 2-1/8" diameter? _____

26. How far is it from the shoulder made by the 7/8" and 1.125" diameters to the center of the flat? _____

SPINDLE SHAFT

27. In section A-A is shown the cut across the shaft at the point the flat is milled. How wide is the flat cut? _____

28. What width of cutter is used in milling the flat? _____

29. How far is it from the bottom end of the shaft to the shoulder formed by the 1.125" and 1.250" diameters? _____

30. What is the thickness of the 2-1/8" collar? _____

31. How far from the top end of the shaft is the 2-1/8" shoulder? _____

32. How long is the 1.500" diameter? _____

33. How long is the 1" diameter? _____

34. What is the length of thread cut on the 1" diameter? _____

35. For what purpose is the 3/16" x 3/8" cut in section B-B used? _____

36. What is the length of this cut? _____

37. How far is this cut from the shoulder of the 1" diameter? _____

38. What is the largest diameter to which the 1.500" shaft can be turned? _____

39. What is the amount of chamfer on each end of the piece? _____

40. What operation cuts below the 1¼" diameter near the collar? _____

TO: Wesley E. Franklin
FROM: Joseph P. Kasztejna
SUBJECT: Criteria for Advanced Placement
RE: April 22, 1988

****

AREA: **MANUFACTURING PROCESSES LAB I**

All course competencies and objectives for Manufacturing Processes Lab I are designed to require the student to absorb theoretical information. Because of the emphasis on theory, I would recommend a comprehensive written test to obtain advanced placement status for this course or study. The questions on this test must be based on the seven course competencies and their objective.

AREA: **MANUFACTURING PROCESS LAB II**

Competencies and objectives for Manufacturing Processes Lab II are both theoretical and practical. I recommend both a comprehensive written test and a practical shop test. The written test should measure the student's ability to identify various machines, machining operations, cutters, holding devices, and measuring instruments use in the machine field. The test should also include blueprint reading, mathematics and safety practices used in the setup and operation of basic machine tools.

The practical test for LAB II should require the student to demonstrate his/her ability to use precision measuring instruments and perform both precision and semi precision layout. The actual machine tool operation part of the practical test should require the student to complete one or two projects that would test his/her ability to setup and operate the following machine tools.

COMPETENCY	MACHINE TOOL	OPERATION TESTED
No. - 3	Lathe	Straight turning, shoulder turning, drilling, angle turning, threading, select tooling, measuring, tool sharpening
No. - 4	Verticl Milling	Align fixtures, attachments and cutting tools; slot cutting; mill to length; mill sides square; drilling with a milling machine.
No. - 5	Grinding Surface	Dress grinding wheel, secure workpiece, perform parallel grinding. setup and grind 90° to parallel surface

As part of the practical test the student should be observed selecting the proper tools and cutters, using proper procedures when setting up machine tools, setting proper cutting speeds and feed rate, and working in a safe and careful manner. The practical test should have an area in its criteria for safety and work habits observed as the student performs the test.

G.E.T. 108 SKETCHING & PRINT INTERPRETATION

PART I - GENERAL INFORMATION

Below are two columns of information, Column A gives terms associated with print reading and Column B provides definitions. On the answer sheet give the letter of the definition that matches the term in Column A.

PART II - MACHINE DRAWINGS

On your answer sheet answer all questions noted.

PART III - WELDING DRAWINGS

On your answer sheet answer all questions noted.

NAME: _____ S.S.# _____

ANSWER SHEET

PART I

1. _____
2. _____
3. _____
4. _____
5. _____
6. _____
7. _____
8. _____
9. _____
10. _____
11. _____
12. _____
13. _____
14. _____
15. _____
16. _____
17. _____
18. _____
19. _____
20. _____

PART II

Section View I _____

Section View II _____

Section View III _____

1. _____
2. _____
3. _____
4. _____
_____
_____
_____
5. _____
6. _____
7. _____
8. _____
9. _____
10. _____

PART III

1. _____
2. _____
3. _____
4. a _____
b _____
5. _____
6. _____
7. Dia _____
Lgth _____
8. Size _____
Qty _____
9. f _____
h _____
10. Inches _____
Type _____
11. _____
12. _____
13. _____
14. _____
15. _____
16. _____
17. a _____
e _____
18. _____
19. _____
20. _____

COLUMN A

PART 1

1. Orthographic Views
2. Dimensions
3. Notes
4. Object Line
5. Hidden Line
6. Threads
7. Extension Line
8. Dimension Line
9. Leader Line
10. Cutting Plane Line
11. Cross Sectioning
12. Assembly Drawings
13. Detail Drawings
14. Auxiliary View
15. Sectional View
16. Tolerance
17. Isometric View
18. Developed Drawing
19. Graphs
20. Single Line Schematic

COLUMN B

PART 1

A. A geometric shape associated with various types of fasteners

B. Values indicating size

C. Contains value and dimensioning distance

D. Bringing a line beyond the object to provide for clear dimensioning and show dimensioning points

E. Positions of an object that are perpendicular to the plane of projection

F. Shows a single unit with contour and size

G. A piping drawing that have all lines in a single plane

H. A technique used to show internal structure of a part

I. Shows the visible shape of an object

J. Represents material being cut by a cutting plane line

K. A drawing providing information of an electrical circuit

L. Points directly to a point of surface to apply a dimension or note

M. The upper and lower limits of a dimension

N. Written information on a drawing applying to an entire drawing or a specific location

O. A drawing that shows relationship between parts

P. A technique used to show description of an inclined or oblique plane

Q. Shows edges and outlines not visible

R. A pictorial type drawing that uses an ordinary scale value

S. Indicates position of view in sectioning

T. A drawing used to represent engineering facts, statistics and/or laws of phenomea

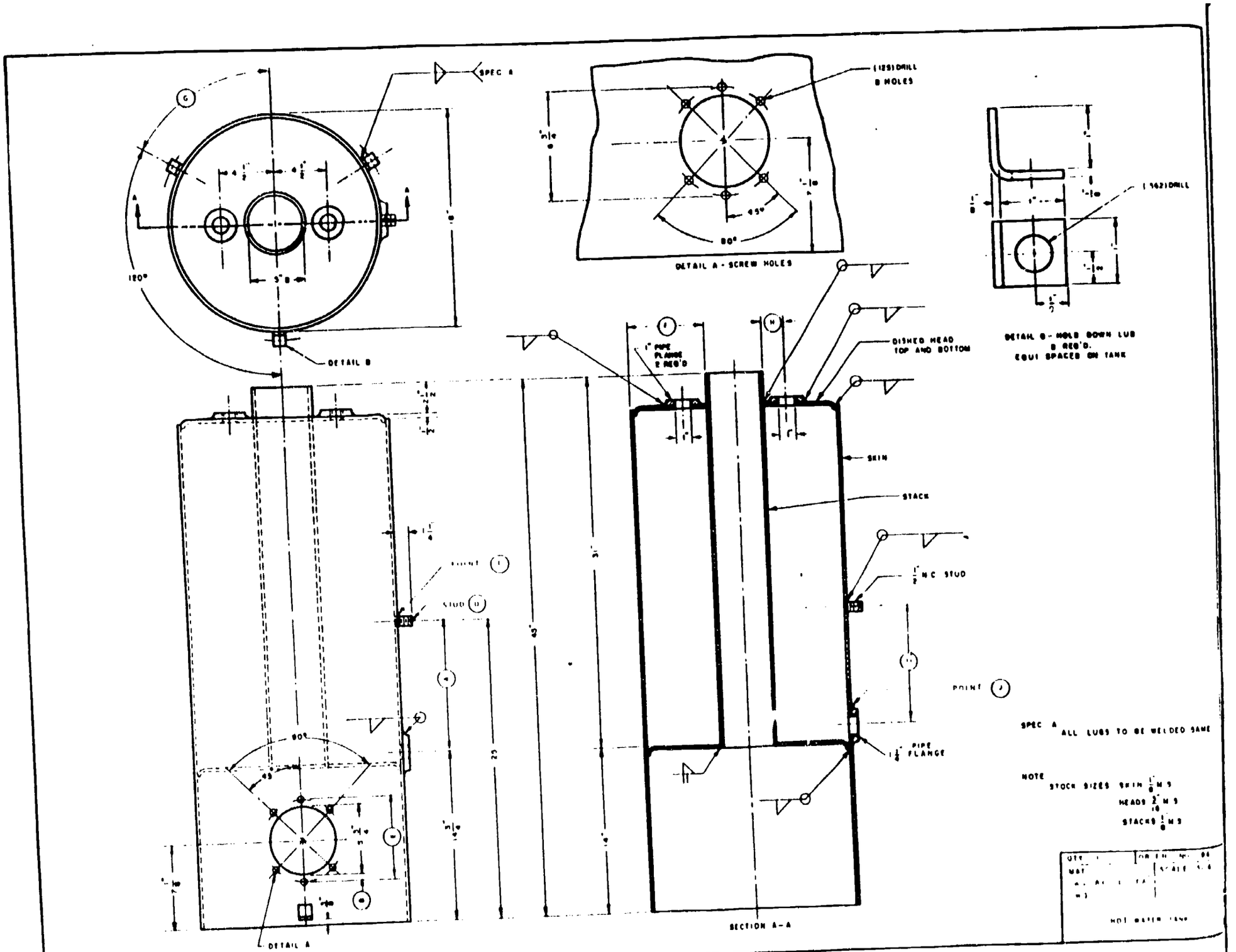

EDITOR'S NOTE: REDUCED PRINT. FOLLOW STATED DIMENSIONS ONLY. NOT TO BE SCALED.

SUMMARY REVIEW NO. 2

A. Refer to the drawing, **Hot Water Tank**, page 94.

1. How thick is the bottom head? _____
2. How thick is the material used in the stack? _____
3. How thick is the skin of the tank? _____
4. Give the dimensions of the sheet required for the
   a. skin of the tank _____ b. the stack _____
5. What type of threaded fittings are used? _____
6. Give the sizes and number of fittings used. _____
7. What is the diameter and length of stud (D) ? _____
8. What size and how many screw holes are used around the large hole? _____
9. What is the size of distance (F) ? _____ of (H) ? _____
10. How many inches and what type of weld is required to join the stack to the head at the top of the tank? _____
11. What type of weld is required at point (J) ? _____
12. What type of weld is used to join the hold-down lug to the tank? _____
13. How many hold-down lugs are there? _____
14. a. Do all these lugs require the same type of weld? _____
15. What is the angle of (G) ? _____
16. What is the distance from the top of the top head to the bottom of the bottom head? _____
17. What is the dimension of (A) ? _____ of (E) ? _____
18. What is the distance from the water-holding bottom of the tank to the bottom of the hold-down lugs? _____
19. How many degrees apart are the hold-down lugs? _____
20. What types of welds are required to join the stack to the bottom of the tank? _____

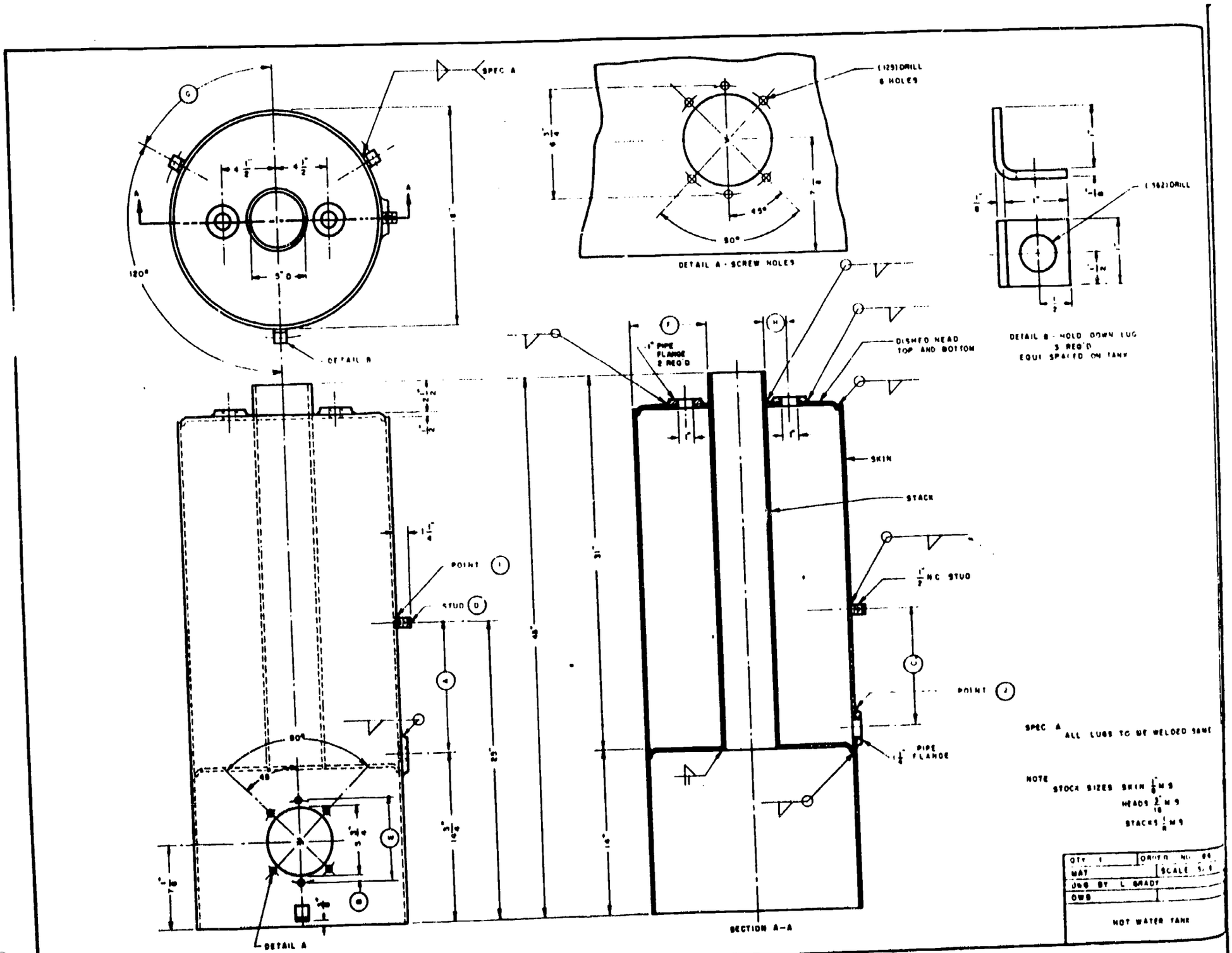

EDITOR'S NOTE: REDUCED PRINT. FOLLOW STATED DIMENSIONS ONLY. NOT TO BE SCALED.

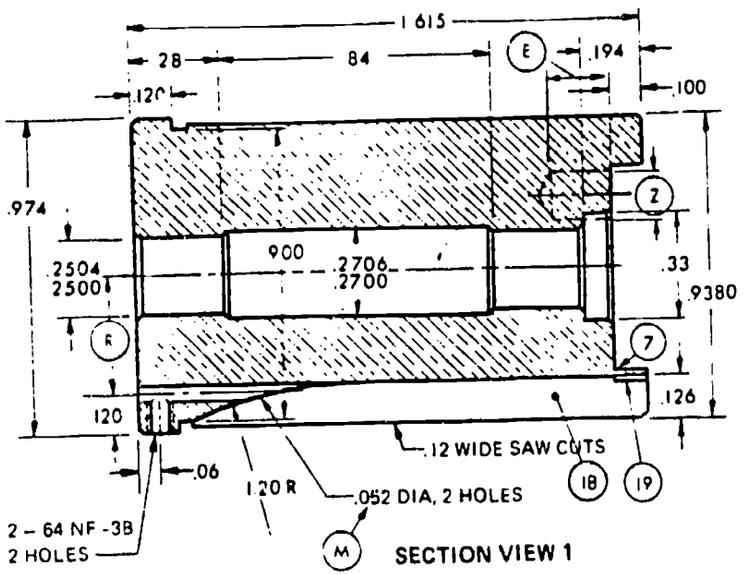

SECTION VIEW 1

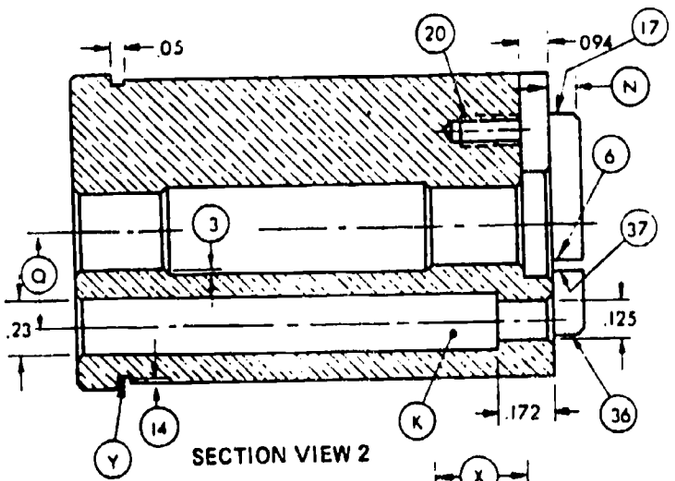

SECTION VIEW 2

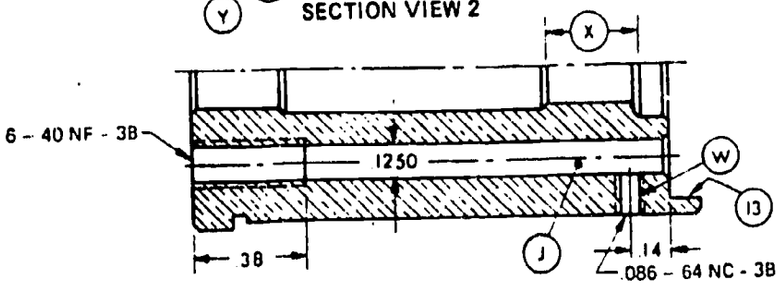

SECTION VIEW 3

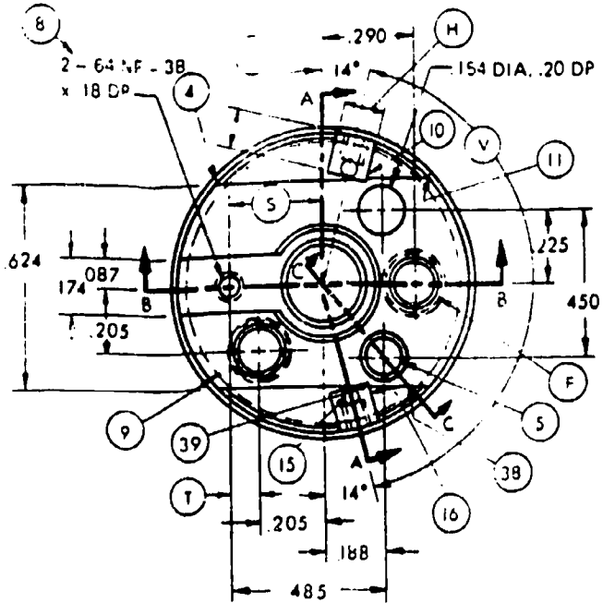

ANSWERS

1 _____
2 _____
3 _____
4 (11) _____
(19) _____
(37) _____
(38) _____
5 _____
6 _____
7 _____
8 _____
9 _____
10 (E) _____

ASSIGNMENT

Label each of the section views with the appropriate titles with reference to the cutting plane lines on the end view.

QUESTIONS

1. What is the diameter of hole (F) ?
2. What is the diameter of hole (Z) ?
3. Identify hole (8) in another view.
4. Locate lines (11) (19) (37) (38) in another view.
5. Determine angle (V) .
6. Locate line (Y) in another view.
7. Determine depth of slot at (14)
8. Determine maximum depth of recess at (3)
9. Locate hole (M) in another view
10. Determine distances (E)

QTY	6
MATERIAL	BRASS
SCALE	2.5/1
DRAWN	DATE
SPINDLE BEARING	A-51

CURRICULUM PLANNING TASK FORCE MEETING
MAY 10, 1988

Discussion of advanced placement criteria resulted in formulation of the following tentative plans and opinions.

D.C. ELECTRICITY

This course had been selected originally as one in which advanced placement might be possible. There seemed to be general agreement that the mathematics background of students from vocational schools and from comprehensive high schools where electronics courses are offered is inadequate to warrant advanced placement in this course. High school instructors stated that their electronics students have a good laboratory background, but the theory and math involved in the D.C. electricity course is such that a student would rarely benefit by exclusion from the course.

There are students, however, who have the lab experience that might be sufficient to exempt them from either <u>all</u> or <u>part</u> of the D.C. experiments.

DIGITAL ELECTRONICS

All participants agreed that this course might be one in which both vocational high school and comprehensive high school students with electronics backgrounds might earn advanced placement.

TECHNICAL PHYSICS

Advanced placement in the technical physics course would be based upon the following criteria:

Successful completion, with an A or B grade, of a course in a recognized, advanced placement high school course, along with at least a B grade on its associated standardized exam. Recommendation of a high school instructor is also required.

TECHNICAL MATH 111

Discussion included the possibility of accepting credit only from advanced placement courses in high school.

In the event that a student has not taken advanced placement courses in high, an alternative method of screening for awarding of advanced placement was explored. It would include the following steps:

1. Interview with counselor/college representative during which the student's background is explored with respect to requirements of the course.
2. Recommendation of the appropriate high school instructor.
3. Demonstration of completion of the prerequisite courses in high school. For example, electronics students must have completed algebra I and II, trigonometry, and physics before being considered for advanced placement in math or electronics courses.
4. Documentation of any relevent experience.
5. Formal testing in the course must result in a minimal score of _____.

ATTACHMENT #3

Advanced Technology Center Brochure

Community College of Luzerne County

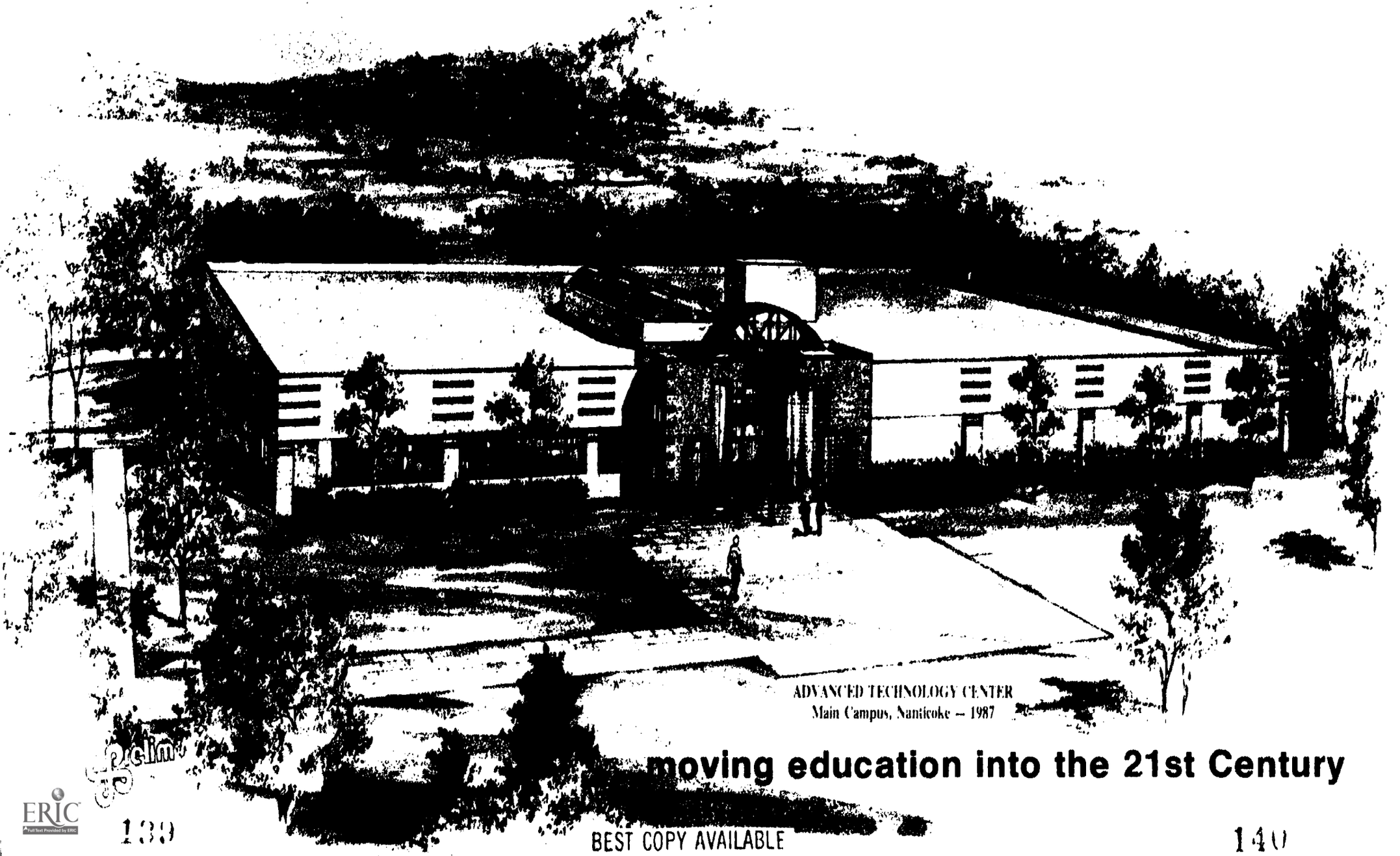

ADVANCED TECHNOLOGY CENTER
Main Campus, Nanticoke – 1987

moving education into the 21st Century

fulfilling our mission . . .

Luzerne County Community College over its two decades of service to the region has developed strong programs in technical-career education and training. Follow-up studies show that the students that have been served by these programs have been well prepared to compete in the region's job market. In a continuing effort to fulfill the College's mission, and to maintain the marketability of our constituents, a major new initiative has been identified. A decision was made in 1986, after an assessment of regional manpower needs and emerging manufacturing process, to expand technical-career offerings into the areas of the advanced technologies to better position the College to support the careers of tomorrow and to foster community and regional economic development.

The intent of this new initiative is to attract new industries and to support existing enterprises which will add to the stability and health of the manufacturing and business communities in Northeastern Pennsylvania.

Fulfillment of this commitment will be accomplished through the development of an Advanced Technology Center (ATC) which will be dedicated to and designed for a wide array of new and upgraded programs that will provide the foundations for careers of tomorrow. ATC programming will be designed to support the identification, selection, and implementation of new technologies. The ATC will play a vital role in economic development by providing companies with a central source for help in applying the new technologies to their operations as well as providing a pool of trained personnel to meet manpower needs. This facility will feature new programs in areas including computer-aided manufacturing, laser-electro optics, computer systems maintenance, computer-assisted design, robotics, computer-aided drafting, automotive technology and broadcast telecommunications.

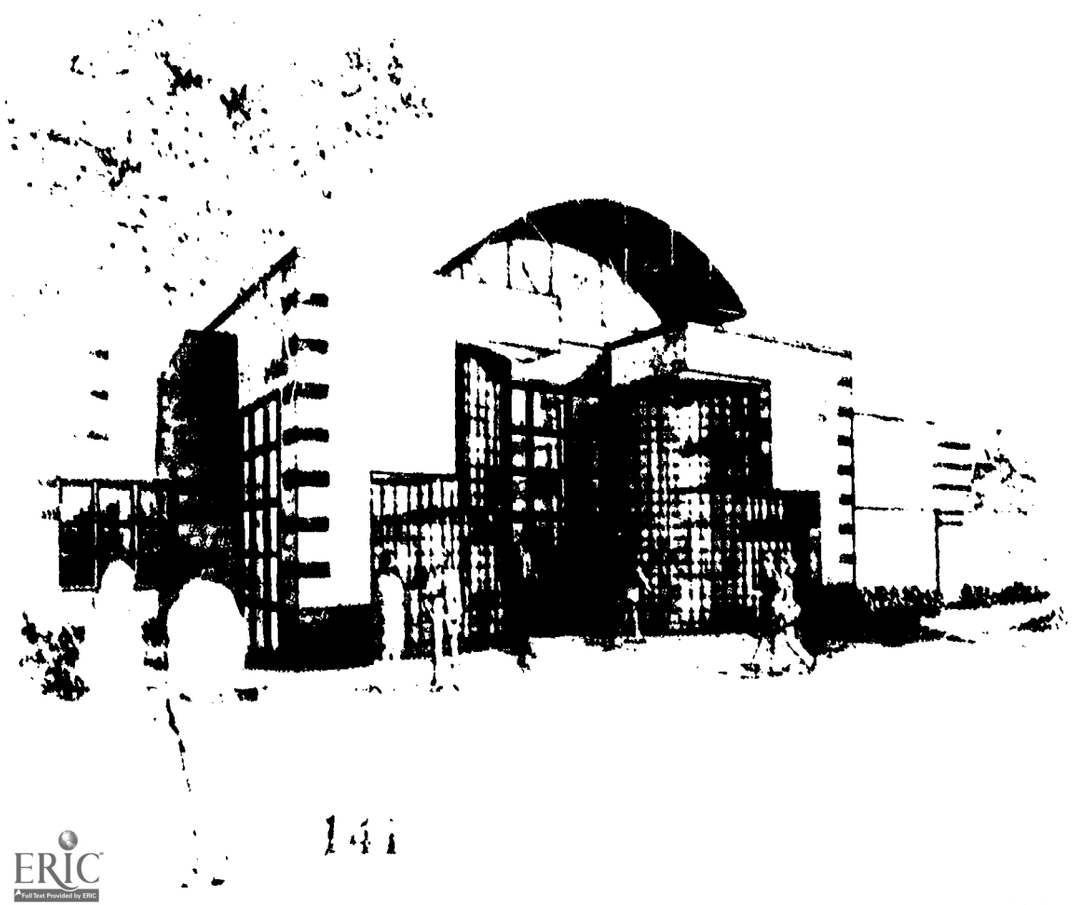

A strong design feature of the ATC will be built-in structural flexibility to respond to manpower needs as currently identified as well as those that will emerge in the future. The ability to eliminate, modify, add, or customize a specific training program within an extremely short time frame is of utmost priority to the College and to the region.

Finally, development of the ATC has grown out of the belief that continued regional economic growth requires government, business and education cooperation. The need to integrate new technical resources challenges all of us to come to grips with new technology and innovation. This new initiative will foster and encourage new partnerships to work together for a better tomorrow.

more than a building . . .

An Advanced Technology Center (ATC), as we should define it, is more than just a building . . . it's a CONCEPT. Involved with the concept are the following elements:

Credit (certificate/degree) program instruction:

- Telecommunications (Broadcast Communications)
- Automotive Technology
- Architectural Engineering Technology
- Mechanical Engineering Technology
- Electrical/Electronics Technology
- Computer Integrated Manufacturing Technology
- Automated Systems/Robotics Technology*
- Computer Assisted Design Technology*
- Computer Systems Maintenance Technology*
- Laser/Electro-Optics Technology
  Computer Numerical Control Technology
- Nuclear Power Technology

* May develop as **options** of other programs.

In the above-listed programs, the objective will be to produce a well-balanced, technical person capable of assisting architects, engineers, and other technology experts in a variety of support functions, to include, for example, designing and maintaining various design and manufacturing systems.

In the individual/business setting, this person will be somewhere on a level between the design and production stages of the manufacturing processes. This person will be the "troubleshooter"- the one with the **practical** knowledge of what needs to act with what in what way to uce a product. Yet, this person will also have enough backgrounds (credits) to pursue advanced degrees, beyond the associate level.

These programs will be primarily competency-based, and will be delivered utilizing a variety of instructional approaches, including inter-active video, and computer-assisted instruction. The pool of available students will include recent high school graduates interested in seeking a degree or certificate, and adults interested in upgrading skills and/or changing careers.

Short-Term training

As technology continues to advance and change, especially in the Northeast corridor (regional scope - 20 county area), short-term training (10 to 25 hr. range) will become increasingly important in order for the private sector to keep employees (especially production personnel) current regarding new processes and new equipment. For the most part, this short-term activity will be of a custom-designed nature . . .a blend of standard pedagogical methodology and innovative delivery approaches with **new** content (subject matter).

The ATC will be the setting for a host of initiatives connected with custom-designed, short-term training . . .especially where equipment manufacturers located outside the region will need to provide training to local manufacturers *as a condition of the sale of equipment*. In this regard, the ATC will become the training site and/or location for equipment manufacturers like Cincinnati-Milicron, Allen-Bradley, Bridgeport, General Electric, etc. to do outreach regionally. The College's role in this process will be to provide space, interface with the training activity, and obtain, as a result (consequence), donated equipment. The spin-offs from this activity, in terms of benefits to the College, are impossible to clearly identify at this writing, but it seems logical to think they will be significant.

Contract Training

As technology advances in our region, the private sector will be in need of specific training to up-grade and advance the skills of employees. Remembering that the Northeast has an **older** work force, it seems logical to assume that rather than engage in union-difficult, lay-off strategies, companies in the private sector will be looking for means to "bail them out" of the problem of re-training with reasonable cost.

Contract training, i.e., educational programming and support services specifically geared to the re-training needs of a particular manufacturing process or company should be the answer to many prayers in the private sector. This type of training will be in the 100 hr. to 500 hr. range, delivered in the ATC and/or on site (of the company) in various fashions—and designed and delivered in such manners as to address an immediate training need, while, at the same time, having application in some manner to existing (degree) programs.

Technology Exchange

While definitely connected to short-term training, this ATC element can be of great significance in providing the setting for existing, regional companies (and local ones) to view and examine new technological advances—the actual equipment, not just pictures or catalog cuts. Displays and exhibitions, either as stand-alone activities, or in conjunction with workshops and seminars (5 hr. to 10 hr. duration) will be important to the development of the ATC as a highly visible community/private sector resource, and important to the educational conference center as a focus for private sector thrusts (fund-raising).

Other Considerations

The Institute has already conducted a very successful "Incubator Without Walls" project under a grant from Sears PDF/KAW-AACJC. The Sears project, as it is affectionately known, has garnered many plaudits and acknowledgements as a unique, effective approach to assisting new, fledgling companies. We need to do more of the same, and this kind of activity can be continued through the application of the ATC concept.

The private sector in our region has many needs . . .and needs to be supported and assisted, especially existing small and moderately sized businesses/companies.

The ATC is more than just a building; it is a jumping-off point for a venture into the future that should be on-going well into the next century. Because of what the ATC is and will do, the very foundation upon which the College was founded—to address the changing needs of the community (with the emphasis on "changing")—this foundation should be bolstered tremendously.

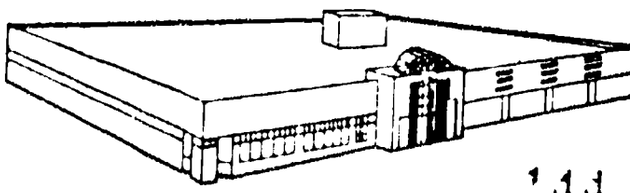

Committed to the introduction of new technology into the workplace, the ATC is both market driven and business responsive. In building and expanding its role as a technology resource, the ATC will carefully focus on an agenda tailored to increasing productivity, improving product quality, enhancing employee skills, and helping Northeastern Pennsylvania companies gain and maintain a competitive status.

The 85,000 sq. ft. Center will offer:

- Comprehensive teleconference facilities.
- Exhibition space for technology systems and demonstrations supported by furnished office and reception suites for customer meetings and business transactions.
- Many individual computer workstations permitting self-paced instruction to support custom-designed training delivery.
- Dedicated computer training labs.
- On-site media support systems.
- Seminar and meeting rooms with audio-visual support.
- Climate controlled manufacturing process lab with 20 stations.
- Fluid Power Lab with 24 stations.
- A robotics lab with three cells featuring the latest automatic machinery.
- Computer Integrated Manufacturing (CIM) lab.
- Computer aided drafting lab.
- Laser lab.
- Six auto-labs.

Here, in one location, businesses can find many of the services needed to integrate modern technology into their operations.

Upper Level

☐ Offices
- Administrative
- Faculty

☐ Technology Training and Demonstration
- Large Group/Demonstration
- Small Group Seminar

☐ Lobby/Display and Exhibition

☐ Broadcast Communications Facility
- FM Radio Station Studio/Control
- Audio Production/Editing
- Video Production/Editing
- TV Production Studio
- TV Production Control

☐ Instructional Laboratories
- Electrical Machines
- AC/DC
- Microprocessor
- Mechanical Drafting
- Architectural Drafting

☐ Restrooms, Elevator, Stairways

☐ Classrooms

Lower Level

☐ Offices
- Faculty

☐ Lobby/Display and Exhibition

■ Instructional Laboratories
- Laser
- Automotive
- Manufacturing Processes
- Computer Integrated Manufacturing
- Computer Aided Drafting
- Fluid Power
- Robotics
- Technical Equipment Service

☐ Classrooms

☐ Receiving, Staging, and Exhibition

☐ Restrooms, Elevator, Stairways

☐ Broadcast Communications Facility

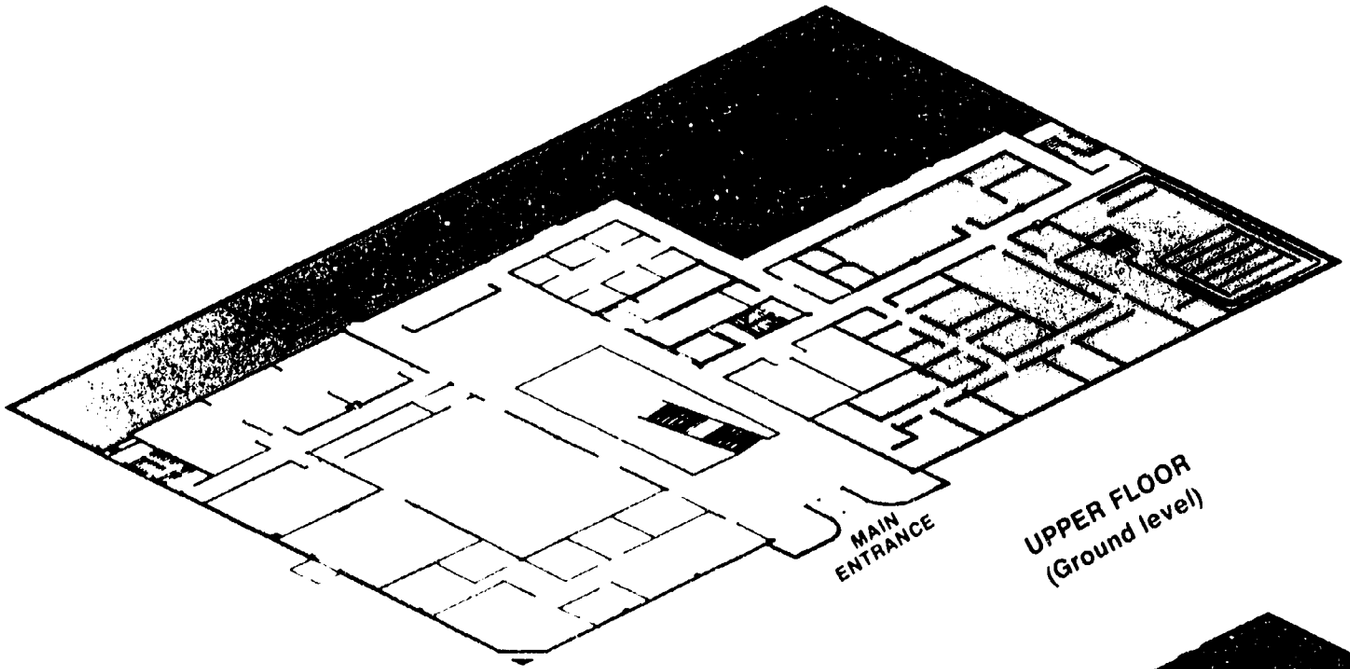

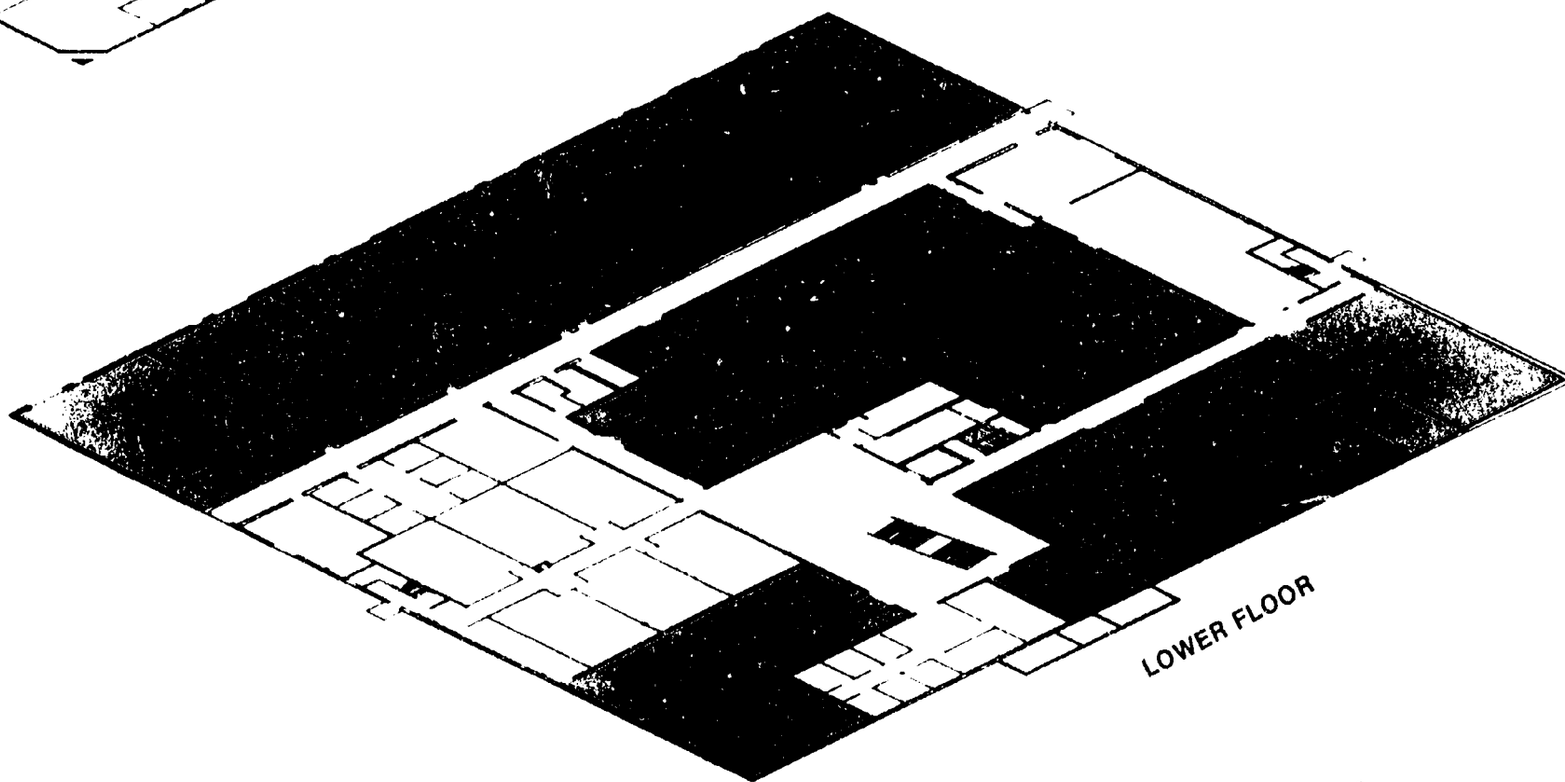

opportunities in high technology . . .

BROADCAST COMMUNICATIONS TECHNOLOGY

This two-year associate degree program utilizes a "hands-on" approach, whenever feasible, to provide the student with a comprehensive understanding of the theory and skills vital in the broadcast medium, as well as the private and corporate communications fields. An emphasis is placed on student competency in the operation of advanced technology equipment in audio and video production, and in the latest computer graphics video system.

AUTOMOTIVE TECHNOLOGY

The Automotive Technology program is a two-year associate degree program which offers both theory and practical experience combined. Students enrolled in the program will acquire a comprehensive understanding of the theory and skills necessary to diagnose, service and repair automotive systems and components utilizing varied computer systems/technology.

ARCHITECTURAL ENGINEERING TECHNOLOGY

The College offers both a one-year certificate and a two-year associate degree program in Architectural Engineering which prepares students for employment opportunities as technicians in the field. In addition to positions with architectural firms, the student may also qualify as an engineering aide, architectural draftsman, assistant surveyor, detailer, building materials and equipment salesman or estimator.

MECHANICAL ENGINEERING TECHNOLOGY

This curriculum is offered in both a one-year certificate or two-year associate degree program and is designed to prepare students for work in industry as an engineering technician, and for advancement to group leader or foreman. The program includes the basics in humanities, social sciences, applied math and physics, and appropriate technical courses.

ELECTRICAL/ELECTRONICS TECHNOLOGY

The Electrical/Electronics Technology program is offered in both a one-year certificate program and a two-year associate degree program. The two-year program emphasizes both the theory and the practical applications of electrical/electronics which is in line with the rapid changes in this extremely diversified field which requires competency in a broad range of fundamentals.

The one-year program enables students to develop the specialized skills necessary to design, install, service, and operate electrical/electronic equipment.

COMPUTER INTEGRATED MANUFACTURING TECHNOLOGY

Both a one-year certificate and two-year associate degree program are being developed for this program which will train technicians for employment in modern computerized manufacturing industries. Such technicians produce production parts by using computer-controlled machine tools and similar sophisticated equipment.

Employment in the field of automated manufacturing is expected to increase faster than the average for all occupations through the 1990's.

AUTOMATED SYSTEMS/ROBOTICS TECHNOLOGY

This two-year associate degree program is designed to provide students with the knowledge and practical experience for electromechanical equipment and controls common to both robotic and automated systems.

COMPUTER SYSTEMS MAINTENANCE TECHNOLOGY

This two-year associate degree program is a specialty concentration within the broader scope of the Electronics Engineering Technology program. The complexity and scope of the internal functions of the microcomputer as well as its wide variety of associated peripherals, instruments and systems, requires high academic capacity as well as technological/manipulative skills.

LASER/ELECTRO-OPTICS TECHNOLOGY

This two-year associate degree program will emphasize the theory and applications of Laser/Electro-Optical technology. A broad based knowledge of electronics, optics, and lasers is required for competency in this emerging technology.

NUCLEAR POWER TECHNOLOGY

This two-year associate degree program is designed to provide technically trained personnel to support the nuclear power industry. The objective of the program is to provide students with a comprehensive understanding of the theory and skills necessary to function in one of the following areas — reactor operations, instrumentation and control, and health physics.

COMPUTER AIDED DESIGN (CAD) TECHNOLOGY

This two-year associate degree curricuum is designed to provide students with a working knowledge of micro and mainframe CAD systems. It also introduces basic and advanced drafting and design done on computers as well as basic programming and automated systems concepts.

COMPUTER NUMERICAL CONTROL TECHNOLOGY

The Computer Numerical Control (CNC) Technology curriculum, which is a two-year associate degree program of study, emphasizes the use of current computerized numerical control and computer aided manufacturing technologies to program machine tools to perform drilling, milling, and turning operations. Instruction emphasizes hands-on skills as well as related information.

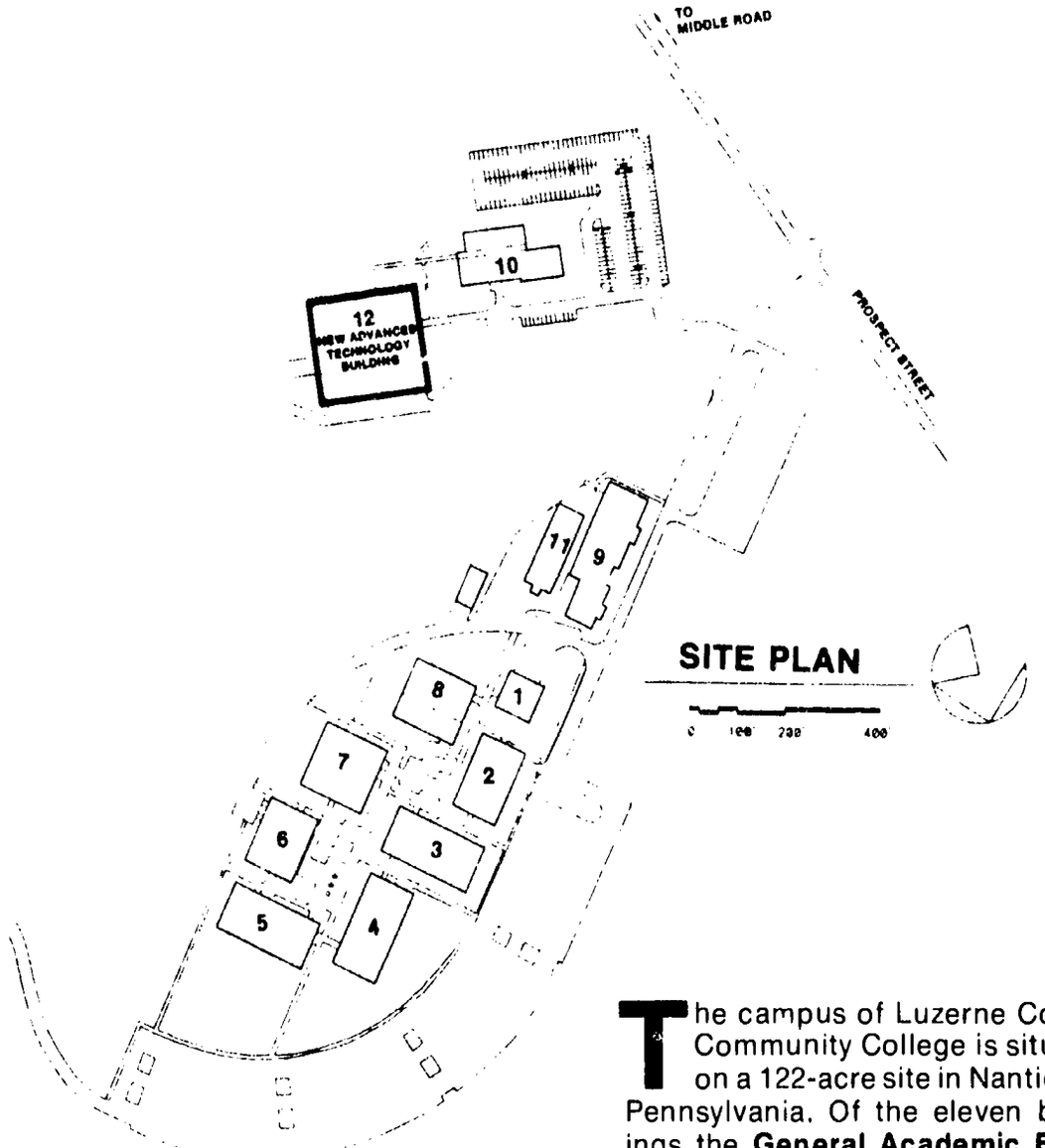

The campus of Luzerne County Community College is situated on a 122-acre site in Nanticoke, Pennsylvania. Of the eleven buildings the **General Academic Building (#4)** and the two **Technical Arts Buildings (#2 and #3)** contain classrooms, laboratories, and faculty offices. Recently completed was the **Medical Arts Complex (#9)**, consisting of a dental arts facility, a nursing arts facility and a multipurpose facility.

The Student Center Building (#7) houses student lounges, a dining-vending area, the College Bookstore, the College Health Office, and student activity offices.

The **Health and Physical Education Building (#8)** includes a two-station gym-

. . .in a perfect setting

The Educational Conference Center has been designed to meet the needs of outside agencies, businesses and organizations for meetings, seminars and conferences. Seven various size seminar rooms and two auditoriums offer the needed flexibility in preparing for a successful learning experience. The attractive, spacious dining area provides for all day or meal-centered activities. All of the latest electronic and communication equipment, including a satellite receiving station, is available.

A professional coordinator and staff are available to answer your every need. The College is pleased to offer its comprehensive conference planning program to area residents at the most reasonable price possible.

Credits

Robert P. Casey, Governor
Commonwealth of Pennsylvania

Thomas K. Gilhool
State Secretary of Education

Luzerne County Board of Commissioners
- Frank Trinisewski, Chairman
- Jim Phillips
- Frank Crossin

Thomas J. Moran, President

John Hosage, D.D.S.
Chairman, Board of Trustees

John M. Beccaris
Dean of Institutional Development and College Project Officer

Pyros and Sanderson
Architect

Sordoni Construction Company
Construction Manager

Board of Trustees
- Albert Wasley, Vice Chairman
- Leonard Falcone, Secretary
- Edward A. Brominski
- Charles J. Bufalino, Esq.
- George Hayden
- Robert Jones
- Joseph Lombardo, M.D.
- Martin L. Murray
- Walter Placek, Ph.D.
- Thomas Stish
- Harold Trethaway
- Michael Turco
- Allan M. Kluger, Esq., Solicitor

Pauline G. Carmody, Assistant to President/External Affairs

LUZERNE COUNTY COMMUNITY COLLEGE

ATTACHMENT #4

Program Brochure

Computer Integrated Manufacturing Technology

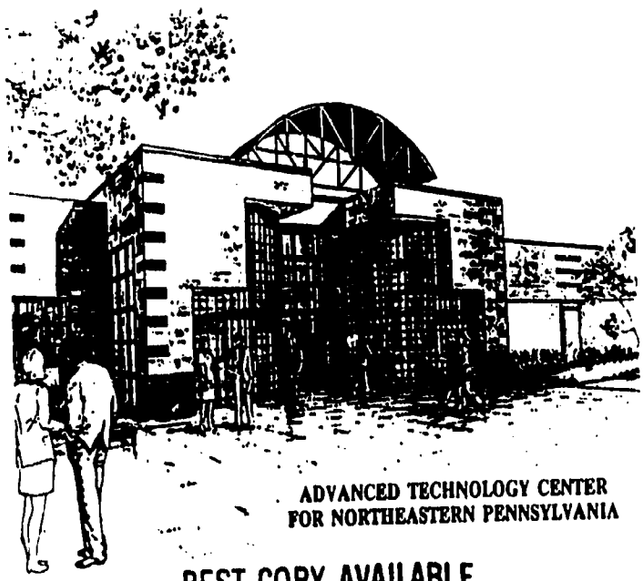

Community College of Luzerne County

. . . moving education into the 21st Century

Computer Integrated Manufacturing Tech.

Enrollment in Luzerne County Community College's Computer Integrated Manufacturing (CIM) Technology program will get you in on the ground floor of a new approach to manufacturing. CIM is among the fastest growing fields with new job opportunities opening every day.

At LCCC, you will learn a range of advanced technologies including Computer Assisted Design, robotics, Computer Aided Manufacturing, fluid power, and programmable logic controllers. You'll learn to design, build, program, manage, and troubleshoot the flexible manufacturing systems that are the heart of the factory of the future. You will know how to tie automated tools together to create a variety of products.

Should you enroll in LCCC's Computer Integrated Manufacturing Technology Program?

If you're interested in troubleshooting, repairing, setting up and managing a manufacturing system, CIM is for you. If you're fascinated by multiple technologies, CIM lets you pursue a variety. You'll study mechanical, electrical, electronic, hydraulic and pneumatic systems. And you'll work on state-of-the-art equipment in the Advanced Technology Center's laboratories.

What are your job and salary opportunities as a graduate of LCCC's CIM Technology Program?

Starting salaries range from $18,000 to $21,200 per year in Eastern Pennsylvania. Experienced technicians average $30,000 per year depending upon background and experience.

Associate Degree Program

1st Semester			*Semester Hours*
ENG	101	English Composition I	3
MAT	111	Technical Mathematics I	5
GET	108	Sketching & Print Interp.	2
GET	121	Manufacturing Processes I	3
IEL	131	D.C. Electricity	4
			17

2nd Semester			*Semester Hours*
MAT	112	Technical Mathematics II	5
GET	234	Intro. Computer Program.	3
GET	122	Manufactur. Processes II	3
CAD	101	Comp. Assisted Design I	3
CIM	101	CNC Machine Tool Set-up/Operation	2
			16

3rd Semester			*Semester Hours*
CAD	102	Comp. Assisted Design II	3
CIM	103	CNC Machining I	3
SPE	125	Fundamentals of Speech	3
PHY	123	Technical Physics I	4
ENG	261	Technical Report Writing	3
HPE		Health/Physical Education	1
			17

4th Semester			*Semester Hours*
CIM	104	CNC Machining II	3
CIM	202	CIM Applications/Projects	3
GET	112	Industrial Safety	1
		Social Science Elective	3
PHY	124	Technical Physics II	4
ASR	207	Fluid Power Applications	3
			17

Other Education & Training Options

Short-term training (10-30 hours), workshops, seminars, and customized training for business and industry are available on a scheduled basis and by request. Call 829-7300 for more information on LCCC's programs.

Please send me information on each category or area of study checked below:

- ☐ Admissions Procedures
- ☐ Advanced Placement Procedures

Advanced Technology Center Programs

- ☐ Automotive
- ☐ Architectural Engineering
- ☐ Automated Systems/Robotics
- ☐ Broadcast Communications
- ☐ Computer Assisted Design
- ☐ Computer Integrated Manufacturing
- ☐ Computer Numerical Control
- ☐ Computer Systems Maintenance
- ☐ Electrical/Electronics
- ☐ Laser/Electro-Optics
- ☐ Mechanical Engineering
- ☐ Other Training (please specify)

_____

_____

Name _____

Street _____

City _____ State _____ Zip _____

Telephone Number _____

_____

NO POSTAGE NECESSARY IF MAILED IN THE UNITED STATES

BUSINESS REPLY MAIL
FIRST CLASS PERMIT NO. 41 NANTICOKE, PA

POSTAGE WILL BE PAID BY:

Advanced Technology Center
Community College of Luzerne County
Prospect Street & Middle Road
Nanticoke, PA 18634-9987

BEST COPY AVAILABLE

Here's How To Apply For LCCC's Advanced Technology Programs

1. You may call 829-7343 or visit the Admissions Office to obtain an application, or go to your local high school guidance office. The Admissions Office at the Community College is located in Building 5 (Administration Building).

2. Have your high school transcripts or GED scores and your completed application for admission sent to the college's Admissions Office.

3. The college will contact you regarding your program of study.

4. An interview is not required, but may be scheduled to obtain additional information. Please call 829-7343 or 459-1600 for more information.

You May Qualify For Financial Aid

At LCCC, several types of financial aid may be available to you. You may apply for federal and state grants that do not have to be repaid. A number of scholarships also are available.

Other options you may want to consider are loans and student employment — both on and off campus. LCCC does not turn students away because of financial need. Let us work with you to make college affordable.

Call LCCC's Financial Aid Office for detailed information at 735-8300, 829-7300, or 459-1600 extension 389.

FOR MORE INFORMATION

Wesley E. Franklin, Executive Director
Advanced Technology Center
for Northeastern Pennsylvania
Community College of Luzerne County
Nanticoke, Pennsylvania 18634-3899

COMPUTER INTEGRATED MANUFACTURING

EQUIPMENT SPECIFICATIONS

1. 15" Geared Head Lathe
2. 13" Geared Head Lathe
3. Vertical Milling Machine
4. Computer Aided Drafting System
5. CNC Turning Center
6. CNC Bed Type Vertical Machining Center
7. CNC Milling Machine (Knee Type)

LUZERNE COUNTY COMMUNITY COLLEGE

15" Geared Head Lathe

Quantity: 2 (Manufacturing Processes Lab)

15" Geared Head Lathe

Lathe, geared head, variable speed, metalworking type, 15" swing, 50" centers, with 7.5 h.p., 208 vac., 3 phase motor, magnetic starter with 110v. to controls. Machine to have 16 geared speeds from 25 to 2000 RPM, universal gear box with 45us threads and 39 metric threads, inch-metric dials on top slide and cross slide, coolant system with selector switch on main panel, pull out chip pan, fail safe electro-magnetic brake for rapid stopping of spindle. All gears hardened and ground, and shafts turn on anti-friction bearings. Unit to have the following features:

Headstock: 6" D1-Camlock type spindle with 2-3/16" hole through spindle. #4 MT centers, with all gears, shafts, and clutches lubricated by pumped bath of oil.
Carriage: 45 longitudinal feeds .0015" - .040", 1-1/4" dia. lead screw, 7/8" dia. feed screw, direct reading inch/metric dials, tapered gibs on cross compound slides and one shot lubrication system for carriage and cross slide ways.
Tailstock: #4 MT with 6-1/8" travel, 1/16" graduations, 2-5/16" spindle dia. with rear lever locking mechanism.
Gear Box: Universal inch metric totally enclosed and automatically lubricated in an oil bath. All gears hardened, all shafts turn on anti-friction bearings.
Speeds: Speeds to be geared directly in 4 ranges with 16 speeds. (A) 25, 33, 45, 60; (B) 30, 108, 140, 190; (C) 260, 350, 470, 625; (D) 840, 1120, 1500, 2000.
Standard Equipment: Electro-magnetic brake, dog plate, two centers, slotted tool block, and threading dial.

CLAUSING/COLCHESTER Model 8031 or equal

Accessories (Total Quantity)
(2) #1025323 Pratt Burnerd 10" 3-jaw Universal Chucks with D1-6" Adapter
(2) #1214423 Pratt Burnerd 12" 4-jaw Independent Chucks with D1-6" Adapter
(2) #15-733 Micrometer Carriage Stops
(2) #15-705 Chuck Guards
(2) #7318 Chip Guards
(1) #15-754 Follower Rest
(1) #15-755 Steady Rest
(2) #7355 #4 MT Live Centers
(2) #1837-1898 0-1/2" Drill Chucks with #4 MT Arbor
(2) Aloris Tool Post w/6 holders; set No. 3 for a 15" Lathe
(2) #15-717 Telescopic Taper Attachments

Total Cost to include delivery, set up (installation) and 4 days training.

MODEL PROPOSED_____

UNIT COST_____ TOTAL COST_____

5/13/88

LUZERNE COUNTY COMMUNITY COLLEGE

13" Geared Head Lathe

Quantity: 2 (Manufacturing Processes Lab)

13" Geared Head Lathe

Lathe, geared head, metalworking type, 13" swing, 40" centers, with 5 h.p., 208 vac., 3 phase motor, magnetic starter with 110v. to controls. Machine to have 16 geared speeds from 30 to 2500 RPM, universal gear box with 45us threads and 39 metric threads, inch-metric dials on top slide and cross slide, coolant system with selector switch on main panel, pull out chip pan, fail safe electro-magnetic brake for rapid stopping of spindle. All gears hardened and ground, and shafts turn on anti-friction bearings. Unit to have the following features:

Headstock: 4" D1-Camlock type spindle with 1-21/32" hole through spindle, #3MT centers, with all gears, shafts, and clutches lubricated by pumped bath of oil.
Carriage: 45 longitudinal feeds .001" - .040", 1-1/8" dia. lead screw, 3/4" dia. feed screw, direct reading inch/metric dials, tapered gibs on cross compound slides and one shot lubrication system for carriage and cross slide ways.
Tailstock: #3 MT with 4-1/4" travel, 1/16" graduations, 1-11/16" spindle dia. with rear lever locking mechanism.
Gear Box: Universal inch metric totally enclosed and automatically lubricated in an oil bath. All gears hardened, all shafts turn on anti-friction bearings.
Speeds: Speeds to be geared directly in 4 ranges with 16 speeds. (A) 30, 40, 54, 72; (B) 98,130,175,235; (C) 320, 425, 570, 770; (D) 1030, 1380, 1860, 2500
Standard Equipment: Electro-magnetic brake, dog plate, two centers, slotted tool block, and threading dial.

CLAUSING/COLCHESTER Model 8105 or equal

Accessories (Total Quantity)
(2) #0825321 Pratt Burnerd 8" 3-jaw Universal Chucks with D1-4" Adapter
(2) #1014421 Pratt Burnerd 10" 4-jaw Independent Chucks with D1-4' Adapter
(1) #13-477 handwheel Collet Chuck
(1) Royal #19421 Set of 5-C Collets 1/16" - 1-1/16" by 1/32"
(2) #13-436 Micrometer Carriage Stops
(2) #13-453 Chuck Guards
(2) #13-455 Chip Guards
(1) #13-471 Follower Rest
(1) #13-472 Steady Rest
(2) #12-510 #3 MT Live Centers
(2) #1837-1898 0-1/2" Drill Chucks with #3 MT Arbor
(1) 7659 - Collet Rack
(2) Aloris Tool Post w/6 holders; set No. 2 for a 13" Lathe
(2) #13-410 Telescopic Taper Attachment

Total Cost to include delivery, set up (installation) and 4 days training.

MODEL PROPOSED_____

UNIT COST_____ TOTAL COST_____

5/13/88

LUZERNE COUNTY COMMUNITY COLLEGE

Vertical Type Milling Machine

Quantity: 2 (Manufacturing Processes Lab)

Vertical Type Milling Machine

Milling Machine, vertical type, floor standing, 96-3/4" long x 63" deep x 82-3/16" high overall, with a 2 h.p., 208 vac., 3 phase motor with magnetic controls providing 110v. to the pushbuttons. Milling machine to have a 9" x 42" table with three T-slots on 2-1/2" centers, 30" table travel (x-axis), 12" saddle travel (y-axis), 5" quill travel, 16" knee travel (z-axis), 12" ram travel, 6-3/4" to 18-3/4" throat distance, and a 2-1/2" minimum table to spindle nose gage line. Machine to include a No. 2J head with a low variable speed range from 60-500 RPM, and a high variable speed range from 500-4200 RPM. Complete with necessary belt and pully guards, wrenches, draw bar, operation and maintenance manuals.

BRIDGEPORT SERIES I with #2J HEAD OR EQUAL

Accessories

(2) Kurt Angle - Lock Vise w/swivel base-6" opening
(2) #2636450 Longitudinal Table Power Feed, installed
(2) Work Light. Light to be internally wired to machine controls
(2) #30 Taper, #1570003 Tooling, to include the following:

(2) Collet Chucks
(2) sets-14 Collets, ranging in size for 1/8" to 3/4" with collet tray
(2) Tool Extension Chuck
(8) Non-Pullout End Mill Collets, 3/8", 1/2", 5/8", and 3/4"
(2) 1" End Mill Adapter
(2) 1/2" Pilot Shell Mill Adapter
(2) Open End Wrenches, 11/16" and 1-1/2"
(2) 15" Rotary Tables
(2) #10625CK Clamping Kits
(2) #2320007 Right Angle Attachment
(2) Digital Readout, with "thin-line" scales, installed.

Total Cost to include delivery, set up (installation) and 4 days training.

MODEL PROPOSED_____

UNIT COST_____ TOTAL COST_____

5/13/88

LUZERNE COUNTY COMMUNITY COLLEGE

TWELVE STATION COMPUTER AIDED DRAFTING SYSTEM SPECS

ITEM	QUANTITY	DESCRIPTION
1	12	CAD WORKSTATION
2	12	GRAPHICS TABLET
3	12	24-PIN DOT-MATRIX PRINTERS
4	2	D-SIZE DRAFTING PLOTTERS
5	1	E-SIZE DRAFTING PLOTTERS
6	1	LASER PRINTER
7	12	POWER DISTRIBUTION DEVICE
8	1	LOCAL NETWORK

TOTAL COST TO INCLUDE DELIVERY, SET UP (INSTALLATION) AND 2 DAYS TRAINING.

Model Proposed_____

per Station Cost_____ Total Cost _____

ITEM #1
(12) CAD WORKSTATION

1. 2 MEGABYTE RAM
2. 80386 CENTRAL PROCESSING UNIT (20 MHZ)
3. 80287 MATH COPROCESSOR
4. 40MB WINCHESTER HARD DISK DRIVE
5. 1.2 MEGABYTE FLOPPY DISK DRIVE
6. HIGH RESOLUTION GRAPHICS CARD (640 X 480) CAPABLE OF OPERATING PULL DOWN MENUS WITHIN AUTOCAD REL.9 w/ADE-3
7. 8 FULL SIZE EXPANSION SLOTS
8. FIVE INTERNAL STORAGE DEVICE SLOTS
9. CALENDER/CLOCK w/BATTERY BACKUP
10. 15" HIGH RESOLUTION COLOR MONITOR CAPABLE OF OPERATING AT 1024-by-768 RESOLUTION NEC MULTISYNC PLUS OR EQUIVALENT
11. TWO SERIAL PORTS
12. ONE PARALLEL PORT
13. ENHANCED KEYBOARD
14. MS-DOS
15. ONE YEAR WARRANTY

NEC DESKTOP COMPUTER (POWERMATE 386) OR EQUIVALENT

ITEM #2
(12) GRAPHICS TABLET (12 X 12) WITH THE FOLLOWING FEATURES;

1. ELECTROMAGNETIC INDUCTION UNDER MICROPROCESSOR CONTROL
2. RESOLUTION -UP TO 1000 LINES PER INCH
3. ACCURACY +/- .025" TYPICAL
4. FOUR BUTTON CURSOR w/.5" PROXIMITY
5. TWO BUTTON STYLUS w/.25" PROXIMITY
6. 9600 BAUD
7. 25 & 9 PIN INTERFACE CABLES
8. UNIVERSAL MOUSE EMULATOR
9. FRONTENAC DESIGNS ADI AutoShade DRIVER SUPPORT

SUMMAGRAPHICS SummaSketch Plus OR EQUIVALENT

ITEM #3
(12) 24-PIN DOT-MATRIX PRINTERS

1. 330 CPS
2. MEDIA HANDLING: SINGLE SHEETS 7.2" to 10.1"
3. 8-BIT PARALLEL STANDARD INTERFACING

EPSON LQ-850 OR EQUIVALENT

ITEM #4
(2) D-SIZE DRAFTING PLOTTERS

1. PLOTTER SPEED: 1-24 ips AXIAL
2. ACCELERATION: 0.5g, 1g, 2G (SELECTABLE)
3. RESOLUTION: 0.0005 IN.
4. ADDRESSABLE RESOLUTION: 0.001", 0.005"
5. REPEATABILITY: +/- 0.002"
6. DRIVE TYPE: SERVO
7. INTERFACE: ASYNCHRONOUS SERIAL RS-232-C, 25 PIN
8. BAUD RATE: 300, 600, 1200, 2400, 4800, 9600 SELECTABLE
9. BUFFER SIZE: 16K (STANDARD), 1MB
10. SIX PEN AUTOMATIC CHANGER

HOUSTON INSTRUMENTS DMP-61 OR EQUIVALENT

ITEM #5
(1) E-SIZE DRAFTING PLOTTER
1. PLOTTER SPEED: 1-24 ips AXIAL
2. ACCELERATION: 0.5g, 1g, 2G (SELECTABLE)
3. RESOLUTION: 0.0005 IN.
4. ADDRESSABLE RESOLUTION: 0.001", 0.005"
5. REPEATABILITY: +/- 0.002"
6. DRIVE TYPE: SERVO
7. INTERFACE: ASYNCHRONOUS SERIAL RS-232-C, 25 PIN
8. BAUD RATE: 300, 600, 1200, 2400, 4800, 9600 SELECTABLE
9. BUFFER SIZE: 16K (STANDARD), 1MB
10. SIX PEN AUTOMATIC CHANGER

HOUSTON INSTRUMENTS DMP-62 OR EQUIVALENT

ITEM #6
(1) LASER PRINTER
1. 8 PAGES per MINUTE
2. 300 X 300 TEXT RESOLUTION
3. 200 SHEET INPUT TRAY
4. ONE INPUT TRAY
5. 100 SHEET OUTPUT TRAY
6. CORRECT ORDER OUTPUT
7. INTERNAL FONTS
COURIER, MEDIUM AND BOLD (10 cpi/12 point, PORTRAIT AND LANDSCAPE) COURIER, BOLD (10 cpi/12 point, PORTRAIT AND LANDSCAPE)
8. 2 FONT CARTRIDGE SLOTS
9. DOWNLOADABLE FONTS
10. UP TO 16 FONTS PER PAGE

HEWLETT-PACKARD LaserJet Series II PRINTER OR EQUIVALENT

ITEM #7
(12) AUTO SWITCHING POWER DEVICE W/FIVE SWITCHED OUTLETS AND ONE BUTTON CONTROL. SURGE SPIKE AND LINE NOISE PROTECTION. STATIC GUARD NAME PLATE AND SWIVEL BASE.

ITEM #8
(1) LOCAL SMART SWITCH/MANUAL SWITCH NETWORK AND CABLING. NETWORK TO CONNECT FOUR WORKSTATIONS TO EACH PLOTTER.

LUZERNE COUNTY COMMUNITY COLLEGE

CNC TURNING CENTER

QUANTITY: 1 LOCATION: CIM LAB.

Description of Minimum Requirements:

Axis Travels (in inches)	
X-Z Axis -	3.937, 7.00
Maximum turning diameter -	7.00
Spindle	
Spindle Nose	American Std. A2-5
Min. Speed Range (RPM)	60-4200
Gear Range	1
Feedrate	
Rapid Traverse X, Z axis	390 IPM
Accuracy	.0001 in.
Feed drives	Ball screw
Cutting Feedrates	.01 -300 IPM
Motors (in horsepower)	
Main Spindle Drive Motor	10 / 7.5 (30 min. cont.) (Var.speed A.C. drive)
Z-axis	2.4
X-axis	1.2
Hydraulic	1.0
Coolant	.24
Turret	
Number of stations	8
Turning tool size	3/4"
B/B Shank	1-1/4"
Clamping force	5,000 lbs.
Control	
Control Manufacturer Required	Fanuc

Control Features

Axis Control

Simultaneous 2 axes control for circular & linear interpolation (X, Z).

Inch /metric selectable.

Closed loop system with full range absolute position feedback by position encoder.

Ball screw pitch error and backlash compensation. Automatic acceleration/deceleration

Programming	Tape format: N4; G3; X,Y,Z,I,J,&K +/-4.4; R&F 4.4; S4; T&M 2; and EOB.
	Main and subprograms possible.
	Maximum programmable dim.:+/-3937"
	Minimum input increment: 1 or .0001" units
	Absolute/incremental programming
	1 machine coordinate system.
	Buffer register
	4-digit S-code direct spindle
	Work coordinate system shift by G code.
	IPM and/or IPR feedrate programming and dwell.
	Rapid Traverse on X, & Z with auto linear acceleration / deceleration.
	Tool offsets minimum 15 pairs, max. +/-99.9999 in.
	Tool nose radius compensation
	Other: Decimal point data input, , direct programming, direct angle programming, program name, block skip (1 set), label skip, control IN/OUT
Data Setting	Pocket calculator type decimal point input
	Entry and punch out of data to/from tape is possible.
Programming Oper.	Management of part programs: Dating, file listing, remaining memory capacity display, program display, timing, initialization, deleting, renaming, memory arranging, copy of program files. Storage 66'
	Tape reader and tape punch interface (RS-232-C). Manufacturer to provide tape reader in control or through interface with portable reader/punch.(Quote separately)
	Radius designation on arc

	Program selection from directory without program name entry.
	Chamfering corner, "R"
	Canned cycles for turning and drilling
Displays:	Monochrome graphic CRT display: on/off switch provided.
	Status indicated by various meters or displays
Automatic Oper.:	Sequence search and mid-start.
	Sequence return and restart.
	Machine operation from memory or MDI (66 ft. tape storage).
	Keyboard type manual data input
	Manual intervention
	Panel switches for dry run, single block. machine lock, feed hold, emergency stop, feedrate and spindle speed override, etc.
Manual Oper.	Rapid traverse and feed capabilities; spindle CW/CCW/Stop/Orientation; turret operation; coolant on/off; etc.
Other Features:	Multi-task Processing: tape store, editing, and tape punch out can be performed while machining.
	Self-diagnostics constantly check operations/programs/machine/controller.
	Water & dustproof NC operation panel.
	Automatic power saving control.
	Automatic power shutoff.
	Operation end lamp.
	Alarm lamp.
	Hour meter: accumulates power ontime and number of parts.

Standard Equip.	Continuous threading (synch. feed)
	6" - 3 jaw countercentrifugal thru hole power chuck with thru hole hydraulic actuator.
	Centralized automatic lubrication system with oil level and pressure warning devices.
	Air cleaner (filter)
	Reference point return manual, automatic
	Pulse handle
	Recognition of EIA or ISO tape code
	Program input of offset amount
	Coordinate system setting and automatic work coordinate system setting
	Program key lock
	Coolant supply system.
	Basic turret tooling kit and hand tools
	Work lamp.
	Programmable tailstock
	Automatic power shut off
	Constant surface speed
	Radius Programming
	Machine adequately guarded against chip and coolant damage.
	Soft limit functions for all axes
	Extreme stroke limit switches on all axes.
	Emergency stop and slide hold pushbuttons and alarm indicator on the operation panel
	Four copies of all instruction, maintenance and operating manuals

---

Warner Swasey WSC-6 with Fanuc 0T-B or equivalent

TOTAL COST TO INCLUDE DELIVERY, INSTALLATION, SET UP, AND TRAINING.

MODEL PROPOSED _____

TOTAL COST _____

LUZERNE COUNTY COMMUNITY COLLEGE

CNC BED TYPE VERTICAL MACHINING CENTER

QUANTITY: 1 LOCATION: CIM LAB.

Description of Minimum Requirements:

Minimum Axis Travels (in inches)	
X-Y-Z Axes -	20.08, 12.99, 15.75
Spindle Nose to table surface -	7.87 - 23.62
Spindle	
Taper	NT No. 40
Min. Speed Range (RPM)	30-4000
Gear Range	1
Feedrate	
Rapid Traverse X,Y axis	630 IPM
Rapid Traverse Z axis	472 IPM
Cutting Feedrates	.01 - 160 IPM
Motor	
Main Spindle Drive Motor	7.5 / 5 (30 min. cont.) (Var.speed A.C. drive)
Automatic Tool Changer	
Tool Magazine Capacity (min.)	16
Tool Selection Method	Memory Random
Tool Shank	CAT 40
Pull Stud	MAS type 2

Control Features

Axis Control	Simultaneous 3 axis control for positioning & linear interpolation (X,Y, Z).
	Simultaneous 2 axis control for circular interpolation (quadrant selection possible)
	Closed loop system with full range absolute position feedback by position encoder.
	Ball screw pitch error and backlash compensation.
Programming	Tape format: N4; G3; X,Y,Z,I,J,&K +/-4.4; R&F 4.4; S4; T,M,H,&D 3; EOB and mnemonic codes (IF,GOTO,etc.).
	Main and subprograms possible.

Maximum programmable dim.:+/-3937"

Minimum input increment: 1 or .0001" units

Inch/metric switchable, by parameter.

1 machine coordinate system.

20 work coordinate systems with absolute, incremental, or combined programming.

4-digit S-code direct spindle RPM command and automatic spindle orientation.

Work coordinate system shift by G.

IPM and/or IPR feedrate programming and dwell.

Rapid Traverse on X, Y, &Z with auto linear acceleration / deceleration.

Cutting feedrate: Maximum 157 IPM with auto exponential acceleration/deceleration.

Tool length and cutter radius offsets minimum 32 sets each, max. +/- 99.9999 in.

Auto override at inside corners and inside arcs in cutter radius compensation mode.

Fixed cycles: G73, G74, G76, G81 to 87, G89 (11 kinds) with return commands for upper limit, specified point, and R point.

User Task 1: Arithmetic operators (+,-,*,/,=), branch command (IF, GOTO, etc.), common/local/system variables.

Other: Decimal point data input , direct programming, direct angle programming, program name, block skip (1 set), label skip, control IN/OUT, plane selection, (G17,G18,G19), mirror image (X and Y), override cancellation, dry run cancellation, single block cancellation, etc.

Data Setting	Setting addition and calculation of tool data, zero offset data, and parameter data.
	Entry and punch out of data to/from tape is possible.
Programming Oper.	Management of part programs: Dating, file listing, remaining memory capacity display, program display, timing, initialization, deleting, renaming, memory arranging, copy of program files.
	Tape reader and tape punch interface (RS-232-C). Manufacturer to provide tape reader in control or through interface with portable reader/punch.
	Reading and writing of NC data using floppy disk.
	Program selection from directory without program name entry.
	Library program: Permits the use of subprograms, G-code macros, etc., in MDI mode of operation.
	All program editing operations are performed with the CRT screen editor.
Displays:	Monochrome graphic CRT display: Tool path can be displayed on graphic CRT screen on/off switch provided.
	Status indicated by 6 LED's.
Automatic Oper.:	Sequence search and mid-start.
	Sequence return and restart.
	Machine operation from memory or MDI (131 ft. tape storage).
	Operation buffer: 262 ft.
	Manual intervention
	Panel switches for dry run, Z-axis command cancellation, machine lock, STM lock, block skip, optional stop, single block, feedrate and spindle speed override, etc.

Manual Oper.	Rapid traverse and feed capabilities· spindle CW/CCW/Stop/Orientation; ATC operation; coolant on/off; etc.
Other Features:	Multi-task Processing: program reading, editing, and tape punch out can be performed while machining.
	Self-diagnostics constantly check operations/programs/machine/controller.
	Water & dustproof NC operation panel.
	Automatic power saving control.
	Automatic power shutoff.
	Operation end lamp.
	Alarm lamp.
	Hour meter: accumulates power ontime and cutting feed ontime.
Standard Equip.	Heat insulation between main motor and the spindle head.
	Centralized automatic lubrication system with oil level and pressure warning devices.
	Air cleaner (filter)
	Pendant operations panel with CRT.
	Pulse handle
	IEC standard compliance
	Taper hole cleaning rod.
	Hand tools and tool box
	Spindle head cooling system.
	Coolant supply system.
	ATC air blower (for spindle hole)
	Chip air blower (nozzle type)

Work lamp.

Chip shield, conveyor, and bucket.

Automatic power shut off

Jack washer

Plug Tool and pull studs (26 ea.)

Machine adequately guarded against chip and coolant damage.

Soft limit functions for all axes

Extreme stroke limit switches on all axes.

Emergency stop and slide hold pushbuttons and alarm indicator on the operation panel

Four copies of all instruction, maintenance, and operating manuals

---

Okuma MC-3VA or equivalent

TOTAL COST TO INCLUDE DELIVERY, INSTALLATION, SET UP, AND TRAINING.

MODEL PROPOSED _____

TOTAL COST _____

LUZERNE COUNTY COMMUNITY COLLEGE

CNC MILLING MACHINE (KNEE TYPE)

QUANTITY: 1 LOCATION: CIM LAB.

Description of Minimum Requirements:

Axis Travels (in inches)

X-Y-Z Axis -	18, 12, 5
Manual Knee Travel -	14.5

Spindle

Taper	#30 Quick change
Min. Speed Range (RPM)	60-4200
Gear Range	1
Clamping	Power drawbar

Feedrate

Rapid Traverse X,Y, & Z axis	200 IPM
Cutting Feedrates	.01 - 200 IPM

Motor

Main Spindle Drive Motor	2 (Variable speed A.C. drive)

Control Features

Axis Control

Simultaneous 3 axis control for positioning & linear interpolation (X,Y, Z).

Simultaneous 2 axis control for circular interpolation (quadrant selection possible)

Servo motor axis drives and encoder feedback

Ball screw drives (x motor on saddle and z motor concentric with the spindle

Programming

Tape format: N4; G3; X,Y,Z,I,J,&K +/-4.4; R&F 4.4; S4; T,M,H,&D 3; EOB

Main and subprograms possible.

Maximum programmable dim.:+/-3937"

Minimum input increment: 1 or .0001" units

Inch/metric switchable

1 machine coordinate system.

	Absolute, incremental, or combined programming.
	4-digit S-code direct spindle RPM command and automatic spindle orientation.
	Safe zone programming
	IPM and/or IPR feedrate programming and dwell.
	Joystick for feed or traverse positioning
	Helical interpolation
	Tool length and cutter radius offsets
	Canned milling and -z- cycles
	Other: Decimal point data input, direct programming, direct angle programming, program name, coordinate transformation, datum shift, rotation, scaling, and mirror image (X and Y), etc.
Data Setting	Setting addition and calculation of tool data, zero offset data, and parameter data
	Entry and punch out of data to/from tape is possible.
Programming Oper.	Management of part programs: Dating, file listing, remaining memory capacity display, program display, deleting, etc.
	Tape reader and tape punch interface (RS-232-C).
	Program selection from directory without program name entry.
	Library program: Permits the use of subprograms, G-code macros, etc., in MDI mode of operation.
	All program editing operations are performed with the CRT screen editor

Displays:	Monochrome graphic CRT display· on/off switch provided.
	X, Y, and Z absolute display
Automatic Oper.:	Automatic tangential approach and corner rounding
	Machine operation from memory or MDI
	Manual intervention
	Panel switches for dry run, machine lock, optional stop, single block, feedrate and spindle speed override, etc.
Manual Oper.	Rapid traverse and feed capabilities; spindle CW/CCW/Stop/Orientation/clamp; coolant on/off; etc.
Other Features:	Multi-task Processing: program reading, editing, and tape punch out can be performed while machining.
	Self-diagnostics constantly check operations/programs/machine/controller.
	Water & dustproof NC operation panel.
	Automatic power saving control.
Standard Equip.	Automatic power shutoff.
	Alarm lamp.
	Centralized automatic lubrication system with oil level and pressure warning devices.
	Air cleaner (filter)
	Pendant operations panel with CRT.
	Electronic handwheel
	Hand tools and tool box
	Spindle head cooling system.

Coolant supply system.

Chip air blower (nozzle type)

Left hand work lamp.

Chip shields, and bucket.

Automatic power shut off

Machine adequately guarded against chip and coolant damage.

Extreme stroke limit switches on all axes.

Emergency stop and slide hold pushbuttons and alarm indicator on the operation panel

Four copies of all instruction, maintenance, and operating manuals

---

Bridgeport Series 1 CNC Interact 1 or equivalent

TOTAL COST TO INCLUDE DELIVERY, INSTALLATION, SET UP, AND TRAINING.

MODEL PROPOSED _____

TOTAL COST _____

BEST COPY AVAILABLE