DOCUMENT RESUME

ED 327 723 CE 056 812

AUTHOR Cropley, Russell, Ed.; Doherty, Susan Sloan, Ed.
TITLE Vocational Education Safety Instruction Manual.
INSTITUTION Alaska State Dept. of Education, Juneau. Div. of Adult and Vocational Education.
PUB DATE 90
NOTE 241p.
PUB TYPE Guides - Classroom Use - Guides (For Teachers) (052)

EDRS PRICE MF01/PC10 Plus Postage.
DESCRIPTORS Accident Prevention; Auto Mechanics; Building Trades; Business Education Facilities; Electronics; Graphic Arts; High Schools; Home Economics; Instructional Materials; Laboratory Equipment; Laboratory Safety; Metal Working; *Occupational Safety and Health; Power Technology; *Program Implementation; *Safety Education; *Safety Equipment; School Safety; Technological Advancement; Trade and Industrial Education; *Vocational Education; Woodworking

ABSTRACT

This manual describes four program areas in vocational education safety instruction: (1) introduction to a safety program; (2) resources to ensure laboratory safety; (3) safety program implementation; and (4) safety rules and safety tests. The safety rules and tests included in section four are for the most common tools and machines used in vocational education programs. The nine categories of tools and machines are: (1) metal working; (2) woodworking; (3) automot - and power mechanics; (4) electronics and construction electricity; (5) home economics safety; (6) business safety; (7) outdoor safety; (8) graphics communications; and (9) technology. Each section contains specific safety instructions for operating certain equipment and is followed by safety test questions. Illustrations are included throughout the text. Ten appendices include copies of a letter to parents, lab safety pledge, blank test answer sheet, machine use evaluation records, accident report form, lab inspection procedures and checklists, inspection report forms, safety test answers, and 19 references. (NLA)

Office of Adult and Vocational Education

Vocational Education
SAFETY INSTRUCTION MANUAL

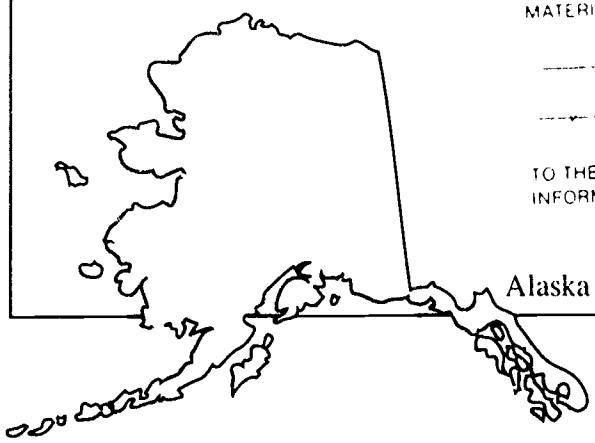

Alaska Department of Education

1990

Vocational Education Safety Instruction Manual

DEVELOPED BY THE ALASKA DEPARTMENT OF EDUCATION,
OFFICE OF ADULT AND VOCATIONAL EDUCATION AND
LEADERSHIP EXPERIENCES, INTERNATIONAL

EDITORS:

RUSSELL CROPLEY
OFFICE OF ADULT AND VOCATIONAL EDUCATION

SUSAN SLOAN DOHERTY, CONSULTANT
LEADERSHIP EXPERIENCES INTERNATIONAL

This handbook was prepared with the support of the U. S. Department of Education funds under the Carl D. Perkins Act, PL 98-524 Copies are available from the Alaska Department of Education, Alaska Vocational Materials Library, P.O. Box F, Juneau, Alaska 99811, (907) 465-4685. This handbook may be duplicated.

Alaska Department of Education 1990

The Alaska Department of Education is an equal opportunity employer and will not discriminate in Department employment, supervision, practices, services or educational programs on the basis of race, religion, color, national origin, age, sex, handicap, marital status, changes in marital status, pregnancy, parenthood, veteran's status, veteran's disability or political affiliation.

DISCLAIMER

The information and materials contained in this publication have been compiled from sources believed to be reliable and to represent the best current opinion on the subject No warranty, guarantee or representation is made by the Alaska Department of Education, Office of Adult and Vocational Education or the State of Alaska or any other contributor to this endeavor as to the absolute correctness or sufficiency of any information contained in this publication The Alaska Department of Education, Office of Adult and Vocational Education and contributors assume no responsibility in connection therewith, nor can it be assumed that all acceptable safety measures are contained in this publication, or that other additional measures may not be required under particular or exceptional conditions or circumstances.

Foreword

There is a great deal of literature available which discusses the problem of fiscal and manpower loss due to accidents and sickness. Not only are there millions of dollars lost each year due to accidents, but the lives of the workers and their families are severely affected.

The lack of good safety practices by industry prompted the Federal government to enact the Occupational Safety and Health act in 1970 This act established a regulatory agency to force industry to provide its workers with a safe place to work.

Vocational Education, if it is to meet the high demands for qualified workers, must reflect the need for basic safety instruction. This instruction must be directed toward the formation of right habits and thinking to the point that these habits become fixed. From the very first introduction to the world of work and its machines, materials and processes, the student must be directed in the development of patterns of good safety habits and thinking. For this reason every vocational education program must include, as an integral part of its curriculum, a strong safety program The instructor must not only teach good safety concepts, but must demonstrate by example proper safety procedures and attitudes.

Most accidents are caused either by improper instruction or by faulty facilities and machinery It is, therefore, of the utmost importance to provide not only good instruction but properly maintained machinery and facilities. It is the purpose of this safety guide to provide the foundation for a positive safety program that will help to develop students that have the right safety habits and attitudes.

Every effort has been made to cover all vocational program areas. If, however, you do not find information on a particular area, please contact the Office of Adult and Vocational Education for assistance

Acknowledgements

This manual reflects the efforts of a numbe. of people. In 1983 the Lower Kuskokwim School District developed a Vocational Education Safety Instruction Manual. Much of the material in this manual comes from that manual. In September ,1989 a task force reviewed various safety manuals from throughout the country, and developed recommendations for material to be included in this manual. Task force members included the following individuals:

Mark Catlin
Industrial Hygienist
Alaska Health Project

Tom Davis
Owner
Thermo-Kool of Alaska

Richard Henderson
Industrial Cooperative Education Coordinator
Hutchison Career Center

Sarah Parks
Home Economics Instructor
Houston Junior/Senior High School

Jeff Trotter
Vocational Instructor
Palmer High School

The task force drew heavily on material from two sources. We wish to thank the following for permission to use information and drawings:

New Jersey Industrial Arts Education Safety Guide, New Jersey State Department of Education, New Jersey Vocational-Technical Curriculum Laboratory

Pennsylvania Industrial Arts/Technology Education Safety Guide, Pennsylvania Department of Education, Technology Education Association of Pennsylvania

We also wish to thank Gregory J. Grebe, an Anchorage attorney, for assistance in reviewing and writing the section on Liability and Negligence, and Jack Doherty for computer consultation and editing of the entire manual

Table of Contents

Table of Contents (Continued)

Introduction to a Safety Program

Objectives of the Safety Program

1. To assist students in becoming safety conscious through direct instruction and teacher example

2. To instruct students in the correct (safe) way of using tools and equipment in order to help them:

    - to acquire a sense of responsibility for their own and others safety
    - to understand that the effective ways of doing things are the safe ways
    - to recognize hazardous situations
    - to use safe practices in their out-of-school activities

3. To instruct students in what to do in case of accident

4. To provide information on general safety rules

5. To provide information on specific safety practices for tools, appliances and machines

6. To develop some means of evaluating student's knowledge, skills, and attitudes towards safety

Purposes of the Safety Program

Safety instruction should be an integral part of every aspect of vocational education instruction This is true for several reasons:

1. Vocational education programs often involve students in activities that, if not conducted properly, could result in severe injury to the students or instructor.

2. Safe work habits will help students to work more efficiently.

3. Safe practices apply to a students' daily living, both in and out of school

4. Proper safety instruction aids in protecting the teacher and school district from legal actions claiming negligence. (See page 4 for discussion of negligence and liability.)

Accident Reduction

Vocational education teachers should design and implement their curriculum to include the following

1 Teach thoroughly the proper and safe use of all machines before letting students use them Demonstration is by far the best method to accomplish safety instruction However, other teaching methods such as audio-visual, safety articles, posters, etc should be used to supplement the initial demonstrations and continuously keep students aware of their safety responsibilities.

2. Repeat demonstrations frequently.

3 Document all safety instruction in lesson plans and grade books.

4. Check frequently to see that students are properly following safety procedures Tests, both written and "hands on", will aid in checking competency and will also assist students to recall safety methods. Keep a file of students' test results.

5 Insure that all machines are properly guarded.

6 Post safety rules at each machine

7 Post general safety rules in the laboratory

8 Supervise personally the student's first attempt to operate machine equipment

9 Insure that no more than one student operates a machine at any given time

10 Maintain machines and equipment in good mechanical condition

11 Assist in preventing students from operating equipment while under the influence of <u>any</u> mind altering drugs (prescription or non-prescription).

Good Housekeeping

Studies by safety engineers have pointed out a definite relationship between the number of accidents in any particular laboratory and the housekeeping conditions of the laboratory In the industrial arts/vocational education laboratory, the teachers have the direct responsibility, in addition to their other duties, for.

1. Establishing and maintaining cleanliness and orderliness

2. Eliminating hazards

3. Developing proper attitudes and orderly work habits of students

Recommended housekeeping practices that are considered essential for the laboratory teacher to implement are:

1. Arranging all equipment to permit safe and efficient work practices
2. Providing for materials and supplies to be safely stored
3. Providing appropriate type and quantity of waste containers
4. Having floors cleaned regularly
5. Properly disposing of combustible waste materials
6. Prohibiting the storage of excess materials and debris on benches in the work areas
7. Conducting regular inspections to maintain clean and orderly conditions
8. Cleaning splash guards and collecting pans of all machines that use oil and coolants
9. Maintaining supply of brooms, bench brushes, shop towels and other cleaning equipment
10. Using housekeeping tools, equipment and supplies properly
11. Reminding students of their responsibility to keep the laboratory clean and orderly
12. Organizing a housekeeping routine which involves all students

A few items calling for further consideration under good housekeeping include the following

NEATNESS.

It is important to have definite places for tools to be kept when not in use Oily rags, waste paper, scrap materials and other flammable materials should be cleaned up daily and placed in suitable metal or other non-flammable containers.

PROPER STORAGE OF MATERIALS.

Materials need to be stored or stacked securely and in such a way as to make them accessible without impairing the security of the stored materials. This calls for suitable storage space and for a careful study of pr per racks, containers, bin lockers, etc. Provisions should be made to adequately store the variety of materials used in school laboratories. Attention should be given to accessibility, lighting and ventilation in storerooms.

MAINTENANCE OF AISLE SPACE:

Adequate aisles should be maintained in all facilities and storage rooms. This aisle space or travel zone can be maintained more readily if the area needed is clearly marked on the floor by painted white or yellow lines. This practice has been found satisfactory in industry and school laboratories A general rule is that main aisles should parallel the flow of materials in process. Main aisles should be four feet (1 2 m) wide Aisles should be kept clear of materials or equipment at all times Tool rooms and emergency equipment should be located off main aisles.

Statement to Parents

Too often parents are not kept informed on the type of work involved in the vocational education program The general safety instructions and safety pledge should be sent out to parents for their signature This form should be kept on file in the school laboratory along with copies of safety tests taken by students (See Appendix A)

Liability and Negligence

THE ABC'S OF TORT LIABILITIES

" Tort Liabilities" may be defined as a group of civil wrongs, other than breach of contract, for which a court will provide a remedy in the form of damages. Tort actions are brought to compensate individuals for harm to them caused by unreasonable conduct of others. Social norms and custom provide the basis for legal precedent in the determination of that which is considered unreasonable or unacceptable conduct

The socially and legally acceptable relationship between two persons may be breached when, by either an act or omission to act, one party causes injury to the other party The word tort is derived from the Latin word "tortus" meaning twisted. In personal relationships, the term "twisted" applies to activity which in some way deviated from a normally acceptable pattern of behavior. Speaking negatively, tort is not a crime, nor a breach of contract, nor concerned with property, nor is it a problem generally falling within the legal realm of governmental operations.

A civil action for tort is initiated and maintained by the injured party for the purpose of obtaining compensation for the injury they have suffered, whereas, in criminal proceedings the action is brought by the state to protect the public from further wrongful acts. Since criminal law does not and was never intended to compensate an injured individual, social justice demanded the birth of the action in tort

ELEMENTS OF NEGLIGENCE

- A DUTY on the part of the actor to protect others against unreasonable risks
- A failure on the part of the actor to exercise a STANDARD OF CARE commensurate with the risks involved
- The conduct of the actor must be the PROXIMATE CAUSE or LEGAL CAUSE of the injury - a causal connection must exist between the act and the resulting injury
- INJURY, ACTUAL LOSS or DAMAGE must result from the act

Every person is negligent when, without intending any wrong, they commit such an act or omits to take such a precaution that under the circumstances they, as an ordinary PRUDENT PERSON, ought REASONABLY TO FORE-SEE that he will thereby expose the interest of another to an unreasonable risk or harm. In determining whether their conduct will subject the interest of another to an unreasonable risk of harm, a person is required to take into account such of the surrounding circumstances as would be taken into account by a reasonably prudent person and possess such knowledge as is possessed by an ordinary reasonable person and to use such judgement and discretion as is exercised by persons of reasonable intelligence under the same or similar circumstance.

YOUR NEGLIGENCE AND LIABILITY
(Or How to Avoid Spending Your Time With a Lawyer)

No one has to tell you that litigation over injuries is a part of modern society It really does not matter whether you think that is a good or a bad thing. Personal injury litigation in the United States was here long before you were born and, in all probability, will be here longer than you. If you would like to avoid the expense, time, and heartache resulting from injury litigation, I have some straight talk for you

This manual has been prepared as an aid in avoiding injuries. The instructions, tests, and other information are like traffic control devices. When you drive your car, if you ignore a red light or a warning and that causes injury to somebody else, you have to pay. Similarly, if your failure to follow safety procedures results in injury, then you would likewise be at fault If you treat warnings and instructions seriously, then you will reduce the chance that you or others will be injured

I have seen people in my office who have lost all of their fingers on one hand, lost the use of a limb, or even lost a loved one as a result of people failing to follow safety instructions or their refusal to use safety devices provided by the manufacturer While in some cases injured parties may have the right to sue someone else, I have never seen an injured person who is happy about the prospect of trading a healthy body for a lawsuit.

While you may not be able to prevent other people from injuring themselves, you can and should do everything you can to make the prevention of injury a serious business If you don't, you may well end up in litigation that will take away your time, your money, and your peace of mind.

Specifically, I would advise you to use this manual This material is provided for your protection If you do not use it, you have no one to blame but yourself In addition, just because you have used a piece of equipment for a number of years does not mean that you know how to use it correctly. I have seen experienced workers who thought they could remove bladeguards or tie off safety devices or by-pass manufacturers' instructions They were wrong. They paid dearly for their over confidence or inattention to safety instruction. Don't be like them

Accidents cannot be completely eliminated However, if you treat this manual seriously, you will have gone a long way toward preventing injury to yourself or others You will also have increased your chances of doing what you want with your time, instead of spending it with me

Signed,

Anonymous Personal Injury Lawyer

Resources to Assure Lab Safety

OSHA

The Federal Act called the " Occupational Safety and Health Act of 1970 " is intended to " assure, so far as possible, every working man and woman in the nation safe and healthful working conditions and to preserve our human resources."

The Act applies to every employer engaged in a business affecting commerce who has employees The law applies in all fifty states and all territories of the United States Federal, State and local employees are specifically excluded from coverage, but they may be covered by equally effective requirements

Each employer under the Act has the general duty to furnish each of their employees places of employment, free from recognized hazards causing or likely to cause death or serious physical harm and the employer has the specific duty of complying with the safety and health standards under the Act Each employee has the duty to comply with these safety and health standards and all rules, regulations, and orders issued pursuant to the act which are applicable to their own conduct and actions

HOW OSHA RELATES TO TEACHERS.

Regulations promulgated under the authority of OSHA set forth detailed standards in respect to almost every conceivable activity Some of the standards apply only to certain stated industries and are generally referred to as "vertical" standards As an example, the construction industry has a specific set of standards with which it must comply. A school or its faculty would not normally be concerned with these special "vertical" standards. However, the Act does regulate a myriad of activities and situations which apply to all industries or occupations generally. These regulations are often referred to as "horizontal" standards, and are equally applicable to the activities of colleges, universities, school, and other professions and industries.

Until this point the penalties provided are for violations by an employer, and the logical question arises as to whether a member of the faculty of an educational institution is considered under any circumstances as an employer Unfortunately, procedures under the act have not been sufficiently developed so that an exact determination of who the responsible party would be in a criminal prosecution cannot be forecast The imminent danger section of the Act refers to a "work place under your ownership, operation or control " Conceivably, therefore, the act could be interpreted to provide sanctions against a faculty member where the violation occurs in an area under the control of that faculty member

An equally unanswerable question is whether an injury to a student could result in criminal sanctions under the Act. By its terms the Act is designed for the protection of employees and a strict construction would not include students in that category However, until further judicial interpretation of that Act is made, these questions must, at the present, remain unanswered.

The greatest significance of OSHA regulations for faculty members is in the area of civil actions for personal injuries where it is alleged that failure to comply with OSHA regulations constitutes negligence Cases of this nature may arise where required protective devices are not provided on machinery used by students, or others, under the supervision of a faculty member. Other situations of potential liability may arise from failure to comply with standards as to individual protective equipment, chemicals, electrical apparatus or conceivably even as to housekeeping in classrooms or laboratories It seems, therefore, that it would be to the advantage of teachers to familiarize themselves with OSHA as well as other state and municipal regulations pertaining to instrumentalities and activities under their control

In summary, the faculty immunities of yesterday are fast disappearing and the general rules of liability are increasingly applicable to members of the academic community. Teachers must be aware of the fact that they are liable not only for their own acts or failures to act, but in many cases may be personally responsible for the acts of others who may be under their control or supervision

Facilities Planning

There are many factors which impact the planning of the physical facilities for vocational education programs. One of the most obvious considerations is the safety of the students and the instructional staff Many accidents, injuries, fires, and occupational illnesses can be avoided by or minimized through careful planning.

The following information has been condensed from the U.S Department of Health and Human Services 1981 publication "Safety and Health for Industrial/Vocational Education."

1 The amount of space which should be available for shop or lab work should not be less than 55 square feet (5.1 square meters) for each student.

2 To avoid problems in supervision and arrangement, the length to width ratio of the shop or lab facility should be no more than two to one.

3 For good lighting and ventilation, the window area should not be less than one fifth of the area of the floor

4. Ceiling heights should be between 10 5 and 14 feet depending on the nature of the activity

5 To the degree possible utilities such as water, air, gas, electricity, etc should be inside the floors and walls to facilitate cleaning.

6. Consideration should be given to providing a large open area for assembly, activities and projects which take up more space.

7 Floor covering materials should be compatible with the activity, and should allow for easy cleaning and maintenance.

8. Load bearing capacity of floors should be considered prior to purchasing equipment. To be safe floor structures should have a weight bearing capacity of at least four times the static load and six times the moving load.

9 Main aisles should be clearly marked with yellow or white lines and should be four feet wide

10. Emergency equipment, supply and tool rooms should be adjacent to main aisles

11 Size and location of doors and exits should facilitate fire or emergency conditions They should conform to OSHA, National Fire Protection Association (NFPA) Building Exit Codes and local and state requirements

12 Size and location of exits generally depend on building occupancy.

a High hazard activity, no person more than 75 feet from an exit.

b. Medium to low hazard activity 100 to 150 feet is acceptable.

"NFPA standard #101 specifies that access to exits provided by aisles, passageways, or corridors should be convenient to every occupant and that the aggregate width of the passageways and aisles should at least equal the width of the exit."

13. All shops should have at least two exits, one of which is wide enough to accommodate the largest project or activity anticipated.

21. More fires are caused by electrical malfunction than by any other cause. Planners should be familiar with the National Electrical Code, NFPA 70-1971, ANSI C1-1971. There should be regular inspection for compliance.

a. Each means of disconnection (e.g., circuit breaker or fuse box) must be legibly marked to indicate its purpose unless its purpose is evident.

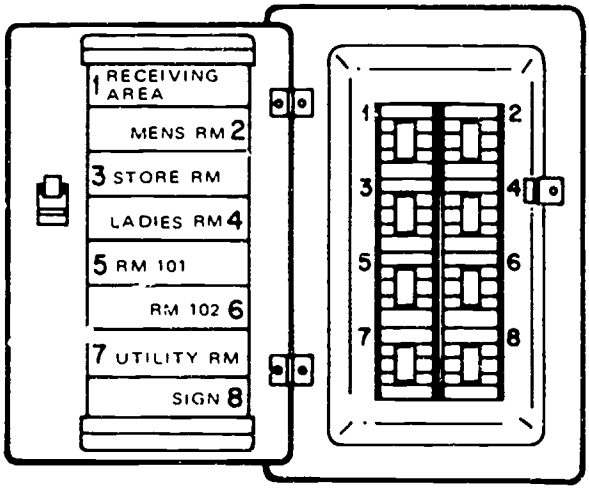

Proper labeling of circuit breakers.
Reprinted from *Health and Safety Guide—Automotive Parts Recyclers* (Cincinnati: NIOSH, 1976), p. 66

b. Frames of electrical motors, regardless of voltage, must be grounded.

c. Exposed noncurrent-carrying metal parts of fixed equipment that may become energized under abnormal conditions must be grounded under any of the following circumstances:
- in wet or damp locations
- if in electrical contact with metal
- if operated in excess of 150 volts to ground in a hazardous location

d. Exposed noncurrent-carrying metal parts of the following plug-connected equipment, which may become energized, must be grounded or double insulated and distinctly marked:
- portable, hand-held, motor-operated tools
- appliances
- any equipment operated in excess of 150 volts to ground

e. Outlets, switches, junction boxes, etc. must be covered.

f. Flexible cords may not be:
- used as a substitute for fixed wiring
- run through holes in walls, ceilings or floors
- run through doors, windows, etc.
- attached to building surfaces.

g. Flexible cord must be fastened so that there is no pull on joints or terminal screws. It must be replaced when frayed or when the insulation has deteriorated.

h. All splices in electrical cord must be brazed, welded, or soldered or join the conductors with suitable splicing devices. Any splices, joints, or the free ends of conductors must be properly insulated.

The shop planner must consider that quantity and quality of illumination required for various tasks, the problem of glare and the replacement of specialized lighting equipment in hazardous areas. The current minimum levels of illumination for industrial areas as recommended by the Illuminating Engineering Society (IES) are given in ANSI/IES RP-7-1979. The following table illustrates the quantity of illumination required for various tasks likely to be performed in industrial/vocational education shops.

Recommended Footcandles on Tasks

The following recommendations represent the minimum on the task at any time for young adults with normal and better than 20/30 corrected vision.

Task	Footcandles
Forging	50
Foundry work	
Annealing (furnaces)	30
Core making	
Fine	100
Medium	50
Pouring	50
Garages (auto shop)	
Repairs	100
Active traffic areas	20
Machine Shops	
Rough bench and machine work	50
Medium bench and machine work, ordinary automatic machines, rough grinding, medium buffing and polishing	100
Fine bench and machine work, fine automatic machines, medium grinding, fine buffing and polishing	500*
Extra-fine bench and machine work, grinding, fine work	1000*
Paint shops	
Dipping, simple spraying, firing	50
Rubbing, ordinary hand painting and finishing art, stencil and special spraying	50
Fine hand painting and finishing	100
Extra-fine hand painting and finishing	300*

Task	Footcandles
Printing and photoengraving	
Printing	
Color inspection and appraisal	200*
Machine composition	100
Composing	100
Presses	70
Proofreading	150
Photoengraving	
Etching, staging, blocking	50
Routing, finishing, proofing	100
Tint laying, masking	100
Sheet metal shops	
Miscellaneous machines, ordinary bench work	50
Presses, shears, stamps, medium bench work, spinning	50
Punches	50
Tin plate inspection (galvanized)	200**
Scribing	200**
Welding	
General illumination	50
Precision manual arc welding	1000*
Woodworking	
Rough sawing and bench work	30
Sizing, planing, rough sanding, medium quality machine and bench work, gluing, veneering, coopering	50
Fine bench and machine work, fine sanding and finishing	100

*The recommended footcandles may be obtained by a combination of general lighting plus special supplementary lighting. Care must be taken to design and install a system which not only provides sufficient light but directs and diffuses the light and protects the eyes. Insofar as it is possible, glare (both direct and refected) and objectionable shadows should be eliminated.

**In such tasks, the mirror like surface of the material means that special care must be taken in selecting and placing lighting equipment and/or orienting the work to reduce glare.

Adapted from ANSI/IES RP 7 1979, American National Standard Practice for Industrial Lighting, pp 11-16

Safety Program Implementation

Introduction

The first objective of a safety program in school shops and laboratories is immediate and urgent - to prevent accidents which might result in injury or harm to students, teachers or other school personnel or visitors, damage to facilities and equipment, or interruption of the educational processes This objective goes into operation on the opening day of any new vocational education program.

It is known that zeroing in on accident totals in the vocational labs of the nation's schools is difficult Current and reliable findings which deal specifically with accidents in industrial arts and vocational education are often localized and somewhat limited. However, a survey by the National Safety Council of 57,000 school jurisdictional accidents among male youth revealed that industrial arts and related activities ranked fifth highest in accident frequency among fifty-three school activities. Further, a state-wide accident survey in Ohio revealed the following facts concerning student injuries in industrial arts classes (National Safety Council, Data Sheet Number 70, Coordinating Accident Prevention in Industrial and Vocational Education Programs):

1. The most common type of injury is a laceration, followed by burns and scalds, contusions and bruises, foreign materials and punctures

2 A student is more likely to be struck by something rather than caught in, on or between objects.

3. The parts of the body injured most frequently by students are the fingers, hands, eyes, feet and forearms.

4 Fifteen-year-olds are involved in the most accidents followed by 16, 17, 18 and 14-year-olds

5 Most accidents occur in October and November, the least number occur in May and June

6 Students with one to four months of shop training have the highest frequency of accidents Students with 13 to 16 months have the lowest.

7 More accidents occurred in the woodshop than any other area Next in order were general shop, machine, welding, sheet metal, auto and graphic arts.

8 More accidents were caused by the hand saw than any other device Next was sheet metal stock, then the metal lathe, chisels, wood lathe, wood jointer, grinders, welding equipment, metal drills and circular saw.

9. Many accidents are attributed to workers behaving irresponsibly

It is apparent that much emphasis has been placed on accidents and their related causes This emphasis tends to suggest that accidents occur in a specific frequency or pattern such as time of day, day of the week, and month of the year. The responsibility for accidents has been placed on age, area of work, type and condition of tools, and the experience of the student It should be emphasized that accidents will continue to occur whenever unsafe acts or unsafe physical conditions exist

Goals for a Safety Program

The following outline deals with three fundamental areas: the teacher, the shop laboratory and the student. Under the three basic areas are listed specific areas and suggestions for implementation of safety standards.

A. THE TEACHER - GOALS *

1. Establish a Safety Policy and implement OSHA regulations
2. Provide for Safety Inspections as outlined in this handbook.
3. Provide a safe environment.
4. Delegate authority and involve all students in the safety program.
5. Provide training.
6. Investigate accidents.
7. Maintain records using the safety forms provided in this handbook.

B. THE LABORATORY - GOALS *

1. Eliminate mechanical and physical hazards:
   - Maintain safe working surfaces to prevent slips and falls.
   - Install guarding on all machinery.
   - Use safe materials and handling methods.
   - Maintain tools and equipment in good working condition.
   - Maintain good housekeeping.
   - Ground and control electricity to all power equipment.
   - Provide "ground fault interrupt" switch on all electrical equipment.
2. Eliminate environmental and chemical hazards:
   - Provide personal protective clothing and equipment.
   - Control air contaminants including radiation.
   - Establish noise control measures.
   - Control toxic substances and chemicals.
   - Control temperature and humidity.
   - Maintain adequate illumination.

C. THE STUDENT - GOALS *

1. Supervise students

2. Stimulate interest:

- Establish a safety committee and involve students with program implementation
- Provide incentives to students.

* These categories are to be used as tools in the development of a priority list for the development of safety standards in the vocational program. Priorities may be placed on items that have proven to be trouble areas in the past history of the program.

The first priority categories should be those that are imminent or serious violations as determined by initial inspections.

Implementation Procedures

The following are suggested procedures for the implementation of the safety program

1. Select those rules and tests from this manual that apply to your vocational programs Make up a set of safety rules booklets and a set of safety test booklets with all of the rules you have selected in one and the tests in the other. Make enough for one for each student in a class (a class set)

2. Duplicate the answer sheets found in Appendix C .

3. Duplicate enough of the parent letters (Appendix A) for each of your students There is room at the top of the sample letter to include the name of the school or the school letterhead.

4 Post a copy of the safety pledge (Appendix B), and a copy of the general safety rules near the entrance of the shop.

5 Post a copy of the safety rules for each machine tool at or near that machine. (Paste the rules to a piece of heavy cardboard or masonite. coat it with varnish, and fasten it to the machine near the on-off switch.)

6. At the start of the school year, and with each new student that enters the class:

   a. Review the general shop safety pledge (Appendix B) and have the student sign it

   b. Review the parent letter (Appendix A) and have students take it home and review it with their parent(s) or guardian(s); have them sign and return it to the school.

   c. File both of these documents and indicate in the record book that they have been received.

d. Review the general safety instructions with each class and administer the general safety test.

e. File the completed tests and indicate in the record book those who score 100%

f. Re-test those who fail the test after they have reviewed the rules on their own.

7 As new machine tools are introduced to the students:

a Review the safety rules for that machine

b. Demonstrate the safe use of the machine

c. Administer the test for that machine

d File and record the names of all those who score 100%

e. Re-test those who failed after they have reviewed the safety rules for that machine

f. Have the students demonstrate that they know how to operate the machine.

Record Keeping

OSHA requires employers (teachers) of eight or more employees (students) to keep certain records of job related fatalities, injuries and illness OSHA requires that only three simple forms be maintained It will be necessary for teachers to penodically evaluate these forms in order to correct situations that have proven to cause accidents.

1. OSHA 100 - is a log on which each reportable case is entered on a single line

2 OSHA 101 - is a supplementary record with details on each individual case.

3 OSHA 102 - is an annual summary compiled from the log This summary must be posted in the workplace by February 1 of each year, and kept there one month for employee (student) examination.

4. OSHA SAFETY POSTER - should be posted in such a manner that it may be easily read by all students.

If there are no recordable deaths, injuries or illnesses, there's nothing to fill in All employers (teachers) with eight or more employees (students), must have the forms available when an OSHA compliance officer makes an inspection. The forms do not have to be mailed to any OSHA office.

Safety Inspection

A safe environment is an essential part of the school lab safety education program. The safe environment will exist only if hazards are discovered and corrected through regular and frequent inspection by school personnel, administrators, teachers and students Safety inspections are to determine if everything is satisfactory

Inspections may be made at the request of the board of education, the school administration or upon the initiative of the teacher In any respect, the teacher will be responsible for satisfying OSHA standards and reporting to the proper school officials on recommendations for correcting violations. This inspection check list should be used in any shop inspection, the inspector should then refer to the specific shop inspection lists contained in this handbook for a more strict procedure and items to be checked in a more specific manner

When to Inspect. As a minimum, a safety inspection should be made at the beginning of every school term or semester More frequent inspections may be advisable

Who Inspects. This will depend on local policies It is recommended, however, that lab teachers and students participate in making regular inspections This not only tends to share responsibility but stimulates a broader interest in the maintenance of a safe school lab

How to Inspect.

1 Inspections should be well planned in advance

2 Inspections should be systematic and thorough

3 Inspection reports should be clear and concise, but with sufficient explanation to make each recommendation for improvement understandable

Safety Rules and Safety Tests

Note. The safety rules and tests which are included in this section are for the most common tools and machines which are used in vocational education programs. If you are operating a program which involves the use of a machine or tool which is not included in this section, contact the Office of Adult and Vocational Education at 465-4685 for assistance. Every effort will be made to provide an appropriate set of safety rules and a corresponding safety test for the machine or tool.

General Safety

General safety instructions for students which apply to all areas of industrial education and cover lab practices, hand tools, and machine tools are as follows;

SAFETY TESTING:

Although sample safety tests are provided in this manual, it is expected that each teacher will make up a series of tests on general safety rules and on individual power machines if equipment in their facility is not covered in this handbook. The teacher should make it clearly understood that no student will be given permission to operate power machines until such time as he has successfully passed all safety test requirements. It is absolutely necessary that the teacher demonstrate, in detail, the do's and dont's in the operation of each piece of equipment.

Contact the Office of Adult and Vocational Education for assistance in preparing tests for machines or tools not covered in this manual.

LABORATORY PRACTICE

1. Ask your teacher to approve all work that you plan to do.
2. Report all injuries, however slight, immediately to your teacher
3. Wear suitable eye protection when engaged in any activity where eye hazards may exist
4. Be sure clothes are safe and suitable for shop work. Remove or fasten any loose clothing Roll loose sleeves above elbows. Keep hair away from equipment in operation (students with shoulder length hair must confine their hair .)
5. Observe rules concerning operator's safety zones
6. Cooperate with your classmates in the student management program of your laboratory
7. Caution any other student that you see violating a safety rule
8. Report to the teacher or lab foreman any equipment that does not seem to work properly
9. Keep tools and materials from projecting over the edge of benches whenever possible
10. Use a brush or piece of wood to clear away dry chips and use a rag to clean oily areas
11. Keep the floor clear of scraps and litter.
12. Immediately wipe up any liquids spilled on the floor.
13. Do not operate any equipment while under the influence of mind altering drugs (prescription or non-prescription .)
14. Keep bench, cabinet and locker drawers closed
15. Place oily rags and other combustible materials in a covered metal container
16. Exercise care in handling large, heavy and long pieces of material
17. Know and practice procedures to follow in case of earthquake, fire or other disasters

HAND TOOLS

1. Be sure your hands are as free as possible of dirt, grease and oil when using tools

2. Use proper type and size of hand tool.

3. Make sure that the tools you use are sharp and in good condition.

4. Handle edged or pointed tools with care.

5. Make sure, when using a sharp-edged tool, to point the edge away from yourself and your classmates.

6 Clamp small work on bench or secure in vise when using gouge or wood chisel

7 Control chisels, gouges and carving tools with one hand while the other hand supplies the power.

8 Wear a face shield or safety glasses (goggles, spectacles) when chipping or cutting with a cold chisel Arrange your work so that classmates are protected from flying chips

9. Pass tools to classmates with the handles first.

10. Clamp small work on bench or secure in vise when driving screws.

MACHINE TOOLS

1. Qualify as a safe machine operator.

2. Obtain permission from your teacher before using any power equipment

3. Check adjustments on machines before turning on the power.

4. Make sure that all other students are clear of the machines before turning on the power

5. Keep all machine safety guards in the correct position

6. Start your own machine and remain with it until you have turned it off and it has come to a dead stop.

7. Stay clear of machines being operated by others.

8. Notify teacher or lab foreman when a machine does not seem to be working properly

9. Wait for the machines to come to a dead stop before oiling, cleaning or adjusting

FIRE SAFETY

1 Provide approved fire extinguisher in the laboratory area. Multi-purpose dry chemical units are most effective for general use. Water back-up for extinguishers is often desirable Multi-purpose dry chemical can damage delicate electrical equipment. Carbon Dioxide type extinguishers reduce that possibility.

2. Fire extinguishers should be located along normal paths of travel and must not be obstructed or obscured from view.

3. Store flammable liquids in approved (Underwriters Laboratories or Factory Mutual labeled) safety containers and cabinets.

4. Provide for the bulk storage of flammable materials in an area removed from the main school building.

5. Provide Underwriters Laboratories listed oily waste containers for oily and paint soaked rags It is a good policy to place waste with high spontaneous combustion potential in water filled containers.

6. Provide for the inspection and testing of fire extinguishers at regular intervals to ascertain that they are fully charged and in proper working condition.

7. Provide instruction to students in the location and proper use of fire extinguishers and other fire fighting equipment. However, it is the instructor's primary responsibility to remove all students from a hazardous situation such as a fire

8. Segregate oxidizers and oily material in storage. Do not use oxidizers (peroxide catalyst) containers for any other purposes.

9 Post fire alarm and evacuation procedures.

10. Students should know remote shut-off valve or switch locations for gas or oil fired equipment and how to de-energize electrical equipment in an emergency.

11. Deluge showers would be desirable in all industrial arts/technology education laboratories, especially where there is danger of fire igniting clothing made of synthetic materials

12. An approved fire blanket should be provided in each laboratory.

FIRE EXTINGUISHER

A fire extinguisher is a storage container for an extinguishing agent such as water or chemicals It is designed to put out a small fire, not a big one

Recently pictograms have come into use These picture in blue the type of fire on which an extinguisher is to be used Shown in black with a diagonal red slash are pictures of fires on which the extinguisher is not to be used

An extinguisher is labeled according to whether the fire on which it is to be used occurs in wood or cloth, flammable liquids, electrical or metal sources Using one type of extinguisher on another type fire can make the fire much worse, so learn how extinguishers are labeled and used

Ordinary Combustibles

Fires in paper, cloth, wood, rubber and many plastics require a water type extinguisher labeled "A"

Flammable Liquids

Fires in oil, gasoline, some paints, lacquers, grease in a frying pan or in the oven, solvents and other flammable liquids require an extinguisher labeled "B"

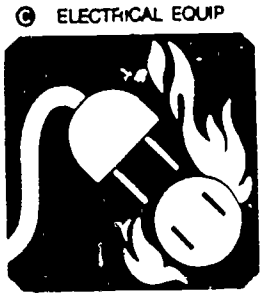

Electrical Equipment

Fires in wiring, fuse boxes, energized electrical equipment and other electrical sources require an extinguisher labeled "C"

Metals

Combustible metals such as magnesium and sodium require special extinguishers labeled "D"

Note Normal extinguishing agents should not be used on metal fires because there is a danger of increasing the intensity of the fire as a result of a chemical reaction

General Safety

Instructions. Do not mark on this test book. Read each question carefully and select the most correct answer. After you have selected the correct answer mark your selection on the answer sheet provided

SAFETY TEST QUESTIONS

( ) 1. You should report all injuries, even though slight, to: (a) an advanced student, (b) your principal; (c) your teacher; or (d) the office.

( ) 2. You should wear suitable eye protection, (a) to improve your vision, (b) when engaged in any activity where eye hazards may exist, (c) to avoid myopia; or (d) when you desire to improve your appearance

( ) 3. It is best to fasten or remove loose clothing and roll sleeves above your elbows; (a) Before operating any machines; (b) during the operation of the machine, (c) after operating a machine; or (d) only when you are assisting the teacher.

( ) 4 The designated area or operator's zone around a machine is to protect, (a) the power equipment; (b) all the students and the teacher working in the lab; (c) only the teacher; or (d) only the student operating the machine.

( ) 5 It is best that any liquid spilled on the floor should be wiped up immediately because it, (a) looks unsightly; (b) will stain the floor; (c) causes more work for the custodian; or (d) may cause someone to slip and injure themselves.

( ) 6 Rags containing oil, gasoline, alcohol, shellac, paint, varnish or lacquer must be, (a) kept in a covered metal container, (b) stored in a waste basket, (c) folded neatly and placed on a shelf, or (d) stored in a cool dry place.

( ) 7. Before using any power equipment, you should obtain permission from, (a) an advanced student; (b) your principal; (c) your teacher; or (d) the office

( ) 8 If you notice any damage or breakage to a tool, instrument or machine, you should, (a) ask an advanced student to repair it; (b) be careful when you use it, (c) say nothing because you might be blamed; or (d) notify your teacher.

( ) 9 When using a knife, you should, (a) pull the knife toward you, (b) strike the blade with a hammer to make large cuts, (c) use the pointed end only, or (d) cut away from your body and hands.

( ) 10. You should grind off a mushroomed head on a chisel or punch so as to prevent; (a) inaccuracies in your work; (b) spoiling the looks of the tool, (c) making the tool difficult to hold; or (d) particles of metal from flying when you strike the head with a hammer.

( ) 11. All work that you plan to do should be approved by the, (a) safety foreman, (b) principal, (c) teacher; or (d) the office.

( ) 12 You should clear away dry chips with, (a) a piece of wood or a brush, (b) your hands, (c) compressed air, or (d) an oily rag.

( ) 13 When using sharp edged tools, such as chisels or gouges, the sharp edge should always be, (a) pointed toward yourself, (b) pointed toward your classmates, (c) pointed toward the teacher; or (d) pointed away from yourself

( ) 14. When passing tools to another person, that person should be able to grasp the tool by the (a) blade; (b) handle; (c) edge; or (d) hasp

( ) 15 You should ,make sure other students are clear of the machine before, (a) making an adjustment; (b) setting the depth; (c) turning on the power, or (d) locking the gears

( ) 16 Before oiling, cleaning or adjusting a machine, you should, (a) allow the machine to come to a complete stop, (b) ask the safety foreman, (c) share the clean-up, or (d) take careful measurements

FILL IN

Read each of the following statements and add the missing word Do not write in the test booklet, write your response in the space provided on the answer sheet

1. Suitable eye _____ must be worn whenever eye hazards exist

2. Use a _____ or a piece of wood to clear away dry chips, never your hand

3 Place _____ rags and other combustibles in a covered metal container.

4. Point a sharp edged tool _____ from yourself and your classmates.

5 Pass tools to your instructor or classmates _____ first

6. Obtain_____ before operating any power equipment

7 Do not operate power equipment unless you are a _____ operator

8. After turning the power off, stand by the power tool until it comes to a complete_____

9 Never _____ a machine while it is still running Wait until it comes to a complete stop

10. Keep all _____ and safety devices in place while operating machine tools

GENERAL SAFETY RULES

1. Do not enter the lab unless an instructor is present.

2 Eye protection is required when using any power tool or at any other time you suspect there may be eye danger.

3. LONG HAIR IS DANGEROUS. Special care must be taken to prevent accidents.

4. Proper clothing must be worn No loose, ragged or sloppy clothing is permitted. Remove loose jewelry before operating machine.

5 **THERE WILL BE ABSOLUTELY NO HORSEPLAY IN THE LAB.** Others can be injured by your actions.

6. Devote all of your attention to the machine or tool that you are using.

7. Safety lines are for your protection. Stay behind them unless you are using a machine within the safety line area.

8 Tools and materials can be dangerous Do not handle unless you have something specific in mind.

9 When help is needed on an operation, ask only for enough to do the job.

10 Clean your area when through.

11. Disconnect power before changing blades or belts

12 Do not leave a machine until all motion has stopped.

Metal Working Equipment

This section contains specific safety instructions for operating certain equipment used in the area of metal working. Each set of safety instructions relating to the operation of a particular piece of equipment is followed by safety test questions. The general safety instructions, as well as instructions in other sections of this safety guide, may also apply to the area of metal working equipment.

Buffer

SAFETY INSTRUCTIONS

1. Obtain permission from your teacher before using the buffer.
2. Hold work with both hands.
3. Ask your teacher for special instruction.
4. Make sure that no one but you is inside the operator's zone.
5. Wear face shield or safety glasses (goggles, spectacles .)
6. Turn on power only after permission is given.
7. Apply compound sparingly.
8. Keep hands away from the wheel while it is in motion.
9. Hold work below center (horizontal axis) as wheel revolves toward you.
10. Buff flat surfaces from center toward lower edge, sharp edges should point downward; buff over sharp edges.
11. Press material against wheel with correct amount of pressure.
12. Turn off power after using buffer.
13. Clean buffer and area with a brush.

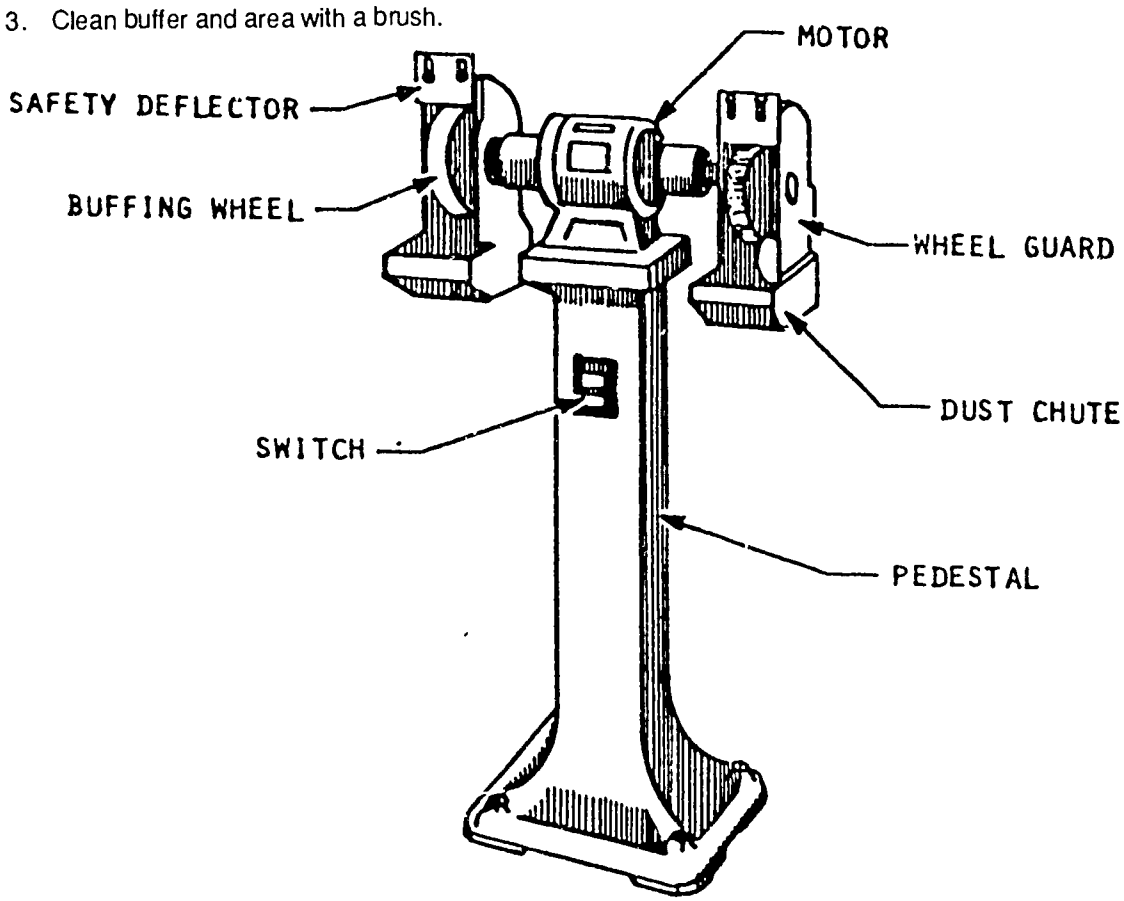

Buffer

Instructions Do not mark on this test booklet. Read each question carefully and select the most correct answer. After you have selected the correct answer mark your selection on the answer sheet provided

SAFETY TEST QUESTIONS

( ) 1. When buffing, you should hold your work, (a) on top of the wheel; (b) below center (horizontal axis) of wheel, (c) above center (horizontal axis of wheel), or (d) on bottom of wheel.

( ) 2 You must wear goggles or a face shield when using buffer because either of these will, (a) magnify your work, (b) remove glare, (c) help avoid distraction, or (d) protect your eyes from flying particles.

( ) 3. Special permission to buff small pieces must be obtained from, (a) foreman, (b) teacher, (c) student, or (d) monitor.

( ) 4. When using the buffer, you should point sharp edges of your work, (a) upward, (b) sideways; (c) horizontal, or (d) downward.

( ) 5. Flat surfaces should always be buffed, (a) from center toward lower edge, (b) from edge toward the center; (c) from center to top edge; or (d) from center to center

( ) 6. Buffers may be operated by, (a) more than one operator at a time (b) two or more operators at a time, (c) one operator only; or (d) remote control.

( ) 7 After using, the buffer should be cleaned with (a) compressed air, (b) the bare hand, (c) an oily rag, or (d) a brush.

FILL IN

Read each of the following statements and add the missing word Write your response in the space provided on the answer sheet. Do not write in the test booklet.

1. Wear a face shield or _____ while operating the buffer.

2. Hold work _____ center (horizontal axis) as the wheel revolves toward you

3 Keep your hands away from the _____ while it is in motion.

4 Sharp edges should point _____ as you buff

5. Buff flat pieces from the _____ toward the lower edge.

IDENTIFY PARTS

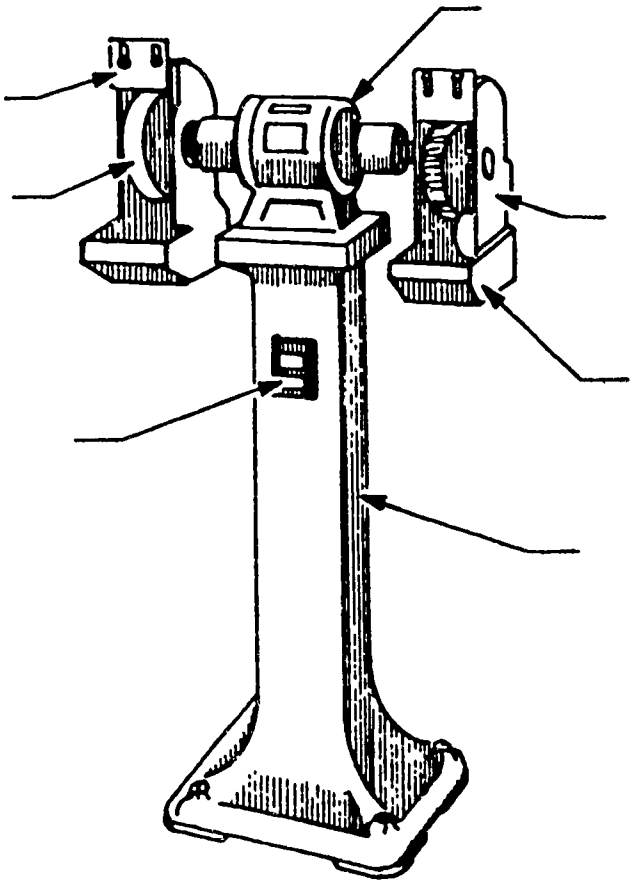

Drill Press

SAFETY INSTRUCTIONS

1. Obtain permission from your teacher before using the drill press.

2. Shift belt and make other adjustments only when power switch is turned off. On some machines, the speed adjustment is made only when the motor is turned on. Be sure you know your machine.

3 See that belt guard is in place. Do not operate without belt guard in place.

4. Be certain that the table and head of drill press are secure.

5. Select proper drill (be sure it is sharp) and coolant.

6. Remove chuck key immediately after using it. Be sure chuck is tight on the drill.

7. Use drill press vise whenever possible. Clamp vise or work to drill press table.

8 Make sure no one but you is inside the operator's zone. In some instances, large or special items will require help. Ask the teacher for assistance.

9. Wear face shield or safety glasses (goggles, spectacles .)

10 Turn on power only after permission is given.

11. Keep hands away from revolving spindle, chuck, drill and chips.

12. Operate feed handle so that drill cuts evenly into work.

13. Ease up on feed pressure when drill begins to break through material.

14. Back drill out as soon as hole is drilled.

15. Stop the drill press before attempting to remove work, chips or cuttings.

16 Use a brush to remove chips or shavings.

17 Keep floor clean around drill press.

18. Step away immediately if work comes loose and is seized by drill, and shut off machine at the power panel. Do not attempt to shut off the machine at its switch.

19 Turn off power after using drill press and stand by until the machine has stopped

20 Clean off drill press table and surrounding area. Return cleaned drills, coolants and clamping devices to designated place.

21 Place the long end of the piece being drilled to the left so it will strike the post (should the material slip and start rotating) and not the operator

22 Never wear gloves while operating the drill press.

23 Do not drill into a container that may have contained gasoline or other flammable material

24 Hold or clamp round stock in a "V" block.

25 Clamp sheet metal between two blocks of wood and then drill through both wood and sheetmetal.

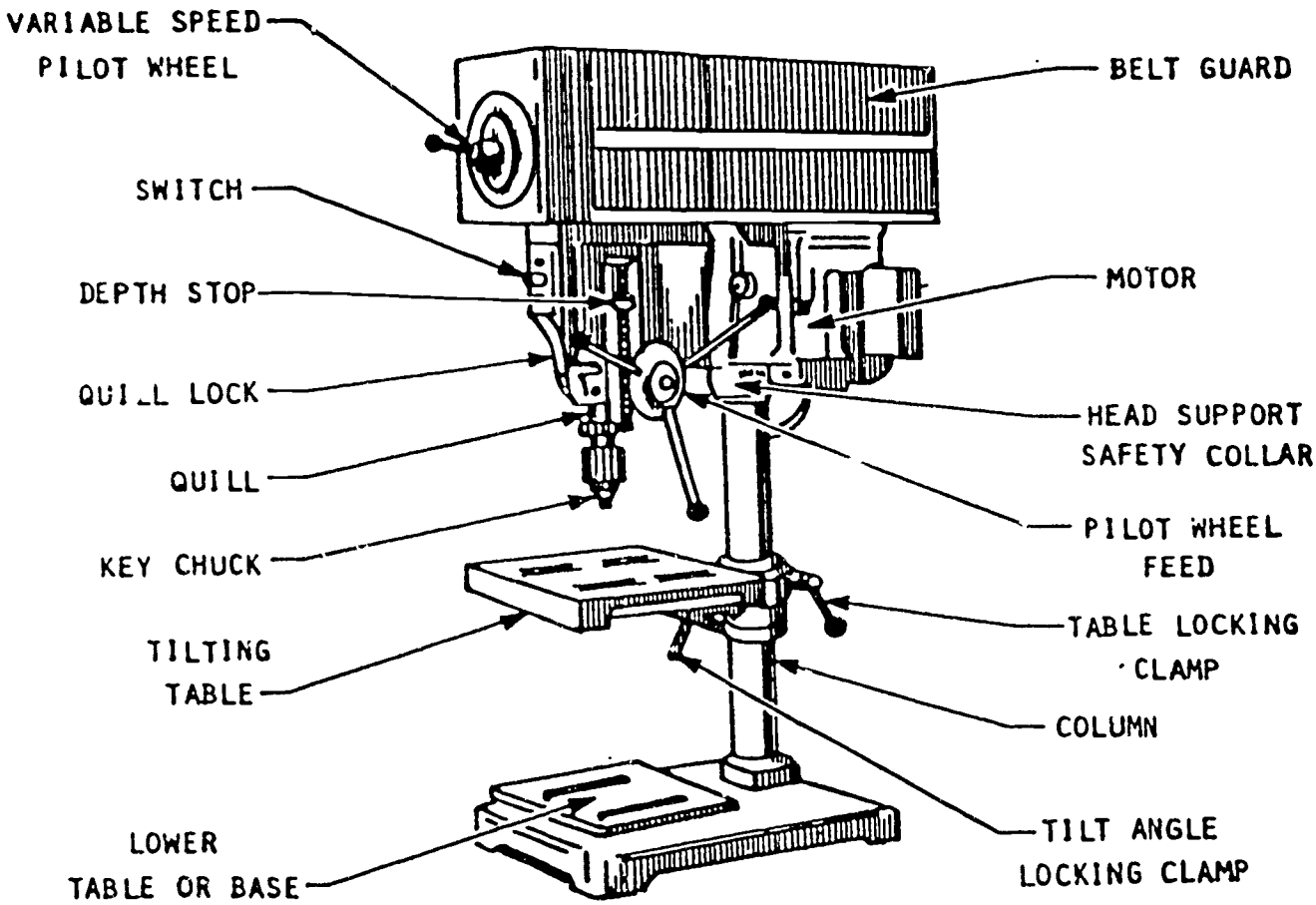

Drill Press

Instructions. Do not mark in this test book. Read each question carefully and select the most correct answer. After you have selected the correct answer mark your selection on the answer sheet provided

SAFETY TEST QUESTIONS

( ) 1. Drill press work should be held: (a) with a pair of tongs, (b) by the hands, (c) in a vise or firmly clamped to the table; or (d) by an assistant at all times.

( ) 2. When the drill begins to break through the work, you should: (a) ease up on the feed pressure; (b) maintain the same feed pressure; (c) stop the drill press immediately, or (d) apply more pressure.

( ) 3. The best way to remove chips from the drill press is with. (a) your fingers; (b) a small drill, (c) a long ruler; or (d) a brush.

( ) 4. By removing the chuck key from the chuck before turning on the power, you will prevent (a) the chuck from being damaged; (b) the drill from breaking; (c) the chuck key from being thrown out at a terrific speed; or (d) the chuck from becoming unbalanced

( ) 5 If work is seized by the drill, you should (without endangering yourself). (a) exert more feed pressure; (b) stop the machine immediately; (c) grab it with your hands, or (d) decrease the feed pressure.

( ) 6. To change the belt to increase speed on a drill press <u>not</u> equipped with a speed adjustment (a) turn switch on and shift belt with a stick; (b) turn switch off and shift belt with hands, (c) select a smaller drill; or (d) lower the table.

( ) 7. To protect the eyes from flying chips when operating a drill press, always. (a) shield your face with your hand, (b) slow the speed down; (c) turn away from the drill press; or (d) wear a face shield or safety glasses.

( ) 8. When drilling round stock, the material should be supported (a) on a flat surface, (b) with the hands; (c) in a "V" block; or (d) by another student.

( ) 9. Sheet metal should be drilled. (a) directly on the drill press tables, (b) clamped between two pieces of wood; (c) on another piece of metal; or (d) only when necessary.

FILL-IN

Read each of the following statements and add the missing word. Write your response in the space provided on the answer sheet. Do not write in the test booklet.

1. Remove the chuck _____ immediately after using it.
2. Be sure the chuck is _____ before turning on the drill press.
3. Use a drill press _____ to hold your work whenever possible.
4. Clamp the press vise or work to the drill press _____ whenever possible.
5. Keep hands away from the spindle, chuck, _____ and chips.
6. Operate the feed handle so that the drill cuts _____ into the work.
7. Use a _____ to remove chips or shavings.
8. Step away immediately if work comes loose or is _____ by the drill.

IDENTIFY PARTS

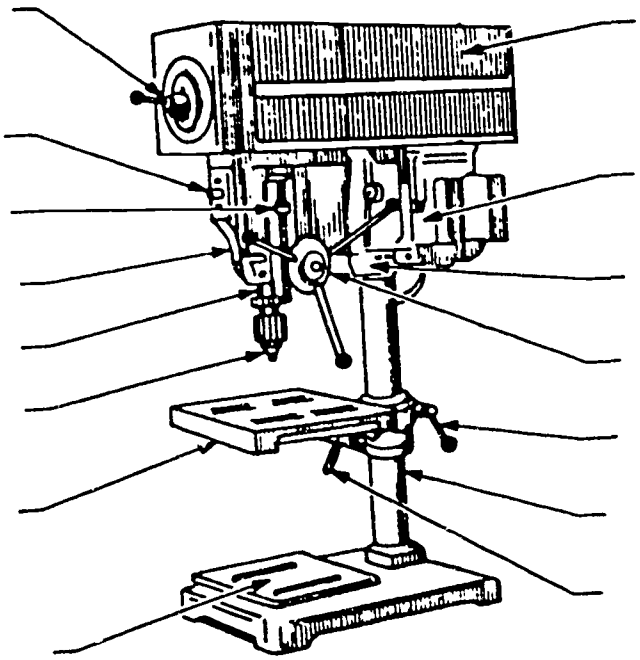

Grinder

SAFETY INSTRUCTIONS

1. Obtain permission from your teacher before using grinder.

2. Set tool rest 1/16 in. to 1/8 in. from the wheel and fasten securely before turning on the power

3 Dress wheel with a dressing tool when necessary. The wheel must be perfectly clean and round with no vibrations.

4. See that the guard is in place. Make sure that the housing surrounding the grinding wheel is intact and in place.

5. Make sure that no one but you is inside the operator's zone.

6. Wear face shield or safety glasses (goggles, spectacles) and use glass safety guard on grinder

7. Stand to one side of wheel.

8. Turn on power only after permission is given

9. Keep hands away from the wheel while it is in motion.

10. Hold work with your hands. Ask the teacher for special instruction and permission to grind small pieces.

11. Use the face of the wheel only.

12. Press material against wheel with correct amount of pressure to avoid burning or loading of the wheel.

13 Keep work in motion across face of wheel so that the wheel will wear evenly across the face

14. Turn off power after using grinder, and stand by until machine has stopped.

15. Inspect the wheel before turning on the power to make sure that it is not cracked or broken

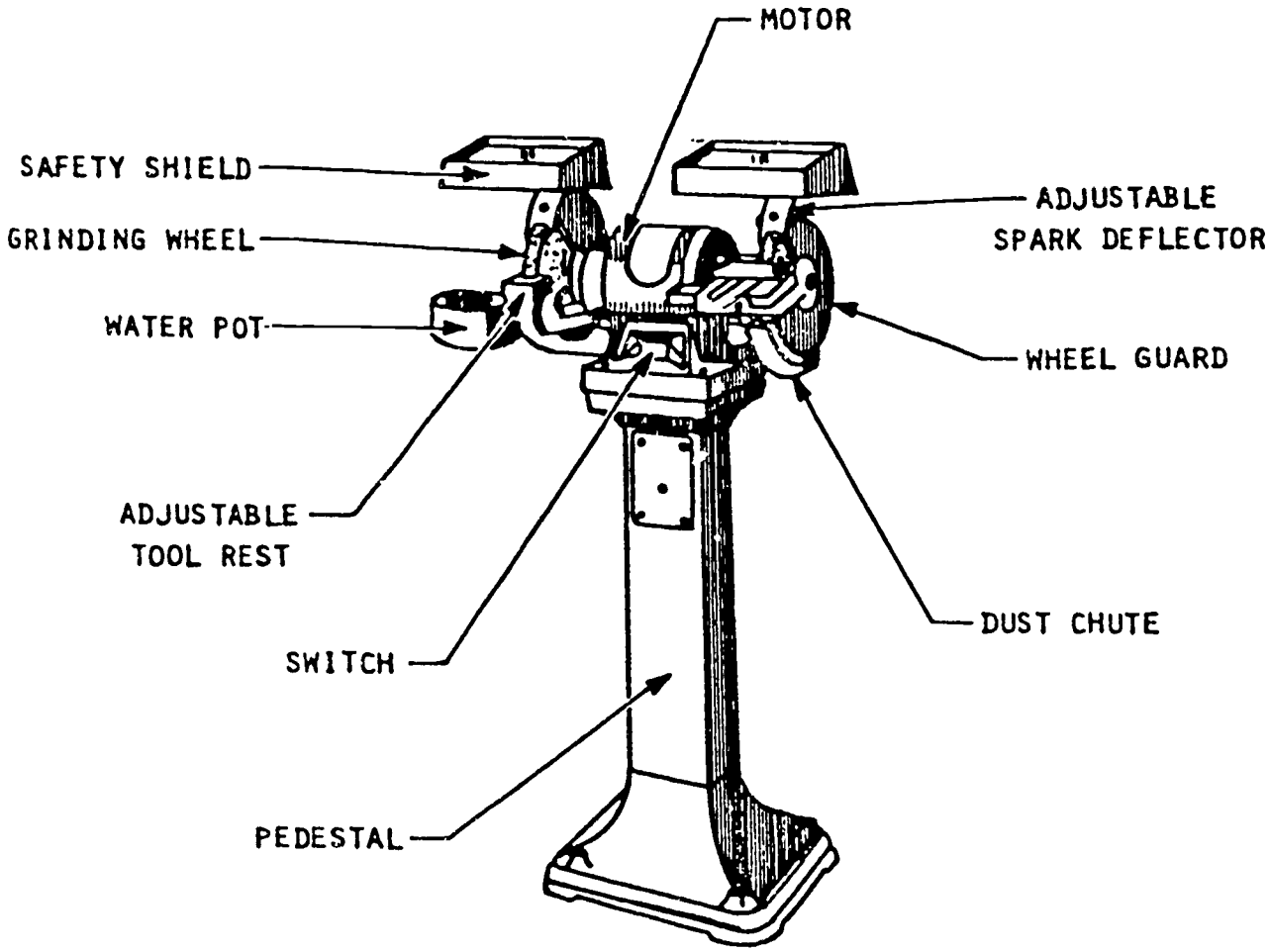
MOTOR
SAFETY SHIELD
GRINDING WHEEL
WATER POT
ADJUSTABLE
TOOL REST
SWITCH
PEDESTAL
ADJUSTABLE
SPARK DEFLECTOR
WHEEL GUARD
DUST CHUTE

Grinder

Instructions. Do not mark in this test book. Read each question carefully and select the most correct answer. After you have selected the correct answer mark your selection on the answer sheet provided

SAFETY TEST QUESTIONS

( ) 1 You must wear a face shield or safety glasses (goggles, spectacles) when using grinder because these: (a) are becoming to you; (b) magnify the work, thus making it easier for you to see, (c) protect your eyes from bright light; or (d) protect your eyes from flying particles.

( ) 2. The grinder tool rest must be securely fastened. (a) immediately after grinder is turned on; (b) 1 inch away from the wheel; (c) when wheel is not in motion; or (d) after power is turned off and the wheel is coasting.

( ) 3 You should set grinder tool rest: (a) 1/8 inch away from the wheel, (b) so wheel runs lightly against tool rest; (c) 1/2 inch away from wheel; or (d) no more than 1/2 inch from wheel.

( ) 4. To grind small pieces of stock, you should: (a) hold them in your bare hands; (b) hold them with a rag, (c) use a very coarse wheel; or (d) receive special instruction and permission from your teacher.

( ) 5. You should stand to one side of grinding wheel while it is gathering speed because: (a) if it has a defect, the wheel may fly to pieces; (b) the air currents from wheel are unhealthy, (c) it will tempt you to use the wheel to soon and cause it to stop; or (d) you can see if the wheel is running true.

( ) 6 To make a grinder wheel perfectly round or to remove chips: (a) a file must be used; (b) a coarse piece of metal must be used; or (c) the tool rest must be moved closer to the wheel; or (d) a dressing tool must be used.

( ) 7. When grinding any object it is permissible to: (a) use the face of the wheel only, (b) use the side of the wheel only; (c) combine the face with the side of the wheel, or (d) preheat the object

FILL-IN

Read each of the following statements and add the missing word. Write your response in the space provided on the answer sheet Do not write in the test booklet.

1 Set the tool rest _____ to 1/8 inch away from the wheel.

2. Wear a face shield or _____ when operating the grinder.

3 Stand to one side of the _____ .

4. Keep hands away from the _____ when it is turning.

5 Use the _____ of the wheel only, never the side.

6. Use the correct amount of _____ against the wheel when grinding.

7. Be sure that the safety _____ is in place.

8. Turn the power _____ after using the grinder

IDENTIFY PARTS

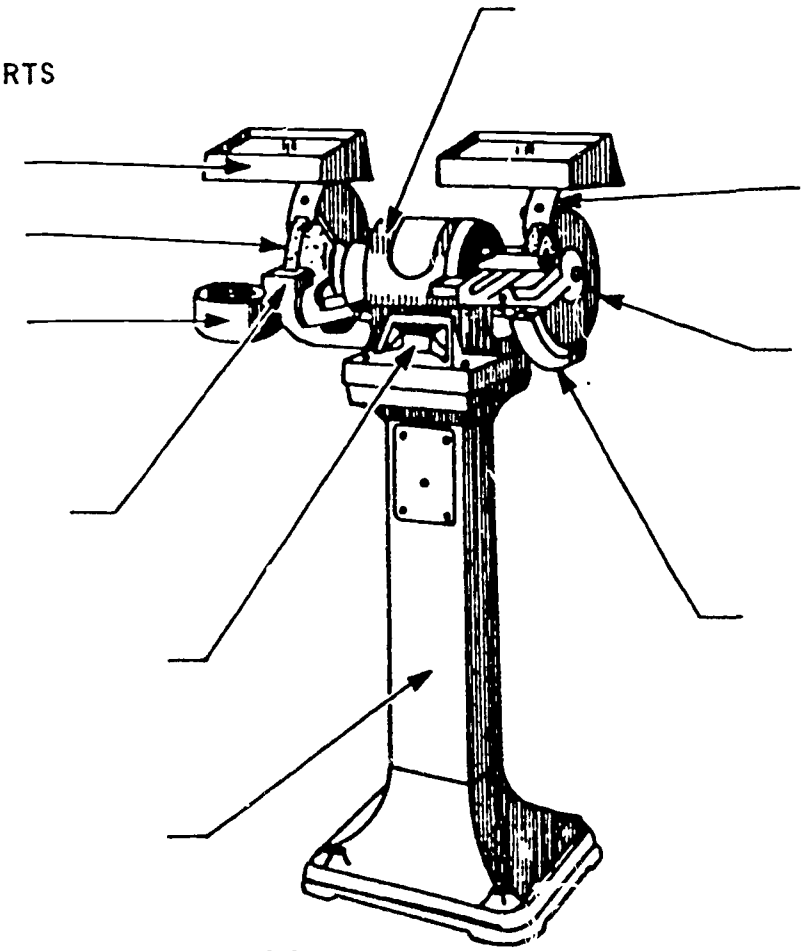

Portable Electric Drill

SAFETY INSTRUCTIONS

1. Obtain permission from your teacher before using portable electric drill
2. Select proper drill bit (be sure it is sharp) and coolant.
3. Make sure switch is in "off" position.
4. Remove chuck key immediately after using it.
5. Make sure that a grounded wire is connected to the portable electric drill Select a location that is dry and not grounded when using a portable electric tool to avoid serious electrical shock
6. Keep drill motor, electric cord and plug dry at all times.
7. When preparing to use drill, insert proper drill bit, plug in electric cord, and make sure to hold the machine firmly. Turn on power only after permission is given.
8. Keep hands away from revolving spindle and drill bit.
9. Apply straight and steady pressure on the drill.
10. Ease up on pressure just before drill begins to break through material
11. Back drill out as soon as hole is drilled.
12. Turn off power and hold machine firmly until it comes to a dead stop, then rest machine on its side.
13. Disconnect electric cord. Clean and return machine to designated place
14. Note position of the cord so as not to drill into it or get the cord wrapped around the drill bit
15. Make certain the drill will not injure someone working on the opposite side of the work

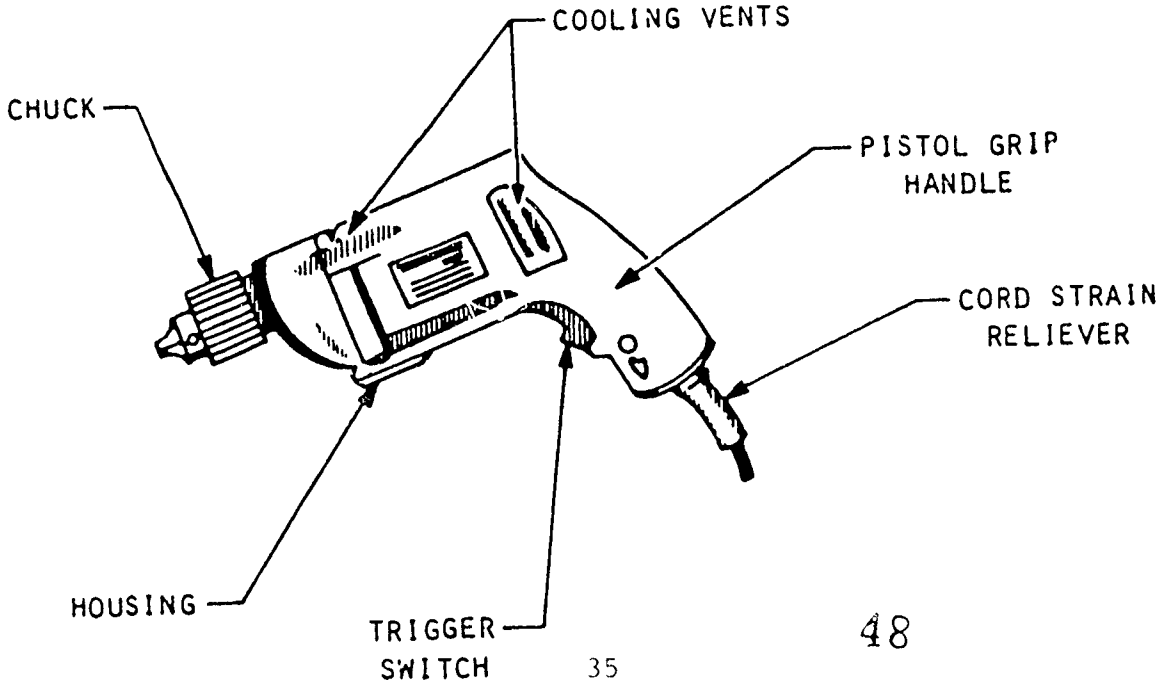

Portable Electric Drill

Instructions. Do not mark in this test book Read each question carefully and select the most correct answer. After you have selected the correct answer mark your selection on the answer sheet provided

SAFETY TEST QUESTIONS

( ) 1. You should select a location that is dry and not grounded for using a portable electric tool or appliance so as to avoid: (a) soiling the equipment; (b) serious electric shock; (c) motor bearing deterioration; or (d) discoloring the electric cord.

( ) 2. By removing the chuck key from the drill chuck before turning on the power, you will prevent the. (a) chuck from being damaged; (b) drill from breaking; (c) chuck key from being thrown out at a terrific speed; or (d) chuck from becoming unbalanced.

( ) 3. Before plugging in the portable electric drill, you should (a) remove the drill bit, (b) check the armature; (c) make sure the switch is off; or (d) clean the cooling vents.

( ) 4 When you turn off the switch on the portable electric drill, you should· (a) disconnect electric cord; (b) inspect rotor; (c) blow the sawdust out of the armature opening; or (d) hold the machine firmly until it comes to a dead stop.

( ) 5. Just before the drill begins to break through the material, the pressure should be: (a) maintained: (b) eased up; (c) increased; or (d) stopped completely.

FILL-IN

Read each of the following statements and add the missing word Write your response in the space provided on the answer sheet. Do not write in the test booklet.

1. Remove the _____ key as soon as you are through using it

2 Be sure that the drill bit is _____ before using.

3. Keep drill, electric cord and plug in good condition at all times to _____ electric shock

4. Hold the drill _____ so that it will not be jerked out of your hands.

5. Apply straight and _____ pressure on the drill.

6 Ease up on pressure just _____ drill begins to break through the material.

7. Make sure that the grounded wire is _____ to the portable electric drill.

IDENTIFY PARTS

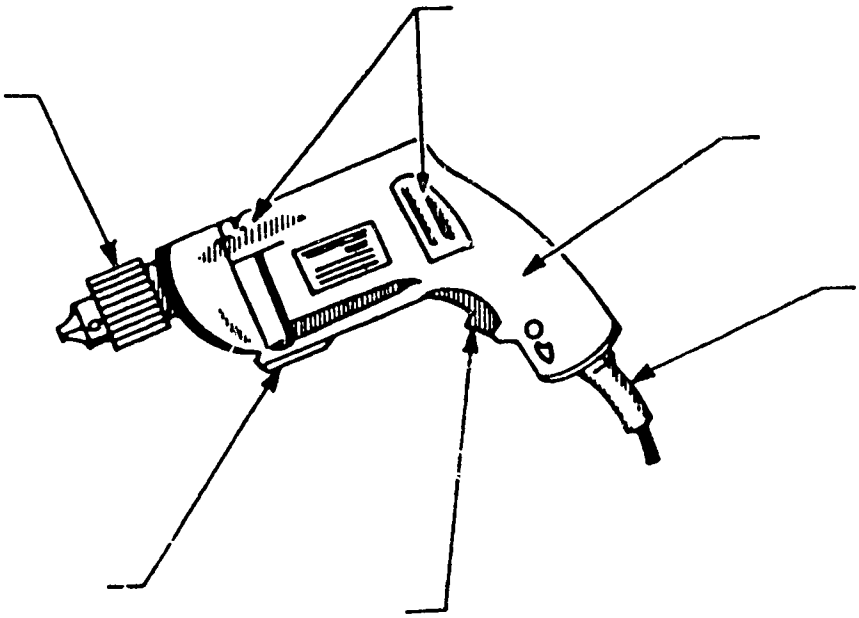

Welder-Oxygen/Acetylene

SAFETY INSTRUCTIONS

1. Obtain permission from your teacher before using welding equipment.
2. Fasten cylinders with a chain or other suitable device as a protection against falling or rolling
3. Close cylinder valve and replace protective cover before moving cylinder.
4. Cylinders should always be secured to a cart before moving.
5. Keep welding equipment free of oil and grease. Use only clean rags for wiping off welding equipment.
6. Inspect hoses before using.
7. Make sure that hose is properly connected and that all connections are tight
8. Report any leaking cylinders or connections to teacher immediately.
9. Make sure that you have adequate ventilation.
10. Keep all flammable material away from working area.
11. Be sure that you wear welding goggles. All assistants and observers must also wear welding goggles. Goggles protect against heat, rays and sparks.
12. Release regulator pressure (T - Bar) screw. Open cylinder valves gradually, clockwise
13. Open acetylene cylinder valve one and one-fourth (1 1/4) turns or less. Keep wrench in place so that valve may be shut off quickly if necessary. Open oxygen valve all the way
14. Keep acetylene pressure in the hose below 15 pounds per square inch.
15. Use a friction torch lighter to ignite torch.
16. Close acetylene valve first if torch backfires.
17. Make certain lighted torch always points away from yourself and other students
18. Keep sparks and flame away from cylinders
19. Close cylinder valve when you have finished your welding job.

20. Quench section of metal that has been welded or mark with chalk or soapstone the word "hot" on the metal if it is necessary for you to leave your work.

21 Wear proper welding clothing and shoes when cutting or welding.

22 Do not cut galvanized metal indoors. A toxic gas is given off.

23. Never release oxygen or acetylene in a confined area. The acetylene may ignite, and the concentrated oxygen may cause clothing and other combustible matenal to burn very fast

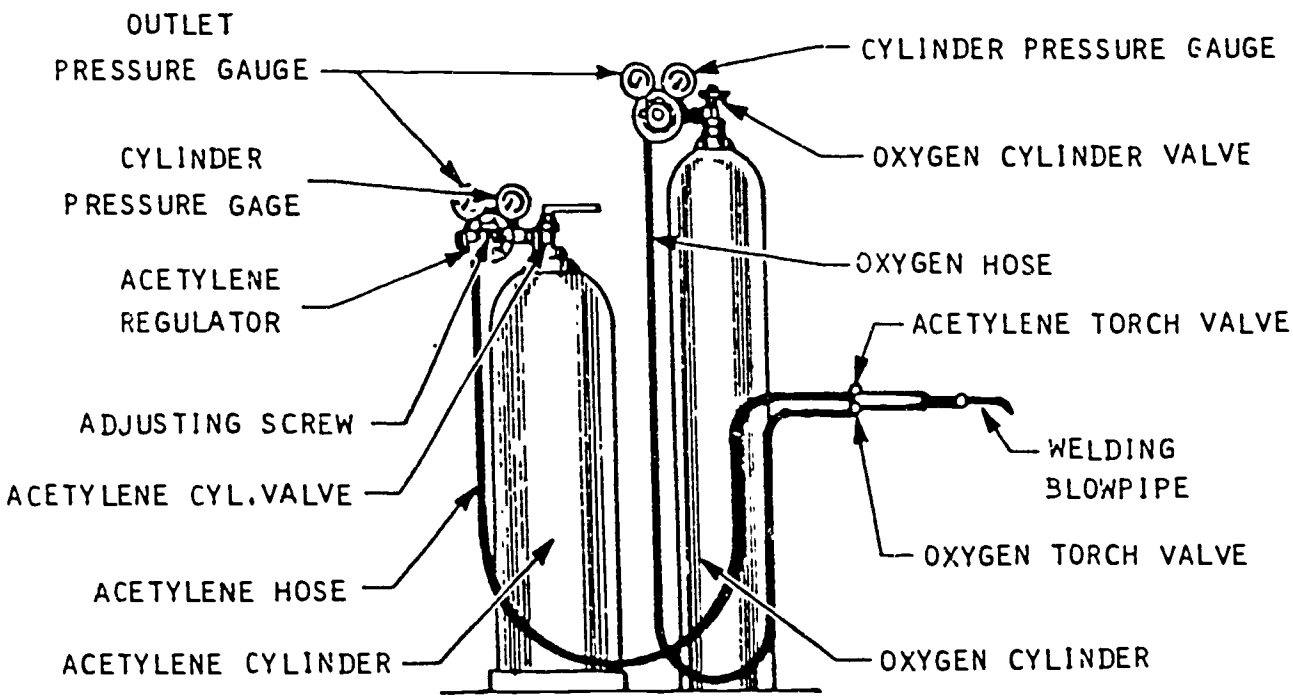

Welder-Oxygen/Acetylene

Instructions. Do not mark in this test book. Read each question carefully and select the most correct answer. After you have selected the correct answer mark your selection on the answer sheet provided

SAFETY TEST QUESTIONS

( ) 1. You should make sure welding equipment is: (a) lubricated with oil; (b) tightened by hand, (c) kept free of oil and grease; or (d) lubricated weekly.

( ) 2. Welding goggles are worn because they: (a) magnify your work; (b) protect your eyes from dust; (c) help you concentrate on your work; or (d) protect your eyes against heat, rays and sparks.

( ) 3 The valve on a cylinder of acetylene should be opened: (a) with a pair of pliers; (b) three full turns; (c) one and one-fourth turns or less; or (d) as many turns as possible.

( ) 4. When you light a welding torch, you should use a: (a) friction torch lighter; (b) match; (c) fluid lighter; or (d) a piece of lighted paper.

( ) 5. If a welding torch backfires, you should: (a) dip the torch in water; (b) inspect the hose, (c) hang an out-of-order sign on equipment; or (d) close the acetylene valve first.

( ) 6. Oxygen and acetylene tanks should be stored: (a) flat; (b) on end; (c) upright and secured with a chain; or (d) in barrels.

( ) 7. Leaking cylinders and connections: (a) are not important; (b) should be reported to the teacher; (c) should be reported to the safety foreman; or (d) should be sprayed with water.

( ) 8. The acetylene pressure in the hose should always be kept below: (a) 15 pounds per square inch; (b) 20 pounds per square inch; (c) 25 pounds per square inch; or (d) 30 pounds per square inch

FILL - IN

Read each of the following statements and add the missing word. Write your response in the space provided on the answer sheet. Do not write in the test booklet.

1 Cylinders should be fastened with a chain or other suitable device to prevent _____ or rolling.

2 Keep welding equipment free from _____ or grease.

3. Be sure that you wear welding _____ when welding or observing someone welding.

4. Cylinder valves should be opened _____, clockwise.

5 Always use a _____ torch lighter to ignite the flame.

6. Acetylene valve should be opened _____ and one fourth turn or less.

7. Keep acetylene pressure below _____ pounds per square inch.

8. Quench metal that has been welded or mark with the word _____ before leaving unattended

IDENTIFY PARTS

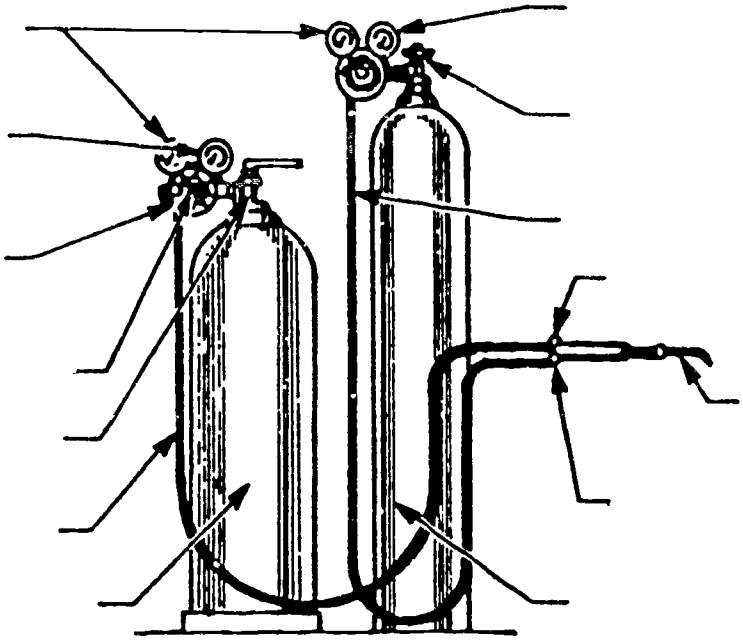

Welder-Electric

SAFETY INSTRUCTIONS

1 Obtain permission from your teacher before using welding equipment.

2 Wear a helmet with a proper, intact observation window (cracked window will allow infrared and ultraviolet rays to pass through to the eyes), treated gauntlet gloves and a treated leather apron. All assistants and observers must also wear identical equipment

3 Keep your sleeves and pants cuffs rolled down and wear a leather jacket to avoid exposure of any skin surface.

4 Make sure that electric welding is only done in a correctly constructed booth or room or behind proper screens.

5 Make sure that there is ample ventilation.

6 Keep all flammable material away from working area.

7 See that the floor area is clear of all obstructions.

8 Report to your teacher at once if electrode holder, holder cable connection, cable or cable terminals at the welding machine, ground clamp or lugs get hot.

9 Hang up electrode holder and turn off welder when work is being changed or when work has been completed The electrode holder must not touch any grounded metal or table.

10 Warn all students standing nearby when you are ready to strike an arc.

11 Avoid looking at an arc with unprotected eyes

12 Galvanized metal should not be welded inside the shop.

13 Be careful when releasing the ground clamp after welding. It may be hot due to poor contact

14 Adjust the welder only when it is <u>not</u> being used for welding.

15 When welding in an open area, use the portable welding screen.

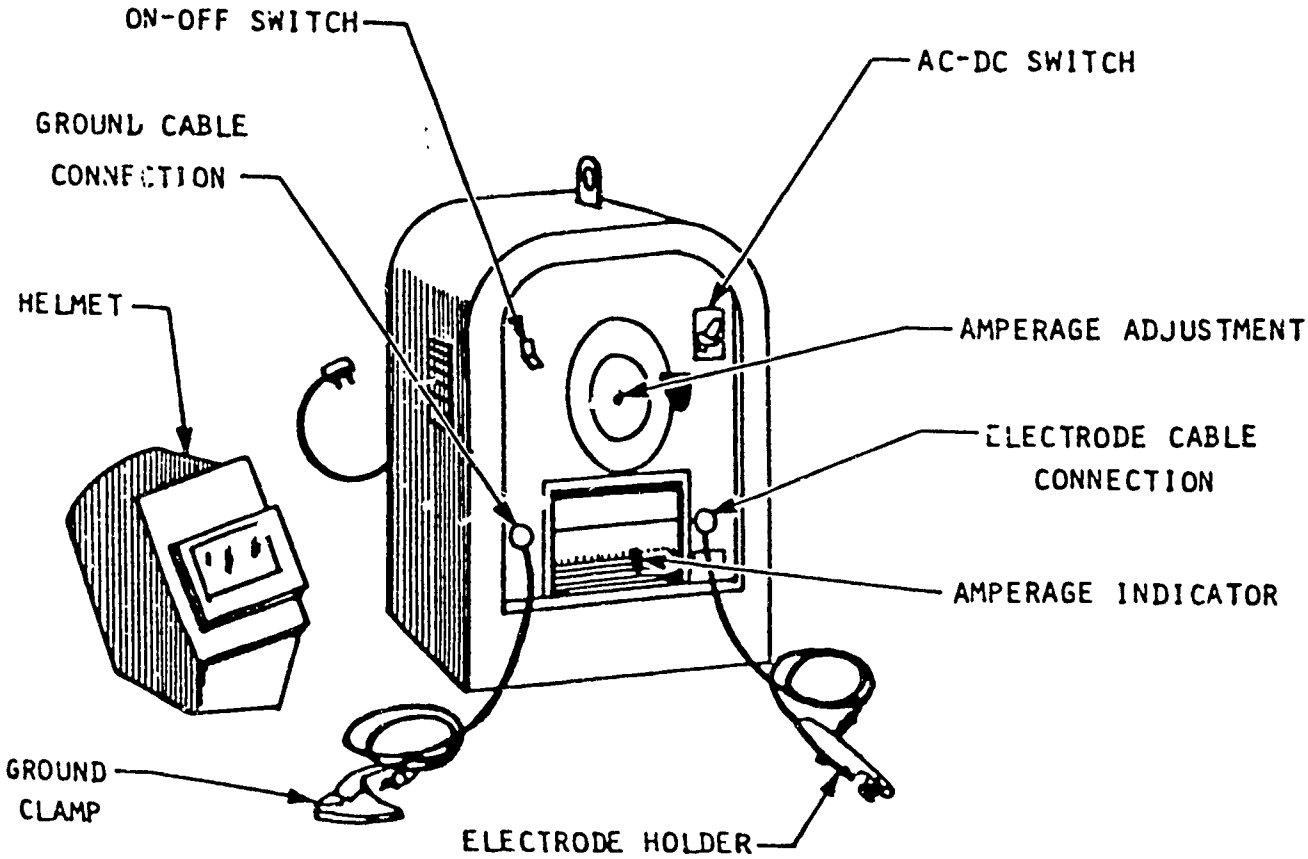
ON-OFF SWITCH
AC-DC SWITCH
GROUND CABLE
CONNECTION
HELMET
AMPERAGE ADJUSTMENT
ELECTRODE CABLE
CONNECTION
AMPERAGE INDICATOR
GROUND
CLAMP
ELECTRODE HOLDER

IDENTIFY PARTS

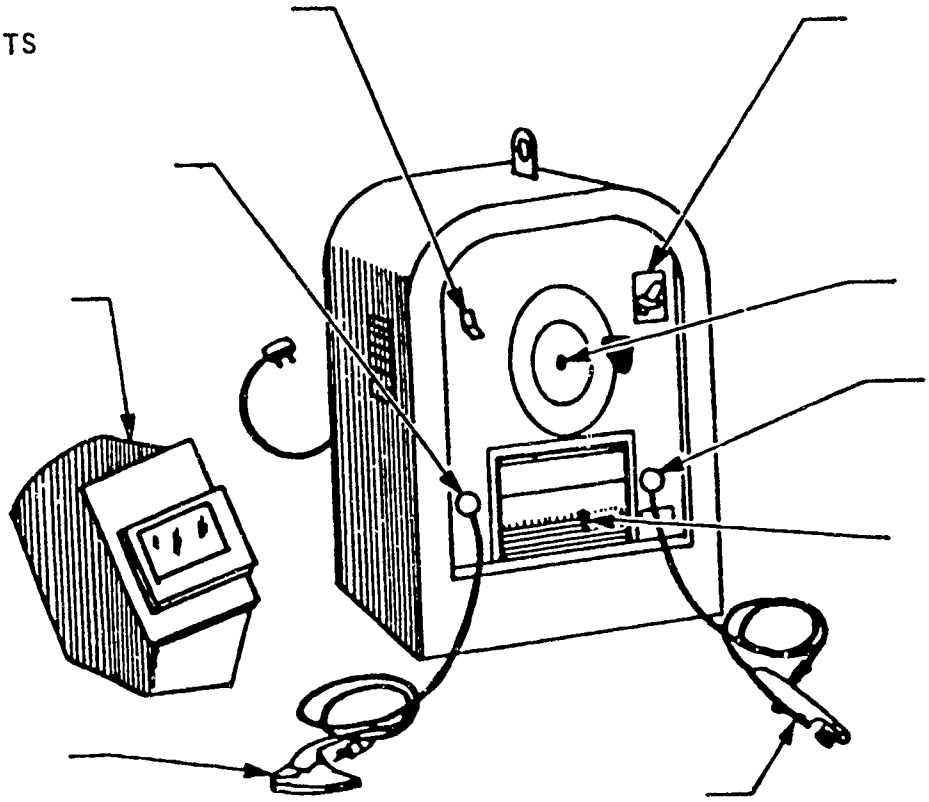

Metal Working Lathe

SAFETY INSTRUCTIONS

1. Obtain permission from your teacher before using the metal working lathe.

2 Roll your sleeves above your elbows; secure loose clothing.

3. Do not wear rings or a wrist watch while operating the lathe.

4. Long hair must be secured with a headband, hair net or other suitable means which will keep hair well away from working surfaces.

5. Before turning on the power, check to see that the tailstock, tool holder and job are properly clamped.

6. Use hand power only when putting on or removing the chuck or faceplate. Do not use the power that operates the lathe.

7. When assembling or removing the chuck, place a board on the ways to prevent damage to the machine and possibly the operator in case the chuck falls. Have a firm grip on the chuck as it nears the end of the thread.

8. Do not leave the chuck wrench or any other tool in the chuck If the machine is turned on, the wrench may fly out and injure the operator or another person.

9. Do not use a wrench on revolving work parts.

10. Never try to measure work or feel the edge, or adjust a cutting tool when the lathe is running

11. Do not take heavy cuts on long slender work. Doing so may cause the job to fly out of the machine.

12. When filing, be sure that the tang of the file is protected by a strong wooden handle. Stand to one side so that, if the file is forced upward, it will go past your body rather than against it

13. As a general rule, do not change or shift gears while the lathe is running.

14. Stand erect in order to keep your head away from flying chips.

15. Keep your hands away from revolving gears.

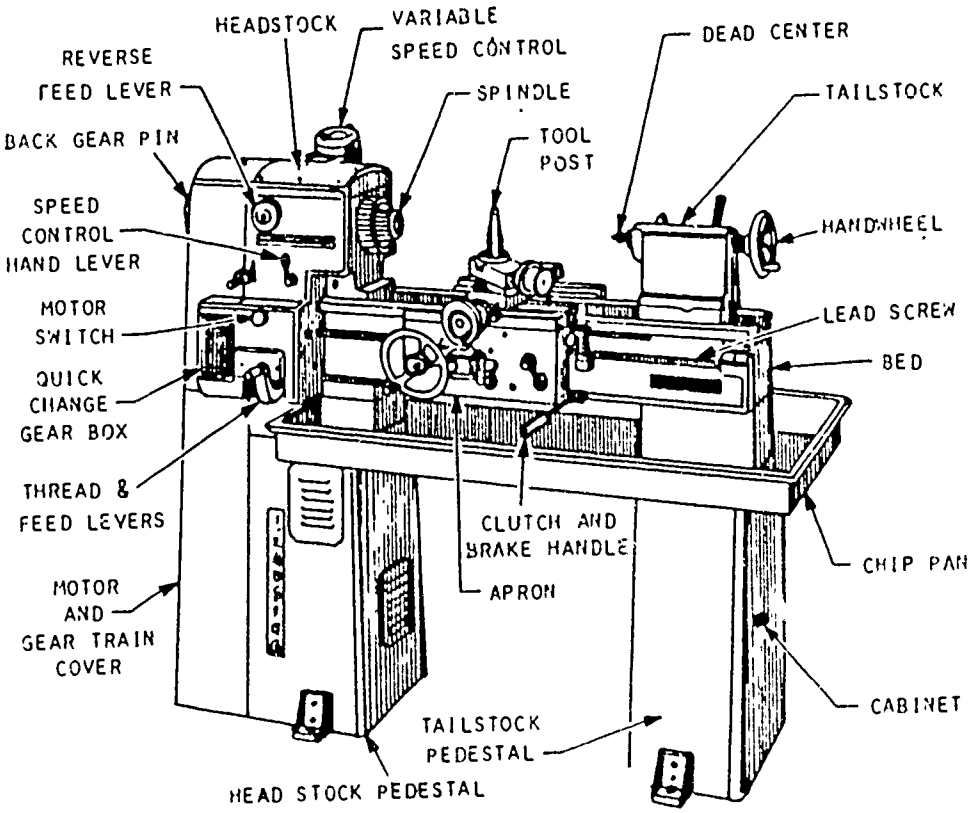
HEADSTOCK
VARIABLE SPEED CONTROL
DEAD CENTER
REVERSE FEED LEVER
SPINDLE
TAILSTOCK
BACK GEAR PIN
TOOL POST
SPEED CONTROL HAND LEVER
HANDWHEEL
MOTOR SWITCH
LEAD SCREW
BED
QUICK CHANGE GEAR BOX
THREAD & FEED LEVERS
CLUTCH AND BRAKE HANDLE
CHIP PAN
MOTOR AND GEAR TRAIN COVER
APRON
CABINET
TAILSTOCK PEDESTAL
HEAD STOCK PEDESTAL

Metal Working Lathe

Instructions Do not mark in this test book. Read each question carefully and select the most correct answer. After you have selected the correct answer mark your selection on the answer sheet provided

SAFETY TEST QUESTIONS

( ) 1. All adjustments to the lathe are to be made: (a) while the machine is coasting; (b) by the lab foreman; (c) while the machine is at a dead stop; or (d) while the power is on

( ) 2. When assembling or removing the chuck. (a) place a board on the ways; (b) grip the chuck firmly; (c) never use the power that operates the lathe; or (d) all of the above are true.

( ) 3. The chuck wrench should never be left in the lathe chuck because (a) it is awkward to use the lathe that way, (b) the work piece will become loose as the lathe operates; (c) it will interfere with the operation of the crossfeed, or (d) it may be thrown from the lathe and injure someone

( ) 4. When the lathe is running, you should never. (a) adjust the cutting tool, (b) feel the edge, (c) try to measure the work piece; or (d) all of the above are true

( ) 5 Before operating the lathe, loose sleeves should be rolled up above the elbows and. (a) wrist watches and jewelry removed; (b) long hair tied beck or in a net; (c) both "a" and "b" are correct; or (d) neither "a" or "b" are correct.

( ) 6. You should check to see that the tailstock, tool holder and work piece are properly clamped before. (a) turning the machine off; (b) leaving for a break; (c) turning on the power; or (d) lubricating the machine.

( ) 7. When using a hand file on the work piece, you should. (a) be certain that it has a proper handle, (b) stand to one side; (c) neither "a" or "b" is correct; or (d) both "a" and "b" are correct.

FILL - IN

Read each of the following statements and add the missing word Write your response in the space provided on the answer sheet Do not write in the test booklet.

1. Roll your sleeves up above the _____ and remove watches and rings prior to operating the metal lathe.

2. Do not make any _____ on the lathe while it is running.

3. Check the tailstock, tool rest and work piece to be certain that they are properly clamped before turning on the _____ .

4 Never _____ revolving gears or the work piece with your fingers while the lathe is operating.

5. Any measuring or adjusting of the work piece should be done when the lathe is at a _____ stop.

6. Do not make _____ cuts in long slender talk

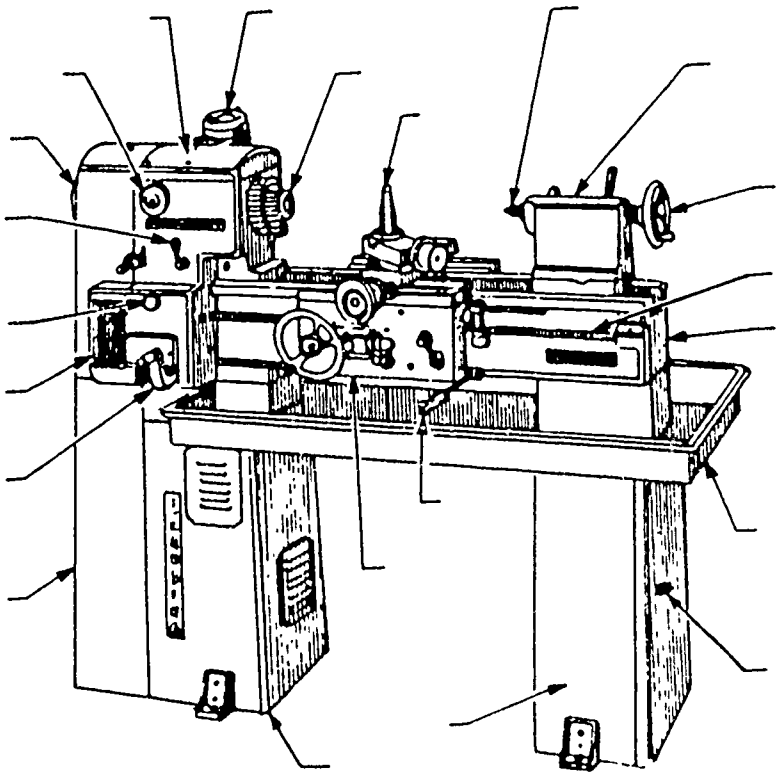

Woodworking Equipment

This section contains specific safety instructions for operating certain equipment used in the area of woodworking. Each set of safety instructions relating to the operation of a particular piece of equipment is followed by safety test questions. The general safety instructions, as well as instructions in other sections of this safety guide, may also apply to the area of woodworking equipment.

19 Prior to backing out of a long cut, turn the machine off and wait until it comes to a complete stop

20 Keep waste from accumulating on the saw table.

21. Step away immediately if the saw breaks or comes off. Shut off the power, if possible, without endangering yourself and notify your teacher.

22 Turn off power after using the band saw (use brake if available) and stand by until machine has come to a dead stop.

23 Clear away scraps of wood on the table only after the saw stops running.

24 Be sure that the blade remains in the guides before re-starting or leaving the machine Do not attempt to push the blade back into the guides with the motor running.

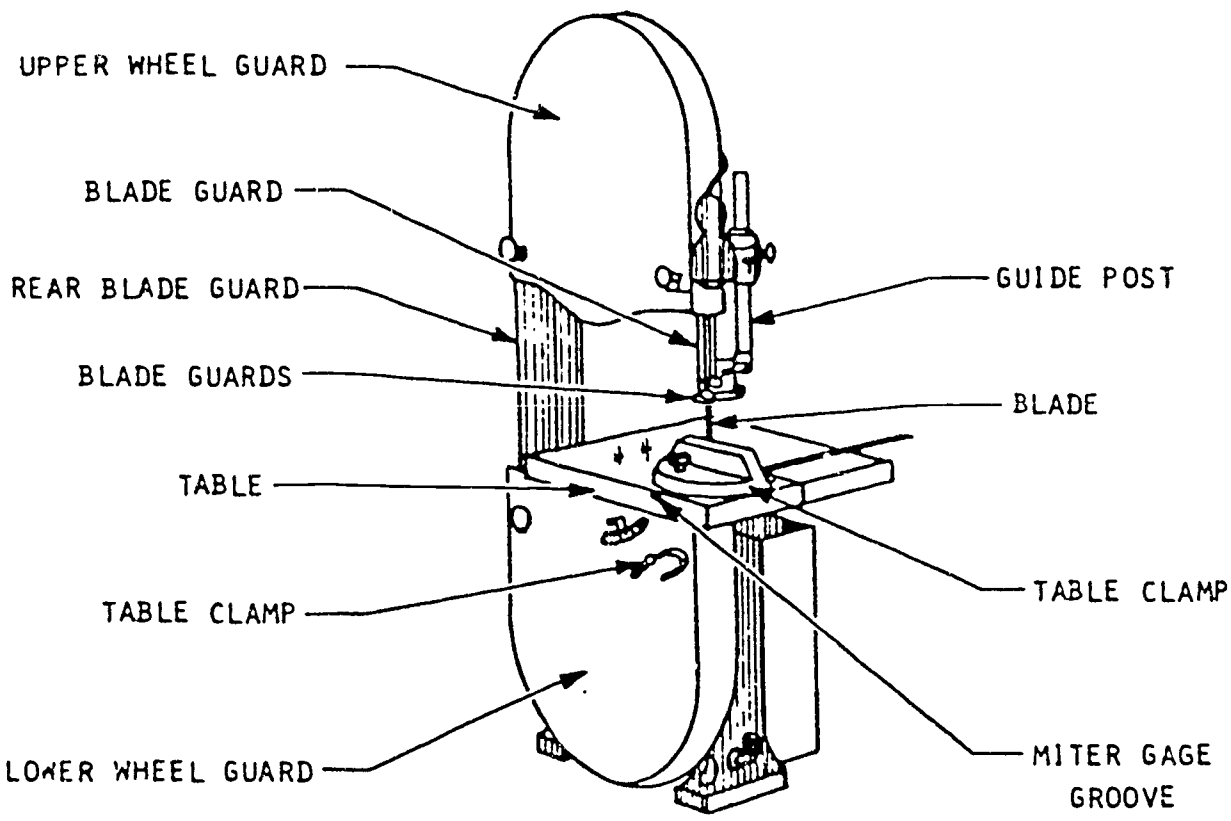

Band Saw

Instructions. Do not mark in this test book. Read each question carefully and select the most correct answer. After you have selected the correct answer mark your selection on the answer sheet provided

SAFETY TEST QUESTIONS

( ) 1. You should make all adjustments on the band saw. (a) only when the machine is at a dead stop, (b) more than 1/2" above the stock, (c) while the machine is coasting, or (d) only when the power is on.

( ) 2. It is best to set the upper saw guide of the band saw (a) when the power is off and the saw is coasting; (b) 1/4" or less above the stock; (c) tight against the stock; or (d) 1/2" or more above the stock.

( ) 3. You should plan your sawing procedure on the band saw so that. (a) small curves can be cut easily with wide blades, (b) there will be a maximum forward feed with a minimum of backing out cuts, (c) there will be a little scrap left on the table, or (d) back-outs can be made after each 1/2" of forward feed.

( ) 4. When it becomes necessary to back out stock from a long cut on the band saw, you should (a) carefully back the stock away while the blade is in motion; (b) stop the machine, then back out the stock, (c) try to turn the stock on the table; or (d) continue to saw forward

( ) 5 If the band saw blade breaks or comes off, you should. (a) call another student to shut off the power, (b) back your stock away from the blade immediately so as to avoid damage to your work; (c) continue cutting until the blade comes to a stop; or (d) step away immediately, shut off the power (without endangering yourself) and then notify your teacher.

( ) 6. The only person who can approve special set-ups on the band saw is (a) your bench partner, (b) your teacher; (c) the lab foreman; or (d) yourself.

( ) 7. Material to be cut on the band saw should be, (a) clamped to the table, (b) held loosely; (c) held firmly; or (d) not held while the blade is moving.

( ) 8. When backing out of a long band saw cut the machine should (a) come to a dead stop, (b) never be stopped; (c) speed up; or (d) maintain the same rate of speed

( ) 9. If a band saw blade should break, the operator should. (a) stay with the machine, (b) try to slow the machine down, (c) lower the table, or (d) step away, shut off the power if possible and notify the teacher

FILL - IN

Read each of the following statements and add the missing word. Write your response in the space provided on the answer sheet. Do not write in the test booklet.

1 Plan sawing procedures so that there is a maximum _____ feed with a minimum of backing out cuts.

2. Cut only stock with a _____ surface.

3. Be sure all _____ are in place.

4 Ask the _____ to approve all special set-ups on the band saw.

5 Upper saw guide should be _____ inch or less above stock to be cut

6. Keep fingers a safe distance from the saw _____

7. Feed material into the machine at a _____ rate of speed.

8 Use a _____ stick when sawing small stock.

IDENTIFY PARTS

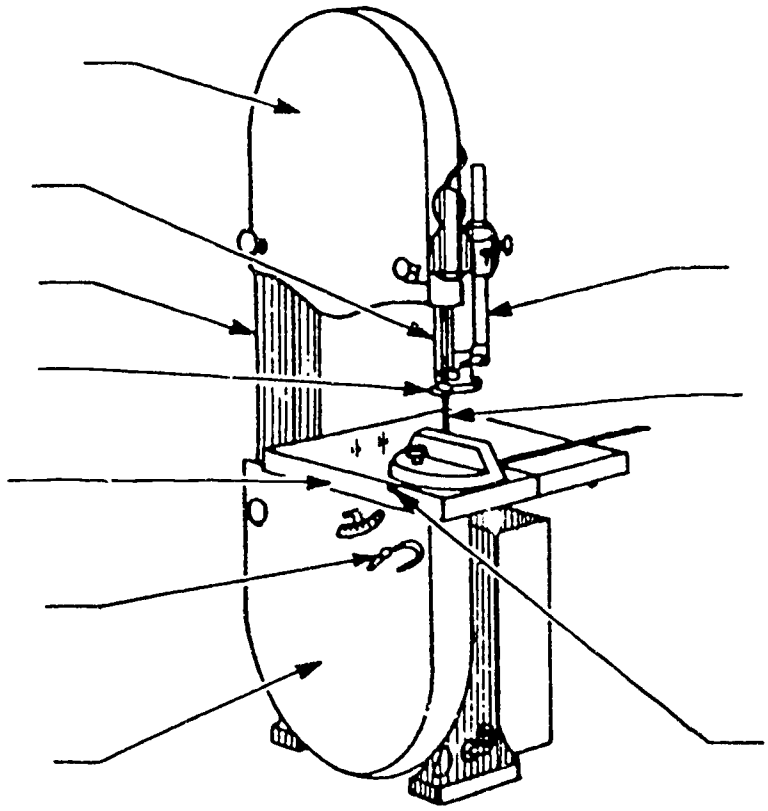

Circular Saw

SAFETY INSTRUCTIONS

1. Obtain permission from your teacher before using the circular saw.

2 Be sure that all lumber to be cut is free from loose knots, nails, sand or paint.

3 Select and install proper saw blade for ripping material or cutting across the grain. Make sure that blade is sharp and free of cracks or other defects. Hold blade with waste piece of wood when loosening or tightening the arbor nut.

4 Be sure power to the machine is off (breaker) before changing blades.

5. Limit saw blade extension to 1/8 inch or less above the stock being cut.

6. See that the rip fence, guards and other safety devices are in their proper position and locked in place.

7 Ask your teacher to approve all special set-ups and dado heads.

8 Use ripping fence or cut-off gauge/mitre gauge when cutting material. See that a cut-off board is properly mounted on cut-off gauge

9 Fasten a clearance block to the ripping fence when cross cutting a number of short pieces to length (when ripping fence is used as a stop gauge.)

10 Use a holding jig or a method of clamping for cutting cylindrical stock. Check with your teacher

11 Be certain that there is an adequate number of proper push sticks immediately available.

12 Make sure that no one but you is inside of the operator's zone. Do not talk to anyone while operating the saw.

13 Stand to one side of the line of the saw

14 Wear face shield or safety glasses (goggles, spectacles .)

15 Turn on power only after permission is given.

16. Keep fingers clear of path to the saw blade. Never reach over the blade.

17 Stop saw and move out of operating zone before responding to anyone trying to attract your attention.

18. Use approved push stick when ripping narrow pieces of stock

19. Feed stock only as fast as the saw will freely cut.

Circular Saw

Instructions. Do not mark in this test book. Read each question carefully and select the most correct answer. After you have selected the correct answer mark your selection on the answer sheet provided

SAFETY TEST QUESTIONS

( ) 1. The guard must always be in place over the saw blade of the circular saw except when: (a) cutting stock with a thickness of more than 1 inch. (b) cutting short pieces that tend to catch under the guard, (c) using a thick blade; or (d) your teacher has authorized its removal for special set-ups.

( ) 2. All adjustments on the circular saw are made (a) while the machine is coasting, (b) by the lab foreman; (c) while the machine is at a dead stop: or (d) while the power is on

( ) 3. You should limit the extension of the circular saw blade above the stock being cut to (a) 1 inch, (b) 1/4 inch; (c) 1/8 inch; or (d) 1/2 inch

( ) 4. When tailing off on the circular saw, the helper must. (a) support stock from underneath but not grasp it; (b) pick up all tailings that might cause an accident; (c) use a brush when cleaning up tailings: or (d) hold the stock and pull gently

( ) 5. You should use a push stick when operating the circular saw to. (a) rip short and narrow pieces of stock; (b) adjust the saw; (c) turn off the power; or (d) remove scraps.

( ) 6. Before sawing any lumber, the lumber should be inspected to insure that it is: (a) free from loose knots, nails, sand or paint; (b) freshly sanded; (c) freshly painted; or (d) kiln dried

( ) 7. When loosening or tightening the arbor nut, the blade should be: (a) held with the left hand, (b) have the teeth pointed away from the front of the saw, (c) held with a piece of scrap wood, or (d) held by another student.

( ) 8. Freehand sawing on the circular saw. (a) is allowed in special occasions, (b) includes using the fence; (c) includes using the mitre gauge; or (d) is never allowed.

( ) 9 Material to be sawed. (a) must have a straight edge, (b) must have an uneven edge, (c) must have some warping; or (d) may include open knots.

FILL - IN

Read each of the following statements and add the missing word Write your response in the space provided on the answer sheet. Do not write in the test booklet.

1 Be sure that the lumber is free from loose _____ , nails, sand or paint

2 Be sure that the blade is _____ .

3 Make adjustments only when the machine is at a _____ stop.

4. Limit saw blade extension to _____ inch or less above the stock being cut

5 See to it that the rip fence, _____ and other safety devices are all in place and in good working order.

6 Ask the _____ to approve all special set-ups and dado heads.

7. Wear _____ shield or safety glasses (goggles, spectacles) at all times when operating the circular saw.

8 Keep fingers clear of the _____ of the saw blade

IDENTIFY PARTS

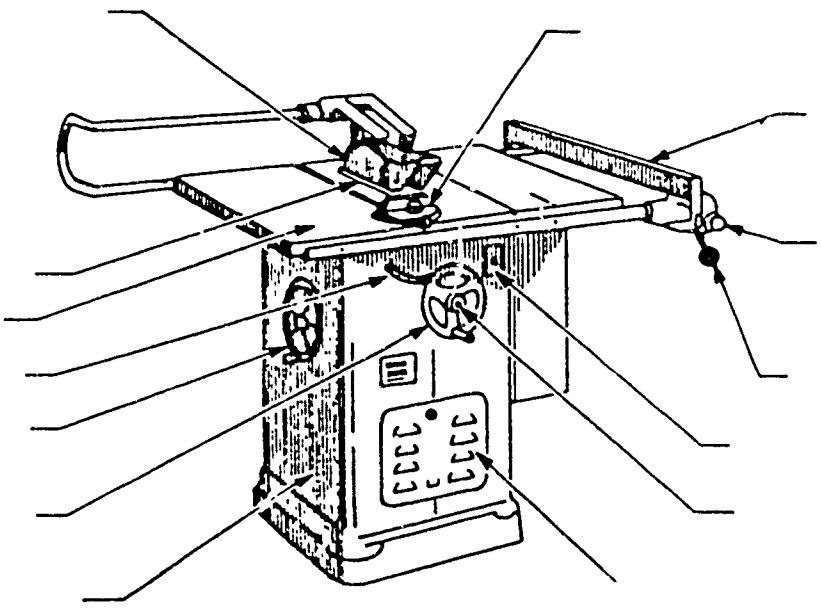

Jointer

SAFETY INSTRUCTIONS

1. Obtain permission from your teacher before using jointer.
2. Use only clean lumber.
3. Inspect all wood for checks, loose knots or other defects including nails and paint.
4. Make sure that only stock 12 inches or longer and no less than 1/2 inch in thickness is used on the jointer.
5. Clamp fence firmly.
6. See that guard is in place over the knives and moves freely.
7. Make adjustments only when machine is at a dead stop.
8. Limit cuts to 1/8 inch or less.
9. Ask your teacher to approve all set-ups involving stop-cuts, beveling, tapering or rabbeting
10. Make sure that no one but you is inside the operator's zone. Do not stand directly in line with the tables to avoid a possible kickback
11. Wear face shield or safety glasses (goggles, spectacles .)
12. Turn on power only after permission is given.
13. Keep hands at a safe distance from the revolving head.
14. Use an approved pusn stick whenever possible.
15. Whenever possible, allow two fingers of the right hand to ride along the top of the fence when push stick is not being used.
16. Feed the stock slowly.
17. Push the stock far enough past the knives so that the guard will return before picking up the stock
18. Turn off power after using the jointer and stand by until the machine has come to a dead stop
19. Check the grain of the lumber to be certain the knives are cutting with the grain and not against
20. End grain should not be jointed without special permission and supervision by the teacher
21. When long pieces must be jointed, request assistance from the teacher.
22. Make sure that the floor area around the jointer is clean and free of scraps.
23. Do not talk to anyone or allow anyone to distract your attention while operating the jointer
24. When facing stock, be sure to use an appropriate push stick.

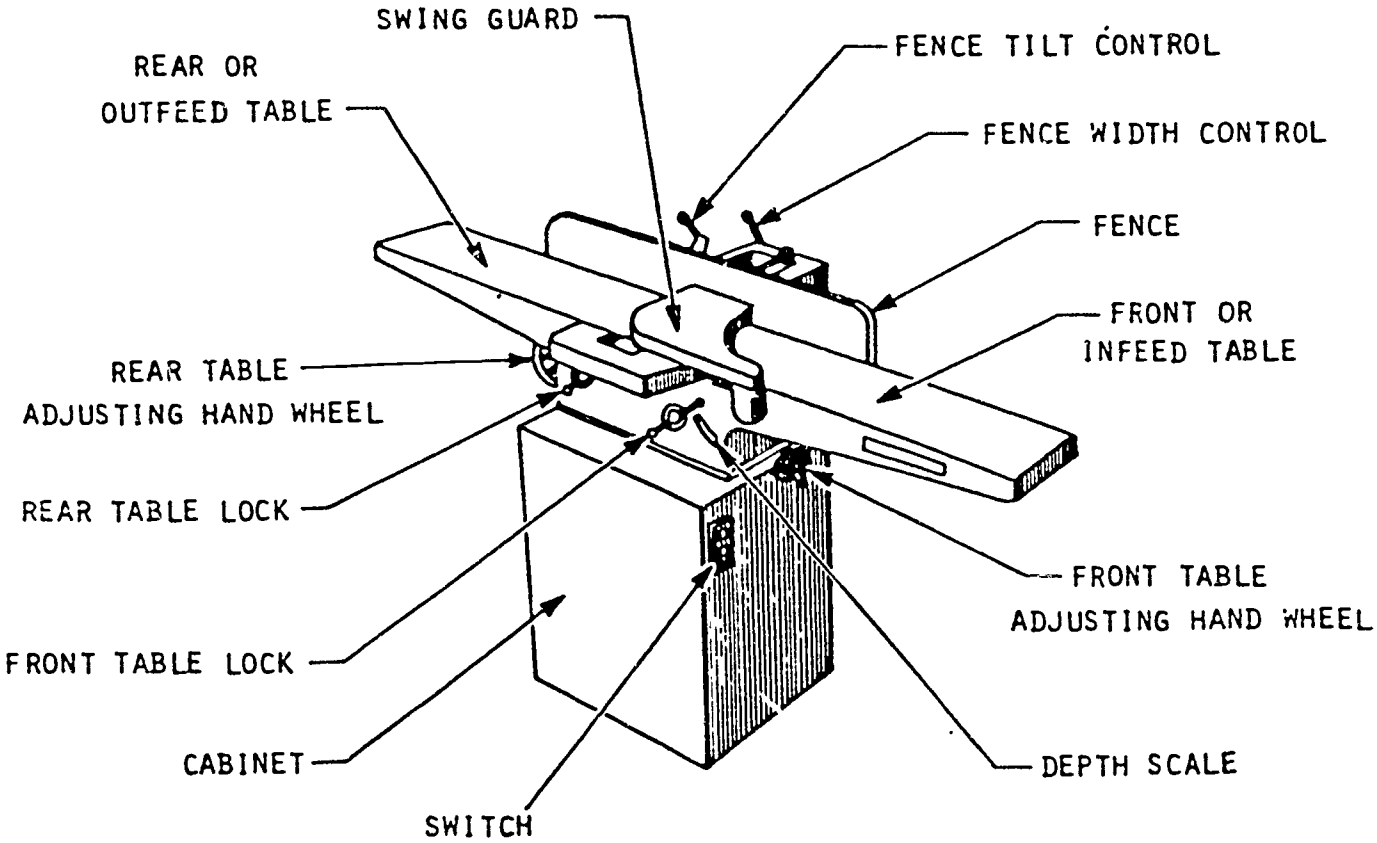
SWING GUARD
FENCE TILT CONTROL
REAR OR
OUTFEED TABLE
FENCE WIDTH CONTROL
FENCE
FRONT OR
INFEED TABLE
REAR TABLE
ADJUSTING HAND WHEEL
REAR TABLE LOCK
FRONT TABLE
ADJUSTING HAND WHEEL
FRONT TABLE LOCK
CABINET
DEPTH SCALE
SWITCH

Jointer

Instructions. Do not mark in this test book. Read each question carefully and select the most correct answer. After you have selected the correct answer mark your selection on the answer sheet provided

SAFETY TEST QUESTIONS

( ) 1. The jointer is used for smoothing. (a) painted stock, (b) lumber containing knots and cracks, (c) warped stock; or (d) clean lumber only.

( ) 2. In adjusting the depth of cut on the jointer, you should limit cut to (a) 1/6 inch, (b) 1/8 inch, (c) 1/4 inch; or (d) 3/16 inch.

( ) 3 The shortest length of stock that can be safely cut on the jointer is. (a) 6 inches, (b) 4 inches, (c) 18 inches; or (d) 12 inches.

( ) 4. When facing stock on the jointer, you should. (a) use an approved push stick whenever possible; (b) remove the guard from over the knives, (c) limit depth of cut to 1/2 inch; or (d) feed stock as fast as possible.

( ) 5. Before picking up stock that has been surfaced on the jointer, you should make sure that you have pushed the stock far enough past the knives so that the (a) stock drops clear off the table (b) outfeed table raises the material above the level of the knives, (c) fence will cover the work; or (d) guard will return over the cutter knives.

( ) 6. The depth of cut on the jointer is adjusted by. (a) moving the back or rear table up and down, (b) moving the fence, (c) moving the front table up and down; or (d) moving the cutting arbor up or down.

( ) 7. The thinnest piece of stock that can be safely run on the jointer is. (a) 1 inch; (b) 1 1/2 inches; (c) 1/4 inch; or (d) 1/2 inch.

( ) 8. Adjustments may be made on the jointer when (a) it is at a dead stop, (b) stock is pushed across the knives, (c) the push stick is being used, or (d) guard is returned over the cutter knives.

( ) 9. An operator should stand out-of-line of the jointer tables to avoid (a) falling down, (b) millmarks in the stock; (c) kickbacks; or (d) talking to another student.

( ) 10. The guard should be in place over the knives and checked to see that it (a) is locked, (b) moves vertically; (c) slightly resists movement; or (d) moves freely.

FILL - IN

Read each of the following statements and add the missing word. Write your response in the space provided on the answer sheet. Do not write in the test booklet.

1. Make sure that the stock is_____ inches long or longer before jointing
2. Do not joint stock which is less than _____ thick.
3. Be sure that the guard over the knives _____ freely
4. Make adjustments only when the machine is at a _____ stop.
5. Keep hands a safe distance from the _____ head
6. Feed stock_____ .
7. Push stock far enough past the _____ to allow the guard to return.
8. Use an approved _____ stick whenever possible.

IDENTIFY PARTS

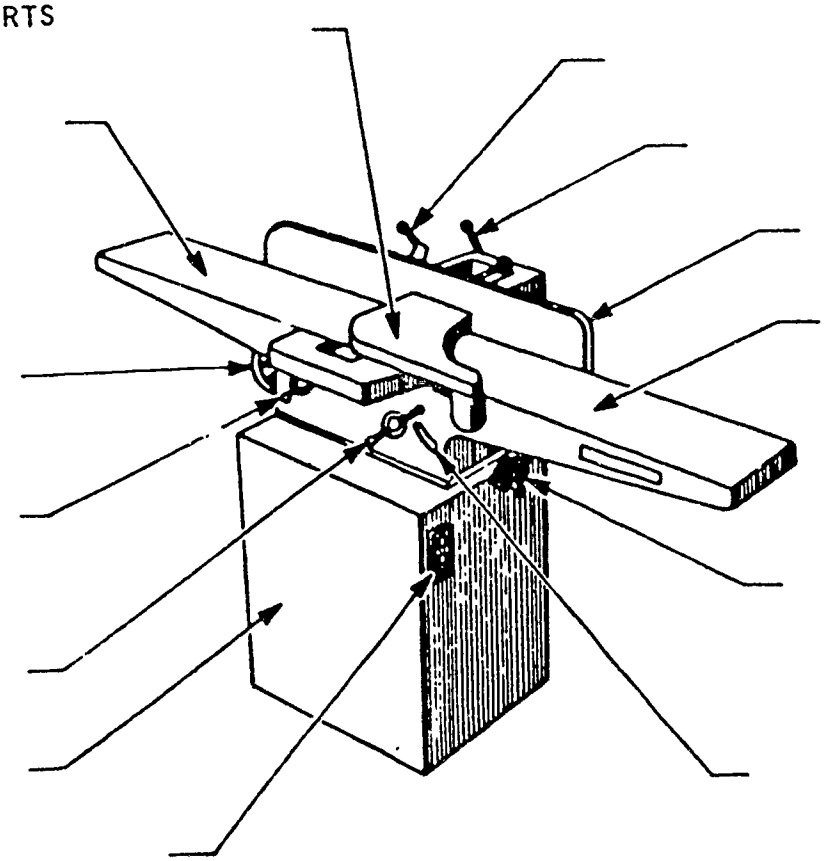

Lathe

SAFETY INSTRUCTION

1. Obtain permission from your teacher before using lathe.
2. Roll loose sleeves above elbows and remove or fasten any loose clothing.
3. Make sure that the stock is free from checks, loose knots, improperly glued joints or other defects
4. Make certain that all glued work is properly glued and dried overnight.
5. Be sure that stock is correctly mounted in lathe.
6. Clamp tool rest holder firmly.
7. Be certain tool rest is adjusted correctly.
8. Make adjustments of tool rest only when lathe is at a dead stop. Tool rest should be approximately 1/8 inch from stock and no more than 3/8 inch away at any time..
9. Shift belt on belt-driven lathes (for change of speed) only when lathe is at a dead stop. If the machine you are operating can only be adjusted while in operation, check with teacher before adjusting.
10. Check sharpness of turning tools and condition of handles.
11. Wear face shield or safety glasses (goggles, spectacles .)
12. Start lathe at lowest speed when beginning operation.
13. Stand to one side when power is first turned on
14. Grasp turning tool firmly with both hands while cutting stock.
15. Hold turning tool firmly against the rest. Do not leave tools on the bed of the lathe
16. Keep hands away from stock while it is revolving.
17. Use correct amount of tool pressure against stock.
18. Stop lathe when using inside or outside calipers.
19. Remove tool rest when sanding and finishing.
20. When polishing, only used a small rag that has been folded into a pad
21. Shut off power after using lathe and stand by until the machine has come to a dead stop
22. Clean machine after use

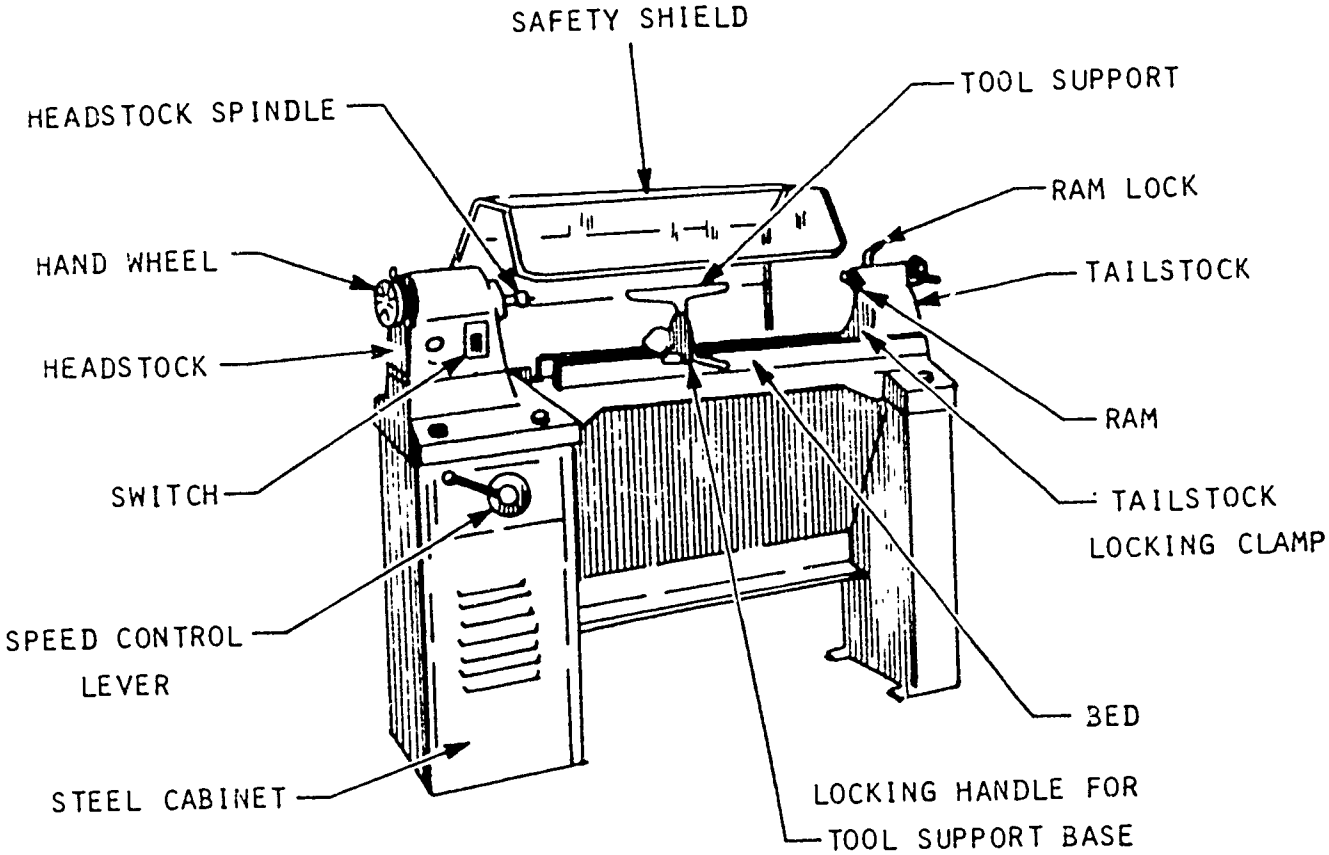
SAFETY SHIELD
TOOL SUPPORT
HEADSTOCK SPINDLE
RAM LOCK
HAND WHEEL
TAILSTOCK
HEADSTOCK
RAM
SWITCH
TAILSTOCK
LOCKING CLAMP
SPEED CONTROL
LEVER
BED
STEEL CABINET
LOCKING HANDLE FOR
TOOL SUPPORT BASE

Lathe

SPINDLE TURNING INSTRUCTIONS

1. See that centers are properly embedded in the stock
2. Use oil or beeswax on the dead center.
3. Clamp tailstock firmly in place and tighten screw.
4. Turn spindle (rough stock) one revolution by hand.
5. Start lathe at lowest speed when beginning operation and making no rough cuts.
6. Rough stock down to cylindrical form before using high speed. Maintain correct tool adjustment Check tail stock adjustment frequently.
7. Govern speed according to the diameter of the work.

Lathe

FACEPLATE TURNING INSTRUCTIONS

1 Cut stock circular on band saw or scroll saw.
2. Select proper size and style of faceplate.
3. Choose the correct size and number of screws according to design of work.
4 Fasten stock or sub-base glued to stock (through paper) to faceplate with screws.
5. Be sure screws are tight.
6 Have teacher check fastenings and adjustments.
7. Keep an accurate check on depth of cut in work to avoid striking screws.
8 Be certain that tool rest adjustment is correct and correctly maintained.
9 Revolve work once by hand.
10. Use the lowest speed when beginning operation.
11. Use correct speed in relation to diameter of stock
12. Make frequent inspection of screws to be sure they do not loosen.

Lathe

Instructions. Do not mark in this test book. Read each question carefully and select the most correct answer. After you have selected the correct answer mark your selection on the answer sheet provided

SAFETY TEST QUESTIONS

( ) 1. As soon as stock is located between centers for spindle turning, you should· (a) clamp tailstock firmly in place and tighten screw, (b) remove tailstock and mount steady rest on the ways, (c) rotate stock counterclockwise to avoid burning, or (d) have it inspected by another student.

( ) 2. You should make all adjustments of the lathe tool rest. (a) while machine is rotating slowly, (b) after initial cuts are made, (c) when lathe is at a dead stop, or (d) 2 inches below center of stock.

( ) 3. It is best to set lathe tool rest so it is. (a) in slight contact with the stock, thus reducing chatter, (b) below and to right of center; (c) the same width as the lathe tool being used, or (d) 1/8 inch or less from the rough stock.

( ) 4 When starting lathe for a beginning operation, you should use. (a) the highest speed, (b) the lowest speed; (c) any belt or gear ratio; or (d) a tool rest with a 3.1 ratio.

( ) 5. You should hold lathe turning tool. (a) to the right of the tool rest, (b) flat on the tailstock, (c) firmly against the tool rest; or (d) just above the tailstock.

( ) 6. Before starting the lathe, always turn the stock by hand to see that it clears the (a) faceplate, (b) headstock; (c) tailstock; or (d) tool rest.

( ) 7. To turn a bowl, the stock is fastened to the. (a) tool rest, (b) headstock, (c) faceplate, or (d) tailstock.

( ) 8. The turning tool should be held (a) firmly with the left hand, (b) loosely with the right hand, (c) loosely with both hands; or (d) firmly with both hands.

( ) 9. While determining tolerance with a caliper, the lathe. (a) must be stopped, (b) may continue to run at highest and safest speed, (c) must be slowed almost to a stop, or (d) may run at an intermediate speed

( ) 10. The correct speed for the roughing operation is. (a) intermediate, (b) slow, (c) fast; or (d) very fast.

FILL - IN

Read each of the following statements and add the missing word. Write your response in the space provided on the answer sheet Do not write in the test booklet.

1. Roll sleeves above _____ and remove or fasten any loose clothing.

2. Make certain that the stock is free from _____ , loose knots, improperly glued joints or other defects.

3 Clamp tool rest holder approximately _____ inch(es) from the stock

4 The tool rest should never be more than _____ inch(es) from the stock.

5 Ask the _____ to check to see that stock is correctly mounted before starting the lathe.

6 Grasp the _____ tool with both hands while cutting stock.

7 Hold the turning tool firmly against the tool _____ .

8. Keep hands away from _____ while it is revolving

IDENTIFY PARTS

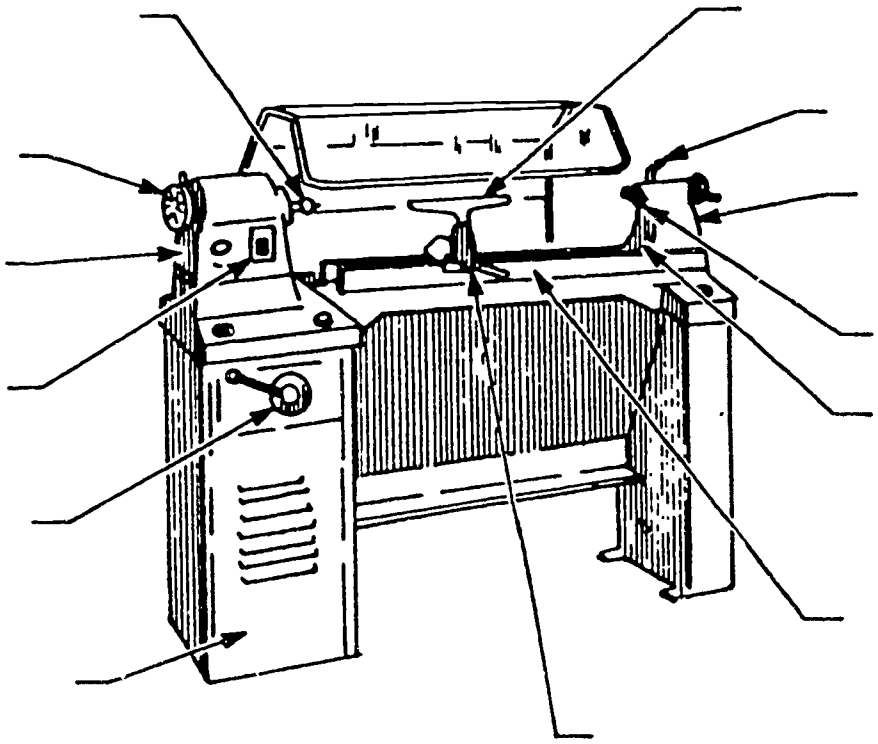

Planer (Surfacer)

SAFETY INSTRUCTION

1 Obtain permission from your teacher before using planer.

2 Use only clean lumber.

3. Be sure that all wood is free of loose knots or other defects.

4. Make sure that length of stock is longer than the distance between the centers of the feed rolls

5 Make adjustments only when machine is at a dead stop.

6. Adjust cut to measurements taken on thickest part of the board.

7 Limit cuts to 1/8 inch or less on narrow stock and softwoods.

8. Limit cuts on wide stock to 1/16 inch or less on hardwoods.

9. Run thin stock through planer on top of a thick, surfaced board.

10. Make sure that no one but you is inside the operator's zone.

11. Wear face shield or safety glasses (goggles, spectacles), and hearing protection

12 Turn on power only after permission is given. Make sure machine is a full R P M. before feeding in material.

13. Stand to one side of planer when machine is in operation.

14 Keep hands away from feed rolls and away from board(s) already gripped by the feed rolls

15. Turn off the power and call your teacher if machine does not seem to operate correctly

16. Allow material to travel completely through planer before making any additional depth of cut adjustment.

17 Turn off power after using planer and stand by until machine has come to a dead stop

18 Make sure that floor and surrounding work area is free of scraps and chips.

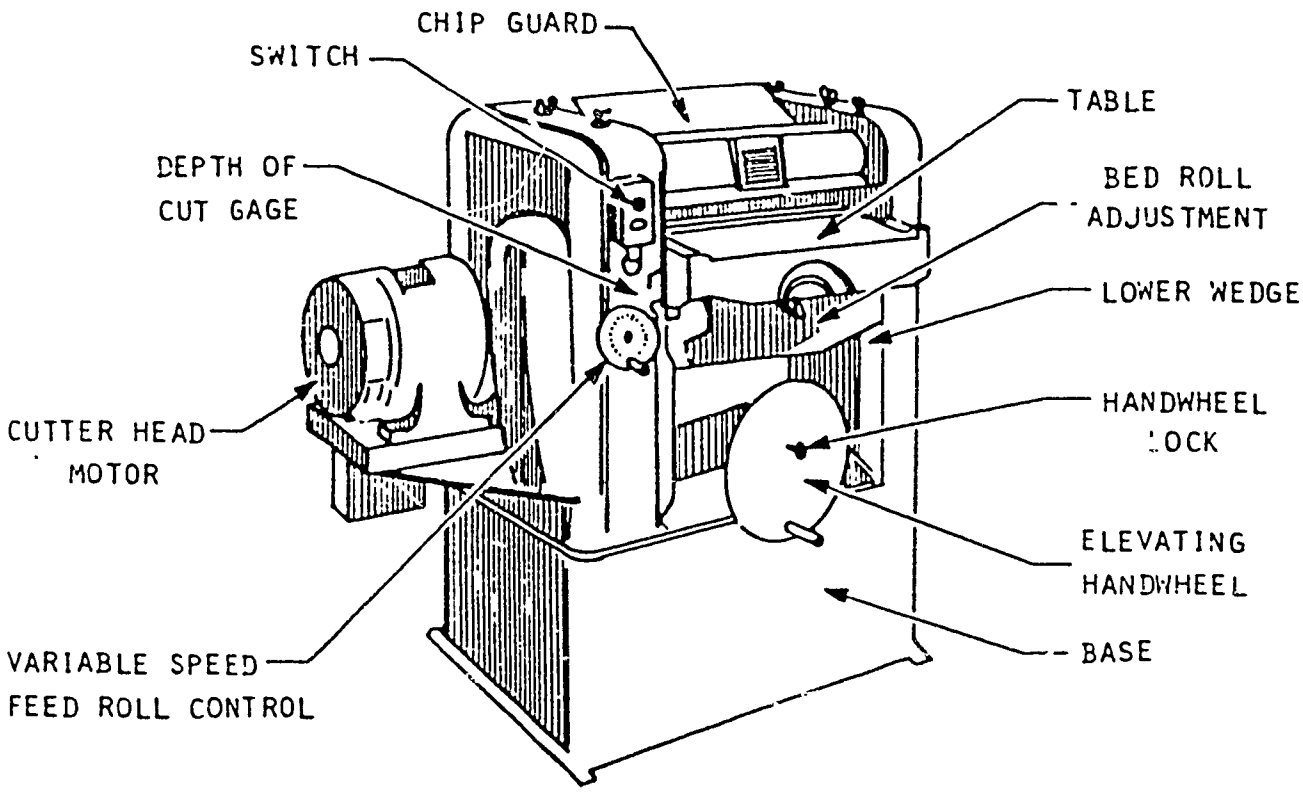
CHIP GUARD
SWITCH
TABLE
DEPTH OF
CUT GAGE
BED ROLL
ADJUSTMENT
LOWER WEDGE
HANDWHEEL
LOCK
CUTTER HEAD
MOTOR
ELEVATING
HANDWHEEL
BASE
VARIABLE SPEED
FEED ROLL CONTROL

FILL - IN

Read each of the following statements and add the missing word Write your response in the space provided on the answer sheet. Do not write in the test booklet

1. Only _____ lumber should be run through the planer
2. Stock needs to be longer than the distance between the _____ rollers.
3. Limit cuts to _____ inch(es) or less on narrow stock or softwoods
4. Limit cuts to _____ inch(es) or less on wide stock or hardwood
5. Wear a _____ shield or safety glasses (goggles, spectacles) when operating the planer
6. Stand to one side when the _____ is in operation
7. Keep hands away from _____ rolls and away from boards already gripped by the machine
8. Turn off the power and _____ until the machine comes to a complete stop.

IDENTIFY PARTS

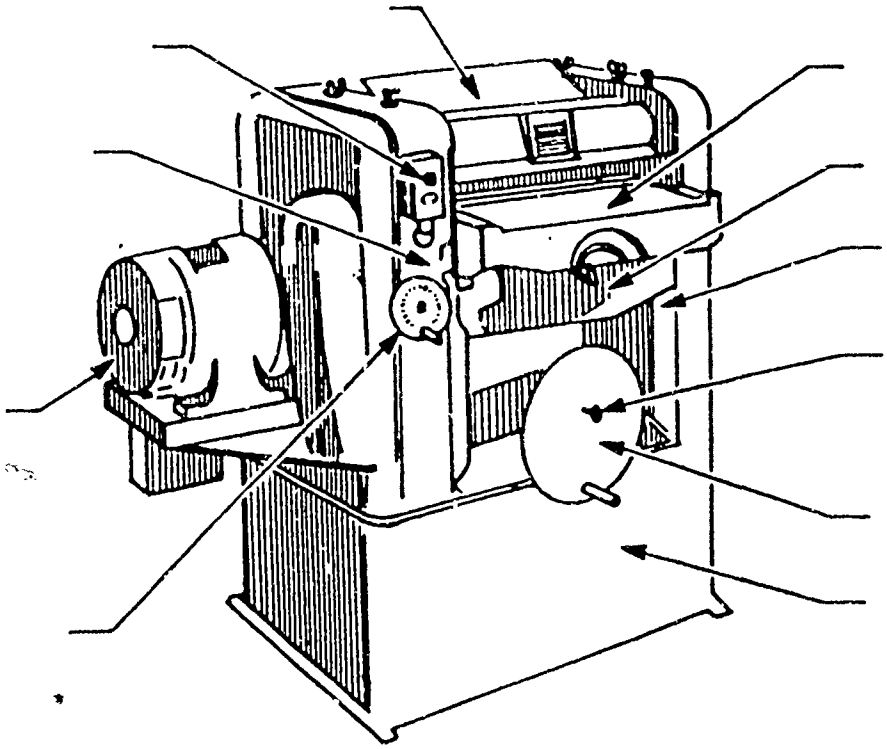

84

Radial - Arm Saw

SAFETY INSTRUCTION

1 Obtain permission from your teacher before using radial - arm saw. The radial - arm saw is used primarily for cross cutting stock too long for the circular saw.

2. Ask your teacher to approve all special set-ups.

3 Make sure that no one but you is inside the operator's zone

4 Wear face shield or safety glasses (goggles, spectacles.)

5. Hold stock firmly against fence

6. Stand to one side and keep hands away from the path and direction of travel of saw blade

7. Feed saw into material only as fast as it will easily cut.

8. Cut only one piece of stock at a time.

9 Use a piece of wood to remove scraps from path of saw blade only when saw is at a dead stop

10 Turn off power after using radial - arm saw, carefully return saw to beginning position behind guide fence and stand by until machine has come to a dead stop.

11. Make sure that all adjustments are tight and all guards are in place

12. Do not leave the machine while it is running or coasting If saw is equipped with a brake, stop the saw completely before leaving the operator's zone.

13. Make sure that portion of table directly underneath saw blade is free of knots, nails or other foreign matter.

14 Special permission and supervision must be obtained to rip with the radial saw.

15 The work area including saw table must be left clean and clear of scrap

16 When changing blades or adjusting depth of cut, tighten the rip lock to prevent the saw from running forward when turned on.

17. Make sure the saw blade is not engaging the material before starting the saw

18 In cross cutting operations, the operator should hold the stock with the left hand and pull the saw through with the right hand.

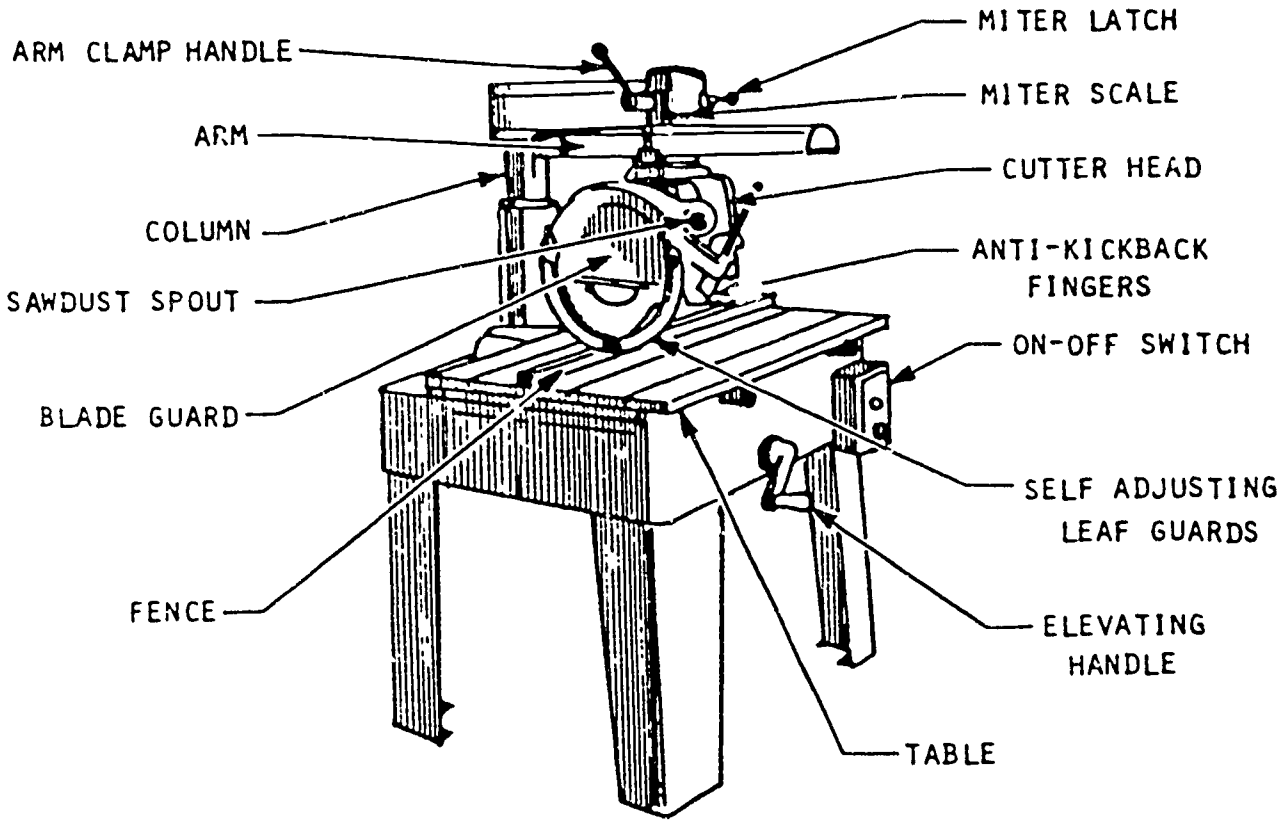
ARM CLAMP HANDLE
ARM
COLUMN
SAWDUST SPOUT
BLADE GUARD
FENCE
MITER LATCH
MITER SCALE
CUTTER HEAD
ANTI-KICKBACK FINGERS
ON-OFF SWITCH
SELF ADJUSTING LEAF GUARDS
ELEVATING HANDLE
TABLE

FILL - IN

Read each of the following statements and add the missing word Write your response in the space provided on the answer sheet. Do not write in the test booklet.

1. Hold stock firmly _____ the fence

2. Stand to one side and keep hands away from the path and direction of _____ of the saw blade.

3 Feed saw into material only as _____ as it will easily cut

4 Make sure that all _____ are tight and all guards are in place.

5 Cut only _____ piece of stock at a time.

6. Do not leave the machine while it is _____ or coasting to a stop.

7 Return the saw to its starting _____, behind the guide fence

8 W' . cross cutting, hold the stock with your _____ ____ hand and pull the saw through with ur right hand

IDENTIFY PARTS

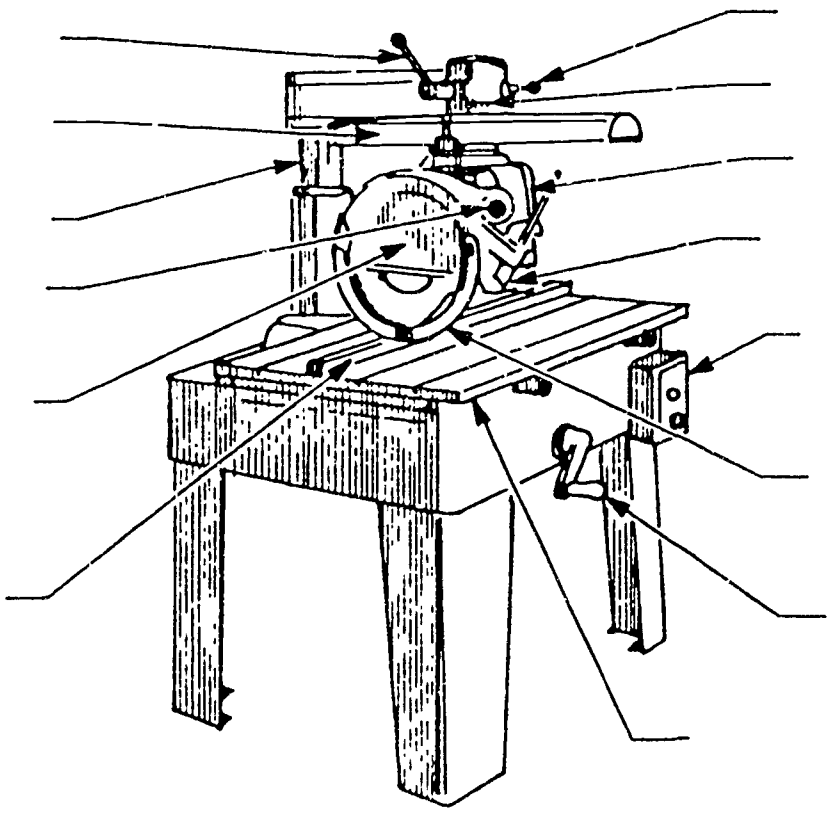

Router

SAFETY INSTRUCTION

1. Obtain permission from your teacher before using the router.

2. Fasten stock firmly with a vise or clamp.

3. Make adjustments only when electnc cord is disconnected from power source.

4. Tighten all bits and cutters with proper wrenches. Insert router bit at least 1/2 inch into the chuck Turn router by hand to make sure that bit clears base

5 Ask your teacher to approve set-up and adjustments.

6. Be sure that the switch is in an off position and machine is on its side before plugging in electric cord. Release motor locking device before plugging in to power source.

7 Wear face shield or safety glasses (goggles, spectacles) and hearing protection

8. Hold the machine firmly with both hands when turning on power.

9 Turn on power only after permission is given Make sure cutter is not in contact with material when power is turned on.

10. Keep hands clear of revolving cutters.

11. Feed the cutter slowly into the material.

12. Turn off power and set machine on its side when a desired cut has been finished.

13 Disconnect electric cord Clean and return machine and its parts to designated place

14 You should select an area that is dry and not grounded when using a portable electnc tool to avoid electrical shock.

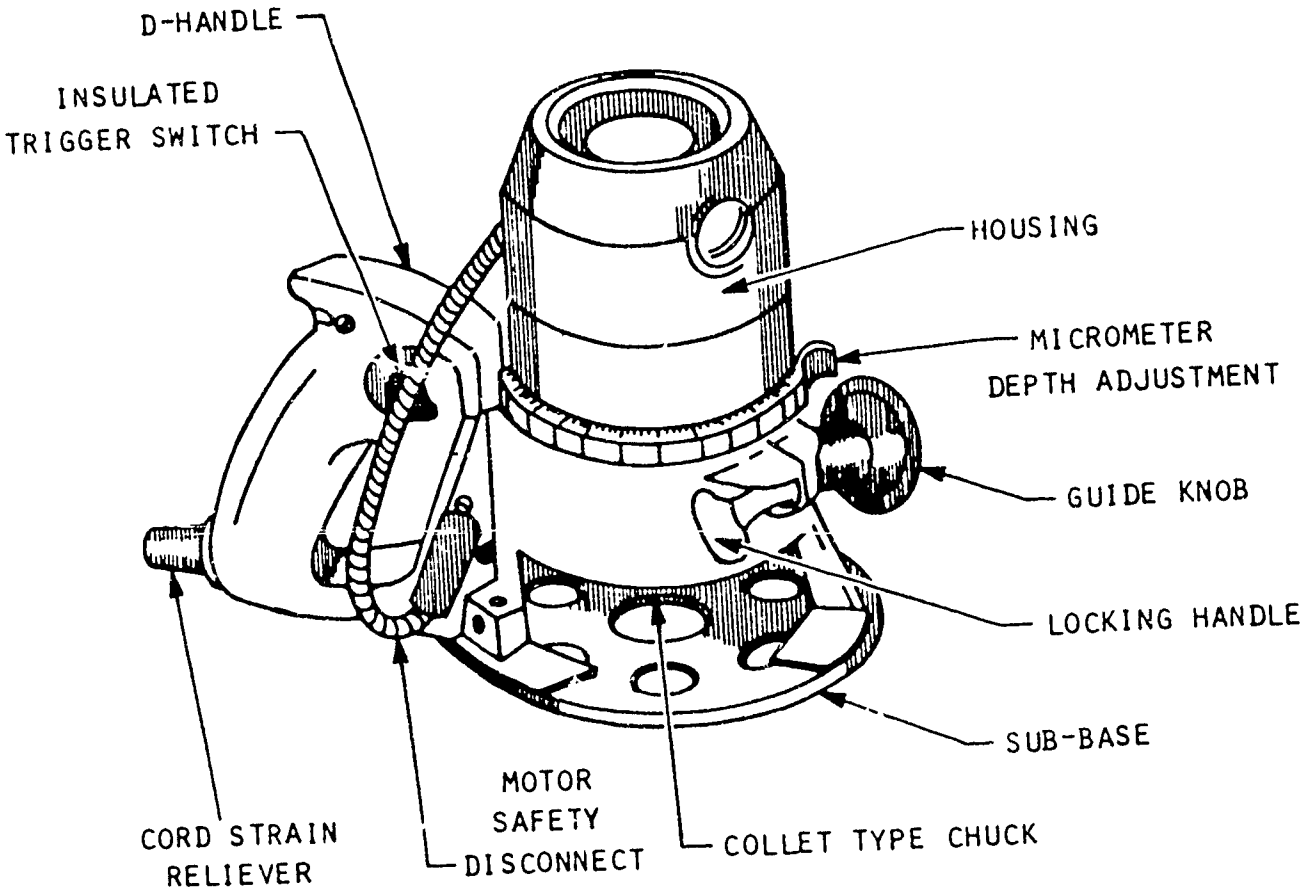
D-HANDLE
INSULATED
TRIGGER SWITCH
HOUSING
MICROMETER
DEPTH ADJUSTMENT
GUIDE KNOB
LOCKING HANDLE
SUB-BASE
CORD STRAIN
RELIEVER
MOTOR
SAFETY
DISCONNECT
COLLET TYPE CHUCK

Router

Instructions Do not mark in this test book. Read each question carefully and select the most correct answer. After you have selected the correct answer mark you selection on the answer sheet provided

SAFETY TEST QUESTIONS

( ) 1. You should select a location that is dry and not grounded for using a portable electric tool or appliance so as to avoid: (a) soiling the equipment: (b) serious electric shock, (c) motor bearing deterioration; or (d) discoloring the electric cord.

( ) 2. Prior to using the router, you should: (a) request other students to stay at least ten feet from the area of operation; (b) turn blades by hand; (c) have machine turned on before connecting electric cord; or (d) obtain permission from teacher.

( ) 3. Before changing bits or cutters or making adjustments on the router, you should make sure (a) the electric cord is disconnected from the power source, (b) other students are at a safe distance; (c) to turn blades by hand; or (d) one hand is free.

( ) 4. When turning on the power to the router, you should: (a) attempt to make as deep a cut as possible; (b) hold the machine firmly with both hands; (c) readjust bits and cutters, or (d) reverse motor rotation.

( ) 5. When cutting with the router, you should. (a) feed the cutter as fast as possible, (b) hold electric cord with one hand; (c) keep hands clear of the revolving cutters, or (d) rest machine on its side.

( ) 6 The router bit should be inserted into the chuck at least: (a) 1 inch, (b) 3/4 inch, (c) 1/4 inch, (d) 1/2 inch.

( ) 7 The only person who can approve set-ups and adjustments is (a) the teacher, (b) yourself, (c) your bench partner; or (d) the lab foreman.

( ) 8. Before connecting the electric cord to the power source, the router must be (a) on its top. (b) on its side; (c) in its case, or (d) clamped to the table.

FILL - IN

Read each of the following statements and add the missing word Write your response in the space provided on the answer sheet. Do not write in the test booklet.

1. Be sure that the stock is _____ firmly with a vise or clamp.

2 Make adjustments with the _____ ____ disconnected from the power source.

3 Be sure that the switch is in the _____ position and the machine is on its side before plugging it in

4. Always wear a _____ shield, safety glasses (goggles, spectacles) and hearing protection when operating the router.

5 Keep hands clear of revolving _____

6 Feed cutter _____ into the material

IDENTIFY PARTS

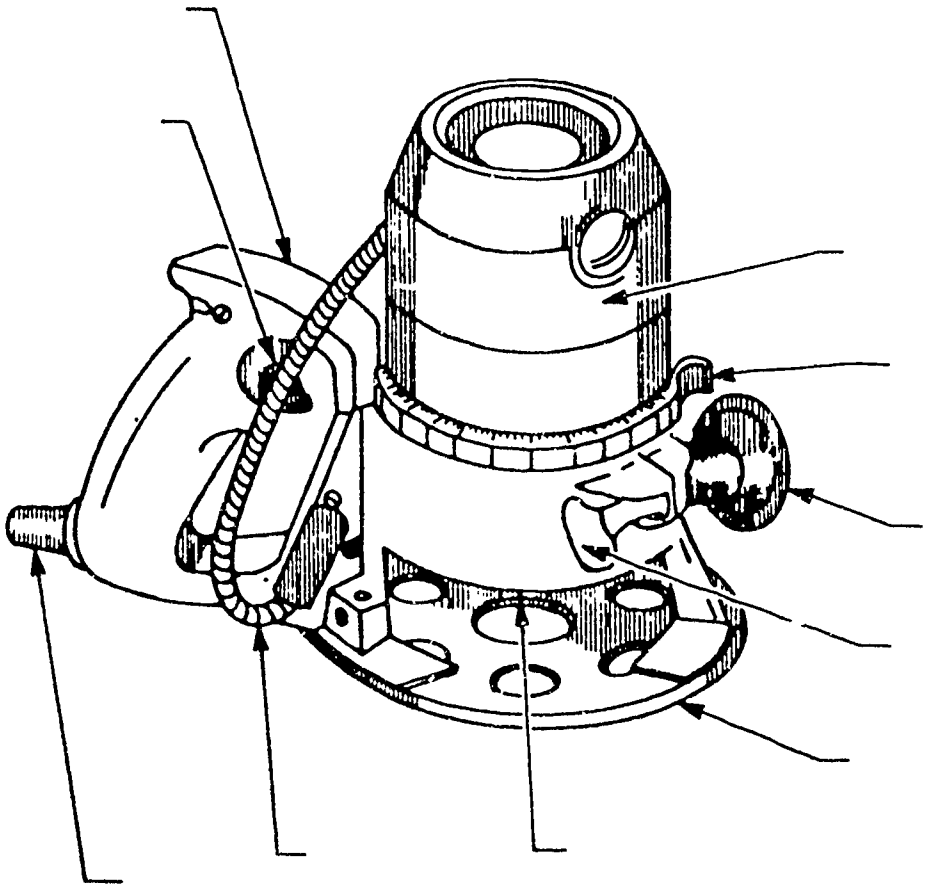

Sander

SAFETY INSTRUCTIONS

1 Obtain permission from your teacher before using sanding machine.

2 Hold work securely. Stock that is to be sanded with a portable sander should be clamped in a vise or to the bench.

3 Make adjustments only when sander is at a dead stop The portable sander electric cord should be disconnected.

4. Check belt or disk for breaks or tears.

5 Be sure that switch is in an off position and machine is on its side before plugging in electric cord on portable sander.

6. Wear face shield, safety glasses (goggles, spectacles), and dust mask.

7 Turn on power only after permission is given.

8 Keep fingers away from the abrasive surface on the sander

9 Sand on downward motion side of disk sander

10 Use special care in sanding small or irregular pieces. Check with your teacher.

11 Feed stock into the abrasive material at a moderate rate of speed and pressure to avoid burning stock and overloading motor.

12. Turn off power and rest portable sander on its side, near the middle of the bench, while changing position of board.

13 Turn off power after using sander and stand by until the machine has come to a dead stop

14 Disconnect electric cord of portable sander and return cleaned machine to designated place

15. Wait until the motor is completely stopped before placing portable sander on bench

16 Check alignment, tracking and tension of belt to insure against "run off" on portable and stationary belt sanders.

17 Keep the disk guard in place at all times on the disk sander

18 Make sure that the table edge of the disk sander is within 1/8 inch of the disk

19 Do not talk to others while operating any sanding machine

Sander

Instructions Do not mark in this test book. Read each question carefully and select the most correct answer. After you have selected the correct answer mark your selection on the answer sheet provided

SAFETY TEST QUESTIONS

( ) 1 You should make all adjustments on the portable sander. (a) while the electric cord is disconnected; (b) only when other students are at a safe distance, (c) with one hand, or (d) while it is in gear.

( ) 2. Before you plug in the electric cord of the portable sander, you should be certain. (a) machine is free of sawdust; (b) machine is resting on its abrasive surface; (c) sanding belt or disk has been removed; or (d) machine is resting on its side.

( ) 3. When operating a disk sander, you should hold your work against the disc (a) rim, (b) center, (c) upward motion side; or (d) downward motion side.

( ) 4. While sander is in motion, you should: (a) blow away the sawdust, (b) remove abrasive surface, (c) use extreme feed pressure; or (d) keep your fingers away from abrasive surface

( ) 5 You should feed stock into the abrasive material of the sander: (a) as fast as possible, (b) at a moderate rate of speed and pressure, (c) both upward and downward, or (d) both forward and backward.

( ) 6 Material to be sanded with a portable belt sander should be (a) clamped in a vise or to a bench, (b) held by hand; (c) clamped to sander; or (d) held by another student.

( ) 7. Alignment, tracking and tension of belt sanders should be checked to insure against (a) looseness; (b) run-up; (c) tightness; or (d) "run-off".

( ) 8. The distance between the edge of the disk sander table and the face of the disk should be (a) 1/2 inch; (b) 1/4 inch; (c) 1/8 inch; or (d) 3/4.

FILL - IN

Read each of the following statements and add the missing word. Write your response in the space provided on the answer sheet. Do not write in the test booklet.

1. Stock that is to be sanded with a portable sander should be clamped in a _____ or to a bench

2. Make sure that the switch is _____ and the sander is on its side before plugging it in.

3. Keep _____ away from the abrasive surface on the sander.

4. Sand on the _____ motion side of the disk sander.

5. Use moderate rate of feed and _____ to avoid burning the stock and overloading the motor

6. Do not talk to others while _____ the sanding machine.

IDENTIFY PARTS

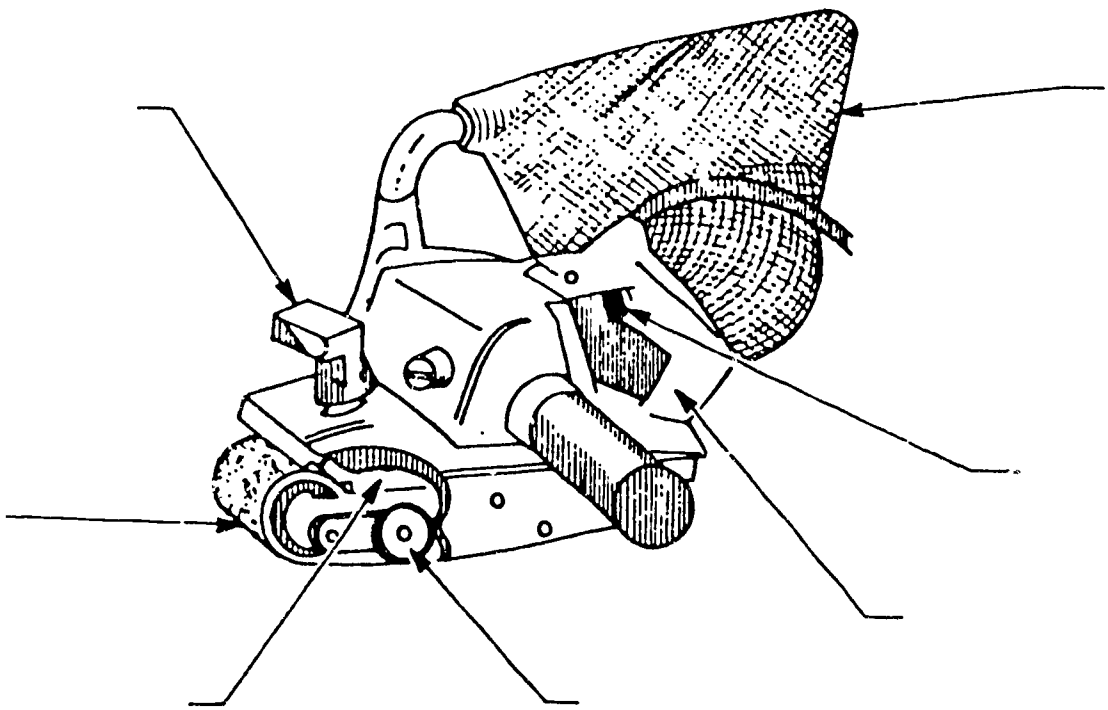

96

Scroll Saw

SAFETY INSTRUCTIONS

1. Obtain permission from your teacher before using the scroll saw.

2. Cut only stock with a flat surface on the bottom.

3. Make adjustments only when machine is at a dead stop.

4. Make sure the saw blade is the proper size for the job.

Material to be cut	Speed	Thickness to be cut: up to 1/16"	1/16 - 1/4"	1/8 - 1/2"	1/4 - 2"
		Number of teeth on blade per inch			
Hard wood	1000-1750	20	16	15	10
Soft wood	1750	20	18	15	8
Plywood	1300-1750	20	18	15	10
Plastics	650- 900	20	18	15	12
Steel	650	2	20	--	--
Aluminum	650- 900	20	20	15	--

5. Check blade for correct tension.

6. Adjust hold-down so it will be as close as possible to the work.

7 Turn machine by hand to make sure all parts are clear.

8. Make sure that no one but you is inside the operator's zone.

9 Select correct machine speed.

10 Wear face shield or safety glasses (goggles, spectacles .)

11. Turn on power only after permission is given.

12. Hold material firmly.

13 Feed the material into the machine at a moderate rate of speed. Do not force the work into the blade or attempt to turn too sharp.

14. Keep fingers away from, and out of the path of the saw blade.

15. Report mechanical defects or a broken blade to your teacher.

16. Turn off power after using scroll saw and stand by until the machine has come to a dead stop

17 Clear away scraps of wood on the table only after saw stops running.

18. Make sure that the blade is inserted into the chuck with the teeth pointed down towards the table. The scroll saw blade cuts on the down stroke of the saw.

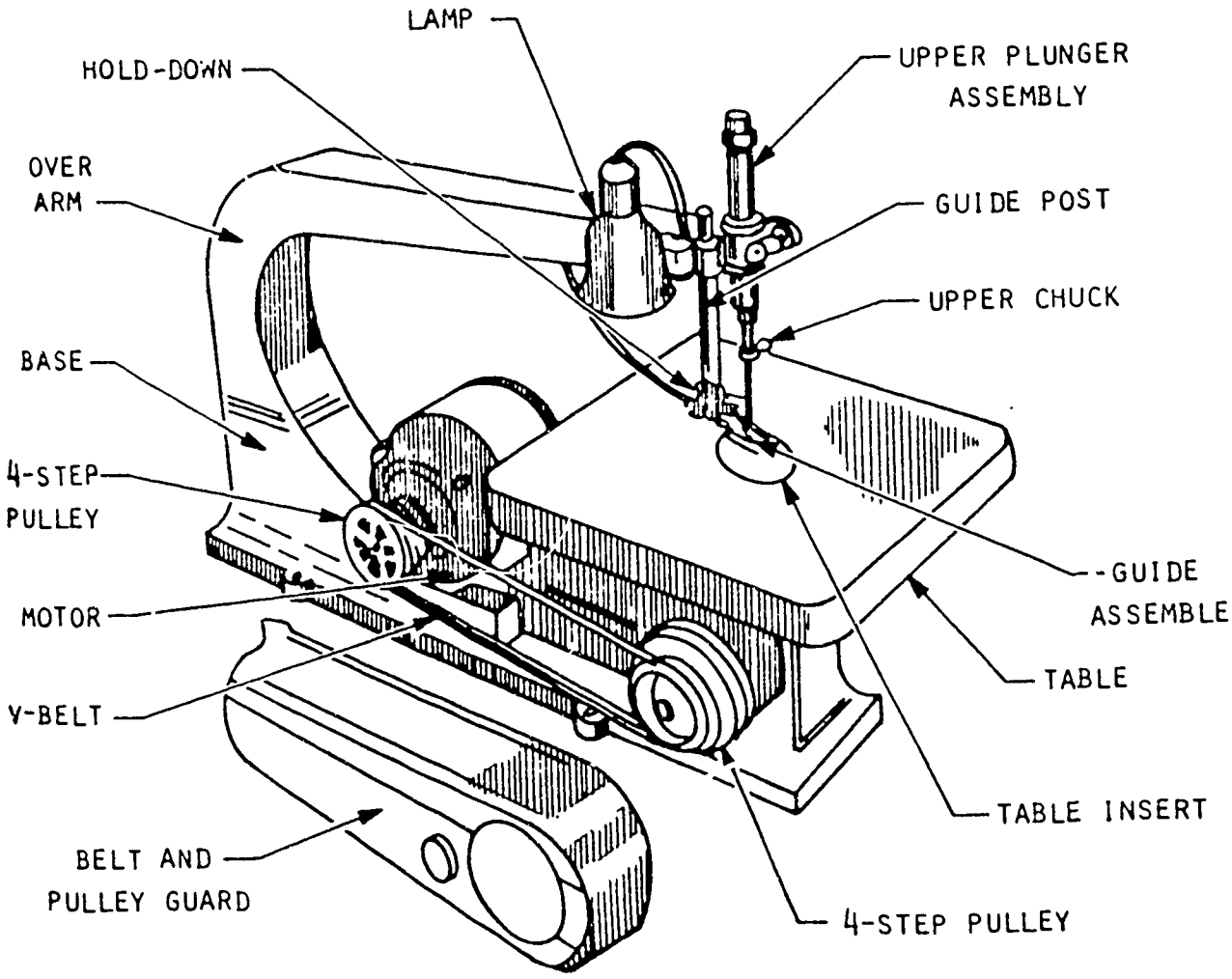

Scroll Saw

Instructions: Do not mark in this test book. Read each question carefully and select the most correct answer. After you have selected the correct answer mark your selection on the answer sheet provided

SAFETY TEST QUESTIONS

( ) 1. You should install the scroll saw blade to cut: (a) on the down stroke of the saw; (b) at minimum speed; (c) on the up stroke of the saw; or (d) on both the up and down stroke of the saw.

( ) 2. Before you start the scroll saw, you should check the hold-down adjustment to make certain (a) there is a half-inch clearance between it and the stock; (b) it is as close as possible to the work; (c) the correct size of blade is installed; or (d) it is against the table.

( ) 3 Prior to starting the scroll saw, you should turn machine by hand to make sure: (a) saw blade teeth point upward; (b) hold-down moves up and down; (c) the beginning cut is on line marked on the stock; or (d) all moving parts are clear.

( ) 4. Stock to be cut on the scroll saw should be: (a) soft; (b) hard; (c) flat on the bottom, or (d) round on the bottom.

( ) 5 You should feed stock into scroll saw: (a) in rhythm with motion of hold-down, (b) at a rate dependent on pulley speed; (c) as fast as possible; or (d) at a moderate rate of speed

( ) 6. Adjustments to the machine should be made when: (a) machine is completely stopped, (b) saw blade is on the up stroke; (c) all moving parts are clear; or (d) minimum speed is reached

( ) 7. When selecting the proper saw blade to cut thin stock, the number of teeth per inch of saw blade will: (a) be fewer than for thick stock; (b) be more than for thick stock; (c) be the same as for thick stock; or (d) be against the stroke of the saw.

( ) 8. Before starting the saw, it is very important that the saw blade installation be checked for (a) stroke; (b) softness; (c) speed; or (d) tension.

( ) 9. Material to be cut on the scroll saw must be held: (a) loosely; (b) firmly; (c) by another student; or (d) with a clamp.

FILL - IN

Read each of the following statements and add the missing word. Write your response in the space provided on the answer sheet. Do not write in the test booklet.

1. Adjust the hold-down so that it is as _____ as possible to the work
2. Turn the machine by _____ to make sure all parts clear.
3. Feed material into the machine at a _____ rate of speed.
4. Keep fingers away from the saw _____ and hands away from the path of the saw.
5. Make sure that the teeth of the saw blade are pointed _____ towards the table.
6. The scroll saw blade cuts on the _____ stroke.
7. Make sure that the blade is the correct_____ for the job.

IDENTIFY PARTS

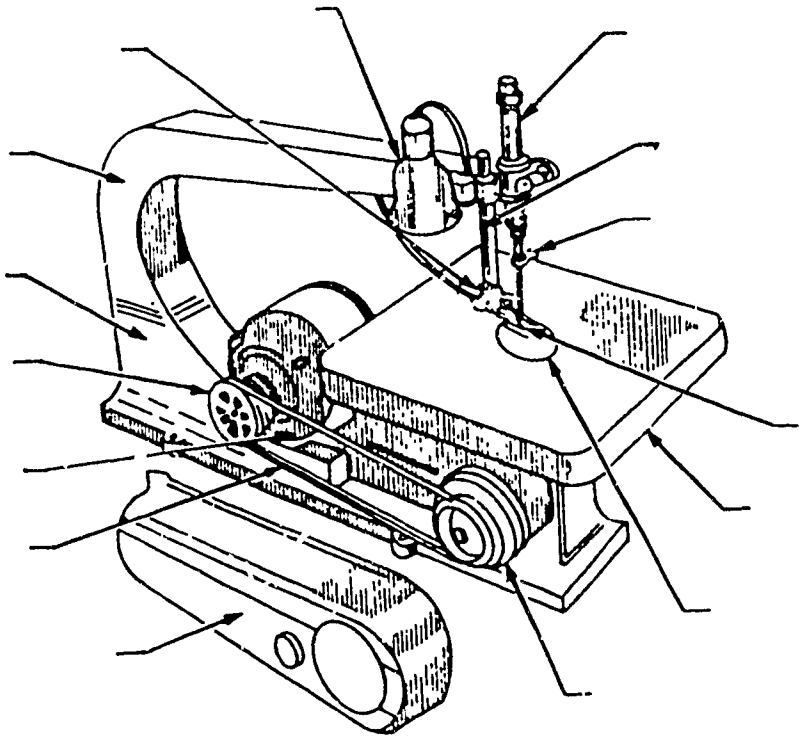

100

Shaper

SAFETY INSTRUCTIONS

1. Operate the shaper only in the presence of, and under the direction of the teacher.

2. Set up the machine so that the unused portion of the knife will be below the table This is possible when the machine is equipped with a reversing switch.

3 Make sure the knives are correctly seated before tightening the lock nut.

4. Where possible, mill the bottom of the stock, thus covering the knives completely

5. Use the fence whenever possible. Set the fence and make sure it is safely locked in place

6. Use all guards and hold down devices provided for the machine, removing them only when machine adjustment is necessary.

7. See that the spindle turns freely before turning on the power.

8. All wood that is to be run over the shaper should be examined for knots, wanes, splits, checks, wind and curly grain. Any of these defects can be a source of danger

9. Remove all wrenches or other tools, used in setting up, before turning on the power

10. Wear a face shield or safety glasses (goggles, spectacles .)

11. Make sure that no one but you is inside the operator's zone.

12. Keep hands well away from revolving cutters. Use a spring guard whenever possible.

13. Use push stick whenever possible.

14. Determine the direction of rotation by snapping the switch on and off, and watching the knives come to rest. The cutting edge should be leading and the bevel trailing. Be certain of this direction. The direction of feed must oppose the direction of rotation. Feed against the cutting edge. Think these two points out very clearly as an error here may have disastrous results

15. Hold the board being shaped down and against the guide with the palms of the hand, not the extended fingers. Fingers should be together and lying on the board out of the path of the cutter.

16. End grain of boards less than seven or eight inches in width should not be run over the shaper unless the shaper is provided with a sliding guide with a clamp for the board.

17 Where contour work is to be done, the set-up involves the use of the collar instead of the fence This means that the operator must drop in on the knives until the collar comes in contact with the work.

18 When dropping in, it is best to be in motion toward the direction of the feed While you are opposing the knives they are also opposing you, AND THE LEAST BACKING AT THE START may allow the knives to walk on uncut wood kicking the board from your hands

19 In collar work there must be some of the edge uncut for the collar to run on. If the molding cut will cover the entire edge, a pattern must be attached to the wood for the collar to run on

20 Where the collar is used do not start the cut on a corner. Doing so may cause the knife to walk around the corner to the uncut wood causing a bad kickback

21 Turn off power after using shaper and stand by until machine has come to a dead stop

22 Think each shaper operation out carefully. Try to determine the direction of possible kickback and place your hands so that they will be kicked away from the knife rather than pulled into it

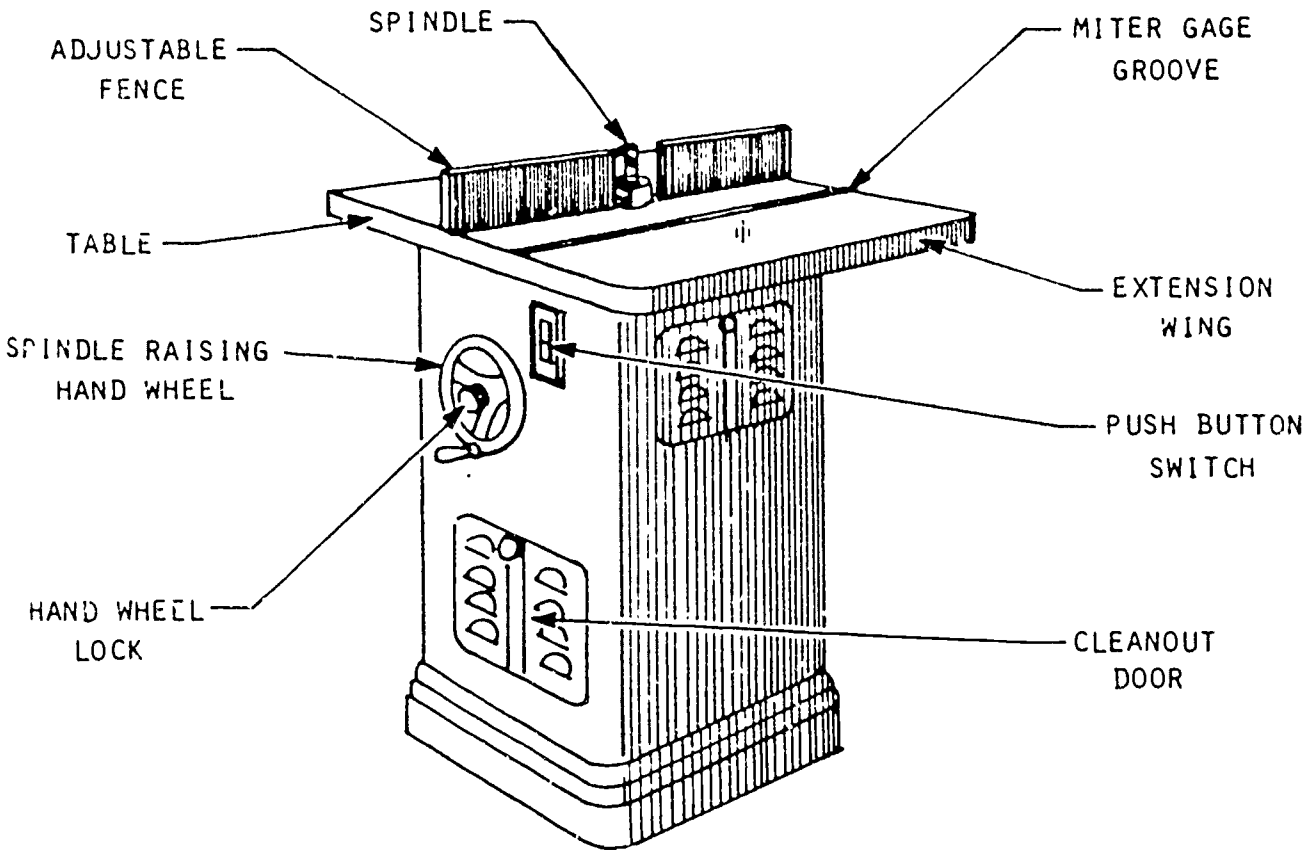

Shaper

Instructions. Do not mark in this test book. Read each question carefully and select the most correct answer. After you have selected the correct answer mark your selection on the answer sheet provided

SAFETY TEST QUESTIONS

( ) 1 In selecting stock for use on the shaper, you should make sure the stock is: (a) at least 2 inches by 4 inches by 18 inches; (b) correctly seated under lock nut; (c) grained; or (d) free from knots, cracks or other defects.

( ) 2. You should make sure that the shaper knives are. (a) correctly seated before tightening lock nut; (b) all of the tang type; (c) tightened with a fixed collar; or (d) flush with the table top

( ) 3. Prior to starting shaper, you should. (a) request the assistance of another student, especially on long stock; (b) check the hold down attachment for rigidity, (c) remove all loose articles from the shaper bed; or (d) loosen the lock nut,

( ) 4. In operating the shaper, it is best to: (a) enter all work in the direction the knives are rotating, (b) use fence or fixed collar whenever possible; (c) backup work especially in corners with small radii; or (d) enter all work above fixed collar level.

( ) 5. The only person who is allowed to give permission to operate or supervise instruction on the shaper is the: (a) teacher; (b) day man; (c) lab foreman; or (d) your bench partner.

( ) 6. The machine should be set up so that the unused portion of the blade is. (a) above the table (b) even with the table; (c) below the table; or (d) behind the fence.

( ) 7. After all adjustments are made, the spindle must: (a) engage the table; (b) turn with some resistance; (c) engage the collar; or (d) turn freely.

( ) 8. Every safety device available to the machine must be used, and the hands must never engage the: (a) collar; (b) cutter head; (c) fence; or (d) mitre head.

( ) 9. Contour work always calls for the set-up to include the (a) collar , (b) fence; (c) kickback, or (d) reverse rotation.

( ) 10. Where the collar is used, never start the cut: (a) in the middle, (b) on the bottom, (c) at the edge; or (d) on a corner.

FILL - IN

Read each of the following statements and add the missing word Write your response in the space provided on the answer sheet. Do not write in the test booklet.

1 Operate the shaper only in the presence of the _____ .

2. Be sure that the spindle _____ freely before turning the machine on.

3. Keep hands well away from the _____ .

4. Use a _____ stick whenever possible

5. Use the fence whenever _____ .

6. Wear a_____ shield or safety glasses (goggles, spectacles.)

7 Use all _____ and hold-down devices provided for the machine.

8 Whenever possible mill the _____ of the stock so that the knives are covered.

IDENTIFY PARTS

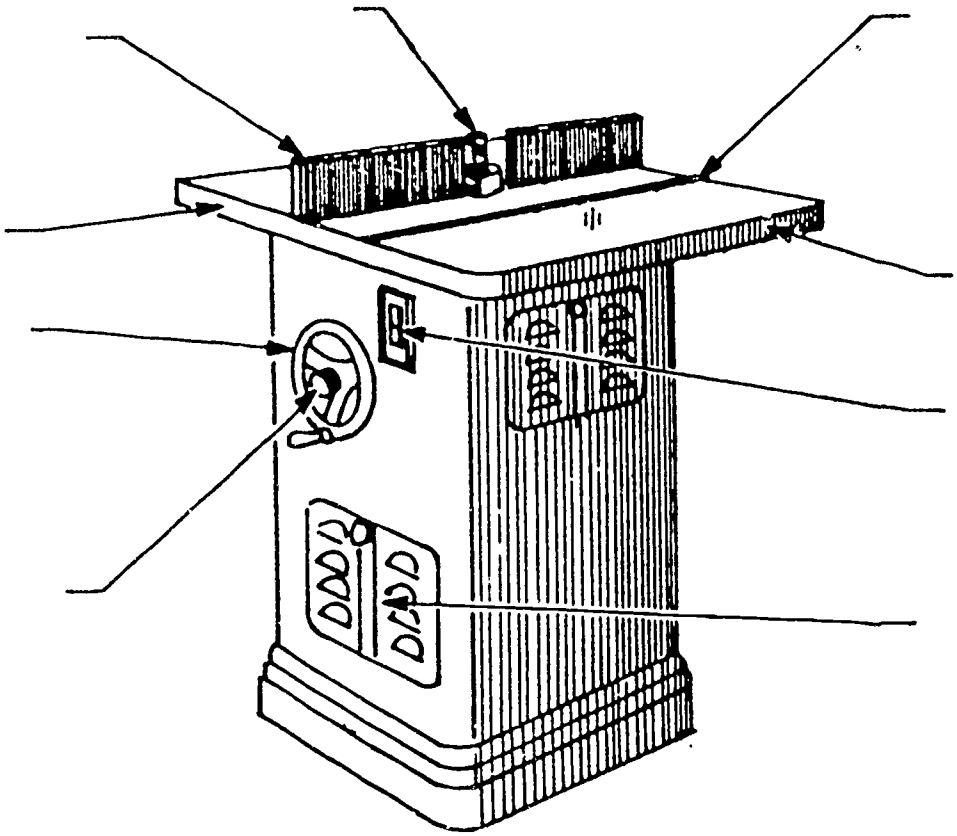

Portable Circular Saw

SAFETY INSTRUCTIONS

1. Wear safety shield and glasses.

2. Saw should not be operated without the teacher's permission

3 Select and install proper saw blade for ripping material or cutting across the grain Make sure that blade is sharp and free of cracks and other defects.

4 Check all adjustment locks to make sure they are tight.

5 Make sure all adjustments are proper and in alignment for the job to be performed

6 Before starting the saw make sure that the blade is not in contact with material to be cut

7. Saw should come to a dead stop before setting on the floor or bench Make sure that the guard has returned to position before setting saw down.

8. Saw only in a forward direction. Never attempt to saw in reverse.

9 Keep the arm that controls the saw in direct line with the blade. Place the other arm and body well out of danger.

10. The portable circular saw should never be used in awkward positions Never saw above the head, on a ladder or on sloping surfaces.

11. Make sure that the saw is grounded electrically.

12. Make certain that the guard is always clear to prevent cutting with the blade

13 Make sure the telescoping guard is free and works smoothly.

14. Never reach over or around the saw while it is running.

15 Make sure saw is running at full R.P.M. before advancing into material

16 Do not try to force saw to make turns.

17. Do not talk to anyone while operating the saw.

18. Make sure that supporting material, (bench, saw horse, etc) is clear of saw.

19. Always make pocket cuts by clearing the guard and tilting saw on the forward edge of the base and lower slowly into material.

20. When removing blades, lock the arbor with built-in arbor lock or block of wood Do not hold blade by hand and unplug the cord.

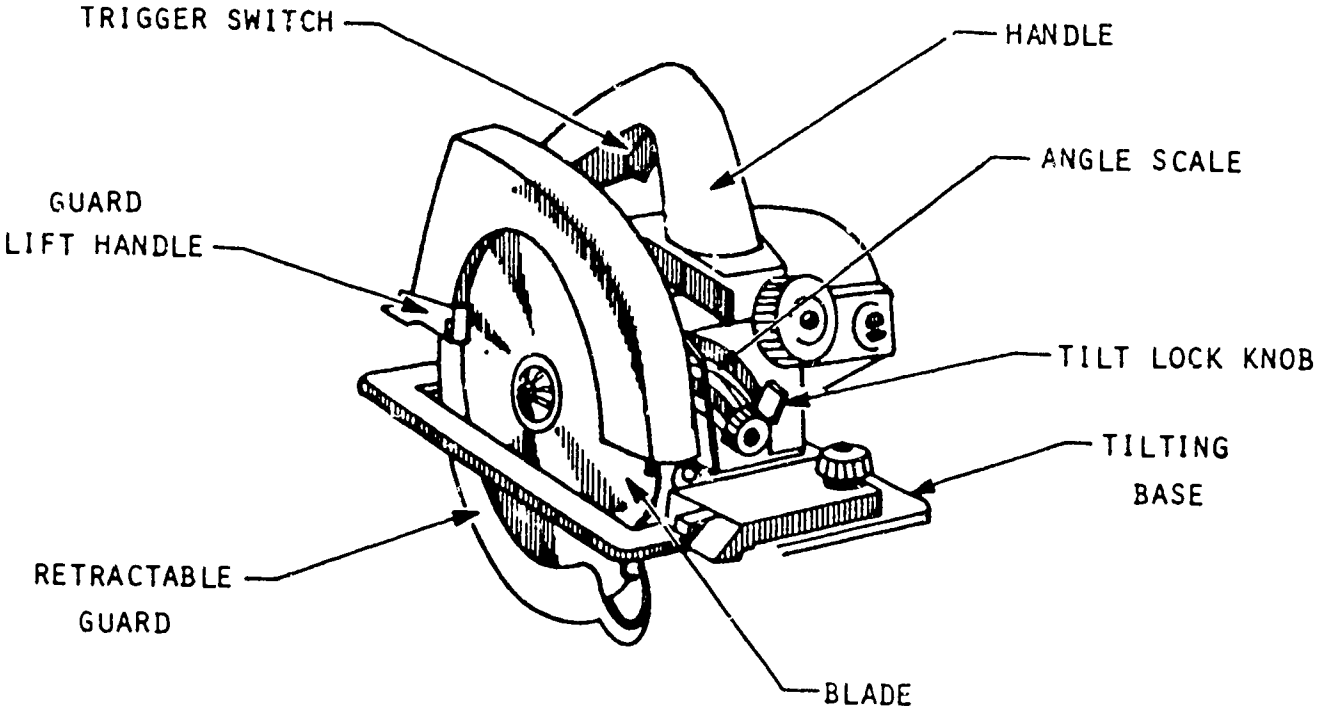
TRIGGER SWITCH
HANDLE
ANGLE SCALE
GUARD
LIFT HANDLE
TILT LOCK KNOB
TILTING
BASE
RETRACTABLE
GUARD
BLADE

Portable Circular Saw

Instructions. Do not mark in this test book. Read each question carefully and select the most correct answer. After you have selected the correct answer mark your selection on the answer sheet provided

SAFETY TEST QUESTIONS

( ) 1 Saw should always be allowed to come to a complete stop before setting it on the floor or a bench because: (a) the saw will vibrate too much; (b) if the guard sticks the blade could contact the surface and cause the saw to jump back, (c) the saw will overheat; or (d) none of these answers.

( ) 2. The portable circular saw should never be used in awkward positions because it (a) is hard to control; (b) may not cut accurately; (c) may kick back and injure the operator, or (d) all of these answers.

( ) 3. Make sure that the cord is clear of the blade and behind the direction of travel of the saw, because: (a) it might otherwise be cut, (b) it might make the saw cut crooked, (c) it might come unplugged; or (d) you might get shocked.

( ) 4 Before starting the saw make sure that it is not in contact with the material to be cut because (a) it might not be in the right place; (b) the cut may be crooked; (c) it makes it difficult for the saw to start and may damage it; or (d) it may ruin the blade.

( ) 5. Saw in a forward direction only to avoid: (a) splitting the wood, (b) making a crooked cut, (c) having the saw jump back; or (d) making a double cut.

( ) 6 Forcing the saw will cause: (a) the motor to overheat, (b) a rough cut, (c) the motor to slow down too much; or (d) all of these answers.

( ) 7 Sharp blades should always be used because. (a) they make cleaner, straight cuts, (b) the saw will not have to work so hard; (c) they are safer; or (d) all of these answers.

( ) 8 Make sure that the guard: (a) operates freely; (b) is posted, (c) has returned to position before setting down; or (d) a and c only are correct.

( ) 9 If the saw is not grounded electrically it (a) will not operate, (b) may give a severe shock to the operator; (c) will cut crooked; or (d) none of these answers.

FILL - IN

Read each of the following statements and add the missing word Write your response in the space provide on the answer sheet. Do not write in the test booklet

1 Always wear a face shield or safety _____ when using the portable circular saw

2 Use only _____ blades.

3. Keep the arm that controls the saw in line with the _____

4 Keep the hand that is not operating the saw away from the _____

5. Saw only in a _____ direction

6. Never try to saw in a _____ direction.

7. Check to see that the guard operates _____

IDENTIFY PARTS

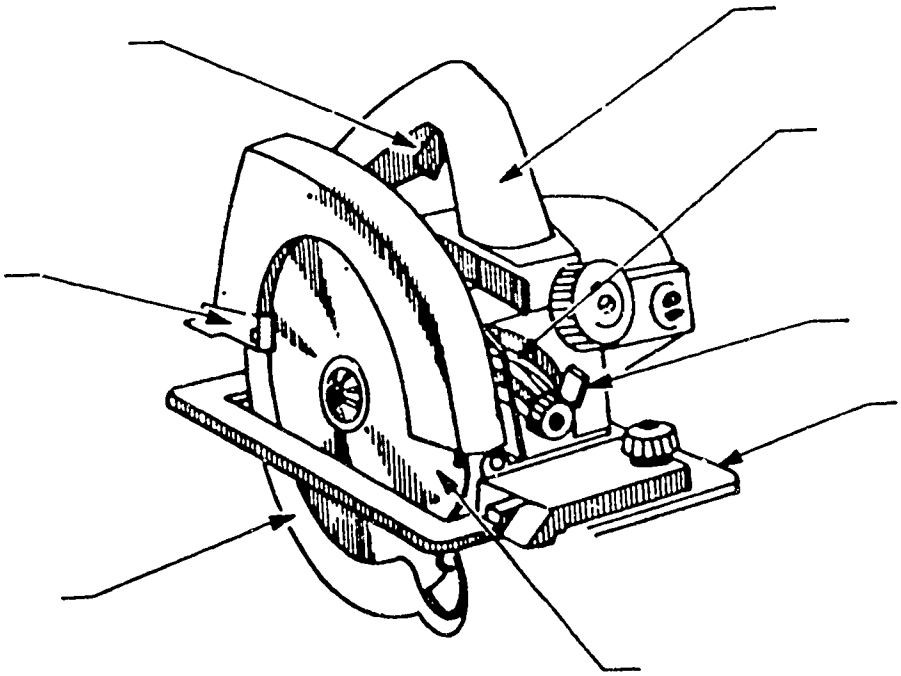

Automotive and Power Mechanics

This section contains specific safety instructions for operating certain equipment used in the area of automotive and power mechanics. Each set of safety instructions relating to the operation of a particular piece of equipment is followed by safety test questions. The general safety instructions, as well as instructions in other sections of this safety guide, may also apply to the areas of automotive and power mechanics.

Air Conditioning

SAFETY INSTRUCTIONS

1 Obtain permission from teacher before handling air conditioning test equipment or R-12

2. Wear safety goggles when handling R-12 because of its low evaporating temperature, which is 21.6 degrees below zero. If liquid R-12 gets in your eyes, serious injury may result.

3. When searching for leaks with a propane leak detector, do not breath the fumes given off by the detector. Make sure to provide adequate ventilation to carry the fumes away from you.

4. Do not allow a can of refrigerant to get warmer than 125 degrees Fahrenheit. Pressures will build up rapidly above this temperature, and there is danger in handling a container under extreme pressure.

5. Use a reasonable amount of care in tapping a can of refrigerant and in opening valves Not only is this a good safety practice, but it will also prevent a loss of refrigerant.

Air Conditioning

Instructions: Do not mark in this test book. Read each question carefully and select the most correct answer. After you have selected the correct answer mark your selection on the answer sheet provided

SAFETY TEST QUESTIONS

( ) 1. Before using air conditioning equipment you need permission from: (a) the custodian, (b) the principal; (c) the teacher; or (d) the tool room man.

( ) 2. Eye protection MUST be worn when using the air conditioning equipment. (a) at all times, (b) when charging only; (c) when evacuating only; or (d) only when the teacher is watching

( ) 3. When using cans of refrigerant be careful: (a) not to heat up the can; (b) to tap it properly, (c) to keep R-12 off your skin and eyes; or (d) all of the above.

FILL - IN

Read each of the following statements and add the missing word. Write your response in the space provided on the answer sheet. Do not write in the test booklet.

1. When working with the propane leak detector, be sure to provide good _____ to carry the fumes away from you.

2. Do not allow a can of refrigerant to get warmer than _____degrees Fahrenheit.

3. _____ _____ may occur if you allow the refrigerant to get on your face or hands

4. Do not breath the _____ _____ given off by the propane leak detector when checking for leaks.

Brake Shop

A brake shop is a machine that consists of a brake drum lathe and a brake shoe arcing machine The lathe is a device for cutting metal from the part of the drum that the brake shoes contact. The arcing machine is used to contour the brake shoes so that they will be the correct diameter in relation to the brake drum after it has been machined to a new diameter

SAFETY INSTRUCTIONS

1. Before you use the brake shop, you must obtain permission from your teacher.
2. Since iron chips are thrown in the cutting operation, you must wear goggles at all times while using the machine.
3. Never attempt to remove chips or cuttings from the brake drum lathe with your hands
4. Do not attempt to sharpen cutting bits Ask the teacher for assistance if a bit is not cutting properly
5. Always have the teacher inspect your set-up before turning ON the power switch
6. Use a brush for keeping chips off the ways of the lathe.
7. Make sure that the drum is tightened securely to the spindle before turning the power ON
8. Be certain that the brake shoes are securely fastened in the machine before attempting the re-arcing operation.
9. Make sure the dust collector bag is attached to the shoe arcing machine before turning the power ON.
10. Take light cuts when the brake drum is being turned.
11. Take light cuts when re-arcing the brake shoes.

Brake Shop

Instructions. Do not mark in this test book. Read each question carefully and select the most correct answer. After you have selected the correct answer mark your selection on the answer sheet provided

SAFETY TEST QUESTIONS

( ) 1. Before using the brake shop equipment, you must first get permission from the (a) foreman, (b) principal; (c) teacher; or (d) custodian.

( ) 2. Always have the teacher check your set-up before turning ON the: (a) machine light; (b) power; (c) feed setting; or (d) lab lights.

( ) 3. When operating the brake shop equipment, you must wear approved eye protection (a) at all times, (b) when making your set-up, (c) when removing the drum, or (d) when checking the cutting bit.

( ) 4. Chips must be removed from the machine with a. (a) brush, (b) file, (c) push broom, or (d) steel rule.

FILL - IN

Read each of the following statements and add the missing word Write your response in the space provided on the answer sheet. Do not write in the test booklet

1. Always ask your teacher to check your set-up before turning the power _____
2. Always use a _____ for keeping chips off the ways of the lathe, never your hands
3. The __ _____ collector bag must be in place when re-arcing brake shoes
4. Take light _____ when the brake drum is being turned or the shoes are being re-arced

Battery Charger

SAFETY INSTRUCTIONS

1 Obtain permission from your teacher before using the battery charger.

2. Always wear eye protection when using a charger.

3. Make sure to provide adequate ventilation when charging a battery.

4. Remove cell covers prior to charging a battery (unless the cell covers have other instructions on them).

5. Make sure that the charger switch is OFF before connecting the cables; always connect red to "positive" and black to "negative".

6. Turn timer switch to desired time.

7. Make sure amperage switch is at its lowest mark.

8. Turn the charger switch ON.

9. Turn amperage switch to the desired amperage but do not exceed the safe amount for the battery, usually 45 amps for 12 volts and 60 amps for 6 volts.

10. When charging a battery, do not ignite a spark or have an open flame nearby as the gas emanating from the battery is hydrogen, which is highly explosive.

11. Always turn the charger OFF before disconnecting the cables.

Battery Charger

Instructions: Do not mark in this test book. Read each question carefully and select the most correct answer. After you have selected the correct answer mark your selection on the answer sheet provided

SAFETY TEST QUESTIONS

( ) 1. When charging a battery: (a) provide ample ventilation; (b) remove cell covers (unless cell covers have other instructions on them.); (c) keep sparks and open flames away; or (d) all of the above.

( ) 2. The gas produced during battery charging is: (a) oxygen; (b) freon; (c) hydrogen; or (d) nitrogen.

( ) 3. Prior to operating the battery charger, you must obtain permission from: (a) teacher, (b) counselor; (c) principal; or (d) lab foreman.

FILL - IN

Read each of the following statements and add the missing word. Write your response in the space provided on the answer sheet. Do not write in the test booklet.

1. Make certain that the power switch is _____ before connecting or disconnecting the battery charger.

2. Be sure that the charger cables are connected to the proper battery terminal, red to _____ and black to _____.

3. Wear suitable eye _____ when using the battery charger.

4. Keep open _____ away from battery charging area, in order to prevent an explosion

Acids

SAFETY INSTRUCTIONS

1. When diluting acid, carefully and gently pour the acid into the water.
2. Do not inhale the fumes generated by the chemical solution.
3. Wash all equipment in clean water as soon as it is removed from the acid solution.
4. Wash (flush with water) immediately any part of your body or clothing that comes into contact with acid.
5. Wear safety goggles when working with acids.

Storage Batteries / Acids

Instructions. Do not mark in this test book. Read each question carefully and select the most correct answer After you have selected the correct answer mark your selection on the answer sheet provided

SAFETY TEST QUESTIONS

( ) 1. You should test a storage battery with a: (a) pair of pliers; (b) screwdriver; (c) hydrometer; or (d) piece of wire.

( ) 2. A good neutralizer for cleaning off the top of a storage battery is a solution of water and: (a) borax; (b) baking soda; (c) lye; or (d) lime.

( ) 3. It is best to charge storage batteries in a well-ventilated room because the gas given off during charging is: (a) explosive; (b) not dangerous; (c) non-explosive, or (d) carbon monoxide

( ) 4. Prior to disconnecting leads (wires) from charger to storage battery, you should: (a) replace cell covers; (b) check with tester; (c) close windows; or (d) turn off the charger.

FILL - IN

Read each of the following statements and add the missing word Write your response in the space provided on the answer sheet. Do not write in the test booklet

1. Always disconnect the _____ cable first when removing a battery from a vehicle
2. Extreme care should be used in handling batteries; they contain _____ _____ acid
3. Batteries should be lifted and carried with a battery_____
4. Connect the ground cable ___ _____ when installing a battery in a car.
5. Never lay metal objects or _____on top of a battery.
6. During charging the battery will be "gassing", and a _____ could cause an explosion

Car Lifts, Hoists and Cranes

SAFETY INSTRUCTIONS

1. Obtain permission from your teacher before using a car lift, hoist or crane.
2. Ask teacher to inspect blocking of car before it is raised.
3. Place crane or hoist directly over the object to be lifted.
4. Make sure that chain, cable or rope to be used in lifting is in good condition.
5. Double-check fastening of chain, cable or rope to the object to make sure it is secure before lifting with crane or hoist. Balance object before lifting.
6. Make sure all persons and obstructions are clear before raising or lowering an engine or car
7. Support car with stands or wooden blocks before doing work under the car or removing the wheels.
8. Obtain permission from your teacher before getting under a raised car.
9. Wear face shield or safety glasses (goggles, spectacles) when working under a car
10. Make sure safety dogs on hoist are free and ratchet is working properly.

Car Lifts, Hoists and Cranes

Instructions. Do not mark in this test book. Read each question carefully and select the most correct answer. After you have selected the correct answer mark your selection on the answer sheet provided

SAFETY TEST QUESTIONS

( ) 1. Before doing work under a car that has been raised for the removal of wheels, you should make sure that: (a) transmission is in neutral; (b) car is adequately supported, (c) car is raised enough for the use of a creeper; or (d) hand brake is applied.

( ) 2. When you are about to raise an engine or car by hoist or crane, you should be certain the (a) battery is disconnected, (b) transmission is in neutral, (c) hand brake is set, or (d) object to be lifted is securely tied and balanced.

( ) 3. You should place crane or hoist directly over the object to be lifted so (a) weight may be raised faster; (b) crane, hoist or object will not tip over; (c) there will be less wear on the chain, or (d) less room will be needed.

( ) 4. After you have raised the car by crane or hoist, you should place sufficient support under the car so you will be sure the: (a) car will not roll away; (b) strain will be eliminated on the springs and shock absorbers; (c) hoist will last longer; or (d) car will remain in the raised position

( ) 5 Before using any device to raise and engine or a car, make sure that (a) all persons and obstructions are clear; (b) springs and shock absorbers are connected, (c) battery is disconnected; or (d) gas tanks are drained.

( ) 6. The only person that may give permission for a student to work under a raised car is the (a) lab foreman; (b) teacher; (c) safety foreman; or (d) tool room foreman

( ) 7. When working under a raised car, the student must. (a) wear some form of eye safety protection, (b) apply the hand brake, (c) release strain on springs, or (d) always wear gloves

FILL - IN

Read each of the following statements and add the missing word Write your response in the space provided on the answer sheet Do not write in the test booklet.

1. Obtain permission from your _____ before getting under a car

2 Support a car with stands or _____ before doing work under the car

3 Wear a face shield or safety _____ while working.

4. Before raising a car on a hoist ask the _____ to check to see that it is properly blocked.

Engine and Tuneup

SAFETY INSTRUCTIONS

1. Obtain permission from your teacher before starting any engine, whether it is on a test stand or in a car.

2. Check fuel line for possible leaks.

3. Vent exhaust to the outside of the building and provide adequate ventilation whenever running an engine, whether it is on a test stand or in a car.

4. Keep your head, hands, hair, loose clothing and test leads away from revolving fan blades, pulleys and belts.

5. Be sure to block wheels of any mobile engine test stand you may use.

6. Use only a carbon dioxide extinguisher for flammable liquid fires.

7. Before starting an engine, the transmission must be in park (automatic) or neutral (standard) and the hand brake set to prevent forward movement and personal or property damage.

8. Do not puncture spark plug wires to hook-up test equipment. Damage will cause insulation leakage, shorts and a source for electrical shock.

9. Always use adapters to hook-up test electrical equipment to spark plug wires to avoid puncturing the wires. This will avoid damage to the insulation and prevent electrical leakage, electrical shock and shorts.

10. Touching hot manifolds, radiators or high tension wires can result in involuntary responses that may lead to another accident.

11 All sources of gasoline should be protected from open flame to prevent fire danger

12. Students should never place their heads directly over the carburetor air horn while the engine is running or being cranked. Backfires can cause face burns.

13. An automobile battery is capable of producing very high current Therefore, exercise reasonable care when working near the battery to avoid electrical connections through hands and tools

14. Never remove radiator cap while engine is hot. Hot coolant escaping under pressure can cause serious burns.

15 When working on high vehicles, use platform stands for good footing

16. The teacher should always be asked when you are in doubt about choice of proper test gear or hook-up.

17. All students in class should be constantly aware of any unsafe condition or equipment

Engine and Tuneup

Instructions. Do not mark in this test bo k. Read each question carefully and select the most correct answer After you have selected the correct answer mark your selection on the answer sheet provided

SAFETY TEST QUESTIONS

( ) 1. You should vent exhaust to the outside ilding and provide ventilation whenever running an engine because: (a) an engine neec to produce a proper mixture; (b) the noise of the exhaust will be reduced; (c) back pressu on the manifold will be reduced; or (d) it will prever t e release of exhaust gas in the lab.

( ) 2. When working on an engine that is running, you should. (a) remove blocks from the wheels, (b) keep the car in low gear, (c) make sure tank is full of gasoline; or (d) keep head and hands away from revolving fan.

( ) 3. It is best to use a carbon dioxide fire extinguisher because. (a) it will extinguish flammable liquid fires; (b) carbon dioxide can be mixed with the exhaust to reduce carbon monoxide; (c) carbon dioxide can be used to make the fuel richer; or (d) it can be used to cool muffler

( ) 4. It is the responsibility of students to know safety rules and procedures because· (a) the instructor will grade you higher; (b) it will reduce insurance premiums, (c) it could result in preventing serious bodily injury and property damage; or (d) the U.N has recommended these practices.

( ) 5. Before starting an engine, the transmission must be in park (automatic), or neutral (standard) and hand brake set, because if this is not done: (a) the transmission will overheat; (b) the engine will be under heavy strain, (c) the coolant will not circulate; or (d) the engine may start and the vehicle lunge forward causing injury or damage to persons or property.

( ) 6. You should never puncture spark plug wires in order to hook-up test equipment because (a) punctures cause permanent damage to insulation, (b) punctures are a source of electrical shock and shorts; (c) adapters are made for that purpose; or (d) a, b and c above

( ) 7. Do not touch hot manifolds, radiators or high tension wires because. (a) the shock may be lethal; (b) the involuntary response may cause an accident or injury; (c) it creates bad odors, or (d) it may crack the engine block.

( ) 8. Do not smoke or allow open flames around sources of gasoline because (a) there is a danger of fire; (b) fire extinguishers are costly to fill, (c) gasoline is a costly item, or (d) gasoline has a low flash point.

( ) 9. Never look directly into the carburetor air horn of a cranking or running engine because· (a) you will choke off the air supply, (b) the vent will not function, (c) it causes the PCV valve to stick, or (d) there is danger of backfire that can burn the face and hair.

( ) 10. When in doubt about proper test gear hook-up ask: (a) the custodian; (b) the teacher; (c) a visiting student; or (d) anyone that seems to know.

( ) 11 A safety conscious student is: (a) always alert and not distracted, (b) a non-participant in horseplay, (c) always looking for unsafe conditions and equipment, or (d) a,b and c above

FILL - IN

Read each of the following statements and add the missing word. Write your response in the space provided on the answer sheet. Do not write in the test booklet.

1. Always vent exhaust to the _____ of the building and provide adequate ventilation.

2 Keep head and hands from revolving blades, _____ and belts

3. Have a carbon dioxide type fire _____ available in case of fire

4. Be careful of hot _____ , radiators and other engine parts.

5 Never look directly _____ a carburetor air horn when trying to start an engine.

6. Always be checking, full time, for a possible _____ that could cause a fire.

7. Always obtain _____ from your teacher before starting an engine in the lab.

Flammable Liquids

SAFETY INSTRUCTIONS

1. Store flammable liquids in a fireproof room or cabinet.

2. Bring into the lab only sufficient flammable liquid for immediate use. Keep only in a safety container approved by the Underwriters' Laboratory. Label container with name of contents.

3. Gasoline vapor is highly combustible.

4. "Use only approved cleaning solutions. There is a danger of explosion when using gasoline as a cleaning agent.

5. Avoid contact of carbon-removing or paint-stripping compounds with your skin.

6. Place rags containing oil, gasoline, paints, solvents and other combustibles in designated (approved) metal containers to prevent spontaneous combustion.

7. Keep the top of oil drums and the surrounding area clean and free of combustible materials.

8. Dispose of unwanted flammable liquids and combustible materials daily.

Flammable Liquids

Instructions. Do not mark in this test book. Read each question carefully and select the most correct answer. After you have selected the correct answer mark your selection on the answer sheet provided

SAFETY TEST QUESTIONS

( ) 1. Gasoline should be kept in a safety container approved by the Underwriters' Laboratory because (a) the odor of gasoline makes some people ill; (b) gasoline vapor is highly combustible; (c) it will not evaporate; or (d) the container is difficult to tip over.

( ) 2. You should use approved cleaning solutions instead of gasoline because. (a) gasoline does not clean as well as solvent, (b) gasoline is too expensive to use for cleaning purposes; (c) parts will be tinted by the red dye in leaded gasoline, or (d) there is danger of an explosion when using gasoline.

( ) 3 Rags containing oil, gasoline, paints, solvents and other combustibles should be (a) folded neatly and placed on a shelf; (b) left on the workbench, (c) thrown on the floor; or (d) placed in an approved metal container.

( ) 4. Even though flammable liquids are in safety containers, the materials should still be stored (a) outside; (b) in the lab office; (c) under the bench; or (d) in a fireproof room or cabinet.

( ) 5. Carbon-removing and paint-stripping compounds. (a) are harmful to the skin, (b) will not harm the skin; (c) will not evaporate; or (d) will not pour easily.

( ) 6 Unwanted flammable liquids and combustible materials (a) can be kept indefinitely, (b) should be disposed of daily, (c) should be disposed of at the end of the week, or (d) should be disposed of at the end of nine weeks.

FILL - IN

Read each of the following statements and add the missing word Write your response in the space provided on the answer sheet. Do not write in the test booklet.

1 All flammable liquids should be stored in a _____ room or cabinet

2. Gasoline vapor is highly _____

3. Place oily rags in approved metal _____

4 Keep the top of oil drums and the surrounding area free of _____ materials.

5. Use only approved _____ solutions There is a danger of explosion when using gasoline as a cleaning agent.

6. Label all containers with the name of the _____ to avoid confusion

7. Store only small quantities of _____ liquids inside the shop. Be sure that they are stored in approved containers.

Hot Tank

Many different things can be used as the cleaning agent - - laundry detergent, trisodium phosphate, caustic soda (lye), or various commercial cleaners. Trisodium phosphate, lye and commercial cleaners are injurious to the skin and, for this reason, hot tank solutions must never come in contact with your skin or eyes - - even if the solution is cold. Heating the solution only makes it more dangerous.

SAFETY INSTRUCTIONS

1. Obtain permission from your teacher prior to using the hot tank, turning on the gas, adding cleaning agents, or turning on the air agitator.

2. Eye protection must be worn at all times when working with or around the hot tanks.

3. Items put into the tank must have a wire or chain attached to them so they can be retrieved from the solution. Small parts may be held in a sling.

4. Stand back as far as possible when lifting the lid off the hot tank, as the steam may burn you

5 Always use rubber gloves when putting items in or taking them out of the hot tank

6. Never put your hands in the powdered cleaning compounds used in the hot tank. Scoop the cleaning solutions out of the container with a scoop or small shovel.

7 Always turn the air agitator OFF before loading or un-loading parts from the hot tank.

Hot Tank

Instructions. Do not mark in this test book. Read each question carefully and select the most correct answer. After you have selected the correct answer mark your selection on the answer sheet provided

SAFETY TEST QUESTIONS

( ) 1. Before using the hot tank, you must have permission from the. (a) custodian, (b) teacher, (c) lab foreman; or (d) principal.

( ) 2 Eye protection must be worn when using the hot tank. (a) at all times; (b) when loading only, (c) when unloading only; or (d) only when the teacher is watching.

( ) 3. When removing heavy items from the hot tank, always use a (a) rope, (b) pry bar, (c) suitable lifting device; or (d) screwdriver.

( ) 4. The hot tank solution is injurious to: (a) your skin, (b) crank shafts, (c) all engine parts, or (d) cast iron.

( ) 5. Stand back as far as possible when lifting the lid on the. (a) hot tank, (b) solvent tank; (c) wash tank; or (d) trash can.

( ) 6. Powdered cleaning compounds must never come in contact with (a) your skin, (b) the bench, (c) engine parts; or (d) the floor.

( ) 7. Before loading or un-loading the hot tank, the air agitator valve must be (a) turned off, (b) turned on; (c) turned on halfway; or (d) turned on one quarter turn.

FILL - IN

Read each of the following statements and add the missing word Write your response in the space provided on the answer sheet. Do not write in the test booklet.

1. Never put your _____ into the hot tank, or cleaning compounds.

2. Always use _____ gloves when working with the hot tank.

3 Large items which are put into the hot tank must have a wire or a _____ attached to them.

4. Always turn the air agitator _____ before loading or un-loading the hot tank.

Hydraulic Press

SAFETY INSTRUCTIONS

1. Before using the hydraulic press, obtain permission from your teacher.

2. Safety goggles must be worn while working with the press.

3. Other students and observers are to stay outside the working area.

4. When pressing out bearings or bushings, make sure that the work is centered before applying pressure.

5. Apply light pressure and then re-check to see if the work is properly aligned and level.

6. DO NOT apply pressure if the work is sitting at an angle.

7. Call the teacher to check the set-up before increasing the pressure.

Small Parts Solvent Tank

SAFETY INSTRUCTIONS

1. Always obtain permission from your teacher prior to using the small parts solvent tank

2. Be sure to wear a safety face shield when cleaning parts in the tank.

3. When putting parts in the tank, DO NOT allow them to splash.

4. Keep open flame away from parts tank because solvent is flammable.

5. If solvent is spilled, clean it up immediately.

6. Keep solvent out of your eyes and mouth, and off your clothing.

7. If solvent splashes in your eyes, immediately flush them with cold water.

Small Parts Solvent Tank

Instructions. Do not mark in this test book. Read each question carefully and select the most correct answer After you have selected the correct answer mark your selection on the answer sheet provided

SAFETY TEST QUESTIONS

( ) 1 Spilled solvent is dangerous; always: (a) clean it up immediately, (b) pour water on it, (c) leave it until the end of the period; or (d) report it to the lab foreman.

( ) 2. When putting parts in the tank, DO NOT allow them to: (a) float, (b) sink; (c) splash; or (d) touch the bottom of the tank.

( ) 3. If solvent gets into your eyes: (a) wipe it out with your hand, (b) wipe it out with a rag, (c) flush with water; or (d) leave it alone.

FILL - IN

Read each of the following statements and add the missing word. Write your response in the space provided on the answer sheet. Do not write in the test booklet.

1. Keep open _____ away from parts tank because the solvent is flammable.
2. When washing parts, allow them to _____ before removing them from the tank
3. When placing parts in the tank to be cleaned, DO NOT allow them to _____ .
4. Keep solvent out of your _____ and mouth and off of your clothing.

Electronics and Construction Electricity

This section contains specific safety instructions for operating certain equipment used in the area of electronics and construction electricity. Each set of safety instructions relating to the operation of a particular piece of equipment is followed by safety test questions. The general safety instructions, as well as instructions in other sections of this safety guide, may also apply to the areas of electronics and construction electricity.

General Electrical Safety

The laboratory teacher must realize that any electrical circuit is a potential hazard, regardless of the amount of voltage or current present. The hazard or resulting accident can generally be traced to defective equipment, unsafe work practices and a lack of knowledge of the dangers of electricity.

1. Defective equipment. Types of equipment frequently involved in electrical accidents include motor-driven equipment, control devices, portable electric tools, switches and panels

   a. Improperly grounded equipment (ground wires missing, broken or improperly connected)

   b. Open conduits, switch boxes, damaged or worn connections and exposed live wires

   c. Insulation which is defective, inadequate, worn, frayed, wet, oily or deteriorated, creating short circuit possibilities and energizing equipment frames.

   d Defective switches, receptacles, extension cords and lamp sockets.

   e. Dirty motor windings, improperly adjusted brushes and worn commutators.

   f. Improperly connected power tools and defective insulation in portable tools

   g. Broken housings and loose or vibrating machine parts which might contact and energize tool or machine frames and expose live surfaces to operator.

2. Unsafe practices and work procedures can result in electrical accidents and fires Some of the common unsafe acts committed in the industrial arts education laboratory which should be avoided are:

   a. Using ungrounded equipment and portable tools (except double insulated tools) or removing ground connections.

   b. Using defective tools or equipment in need of repair.

   c. Using equipment which does not meet the approval of the Underwriters' Laboratory for the intended purpose.

   d. Cleaning electrical panels, switch boxes, motors and other electrical equipment with water or dangerous solvents.

   e. Overloading or overfusing circuits by using wrong size or type of fuse or circuit breaker

   f Failure to use explosion-proof fixtures, switches, motors or other spark-proof items in hazardous locations.

   g. Failing to positively lock out or otherwise de-energize and tag equipment or circuits to be worked on. (Relying on gloves, rubber mats, etc., for insulation while carrying out electrical installation or repair.)

   h. Installing or extending electrical facilities in a manner not meeting the requirements of the National Electrical Code.

   i. Closing switches or circuit breakers repetitively when there is a fault in the circuit

   j. Using light duty, ungrounded extension cords for industrial service.

k. Failing to maintain clear access to electrical panels (clearance of 30" is required by federal code)

l. Using extension cords in place of permanent wiring installations

m. Overloading motors, insulation, wires and/or electrical accessories

n. Disconnecting electrical cords by pulling on the cords rather than on the plugs

o Using metal ladders while working on electrical equipment.

p Failing to properly label switch panels and boxes.

3. Lack of knowledge. A number of electrical accidents happen in the industrial arts laboratory because students "just didn't know any better." Many students lack an understanding and respect of electricity, which can be remedied through adequate supervision and implementation of a safety educational program concerning electricity

CONSTRUCTION ELECTRICITY

Electricity is powerful. Under control, electricity safely performs an endless variety of work, but uncontrolled, it can be extremely destructive. Electricity can be controlled if the right kinds of wiring and equipment are installed in the proper manner. It can be dangerous if the wrong kinds of winng or equipment are used, or even if the right kinds are improperly installed.

Improper electrical installations can be uneconomical and inconvenient, but worst of all, unsafe installations can burn and kill.

Electricity, man's greatest benefactor in our industrial economy, like any form of energy, must be respected. With care and forethought, the use of proper safeguards, and adherence to common sense safe practices, students can safely perform work on electrical circuits or electrical apparatus

The safe practices contained here are provided to guide the student who is engaged in work on electrical circuits and equipment. They should be carefully read and followed.

When these practices are not clearly understood, the student should consult the teacher before progressing with any job.

HANDLING OF ELECTRICAL CIRCUITS

1. Consider all electrical circuits to be dangerous

2 Shut off the power when examining or making repairs or alterations on light and power circuits When this is impractical the approval of the teacher must be obtained and all precautions taken to prevent accidents

3 Exercise extreme care when locating trouble in lighting circuits Make sure that the power is shut off before beginning repairs or alterations

4. Treat dead circuits as though they were alive. Taking this precaution may prevent an accident as the circuit may be closed through the error of some other person

5. Make a complete check of the circuit before applying power for the first time

6. The teacher must inspect and approve any experiment or project, whether connected temporarily or permanently, before power is applied for the first time.

7. Use all known safeguards to prevent accidents to yourself and others

Circuits

SAFETY INSTRUCTIONS

1. Consider all wires and other conductors in a circuit live until proven dead by a safe method of testing.

2. Use test lamp or suitable meter for testing a circuit.

3. Turn on a switch only when you know what it operates.

4. Turn off power before replacing a fuse.

5. Locate and correct fault that caused circuit breaker to open or fuse to blow before turning on the power.

6. Be sure circuit is protected against overload by a fuse or circuit breaker of correct current-carrying capacity.

7. Make changes in the wiring of a circuit only when power is turned off.

8 Select and use wire of correct current-carrying capacity.

Circuits

Instructions: Do not mark in this test book. Read each question carefully and select the most correct answer After you have selected the correct answer mark your selection on the answer sheet provided

SAFETY TEST QUESTIONS

( ) 1. When replacing a fuse in a switchboard, always: (a) turn off power; (b) replace with a fuse of lower rating; (c) check the lights; or (d) check the voltmeter.

( ) 2 All electrical circuits must be protected from overload damage through the use of. (a) fuses or circuit breakers; (b) jumpers; (c) a penny; or (d) other metal objects.

( ) 3 When testing for live wires a suitable device to use would be a : (a) pencil; (b) wire; (c) test lamp; or (d) screwdriver.

( ) 4 All wires in a circuit must be considered to be: (a) dead, (b) live; (c) safe, or (d) harmless

( ) 5 Switches should be turned on when it has been established: (a) what the switch controls, (b) that all wires are connected to a terminal, (c) that fuses are dead; or (d) none of these answers.

Electrical Equipment

SAFETY INSTRUCTIONS

1. Disconnect portable, electrically powered equipment from power source before servicing or repairing the equipment.

2. Examine electric cord for possible defects and correct any defects found before using

3. Make certain frame or housing of portable, electrically powered equipment is properly grounded before operating.

4. Connect with power source and turn on your own equipment

Electrical Equipment

Instructions. Do not mark in this test book. Read each question carefully and select the most correct answer. After you have selected the correct answer mark your selection on the answer sheet provided

SAFETY TEST QUESTIONS

( ) 1. You should make certain that the frame or housing of portable, electrically operated equipment is: (a) painted green; (b) polished; (c) ungrounded; or (d) grounded.

( ) 2. Before servicing or repairing electrical equipment, be sure that: (a) electric cord has been disconnected from power source; (b) batteries are discharged; (c) fuse has been replaced, or (d) gas has been shut off.

140

Electronic Devices

SAFETY INSTRUCTIONS

1. Keep chassis of an AC-DC radio clear of ground wires and other grounded conductors
2. Avoid coming in contact with grounded objects when making adjustments on an AC-DC radio connected to a power source.
3. Be sure capacitor is discharged before touching its terminals or connections.
4. Disconnect electric cord from power before touching anything behind transmitter panel
5. Remove headphones while working on a transmitter or receiver.
6. Keep one hand behind your back or in your pocket when testing high voltage circuits.
7. Make certain chassis, cabinet and cable shields of a transmitter or receiver are grounded
8. Wear gloves and a face shield when handling a cathode-ray tube.

Electronic Devices

Instructions: Do not mark in this test book. Read each question carefully and select the most correct answer. After you have selected the correct answer mark your selection on the answer sheet provided

SAFETY TEST QUESTIONS

( ) 1. If you are working on a transmitter or receiver, the headphones should always be: (a) worn; (b) removed; (c) placed on the floor; or (d) hung around your neck.

( ) 2. Before touching anything behind transmitter panel, be sure: (a) electric cord is disconnected from power; (b) switch is off; (c) stand by switch is off; or (d) filaments are off.

( ) 3. When testing high voltage circuits, keep one hand behind your back or: (a) on the ground; (b) in your pocket; (c) on the switch; or (d) on your head.

( ) 4. Chassis, cabinet and cable shields of a transmitter or receiver must be: (a) taped; (b) tuned; (c) ungrounded; or (d) grounded.

Construction Electricity

SAFETY INSTRUCTIONS

1. Cut only one electrical wire at a time.
2. Open switches before removing or replacing fuses.
3. Use fuse pullers for removing and replacing fuses.
4. Leave hot soldering irons in proper rack for cooling.
5. Ground all hand-held electric power tools before use.
6. Remove all tools and equipment at the completion of each job or experiment and clean up your area.
7. Report any defective tool to teacher immediately
8. Exercise care in using hand tools to prevent injury.
9. Open and close switches completely.
10. Keep hands off all moving equipment such as motor shafts, belts and pulleys
11. Abide by the National Electrical Code regulations for all electrical work.
12. Electricity will never bite back if you never give it a chance.
13. Report all injuries to teacher The slightest injury may cause infection if neglected
14. Wear goggles for all jobs that create eye hazards.
15. Satisfy yourself that you are working under safe conditions The care exercised by others cannot always be relied on.
16. Consider every circuit to be alive. Respect all power sources and power circuits as potentially dangerous.
17. Never throw pieces of wire or other articles around the work area or lab They might strike someone and cause serious injury
18. In "stripping" insulated wire, always cut away from your body.
19. Never work on "hot" lines while in wet areas

Construction Electricity

Instructions: Do not mark in this test book. Read each question carefully and select the most correct answer After you have selected the correct answer mark your selection on the answer sheet provided.

SAFETY TEST QUESTIONS

( ) 1 You should cut only one electrical wire at a time because: (a) it is too difficult to cut two at a time, (b) if they are "Hot" they will seriously damage the pliers and may cause electrical shock; (c) it damages the insulation; or (d) of the polarity.

( ) 2 Use a fuse puller for removing and replacing fuses because. (a) the fuses are too difficult to remove without one; (b) it will help to avoid electrical shock; (c) it is the way professionals remove fuses; or (d) the electrical code requires it.

( ) 3 All hand held power tools should be grounded in order to: (a) keep them from flying out of your hand; (b) assist in holding them steady; (c) make them operate more efficiently; or (d) avoid electrical shock.

( ) 4 When working on an electrical circuit: (a) open the main switch before replacing fuses; (b) tag the switch to tell others that you are working on it; (c) never work on it while it is "Hot", or (d) all of the above.

( ) 5. In "stripping" insulated wire, always cut away from your body to: (a) avoid electrical shock, (b) make a cleaner cut; (c) avoid injuring yourself; or (d) be able to see what you are doing.

( ) 6 Clean up should be completed: (a) by the next trade, (b) by the teacher or foreman, (c) after sheet rocking; or (d) by the student

FILL - IN

Read each of the following statements and add the missing word. Write your response in the space provided on the answer sheet. Do not write in the test booklet.

1. Wear _____ for all jobs where eye hazards exist.
2. Keep your hands away from all moving _____ such as shafts, belts and pulleys.
3. Be sure that all hand-held _____ equipment is properly grounded.
4. Consider every _____ circuit to be "alive".
5. Respect all power sources and power circuits as potentially _____ .

Home Economics Safety

This section contains specific safety instructions for operating certain equipment used in the area of home economics. Each set of safety instructions relating to the operation of a particular piece of equipment is followed by safety test questions. The general safety instructions, as well as instructions in other sections of this safety guide, may also apply to the area of home economics safety.

Kitchen

SAFETY INSTRUCTIONS - FOOD PREPARATION

1. Use dry towels when handling hot skillets, pots or roasting pans. (wet cloth conducts heat more readily.)

2. Avoid splashing grease on top of range. Grease will ignite quickly, causing a dangerous fire Do not throw water on a grease or fat fire - smother it Use a foam fire extinguisher or a wet towel

3 Remove the lids of pots slowly, lifting the side away from you so the steam will not rush out too quickly causing burns on the hands or face.

4. Always give notice of "HOT STUFF" when moving a hot container from one place to another

5. Keep towels used for handling hot foods off of the range. Too often, the end of the towel is dangled into or drawn across the fire

6 Avoid over-filling hot food containers.

7. Never let the long handles of sauce pans or skillets extend into aisles. If they are brushed, hit or bumped the pot may fall off the range.

8. When any lifting is required, lift in such a fashion that the strain is absorbed in the legs and arms Never lift when unbalanced Always lift with the legs, not the back.

9 Get help in lifting or moving any heavy pots or containers If they are heavy, don't gamble - get help.

10. Place a lit match to gas jets before turning on the gas. Ventilate gas ovens for a few minutes before lighting by leaving the oven door hang open so any gas pockets that might be present can escape.

11 Know the locations of fire extinguishers.

12. When placing food in hot grease, always let the item slide away from you so the grease will not splash towards you and cause a serious burn.

13. Keep work station clean at all times

14. Focus your attention on the job at hand at all times.

15. Never have glass near any food, it may break or chip.

16. Never throw any objects in the kitchen Always pass them from hand to hand.

17. Treat injuries immediately If minor, see the nurse if one is available If serious, obtain the services of a doctor.

18. When opening an oven door, stand back for hot air to escape, then reach to remove item

19. Be sure that the exhaust fan is operating before cooking with fats/oils.

SAFETY INSTRUCTIONS - HAND EQUIPMENT

1. Use the right knife for the job.

2. Do not grab for falling knives. When a knife starts to fall, jump backward to get out of the way

3. Always carry a knife with the tip pointing downward and with the cutting edge turned away from your body.

4. Never talk with a knife in your hand. If you should start to gesture with the knife, serious consequences could develop.

5. When cutting with any knife, always cut away from your body. The same applies to potato peelers or any other implement with a cutting edge.

6. Never place a knife into dishwater and walk away. Wash each sharp knife individually and place on drain rack.

7 Use a cutting board at all times. Never cut on metal.

8. When cleaning or wiping a knife keep the sharp edge turned away from your body.

9. Always use a sharp knife - it is safer than a dull one. The chances of slipping are not so great, and less pressure has to be applied. Remember: we cut with a back and forth sawing motion not with downward force. No matter how dull a knife is, it will always cut through human flesh.

10. Use knives for the purpose for which they were designed - not for levers or wedges or for bottle or can openers.

11. Pick up knives by the handles ONLY!

12. Take a firm grip on a knife handle, and keep the handle free of grease or any other slippery substance.

13. When slicing round objects, such as an onion or carrot, cut a flat base so that the object will set firmly and will not shift when being cut.

14. Never force a meat saw - it may jump from the bone.

15. When using a cleaver, be sure that the item to be chopped is setting solidly.

16. When grating foods, never work the foods too close to the cutting surface.

Kitchen

Instructions. Do not mark in this test book. Read each question carefully and select the most correct answer After you have selected the correct answer mark your selection on the answer sheet provided

SAFETY TEST QUESTIONS

( ) 1. Remove the lids from boiling pots slowly to prevent. (a) cold air from rushing in, (b) burns from escaping steam; (c) sudden loss of pressure; or (d) heat loss.

( ) 2. Use dry towels when handling hot pans because wet towels: (a) may cause the pan to slip, (b) conduct heat more easily, (b) are messy to handles; (c) are hard to find.

( ) 3 When lifting heavy objects lift in a way so the strain is absorbed by: (a) abdominal muscles and arms; (b) back muscles and arms: (c) shoulders and arms; or (d) leg muscles and arms

( ) 4 When placing food in hot grease always. (a) let the item slide away from you to avoid burns, (b) drop quickly to avoid burns; (c) let the item slide toward you; or (d) none of these answers.

( ) 5 Always carry a knife with the tip pointing downward and with the cutting edge. (a) facing inward, (b) toward your body; (c) away from your body; or (d) all of these answers.

( ) 6 Always use a sharp knife because: (a) the chances of slipping are not so great; (b) less pressure needs to be applied in cutting; (c) it is safer than a dull knife; or (d) all of these answers.

( ) 7 Before cleaning or adjusting a machine be sure that the power is off and the machine is unplugged because: (a) this will prevent you from getting shocked; (b) the cord may get in the way; (c) this will prevent accidental starting; or (d) a and c are both correct.

( ) 8 Be sure to wipe up spills immediately because. (a) they look unsightly; (b) you may slip and fall; (c) they are unsanitary; or (d) they cause excessive wear to the floor.

( ) 9 When feeding meat or other items into a food grinder always use. (a) a wooden plunger (stomper); (b) a metal spatula or spoon; (c) your finger if you are wearing gloves; or (d) a wire food whip.

( ) 10 Avoid splashing grease on the surface of a range as it will. (a) ignite quickly, causing a fire, (b) look unsightly; (c) cause pans to slip off; or (d) will become rancid if left too long.

( ) 11 If you have a grease fire you can extinguish it by. (a) smothering it, (b) throwing baking soda on it; (c) using a foam extinguisher; or (d) all of these answers.

( ) 12 Never let the handles of pots and pans extend past the edge of the stove or counter because (a) they are apt to be knocked off; (b) you may injure yourself if you run into them; (c) they may get in your way; or (d) they are easier to grab.

FILL - IN

Read each of the following statements and add the missing word. Write your response in the space provided on the answer sheet. Do not write in the tesi booklet

1. Never turn the handles of the pot towards the _____ .
2. Keep your work area _____ at all times.
3. Use the _____ knife for the job.
4. Hold knives by the _____ only.
5. Never leave pots, pans or utensils on the floor, you may _____ over them and fall
6. Do not _____ for falling knives
7. When a knife starts to fall, jump _____ to get out of the way.
8. When cutting with a knife, always cut _____ from your body

Sewing Room

SAFETY INSTRUCTIONS

1 Never place pins, needles or other sharp objects in your mouth, you may accidentally swallow one, or a child may mimic you and swallow one.

2 Keep scissors, seam rippers and other sharp objects out of the reach of children. Put them away as soon as you are through using them.

3. Use care when feeding materials into the sewing machine, keeping your fingers well back from the needle to avoid a puncture wound.

4 Handle electrical appliances with care. If there are bare electrical wires that are exposed and easy to touch, have them repaired.

5. Do not leave an iron unattended while it is plugged in. Always unplug it and set it off of the ironing board The ironing board is usually a little unstable and can be knocked over fairly easily, with resulting injury or damage from the hot iron. Use an iron caddy to hold iron on ironing board if at all possible.

6 If you must lift such heavy items as the sewing machine, lift with your arms and legs. Never bend over and lift using your back muscles.

7 Accidents most frequently occur where there is clutter. Keep the sewing area clear of clutter and scrap materials.

8 Be sure machine is unplugged before removing pressure foot for cleaning and oiling of machine

9. Make sure that electric cords are positioned to prevent tripping over them.

10. Scissors should always be used with respect.

Sewing Room

FILL - IN

Read each of the following statements and add the missing word. Write your response in the space provided on the answer sheet. Do not write in the test booklet.

1. Be sure to never place pins, needles or other _____ objects in your mouth

2. A _____ _____ may result if your fingers are not kept far enough away from the needle.

3. If there are bare electrical wires that are _____ and easy to touch, have them replaced.

4. Do not leave an iron unattended while it is plugged in. The ironing board is usually a little _____ and could be _____ over fairly easily.

5. Use an iron _____ to hold the iron on the ironing board.

6. Lift with your _____ and _____ if lifting heavy items such as a sewing machine.

7. Keep the sewing area clear of _____ and _____ materials.

8. Electrical cords should be _____ properly to keep from tripping

9. Scissors should always be used with _____ .

10. Scissors and other _____ objects should be kept away from children and _____ _____ when not being used.

Home

Instructions. Do not mark in this test book. Read each question carefully and select the most correct answer. After you have selected the correct answer mark your selection on the answer sheet provided

SAFETY TEST QUESTIONS

( ) 1. Dangerous materials and medicines should be: (a) stored out of the reach of small children, (b) stored in "child-proof containers"; (c) properly stored when not in use; or (d) all of these answers.

( ) 2. Electrical appliances such as toasters and irons, which are left plugged in for long periods of time may: (a) use up too much electricity; (b) become over-heated and cause a fire; (c) become worn out from too much use; or (d) none of these answers.

( ) 3. Running electrical cords under the carpet: (a) hides the cord so it looks nice; (b) keeps someone from tripping over the cord; (c) may cause a fire and should never be done; or (d) all of these answers.

( ) 4. Flammable liquids should never be stored in glass bottles because: (a) bottles are easy to break creating a fire hazard; (b) the glass will allow the liquid to fade and lose its strength; (c) they may become confused with something to drink; or (d) both a & c are correct.

( ) 5. Handling electrical appliances with wet hands may: (a) cause the appliance to slip and fall; (b) damage the appliance; (c) cause a severe electrical shock; or (d) both a & c are correct.

( ) 6. Home fire extinguishers should be checked annually to be certain that: (a) they are working properly; (b) they contain adequate amounts of chemical substances; (c) a and b are correct, or (d) none of these answers.

( ) 7. Emergency fire plans should be made before a fire occurs because: (a) it will help to insure that everyone gets out of the building safely; (b) after the fire is to late; (c) it will help people behave calmly when a fire occurs; or (d) all of these answers.

( ) 8. Smoke detectors are important because: (a) they impress the neighbors; (b) they add to the looks of a house or a room; (c) they warn when there is smoke in room while you sleep; or (d) none of these answers.

( ) 9. Toys and other objects on the stairs may. (a) look unsightly; (b) become lost or misplaced, (c) cause someone to fall and injure themselves; or (d) indicate children live in the house

( ) 10. Pointed or sharp objects should be. (a) properly stored; (b) used carefully; (c) kept out of the reach of small children; or (d) all of these answers.

FILL - IN

Read each of the following statements and add the missing word. Write your response in the space provided on the answer sheet. Do not write in the test booklet.

1. Always _____ an iron and remove it from the ironing board when not in use.

2. Never unplug an appliance by _____ on the cord, use the plug itself.

3. Never plug too many appliances into one outlet, which may _____ a circuit and cause a fire.

4. Fire fighting equipment should be stored near where fire _____ exist.

5. Never place anything metal down inside an appliance while it is plugged in to avoid an electrical _____.

6. Sharp and pointed objects should be stored out of the reach of _____ .

Business Safety

This section contains specific safety instructions for operating certain equipment used in the area of business. Each set of safety instructions relating to the operation of a particular piece of equipment is followed by safety test questions The general safety instructions, as well as instructions in other sections of this safety guide, may also apply to the area of business safety.

Office

SAFETY INSTRUCTIONS

1. When carrying sharp objects such as pencils, carry them in such a way that you avoid striking yourself or someone else.

2. Never carry a sharp object in your pocket.

3. Avoid placing sharp objects in your mouth.

4. Loose staples and staples that have been removed from a document should be discarded immediately. If left lying around, they could be picked up with something else and cause injury

5. Be careful when lifting heavy objects, always lifting with the arms and legs, keeping the back straight. If the object is too heavy or awkward for you, always get someone to help.

6. Be careful when handling paper and opening envelopes with your fingers. The edge of a piece of paper can be as sharp as a razor blade and can inflict a painful cut.

7. When using a paper cutter be sure to keep your fingers well back from the cutting edge

8 In some offices there are hazardous substances used for duplicating equipment Be sure to read the manufacturers label and follow the directions in handling hazardous materials

9. When in doubt about the use of a piece of equipment or material ask the teacher for help Never use a machine or substance that has not been explained to you.

10. Electrical cords should be handled with care, and never placed where they can be stepped on or might trip someone. Always unplug a cord by pulling on the plug itself, never on the cord

FILL - IN

Read each of the following statements and add the missing word. Write your response in the space provided on the answer sheet. Do not write in the test booklet

1. Always unplug a cord by pulling on the _____ .

2. Keep your _____ well back from the cutting edge when using a paper cutter

3. Get _____ when an object is to heavy or awkward for you to lift.

4 Lift heavy objects with your _____ and _____ .

5 Sharp objects should never be carried in your _____ .

6. When using materials, be sure to read the _____ label and follow the directions

7. When in doubt about the use of a piece of equipment or material, ask your _____ for help

8 The edge of a piece of _____ _____ can be very sharp, and cause a painful cut

9. Dispose of loose and removed _____ immediately.

10 You should never use a _____ or _____ that has not been explained to you

Outdoor Safety

This section contains specific safety instructions for operating certain equipment used in the area of outdoor safety. Each set of safety instructions relating to the operation of a particular piece of equipment is followed by safety test questions. The general safety instructions, as well as instructions in other sections of this safety guide, may also apply to the area of outdoor safety.

Chain Saw

SAFETY INSTRUCTIONS

1. Always start your saw without help. Do not start a saw on your leg or knee

2. Refuel in a safe place Move the chain saw at least 10 feet from the fueling point before starting the engine.

3. Wear close-fitting and protective clothing including a safety hat, goggles, shoes, gloves and ear plugs or sound barriers.

4 Beware of kickback. Always hold saw firmly with both hands and watch carefully what you cut Kickback may be caused by:

   a. Striking limbs or other objects accidentally with the tip of the saw while the chain is moving.

   b Striking metal, cement or other hard material near the wood, or buried in the wood

   c Running the engine slowly at the start of, or during a cut.

   d. Using a dull or loose chain.

   e Cutting above shoulder height

   f Being inattentive in holding or guiding saw while cutting.

5. Do not touch or try to stop a moving chain with your hand

6 Never allow any other person or animal close to a running saw or where a tree is being cut down

7 Turn off your saw when moving between cuts Always shut off the engine before setting it down.

8. Be sure of your footing and pre-plan a safe exit from a falling tree or limbs

9. Use extreme caution when cutting small size brush and saplings because slender material may catch the saw chain and be whipped toward you, or pull you off balance.

10 When cutting a limb that is under tension be alert for springback so that you will not be struck when the tension in the wood fibers is released

11 Never operate a chain saw in a tree

Firearms

SAFETY INSTRUCTIONS

1. Treat every gun as if it were loaded.

2 Be certain of your target before you shoot.

3 Never point a gun at anything that you do not intend to shoot.

4 Never shoot at a flat hard surface or the water. The bullet may ricochet and hit someone or something accidentally

5. Unload the gun, open the action and be certain that the breech is clear before entering an automobile, the house or camp. Guns should be carried in cases when not in a shooting area

6. Never leave a gun unattended without first unloading it.

7 Store guns and ammunition in separate places out of the reach of children.

8 Always unload guns when you are not using them.

9. Guns and alcohol do not make a good combination. Do not drink while you are working on a gun or using one.

10. Never look down the barrel of a gun unless you have first opened the action and checked to see that it is not loaded.

11 Guns are not toys and should never be used to "clown around" or for "horseplay".

12 Always keep the safety on until you are ready to shoot.

13. Never climb a tree, go through a fence or jump a ditch with a loaded weapon in your hands

14. Keep you guns and ammunition in good condition. Be sure that the ba rel and action are free from obstructions.

15. Watch the muzzle! Never pull the gun towards you, muzzle first, under any circumstances

16. Carry your gun so that you can control the muzzle at all times.

Firearms

Instructions: Do not mark in this test book. Read each question carefully and select the most correct answer After you have selected the correct answer mark your selection on the answer sheet provided.

SAFETY TEST QUESTIONS

( ) 1 In handling guns they should be: (a) treated as though they are loaded; (b) unloaded when not in use; (c) stored out of reach of children; or (d) all of these answers.

( ) 2. Never point a gun: (a) up in the air; (b) away from your body; (c) at anything that you do not intend to shoot; or (d) none of these answers.

( ) 3. When cleaning or working on a gun you should: (a) be certain it is unloaded; (b) never look down the muzzle; (c) be sure it is well oiled; or (d) keep it in good condition.

( ) 4 Guns should be carried: (a) so that you can control the muzzle at all times; (b) with the muzzle pointed away from your body and other people; (c) in a gun case when not in a shooting area, or (d) all of these answers.

( ) 5. Never leave a gun unattended without: (a) cleaning and oiling it, (b) unloading it; (c) plugging the muzzle; or (d) none of these answers.

FILL - IN

Read each of the following statements and add the missing word. Write your response in the space provided on the answer sheet. Do not write in the test booklet.

1. Never point a gun at anything that you do no intend to _____.

2. Never shoot at a flat, hard surface or the water, because the bullet may ricochet and _____ someone or something.

3. Guns and _____ do not mix. Do not drink while you are working on or using a gun.

4. Never climb a tree, go through a fence or jump a ditch with a _____ weapon in your hands.

5 Never enter an automobile, the house or camp without _____ the gun, opening the action and making certain that the breech is clear.

Small Boat

SAFETY INSTRUCTIONS

1. Make sure that you have a Personal Flotation Device (life jacket) for every person in the boat

2. Make certain that the P.F.D. is the right size for each person.

3. Make certain that you have the following items in the boat before leaving the shore or dock

   a oars or paddles
   b. extra rope
   c anchor
   d. first aid kit
   e. bailing equipment
   f flashlight
   g. tool kit
   h. fire extinguisher
   i. survival kit (see page 146)

4. Do not allow children to play in boats that are tied up.

5. Make sure that the boat is properly secured to prevent it from drifting away.

6. Always get in and out of a boat carefully, one person at a time with the weight kept low and in the center of the boat.

7. When riding in a boat remain seated with arms and legs kept inside the boat

8. When fueling a boat make sure that there are no open flames or lighted cigarettes within 50 feet of the boat.

9 Be sure to wipe up all fuel spills after fueling the boat.

10 Load the boat with care, making sure that the boat is balanced front to back and from side to side

11. Do not overpower your boat. Be certain that the motor matches the boat size

12. When you go boating alone, be sure to tell someone where you are going and when you expect to return.

13 As with many other activities, alcohol, drugs and boats do not make a good combination Avoid use of alcohol and/or drugs while boating.

14. Keep a close eye on the weather. If a storm is coming, stay off of the water If you get caught in a storm, get off the water as quickly as possible.

15 Adults and older children should use good boating practices as an example to younger boaters

16. Take good care of your boat, motor and boating equipment. Your life may depend on it

17. Never run the outboard motor with the cowling removed. The motor will <u>not</u> run cooler and there is a danger of being injured by moving parts.

A BASIC SURVIVAL KIT

A basic survival kit can be put into a three pound coffee can and should include the following items.

1. Instant coffee, tea or Tang and instant soup. (Bouillon cubes are good for flavoring beach delicacies.)
2. Hard candy. (This is a good quick energy source.)
3. 6 X 8 foot sheet of plastic or a plastic tube tent.
4. 3 feet of heavy aluminum foil. (Other items may be wrapped in the foil.)
5. 4 large Zip-Lock plastic bags. (Water and food items may be carried in plastic bags.)
6. 25 feet of nylon cord.
7. 50 feet of synthetic twine.
8. 30 feet of fine gauge snare wire.
9. 3 X 6 foot piece of gillnet.
10. 30 feet of 15-20 Lb. fishing line.
11. Fish hooks. You can attract fish by attaching aluminum foil to a bare hook.
12. 6 large nails.
13. Matches, that have been waterproofed in some manner. Put them in an easy to open water proof container, dip them in wax, etc.
14. Fire starter.
15. Short candles.
16. Small flare kit.
17. Swiss Army or other pocket knife.
18. Space blanket.
19. Heavy duty wire saw or small folding saw. (A light wire saw may break and does not cut well.)
20. Any air spaces in the kit can be filled with loose rice.

The coffee can lid should be sealed with duct tape. This will make the container watertight, and the duct tape may be useful in shelter building, repairing clothing, etc.

Small Boat

Instructions. Do not mark in this test book. Read each question carefully and select the most correct answer. After you have selected the correct answer mark your selection on the answer sheet provided

SAFETY TEST QUESTIONS

( ) 1. When fueling a boat make sure that there are no open flames or lit cigarettes within; (a) 10 feet of the boat; (b) 25 feet of the boat; (c) 50 feet of the boat; or (d) 100 feet of the boat.

( ) 2. Each person in a boat must have. (a) an oar or paddle; (b) a flashlight; (c) bailing equipment, or (d) a P.F D. (Personal Flotation Device .)

( ) 3. When boarding (entering) a boat you should. (a) do so carefully, (b) do so one person at a time; (c) keep the weight low and in the center of the boat; or (d) all of these answers.

( ) 4. When you are boating you should: (a) avoid the water; (b) avoid the use of alcohol; (c) remain standing; or (d) always be secured to the dock.

( ) 5. An outboard motor should not be operated without the cowling because: (a) It will not run cooler; (b) you may be injured by moving parts, (c) both a and b are correct; or (d) neither a or b are correct.

FILL - IN

Read each of the following statements and add the missing word. Write your response in the space provided on the answer sheet. Do not write in the test booklet.

1. When boating alone, always tell someone _____ you are going and when you expect to be back.

2. Be certain that you have the right _____ for your boat. Never overpower your boat

3. Make certain that each person in the boat has the right sized _____ .

4. Do not allow _____ to play in boats that are tied up.

5. When riding in a boat remain _____ with arms and legs kept inside the boat

Graphic Communications

This section contains specific safety instructions for operating certain equipment used in the area of graphic communications. Each set of safety instructions relating to the operation of a particular piece of equipment is followed by safety test questions The general safety instructions, as well as instructions in other sections of this safety guide, may also apply to the area of graphics communications.

Graphic Arts

Graphic arts injuries commonly occur from improper lifting practices, chemical and heat burns and tripping and falling. Student injury in the laboratory can be reduced by reviewing the following rules with the class members:

SAFETY INSTRUCTIONS - GENERAL

1. When working with a job case, remove it completely from the storage area and place it on a table top.
2. Return all tools, equipment and type to their respective places.
3. Never operate machinery if unsure of the correct procedure.
4. Exercise care when using developing chemicals.
5. Use proper eye protective devices when working with chemicals.
6. Pick up any type that may have fallen on the floor.

SAFETY INSTRUCTIONS - DARK ROOM

1. Always turn on the ventilator fan when in the darkroom.
2. Chemicals should not be stored in glass bottles on high shelves because they may fall and cause injury
3. Goggles and apron should be worn when preparing chemical solutions Always add acid to water - never water to acid.
4. Tongs or rubber gloves should be used in handling film in the developing process.
5. Students with skin allergies must wear rubber gloves while handling film or mixing chemicals
6. Keep your hands away from your face when working in the darkroom.
7. Wash hands carefully after developing film.
8. Portable electrical devices should not be used around or within reaching distance of sinks
9. No unsafe conduct will be tolerated in the darkroom.
10. All spills should be wiped up immediately.

SAFETY INSTRUCTIONS - EQUIPMENT

Air Brush

1. Have teacher connect and disconnect regulators to high pressure air line
2. Do not adjust regulators
3. Take care not to spray toward other students' faces
4. Student should always wear a mask to avoid inhaling toxic particles from inks and paints

Dry Mount

1. Use caution to avoid being burned by the press or tacking iron.
2. Dry mount with heat setting prescribed by the instructor.
3. Turn off and unplug press and tacking iron at the end of the process
4. Do not lay hot tacking iron down on papers or on the countertop, but return it to holder.
5. Inform teacher about worn electrical cords and plugs.
6. Never test heat of press or tacking iron by touching either one.

Engraving

1. Eye protection must be worn when engraving.
2. Keep hands from under cutter bit.
3. The teacher will change or adjust engraving cutters.

Folding Machine

1. Never attempt to remove a misfed or jammed sheet while the machine is running.
2. Turn off the power when making changes.
3. Keep all tools off of the tables of the folder.

Paper Drill

1. Be aware that the drill bit may be hot.
2. Keep hands away from drill area while drilling.
3. Keep area around operating pedal clear at all times.

Platemaker

1. Disconnect the platemaker before changing carbons or making adjustments. Be careful of hot carbons when changing them.
2. Never look at arc lights during operations.
3. Be careful not to break glass of vacuum frame.

Process Camera

1. Do not touch hot lights.
2. Avoid flashing lights in students eyes.
3. Caution should be exercised around glass copy board.

Rubber Stamp and Gold Stamping

1. Exercise caution when using heating element.
2. Keep work surface clean at all times.
3. Do not throw or drop type.
4. Never test heat by touching.
5. Turn off and unplug press at the end of the process

Sign Press

1. Do not throw or toss type.
2. Utilize caution to keep hands out of roller.
3. Use only specified cleaning solutions in cleaning type and press.
4. Do not lift or carry press during cleanup.

Stripping Tables

1. All foreign material should be kept off the glass so it will not be broken.
2. Keep fingers out of cutting area when cutting a flat.
3. The cutting devices should be kept sharp and stored properly

Thermography

1. Dark goggles must be worn in this area when heating the relief powder.
2. Students in the area are not to stare at the heat lamp when it is on.
3. Do not leave area when the lamp is on and relief powder is heating. (Fire may occur if lamp is unattended.

Graphic Arts

Instructions. Do not mark in this test book. Read each question carefully and select the most correct answer. After you have selected the correct answer mark your selection on the answer sheet provided

SAFETY TEST QUESTIONS

( ) 1. Graphic arts injuries commonly occur from. (a) improper lifting practices, (b) tripping or falling, (c) chemical and heat burns, or (d) all of these answers.

( ) 2. Operate machinery. (a) when you are unsure of the correct procedure, (b) before you have passed the safety exam, (c) when you are sure of the correct procedure, or (d) when the teacher is out of the room.

( ) 3 When working with chemicals. (a) store them in glass bottles on high shelves; (b) use proper eye protection devices, (c) mix all chemicals together, or (d) pour ui used chemicals down the sink.

( ) 4. When working in the dark room (a) leave the ventilator fan off; (b) don't worry about spilled chemicals; (c) add water to acid, or (d) wash hands carefully after developing film.

( ) 5. Student injury in the laboratory can be reduced by (a) unsafe conduct in the lab; (b) ignoring teacher instructions, (c) reviewing safety rules with class members; or (d) none of these answers.

FILL - IN

Read each of the following statements and add the missing word Write your response in the space provided on the answer sheet. Do not write in the test booklet

1. Dark _____ must be worn in the area, when heating the relief powder.
2. Exercise care when using developing _____ .
3. _____ and an apron should be worn when preparing chemical solutions.
4. Portable _____ devices should not be used around or within reaching distance of sinks.
5. Inform teacher about worn _____ cords and plugs
6. _____ devices should be kept sharp and stored properly.
7. Use only specified _____ solutions in cleaning type and press.

Technology

This section contains specific safety instructions for operating certain equipment used in the area of technology. Each set of safety instructions relating to the operation of a particular piece of equipment is followed by safety test questions. The general safety instructions, as well as instructions in other sections of this safety guide, may also apply to the area of technology.

Lasers

SAFETY INSTRUCTIONS

1. Obtain permission and instruction from the teacher before using the LASER
2. High voltage and line cord cables should be checked and working properly.
3. Others in the area must be warned prior to operation of the LASER.
4. Be sure LASER beam is not directed toward a reflective surface.
5. Do not look into primary beam.
6. Do not use binoculars or telescopes to view the primary beam.
7. Do not operate LASERs over CLASS 2 rating.
8. Follow manufacturer's recommended procedures and safety rules.

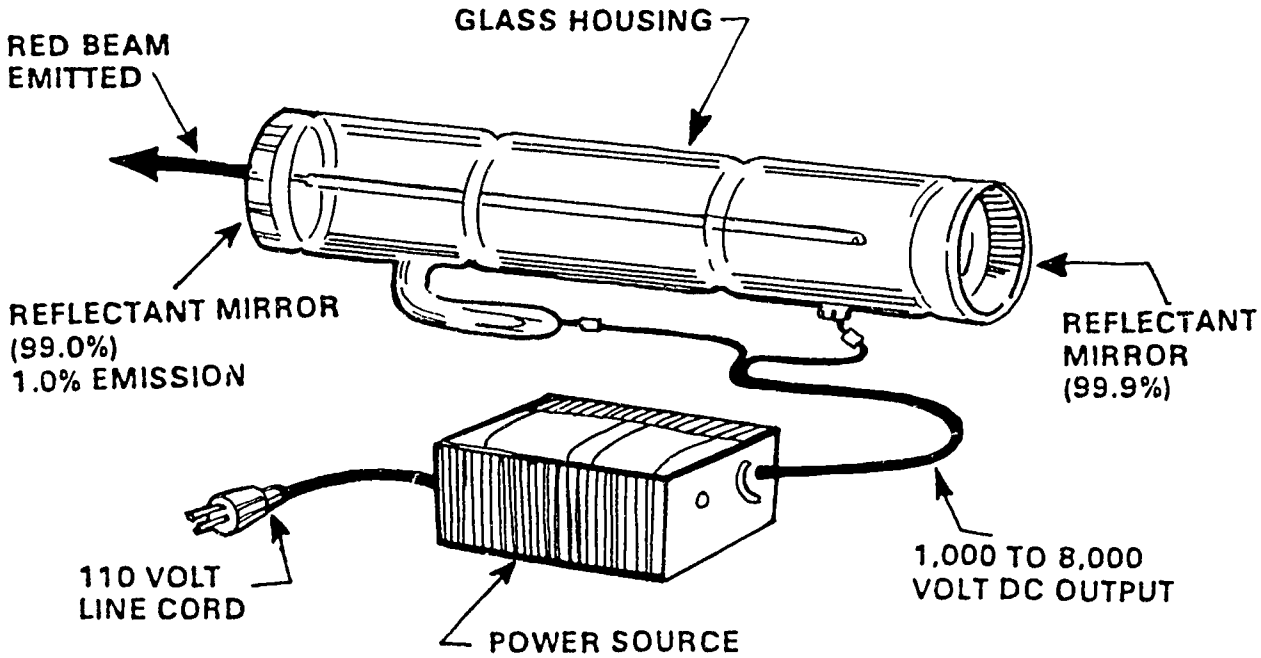

Laser

Instructions. Do not mark in this test book. Read each question carefully and select the most correct answer. After you have selected the correct answer mark your selection on the answer sheet provided

SAFETY TEST QUESTIONS

( )	1.	All safety procedures related to electrical safety need to be followed.	T	F
( )	2.	Do not stare at the LASER beam.	T	F
( )	3.	Do not use binoculars or telescopes to look at the LASER beam.	T	F
( )	4.	Other in the area must be warned before LASER operation.	T	F
( )	5.	Never point the LASER beam at a reflective surface.	T	F

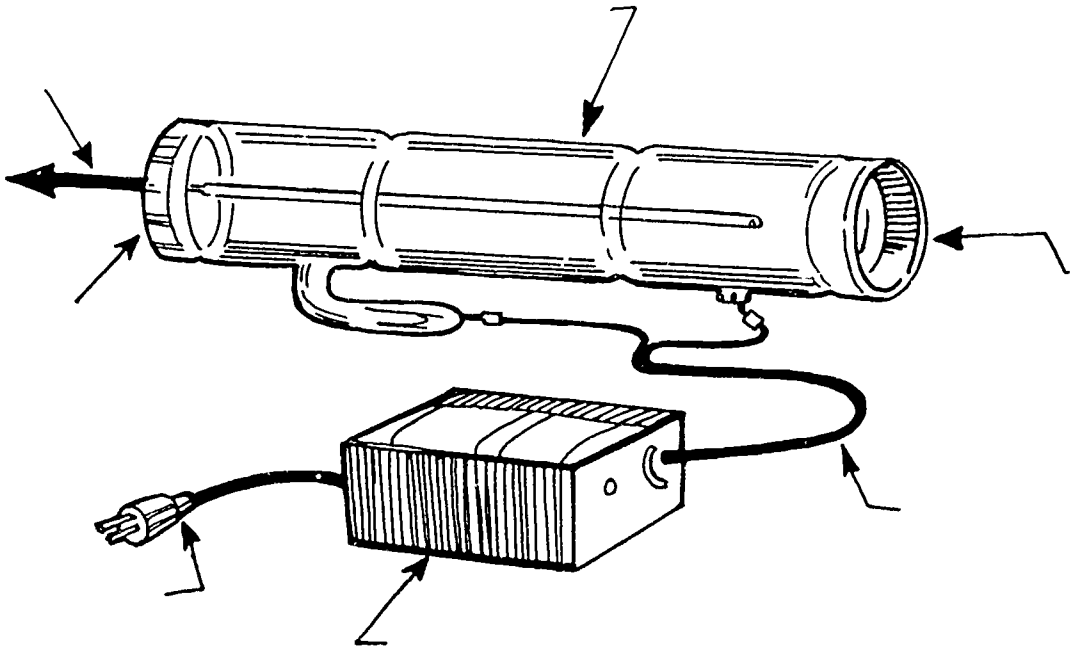

Robots

SAFETY INSTRUCTIONS

1. Obtain permission and instruction from teacher before using any robot.
2. Remove jewelry, eliminate loose clothing and confine long hair.
3. Make sure all guards are in place and operating correctly.
4. Always use proper eye protection
5. When in the teach mode, use slow movements to jog the arm from point to point.
6. Be sure the emergency stop button is functioning properly by testing it early in the teach cycle
7. Care should be taken that the operators fingers and other body parts are kept out of the work envelope
8. The operator must understand the program of robot actions and motions prior to use of the robot

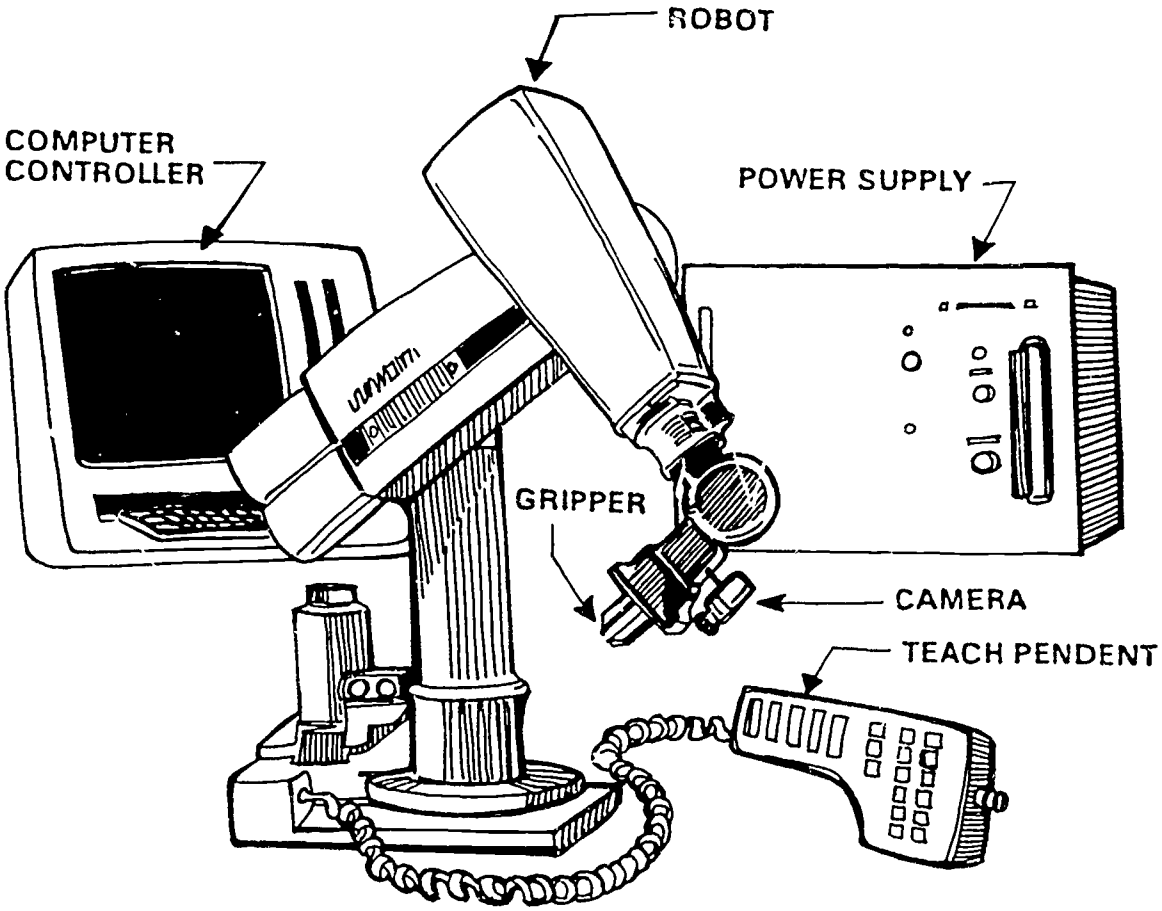

Robots

Instructions: Do not mark in this test book. Read each question carefully and select the most correct answer. After you have selected the correct answer mark your selection on the answer sheet provided

SAFETY TEST QUESTIONS

( ) 1.	Move the robot arm slowly from point to point when in the teach mode.	T	F
( ) 2	The operator does not need to understand the program of robot actions and motions prior to robot use.	T	F
( ) 3.	Eye protection is required when operating robots in the industrial arts/technology lab.	T	F
( ) 4.	The operator must stay clear of the work envelope when the robot is executing the program.	T	F

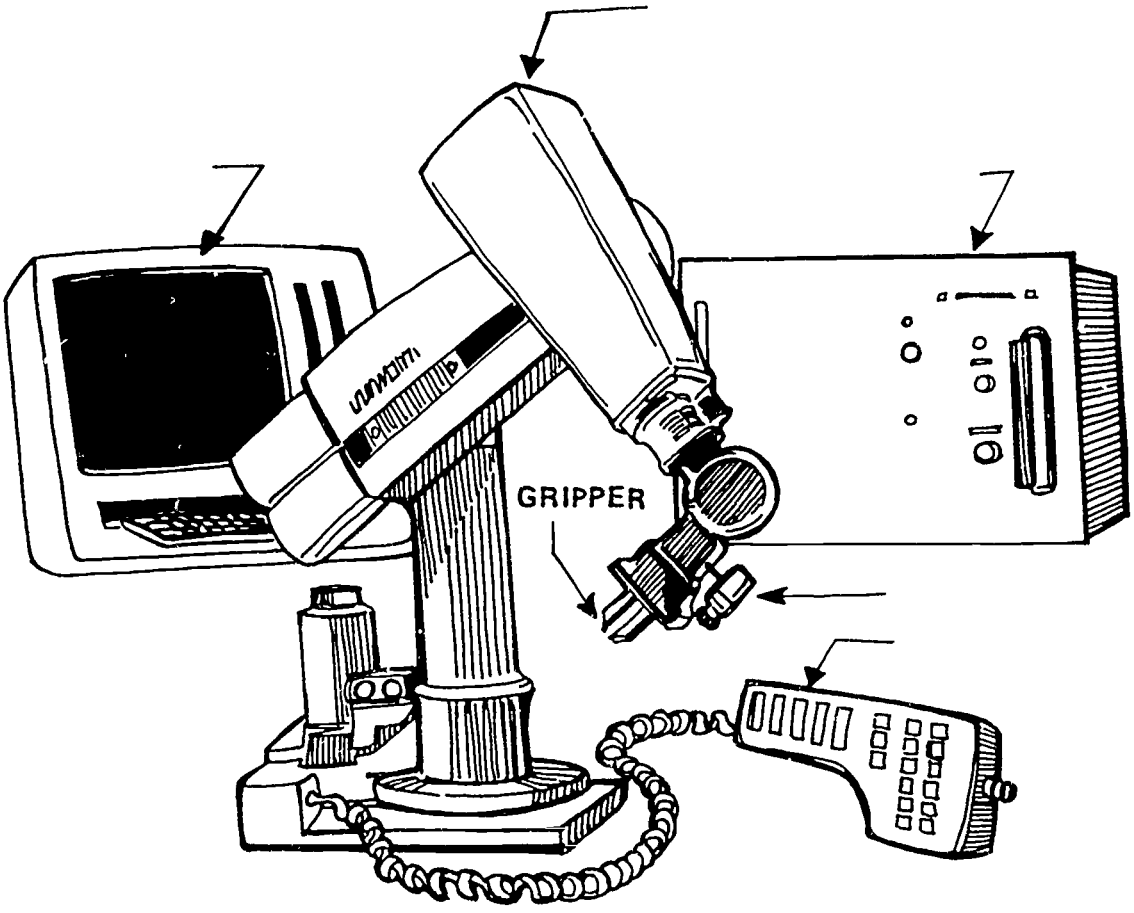

Computer Assisted Drafting (CAD)

SAFETY INSTRUCTIONS

1. Obtain permission and instruction from teacher before operating CAD.
2. Reduce glare by tilting the CRT machine or the screen from 3 to 5 degrees
3. Adjust keyboard and screen to comfortable height and position.
4. Prevent physical and emotional stress by taking a 15 minute break for each hour of CAD work
5. Do not operate CAD without appropriate general facility illumination.

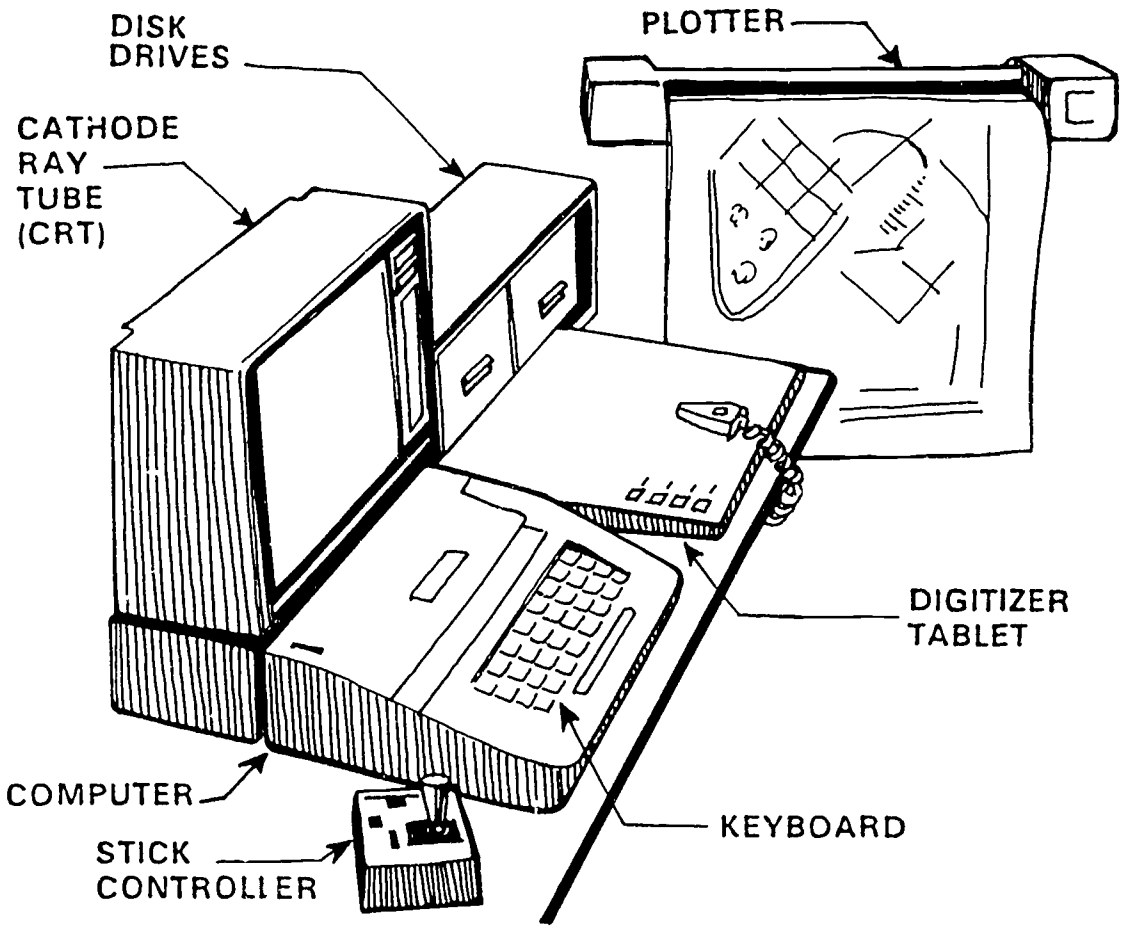

Appendices

APPENDIX A

A Letter to Parents

Dear Parent.

As a part of our vocational education program, your son or daughter will have the opportunity to operate various types of power machinery We would like to stress that, before a student is allowed to operate power tools:

1 S/he will be instructed in the safe use of each power tool s/he will be allowed to use.

2. His/her operating procedures will be checked by the teacher

3 S/he will be supervised while operating the equipment

We want you to know that students' safety is a very important issue and that safety is stressed in our department and throughout the school. We feel that we have a good record in the prevention of student injury while in vocational classes.

In order for us to have an awareness of your knowledge of your child's activities, we must have your consent before allowing your child to use any power equipment We invite you to visit the school laboratories at any time, please check through the school office.

Yours truly,

I give my permission for _____
to use power equipment in the vocational education program at
_____

_____ _____
Parents Signature Date

GENERAL SAFETY RULES

1. Do not enter the lab unless an instructor is present.

2. Eye protection is required when using any power tool or at any other time you suspect there may be eye danger.

3 LONG HAIR IS DANGEROUS Special care must be taken to prevent accidents

4. Proper clothing must be worn No loose, ragged or sloppy clothing is permitted Remove loose jewelry before operating machine.

5. THERE WILL BE ABSOLUTELY NO HORSEPLAY IN THE LAB. Others can be injured by your actions.

6. Devote all of your attention to the machine or tool that you are using.

7. Safety lines are for your protection. Stay behind them unless you are using a machine within the safety line area.

8. Tools and materials can be dangerous. Do not handle unless you have something specific in mind

9. When help is needed on an operation, ask only for enough to do the job

10. Clean your area when through.

11. Disconnect power before changing blades or belts.

12 Do not leave a machine until all motion has stopped

APPENDIX B

Lab Safety Pledge

GENERAL LAB SAFETY PLEDGE

All work performed in the lab will be carried out in the safest possible manner. Any person working in the shop agrees to be safety conscious at all times. It is understood that any violation of the safety regulations contained herein, or given verbally by a teacher, is grounds for immediate removal from the program

1. Do not enter the lab unless a teacher is present.

2. Eye protection is required when using any power tool or at any other time you suspect there may be eye hazards present.

3. LONG HAIR IS DANGEROUS. Special care must be taken to prevent accidents Long hair shall be held back by a cap, headband or hairnet

4. Proper clothing must be worn. No loose, ragged or sloppy clothing will be allowed All loose jewelry must be removed before operating a machine.

5. ABSOLUTELY NO HORSEPLAY IN THE SHOP. Others can be injured by your actions.

6. Devote all of your attention to the machine or tool you are using.

7. Safety lines are for your protection. Stay behind them unless you are using a machine within the safety line area

8. Tools and materials can be very dangerous Do not handle them unless you have something specific in mind.

9 When help is needed on an operation, ask for only enough to do the job

10. Always clean your area when through.

11 Always disconnect power before changing blades or belts.

12 Never leave a machine until all motion has stopped.

13. Throwing any object in the shop is strictly forbidden

I have read the general safety rules listed above and my teacher (teacher's name) _____ _____ has explained them to me. I fully understand them and agree to obey them, at all times, while I am working in the lab. If, at any time, I do not understand what is the safe way to use any hand tool or power tool I will ask my teacher for help before I proceed

_____ DATE

_____ STUDENTS SIGNATURE

APPENDIX C

Safety Test Answer Sheet

SAFETY TEST ANSWER SHEET

Students Name _____ Date _____

Instructions. Read each question carefully and then select the most correct answer and place and "X" over the letter of the answer selected.

MULTIPLE CHOICE

1.	(a)	(b)	(c)	(d)	9.	(a)	(b)	(c)	(d)
2	(a)	(b)	(c)	(d)	10.	(a)	(b)	(c)	(d)
3.	(a)	(b)	(c)	(d)	11	(a)	(b)	(c)	(d)
4.	(a)	(b)	(c)	(d)	12.	(a)	(b)	(c)	(d)
5	(a)	(b)	(c)	(d)	13	(a)	(b)	(c)	(d)
6.	(a)	(b)	(c)	(d)	14.	(a)	(b)	(c)	(d)
7	(a)	(b)	(c)	(d)	15	(a)	(b)	(c)	(d)
8.	(a)	(b)	(c)	(d)	16.	(a)	(b)	(c)	(d)

FILL - IN

1. _____
2. _____
3. _____
4. _____
5. _____
6 _____
7 _____
8. _____
9. _____
10. _____

_____
Students Signature

SAFETY TEST ANSWER SHEET (cont.)

Students Name _____ Date _____

Instructions Read each question carefully and then select the most correct answer and place and "X" over the letter of the answer selected.

TRUE/FALSE

1	(T)	(F)	9.	(T)	(F)
2	(T)	(F)	10.	(T)	(F)
3.	(T)	(F)	11.	(T)	(F)
4.	(T)	(F)	12.	(T)	(F)
5.	(T)	(F)	13	(T)	(F)
6.	(T)	(F)	14.	(T)	(F)
7.	(T)	(F)	15.	(T)	(F)
8.	(T)	(F)	16.	(T)	(F)

_____
Students Signature

186

APPENDIX D

Machine Use Evaluation Record

STUDENT MACHINE USE EVALUATION RECORD

ELECTRICITY & ELECTRONICS _____

Teacher

_____ ___ ___ has been given the proper demonstration, has passed the required safety exams, and is, therefore, permitted to use the following items according to the accepted safety procedures:

Equipment	Date Teacher Demonstration	Written Test Passed	Performance Test Passed
Band Saw			
Drill Press			
Electric Hand Drill			
Hand Tools			
Notcher			
Oscilloscope			
Pan Break			
Shear			
Solder Iron (Electric)			
Solder Iron (Gas Heated)			
V.O.M.			
V T V.M			

STUDENT MACHINE USE EVALUATION RECORD

GENERAL LAB

_____
Teacher

_____ _____ has been given the proper demonstration, has passed the required safety exams, and is, therefore, permitted to use the following items according to the accepted safety procedures:

Equipment	Date		
	Teacher Demonstration	Written Test Passed	Performance Test Passed
Band Saw			
Belt Sander			
Disk Sander			
Drill Press			
Electric Hand Drill			
Finishing Sander			
Grinder			
Hand Tools			
Jig Saw			
Jointer			
Metal Lathe			
Oxy-Acetylene Welder			
Portable Belt Sander			
Router			
Sabre Saw			
Sheet Metal Machines			
Spot Welder			
Table Saw			
Wood Lathe			

STUDENT MACHINE USE EVALUATION RECORD

GRAPHIC ARTS

_____ _____
Teacher

_____ _____ has been given the proper demonstration, has passed the required safety exams, and is, therefore, permitted to use the following items according to the accepted safety procedures:

Equipment	Date Teacher Demonstration	Written Test Passed	Performance Test Passed
Folding Machine			
Offset Press			
Paper Cutter			
Paper Drill			
Pilot Press			
Platen Press			

STUDENT MACHINE USE EVALUATION RECORD

METALS

_____
Teacher

_____ has been given the proper demonstration, has passed the required safety exams, and is, therefore, permitted to use the following items according to the accepted safety procedures:

Equipment	Date Teacher Demonstration	Written Test Passed	Performance Test Passed
Band Saw			
Diacro Bender			
Disk Sander			
Drill Press			
Electric Hand Drill			
Forge Furnace			
Gas Burner			
Grinder			
Hand Tools			
Hole Punch Press			
Lathe			
Melt Furnace			
Milling Machine			
Notcher			
Pan Break			
Power Hacksaw			
Propane Tank			
Shear			

STUDENT MACHINE USE EVALUATION RECORD

POWER MECHANICS

_____
Teacher

_____ has been given the proper demonstration, has passed the required safety exams, and is, therefore, permitted to use the following items according to the accepted safety procedures

Equipment	Date Teacher Demonstration	Written Test Passed	Performance Test Passed
Air-Driven Tools			
Arc Welder			
Battery Charger/Tester			
Brake Bleeder			
Degreaser			
Drill Press			
Electric Hand Drill			
Grinder			
Hand Tools			
Hole Punch Press			
Hydraulic Jack			
Lathe			
Oxy-Acetylene Welder			
Paint Sprayer			
Portable Disk Sander			
Radiator Test Tools			
Solder Iron (Electric)			
Spark Plug Cleaner			
Valve Seat Grinder			

STUDENT MACHINE USE EVALUATION RECORD

WOODS

_____
Teacher

_____ has been given the proper demonstration, has passed the required safety exams, and is, therefore, permitted to use the following items according to the accepted safety procedures:

Equipment	Date Teacher Demonstration	Written Test Passed	Performance Test Passed
Band Saw			
Belt Sander			
Dremel Tool			
Drill Press			
Electric Hand Drill			
Grinder			
Hand Tools			
Jointer			
Lathe			
Oscillating Sander			
Portable Belt Sander			
Router			
Sabre Saw			
Scroll Saw			
Surface Planer			
Table Saw			

APPENDIX E

Student Accident Report Form

STUDENT ACCIDENT REPORT

1 Name

2. Address

3. School

4. Sex Male ☐ Female ☐ Coding info not provided ☐

5. Age 6. Grade/Special Program

7 Date of Accident

8. Time

9. Location of Accident (be specific)

10. Activity of person (be specific)

11. CATEGORY "C" - NATURE OF INJURY

1. WOUND
2. SPRAIN/STRAIN
3. CONCUSSION
4. EYES
5. FRACTURE
6. AMPUTATION
7. BURNS
8. IRRITATION
9. ASPHYXIATION
10. ABRASION
11. NO APPARENT INJURY
12. BUMP/BRUISE
13. DAMAGED TEETH
99. CODING INFO

13. CATEGORY "E" - ACCIDENT JURISDICTION

1. SCHOOL GROUNDS
2. SCHOOL BUILDING
3. TO AND FROM SCHOOL
4. OTHER ACTIVITIES NOT ON SCHOOL PROPERTY
5. HOME (NON-SCHOOL)
6. OTHER (NON-SCHOOL)
99. CODING INFO NOT PROVIDED

12. CATEGORY "D" - TYPE OF ACCIDENT

1. SLIP/FALL
2. PLAYGROUND EQUIPMENT
3. GYM EQUIPMENT
4. LABORATORY/ SHOP EQUIPMENT
5. HORSEPLAY
6. SWIMMING POOL
7. P.E. ACTIVITY
8 INTERSCHOLASTIC SPORTS
9. INTRAMURAL COMPETITION
10. RECESS
11. FIGHTING
12. BITE
13. SLEDDING, SLIDING
14. SKATING
15. FROSTBITE/ FREEZING
99. CODING INFO NOT PROVIDED

14. CATEGORY "F" - BODY AREA AFFECTED

1. HEAD
2. EARS
3. EYE
4. NOSE
5. MOUTH
6. ARM
7. HANDS
8. FINGERS
9. SHOULDER
10. CHEST
11. LEG
12. FOOT
13. TOES
14. BACK
15. INTERNAL INJURIES
16 UPPER BODY MULTIPLE INJURIES
17. LOWER BODY MULTIPLE INJURIES
18. HEAD MULTIPLE INJURIES
19. ABDOMINAL
99. CODING INFO NOT PROVIDED

15. DESCRIBE ACCIDENT AND INCLUDE MACHINE, OBJECT OR SUBSTANCE INVOLVED
GIVE FULL DETAILS AND EXTENT OF INJURY IF ANY

16. Unsafe mechanical, Physical condition or Act

17.Supervision? If yes, give title and name of supervisor
Yes ☐
No ☐

18 Corrective Action Taken or Recommended

19. Date of Report

20. Report prepared by (signature & title)

21. Principals Signature

Distribution - Original and copy to Insurance/Safety Office
Retain copy for file

APPENDIX F

Lab Inspection Procedures

PROCEDURE ON THE USE OF THE CHECK LIST FOR LAB INSPECTIONS

STEP 1. Identify. Determine the problem areas in your vocational program which are represented in this handbook.

General Lab Inspection _____

Automotive _____

Drafting _____

Electricity and Electronics _____

Machine Tools _____

Small Engines _____

Welding _____

Woodworking Machinery _____

STEP 2. Conduct Inspection. As you proceed through the check list, circle one of the items that applies to that particular situation. The categories are listed above

STEP 3. Prepare Report Sheet. After the inspection has been accomplished, complete the report sheet in the following manner:

1 List the code number of the item that is in violation, for example. a violation in the Automotive Lab might look like this; (IIA - 2.) - - this code would refer to a lab floor violation. The report sheet can be found in Appendix H, Page 168.

2. List your recommendation for correcting the situation

3. List violations in the following order.

   a. Imminent danger - to be corrected first
   b. Serious violation - to be corrected second
   c Non-serious violation - to be corrected third
   d. De minimis violation - to be corrected fourth

STEP 4 Correct Violation. After you have remedied the situation, indicate the date on which the required action was taken in the last column of the report sheet.

CHECKING PROCEDURE

Draw a circle around the appropriate letter using the following scheme:

D - De minimis - no direct or immediate relationship to job safety and health

N - Non-serious violation - a violation that does have a direct relationship to job safety and health but would not cause death or serious injury

S - Serious violation - a violation where there is substantial probability that death or serious physical harm could result.

I - Imminent danger - a condition where there is a reasonable certainty that a hazard exists that can be expected to cause death or serious physical harm immediately or before the hazard can be eliminated through regular procedures

S+ - Satisfactory - no recommendation needed. situation in good condition

The check lists for lab inspections are found in Appendix G This is placed here for your reference, and will have its greatest value if it is referred to and used in evaluating your program.

APPENDIX G

Lab Inspection Checklists

I - General Lab Inspection

Name of School Lab: _____

Inspector: _____

Date: _____

A GENERAL PHYSICAL CONDITION

1. Machines, benches and other equipment are arranged so as to conform to good safety practices..... D N S I S+

2. Condition of stairways..... D N S I S+

   A. On stairways less than 44 inches wide having both sides enclosed, at least one handrail, preferably on the right side, descending.

   B. A stair railing shall be of construction similar to a standard railing, but the vertical height shall be not more than 34 inches or less than 30 inches from upper service top rail to surface of tread in line with the face of the riser at the forward edge of the tread.

   C. Loading capacity of handrails and brackets for handrails should be 200 lbs.

   D Fixed stairways shall be constructed to carry a load of five times the normal live load anticipated but never less than the strength necessary to carry safely a moving, concentrated load of 1000 lbs.

3. Condition of aisles and passageways..... D N S I S+

   A. All places of employment, passageways, storerooms and service rooms shall be kept clean, orderly and in a sanitary condition.

   B Permanent aisles and passageways shall be appropriately marked

   C. It shall be unlawful to place, cause or permit to be placed on any floor or roof of a building or other structure a load greater than that for which such floor or roof is approved by the building official.

4 Condition of floors..... D N S I S+

   A Floors of all buildings in which students work shall be maintained in a clean condition, and as far as possible, in a dry condition, consistent with the type of operation carried on

   B. To facilitate cleaning, every floor, working place and passageway shall be kept free from protruding nails, splinters, holes or loose boards.

5. Condition of walls, windows and ceiling ..... D N S I S+

6 Illumination is safe sufficient and well placed..... D N S I S+

A. For most manufacturing operations 30 to 50 footcandles.

B. For most office and clerical work 100 to 200 footcandles.

7. Ventilation is adequate and proper for conditions..... D N S I S+

A. All rooms in which students regularly work shall have not less than 2000 cubic feet of air space per person, regularly based on gross cubical contents, provided the total projected area of doors and windows opening to the out-of-doors is not less than 12 1/2% of the gross floor area of the work room.

8. Temperature control ..... D N S I S+

9 Fire extinguishers are of the proper type, adequately supplied, properly located and maintained..... D N S I S+

A Have all water or soda acid extinguishers located near electrical equipment been removed?

B. Have all carbon tetrachloride extinguishers been eliminated?

C Are all extinguishers weighing 40 lbs or more installed so that the top of the extinguishers are less than 5 feet from the floor ?

D Are all water extinguishers located outdoors during the winter equipped with non-freezing agents ?

E Can you walk less than 75 feet to find fire extinguishers in the work area ?

F Do extinguishers have an inspection tag indicating monthly defect checks ?

10 Teachers and students know location of and how to use proper extinguishers for various fires..... D N S I S+

11. Number and location of exits is adequate and properly identified ..... D N S I S+

A. Do all exits exceed 44 inches in width?

B. Are exit signs with a least 5 footcandles of illumination provided?

C. Is the exit illumination on the schools emergency power supply?

D. Do all exit doors which are kept locked have panic devices?

E Are all areas including basements provided with two or more means of exit?

12 Have proper procedures been formulated for emptying the room of students and taking adequate precautions in case of emergencies?..... D N S I S+

13. Lockers inspected regularly for cleanliness and fire hazards..... D N S I S+

14. Lockers are kept closed..... D N S I S+

15. Walls are clear of objects that might fall..... D N S I S+

16. Do teachers know the procedure in the event of fire, including the notification of the fire department and evacuation plan?..... D N S I S+

17. _____ D N S I S+

18. _____ D N S I S+

19. _____ D N S I S+

20. Evaluation of the total rating of (A) GENERAL PHYSICAL CONDITION... D N S I S+

B. HOUSEKEEPING

1. General appearance as to orderliness..... D N S I S+

2. Adequate and proper storage space for tools and materials..... D N S I S+

3. Benches are kept orderly..... D N S I S+

4. Corners are clean and clear..... D N S I S+

5. Special tool racks are provided at benches and machines, and are in an orderly condition..... D N S I S+

6. Tool, supply and/or material rooms are orderly..... D N S I S+

7. Sufficient scrap boxes are provided..... D N S I S+

8. Scrap stock is promptly put in scrap boxes..... D N S I S+

9. Materials are stored in an orderly and safe condition..... D N S I S+

10. A spring lid, metal container is provided for waste and oily rags..... D N S I S+

11. All waste materials and oily rags are promptly placed in the containers..... D N S I S+

12. Containers for oily rags and waste materials are frequently and regularly emptied..... D N S I S+

13. Dangerous materials are stored in metal cabinets..... D N S I S+

A. Are all flammables within the work area stored in U.L. approved 5 gallon or less safety cans?

14. Equipment has been color conditioned.. ..... D N S I S+

A. RED - Fire protection equipment and apparatus, safety cans and stop equipment

B. ORANGE - Designating dangerous parts of machines

C. YELLOW - Designating caution and marking physical hazards

D. GREEN - Designating "Safety and First Aid equipment"

E. BLUE - Caution against starting equipment that is being repaired

F. BLACK, WHITE or COMBINATION - Traffic and housekeeping

G. PURPLE - Basic danger of radiation

15. Bulk storage of dangerous materials is provided outside of the main building..... .. D N S I S+

A. Do you have a written procedure that requires that not more than 25 gallons of flammable liquid shall be stored outside of a storage cabinet or storage room ?

B. Are outside flammable storage areas enclosed or otherwise protected from heat and mobile equipment exposure ?

C. Are 55 gallon drums used for dispensing flammables equipped with flame arrestors and are the drums grounded?

16 There is a toe-board or railing around a mezzanine used for storage or washing facilities..... .. D N S I S+

17. Flammable liquids are not used for cleaning purposes.. ..... D N S I S+

18. Floors are free of oil, water and foreign material..... D N S I S+

19 _____ D N S I S+

20. _____ D N S I S+

21. _____ D N S I S+

22. Evaluation of the total rating for (B) HOUSEKEEPING..... D N S I S+

C EQUIPMENT

1. Machines are arranged so that workers are protected from hazards of other machines, passing students, etc..... D N S I S+

2. Danger zones are properly indicated and guarded... D N S I S+

3. All gears, moving belts, etc. are protected by permanent enclosure guards..... D N S I S+

   A. Each of the following motions can produce a crushing or shearing action. Are they properly guarded?

      1. Rotary motion, example: flywheels, pulleys, belts, screws, etc

      2. Reciprocating motion, example: Shears, Rams, Shapers, Presses, etc.

4. All equipment control switches are easily available to operator..... D N S I S+

5. All machines are "locked off" when teacher is out of the room..... D N S I S+

6. Brushes are used for cleaning equipment..... D N S I S+

7. Non-skid areas are provided around machines ..... D N S I S+

8. Machines are in safe working condition..... D N S I S+

9. Adequate supervision is maintained when students are using machines and dangerous tools..... D N S I S+

10. Tools are kept sharp, clean and in safe working order..... D N S I S+

11 All hoisting devices are in safe operating condition..... D N S I S+

   A Do you have an inspection plan with records to indicate monthly and yearly inspection of control mechanisms, safety devices, rope deterioration, sleeve wear, etc ?

   B. Are all hooks equipped with safety latches ?

   C Do all cables have the required number of clamps and U-bolt spacing ?

   D Are weight limits posted on the lifting device and lift support ?

12 Machines are shut off while unattended..... D N S I S+

13 Adequate storage facilities for tools, equipment, etc. that is not in immediate use. ..... D N S I S+

14. _____ D N S I S+

15. Evaluation of the total rating for (C) EQUIPMENT..... D N S I S+

D. PERSONAL PROTECTION

1. Goggles or protective shields are provided and required for all work where eye hazards exist..... D N S I S+

2 If individual goggles are not provided, hoods and goggles are properly disinfected before use..... D N S I S+

A Do you have an inspection and replacement system established to detect and replace pitted or scratched lenses ?

3 Shields and goggles are provided for electrical welding..... D N S I S+

4. Rings and other jewelry are removed by students when working in the lab..... D N S I S+

5 Appropriate kinds of wearing apparel are worn, and worn properly for the job being done..... D N S I S+

6. Leggings, safety shoes, etc., are worn in special classes such as foundry, when needed..... D N S I S+

7 Respirators are provided for dusty or toxic atmospheric conditions, such as spraying in the finishing room..... D N S I S+

8 Provisions are made for cleaning and sterilizing respirators..... D N S I S+

9 Sleeves are rolled above elbows when operating machinery..... D N S I S+

10 Students do not wear loose sleeves, flopping ties, loose coats, etc..... D N S I S+

11 Skin guards are provided, along with hard hats, aprons, gloves, sleeves, etc. where there are hazards of environmental, chemical, radiological or mechanical irritants present that are capable of causing injury or impairment of any part of the body through absorption or physical contact..... D N S I S+

12 Do you provide personal ear protection equipment and a sound testing program where engineering controls have failed to reduce noise levels below 90 dB ?.... D N S I S+

13 _____ D N S I S+

14 _____ D N S I S+

15 _____ D N S I S+

16 Evaluation of the total rating for (D) PERSONAL PROTECTION..... D N S I S+

202

E ACCIDENT RECORDS

1. There is a written statement outlining the proper procedure to follow when and if a student is seriously injured..... D N S I S+

2. Adequate accident statistics are kept.... ..... D N S I S+

   A. Are OSHA posters prominently displayed ?

   B. Are you using OSHA forms 100, 101 and 102 for records on accident and health exposures ?

   C. Do you have a written accident investigation procedure ?

   D. Do you have a written hazard inspection procedure and is there evidence that it has been followed in the last 30 days ?

   E. Do you have a written housekeeping plan or procedure and is there evidence that it has been followed in the last 30 days ?

   F Do you have a safety committee and is there evidence of any results from that committee in the last 30 days ?

   G. Do you have any evidence to show training, education or student relations activity with the purpose of keeping students aware of the best safety and health practices at your lab ?

3. Accidents are reported to the proper administrative authority by the teacher. ..... D N S I S+

4 A copy of each accident report is filed with the Board of Education..... D N S I S+

5. Accident reports are analyzed for instructional purposes and to furnish the basis for elimination of hazards..... D N S I S+

6 _____ D N S I S+

7. _____ D N S I S+

8. _____ D N S I S+

9. Evaluation of the total rating for (E) ACCIDENT RECORDS..... D N S I S+

F. FIRST AID

1. The school shall ensure the ready availability of medical personnel for advice and consultation on matters of school health..... D N S I S+

2 In the absence of an infirmary, clinic or hospital, which is used for the treatment of all injured students, being in near proximity to the workplace, a person or persons shall be adequately trained to render first aid. First aid supplies approved by the consulting physician shall be readily available..... D N S I S+

3. Where the eyes or body of any person may be exposed to injurious, corrosive materials, suitable facilities for quick drenching or flushing of the eyes and body shall be provided within the work area for immediate emergency use..... D N S I S+

4. _____ D N S I S+

5 _____ D N S I S+

6. Evaluation of the total rating for (F) FIRST AID..... D N S I S+

G. INSTRUCTION

In considering the types of responses needed for the categories in this area, you should mark your findings as Satisfactory (S) or Unsatisfactory (U).

1. Lab Safety is taught as an integral part of each teaching unit..... S U
2. Safety rules are posted, particularly at each dangerous station..... S U
3. Printed safety rules are given to each student..... S U
4. Use of a safety inspector..... S U
5. Use of a student lab safety committee..... S U
6. Use of safety curriculum contents. ..... S U
7. Motion pictures and/or slide films on safety are used in the instruction..... S U
8. Use of a suggestion box ..... S U
9. Use of safety tests.. ..... S U
10. Use of safety posters ..... S U
11. Talks on safety are given to the classes by men from industry ..... S U
12. Tours are taken of industrial plants as a means of studying safety practices..... S U
13. Periodic safety inspections of the lab are made by a student committee..... S U
14. Men from industry make safety inspections of the lab..... S U
15. Student lab safety committee investigates all accidents..... S U
16. A proper record is kept of safety instructions which are given, preferably showing the signature of the student on tests given in this area..... S U
17. Rotate students on the lab Safety Committee so that as many students as possible have an opportunity to participate..... S U
18. _____ S U
19. _____ S U
20. Evaluation of the total rating for (G) INSTRUCTION ..... S U

H. ELECTRICAL INSTALLATION

Electrocution and Ignitio./Explosion are the two primary hazards associated with electricity. Electrical safety is the provision of safeguards to avoid these hazards and to protect people, buildings and their contents. The basics of these safeguards can be expressed with the following statements

1. Ground everything that might become accidentally energized.

2. Keep electricity separated from what isn't to be energized.

3. Keep heat and sparks caused by electrical conditions and equipment from starting a fire or triggering an explosion

4. Don't assume safety. Electrical equipment is dangerous until made or proven safe.

Three of these basic rules are expanded upon with practical directions for applications in the National Electrical Code published by the National Fire Protection Association, Boston, Mass. - 02210. The fourth statement listed above is an attitude, and depends on you. Don't take anything for granted Check if your not sure and be sure only after checking.

1 All switches are enclosed..... D N S I S+

2 There is a master control for all of the electrical installations..... D N S I S+

A Is the voltage and intended use of switches, circuit breakers and other electrical control devices clearly posted on each device ?

3. All electrical extension cords are in safe condition and are not carrying excessive loads..... D N S I S+

4. All machine switches are within easy reach of the operator..... D N S I S+

5. Individual cut-off switches are provided for each machine..... D N S I S+

6. Machines are provided with overload and underload controls by magnetic pushbutton..... D N S I S+

7 No temporary wiring is in evidence..... D N S I S+

8. All switches or other electrical gear carrying 50 to 600 volts is enclosed and/or grounded..... D N S I S+

9. Storage of any materials within transformer vaults is prohibited..... D N S I S+

10. _____ D N S I S+

11. _____ D N S I S+

12. Evaluation of the total rating for (H) ELECTRICAL INSTALLATION..... D N S I S+

II - Automotive Lab

A LAB FLOOR

1. The lab floor should have an approved industrial concrete sealer which prevents absorption of oil, solvents and fuels..... D N S I S+

2 The floor should have an anti-skid area around wash stands and solvent tanks..... D N S I S+

B LAB VENTILATION

1. Adequate ventilation is provided for the dissipation of exhaust gasses from small engines and welding gas fumes..... D N S I S+

2 Exhaust hoses are provided to carry automotive exhaust outside of the lab..... D N S I S+

3. Adequate ventilation is provided for those areas where solvents and toxic materials are stored..... D N S I S+

C MACHINING EQUIPMENT

1 Face guards are provided where grinding wheels and wire wheels are being used..... D N S I S+

2. Machines are properly grounded..... D N S I S+

3 Machines are properly fastened to work benches or stands..... D N S I S+

D DANGEROUS LIQUIDS

1. All containers for battery acid, fuel and solvents are properly marked and OSHA approved..... D N S I S+

2. These liquids are stored in a well-ventilated area and are away from sparks or open flames..... D N S I S+

E AUTOMOTIVE LIFTS

1 Hydraulic lifts are provided with safety stops to prevent the lift from collapsing..... D N S I S+

F ADEQUATE LIGHTING

1 The lab lighting is such that measuring instrument and machining operations can be seen clearly and without glare..... D N S I S+

III - Drafting Room

A. GENERAL

1. Provide safety education as an integral part of drafting training..... D N S I S+

2. Maintain a rotating clean-up and safety program with individual assignments of specific duties..... D N S I S+

3. Provide for proper operation and functioning of audio-visual and instructional aid equipment..... D N S I S+

4. All equipment used by students must be kept in a safe and useful working condition..... D N S I S+

5. Pencil points should not have excessively sharp tips. Sharp tips on pencils can puncture paper as well as break off and strike someone in the eye..... D N S I S+

6. Sharpen pencils on one end only..... D N S I S+

7 Keep pointed objects, such as pencil points out of the mouth and ears.. D N S I S+

8. Sharp tools such as compass points, dividers, scissors and pencil points shall be laid in positions out of the way and out of danger to someone else when not in use..... D N S I S+

9. Sharp tool must be handled and used very carefully when passing or carrying from oneposition to another..... D N S I S+

10. Remove items such as: waste paper, tape, pencils, erasers, thumb tacks, etc., from the floor and put in their appropriate places..... D N S I S+

11. Drawers in drafting tables and file cabinets should be kept closed at all times to avoid falls..... D N S I S+

12. Fasten files cabinets to avoid tipping when only the top drawers are open..... D N S I S+

13. Maintain proper usage and spring tension on all paper cutters, including scissors..... D N S I S+

14. Avoid placing fingers into openings of machines where paper is normally fed..... D N S I S+

15. All equipment when not in use must have a specific allotted space for storage..... D N S I S+

16. Students should not lean back or tilt stools or chairs..... D N S I S+

17. Provide non-skid tips on drafting stools to prevent slipping on slick floor surfaces..... D N S I S+

18. When not using the drafting stool, push it under the drafting table to maintain an unobstructed traffic flow pattern..... D N S I S+

19. Recognize the inherent dangers of the reproduction equipment..... D N S I S+

    A. Instruct students regarding proper equipment usage.

    B. Provide a mechanically controlled exhaust system for vent ion of ammonia vapors.

    C. Follow manufacturers recommendations on the storage and handling of ammonia

    D. Always shut off the master power switch when cleaning or maintaining the reproduction machine or bulb.

20. Adjust drafting board and stool per individual student to attain a comfortable drafting position..... D N S I S+

21. Avoid pinching of fingers and hands when raising or lowering drafting board tops..... D N S I S+

22. Work at the drafting board in a position that does not endanger your elbow. Excessive leaning on one elbow can cause inflammation of the bursa or bursitis..... D N S I S+

23. Never overcrowd a drafting room. ..... D N S I S+

    A. Too many individuals can cause horseplay which generally results in accidents The recommended capacity of a drafting room, according to the State of Illinois, Efficient and Adequate Standards for the Construction of Schools, is one (1) student for every 50 feet of floor space.

24. Arrange the drafting room to provide traffic areas separate from work areas..... D N S I S+

25. Provide aisles, working spaces and direct exiting of a minimum 36 inch width, to be functional for the physically handicapped..... D N S I S+

26. The temperature of the drafting room should be maintained at an optimum level for each particular season of the year..... D N S I S+

    A Room temperature is measured at the center of the room, 5 feet above the floor.
    Summer - 72'
    Fall - 74'
    Winter - 76'
    Spring - 74'

    NOTE. Due to the varying conditions of building construction and the humidity these temperatures may vary ± 5' F.

27 Avoid eyestrain - never work continuously at the drafting board without taking an occasional short break..... D N S I S+

28. Avoid shadows and bright sunlight as sources of illumination..... D N S I S+

29. Reflect artificial light, when such light is required..... D N S I S+

30. During school hours, maintain unrestricted exit pathways from the building..... D N S I S+

31. For proper fire protection and smoke stop separation, doors with closers should not be propped open. However, in the case where the door closer has a hold-open device it is permitted to have the door in an open position.... D N S I S+

32. No furnishings, decorations, wall coverings, paintings, etc. shall be used which are of a highly flammable character or which, in the amounts used, will endanger egress due to the rapid spread of fire or formation of heavy smoke or toxic gasses..... D N S I S+

IV - Electricity and Electronics Labs

A GROUNDING: ARTICLE 250, N.E.C.

1. All outlets have a safety ground..... D N S I S+
2. Safety grommets are intact with less than a 5% voltage drop with rated current..... D N S I S+
3. Frames of electrical machinery grounded..... D N S I S+
4. Neutral is connected to ground at the main service panel..... D N S I S+
5. The grounding conductor and the neutral conductor run separately through the building..... D N S I S+
6. All neutrals are identified with a "W" or "WH"..... D N S I S+

B SEPARATION

1. All energized conductors are in conduit, walls, boxes and panels, placed so that no possibility of a dangerous current can occur..... D N S I S+
2. Insulation is adequate for voltage and temperature..... D N S I S+
3. All hot wires are clear of combustible material..... D N S I S+
4. In hazardous locations, all arcing contacts are enclosed in explosion proof boxes..... D N S I S+

C OVER-CURRENT PROTECTION: ARTICLE 240, N.E.C.

1. Amp capacities of wires are adequate (table 310-20, N.E.C.)..... D N S I S+
2. Circuits are fused according to their capacity..... D N S I S+

D GROUNDFAULT

1. Ground fault circuit interrupters are installed in wet or other hazardous locations..... D N S I S+
2. Receptacles are in good mechanical condition..... D N S I S+
3. Receptacles are wired with proper polarity..... D N S I S+
4. Power cords are of satisfactory size and quality to withstand both normal and excessive wear and tear..... D N S I S+
5. Strain reliefs and grommets are of sufficient strength to prevent groundfaults at the entrance to the equipment..... D N S I S+

6. Do you have proper instruments for checking leakage of current ?.....D N S I S+

7. Never use a 3 to 2 cheater plug.....D N S I S+

8. Do not place electrical equipment on a metal table.....D N S I S+

9. Use slow blow fuses as little as possible.....D N S I S+

10. Use an isolation transformer when working on a chassis that does not have a transformer.....D N S I S+

11. Do not use 2 wire extension cords.....D N S I S+

The following actions of the 1971 National Electrical Code are retroactive. All installations must be updated to comply with these sections.

Sections: 100 -14,-17,-18,-21,22
240 -16,19
250 -3,-5,-7,-42,-43,-44,-45,-50,-51,-52,-57,-59
400 -3,-4,-5,-9,10
422 -8,-9,-10,-11,-12,-14,-15,-16,-17
430 -142,-143

Articles: 500, 501, 502, 503

The N.E C. requires that receptacles on the same premises of different voltage, frequency and current (A.C., D.C.) to be non-interchangeable. The only industry-wide standard that insures non-interchangeable configuration is the National Electrical Manufacturers Association standards. N E.M A configuration charts are available at most electrical supply houses.

V - Machine Tools

A. METAL GRINDING GUARDS AND DEVICES

1. Eye protection devices are provided for all grinding operations.....D N S I S+
2. Abrasive wheels are guarded except those used for internal grinding, and mounted wheels, under 2 inches, used in portable operations.....D N S I S+
3. The safety guard covers the not, spindle edge and flange projections.... D N S I S+
4. Grinding wheels are secured with flanges, no less than 1/3 of the wheels diameter..... D N S I S+
5. Cylindrical Grinders. The maximum angular exposure of the grinding wheel periphery and sides for safety guards does not exceed 180°..... D N S I S+
6. Surface grinders and abrasive cut-off machines. The maximum angular exposure of the guard does not exceed 150°..... D N S I S+
7. Wheel flanges are free of rough surfaces or sharp edges and are well balanced.....D N S I S+
8. All wheels are inspected and sounded before mounting.....D N S I S+
9. Wheels are balanced and trued.....D N S I S+
10. Wheels are not loaded or glazed.....D N S I S+
11. Bushings used in the wheel do not exceed the width of the wheel..... D N S I S+
12. Blotters cover the entire contact area of the flanges ..... D N S I S+
13. Electrical controls are easily accessible to the operator..... D N S I S+
14. Abrasive machines are equipped with exhaust systems..... D N S I S+
15. "Slip-proof" strips with coated abrasive granules are located in the standing area of the operator..... D N S I S+
16. Individual lights are located on abrasive machines.....D N S I S+
17. Abrasive machines are securely anchored to prevent "walking"..... D N S I S+
18. Ear protective devices are provided if machines exceed 90 dB.....D N S I S+
19. The guard design does not allow the angular exposure of the grinding wheel to exceed 90°..... D N S I S+

20. On off-hand grinding machines, work rest are used to support the work.. D N S I S+

21. Work rest are rigid in construction and are adjustable to within 1/8 inch of the abrasive wheel..... D N S I S+

22. Abrasive wheels do not have an arbor size (hole) larger in diameter than one-quarter (1/4) of the wheel diameter..... D N S I S+

23. Switches, resets, grounding and other electrical installations and utilization equipment meets the National Electrical Code, NFPA 70-1971; ANSI - C1-1971..... D N S I S+

B. METAL SAWS

1. Blade tensioning devices are in good working order and are designed to compensate for slightly oversize and undersize blades..... D N S I S+

2. Electrical cord switch is located on the "cut-off side" of the machine and is easily reached by the operator..... D N S I S+

3. Vises and other work holding devices are readily adjustable and in good working order..... D N S I S+

4. Metal saws should be placed so that long stock will not protrude into walkways..... D N S I S+

5. An adjustable support is provided to support long stock..... D N S I S+

6. Feed mechanisms are in good working order so as to feed the blade or work slowly and gradually into the work or the blade..... D N S I S+

7. Power driven gears are guarded at all times..... D N S I S+

C. TURNING, BORING, DRILLING MACHINES

1. Approved eye protection devices are provided that have been designated for the type of work being done..... D N S I S+

2. Electric controls are located so that they may be easily reached by the operator, regardless of which side of the machine he is standing..... D N S I S+

3. Vises and other work holding devices are in good repair and meet safety specifications..... D N S I S+

4. All pulleys, gears, belts and other power transmitting mechanisms are in good working condition and completely enclosed with approved guards. D N S I S+

5. Means are provided to clamp, bolt or otherwise secure stock to tables, plates or other work surfaces..... D N S I S+

6. All tools are sharp and ground to proper angles..... D N S I S+

7. Single point cutting tools, used in drilling-boring machines, such as flycutters, are completely guarded to protect operator's hands, as well as to deflect chips..... D N S I S+

8. Machines are secured to the floor..... D N S I S+

9. Spindles, arbors and chucks are true and operate with minimal "play"..... D N S I S+

10. Floor area is dry and free of objects over which the operator might trip. Recommended slip-proof strips applied to floor in general area..... D N S I S+

11. All revolving collars and couplings are cylindrical, and screws and bolts used in these do not project beyond the periphery of the collar ..... D N S I S+

D. HAND TOOLS (Machine Tool Area)

1. Hand tools are stored in tool cabinets, tool rooms, etc. and are easily accessible to the worker..... D N S I S+

2. Tools are stored with sharp or pointed ends sheathed..... D N S I S+

3. Tools are stored in cabinets at a height of 6 feet or less..... D N S I S+

4. Sharp and/or pointed hand tools are stored at a low height..... D N S I S+

5. Tote carts and/or tote trays are provided for transporting tools to and from the machines..... D N S I S+

6. Chisels are properly sharpened and free from "mushroomed" heads .. D N S I S+

7. Brass, lead and non-ferrous hammers are free of loose heads and are not "mushroomed"..... D N S I S+

8. Signs indicating possible hazards of hand tools are located in or near storage areas..... D N S I S+

9 Tool storage cabinets are not located in hazard areas. Example: tool cabinet located in front of abrasive cut-off machine..... D N S I S+

10. Tools which are broken, damaged or in need of repair or reconditioning are not replaced in the tool cabinet..... D N S I S+

11. Screwdrivers are properly ground, with an assortment of sizes available. D N S I S+

12. Tool storage facilities with swinging doors swing 180° or are so designed that they do not block aisles and/or passageways..... D N S I S+

VI - Small Engine Lab

A. GENERAL

1. All students must wear eye protection..... D N S I S+

2. Small engines are not run without mufflers or muffler systems in place..... D N S I S+

3 Ventilation for exhaust fumes must be adequate..... D N S I S+

4 Proper instruction for working with and handling possible flying hazards such as valve springs, impact wheel pullers, piston rings, etc. has been provided..... D N S I S+

5. A permanent mounting frame is used to start and adjust all small engines D N S I S+

6 The floor is clean and free of any oil or grease spillage..... D N S I S+

7 All shrouds, shields and protection devices are in place on small engines and power lawnmowers before they are started..... D N S I S+

8. Appropriate clothing is worn properly for the job being done. Coveralls and shop coats are washed at regular intervals established by the teacher..... D N S I S+

9. All flammable and combustible materials are properly stored and handled D N S I S+

10 All positions of the operating controls on power lawnmowers are clearly identified..... D N S I S+

11 Blades are checked by running the mower at manufacturers specified maximum speed, de-clutching or shutting off the power, and making sure the blade stops within a 15 second time limit..... D N S I S+

12 Blades on rotary mowers are checked for a maximum top speed of 19,000 feet per minute..... D N S I S+

VII - Welding Lab

A. ARC WELDING

1. Helmets and welding goggles must be free of cracks and holes..... D N S I S+

2. Wear protective clothing..... D N S I S+

3. Safety lenses in goggles and helmets must be used for both electric arc and oxy-acetylene welding..... D N S I S+

4. Filter lenses or windows with the proper shade number should be used.. D N S I S+

WELDING OPERATION	SHADE NUMBER
A. Shielded metal arc welding with 1/6, 3/32, 1/8, and 5/32 inch electrodes	10
B. Inert-gas metal arc welding (non-ferrous) with 1/16, 3/32, 1/8, and 5/32 inch electrodes	11
C. Inert-gas metal arc welding (ferrous) with 1/16, 3/32, 1/8, and 5/32 inch electrodes	12
D. Shielded metal arc welding with 3/16, 7/32, 1/4 inch electrodes	12
5/16 and 3/8 inch electrodes	14
E Atomic hydrogen welding	10 - 14
F Carbon arc welding	14

5. Capes or shoulder covers made of leather or other suitable materials are to be worn during overhead welding or cutting operations..... D N S I S+

6. Wear leather gauntlet type gloves that can be thrown off..... D N S I S+

7. Wear high top shoes rather than undercut shoes..... D N S I S+

8. Always wear eye protection when chipping..... D N S I S+

9. Keep sleeves and pants cuffs rolled down and collar buttoned up..... D N S I S+

10. Always mark hot metal "HOT"..... D N S I S+

11. Where small work must be handled, have pliers, tongs or other appropriate tool nearby..... D N S I S+

12. Never strike an arc on compressed air cylinders..... D N S I S+

13. Clean metal surfaces before welding.....D N S I S+

14. Work in a dry area.....D N S I S+

15. Keep cables away from your body so that you may move freely.....D N S I S+

16. Don't change polarity or connections when a welder is being used.....D N S I S+

17. Adequate ventilation is provided to pull all smoke and fumes given off by the welder and materials.....D N S I S+

18 All flammable matenals used should be removed from the work area.....D N S I S+

19. The floor is free of all electrodes.....D N S I S+

20. Clamps and other tools are kept off the floor and put away.....D N S I S+

21 Gasoline powered welders are only used where exhaust fumes do not impair the health and safety of personnel in the area.....D N S I S+

22. Tack welding is never done without a helmet.....D N S I S+

23. Terminals for welding leads should be protected from accidental electrical contact by personnel or metal objects.....D N S I S+

24. All ground connections should be mechanically strong and electricaliy adequate for the required current.....D N S I S+

25. For individual welding machines, the rated current-carrying capacity of the supply conductors shall not be less than the rated primary current of the welding machine .....D N S I S+

26 Grounding of the welding machine frame shall be checked.....D N S I S+

A. Special attention shall be given to safety ground connections of portable machines.

27 Electrode holders, when not in use, shall be so placed that they cannot make electrical contact with persons, conducting objects, fuel or compressed gas tanks.....D N S I S+

28. Cables with splices within 10 feet of the holder shall not be used.....D N S I S+

29. Machines which have become wet shall be thoroughly dried and tested before being used.....D N S I S+

30. Work and electrode lead cables should be frequently inspected for wear and damage.....D N S I S+

31. Each machine shall have a safety-type disconnecting switch or circuit breaker, to open each power circuit to the machine, conveniently located at or near the machine, so that power can be shut down for servicing..... D N S I S+

32. Ignition tubes used in resistance welding equipment are equipped with a thermal protection switch..... D N S I S+

33. Controls of all automatic, air or hydraulic clamps shall be arranged and guarded to prevent the operator from accidentally activating them..... .... D N S I S+

34. Spot and seam welding machines (non-portable) external weld initiating control circuits shall operate on low voltage, not over 120 volts, for the safety of the operators..... ..... D N S I S+

35. All foot switches shall be guarded to prevent accidental operation of the machine..... D N S I S+

36. The hazard of flying sparks should be eliminated by the use of shields.. D N S I S+

37. Ducts and conveyor systems that might carry sparks to distant combustibles shall be protected or shut down..... D N S I S+

38. Cutting or welding on barrels, drums or other containers shall take place only after they are thoroughly cleaned..... D N S I S+

39 Welding cable and other equipment should be clear of passageways, ladders and staircases..... D N S I S+

40. Adequate ventilation must be provided in all welding areas to pull out fumes given off during the welding process..... D N S I S+

B. GAS WELDING EQUIPMENT

1 Acetylene shall be generated, piped (except in approved cylinder manifolds) or utilized at a pressure in excess of 15 p.s.i. gauge pressure, or 30 p.s.i. absolute pressure..... D N S I S+

2. Only approved apparatus such as torches, regulators or pressure reducing valves, acetylene generators and manifolds shall be used... .... D N S I S+

3. All portable cylinders used for storage and shipment of compressed gasses shall be in accordance with the regulations of the U.S. Dept. of Transportation .... D N S I S+

4. Compressed gas cylinders shall be legibly marked for the purpose of identifying the gas content, with either the chemical or the trade name of the gas..... D N S I S+

5. Compressed gas cylinders shall be equipped with connections complying with the American National Gas Cylinder Valve Outlet and Inlet Connections, (ANSI, B57.1-1965)..... D N S I S+

6. All cylinders with a water weight capacity of over 30 lbs. shall be equipped with a means of connecting a valve protection cap or with a collar or recess to protect the valve..... D N S I S+

7 Cylinders shall be kept away from radiators and other sources of heat..... N S I S+

8. Inside buildings, cylinders shall be stored in a well protected, well ventilated, dry location at least 20 feet from any highly combustible materials. Cylinders shall not be kept in unventilated enclosures such as lockers or cupboards..... D N S I S+

9. Empty cylinders shall have their valves closed..... D N S I S+

10. Valve protection caps shall always be in place, hand tight, except when cylinders are in use or connected for use..... D N S I S+

11. Inside a building, cylinders except those in actual use or attached ready for use, shall be limited to a total gas capacity of 2,000 cubic feet or 300 lbs. of liquified petroleum gas..... D N S I S+

12. Special storage must be provided for cylinders that exceed the 2,000 cubic feet or 300 lbs. limit..... D N S I S+

13 Acetylene cylinders shall be stored valve end up..... D N S I S+

14. Oxygen cylinders shall not be stored near highly combustible materials, or in an acetylene generator compartment..... D N S I S+

15. Oxygen cylinders in storage shall be separated from fuel-gas cylinders of combustible materials (especially oil and grease), a minimum distance of 20 feet or by a non-combustible barrier at least 5 feet away, and having a fire-resistance rating of at least one-half hour..... D N S I S+

16 Cylinders, cylinder valves, couplings, regulators, hose and apparatus shall be kept from oily or greasy substances..... D N S I S+

17. Cylinders shall not be dropped, struck or permitted to strike each other violently..... D N S I S+

18. Unless cylinders are secure on a truck, regulators shall be removed and valve protection caps shall be put in place before cylinders are moved..... D N S I S+

19. Cylinders not having fixed hand wheels shall have keys, handles or non-adjustable wrenches on valve stems while these cylinders are in service.. D N S I S+

20. Cylinder valves shall be closed before moving cylinders..... D N S I S+

21. Cylinder valves shall be closed when work is finished..... D N S I S+

22. Cylinders shall be placed far enough from the actual welding or cutting operation so that sparks, hot slag or flame will not reach them, or fire resistant shields shall be provided..... D N S I S+

23. Cylinders shall not be placed where they might become part of an electrical circuit.....D N S I S+

24. Cylinders, full or empty, shall never be used as rollers or supports .....D N S I S+

25. No one shall tamper with safety devices in cylinders and valves.....D N S I S+

26. Unless connected to a manifold, oxygen from a cylinder shall not be used without first attaching an oxygen regulator to the cylinder valve.....D N S I S+

27. The cylinder valve must be opened slowly.....D N S I S+

28. An acetylene cylinder shall not be opened more than 1 & 1/2 turns of the spindle and preferably not more than 3/4's of a turn..... D N S I S+

29. Before a regulator is removed from a cylinder valve, the cylinder valve shall be closed and the gas released from the regulator.....D N S I S+

30. A faulty cylinder shall be tagged and removed to a safe area; notify the supplier immediately .....D N S I S+

31. Oxygen and acetylene cylinders shall both be stored in the vertical position and secured to a wall or some type of stationary object with a chain.... ... D N S I S+

32. Where a special wrench is required, it shall be left in position on the stem of the valve while the cylinder is in use so that the fuel-gas flow may be quickly turned off in an emergency..... ..... D N S I S+

33. Manifolds should be approved separately for each component part or as an assembled unit.....D N S I S+

34. If cylinders are found to have leaky valves or fittings which cannot be stopped by closing the valve, the cylinders shall be taken outdoors, away from sources of ignition, and slowly emptied.....D N S I S+

35. Valve-protection caps shall not be used for lifting cylinders from one vertical position to another. Bars shall not be used under valves or valve protection caps to pry cylinders loose when frozen. The use of warm (not boiling) water is recommended.....D N S I S+

36. All manifolds and parts used in methods of manifolding shall be used only for the gas or gasses for which they are approved.....D N S I S+

37. Helmets, hand shields and goggles with clear or color lenses shall be provided for all welding operations..... .....D N S I S+

38 Protective clothing, gauntlet gloves, aprons, high top shoes and leathers shall be provided and used, correctly, for all welding operations.....D N S I S+

VIII - Woodworking Machinery

A GENERAL

1. Dull, badly set, improperly filed or improperly tensioned saws shall be immediately removed from service.....D N S I S+

2. All belts, pulleys, gears, shafts and other moving parts shall be guarded. D N S I S+

3. If a power hand tool uses more than 90 volts, it has to be grounded through the use of a separate grounding wire, polarized plug and receptacle.....D N S I S+

4. Power controls and operating controls should be located within easy reach of the operator while at the regular work location, making it unnecessary to reach over cutter to make adjustments.....D N S I S+

5. All knives and cutting heads of woodworking machines shall be kept sharp, properly adjusted and firmly secured. ..... D N S I S+

6. Bearings shall be kept free and well lubricated..... D N S I S+

7. Arbors of all table saws and other machines shall be tight fitting to the blades and cutters.....D N S I S+

8. Sharpening or tensioning of saw blades or cutters shall be done only by a person of demonstrated skills in this kind of work..... D N S I S+

9. Emphasis is placed upon the importance of maintaining cleanliness around woodworking machinery particularly as regards the effective functioning of guards and the prevention of fire hazards in switch enclosures, bearings and motors D N S I S+

10. Push sticks or push blocks shall be provided at the work place in the several sizes and types suitable for the work to be done..... D N S I S+

B. TABLE SAW

1. Table saw must have a guard that covers the blade, automatically adjusts to the thickness of and remains in contact with the material being cut. Furthermore, the guard shall not offer any resistance to insertion of material or to passage of the material being sawed..... D N S I S+

2. Each table saw must have a spreader to prevent the material being cut from squeezing the saw table.....D N S I S+

3. Each table saw also must have an anti-kickback device or dogs so located as to oppose the thrust or tendency of the saw to pick up the material and throw it back..... D N S I S+

C. RADIAL ARM SAW

1. Each radial saw must have an upper hood that completely encloses the upper portion of the blade, down to the end of the saw arbor. The sides of the lower, exposed portion of the blade shall be guarded to the full diameter of the blade by a device that will automatically adjust itself to the thickness of the stock being cut, in order to give maximum protection to the operator..... D N S I S+

2. On a radial arm saw used for ripping, anti-kickback fingers or dog shall be placed on both sides of the saw..... D N S I S+

3. The direction of the saw rotation shall be conspicuously marked on the hood. In addition, a permanent label not less than 1 1/2" X 3/4" shall be affixed to the rear of the guard at approximately the level of the arbor. It should read as follows: "DANGER: Do not rip or plough from this end"..... D N S I S+

D. BAND SAW

1. All portions of the saw blade shall be enclosed or guarded, except for the working portion of the blade between the bottom of the guide rolls and the table. Bands/sheets shall be fully encased The guard for the portion of the blade between the sliding guide and the upper saw-wheel guard shall protect the saw blade at the front and outer side. This portion of the guard shall be self-adjusting to raise and lower with the guide..... D N S I S+

2. Effective brakes should be provided to stop the wheel in case of blade breakage..... D N S I S+

3. Each band saw shall be provided with a tension control device to indicate the proper tension for standard blades on the machine..... D N S I S+

E. JOINTERS

1. The knives on the cutter should not project over 5/16" over the cutting head ..... D N S I S+

2. The table throat opening shall not be over 2 1/2", when tables are set or aligned with each other for zero cut..... D N S I S+

3 Each jointer shall have an automatic guard which will cover all the section of the head on the working side of the fence or gauge. The guard shall be automatically adjusted to cover the unused portion of the head and shall remain in contact with the material at all times..... D N S I S+

4 Each jointer shall have a guard which will cover the section of the head in back of the gaugefence..... D N S I S+

5. Each wood jointer with a vertical head shall have either an exhaust hood or other guard so arranged as to enclose completely the revolving head except for a slot of such width as may be necessary and convenient for the application of the material to be joined..... D N S I S+

F. DRILL PRESSES AND MORTISING MACHINES

1. Boring bits should be provided with a guard that will enclose all portions of the bit and chuck above the material being worked..... D N S I S+

2. All belts and pulleys must be guarded ..... D N S I S+

G SURFACE PLANERS

1. Surfacers or planers used in thicknessing mutiple pieces of stock simultaneously shall be provided with sectional in-feed rolls having sufficient yield in the construction of the sections to provide feeding contact pressure on the stock over the permissible range of variation in stock thickness specified for which the machine was designed..... D N S I S+

2. Where an exhaust system is used, all of the cutter heads must be covered by a metal guard, which shall form part or all of the exhaust hood..... D N S I S+

3. Feed rollers shall be guarded to prevent hands of the operator from coming in contact with them..... D N S I S+

APPENDIX H

Safety Inspection Report Forms

Safety Inspection Report

School: _____ Lab: _____ Date: _____

A. GENERAL PHYSICAL CONDITION

1. Machinery (arrangement)..... D N S I S+
2. Stairways (handrails)..... D N S I S+
3. Aisles (marked)..... D N S I S+
4. Floors (clear)..... D N S I S+
5. Windows/walls/ceilings ..... D N S I S+
6. Illumination (appropriate)..... D N S I S+
7. Temperature control..... D N S I S+
8. Ventilation..... D N S I S+
9. Fire extinguisher ..... D N S I S+
10. Exits marked..... D N S I S+
11. Fire drills..... D N S I S+
12. Locker inspection..... D N S I S+

B. GENERAL HOUSEKEEPING

1. General appearance ..... D N S I S+
2. Storage(adequate and proper). D N S I S+
3. Benches (neat & orderly)..... D N S I S+
4. Corners (clear & clean)..... D N S I S+
5. Tools & Supplies (stored)..... D N S I S+
6. Scrap storage (used?)..... D N S I S+
7. Approved oily rag storage..... D N S I S+
8. Flammable liquid storage..... D N S I S+
9. Color coded equipment..... D N S I S+
10. Mezzanine railing..... D N S I S+
11. _____ D N S I S+
12. _____ D N S I S+

C. EQUIPMENT

1. Machinery (arrangement)..... D N S I S+
2. Danger Zones marked..... D N S I S+
3. Machine tool guards..... D N S I S+
4. On/Off switches nearby..... D N S I S+
5. Machine switch locks..... D N S I S+
6. Machines in safe condition..... D N S I S+
7. Adequate supervision..... D N S I S+
8. Tools sharp and safe..... D N S I S+
9. Hoisting devices safe..... D N S I S+
10. Unattended machines off. D N S I S+

D. PERSONAL PROTECTION

1. Eye protection program..... D N S I S+
2. Sanitary eye equipment..... D N S I S+
3. Welding eye protection..... D N S I S+
4. Students dressed properly..... D N S I S+
5. Special safety clothing..... D N S I S+
6. Respirators for dust/toxicity . D N S I S+
7. Ear protection..... D N S I S+
8. _____ D N S I S+
9. _____ D N S I S+
10. _____ D N S I S+

E. ACCIDENT REPORT

1. Written procedures ?..... D N S I S+
2. Accident statistics ?..... D N S I S+
3. Accidents reported ?..... D N S I S+
4. Accident report filed ?..... D N S I S+
5. Reports/hazard elimination..... D N S I S+

F. FIRST AID

1. Qualified medical advice D N S I S+
2. Qualified staff first aid..... D N S I S+
3. Eye flushing ?..... D N S I S+
4. _____ D N S I S+
5. _____ D N S I S+

G. INSTRUCTION

1. Shop safety taught ?..... D N S I S+
2. Safety rules posted ..... D N S I S+
3. Use of safety tests..... D N S I S+
4. A/V materials used..... D N S I S+
5. Safety test records..... D N S I S+
6. Student safety committee..... D N S I S+
7. Outside speakers..... D N S I S+
8. Periodic safety inspections..... D N S I S+

H. ELECTRICAL INSTALLATION

1. Switches enclosed..... D N S I S+
2. Master control..... D N S I S+
3. Circuits identified..... D N S I S+
4. Electrical cords safe..... D N S I S+
5. No temporary wiring..... D N S I S+
6. Individual machine cut-off..... D N S I S+
7. Electrical grounds..... D N S I S+
8. Machines, magnetic control..... D N S I S+

INSPECTOR: _____

Evaluation Code

D = De Minimis, no safety relationship
N = Non-serious violation
S = Serious violation
I = Imminent danger
S+ = Satisfactory, no recommendation

Comments

Report Sheet

CODE	RECOMMENDATIONS	TYPE OF VIOLATIONS			
		I	S	N	D

APPENDIX I

Safety Test Answers

Safety Test Answers

GENERAL SAFETY (P. 21)
Multi-choice

1. C
2. B
3. A
4. B
5. D
6. A
7. C
8. D
9. D
10. D
11. C
12. A
13. D
14. B
15. C
16. A

Fill-In

1. Protection
2. Brush
3. Oily
4. Away
5. Handle
6. Permission
7. Qualified
8. Stop
9. Leave
10. Guards

BUFFER (P. 25)
Multi-choice

1. B
2. D
3. B
4. D
5. A
6. C
7. D

Fill-In

1. Goggles
2. Below
3. Wheel
4. Down
5. Center

DRILL PRESS (P. 29)
Multi-choice

1. C
2. A
3. D
4. C
5. B
6. B
7. D
8. C
9 B

Fill-In

1. Key
2. Removed

DRILL PRESS (Cont.)
Fill-In

3. Vise
4. Table
5. Drill
6. Evenly
7. Brush
8. Seized (Grabbed)

GRINDER (P 33)
Multi-choice

1. D
2. C
3. A
4. D
5. A
6. D
7. A

Fill-In

1. 1/16
2. Goggles (Safety Glasses)
3. Wheel
4. Wheel
5. Face
6. Pressure
7. Shield
8. Off

Safety Test Answers (Cont.)

PORTABLE ELECTRIC DRILL (P. 36)
Multi-Choice

1. B
2. C
3. C
4. D
5. B

Fill-In

1. Chuck
2. Sharp
3. Prevent
4. Firmly
5. Steady
6. Before
7. Connected

WELDER-OXYGEN/ ACETYLENE (P. 40)
Multi-Choice

1. C
2. D
3. C
4. A
5. D
6. C
7. B
8. A

WELDER-OXYGEN/ ACETYLENE (Cont.)
Fill-In

1. Falling
2. Oil
3. Glasses
4. Gradually
5. Friction
6. One
7. 15
8. Hot

WELDER-ELECTRIC (P. 44)
Multi-Choice

1. C
2. D
3. A
4. D
5. A

Fill-In

1. Cracked
2. Cuffs
3. Safety
4. Arc
5. Screen
6. Helmet
7. Permission
8. Teacher

METAL LATHE (P 48)
Multi-Choice

1. C
2. D
3. D
4. D
5. C
6. C
7. D

Fill-In

1. Elbows
2. Adjustments
3. Lathe
4. Touch
5. Dead
6. Heavy

BANDSAW (P. 52)
Multi-Choice

1. A
2. B
3. B
4. B
5. D
6. B
7. C
8. A
9. D

Safety Test Answers (Cont.)

BANDSAW (Cont.)
Fill-In

1. Forward
2. Flat
3. Guards
4. Teacher
5. 1/4 "
6. Blade
7. Moderate
8. Push Stick

CIRCULAR SAW (P. 56)
Multi-Choice

1. D
2. C
3. C
4. A
5. A
6. A
7. C
8. D
9. A

Fill-In

1. Knots
2. Sharp
3. Dead
4. 1/8 "
5. Guards
6. Teacher
7. Face
8. Path

JOINTER (P. 60)
Multi-Choice

1. D
2. B
3. D
4. A
5. D
6. C
7. D
8. A
9. C
10. D

Fill-In

1. 12 "
2. 1/2 "
3. Moves
4. Dead
5. Cutter
6. Slowly
7. Knives
8. Push

WOOD LATHE (P. 65)
Multi-Choice

1. A
2. C
3. D
4. B
5. C
6. D
7. C

WOOD LATHE (Cont.)

8. D
9. A
10. B

Fill-In

1. Elbows
2. Checks
3. 1/8
4. 3/8
5. Teacher
6. Turning
7. Rest
8. Stock

PLANER (SURFACER) (P. 69)
Multi-Choice

1. A
2. D
3. B
4. D
5. D
6. B
7. A
8. C
9. B
10. D

Safety Test Answers (Cont.)

PLANER (SURFACER) (Cont.)
Fill-In

1. Clean
2. Feed
3. 1/8
4. 1/16
5. Face
6. Planer
7. Feed
8. Stand by

RADIAL-ARM SAW (P. 73)
Multi-Choice

1. C
2. A
3. D
4. A
5. A
6. C
7. B
8. D

Fill-In

1. Against
2. Travel
3. Fast
4. Adjustments
5. One
6. Running
7. Position
8. Left

ROUTER (P. 77)
Multi-Choice

1. B
2. D
3. A
4. B
5. C
6. D
7. A
8. B

Fill-In

1. Held
2. Power cord
3. Off
4. Face
5. Cutter
6. Slowly

SANDER (P. 81)
Multi-Choice

1. A
2. D
3. C
4. D
5. B
6. A
7. D
8. C

SANDER (Cont.)
Fill-In

1. Vise
2. Off
3. Fingers
4. Downward
5. Feed
6. Students

SCROLL SAW (P. 85)
Multi-Choice

1. A
2. B
3. D
4. C
5. D
6. A
7. B
8. D
9. B

Fill-In

1. Close
2. Hand
3. Moderate
4. Blade
5. Down
6. Down
7. Size

Safety Test Answers (Cont.)

SHAPER (P. 89)
Multi-Choice

1. D
2. A
3. C
4. B
5. A
6. C
7. D
8. B
9. A
10. D

Fill-In

1. Teacher
2. Turns
3. Cutters
4. Push
5. Possible
6. Face
7. Guards
8. Bottom

PORTABLE CIRCULAR SAW (P. 93)
Multi-Choice

1. B
2. D
3. A
4. C
5. C
6. D
7. D
8. D
9. B

Fill-In

1. Glasses (Goggles)
2 Sharp
3. Blade
4. Blade
5. Forward
6. Reverse
7. Freely

MOTORIZED MITER BOX (P. 96)
Multi-Choice

1. B
2. C
3. D
4. C
5. A

AIR CONDITIONING
Multi-Choice

1. C
2. A
3. D

Fill-In

1. Ventilation
2 125
3. Frostbite
4. Fumes

Safety Test Answers (Cont.)

BRAKE SHOP (P 100)
Multi-Choice

1. C
2. B
3. A
4. A

Fill-In

1. On
2 Brush
3. Dust
4. Cuts

BATTERY CHARGER (P. 102)
Multi-Choice

1. D
2. C
3. A

Fill-In

1. Off
2. Positive/Negative
3. Protection
4. Flame

STORAGE BATTERIES/ ACIDS (P. 105)
Multi-Choice

1. C
2. B
3. A
4. D

Fill-In

1. Ground
2. Sulfuric
3. Carrier
4. Last
5. Tools
6. Spark

CAR LIFTS, HOISTS AND CRANES (P. 107)
Multi-Choice

1. B
2. D
3 B
4. D
5. A
6. B
7. A

CAR LIFTS, HOISTS AND CRANES (Cont.)
Fill-In

1. Teacher
2. Wood Blocks
3. Glasses (Goggles)
4. Teacher

ENGINE AND TUNEUP (P. 109)
Multi-Choice

1. D
2. D
3. A
4. C
5. D
6. D
7. B
8. A
9. D
10. B
11. D

Safety Test Answers (Cont.)

ENGINE AND TUNEUP (Cont.)
Fill-In

1. Outside
2. Pulleys
3. Extinguisher
4. Manifolds
5. Into
6. Hazard
7. Permission

FLAMMABLE LIQUIDS (P. 112)
Multi-Choice

1. B
2. D
3. D
4. D
5 A
6. B

Fill-In

1. Fireproof
2. Explosive
3. Container
4. Combustible
5. Cleaning
6. Liquid
7. Flammable

HOT TANK (P. 114)
Multi-Choice

1. B
2. A
3. C
4. A
5. A
6. A
7. A

Fill-In

1. Hands
2. Rubber
3. Chain
4 Off

HYDRAULIC PRESS (P. 116)
Multi-Choice

1. B
2. A
3. B
4. C

Fill-In

1. Pressure
2. Teacher
3. Light
4. Glasses (Goggles)

SMALL PARTS SOLVENT TANK (P. 118)
Multi-Choice

1. A
2. C
3. C

Fill-In

1 Flame
2 Drain
3 Splash
4. Eyes

CIRCUITS (P. 122)
Multi-Choice

1. A
2. A
3. C
4. B
5. A

ELECTRICAL EQUIPMENT (P. 124)
Multi-Choice

1. D
2. A

Safety Test Answers (Cont.)

ELECTRONIC DEVICES (P. 126)
Multi-Choice

1 B

2. A

3 B

4. D

CONSTRUCTION ELECTRICITY (P. 128)
Multi-Choice

1. B

2. B

3. D

4. D

5. C

6. D

Fill-In

1. Safety Glasses (Goggles)

2. Machines

3. Electrical

4. Electric

5. Dangerous

KITCHEN (P. 132)
Multi-Choice

1. B

2. A

3. D

4. A

5. C

6. D

7. D

8. B

9. A

10. A

11. D

12 A

Fill-In

1. Aisles

2 Clean

3. Proper

4. Handles

5. Trip

6. Grab (Reach)

7. Back

8. Away

SEWING ROOM (P. 135)
Fill-In

1. Sharp

2. Puncture wound

3. Exposed

4. Unstable, Knocked

5. Caddy

6. Arms, Legs

7. Clutter, Scrap

8. Positioned

9. Respect

10. Sharp, Put Away

HOME (P. 137)
Multi-Choice

1. D

2 D

3. C

4. D

5. D

6. C

7. D

8. C

9. C

10. D

Safety Test Answers (Cont.)

HOME (Cont.)
Fill-In

1. Unplug
2. Pulling
3. Overload
4. Hazards
5. Shock
6 Children

OFFICE (P. 140)
Fill-In

1. Plug
2. Fingers
3. Help
4. Arms, Legs
5. Pocket
6. Manufacturers
7. Teacher
8. Paper
9. Staples
10. Machine, Substance

CHAIN SAW (P. 142)
Multi-Choice

1 C
2. B
3. C
4. D

CHAIN SAW (Cont.)
Fill-In

1. Safety hat, Goggles, Shoes
2. Hand
3. Safe exit
4. Springback

FIREARMS (P. 142)
Multi-Choice

1. D
2. C
3. A
4 D
5. B

Fill-In

1. Shoot
2. Hit
3. Alcohol
4. Loaded
5. Unloading

SMALL BOAT (P. 147)
Multi-Choice

1. C
2. D
3. C
4. B
5. C

SMALL BOAT (Cont.)
Fill-In

1. Where
2. Motor
3. P.F.D.
4. Children
5. Seated

GRAPHIC ARTS (P. 150)
Multi-Choice

1. D
2. C
3. B
4 D
5. C

Fill-In

1. Goggles, (Glasses)
2. Chemicals
3. Gloves
4. Electric
5. Electric
6. Cutting
7. Cleaning

Safety Test Answers (Cont.)

LASERS (P. 152)
True/False

1. T
2 T
3. T
4. T
5. T

ROBOTS (P. 154)
True/False

1. T
2. F
3. T
4. T

COMPUTER ASSISTED DRAFTING (CAD) (P. 156)
True/False

1. T
2. F
3. T
4. T

APPENDIX J

Resources

Resources

Agency for Instructional Television Newsletter, Winter 1984, Agency for Instructional Television, Box A, Bloomington, Indiana - 47402

Developing Shop Safety Skills, American Association for Vocational Instructional Materials, 120 Engineering Center, Athens, Georgia - 30602

The Digest of General Industry Safety and Health Standards, Alaska Department of Labor, Division of Occupational Safety and Health

Electrical - Occupational Safety and Health Standards, Alaska Department of Labor, Division of Labor Standards and Safety, P.O Box 1149, Juneau, AK - 99802 - 1149

Hazard Communication - Occupational Safety and Health Standards, Alaska Department of Labor, Division of Labor Standards and Safety, P.O. Box 1149, Juneau, AK - 99802 -1149

How to Use Hand and Power Tools, Popular Science Publishing Co , Inc , Harper & Row, New York

Industrial Education Safety Instruction Manual, Anchorage School District, 4600 DeBarr Rd , Pouch 6-614, Anchorage, AK - 99502

Let's Work Safely, Linmore Publishing, Inc , P O. Box 1545, Palatine, IL - 60078

New Jersey Industrial Arts Education Safety Guide, New Jersey Department of Education, Division of Vocational Education and Career Preparation.

Occupational and Industrial Structures - Occupational Safety and Health Standards, Alaska Department of Labor, Division of Labor Standards and Safety, P.O Box 1149, Juneau, AK - 99802 - 1149

Pennsylvania Industrial Arts/Technology Education Safety Guide, Pennsylvania Department of Education, 333 Market St., Harrisburg, PA - 17126 - 0333

Safety Guide for Vocational, Trade and Industrial and Technology Education, Trade and Industrial Section, Division of Vocational, Technical and Adult Education Services of the Office of the State Superintendent, Old Capitol Building, FG - 11, Olympia, WA - 98504

Speaking of Safety, The Laboratory Safety Workshop Newsletter, Spring 1989, Laboratory Safety Workshop, Curry College, Milton< MA - 02186

Vocational Education Safety Instruction Manual, Lower Kuskokwim School District, P O Box 305, Bethel, AK - 99559

Resources (cont.)

AccidentPrevention Manual for Industrial Operations. 7th ed., 1974, National Safety Council, Chicago, Illinois - 60611

Modern School Shop Planning. 1967, Prakken Publications, Ann Arbor, Michigan - 48107

Health and Safety Guide - Automotive Parts Recyclers. July, 1976, U. S. Department of Health and Human Services, National Institute for Occupational Safety and Health

Occupational Safety and Health in Vocational Education. February, 1979, U S. Department of Health and Human Services, National Institute for Occupational Safety and Health

Planning Layout and Arrangement for Safety. Bulletin 289, 1967, U. S. Department of Labor, Bureau of Labor Standards

END

U.S. Dept. of Education

Office of Educational
Research and Improvement (OERI)

ERIC

Date Filmed
July 17, 1991