DOCUMENT RESUME

ED 274 789 CE 045 125

| | |
|---|---|
| AUTHOR | Reneau, Fred; And Others |
| TITLE | Computer Equipment Repair Curriculum Guide. |
| INSTITUTION | Illinois State Board of Education, Springfield. Dept. of Adult, Vocational and Technical Education.; Southern Illinois Univ., Carbondale. Dept. of Vocational Education Studies.; Vocational Technical Education Consortium of States, Atlanta, Ga. |
| PUB DATE | 86 |
| NOTE | 711p.; For a related test item bank, see CE 045 126. |
| PUB TYPE | Guides - Classroom Use - Guides (For Teachers) (052) |
| EDRS PRICE | MF04/PC29 Plus Postage. |
| DESCRIPTORS | Behavioral Objectives; Business Administration; Business Skills; Check Lists; Competency Based Education; *Computers; Computer Software; Electrical Occupations; *Electronic Equipment; *Equipment Maintenance; Learning Activities; Lesson Plans; *Machine Repairers; Secondary Education; Small Businesses; *Technical Education; Worksheets |
| IDENTIFIERS | *Customer Services; Vocational Technical Education Consortium States |

ABSTRACT

This guide is intended for use in a course to train students to repair computer equipment and perform related administrative and customer service tasks. Addressed in the individual units are the following topics (with selected subtopics in brackets): performing administrative functions (preparing service bills, maintaining accounts and labor records, training new employees, maintaining inventories, and calculating costs); maintaining customer service (answering and troubleshooting customer questions and demonstrating computer hardware and software); installing computer equipment (determining customer requirements, designing system layouts, transporting equipment, testing installations, and demonstrating systems on site); evaluating diagnostics (conducting various board, card, and line tests and interpreting diagnostic flowcharts); maintaining computer equipment (cleaning, lubricating, adjusting, and setting various components); and servicing computer equipment (interpreting various charts and schematics, installing and repairing various hardware, performing operator duties, and making adjustments). Each unit contains some or all of the following: a guide sheet consisting of a duty statement, performance and enabling objectives, a list of resources, teaching activities, criterion-referenced measures, and performance guides; visual aids; student worksheets and answers; and checklists. Appendixes include a cross-referenced list of tasks and job titles, definitions, a list of necessary tools and equipment, and a 53-item bibliography. (MN)

IL861334

ED274789

# Computer Equipment Repair

## Curriculum Guide



CE045125

VTECS

VOCATIONAL—TECHNICAL EDUCATION CONSORTIUM OF STATES

# V-TECS GUIDE

# FOR

# COMPUTER EQUIPMENT REPAIR

Prepared by

Fred Reneau, Project Director
David Hahn, Research Specialist
Heidi Perreault, Co-Director
Rebecca McKee, Research Assistant
Kate Bergerhouse, Research Assistant
Department of Vocational Education Studies
Southern Illinois University
Carbondale, IL 62901

In cooperation with

Peggy Pool, Technical Coordinator
Department of Adult, Vocational and Technical Education
Illinois State Board of Education
Springfield, IL 62777

1986

## ACKNOWLEDGEMENTS

The Computer Equipment Repair Guide was developed with the help of computer equipment repairers and educators in Illinois.

V-TECS Technical Coordinator
Peggy Pool
Department of Adult, Vocational and Technical Education
Illinois State Board of Education
Springfield, IL 62777

V-TECS Director
Ronald McCage
Vocational-Technical Education Consortium of States
795 Peachtree St. NE
Atlanta, GA 30365

### CER Incumbents

Bruce Grither
Electronic Field Engineer
Burroughs Corporation
Marion, IL 62959

Tom Green
Electronic Technician
TRI-EX Office Equipment
Carbondale, IL 62901

Duff Cooper
Electronic Sales & Service Technician
Data Bank Computer Systems
12 North Division
DuQuoin, IL 62832

Larry Denston
Electronic Field Engineer
Midwestern Services, Ltd.
520 South McKinley
Harrisburg, IL 62946

Bob Ahne
Electronic Field Engineer
TRI-EX Office Equipment
303 Birchland
Carbondale, IL 62901

Dave Pinion
Electronic Sales & Service Technician
ProComputers
Highway 13 East
Carbondale, IL 62901

Rodney Long
Electronic Sales & Service Technician
4315 East State Street
Rockford, IL 61108

Ivo Vogt
Electronic Field Engineer
TRI-EX Office Equipment
Carbondale, IL

CER Instructors

Jack Hall
Computer Equipment
Repair Instructor
Vienna Correctional Center
Dixon Springs, IL 62295

Don Bainter
Computer Equipment
Repair Instructor
Black Hawk College
Kewanee, IL 61443

Ray Pryor
Computer Equipment
Repair Instructor
506 South Wabash Ave.
Chicago, IL 60605

James King
Computer Service
Technician Instructor
Joliet Jr. College
1216 Houbolt Ave.
Joliet, IL 60436

Larry Zikmund
Computer Service
Technician Instructor
Jo Daviess--Carroll AVC
P.O. Box K
Elizabeth, IL 61028

Robert Laursen
Electronics Instructor
Parkland College
2400 W. Bradley
Champaign, IL 61821

John Alexander
Computer Service
Technician Instructor
Sauk Area Career Center
138 Crawford
Robbins, IL 60472

Rick Burgess
Computer Service Instructor
Lewis and Clark Community College
5800 Godfrey Road
Godfrey, IL 62035

Clifford Haddick
Electronics Instructor
Beck Vocational Center
Red Bud, IL 62278

Ron Gerald
Electronics Instructor
Decatur Area
Vocational Center
300 East Eldorado
Decatur, IL 62523

Mike Rybinski
Computer Service
Technician Instructor
DAVEA Center
301 North Swift Road
Addison, IL 60101

Leo Mott
Computer Equipment
Repair Instructor
Quincy Area
Vocational Center
219 Baldwin Drive
Quincy, IL 62301

John Fidler
Computer Service
Technician Instructor
Kishwaukee College
P.O. Box 29
Malta, IL 60150

William Hollenbeck
Computer Repair Instr.
Lincolnland Area
Vocational Center
Primm Road
Lincoln, IL 62656

Joe Albin
Computer Service
Technician Instructor
Lakeland College
Route #45 South
Mattoon, IL 61938

TABLE OF CONTENTS

INSTALLING COMPUTER EQUIPMENT



EVALUATING DIAGNOSTICS



MAINTAINING COMPUTER EQUIPMENT



SERVICING COMPUTER EQUIPMENT

# INTRODUCTION

Simply, V-TECS guides are extensions of the V-TECS catalog. While the V-TECS catalogs compile duties, task performance objectives, and performance guides, the catalogs emphasize the psychomotor aspect of an occupation. In addition, V-TECS catalogs establish blueprints of the occupations, while V-TECS guides consider background information surrounding the tasks as well as the process of making inferences, generalizations, and decisions. V-TECS guides take these aspects of the learning process in consideration, and go a step further by including job seeking skills, work attitudes, energy conservation practices, and safety.

Experience has shown that the art of learning can also be taught while teaching subject matter. Studies indicate that people need to learn how to learn. V-TECS guides are written to deal with this learning process as an efficient means of assisting instructors in the task of teaching.

V-TECS guides are centered around all three domains of learning: psychomotor, cognitive, and affective. The following is a brief explanation of each of these learning domains.

## PSYCHOMOTOR

V-TECS guides are developed around the psychomotor tasks that are considered worker oriented. Psychomotor or manipulative skills such as tightening a nut, replacing a hubcap, or machining a key slot in a steel shaft, are

identified in the V-TECS catalog, but the suggestions on how to learn to do these tasks are addressed in the V-TECS guides.

COGNITIVE

To perform psychomotor tasks, students must think. To tighten a nut they must know which way to turn it and when to stop turning it so that they won't strip the threads. If replacing a hubcap, there is a certain technique that may vary from one car to another. For example, start the hubcap by placing the cap in a tilted position and tapping it all the way around until it is seated. On a different model, it may be necessary to position the hubcap and snap it all at once. At any rate, students must think about what is being done. This is cognition or a mental activity. Cognition defined, what goes on in the mind about any job being done. V-TECS guide provide both the collateral knowledge and the impetus to apply cognition to psychomotor tasks.

Students gain cognition through both real and vicarious experiences. They may read, view tapes, memorize or practice a process or procedure until they are certain of it. To test their knowledge, students may be required to decide the procedure, method, or sequence for performance. This is decision making or cognitive activity in its highest form.

Cognition is that process by which information is stored and used. The voice that warns one of potential dangers, is cognition. It is cognition that tells one to lock and tag out the power supply to an electrical apparatus before

starting to repair it. However, cognition does not apply only to safety. Good cognition, or thinking, can help employees do a job better and quicker. V-TECS guides provide for the cognitive aspects of learning.

AFFECTIVE

Curriculum writers, supervisors, and instructors often fail to assist students in acquiring a positive attitude toward themselves, their job, school or fellow students. V-TECS guides seek to provide assistance to the instructor in achieving positive attitudes. It is difficult for the instructor to identify little bits and pieces of desirable behavior for every unit and often harder yet to teach them. In this area, students might be judged on how well they clean up their work area, whether they showed up to do the job in time, or whether they must be told several times to do something. Potential employers are interested in student attitudes because attitudes directly reflect upon work habits.

A student's ability to succeed on the job depends largely on attitude. If, for example, students have the attitude: "Let someone else do it," they could be in trouble. Realizing this, V-TECS guides include activities designed to help the student get along with others.

## USE OF V-TECS GUIDE

The guides are designed to provide job-relevant tasks, performance objectives, performance guides, resources, learning activities, evaluation standards and achievement testing in selected occupations.

A V-TECS guide is designed to be used with any teaching methods. If a lecture/demonstration method is best for you, you will find sufficient help to meet your needs. If, however, you prefer to use discussions or other methods that require student participation, the V-TECS guides can save preparation time and offer innovative methods and procedures. Further, this work takes into consideration students' attitudes, thinking skills, and mathematical reading skills.

The use of small groups in teaching can be helpful in a number of ways: (1) many students may feel inadequate due to their lack of background information in mechanical areas; (2) some may feel that they are physically incompetent or lack the necessary background experiences. A successful program can provide students with a sense of security by reinforcing positive attitudes while improving their skills and knowledge. The task/learner-centered approach can be achieved by allowing students to interact on a personal level. Confidence increases when students discover that they are an essential part of a team engaged in the learning-teaching process. Students learning to work without direct supervision, permits the instructor to vary instructional routines away from the lecture or other full-class methods.

The V-TECS guides provide suggestions for specific classroom activities. These activities are not meant to be restrictive but a suggested variety of learning activities for each task statement. Students may complete any or all parts of the activities.

CURRICULUM GUIDES

GUIDE SHEET

DUTY: Performing Administrative Functions

---

PERFORMANCE OBJECTIVE #1

TASK: Prepare service bill.

STANDARD OF PERFORMANCE OF TASK:

Service bill will include a purchase order number, account number, date, customer name and address, dollar amounts, catalog equipment, unit cost, quantity, method of payment, service/product, vendor/payee information, preparer signature, and customer signature on original and duplicate copies.

SOURCE OF STANDARDS:

Writing team of incumbent workers.

CONDITIONS FOR PERFORMANCE OF TASK:

Billing receipt book
Pen/Pencil
Customer information
Parts price lists

ENABLING OBJECTIVES:

1. Identify the parts of a service bill.
2. Fill out a complete service bill.

*RESOURCES:

1. Huffman & Stewart. General Recordkeeping, Seventh Edition. Gregg Division, McGraw-Hill Book Company, New York, NY. 1976.
2. Huffman & Stewart. Activity Guide and Working Papers for General Accounting. Gregg Division McGraw-Hill Book Company, New York, NY. 1976.
3. Baron, Steinfeld, and Schultheis. Practical Record Keeping, Fifth Edition. South-Western Publishing Company, Cincinnati, OH. 1981.
4. Baron, Steinfeld, and Schultheis. Working Papers and Supplementary Items for Practical Record Keeping and Bookkeeping. South-Western Publishing Company, Cincinnati, OH. 1983.

*RESOURCES: (cont.)

5. Visual Aid - Service bill.
6. Worksheet - Service bill parts and function.
7. Worksheet - Blank service bill.
8. Mock information sheet.
9. Checklist - Service bill.

TEACHING ACTIVITIES:

1. Present lecture on parts of a service bill and their functions.(*1 & 3)
2. Instruct students to write two questions they would like answered concerning a service bill.
3. Conduct a class discussion to answer student questions about a service bill.
4. Instruct students to service bill parts and functions worksheet.(*6)
5. Demonstrate how to fill out a service bill using textbook examples as well as actual service bills. (*1,2,3,4, & 5)
6. Instruct student to fill out a service bill using the service bill worksheet & mock information sheet provided by the instructor.(*7,8 & 9)

CRITERION-REFERENCED MEASURE:

Given a blank service bill worksheet and a mock information sheet, the student will fill out the service bill including a purchase order number, account number, date, customer name and address, dollar amount, catalog/equipment number, unit cost, quanity purchased, service/product description, method of payment, vendor payee information, preparer signature, and customer signature.

PERFORMANCE GUIDE:

1. Fill in purchase order number and account number.
2. Fill in current date.
3. Record name of person, company, and address.
4. Record quantity purchased, catalog/equipment number and description, including merchandise, parts, labor, travel, and miscellaneous expenses.
5. Write dollar amount of bill to include unit cost, amount, sub total, tax, and total cost.
6. Record the purpose and method of the payment.
7. Proofread the bill.
8. Sign or initial the bill.
9. Obtain customer signature on the bill.
10. Give original copy to customer and retain duplicate copy for records.

VISUAL AID

Title: Service Bill

XYZ Company, Inc.

6666 Nowhere Ave.

Anywhere, Il 00000

SOLD TO: _____

_____

_____

Purchase Order Number _____

Account Number _____

Date _____

Service Performed: _____

| Quantity | Equipment/Catalog Number | Description | Unit Price | Amount |
|---|---|---|---|---|
| | | | | |

___ Cash ___ Charge ___ Other

| | |
|---|---|
| Sub Total | |
| % Discount | |
| Total | |
| % Tax | |
| Total Cost | |

Make Checks Payable To:

Buyer Certification
(sign in ink only)

Seller Certification
(sign in ink only)

STUDENT WORKSHEET

Student Name _____

Title: Service Bill Parts And Function Worksheet

Directions: Match the service bill part with its function.

| Service Bill Part | Part Function |
|---|---|
| ___1. Purchase Order/Invoice Number | A. Labor record information. |
| ___2. Account Number | B. Payment/Payee information. |
| ___3. Date | C. Purchaser identification. |
| ___4. Customer Name and Address | D. Sales Person identification. |
| ___5. Dollar Amount | E. Account receivable/paid information. |
| ___6. Equipment/Catalog Number | F. Inventory update information. |
| ___7. Method of Payment | G. Item purchased/serviced identification. |
| ___8. Preparers Signature | H. Total billing charge information. |
| ___9. Vendor/Payee Information | I. Billing & Shipping information. |
| ___10. Service Performed | J. Time of purchase information. |
| ___11. Description | K. Purchaser's billing identification. |
| ___12. Unit Cost | L. Order identification information. |
| | M. Number purchased or serviced. |
| | N. Item/service cost. |

STUDENT WORKSHEET ANSWERS

1. - L
2. - K
3. - J
4. - I
5. - H
6. - F
7. - E
8. - D
9. - B
10.- A
11.- G
12.- N

MOCK INFORMATION FOR STUDENT WORKSHEET

On 8/17/85 John Henry, Electronic Sales and Service Technician for the XYZ Company, Inc., 6666 Nowhere Ave., Anywhere, IL 00000 completed a memory board upgrade on a disk drive unit belonging to the ABC Company , 606 Main Blvd., Everywhere, IL 00000. Jane Doe, an employee of ABC Company arrived at XYZ to pick up the disk drive and purchase 100 floppy disks, catalog # D761146, at a cost of $1.24 per disk. Jane indicates that the floppy disk purchase and the upgrade cost was to be charged to account number C-764 and reminds John that their organization is eligible for a 10% discount and 6% sales tax. John explains to Jane that the upgrade required two hours of labor (#UL 1541) at $50.00 per hour and a new memory board (#MB 179) which costs $179.66. John's previous service bill was P.O. #776. Use the information above to complete the blank service bill.

STUDENT WORKSHEET

Student Name_____

Title: Service Bill Worksheet

Directions: Using the mock information sheet provided fill out the service bill.

XYZ Company, Inc.

6666 Nowhere Ave.

Anywhere, Il 00000

SOLD TO: _____ Purchase Order Number _____

_____ Account Number _____

_____ Date _____

Service Performed: _____

| Quantity | Equipment/Catalog Number | Description | Unit Price | Amount |
|---|---|---|---|---|
| | | | | |

___ Cash ___ Charge ___ Other

| | |
|---|---|
| Sub Total | |
| % Discount | |
| Total | |
| % Tax | |
| Total Cost | |

Make Checks Payable To:

_____
Buyer Certification
(sign in ink only)

_____
Seller Certification
(sign in ink only)

STUDENT WORKSHEET ANSWERS

XYZ Company, Inc.
6666 Nowhere Ave.
Anywhere, Il 00000

SOLD TO: Jane Doe - ABC Company, Inc.
606 Main Blvd.
Everywhere, Il 00000

Purchase Order Number 777
Account Number C-764
Date 08/17/86

Service Performed: Disk drive memory upgrade + diskette purchase.

| Quantity | Equipment/Catalog Number | Description | Unit Price | Amount |
|---|---|---|---|---|
| 100 | D 761146 | Floppy Disk | 1.24 ea. | 124.00 |
| 2 hrs. | UL 1541 | Upgrade Labor | 50.00/hr | 100.00 |
| 1 | MB 179 | Memory Board | 179.00 | 179.00 |

___ Cash X Charge ___ Other

| | |
|---|---|
| Sub Total | 403.00 |
| % Discount | 40.30 |
| Total | 362.70 |
| % Tax | 21.76 |
| Total Cost | 384.46 |

Make Checks Payable To: XYZ Company, Inc.

Jane Doe
Buyer Certification
(sign in ink only)

John Henry
Seller Certification
(sign in ink only)

CHECKLIST

DUTY Performing Administrative Functions

TASK Prepare service bill.

ENABLER Fill out a complete service bill.

STUDENT'S NAME _____ DATE _____

EVALUATOR'S NAME _____ COURSE _____

TIME : STARTED _____ COMPLETED _____

TOTAL _____

DIRECTIONS TO THE EVALUATOR:

Use the following checklist to evaluate service bill worksheet.

| PERFORMANCE DETERMINANTS | YES | NO |
|---|---|---|
| The preparer | | |
| - Identified the P.O. number. | ____ | ____ |
| - Identified the account number. | ____ | ____ |
| - Marked the date. | ____ | ____ |
| - Identified the customer's name and address. | ____ | ____ |
| - Calculated the dollar amount. | ____ | ____ |
| - Indicated the dollar amount. | ____ | ____ |
| - Identified the catalog/equipment number. | ____ | ____ |
| - Indicated the method of payment. | ____ | ____ |
| - Obtained the buyer's signature. | ____ | ____ |
| - Secured the seller's signature. | ____ | ____ |
| - Made sure the signatures were in ink. | ____ | ____ |
| - Identified the vendor/payee information. | ____ | ____ |
| - Proofread the bill before signing it. | ____ | ____ |

GUIDE SHEET

DUTY: Performing Administrative Functions

---

PERFORMANCE OBJECTIVE #2

TASK: Maintain accounts receivable/paid records.

STANDARD OF PERFORMANCE OF TASK:

Account receivable/paid records will include customer name, account number, money owed, money paid, and current account balance.

SOURCE OF STANDARD:

Writing team of incumbent workers.

CONDITIONS FOR PERFORMANCE OF TASK:

Accounts receivable information
Accounts receivable/paid forms

| | |
|---|---|
| Pen/pencil | Disk drive |
| Labels | Monitor |
| File folders | Printer |
| File cabinet | Disk storage cabinet |
| Disks | Central processing unit |

ENABLING OBJECTIVES:

1. Complete a sales journal.
2. Complete a cash receipts journal.
3. Complete an accounts receivable ledger.

*RESOURCES:

1. Huffman & Stewart. General Recordkeeping, Seventh Edition. Gregg Division, McGraw-Hill Book Company, New York, NY, 1976.
2. Huffman & Stewart. Activity Guide and Working Papers for General Accounting. Gregg Division, McGraw-Hill Book Company, New York, NY, 1976.
3. Baron, Steinfeld, & Schultheis. Practical Record Keeping, Fifth Edition. South-Western Publishing Company, Cincinnati, OH, 1981.
4. Baron, Steinfeld, & Schultheis, Working Papers and Supplementary Items for Practical Record Keeping and Bookkeeping. South-Western Publishing Company, Cincinnati, OH, 1983.

*RESOURCES: (cont.)

5. Visual Aids - Sales journal, cash receipts journal, and accounts receivable ledger.
6. Worksheet - Sales journal, cash receipts journal, and accounts receivable ledger.
7. Mock information sheet.
8. Checklist - Complete a sales journal, cash receipts journal and accounts receivable ledger.

TEACHING ACTIVITIES:

1. Present lecture on keeping accounts receivable records, (sales journal, cash receipts journal, and accounts receivable ledger). (*1 & 3)
2. Conduct class discussion on keeping accounts receivable records.
3. Demonstrate how to fill out a sales journal. (*2, 4, & 5)
4. Demonstrate how to fill out a cash receipts journal. (*2, 4, & 5)
5. Demonstrate how to fill out an accounts receivable ledger. (*2, 4, & 5)
6. Instruct students to complete a sales journal, cash receipts journal, and accounts receivable ledger using the mock information sheet provided by the instructor. (*6 & 7)

CRITERION-REFERENCED MEASURE:

Given blank sales journal, cash receipts journal, and accounts receivable ledger worksheets and a mock information sheet, the student will complete a sales journal, cash receipts journal, and accounts receivable ledger including a date, customer name and address, invoice #, charge description, accounts receivable, sales discount, total amount, item, post, ref., debit, credit and balance.

PERFORMANCE GUIDE:

1. Assemble needed materials.
2. Determine customer's name and account number.
3. Find customer's file
4. Record amount owed for each job performed.
5. Record amount paid on account.
6. Determine remaining account balance.
7. Determine when next payment is due.
8. Store updated file in a dry, dust free place.

VISUAL AID

Title: Sales Journal

| SALES JOURNAL | | | | | | PAGE | |
|---|---|---|---|---|---|---|---|
| | DATE | | CUSTOMER NAME | INVOICE NUMBER | POSTED REFERENCE | AMOUNT | |
| 1 | | | | | | | 1 |
| 2 | | | | | | | 2 |
| 3 | | | | | | | 3 |
| 4 | | | | | | | 4 |
| 5 | | | | | | | 5 |
| 6 | | | | | | | 6 |
| 7 | | | | | | | 7 |
| 8 | | | | | | | 8 |

VISUAL AID

Title: Cash Receipts Journal

| CASH RECEIPTS JOURNAL | | | | | | | | | | PAGE |
|---|---|---|---|---|---|---|---|---|---|---|
| | DATE | | RECEIVED FROM | FOR | POSTED REFERENCE | ACCOUNTS RECEIVABLE | SALES DISCOUNT | CASH | BANK DEPOSITS | |
| 1 | | | | | | | | | | 1 |
| 2 | | | | | | | | | | 2 |
| 3 | | | | | | | | | | 3 |
| 4 | | | | | | | | | | 4 |
| 5 | | | | | | | | | | 5 |
| 6 | | | | | | | | | | 6 |
| 7 | | | | | | | | | | 7 |
| 8 | | | | | | | | | | 8 |

VISUAL AID

Title: Accounts Receivable Ledger

ACCOUNTS RECEIVABLE LEDGER PAGE

NAME TERMS

ADDRESS

| | DATE | | ITEM | POSTED REFERENCE | DEBIT | CREDIT | BALANCE | |
|---|---|---|---|---|---|---|---|---|
| 1 | | | | | | | | 1 |
| 2 | | | | | | | | 2 |
| 3 | | | | | | | | 3 |
| 4 | | | | | | | | 4 |
| 5 | | | | | | | | 5 |

MOCK INFORMATION FOR STUDENT WORKSHEET

Use the sales journal and cash receipts journal to record the following transactions. After you have recorded all the transactions, immediately post each customer's account to an accounts receivable page. Number the sales journal page 63 and the cash receipts journal page 96. Terms for all transactions are a 2% discount on any invoice total paid within 10 days (2/10) and the total balance of any invoice due within 30 days of purchase (n/30).

| | |
|---|---|
| July 2 | Memory board upgrade and diskettes sold to ABC Company, Inc. for $385.10 (invoice 777). |
| July 2 | Received check # 114 for $200.00 from ABC Company, Inc. to be applied on account. |
| July 3 | Sold memoryboard and software to James & Sons, Inc. for $250.00. |
| July 4 | Sold a 64 K computer system to Lighthouse, Inc. for $952.56. |
| July 10 | Received check # 1118 from James & Sons, Inc. for full payment on invoice dated 7/3/85. |
| July 10 | Deposited cash received from July 1 to date. |
| July 19 | Sold spread sheet software to Lighthouse, Inc. for $215.00. |
| July 22 | Received check # 0041 for $500.00 from Lighthouse, Inc. to be applied on account. |
| July 22 | Troubleshoot CPU and replace integrated circuit chip #L651Z for James & Sons, Inc. for $93.98. |
| July 22 | Deposited the cash received from 7/10 to date. |
| July 25 | Realigned disk drive for James & Sons, Inc. for $70.75. |
| July 26 | Received check #00123 from Lighthouse, Inc. for $500.00 to be applied on account. |
| July 28 | Constructed a printer interface cable for ABC Company for $36.00. |
| July 30 | Received check #00211 for $167.58 from Lighthouse, Inc. for balance on account. |

MOCK INFORMATION SHEET: (cont.)

July 31 Received check #2006 for $100.00 from James & Sons, Inc. to be applied on account.

July 31 Received check #286 for $200.00 from ABC Company, Inc. to be applied on account.

July 31 Deposited cash received from 7/22 to date.

STUDENT WORKSHEET

Student Name_____

Title: Sales Journal Worksheet

Directions: Using the mock information sheet provided fill out the sales journal.

| SALES JOURNAL | | | | | | PAGE | |
|---|---|---|---|---|---|---|---|
| | DATE | | CUSTOMER NAME | INVOICE NUMBER | POSTED REFERENCE | AMOUNT | |
| 1 | | | | | | | 1 |
| 2 | | | | | | | 2 |
| 3 | | | | | | | 3 |
| 4 | | | | | | | 4 |
| 5 | | | | | | | 5 |
| 6 | | | | | | | 6 |
| 7 | | | | | | | 7 |
| 8 | | | | | | | 8 |

STUDENT WORKSHEET

Student Name_____

Title: Cash Receipts Journal Worksheet

Directions: Using the mock information sheet provided fill out the cash receipts journal.

| CASH RECEIPTS JOURNAL | | | | | | | | | PAGE | |
|---|---|---|---|---|---|---|---|---|---|---|
| | DATE | | RECEIVED FROM | FOR | POSTED REFERENCE | ACCOUNTS RECEIVABLE | SALES DISCOUNT | CASH | BANK DEPOSITS | |
| 1 | | | | | | | | | | 1 |
| 2 | | | | | | | | | | 2 |
| 3 | | | | | | | | | | 3 |
| 4 | | | | | | | | | | 4 |
| 5 | | | | | | | | | | 5 |
| 6 | | | | | | | | | | 6 |
| 7 | | | | | | | | | | 7 |
| 8 | | | | | | | | | | 8 |

STUDENT WORKSHEET

Student Name_____

Title: Accounts Receivable Ledger Worksheet

Directions: Using the mock information sheet provided fill out the accounts receivable ledger.

ACCOUNTS RECEIVABLE LEDGER PAGE

NAME TERMS

ADDRESS

| | DATE | | ITEM | POSTED REFERENCE | DEBIT | CREDIT | BALANCE | |
|---|---|---|---|---|---|---|---|---|
| 1 | | | | | | | | 1 |
| 2 | | | | | | | | 2 |
| 3 | | | | | | | | 3 |
| 4 | | | | | | | | 4 |
| 5 | | | | | | | | 5 |

STUDENT WORKSHEET ANSWERS

| SALES JOURNAL | | | | | | PAGE 63 | |
|---|---|---|---|---|---|---|---|
| | DATE | | CUSTOMER NAME | INVOICE NUMBER | POSTED REFERENCE | AMOUNT | |
| 1 | JULY | 2 | ABC Company, Inc. | 777 | X | 385.10 | 1 |
| 2 | JULY | 3 | James + Sons, Inc. | 778 | X | 250.00 | 2 |
| 3 | JULY | 4 | Lighthouse, Inc. | 779 | X | 952.56 | 3 |
| 4 | JULY | 19 | Lighthouse, Inc. | 780 | X | 215.00 | 4 |
| 5 | JULY | 22 | James + Sons, Inc. | 781 | X | 93.98 | 5 |
| 6 | JULY | 25 | James + Sons, Inc. | 782 | X | 70.75 | 6 |
| 7 | JULY | 28 | ABC Company, Inc. | 783 | X | 36.00 | 7 |
| 8 | JULY | 31 | TOTAL | | | 2003.39 | 8 |

STUDENT WORKSHEET ANSWERS

CASH RECEIPTS JOURNAL PAGE 96

| | DATE | | RECEIVED FROM | FOR | POSTED REFERENCE | ACCOUNTS RECEIVABLE | SALES DISCOUNT | CASH | BANK DEPOSITS | |
|---|---|---|---|---|---|---|---|---|---|---|
| 1 | JULY | 2 | ABC Comp. | On Acct | X | 200.00 | | 200.00 | | 1 |
| 2 | JULY | 10 | James + Sons. | Inv.7/3 | X | 250.00 | 5.00 | 245.00 | 445.00 | 2 |
| 3 | JULY | 22 | Lighthouse | On Acct | X | 500.00 | | 500.00 | 500.00 | 3 |
| 4 | JULY | 26 | Lighthouse | On Acct | X | 500.00 | | 500.00 | | 4 |
| 5 | JULY | 30 | Lighthouse | On Acct | X | 167.56 | | 167.56 | | 5 |
| 6 | JULY | 31 | James + Sons. | On Acct | X | 100.00 | | 100.00 | | 6 |
| 7 | JULY | 31 | ABC Comp. | On Acct | X | 200.00 | | 200.00 | 967.56 | 7 |
| 8 | JULY | 31 | TOTAL | | | 1917.56 | 5.00 | 1912.56 | 1912.56 | 8 |

STUDENT WORKSHEET ANSWERS

ACCOUNTS RECEIVABLE LEDGER PAGE 11

NAME ABC Company, Inc. TERMS 2/10, n/30

ADDRESS 606 Main Blvd., Everywhere, Il 00000

| | DATE | | ITEM | POSTED REFERENCE | DEBIT | CREDIT | BALANCE | |
|---|---|---|---|---|---|---|---|---|
| 1 | July | 2 | Inv. 777 | S63 | 385.10 | | 385.10 | 1 |
| 2 | July | 2 | Check 114 | CR96 | | 200.00 | 185.10 | 2 |
| 3 | July | 28 | Inv.783 | S63 | 36.00 | | 221.10 | 3 |
| 4 | July | 31 | Check 286 | CR96 | | 200.00 | 21.10 | 4 |
| | | | | | | | | 5 |

ACCOUNTS RECEIVABLE LEDGER PAGE 12

NAME Lighthouse, Inc. TERMS 2/10, n/30

ADDRESS 7714 Easy West Ave., Everywhere, Il 00000

| | DATE | | ITEM | POSTED REFERENCE | DEBIT | CREDIT | BALANCE | |
|---|---|---|---|---|---|---|---|---|
| 1 | July | 4 | Inv. 779 | S63 | 952.56 | | 952.56 | 1 |
| 2 | July | 19 | Inv. 780 | S63 | 215.00 | | 1167.56 | 2 |
| 3 | July | 22 | Check 0041 | CR96 | | 500.00 | 667.56 | 3 |
| 4 | July | 26 | Check 00123 | CR96 | | 500.00 | 167.56 | 4 |
| 5 | July | 30 | Check 00211 | CR96 | | 167.56 | ------ | 5 |

STUDENT WORKSHEET ANSWERS (cont.)

ACCOUNTS RECEIVABLE LEDGER PAGE 13

NAME James + Sons, Inc. TERMS 2/10, n/30

ADDRESS 53511 Double Rd., Nowhere, Il 00000

| | DATE | | ITEM | POSTED REFERENCE | DEBIT | CREDIT | BALANCE | |
|---|---|---|---|---|---|---|---|---|
| 1 | July | 3 | Inv. 778 | S63 | 250.00 | | 250.00 | 1 |
| 2 | July | 10 | Check 1118 | CR96 | | 250.00 | ------ | 2 |
| 3 | July | 22 | Inv. 781 | S63 | 93.98 | | 93.98 | 3 |
| 4 | July | 25 | Inv. 782 | S63 | 70.75 | | 164.73 | 4 |
| 5 | July | 31 | Check 20006 | CR96 | | 100.00 | 64.73 | 5 |

CHECKLIST

DUTY Performing Administrative Functions

TASK Maintaining accounts receivable/paid records.

ENABLER Complete a sales journal.

STUDENT'S NAME _____ DATE _____

EVALUATOR'S NAME _____ COURSE _____

TIME : STARTED _____ COMPLETED _____

TOTAL _____

DIRECTIONS TO THE EVALUATOR:

Use the following checklist to evaluate the sales journal worksheet.

| PERFORMANCE DETERMINANTS | YES | NO |
|---|---|---|
| The preparer | | |
| - Identified sales journal page numbers. | ____ | ____ |
| - Recored all dates of sales transactions. | ____ | ____ |
| - Recorded customer's name for all sales transactions. | ____ | ____ |
| - Recorded invoice numbers for each sales transaction. | ____ | ____ |
| - Marked post reference for each sales transaction. | ____ | ____ |
| - Recorded amounts of each sales transaction. | ____ | ____ |
| - Correctly totaled sales amount at the end of the month. | ____ | ____ |

CHECKLIST

DUTY Performing Administrative Functions

TASK Maintaining accounts receivable/paid records.

ENABLER Complete a cash receipts journal.

STUDENT'S NAME _____ DATE _____

EVALUATOR'S NAME _____ COURSE _____

TIME : STARTED _____ COMPLETED _____

TOTAL _____

DIRECTIONS TO THE EVALUATOR:

Use the following checklist to evaluate the cash receipts journal worksheet.

| PERFORMANCE DETERMINANTS | YES | NO |
|---|---|---|
| The preparer | | |
| - Identified cash receipts journal page numbers. | ____ | ____ |
| - Recorded dates of all the cash transactions. | ____ | ____ |
| - Recorded purpose of each cash transaction. | ____ | ____ |
| - Recorded accounts receivable amount for each cash transaction. | ____ | ____ |
| - Marked post reference for each cash transaction. | ____ | ____ |
| - Calculated and recorded sales discounts. | ____ | ____ |
| - Recorded cash amounts of all transactions. | ____ | ____ |
| - Recorded bank deposits. | ____ | ____ |
| - Correctly totaled accounts receivable, sales discounts, cash, and bank deposits at the end of the month. | ____ | ____ |

CHECKLIST

DUTY Performing Administrative Functions

TASK Maintaining accounts receivable/paid records.

ENABLER Complete an accounts receivable ledger.

STUDENT'S NAME _____ DATE _____

EVALUATOR'S NAME _____ COURSE _____

TIME : STARTED _____ COMPLETED _____

TOTAL _____

DIRECTIONS TO THE EVALUATOR:

Use the following checklist to evaluate the accounts receivable ledger worksheet.

| PERFORMANCE DETERMINANTS | YES | NO |
|---|---|---|
| The preparer | | |
| - Completed separate ledger sheets for each account. | ____ | ____ |
| - Recorded company name and address on each ledger. | ____ | ____ |
| - Recorded terms of payment for each account. | ____ | ____ |
| - Recorded each transaction date. | ____ | ____ |
| - Recorded purpose/item for each transaction. | ____ | ____ |
| - Recored post reference with the corresponding sales or cash journal page. | ____ | ____ |
| - Entered debits and credits. | ____ | ____ |
| - Calculated account balance. | ____ | ____ |
| - Recored amount due at the end of the month. | ____ | ____ |
| - Calculated correctly. | ____ | ____ |

GUIDE SHEET

DUTY: Performing Administrative Functions

---

PERFORMANCE OBJECTIVE #3

TASK: Perform public relations activities.

STANDARD OF PERFORMANCE OF TASK:

Customer satisfaction will be maintained by keeping them informed about specials, new products, existing product updates, price changes, maintenance tips, general information and by standing behind the product.

SOURCE OF STANDARD:

Writing team of incumbent workers.

CONDITIONS FOR PERFORMANCE OF TASK:

| | |
|---|---|
| Specials' bulletins | Newsletter |
| Display materials | Informational brochures |
| Mailing lists | Central processing unit |
| Typewriter | Disk drive |
| Pen/Pencil | Monitor |
| File folders | Printer |
| File cabinet | Disks |
| Labels | Disk cabinet |

ENABLING OBJECTIVES:

1. Identify different methods of promoting public relations.
2. Maintain a mailing list.

*RESOURCES:

1. Guest speaker from a computer equipment repair business.
2. Examples of public relations materials. (Obtain from local computer equipment repair business.)
3. Public relations materials worksheet.
4. Checklist - Public relations activities.

TEACHING ACTIVITIES:

1. Lecture/discussion on methods, purposes, and effectiveness of public relation activities. (#1)

TEACHING ACTIVITIES: (cont.)

2. Present actual public relations materials for student inspection. (#2)
3. Discuss how a mailing list could be developed and maintained. (#1 & 2)
4. Instruct student to complete public relations material worksheet. (#3)
5. Instruct students to maintain a mock mailing list. (#2)
6. Instruct students to create a mock sales bulletin. (#2)
7. Assign students role playing parts to set up mock sales displays, and practice answering questions. (#1 & 2)

CRITERION-REFERENCED MEASURE:

Student will understand and identify the different types of public relation materials and their functions.

PERFORMANCE GUIDE:

1. Maintain up-to-date customer mailing list.
2. Maintain up-to-date prospective customer mailing list.
3. Prepare comprehensive list of services and prices.
4. Prepare specials' bulletins, informational brochures, and newsletters for distribution.
5. Make periodic mailings of sales bulletins, informational brochures and newsletters to above mailing lists.
6. Prepare informational displays in store and at shows.
7. Send a maintenance newsletter at least twice a year to the two mailing lists offering preventive maintenance techniques, tips and answers to questions commonly asked.
8. Answer customer questions in person or on the phone.

STUDENT WORKSHEET

Student Name _____

Title: Public Relations Materials Worksheet

Directions: Match the public relations material with its function.

| Public Relation Material | Material Function |
|---|---|
| ___1. Promotional Give-a-way | A. Keeps customer up-to-date on product/service cost. |
| ___2. New Product Flyers | B. Keeps customer up-to-date on any changes being made on existing products. |
| ___3. Existing Product Updates | C. Provides customer with a local place to obtain parts, repairs, and products. Allows dealers to stand behind their product or service. |
| ___4. Price Change List | D. Provides customer with tips, techniques, and answers to questions commonly asked. |
| ___5. Product Catalogs | E. Provides a means of providing public relations materials to possible future customers. |
| ___6. Specials Bulletins/Coupons | F. Introduces products/services to customers by providing free samples. |
| ___7. Maintenance Newsletter | G. Keeps customer up-to-date on current product/service line. |
| ___8. Informational Displays & Brochures | H. Provides a means of getting public relations materials to current customers. |
| ___9. Customer Mailing List | I. Provide customer with hands-on trial of products and take home information. |

STUDENT WORKSHEET (cont.)

____10. Prospective Customer Mailing List

____11. Product Sales and Service Program

J. Offers the customer savings on certain products or services.

K. Informs customer of new products and services that are available.

STUDENT WORKSHEET ANSWERS

1. - F
2. - K
3. - B
4. - A
5. - G
6. - J
7. - D
8. - I
9. - H
10. - E
11. - C

GUIDE SHEET

DUTY: Performing Administrative Functions

---

PERFORMANCE OBJECTIVE #4

TASK: Maintain labor records

STANDARD OF PERFORMANCE OF TASK:

Labor records will include service person's name, type of work performed, date work performed, equipment serial #, time spent on job, miscellaneous expenses incurred, and person or company to be charged information.

SOURCE OF STANDARD:

Writing team of incumbent workers.

CONDITIONS FOR PERFORMANCE OF TASK:

| | |
|---|---|
| Service call forms | Central processing unit |
| Labor record forms | Disk drive |
| Pen/Pencil | Monitor |
| Labels | Disk storage cabinet |

ENABLING OBJECTIVES:

1. Maintain individual daily labor record.
2. Maintain weekly labor record.

*RESOURCES:

1. Baron, Steinfeld, & Schultheis. Practical Record Keepin, Fifth Edition. South-Western Publishing Company, Cincinnati, OH. 1981.
2. Baron, Steinfeld, & Schultheis. Working Papers and Supplementary Items for Practical Record Keeping and Bookkeeping. South-Western Publishing Company, Cincinnati, OH. 1983.
3. Rosenberg, Swinney, & Van Sickle. Projects in Business Record Keeping. South-Western Publishing Company, Cincinnati, OH. 1985.
4. Visual aids - Time sheets (daily labor records, weekly labor records).
5. Mock information sheet.
6. Labor records worksheet.
7. Checklist - Labor records.

TEACHING ACTIVITIES:

1. Present lecture on the purpose and importance of good labor records. (*1, 2, & 3)
2. Conduct class discussion on importance of accurate labor records. (*1, 2, & 3)
3. Present lecture on the types of time sheets necessary to keep labor records. (*1, 2, & 3)
4. Demonstrate how to fill out a daily labor record. (*1, 2, 3, & 4)
5. Demonstrate how to fill out a weekly labor record. (1, 2, 3, & 4)
6. Instruct student to fill out a daily labor record and a weekly labor record using the mock information sheet provided by instructor. (5, 6, & 7)

CRITERION-REFERENCED MEASURE:

Given a mock information sheet, the student will fill out a daily labor record and a weekly labor record, including service person's name, work performed, date, hours worked, rate of pay, total earnings, social security number, overtime pay, total wages, equipment serial number, miscellaneous expenses, and company to be charged for labor.

PERFORMANCE GUIDE:

1. Compile daily service call forms.
2. Enter information for each service call in file:
   A. Date work performed.
   B. Type of work performed:
      1. Preventive maintenance.
      2. Equipment repair.
      3. Software troubleshooting.
      4. Operational troubleshooting.
      5. Field upgrade.
   C. Time spent on job:
      1. Traveling time.
      2. Labor time.
      3. Other.
   D. Miscellaneous expenses:
      1. Mileage.
      2. Parts.
      3. Parking/tolls.
      4. Per diem (meals).
      5. Other.
   E. Person/company to be charged:
      1. Name.
      2. Address.
      3. Phone number.
      4. Contact person.
3. Save and store file in a dry, dust free place.

VISUAL AID

Title: Daily Labor Record

## DAILY LABOR RECORD

Date _____ 19__

Customer Name + Address _____

_____

_____

Service/Work Performed _____

_____

Equipment Serial/Identification Number _____

Time In _____ Time Out _____ Total Time _____

Miscellaneous Charges:

| | Item | Cost |
|---|---|---|
| Parts | | |
| Mileage | | |
| Parking/Toll | | |
| Per Diem | | |
| Other | | |

Service Person's Signature

Customer's Signature

VISUAL AID

Title: Weekly Labor Record

## WEEKLY LABOR RECORD

Week Ending_____19__

Social Security Number_____

Employee Name_____

| Day | Regular In | Regular Out | Regular Total | Overtime In | Overtime Out | Overtime Total | Daily Total |
|---|---|---|---|---|---|---|---|
| Monday | | | | | | | |
| Tuesday | | | | | | | |
| Wednesday | | | | | | | |
| Thursday | | | | | | | |
| Friday | | | | | | | |
| Saturday | | | | | | | |
| Sunday | | | | | | | |

| Days Worked | | Total Hours | Pay Rate | Total Earnings |
|---|---|---|---|---|
| | Regular | | | |
| | Overtime | | | |
| | Total | | Gross Pay | |

MOCK INFORMATION FOR STUDENT WORKSHEET

John Henry, SSN 000-000-0001, is an electronic field engineer for the XYZ Company. Below is a listing of the labor performed by John for the week ending June 13, 19_ _. John has a paid lunch hour and receives overtime pay for any time over eight hours per day. John's regular rate of pay is $10.50 per hour and overtime rate is $12.25 per hour. Fill in the blank daily and weekly labor records.

DAILY RECORD INFORMATION

Monday, June 26 - Replaced drive belt, cleaned drive head, aligned drive head, replaced drive air filter. New drive belt costs $9.96; new air filter costs $3.45; time in 9:00 a.m., time out 12:00 p.m.; parking three hours cost $3.00. Disk drive serial number #4441241 belonging to Bill Will, Lighthouse, Inc., 1661 Northwest Dr., Anywhere, IL 00001.

Replaced printer ribbon, removed, cleaned, and lubricated print head assembly, lubricated head assemby guide rods and adjusted guide wire tension. New ribbon--$13.95; time in 1:00 p.m., time out 4:00 p.m. Printer serial number 61341 belonging to Jane Doe, ABC Company, Inc., 606 Main Blvd., Everywhere, IL 00000.

WEEKLY RECORD INFORMATION

| | Time In | Time Out |
|---|---|---|
| June 26 | 9:00 | 4:00 |
| June 27 | 8:00 | 6:00 |
| June 28 | 8:30 | 4:30 |
| June 29 | 8:00 | 5:30 |
| June 30 | 9:30 | 5:30 |

STUDENT WORKSHEET

Student Name_____

Title: Daily Labor Record Worksheet

Directions: Using the mock information sheet provided fill out the daily labor records.

DAILY LABOR RECORD

Date_____ 19__

Customer Name + Address _____

_____

_____

Service/Work Performed _____

_____

Equipment Serial/Identification Number _____

Time In _____ Time Out_____ Total Time _____

Miscellaneous Charges:

| | Item | Cost |
|---|---|---|
| Parts | | |
| Mileage | | |
| Parking/Toll | | |
| Per Deim | | |
| Other | | |

Service Person's Signature

Customer's Signature

STUDENT WORKSHEET

Student Name_____

Title: Weekly Labor Record Worksheet

Directions: Using the mock information sheet provided fill out the weekly labor record.

WEEKLY LABOR RECORD

Week Ending_____19__

Social Security Number_____

Employee Name_____

| Day | Regular In | Regular Out | Regular Total | Overtime In | Overtime Out | Overtime Total | Daily Total |
|---|---|---|---|---|---|---|---|
| Monday | | | | | | | |
| Tuesday | | | | | | | |
| Wednesday | | | | | | | |
| Thursday | | | | | | | |
| Friday | | | | | | | |
| Saturday | | | | | | | |
| Sunday | | | | | | | |

| Days Worked | | Total Hours | Pay Rate | Total Earnings |
|---|---|---|---|---|
| | Regular | | | |
| | Overtime | | | |
| | Total | | Gross Pay | |

STUDENT WORKSHEET ANSWERS

## DAILY LABOR RECORD

Date June 26, 19 86

Customer Name + Address Lighthouse, Inc.
1661 Northwest Drive
Anywhere, Il 00001

Service/Work Performed Replaced drive be't + air filter + aligred drive head.

Equipment Serial/Identification Number 4441241

Time In 9:00 Time Out 12:00 Total Time 3.0

Miscellaneous Charges:

| | Item | Cost |
|---|---|---|
| Parts | Drive belt + filter | 13.41 |
| Mileage | | |
| Parking/Toll | 3 hrs. | 3.00 |
| Per Deim | | |
| Other | | |

John Henry
Service Person's Signature

Bill Will
Customer s Signature

STUDENT WORKSHEET ANSWERS

DAILY LABOR RECORD

Date June 26, 19 86

Customer Name + Address ABC Company, Inc.
606 Main Blvd.
Everywhere, IL 00000

Service/Work Performed Replaced printer ribbon, removed, cleaned, and lubricated print head assembly, lubricated head assembly guide rods, adjusted guide wire tension.

Equipment Serial/Identification Number 61341

Time In 1:00 Time Out 4:00 Total Time 3.0

Miscellaneous Charges:

| | Item | Cost |
|---|---|---|
| Parts | New ribbon | 13.95 |
| Mileage | | |
| Parking/Toll | 3 hrs. | 3.00 |
| Per Deim | | |
| Other | | |

John Henry
Service Person's Signature

Jane Doe
Customer's Signature

STUDENT WORKSHEET ANSWERS

WEEKLY LABOR RECORD

Week Ending June 30, 19 86

Social Security Number 000-00-0001

Employee Name John Henry

| Day | Regular In | Regular Out | Regular Total | Overtime In | Overtime Out | Overtime Total | Daily Total |
|---|---|---|---|---|---|---|---|
| Monday | 9:00 | 4:00 | 7 | | | | 7 |
| Tuesday | 8:00 | 4:00 | 8 | 4:00 | 6:00 | 2 | 10 |
| Wednesday | 8:30 | 4:30 | 8 | | | | 8 |
| Thursday | 8:00 | 4:00 | 8 | 4:00 | 5:30 | 1.5 | 9.5 |
| Friday | 9:30 | 5:30 | 8 | | | | 8 |
| Saturday | | | | | | | |
| Sunday | | | | | | | |

| Days Worked | | Total Hours | Pay Rate | Total Earnings |
|---|---|---|---|---|
| 5 | Regular | 39 | 10.50 | 409.50 |
| | Overtime | 3.5 | 12.25 | 42.87 |
| | Total | 42.5 | Gross Pay | 452.37 |

CHECKLIST

DUTY Performing Administrative Functions

TASK Maintain labor records.

ENABLER Fill out daily labor record.

STUDENT'S NAME _____ DATE _____

EVALUATOR'S NAME _____ COURSE _____

TIME : STARTED _____ COMPLETED _____

TOTAL _____

DIRECTIONS TO THE EVALUATOR:

Use the following checklist to evaluate the daily labor record worksheet.

| PERFORMANCE DETERMINANTS | YES | NO |
|---|---|---|
| The preparer: | | |
| - Recorded the date. | ____ | ____ |
| - Recorded the customer's name and address. | ____ | ____ |
| - Recorded Service/work performed. | ____ | ____ |
| - Recorded equipment serial/identification number. | ____ | ____ |
| - Recorded time in and time out. | ____ | ____ |
| - Recorded total time on the job. | ____ | ____ |
| - Recorded miscellaneous charges and their costs. | ____ | ____ |
| - Recorded daily labor record signed by both the service person and the customer. | ____ | ____ |
| - Recorded daily record made for each customer served. | ____ | ____ |

CHECKLIST

DUTY Performing Administrative Functions

TASK Maintain labor records.

ENABLER Fill out weekly labor record.

STUDENT'S NAME _____ DATE _____

EVALUATOR'S NAME _____ COURSE _____

TIME : STARTED _____ COMPLETED _____

TOTAL _____

DIRECTIONS TO THE EVALUATOR:

Use the following checklist to evaluate the weekly labor record worksheet.

| PERFORMANCE DETERMINANTS | YES | NO |
|---|---|---|
| The preparer: | | |
| - Recorded the week ending date. | ____ | ____ |
| - Recorded the employees' names and social security numbers. | ____ | ____ |
| - Recorded regular time in and time out and totaled for each day. | ____ | ____ |
| - Recorded and totaled overtime in and out for each day. | ____ | ____ |
| - Recorded a daily total for each day. | ____ | ____ |
| - Recorded total regular time hours & payrates. | ____ | ____ |
| - Recorded total overtime hours and payrates. | ____ | ____ |
| - Recorded the total earnings for regular and overtime hours calculated. | ____ | ____ |
| - Recorded gross earnings calculated. | ____ | ____ |

GUIDE SHEET

DUTY: Performing Administrative Functions

---

PERFORMANCE OBJECTIVE #5

TASK: Train new service technicians.

STANDARD OF PERFORMANCE OF TASK:

Familiarize new service technician trainee with co-workers, work area, company policies, job duties, responsibilities, routines and procedures necessary to function efficiently on the job.

SOURCE OF STANDARD:

Writing team of incumbent workers.

CONDITIONS FOR PERFORMANCE OF TASK:

Service technician trainee
Training manuals
Company policies book
Duty and responsibility list

ENABLING OBJECTIVES:

1. Explain the procedure for familarizing new service trainees with co-workers, work area, and company policies.

*RESOURCES:

1. Company policy book.
2. Company service technician training manual.
3. Guest speaker.
4. Examples of different policy and training manuals.
5. Checklist - Training service technicians.

TEACHING ACTIVITIES:

1. Presentation of service training procedures/techniques by guest speaker. (*3)
2. Conduct class discussion on training procedures/techniques. (*1, 2,3 & 4)
3. Conduct class discussion on attitudes of responsibilities of a service technician. (*1,2,3 & 4)

TEACHING ACTIVITIES: (cont.)

4. Instruct class to write five training techniques/procedures that they feel would be most helpful to them when they are trained on the job.
5. Conduct role playing activities where students take turns being new technicians (trainee) and experienced technicians trainer.

CRITERION-REFERENCED MEASURE:

Student will be able to identify the attitudes and responsibilities expected of a service technician.

PERFORMANCE GUIDE:

1. Introduce trainee to co-workers.
2. Familiarize trainee with work routine, shop facilities,
policies, and procedures.
3. Explain job duties and responsibilities.
4. Provide trainee with company policies book and training manuals.
5. Demonstrate unfamiliar service procedures.
6. Provide supervisory period.
7. Accompany trainee on service calls until he/she is familiar with procedures.
8. Answer questions asked by trainee.

GUIDE SHEET

DUTY: Performing Administrative Functions

---

PERFORMANCE OBJECTIVE #6

TASK: Maintain receiving records.

STANDARD OF PERFORMANCE OF TASK:

Receiving record will show purchase order number, date received, items received, items damaged or backordered, freight charges, cost, and seller's name.

SOURCE OF STANDARD:

Writing team of incumbent workers.

CONDITIONS FOR PERFORMANCE OF TASK:

| | |
|---|---|
| Shipping invoice | Central processing unit |
| Purchase order copy | Disk drive |
| Pen/Pencil | Monitor |
| File folders | Printer |
| File cabinet | Disks |
| Labels | Disk storage cabinet |
| Receiving record form | |

ENABLING OBJECTIVES:

1. Verify shipping invoice with a purchase order copy.
2. Prepare a receiving report.

*RESOURCES:

1. Rosenberg, Swinney & Van Sickle. Projects in Business Record Keeping. South-Western Publishing, Co., Cincinnati, OH, 1985.
2. Huffman & Stewart. General Recordkeeping, Seventh Edition. Gregg Division, McGraw-Hill Book Company, New York, NY, 1976.
3. Huffman & Stewart. Activity Guide and Working Papers for General Record Keeping. Gregg Division, McGraw-Hill Book Company, New York, NY, 1976.
4. Visual aid - Receiving report.
5. Mock information sheet.
6. Worksheet - Receiving report.
7. Checklist - Receiving records maintenance.

TEACHING ACTIVITIES:

1. Present lecture on receiving reports. (#1 & 2)
2. Conduct class discussion on the importance of verifying invoices and keeping receiving reports. (#1 & 2)
3. Instruct students to list in writing the components/parts they believe are important to maintain good receiving records.
4. Demonstrate how to verify an invoice. (Performance Guide #1)
5. Demonstrate how to complete a receiving report. (#1, 2, 3 & 4)
6. Instruct student to complete a blank receiving report using a mock information sheet provided by the instructor. (#5 & 6)

CRITERION-REFERENCED MEASURE:

Given a mock information sheet, the student will complete a receiving report worksheet including invoice/purchase order #, date received, vendor, invoice date, amount debit, balance and irregularities.

PERFORMANCE GUIDE:

1. Receive and inspect a shipment:
   A. Compare shipping invoice with purchase order copy.
   B. Mark items on invoice as they are unpacked.
   C. Make note of damaged, shortage/extra or incorrect goods to carrier.
   D. Make note of backordered goods.
   E. Sign freight bill and obtain copy.
2. Record shipment received information on receiving form.
   A. Date shipment received.
   B. Seller's name.
   C. Purchase order/inventory number.
   D. Freight costs.
   E. Total cost.
   F. Shipment inconsistencies.
   G. Make note of shipment storage location.
3. Save and store file in a dry, dust free place.

VISUAL AID

TITLE: Receiving Report

XYZ Company, Inc.
6666 Nowhere Ave.
Anywhere, IL 00000

Receiving Report

| Date | Vendor | Invoice Number | Invoice Date | Received By | Total Cost | Debit | Credit | Balance | Inconsistancies |
|---|---|---|---|---|---|---|---|---|---|
| | | | | | | | | | |
| | | | | | | | | | |
| | | | | | | | | | |
| | | | | | | | | | |
| | | | | | | | | | |
| | | | | | | | | | |
| | | | | | | | | | |

MOCK INFORMATION FOR STUDENT WORKSHEET

On May 10, 19__, the XYZ Company, Inc. received the following shipments. Using the information below, complete the receiving report worksheet provided by the instructor.

Shipment #1 - Invoice #764, dated April 16, 19__ from Parts Unlimited. John Henry received and inspected the shipment. John's purchase order showed they had ordered 6 disk drive belts at a cost of $22.00 each, but the shipment included only 5 disk drive belts.

Shipment #2 - Invoice #811, dated May 1, 19__, from Software, Inc.. John Henry received and inspected the shipment. John's purchase order identified an order of 10 boxes of DSDD diskettes at a cost of $25.00 per box. All ten boxes were enclosed in the shipment.

STUDENT WORKSHEET

nt Name_____

: Receiving Report Worksheet

tions: Using the mock information sheet provided fill out the receiving report.

XYZ Company, Inc.
6666 Nowhere Ave.
Anywhere, IL 00000

Receiving Report

| | Vendor | Invoice Number | Invoice Date | Received By | Total Cost | Debit | Credit | Balance | Inconsistancies |
|---|---|---|---|---|---|---|---|---|---|
| | | | | | | | | | |
| | | | | | | | | | |
| | | | | | | | | | |
| | | | | | | | | | |
| | | | | | | | | | |
| | | | | | | | | | |
| | | | | | | | | | |

STUDENT WORKSHEET ANSWERS

XYZ Company, Inc.
6666 Nowhere Ave.
Anywhere, IL 00000

Receiving Report

| Date | Vendor | Invoice Number | Invoice Date | Received By | Total Cost | Debit | Credit | Balance | Inconsistancies |
|---|---|---|---|---|---|---|---|---|---|
| 5/10 | Parts Un. | 764 | 4/16 | JH | 132.00 | 110.00 | 22.00 | 110.00 | -1belt |
| 5/10 | Soft.Inc. | 811 | 5/1 | JH | 250.00 | 250.00 | ----- | 250.00 | none |
| | | | | | | | | | |
| | | | | | | | | | |
| | | | | | | | | | |
| | | | | | | | | | |
| | | | | | | | | | |

CHECKLIST

DUTY Performing Administrative Funtions

TASK Maintain receiving records.

ENABLER Prepare a receiving report.

STUDENT'S NAME _____ DATE _____

EVALUATOR'S NAME _____ COURSE _____

TIME : STARTED _____ COMPLETED _____

TOTAL _____

DIRECTIONS TO THE EVALUATOR:

Use the following checklist to evaluate the receiving report worksheet.

| PERFORMANCE DETERMINANTS | YES | NO |
|---|---|---|
| The preparer: | | |
| - Recorded the date received. | ____ | ____ |
| - Recorded vendors name. | ____ | ____ |
| - Recorded invoice #. | ____ | ____ |
| - Recorded invoice date. | ____ | ____ |
| - Recorded employee who receiving shipment. | ____ | ____ |
| - Recorded invoice amount. | ____ | ____ |
| - Appropriately mark debit column. | ____ | ____ |
| - Recorded balance. | ____ | ____ |
| - Noted inconsistancies. | ____ | ____ |
| - Recorded freight costs. | ____ | ____ |
| - Recorded storage location. | ____ | ____ |

GUIDE SHEET

DUTY: Performing Administrative Functions

---

PERFORMANCE OBJECTIVE #7

TASK: Establish customer files.

STANDARD OF PERFORMANCE OF TASK:

Customer file will include customer name, account number, address, phone number, contact, and equipment/services received.

SOURCE OF STANDARD:

Writing team of incumbent workers.

CONDITIONS FOR PERFORMANCE OF TASK:

| | |
|---|---|
| Customer information | Central processing unit |
| Pen/Pencil | Disk drive |
| Typewriter | Monitor |
| File folders | Printer |
| File cabinet | Disks |
| Labels | Disk storage cabinet |
| Receiving record form | |

ENABLING OBJECTIVES:

1. Set up a customer information file.

*RESOURCES:

1. Baron, Steinfeld, and Schultheis. Working Papers and Supplementary Items for Practical Record Keeping and Bookkeeping. South-Western Publishing Company, Cincinnati, OH, 1983.
2. Baron, Steinfeld, and Schultheis. Practical Record Keeping, Fifth Edition. South-Western Publishing Company, Cincinnati, OH, 1981.
3. Huffman & Stewart. Activity Guide and Working Papers for General Accounting. Gregg Division, McGraw-Hill Book Company, New York NY, 1976.
4. Visual aid - Customer file.
5. Worksheet - Customer information file.
6. Mock information sheet.
7. Checklist - Establish customer files.

TEACHING ACTIVITIES:

1. Present lecture on different types of files. (*1,2, & 3)

TEACHING ACTIVITIES: (cont.)

2. Conduct class discussion on types of files.
3. Demonstrate how to establish and update a customer information file. (#4)
4. Instruct students to set up a customer information file using the mock information sheet provided by the instructor. (#5 & 6)

CRITERION-REFERENCED MEASURE:

Given a mock information sheet, the student will set up and update a customer information file including customer name, address, phone #, account #, contact person, type of equipment services received, date equipment/services received, credit terms and specific problems encountered.

PERFORMANCE GUIDE:

1. Set up customer information file.
2. Record customer information:
   A. Account number.
   B. Name and address.
   C. Phone number.
   D. Name of person to contact.
   E. Type of equipment or service received.
   F. Date equipment or services received.
   G. Specific problems encountered.
   H. Credit terms:
      1. Cash.
      2. Charge.
      3. Warranty.
      4. Update.
      5. Maintenance contract.
3. Update files.
4. Save and store files in a dry, dust free place.

VISUAL AID

Title: Customer Information File

Name: _____

Address: _____

_____

Contact Person: _____ Phone Number: _____

Account Number: _____ Credit Terms: _____

Account Type: _____

| Type Of Equipment | Serial / I.D. Number | Date Bought | Date Warranty Expires | Service Performed |
|---|---|---|---|---|
| | | | | |

MOCK INFORMATION SHEET

Customer Information:

Jane Doe

ABC Company, Inc.

606 Main Blvd.

Everywhere, Il. 00000

999-999-9999

Acct.# C-7664

2% discount on invoices paid in full within 10 days of purchase. Balance of any purchase due in full after 30 days after purchase date.

On 9/11/84, Purchase Disk Drive #611794 with a 90 day warranty. Had head cleaned and aligned on 12/85.

On 10/1/84, Purchased Daisywheel Printer #49314 with a 90 day warranty. Had planten adjusted on 1/5/85. Had ribbon replaced and adjusted printhead height on 4/27/85

On 12/2/85, Purchased 64K Central Processing Unit #92143 with a 180 day warranty.

STUDENT WORKSHEET

Student Name_____

Title: Customer Information File

Directions: Complete the following worksheet using the mock information provided.

Name: _____

Address: _____

_____

Contact Person: _____ Phone Number: _____

Account Number: _____ Credit Terms: _____

Account Type: _____

| Type Of Equipment | Serial / I.D. Number | Date Bought | Date Warranty Expires | Service Performed |
|---|---|---|---|---|
| | | | | |

STUDENT WORKSHEET ANSWERS

Name: ABC Company, Inc.

Address: 606 Main Blvd.
Everywhere, Il 00000

Contact Person: Jane Doe

Phone Number: 999/999-9999

Account Number: C-764

Credit Terms: 2/10, n30

Account Type: Charge

| Type Of Equipment | Serial / I.D. Number | Date Bought | Date Warranty Expires | Service Performed |
|---|---|---|---|---|
| Disk Drive | 611794 | 9/11/84 | 12/11/84 | 6/12/84-Clean + align head. |
| Daisy Wheel Printer | 49314 | 10/1/84 | 1/1/85 | 1/5/85-Adjust planten. |
| 64k C.P.U. | 92143 | 12/2/85 | 6/2/86 | 4/27/85-Replace ribbon + adjust printer head height. |

CHECKLIST

DUTY Performing Administrative Functions

TASK Establish Customer Files.

ENABLER Set up a customer information file.

STUDENT'S NAME _____ DATE _____

EVALUATOR'S NAME _____ COURSE _____

TIME : STARTED _____ COMPLETED _____

TOTAL _____

DIRECTIONS TO THE EVALUATOR:

Use the following checklist to evaluate the customer information worksheet.

| PERFORMANCE DETERMINANTS | YES | NO |
|---|---|---|
| The preparer | | |
| - Recorded customers names and addresses. | ____ | ____ |
| - Identified contact person and phone number. | ____ | ____ |
| - Recorded the account type and number. | ____ | ____ |
| - Recorded credit terms. | ____ | ____ |
| - Recorded type of equipment. | ____ | ____ |
| - Recorded the equipment serial and identification number. | ____ | ____ |
| - Recorded the date the equipment was bought. | ____ | ____ |
| - Recorded the warranty expiration date. | ____ | ____ |
| - Recorded service performed. | ____ | ____ |

GUIDE SHEET

DUTY: Performing Administrative Functions

---

PERFORMANCE OBJECTIVE #8

TASK: Maintain in-stock parts list.

STANDARD OF PERFORMANCE OF TASK:

In-stock parts list will reflect current changes in part names, numbers, code, description and total count.

SOURCE OF STANDARD:

Writing team of incumbent workers.

CONDITIONS FOR PERFORMANCE OF TASK:

Inventory sheets
Pen/Pencil
Inventory diskette
Central processing unit
Disk drive
Printer

ENABLING OBJECTIVES:

1. Complete in-stock parts list inventory sheet.

*RESOURCES:

1. Huffman & Stewart. General Recordkeeping, Seventh Edition. Gregg Division, McGraw-Hill Book Company, New York, NY. 1976.
2. Huffman & Stewart. Activity Guide and Working Papers for General Accounting. Gregg Division, McGraw-Hill Book Company New York, NY. 1976.
3. Visual aid - Inventory sheet.
4. Mock information sheet.
5. Worksheet - Inventory.
6. Checklist - Inventory.

TEACHING ACTIVITIES:

1. Present lecture on maintaining in-stock parts inventory. (#1 & 2)
2. Instruct student to write down at least four reasons why maintaining an in-stock parts inventory is important.

TEACHING ACTIVITIES: (cont.)

3. Conduct a class discussion on the importance of keeping inventory.
4. Demonstrate how to complete an inventory sheet. (#3)
5. Instruct student to complete an in-stock parts list inventory worksheet. (#4,5 & 6)

CRITERION-REFERENCED MEASURE:

Given a mock information sheet, the student will complete an in-stock parts inventory sheet including company name, counted by, computed by, recorded by, date, sheet no., stock #, description, unit of count, quantity in stock, maximum, minimum, unit cost, unit price, total value, and reorder decision.

PERFORMANCE GUIDE:

1. List parts on inventory sheet:
   A. Name.
   B. Part number.
   C. Code.
   D. Description.
   E. Minimum and maximum numbers needed.
   F. Value:
      1. Wholesale.
      2. Retail.
2. Count total for part.
3. Record totals on inventory sheet.
4. Obtain in-stock parts list form.
5. Enter total on in-stock parts list form.
6. Determine minimum and maximum number of part to be stocked.
7. Copy in-stock parts list form.
8. Reorder parts, if required.
9. Record parts reordered and date reordered.
10. Store inventory file in dry, dust free place.

VISUAL AID

Title: Parts Inventory Sheet

## Parts Inventory Sheet

Company Information: _____

_____

_____

Date: _____, 19__ Sheet Number: _____

| Counted By: | Computed By: | Recorded By: |
|---|---|---|
| | | |

| Description | Stock Number | Unit of Count | Quantity in Stock | Maximum | Minimum | Unit Cost | Unit Price | Total Value | Reorder | |
|---|---|---|---|---|---|---|---|---|---|---|
| | | | | | | | | | Yes | No |
| | | | | | | | | | | |

MOCK INFORMATION SHEET

In-Stock Parts
Inventory Information:

On June 30, 19__, John Henry of the XYZ Co.,Inc., 6666 Nowhere Ave, Anywhere, Il. 00000, counted, computed, and recorded the following items on inventory sheet #4.

Use this information to complete the inventory worksheet.

| Descrip. | Quantity In Stock | Unit of Count | Stock # | Unit Cost | Max. | Min. | Unit Price |
|---|---|---|---|---|---|---|---|
| -Printer Ribbon | 10 | ea. | 133 | 10.50 | 24 | 6 | 13.25 |
| -I.C. Chip | 2 | ea. | 134 | 18.00 | 12 | 6 | 26.50 |
| -Disk Drive Drive belt | 3 | ea. | 135 | 22.00 | 6 | 4 | 25.00 |
| -Case Retaining Screws | 2 | Box | 136 | 36.00 | 3 | 1 | 50.00 |

STUDENT WORKSHEET

Student Name_____

Title: Parts Inventory Sheet

Directions: Complete the following worksheet using the mock information provided.

Parts Inventory Sheet

Company Information: _____

_____

_____

Date: _____, 19__ Sheet Number: _____

| Counted By: | Computed By: | Recorded By: |
|---|---|---|
| | | |

| Description | Stock Number | Unit of Count | Quantity in Stock | Maximum | Minimum | Unit Cost | Unit Price | Total Value | Reorder | |
|---|---|---|---|---|---|---|---|---|---|---|
| | | | | | | | | | Yes | No |
| | | | | | | | | | | |

STUDENT WORKSHEET ANSWERS

Parts Inventory Sheet

Company Information: XYZ Company, Inc.
6666 Nowhere Ave.
Anywhere, Il 00000

Date: June 30, 1986

Sheet Number: 4

| Counted By: John Henry | | Computed By: John Henry | | | | | Recorded By: John Henry | | | |
|---|---|---|---|---|---|---|---|---|---|---|
| Description | Stock Number | Unit of Count | Quantity in Stock | Maximum | Minimum | Unit Cost | Unit Price | Total Value | Reorder Yes | Reorder No |
| Printer Ribbon | 133 | each | 10 | 24 | 6 | 10.50 | 13.25 | 132.50 | | X |
| I.C. Chip | 134 | each | 2 | 12 | 6 | 18.00 | 26.50 | 43.00 | X | |
| Disk Drive Belt | 135 | each | 3 | 6 | 4 | 22.00 | 25.00 | 75.00 | X | |
| Case Retaining Screws | 136 | box | 2 | 3 | 1 | 36.00 | 50.00 | 100.00 | | X |

CHECKLIST

DUTY Performing Administrative Functions

TASK Maintain in-stock parts list.

ENABLER Complete in-stock parts list inventory sheet.

STUDENT'S NAME _____ DATE _____

EVALUATOR'S NAME _____ COURSE _____

TIME : STARTED _____ COMPLETED _____

TOTAL _____

DIRECTIONS TO THE EVALUATOR:

Use the following checklist to evaluate the in-stock parts inventory worksheet.

| PERFORMANCE DETERMINANTS | YES | NO |
|---|---|---|
| The preparer | | |
| - Listed company information. | ____ | ____ |
| - Recorded inventory date. | ____ | ____ |
| - Marked inventory sheet number. | ____ | ____ |
| - Entered name of the person who countd computed and recorded the inventory. | ____ | ____ |
| - Provided part description. | ____ | ____ |
| - Recorded part stock number. | ____ | ____ |
| - Recorded unit count for each part. | ____ | ____ |
| - Recorded quantity in stock. | ____ | ____ |
| - Stocked maximum listed. | ____ | ____ |
| - Stocked minimum listed. | ____ | ____ |
| - Recorded unit cost. | ____ | ____ |
| - Recorded unit price. | ____ | ____ |
| - Calculated total in-stock value. | ____ | ____ |
| - Made reorder decision. | ____ | ____ |

GUIDE SHEET

DUTY: Performing Administrative Functions

---

PERFORMANCE OBJECTIVE #9

TASK: Order parts.

STANDARD OF PERFORMANCE OF TASK:

Order parts as minimum supply numbers are reached.

SOURCE OF STANDARD:

Writing team of incumbent workers.

CONDITIONS FOR PERFORMANCE OF TASK:

Vendor list
Parts catalog/price list
Parts inventory printout
Purchase order forms
Pen/pencil

ENABLING OBJECTIVES:

1. Identify items to reorder.
2. Fill out a purchase requisition form.

*RESOURCES:

1. Huffman & Stewart. General Recordkeeping, Seventh Edition. Gregg Division, McGraw-Hill Book Company, Cincinnati, OH. 1981.
2. Huffman & Stewart. Activity Guide and Working Papers for General Accounting. Gregg Division, McGraw-Hill Book Company, New York, NY. 1976.
3. Visual aid - Purchase Request.
4. Mock information sheet.
5. Worksheet - Purchase requisition.
6. Checklist - Purchase requisition.

TEACHING ACTIVITIES:

1. Present lecture on ordering parts, materials and equipment. (*1 & 2)
2. Present lecture on completing a purchase requisition. (*1 & 2)
3. Conduct class discussion on the parts and function of a purchase requisition.

TEACHING ACTIVITIES: (cont.)

4. Demonstrate how to fill out a purchase requisition. (*3)
5. Instruct students to fill out a purchase requisition worksheet using the mock information provided by the instructor. (*5 & 6)

CRITERION-REFERENCED MEASURE:

Using a mock information sheet, the student will complete a parts order form by filiing our a purchase requisition form
including account number, date, vendor, item number, quantity in stock, unit of count, description, unit price, total amount, subtotal, sales tax, shipping/ handling, total cost and buyer signature.

PERFORMANCE GUIDE:

1. Review parts inventory printout/list to identify items at or below reorder point.
2. Locate part information from catalogs and lists:
   A. Part name, and reorder number.
   B. Price.
   C. Possible vendor.
3. Determine quantity of part to be ordered.
4. Complete purchase requisition form:
   A. Name/address of vendor.
   B. Name/address of buyer.
   C. Date of order.
   D. Purchase order number.
   E. Part name, reorder number, and description.
   F. Terms for payment.
   G. Expediting charges.
5. Proofread purchase order.
6. Obtain authorization and place order.
7. Record order information in inventory file.

VISUAL AID

Title: Purchase Requesition

XYZ Company, Inc.

6666 Nowhere Ave.

Anywhere, Il 00000

Account Title _____ Account Number _____

Vendor _____ Purchase Order Number _____

_____ Date _____

_____ Credit Terms _____

| Item Number | Quantity Ordered | Unit Of Count | Description | Unit Price | Total Amount |
|---|---|---|---|---|---|
| | | | | | |
| | | | | Sub Total | |
| | | | | Sales Tax | |
| | | | | Shipping/Handling | |
| | | | | Total Cost | |

_____

Date Buyer Certification

MOCK INFORMATION SHEET

Use the information below to complete the purchase requisition worksheet.

On September 11, 19__, John Henry placed a purchase order # 123, with Parts Unlimited, 6681 Westlane, Vertex, IL 00003 for six disk drive belts at a cost of $22.00 each, two boxes of floppy diskettes at $26.00 per box, and 1 dozen of X-33 printer ribbons at $60.00 per dozen. John used the account titled "Parts Supplies", number C7776. Parts Unlimited charges $5.00 for shipping/handling of all orders, 6% IL state tax, and credit terms are included in total balance due 30 days after purchase date (n/30).

STUDENT WORKSHEET

Student Name_____

Title: Purchase Requisition Worksheet

Directions: Using the mock information sheet provided fill out the purchase requisition.

XYZ Company, Inc.

6666 Nowhere Ave.

Anywhere, Il 00000

Account Title _____ Account Number _____

Vendor _____ Purchase Order Number _____

_____ Date _____

_____ Credit Terms _____

| Item Number | Quantity Ordered | Unit Of Count | Description | Unit Price | Total Amount |
|---|---|---|---|---|---|
| | | | | | |
| | | | | Sub Total | |
| | | | | Sales Tax | |
| | | | | Shipping/Handling | |
| | | | | Total Cost | |

_____

Date Buyer Certification

XYZ Company, Inc.
6666 Nowhere Ave.
Anywhere, Il 00000

Account Title Part Supplies
Account Number C7776
Vendor Parts Unlimited
Purchase Order Number 123
6681 Westlane
Date 9/11/86
Vertex, Il. 00003
Credit Terms n/30

| Item Number | Quantity Ordered | Unit Of Count | Description | Unit Price | Total Amount |
|---|---|---|---|---|---|
| 1 | 6 | each | Disk Drive Belt | 22.00 | 132.00 |
| 2 | 2 | box | Floppy Diskettes | 26.00 | 52.00 |
| 3 | 1 | dozen | X-33 Printer Ribbons | 60.00 | 60.00 |
| | | | | Sub Total | 244.00 |
| | | | | Sales Tax | 14.64 |
| | | | | Shipping/Handling | 5.00 |
| | | | | Total Cost | 263.64 |

9/11/86 John Henry

Date Buyer Certification

CHECKLIST

DUTY Performing Administrative Functions

TASK Order Parts.

ENABLER Fill out a purchase order form for parts to be ordered.

STUDENT'S NAME _____ DATE _____

EVALUATOR'S NAME _____ COURSE _____

TIME : STARTED _____ COMPLETED _____

TOTAL _____

DIRECTIONS TO THE EVALUATOR:

Use the following checklist to evaluate the parts order information.

| PERFORMANCE DETERMINANTS | YES | NO |
|---|---|---|
| The preparer | | |
| - Recorded the account title and number. | ____ | ____ |
| - Recorded the P. O. number. | ____ | ____ |
| - Recorded the date entered. | ____ | ____ |
| - Provided vendor information. | ____ | ____ |
| - Listed the item number. | ____ | ____ |
| - Entered quantity order. | ____ | ____ |
| - Provided unit of count. | ____ | ____ |
| - Provided a part description. | ____ | ____ |
| - Calculated total amount. | ____ | ____ |
| - Calculated subtotal. | ____ | ____ |
| - Calculated sales tax. | ____ | ____ |
| - Entered shipping/handling cost. | ____ | ____ |
| - Computed total cost. | ____ | ____ |
| - Recorded buyer signature. | ____ | ____ |

GUIDE SHEET

DUTY: Performing Administrative Functions

---

PERFORMANCE OBJECTIVE #10

TASK: Maintain computer equipment inventory.

STANDARD OF PERFORMANCE OF TASK:

Computer equipment inventory will reflect levels of stock equipment on hand and a description of the equipment including equipment name, payment codes, cost, and reorder number.

SOURCE OF STANDARD:

Writing team of incumbent workers.

CONDITIONS FOR PERFORMANCE OF TASK:

| | |
|---|---|
| Pen/pencil | Disk drive |
| File cabinet | Printer |
| File folders | Monitor |
| Equipment inventory forms | |
| Central processing unit | |
| Equipment inventory information | |
| Equipment catalogs and price list | |

ENABLING OBJECTIVES:

1. Complete computer equipment inventory sheet.

*RESOURCES:

1. Huffman & Stewart. General Recordkeeping, Seventh Edition. Gregg Division, McGraw-Hill Book Company, New York, NY, 1976.
2. Huffman & Stewart. Activity Guide and Working Papers for General Accounting. Gregg Division, McGraw-Hill Book Company New York, NY. 1976.
3. Visual aid - Inventory Sheet.
4. Mock information sheet.
5. Worksheet - Inventory.
6. Checklist - Inventory.

TEACHING ACTIVITIES:

1. Present lecture on maintaining a computer equipment inventory. (*1 & 2)

TEACHING ACTIVITIES: (cont.)

2. Instruct student to write down at least four reasons why maintaining an computer equipment inventory is important.
3. Conduct a class discussion on the importance of keeping an inventory.
4. Demonstrate how to complete an inventory sheet. (*3)
5. Instruct student to complete a computer equipment inventory worksheet. (*4,5 & 6)

CRITERION-REFERENCED MEASURE:

Given a mock information sheet the student will complete an computer equipment inventory sheet including company name, counted by, computed by, recorded by date, sheet no., stock no., description, unit of count, quantity in stock,
minimum, unit cost, unit price, total value, and reorder decision.

PERFORMANCE GUIDE:

1. Compile data describing item in stock:
   A. Name.
   B. Equipment serial# or vendor code.
   C. Payment codes.
   D. Cost.
   E. Reorder number.
   F. Current count.
2. Obtain purchase invoice or sales invoice and determine changes to inventory on hand.
3. Enter equipment inventory information into file.
4. Print equipment inventory.
5. Process reorder when established reorder point is reached.
6. Save and store file in a dry, dust free place.

VISUAL AID

Title: Computer Equipment Inventory Sheet

## Computer Equipment Inventory Sheet

Company Information: _____

_____

_____

Date: _____, 19__ Sheet Number: _____

| Counted By: | Computed By: | Recorded By: |
|---|---|---|
| | | |

| Description | Stock Number | Unit of Count | Quantity in Stock | Maximum | Minimum | Unit Cost | Unit Price | Total Value | Reorder | |
|---|---|---|---|---|---|---|---|---|---|---|
| | | | | | | | | | Yes | No |
| | | | | | | | | | | |

MOCK INFORMATION SHEET

Computer Equipment

Inventory Information:

On July 1, 19__, John Henry of the XYZ Co.,Inc., 6666 Nowhere Ave, Anywhere, Il. 00000, counted, computed, and recorded the following items on inventory sheet #14.

Use this information to complete the inventory worksheet.

| Descrip. | Quantity In Stock | Unit of Count | Stock # | Unit Cost | Max. | Min. | Unit Price |
|---|---|---|---|---|---|---|---|
| -X-10 Printer | 2 | ea. | 010 | 525.00 | 6 | 2 | 645.00 |
| -Demon 64K Computer | 4 | ea. | 011 | 300.00 | 10 | 3 | 500.00 |
| -Demon Data Recorder | 5 | ea. | 012 | 70.00 | 8 | 4 | 86.75 |
| -E.Z. Color Monitor | 6 | ea. | 013 | 165.00 | 10 | 5 | 225.00 |
| -N.G.-80 Disk Drive | 3 | ea. | 014 | 200.00 | 6 | 1 | 335.25 |

STUDENT WORKSHEET

Student Name_____

Title: Computer Equipment Inventory Worksheet

Directions: Complete the following worksheet using the mock information provided.

Computer Equipment Inventory Sheet

Company Information: _____

_____

_____

Date: _____, 19__ Sheet Number: _____

| Counted By: | Computed By: | Recorded By: |
|---|---|---|
| | | |

| Description | Stock Number | Unit of Count | Quantity in Stock | Maximum | Minimum | Unit Cost | Unit Price | Total Value | Reorder | |
|---|---|---|---|---|---|---|---|---|---|---|
| | | | | | | | | | Yes | No |
| | | | | | | | | | | |

STUDENT WORKSHEET ANSWERS

Computer Equipment Inventory Sheet

Company Information: XYZ Company, Inc.
6666 Nowhere, Ave.
Anywhere, Il 00000

Date: July 1, 19 86

Sheet Number: 14

| Counted By: John Henry | Computed By: John Henry | Recorded By: John Henry |
|---|---|---|

| Description | Stock Number | Unit of Count | Quantity in Stock | Maximum | Minimum | Unit Cost | Unit Price | Total Value | Reorder Yes | Reorder No |
|---|---|---|---|---|---|---|---|---|---|---|
| X-10 Printer | 010 | each | 2 | 6 | 2 | 525.00 | 645.00 | 1290.00 | X | |
| Demon 64k Computer | 011 | each | 4 | 10 | 3 | 300.00 | 500.00 | 2000.00 | | X |
| Demon Data Recorder | 012 | each | 5 | 8 | 4 | 70.00 | 86.75 | 433.75 | | X |
| E.Z. Color Monitor | 013 | each | 6 | 10 | 5 | 165.00 | 225.00 | 1350.00 | | X |
| N.G.-80 Disk Drive | 014 | each | 3 | 6 | 1 | 200.00 | 335.25 | 1005.75 | | X |

CHECKLIST

DUTY Performing Administrative Functions

TASK Maintain computer equipment inventory.

ENABLER Fill out a computer equipment inventory sheet.

STUDENT'S NAME _____ DATE _____

EVALUATOR'S NAME _____ COURSE _____

TIME : STARTED _____ COMPLETED _____

TOTAL _____

DIRECTIONS TO THE EVALUATOR:

Use the following checklist to evaluate the computer equipment inventory worksheet.

| PERFORMANCE DETERMINANTS | YES | NO |
|---|---|---|
| The preparer | | |
| - Listed company information. | ____ | ____ |
| - Recorded inventory date. | ____ | ____ |
| - Marked inventory sheet number. | ____ | ____ |
| - Entered name of the person's who counted, computed, and recorded the inventory. | ____ | ____ |
| - Provided part descriptions. | ____ | ____ |
| - Recorded part stock numbers. | ____ | ____ |
| - Gave unit count for each part. | ____ | ____ |
| - Recorded in stock quantity. | ____ | ____ |
| - Listed stock maximum. | ____ | ____ |
| - Listed stock minimum. | ____ | ____ |
| - Recorded unit cost. | ____ | ____ |
| - Recorded unit price. | ____ | ____ |
| - Calculated total in-stock value. | ____ | ____ |
| - Made reorder decision. | ____ | ____ |

DUTY: Performing Administrative Functions

---

PERFORMANCE OBJECTIVE #11

TASK: Maintain records of service tools and equipment.

STANDARD OF PERFORMANCE OF TASK:

Records of purchases and repairs of equipment and tools used in conducting business will include date, cost, identification number and expected life.

SOURCE OF STANDARD:

Writing team of incumbent workers.

CONDITIONS FOR PERFORMANCE OF TASK:

| | |
|---|---|
| File folders | File cabinet |
| Pen/Pencil | Disk drive |
| Monitor | Printer |
| Disks | Disk storage cabinet |
| Service tool list | Central processing unit |

Listing of service equipment
Inventory information sheets

ENABLING OBJECTIVES:

1. Update service tools and equipment records.

RESOURCES:

1. Huffman & Stewart. General Recordkeeping. Seventh Edition. Gregg Division,McGraw-Hill Book Company, New York,NY. 1976.
2. Huffman & Stewart. Activity Guide and Working Papers for General Accounting. Gregg Division, McGraw-Hill Book Company New York, NY. 1976.
3. Service tools & equipment record sheets.
4. Checklist - Update service tools & equipment records.

TEACHING ACTIVITIES:

1. Present lecture on procedures for maintaining records of service tools and equipment. (#1 & 2)

TEACHING ACTIVITIES: (cont.)

2. Present lecture on the parts of an invoice voucher and their location. (#1 & 2)
3. Discuss the importance of the date of purchase, cost, identification number, expected life, and rate of depreciation of service tools.
4. Demonstrate to students how to identify and record service tools and equipment purchase information.
5. Demonstrate to students how to identify and record service tools and equipment.
6. Instruct students to update service tools and equipment records.

CRITERION-REFERENCED MEASURE:

Students will maintain service tools and equipment purchase and repair records including, date, cost, identification #, rate and method of depreciation and expected life.

PERFORMANCE GUIDE:

1. Obtain purchase invoices and record purchase of all tools and equipment:
   A. Date of purchase.
   B. Cost.
   C. Identification number.
   D. Expected life.
   E. Rate and method of depreciation.
2. Obtain repair invoices and record all repairs:
   A. Date of repair.
   B. Cost.
   C. Identification numbers
3. Record discontinuance of tools and equipment including any value at the time of disposal and any value received.
4. Update file.

DUTY Performing Administrative Functions

TASK Maintain records of service tools and equipment.

ENABLER Update service tools and equipment records.

STUDENT'S NAME _____ DATE _____

EVALUATOR'S NAME _____ COURSE _____

TIME : STARTED _____ COMPLETED _____

TOTAL _____

DIRECTIONS TO THE EVALUATOR:

Use the following checklist to evaluate student performance while updating service tools and equipment records.

| PERFORMANCE DETERMINANTS | YES | NO |
|---|---|---|
| The preparer | | |
| - Obtained all service tools and equipment purchase and repair invoices. | ____ | ____ |
| - Recorded the date of purchase. | ____ | ____ |
| - Recorded the identification number. | ____ | ____ |
| - Recorded the cost. | ____ | ____ |
| - Determined and recorded the rate and method of depreciation. | ____ | ____ |
| - Recorded the discontinuance of service tools and equipment. | ____ | ____ |
| - Recorded the value at the time of disposal and any value received for disposed tools and equipment. | ____ | ____ |

GUIDE SHEET

DUTY: Performing Administrative Functions

---

PERFORMANCE OBJECTIVE #12

TASK: Maintain shipping records.

STANDARD OF PERFORMANCE OF TASK:

Shipping records will show what items were shipped, how they were shipped, estimated time of arrival and what the freight charges were.

SOURCE OF STANDARD:

Writing team of incumbent workers.

CONDITIONS FOR PERFORMANCE OF TASK:

| | |
|---|---|
| Pen/pencil | Freight billing forms |
| File folders | Central processing unit |
| File cabinet | Disk drive |
| Monitor | Printer |
| Disks | Disk file cabinet |
| Customer information | |

ENABLING OBJECTIVES:

1. Complete shipping records.

*RESOURCES:

1. Baron, Steinfeld, & Schultheis. Practical Record Keeping, Fifth Edition. South-Western Publishing Company, Cincinnati, OH. 1981.
2. Baron, Steinfeld, & Schultheis. Working Papers and Supplementary Items for Practical Record Keeping and Bookkeeping. South-Western Publishing Company Cincinnati, OH. 1985.
3. Huffman & Stewart. General Recordkeeping, Seventh Edition. Gregg Division, McGraw-Hill Book Company, New York, NY. 1976.
4. Huffman & Stewart. Activity Guide and Working Papers for General Accounting. Gregg Division, McGraw-Hill Book Company New York, NY. 1976.
5. Checklist - Complete shipping list.

TEACHING ACTIVITIES:

1. Present lecture on maintaining shipping records. (*1,2,3 & 4)

TEACHING ACTIVITIES: (cont.)

2. Conduct discussion on information included in shipping records.
3. Present lecture on interpreting a freight billing form. (#1 & 3)
4. Demonstrate how to locate shipping record information on freight billing form.
5. Demonstrate how to complete shipping records.
6. Instruct student to interpret a freight billing for and complete a shipping record.

CRITERION-REFERENCED MEASURE:

Student will maintain shipping records to include items shipped, date shipped, how shipped, estimated time of arrival, and amount of freight charges.

PERFORMANCE GUIDE:

1. Obtain freight billing form.
2. Enter information into file:
   A. Customer's name, address, phone#, and contact person.
   B. Account number.
   C. Items shipped and serial#'s
   D. Method of shipment.
   E. Date of shipment.
   F. Freight charges.
   G. Estimated time of arrival.
3. Store shipping record file in a dry, dust free place.

CHECKLIST

DUTY Performing Administrative Functions

TASK Maintain shipping records.

ENABLER Complete shipping records.

STUDENT'S NAME _____ DATE _____

EVALUATOR'S NAME _____ COURSE _____

TIME : STARTED _____ COMPLETED _____

TOTAL _____

DIRECTIONS TO THE EVALUATOR:

Use the following checklist to evaluate student performance while maintaining shipping records.

| PERFORMANCE DETERMINANTS | YES | NO |
|---|---|---|
| The preparer | | |
| - Obtained freight billing form. | ____ | ____ |
| - Recorded customer name, address, phone number and contact person. | ____ | ____ |
| - Recorded the account title. | ____ | ____ |
| - Recorded items shipped and their serial numbers. | ____ | ____ |
| - Recorded method and date of shipment. | ____ | ____ |
| - Recorded the amount of freight charges. | ____ | ____ |
| - Recorded estimated time of arrival. | ____ | ____ |
| - Stored shipping record in a dry, dust free place. | ____ | ____ |

DUTY: Performing Administrative Functions

---

PERFORMANCE OBJECTIVE #13

TASK: Prepare items for shipping.

STANDARD OF PERFORMANCE OF TASK:

Package and label items to be shipped, complete freight billing forms and contact necessary delivery company for pick up; package must meet delivery company standards.

SOURCE OF STANDARD:

Writing team of incumbent workers.

CONDITIONS FOR PERFORMANCE OF TASK:

| | |
|---|---|
| Pen/pencil | Freight billing forms |
| File folders | Central processing unit |
| File cabinet | Disk drive |
| Monitor | Printer |
| Disks | Disk file cabinet |
| Customer information | |

ENABLING OBJECTIVES:

1. Package and label merchandise for shipping.
2. Complete freight billing forms.
3. Determine method of shipping and choose appropriate delivery company.

*RESOURCES:

1. Shipping procedures manual.
2. List of delivery companies and services offered.
3. Postal regulations booklet.
4. Freight billing forms.
5. Checklist - Package and label merchandise for shipping.

TEACHING ACTIVITIES:

1. Present lecture on methods and procedure for preparing merchandise for shipping.
2. Discuss types of packages, packing materials, fasteners and labeling.

TEACHING ACTIVITIES: (cont.)

3. Demonstrate how different merchandise requires different packing.
4. Instruct students to determine appropriate packaging for different types of merchandise.
5. Demonstrate how to fill out a shipping label and shipping invoice.
6. Instruct student to complete a shipping label and invoice from shipping information provided.
7. Discuss types of delivery companies and the services offered by each.
8. Discuss return merchandise authorization number (RMAN).
9. Present lecture on filling out a freight billing form.
10. Discuss the location and purpose of each part of the freight billing form.
11. Demonstrate how to complete a freight billing form.
12. Instruct student to complete a freight billing form based on shipping information provided.

CRITERION-REFERENCED MEASURE:

The student will assemble merchandise to be shipped, determine appropriate packaging and package items, prepare shipping label, invoice, and freight billing form and contact delivery company for pick up of package to be shipped.

PERFORMANCE GUIDE:

1. Assemble items to be shipped.
2. Prepare items for shipping:
   A. Package items in boxes or cartons using sufficient packing materials to avoid shipping damage.
   B. Record on a shipping invoice the kind and amount of items placed in the box and enclose packing slip with shipment.
   C. Fasten the box using tape, string, glue, etc.
3. Label all boxes, cartons, packages, etc.;
   A. Customer's name and address.
   B. Dealership's name and address.
   C. Return merchandise authorization number.
4. Fill out a freight billing form in triplicate:
   A. Dealership's name and address.
   B. Customer's name, address, and account number.
   C. Number of boxes, cartons, packages,etc.
   D. Description of items to shipped.
   E. Weight of each package.
   F. Method freight charges will be paid.
   G. Date of shipment.

PERFORMANCE GUIDE: (cont.)

5. Review available shipping methods and select most efficient means:
   A. Delivery rates.
   B. Time turnover for delivery.
   C. Delivery routes.
   D. Insurance availability.
   E. Guarantee of delivery.
6. Contact shipping company to pick up packages:
   A. United Parcel Service.
   B. Overnight Delivery.
   C. Parcel Post.
   D. Bus Line.
7. File one copy of freight billing form for your record, second copy goes to shipping company and original copy goes to company.
8. Verify contact with receiving company for rush or special delivery.

CHECKLIST

DUTY Performing Administrative Functions

TASK Prepare items for shipping.

ENABLER Package and label merchandise for shipping.

STUDENT'S NAME _____ DATE _____

EVALUATOR'S NAME _____ COURSE _____

TIME : STARTED _____ COMPLETED _____

TOTAL _____

DIRECTIONS TO THE EVALUATOR:

Use the following checklist to evaluate student performance while packaging and labeling merchandise for shipping.

| PERFORMANCE DETERMINANTS | YES | NO |
|---|---|---|
| The preparer | | |
| - Assembled merchandise to be shipped. | ____ | ____ |
| - Protected the merchandise with package and packing materials. | ____ | ____ |
| - Completed shipping invoice and placed in the package. | ____ | ____ |
| - Securely fasten package shut. | ____ | ____ |
| - Completeed and attached shipping label to the package. | ____ | ____ |
| - Shipping label included the customers name/address and the dealership's name/address. | ____ | ____ |
| - Completed freight billing form. | ____ | ____ |
| - Selected the most efficient shipping method. | ____ | ____ |
| - Contacted and selected delivery company. | ____ | ____ |
| - Kept a copy of the freight billing form for company records. | ____ | ____ |
| - Made verification contact with receiving company for rush or special deliveries. | ____ | ____ |

GUIDE SHEET

DUTY: Performing Administrative Functions

---

PERFORMANCE OBJECTIVE #14

TASK: Update Service Manuals

STANDARD OF PERFORMANCE OF TASK:

Replace out-of-date pages with current page, so manual contains most recent information.

SOURCE OF STANDARD:

Writing team of incumbent workers.

CONDITIONS FOR PERFORMANCE OF TASK:

Update instructions
Update pages
Service manuals

ENABLING OBJECTIVES:

1. Remove and replace out-of-date pages.

*RESOURCES:

1. Service manuals.
2. Sample of update pages.
3. Sample of update instructions.
4. Checklist - Remove and replace out-of-date pages.

TEACHING ACTIVITIES:

1. Present lecture on importance of updating the service manual.
2. Discuss different types of updates.
3. Show students sample update pages.
4. Present lecture on the procedure for updating service manuals.
5. Discuss interpreting update instructions and replacing out-of-date pages.
6. Discuss the disposal or storage of out-of-date pages.
7. Demonstrate interpreting update instructions and replacing out-of-date pages.
8. Instruct student to update a service manual according to provided instructions and update materials.

CRITERION-REFERENCED MEASURE:

Student will interpret update instructions by removing and filing or dispose of out-of-date pages, and insert up-to-date pages in a service manual.

PERFORMANCE GUIDE:

1. Read update instructions information, and additions to logic/reliability reports.
2. Remove and discard outdated pages.
3. Replace with up-to-date pages.

CHECKLIST

DUTY Performing Administrative Functions

TASK Update service manuals.

ENABLER Remove and replace out of date pages.

STUDENT'S NAME _____ DATE _____

EVALUATOR'S NAME _____ COURSE _____

TIME : STARTED _____ COMPLETED _____

TOTAL _____

DIRECTIONS TO THE EVALUATOR:

Use the following checklist to evaluate student performance while removing and replacing out of date pages.

| PERFORMANCE DETERMINANTS | YES | NO |
|---|---|---|
| The preparer | | |
| - Updated the service manual. | ____ | ____ |
| - Obtained update information packet. | ____ | ____ |
| - Read the update instructions. | ____ | ____ |
| - Removed all out-of-date pages from the service manual. | ____ | ____ |
| - Filed away or disposed all out-of-date pages. | ____ | ____ |
| - Replaced all up-to-date pages in the correct order and position in the service manual. | ____ | ____ |
| - Returned the service manual to its correct storage position. | ____ | ____ |

GUIDE SHEET

DUTY: Performing Administrative Functions

---

PERFORMANCE OBJECTIVE #15

TASK: Maintain call report record.

STANDARD OF PERFORMANCE OF TASK:

Service call record will include problem, action taken, length of service call, parts needed, customer to be charged, mileage, travel time, and auto expenses.

SOURCE OF STANDARD:

Writing team of incumbent workers.

CONDITIONS FOR PERFORMANCE OF TASK:

Call record
Pen/pencil
File folders
File cabinet

ENABLING OBJECTIVES:

1. Record service calls in call report order.

*RESOURCES:

1. Company policy & procedures manual.
2. Service call sheet.
3. Call report record.
4. Checklist - Record service calls in call report record.

TEACHING ACTIVITIES:

1. Present lecture on information included in call report records.
2. Discuss customer information.
3. Discuss types of service calls.
4. Discuss service work information.
5. Demonstrate the procedure for completing a service call report record.
6. Instruct student to complete a service call report record.

CRITERION-REFERENCED MEASURE:

The student will obtain the service call information and complete a service call report record including problem, action taken, length of call, parts needed, customer information and travel expenses.

PERFORMANCE GUIDE:

1. Complete service call.
2. Complete call record form:
   A. Customer's name.
   B. Customer's problem.
   C. Type of call:
      1. Warranty call.
      2. Maintenance contract call.
      3. Service call.
   D. Parts replaced or adjustments made.
   E. Date call completed.
   F. Total time spent on the job.
   G. Sign or initial form.

CHECKLIST

DUTY Performing Administrative Functions

TASK Maintain call report record.

ENABLER Record service calls in call report record.

STUDENT'S NAME _____ DATE _____

EVALUATOR'S NAME _____ COURSE _____

TIME : STARTED _____ COMPLETED _____

TOTAL _____

DIRECTIONS TO THE EVALUATOR:

Use the following checklist to evaluate student performance while recording service calls in call report record.

| PERFORMANCE DETERMINANTS | YES | NO |
|---|---|---|
| The preparer | | |
| - Obtained service call information. | ____ | ____ |
| - Recorded customer's information. | ____ | ____ |
| - Recorded customer's problem. | ____ | ____ |
| - Recorded the type of call identified. | ____ | ____ |
| - Recorded the action taken. | ____ | ____ |
| - Recorded the total time spent on the job. | ____ | ____ |
| - Recorded all parts needed. | ____ | ____ |
| - Recorded the date of the call. | ____ | ____ |
| - Recorded the travel information. | ____ | ____ |
| - Signed or initialized the call report information. | ____ | ____ |

GUIDE SHEET

DUTY: Performing Administrative Functions

---

PERFORMANCE OBJECTIVE #16

TASK: Conduct representative meetings.

STANDARD OF PERFORMANCE OF TASK:

Conduct meeting with other technicians to exchange ideas, discuss problems, updates and new products; keep abreast of what is going on in your service area and field of employment.

SOURCE OF STANDARD:

Writing team of incumbent workers.

CONDITIONS FOR PERFORMANCE OF TASK:

Agenda
Meeting place
Fellow service technicians

ENABLING OBJECTIVES:

1. Prepare and conduct a meeting.

*RESOURCES:

1. H. Roberts. Roberts Rules of Order. Interstate Printers & Publishers, Inc., Danville, IL.
2. W. Buescher. Instant Meeting Planning. Interstate Printers and Publishers, Danville, IL.
3. Sample agendas.
4. Sample meeting room arrangements.
5. Checklist - Prepare and conduct a meeting.

TEACHING ACTIVITIES:

1. Present lecture on preparing for a meeting. (*2)
2. Discuss agenda and how to plan one.
3. Discuss ways of notifing technicians of the meeting.
4. Discuss meeting room arrangements.
5. Present a lecture on conducting a meeting. (*1 & 2)
6. Discuss presiding officer, minutes of the meeting, planned agenda, old business, new business, entertainment and refreshments.

TEACHING ACTIVITIES: (cont.)

7. Demonstrate how to plan and conduct a meeting.
8. Instruct students to plan and conduct a representative meeting. (*5)

CRITERION-REFERENCED MEASURE:

Student will prepare an agenda, make the meeting room arrangements, determine a method of contacting other technicians, determine meeting time and date and act as presiding officer at meeting. The meeting must start on time and follow the planned agenda.

PERFORMANCE GUIDE:

1. Prepare agenda.
2. Arrange meeting time and place.
3. Contact people who are to attend meeting.
4. Hold meeting promptly at scheduled time and place.

CHECKLIST

DUTY Performing Administrative Functions

TASK Conduct representative meetings.

ENABLER Prepare and conduct a meeting.

STUDENT'S NAME _____ DATE _____

EVALUATOR'S NAME _____ COURSE _____

TIME : STARTED _____ COMPLETED _____

TOTAL _____

DIRECTIONS TO THE EVALUATOR:

Use the following checklist to evaluate student performance while preparing and conducting a meeting.

| PERFORMANCE DETERMINANTS | YES | NO |
|---|---|---|
| The preparer | | |
| - Planned an agenda. | ____ | ____ |
| - Arranged meeting time and place. | ____ | ____ |
| - Determined a method for contacting technicians. | ____ | ____ |
| - Contacted all technicians who were to attend. | ____ | ____ |
| - Identified ard followed a meeting room arrangements. | ____ | ____ |
| - Acted as presiding officer. | ____ | ____ |
| - Started and ended the meeting on time. | ____ | ____ |
| - Followed the agenda. | ____ | ____ |
| - Assigned someone to keep the minutes of the meeting. | ____ | ____ |

GUIDE SHEET

DUTY: Performing Administrative Functions

---

PERFORMANCE OBJECTIVE #17

TASK: Establish customer and equipment history files.

STANDARD OF PERFORMANCE OF TASK:

Customer and equipment history records will include customer name, phone number, contact person, date, equipment style/serial number, type of equipment, and maintenance history.

SOURCE OF STANDARD:

Writing team of incumbent workers.

CONDITIONS FOR PERFORMANCE OF TASK:

| | |
|---|---|
| Customer information | Pen/Pencil |
| Typewriter | File folders |
| Labels | Filing cabinet |
| Information form | Central processing unit |
| Monitor | Disk drive |
| Diskettes | Printer |

ENABLING OBJECTIVES:

1. Record information in customer and equipment history files.

*RESOURCES:

1. Baron, Steinfeld, and Schultheis. Practical Record Keeping, Fifth Edition. South-Western Publishing Company, Cincinnati, OH. 1981.
2. Baron, Steinfeld, and Schultheis. Working Papers and Supplementary Items for Practical Record Keeping and Bookkeeping. South-Western Publishing Company, Cincinnati, OH. 1983.
3. Purchase invoice information.
4. Customer and equipment history files.
5. Checklist-Record information in customer and equipment history file.

TEACHING ACTIVITIES:

1. Present lecture on recording customer information in file. (#1 & 2)

TEACHING ACTIVITIES: (cont.)

2. Discuss sources and methods of obtaining and filing customer name, address, phone number and contact person.
3. Obtain customer information and how to enter it into the file.
4. Present lecture on recording equipment information in file. (#1 & 2)
5. Discuss sources and methods for obtaining and filing model/style #, serial#, installation date, making status, service, maintenance agreement and engineering updates.
6. Demonstrate different methods for obtaining and filing equipment information.
7. Conduct a class discussion on the importance of having customer and equipment history files.
8. Instruct student to establish a customer and equipment history file. (#5)

CRITERION-REFERENCED MEASURE:

The student will obtain customer and equipment information and establish a customer and equipment history file including customer name, address, phone number, contact person, date purchased, equipment style/serial #, type of equipment and maintenance history.

PERFORMANCE GUIDE:

1. Set up information file for each customer:
   A. Record customer information:
      1. Name.
      2. Address.
      3. Phone #
      4. Contact person.
   B. Record equipment information:
      1. Model/style number.
      2. Serial number.
      3. Installation date.
      4. Machine status (leased/owned).
      5. Service/maintenance agreement.
      6. Engineering update.
3. Update file.
4. Store file.

CHECKLIST

DUTY Performing Administrative Functions

TASK Establish customer and equipment history files.

ENABLER Update history files.

STUDENT'S NAME _____ DATE _____

EVALUATOR'S NAME _____ COURSE _____

TIME : STARTED _____ COMPLETED _____

TOTAL _____

DIRECTIONS TO THE EVALUATOR:

Use the following checklist to evaluate student performance while establishing customer and equipment history files.

| PERFORMANCE DETERMINANTS | YES | NO |
|---|---|---|
| The preparer | | |
| - Identified a source for customer and equipment information. | ____ | ____ |
| - Obtained customer and equipment information. | ____ | ____ |
| - Set up an information file for each customer. | ____ | ____ |
| - Recorded and filed the customer's name, address, phone number and contact person. | ____ | ____ |
| - Recorded and filed equipment model/style number, serial number, installation date, machine status, service/maintenance agreement and engineering updates. | ____ | ____ |
| - Stored file in a safe place. | ____ | ____ |

GUIDE SHEET

DUTY: Performing Administrative Functions

---

PERFORMANCE OBJECTIVE #18

TASK: Calculate equipment repair costs.

STANDARD OF PERFORMANCE OF TASK:

Total repair cost will include labor cost, parts cost, travel cost, and taxes.

SOURCE OF STANDARD:

Writing team of incumbent workers.

CONDITIONS FOR PERFORMANCE OF TASK:

List of customer problems
Hourly labor charge list
Parts price list
Pen/Pencil
Paper
Calculator

ENABLING OBJECTIVES:

1. Determine total repair cost.
2. Fill out repair bill.

*RESOURCES:

1. List of repair charges.
2. Parts price list.
3. Sample repair bills.
4. Pen, paper and calculator.
5. Checklist - Determine total repair cost.

TEACHING ACTIVITIES:

1. Present lecture on calculating equipment repair cost procedures.
2. Discuss calculating labor costs.
3. Discuss calculating parts costs.
4. Discuss calculating travel costs.
5. Demonstrate to student how to calculate equipment repair costs.
6. Discuss different types of service calls.
7. Demonstrate to student how to fill-out a repair bill.

TEACHING ACTIVITIES: (cont.)

8. Conduct a question and answer session on calculating equipment repair costs.
9. Instruct student to calculate total equipment repair cost and fill out a repair bill.

CRITERION-REFERENCED MEASURE:

The student will calculate the total equipment repair cost, determine type of service call, and fill out a repair bill including labor cost, parts cost, travel cost, and taxes.

PERFORMANCE GUIDE:

1. Calculate labor cost:
   A. Total time spent on job.
   B. Multiply hours by hourly rate.
   C. Use minimum labor charge when necessary.
2. Calculate parts cost:
   A. List parts used.
   B. Look up part number and price.
   C. Total parts cost.
   D. Total taxable costs and calculate tax cost.
3. Calculate travel costs:
   A. Total mileage for job.
   B. Multiply mileage by charge per mile.
4. Total all costs.
   NOTE: When there is no charge, indicate why (warranty repair, recall, update, ect.).

CHECKLIST

DUTY Performing Administrative Functions

TASK Calculate equipment repair costs.

ENABLER Determine total repair cost.

STUDENT'S NAME _____ DATE _____

EVALUATOR'S NAME _____ COURSE _____

TIME : STARTED _____ COMPLETED _____

TOTAL _____

DIRECTIONS TO THE EVALUATOR:

Use the following checklist to evaluate student performance while determining total repair cost.

| PERFORMANCE DETERMINANTS | YES | NO |
|---|---|---|
| The preparer | | |
| - Obtained all repair information. | ____ | ____ |
| - Calculated labor costs. | ____ | ____ |
| - Calculated parts costs. | ____ | ____ |
| - Calculated travel costs. | ____ | ____ |
| - Determined type of service call. | ____ | ____ |
| - Filled out a repair bill. | ____ | ____ |
| - Correctly calculated and totaled all costs. | ____ | ____ |

GUIDE SHEET

DUTY: Performing Administrative Functions

---

PERFORMANCE OBJECTIVE #19

TASK: Calculate systems installation costs.

STANDARD OF PERFORMANCE OF TASK:

Total installation cost will include equipment needed, prices, taxes, rebates, handling costs, and maintenance contract cost.

SOURCE OF STANDARD:

Writing team of incumbent workers.

CONDITIONS FOR PERFORMANCE OF TASK:

Customer requirements
System layout
Equipment price list
Pen/Pencil
Estimate forms
Calculator

ENABLING OBJECTIVES:

1. Determine system installation cost.
2. Review customer requirements and system layout.

*RESOURCES:

1. Equipment price list.
2. List of installation costs.
3. Sample installation bills.
4. Pen, paper and calculator.
5. Checklist - Determining system installation cost.

TEACHING ACTIVITIES:

1. Present lecture on determining customers requirements.
2. Discuss different types of customers needs.
3. Discuss reviewing system layout to determine equipment needs.
4. Present lecture on calculating system installation cost and completing an estimate form.

TEACHING ACTIVITIES: (cont.)

5. Discuss calculating retail price of equipment.
6. Discuss calculating sales tax and shipping/ handling costs.
7. Discuss calculating rebates and discounts.
8. Discuss types of maintenance contracts and costs.
9. Discuss operator training costs.
10. Demonstrate how to calculate system installation costs and fill-in a system installation estimate form.
11. Instruct student to calculate system installation cost and fill-in a estimate form.

CRITERION-REFERENCED MEASURE:

The student will review system layout and customer requirements, calculate system installation costs and complete a estimate form.

PERFORMANCE GUIDE:

1. Review customer requirements
2. Review system layout.
3. List equipment needed to meet requirements.
4. Calculate retail price for each piece of equipment.
5. Calculate sales tax.
6. Calculate rebates or discounts.
7. Calculate shipping and handling costs.
8. Calculate maintenance contract cost (if desired).
9. Calculate operator training cost.
10. Total all costs.
11. Fill in company name/individual's name and equipment costs on estimate forms.
12. Sign and date estimate form; give time limit on estimate expiration.
13. Give original estimate to customer and keep duplicate for files.

DUTY Performing Administrative Functions

TASK Calculate systems installation costs.

ENABLER Determine installation costs.

STUDENT'S NAME _____ DATE _____

EVALUATOR'S NAME _____ COURSE _____

TIME : STARTED _____ COMPLETED _____

TOTAL _____

DIRECTIONS TO THE EVALUATOR:

Use the following checklist to evaluate student performance while determining installation costs.

| PERFORMANCE DETERMINANTS | YES | NO |
|---|---|---|
| The preparer | | |
| - Reviewed customer requirements and system layout. | ____ | ____ |
| - Determined equipment needed and retail price. | ____ | ____ |
| - Calculated sales tax | ____ | ____ |
| - Determined rebates and discounts. | ____ | ____ |
| - Calculated shipping and handling costs. | ____ | ____ |
| - Determined type and cost of maintenance contract. | ____ | ____ |
| - Calculated operator training cost. | ____ | ____ |
| - Totaled all installation costs. | ____ | ____ |
| - Completed an estimate form. | ____ | ____ |
| - Signed and dated estimate form. | ____ | ____ |
| - Listed an estimate expiration date. | ____ | ____ |

DUTY: Performing Administrative Functions

---

PERFORMANCE OBJECTIVE #20

TASK: Update on-site maintenance log.

STANDARD OF PERFORMANCE OF TASK:

On-site maintenance log must indicate the style and serial number of machine, system or manufacturing update, service performed, date and service person's signature or initials.

SOURCE OF STANDARD:

Writing team of incumbent workers.

CONDITIONS FOR PERFORMANCE OF TASK:

On-site maintenance log sheet
Service performed information
Pen/pencil

ENABLING OBJECTIVES:

1. Determine an[illegible] maintenance performed on equipment.
2. Maintain [illegible] maintenance log.

*RESOURCES:

1. On-site maintenance log.
2. Equipment Service record.
3. Visual Aid - Maintenance log.
4. Mock information sheet.
5. Worksheet - Maintenance log.
6. Checklist-Determine and record maintenance performed on equipment.

TEACHING ACTIVITIES:

1. Present lecture on procedures for maintaining a on-site maintenance log.
2. Discuss equipment identification by style and serial number.
3. Discuss different types of service (preventive maintenance, service repairs, manufacturing, system update/upgrade, repeating problem.

4. Discuss completing on-site maintenance log.
5. Demonstrate procedure for completing on-site maintenance log.
6. Conduct a question and answer session on maintaining and on-site maintenance log.
7. Instruct student to complete an on-site maintenance log.

CRITERION-REFERENCED MEASURE:

The student will complete a on-site maintenance log including equipment style and serial number, type of service performed, date of service and service person's signature or initials.

PERFORMANCE GUIDE:

1. Obtain on-site maintenance log.
2. Record style and serial number of machine serviced.
3. Record what service was performed.
   A. Preventive maintenance.
   B. Service repairs
   C. Manufacturing/system update.
   D. Repeating problems.
4. Record date of service and sign or initial log.
5. Return on-site maintenance log to proper on-site storage place.

VISUAL AID

MAINTENANCE / REPAIR LOG

Site Name: _____

Equipment Type: _____

Equipment Serial Number: _____

| Technician's Name and I.D. Number | Date | Time On | Time Off | Complaint | Work Performed | Replacement Parts Used | Notes |
|---|---|---|---|---|---|---|---|
| | | | | | | | |

117

MOCK INFORMATION FOR STUDENT WORKSHEET

On 8/23/86, John Henry, technician #04 of the XYZ company received a service call from the ABC company concerning a printer which was skipping letters. John arrived on the site at 1:10 pm and was taken to a daisy wheel printer, serial #641221. Upon inspection of the printer, John found that several of the print arms on the daisy wheel were damaged. John replaced the daisy wheel, part #62129, and performed an operational check. The operational check showed that M's and W's were not fully printed. John adjusted the planten to correct the print problems. John performed a second operational check and found everything in order. John noted that the printer was due for a scheduled maintenance lubrication on 9/24/86 and left the ABC site at 2:45pm.

STUDENT WORKSHEET

Student Name _____

Title: Maintenance / Repair Log Worksheet

Directions: Using the mock information sheet provided fill out the maintenance / repair log.

MAINTENANCE / REPAIR LOG

Site Name: _____

Equipment Type: _____

Equipment Serial Number: _____

| Technician's Name and I.D. Number | Date | Time On | Time Off | Complaint | Work Performed | Replacement Parts Used | Notes |
|---|---|---|---|---|---|---|---|
| | | | | | | | |

STUDENT WORKSHEET ANSWERS

MAINTENANCE / REPAIR LOG

Site Name: ABC Company

Equipment Type: Daisywheel Printer

Equipment Serial Number: 641221

| Technician's Name and I.D. Number | Date | Time On | Time Off | Complaint | Work Performed | Replacement Parts Used | Notes |
|---|---|---|---|---|---|---|---|
| John Henry-04 | 8/23/86 | 1:10pm | 2:45pm | Printer 641221 skipping letters | Replaced daisy wheel, aligned planten | Daisywheel 62129 | Scheduled maintenance lubrication on 9/24/86 |

CHECKLIST

DUTY Performing Administrative Functions

TASK Update on-site maintenance log.

ENABLER Determine and record maintenance performed on equipment.

STUDENT'S NAME _____ DATE _____

EVALUATOR'S NAME _____ COURSE _____

TIME : STARTED _____ COMPLETED _____

TOTAL _____

DIRECTIONS TO THE EVALUATOR:

Use the following checklist to evaluate student performance while determining and recording maintenance performed on equipment.

| PERFORMANCE DETERMINANTS | YES | NO |
|---|---|---|
| The preparer | | |
| - Obtained the on-site maintenance log. | ____ | ____ |
| - Recorded equipment style and serial number. | ____ | ____ |
| - Identified type of service performed. | ____ | ____ |
| - Recorded type of service. | ____ | ____ |
| - Recorded the date the service. | ____ | ____ |
| - Signed the maintenance log. | ____ | ____ |
| - Return on-site maintenance log to its proper storage place. | ____ | ____ |

GUIDE SHEET

DUTY: Maintaining Customer Service

---

PERFORMANCE OBJECTIVE #21

TASK: Answer customer questions

STANDARD OF PERFORMANCE OF TASK:

Maintain customer satisfaction by answering customer questions as they arise.

SOURCE OF STANDARD:

Writing team of incumbent workers.

CONDITIONS FOR PERFORMANCE OF TASK:

Service knowledge
Courteous mannerisms

ENABLING OBJECTIVES:

1. Maintain public relations by answering customer's questions.

*RESOURCES:

1. Company Policy Manual
2. ACE. Communications Handbook. Interstate Printers, Inc., Danville, IL.
3. Checklist - Answering customer Questions.

TEACHING ACTIVITIES:

1. Present a lecture on mannerisms and techniques for dealing with the public. (*2)
2. Discuss greeting customers.
3. Discuss dealing with irate customers.
4. Discuss phone conversations vs. person to person conversations.
5. Demonstrate to students proper techniques for dealing with the public.
6. Conduct a question and answer session on situations and ways of dealing with them.
7. Instruct students to take turns at role playing different customer related problems.

CRITERION-REFERENCED MEASURE:

Student will maintain public relations by answering customer questions and dealing with customer related problems as they arise.

PERFORMANCE GUIDE:

1. Greet customer.
2. Listen to customer question.
3. Consult service manuals, knowledge and other personnel for assistance.
4. Provide customer with answer promptly.
5. Thank customer and invite them back if they have any other questions.

CHECKLIST

DUTY Maintaining Customer Service

TASK Answer customer questions.

ENABLER Maintain public relations by answering customer questions.

STUDENT'S NAME _____ DATE _____

EVALUATOR'S NAME _____ COURSE _____

TIME : STARTED _____ COMPLETED _____

TOTAL _____

DIRECTIONS TO THE EVALUATOR:

Use the following checklist to evaluate student performance while answering customer questions.

| PERFORMANCE DETERMINANTS | YES | NO |
|---|---|---|
| The preparer | | |
| - Greeted the customer. | ____ | ____ |
| - Listened to customer question. | ____ | ____ |
| - Consulted service manuals, knowledge and other personnel for the answer to the question. | ____ | ____ |
| - Provided the customer with an answer immediately. | ____ | ____ |
| - Followed-up with the customer answer when it was not immediately available. | ____ | ____ |
| - Thanked the customer for their patronage and invited back. | ____ | ____ |
| - Serviced the customer promptly and courteously at all times. | ____ | ____ |

GUIDE SHEET

DUTY: Maintaining Customer Service

---

PERFORMANCE OBJECTIVE #22

TASK: Troubleshooting customer problems.

STANDARD OF PERFORMANCE OF TASK:

Probable cause/problem must be determined and a course of action taken.

SOURCE OF STANDARD:

Writing team of incumbent workers.

CONDITIONS FOR PERFORMANCE OF TASK:

Customer problem
Service manuals
Trouble shooting charts
Schematics
Diagnostic routines

ENABLING OBJECTIVES:

1. Determine problem and course of action.

RESOURCES:

1. Art Margolis. Troubleshooting and Repairing Personal Computers. Tab Books Inc., Blue Ridge Summit, PA, 1983.
2. Stephenson & Cahill. How To Maintain and Service Your Small Computer. Howard W. Sams & Co., Inc., Indianapolis, IN, 1983.
3. Art Margolis. Computer Technician's Handbook 2nd Edition. Tab Book Inc., Blue Ridge Summit. PA, 1985.
4. Manufacturer's operator manual
5. Manufacturer's service manual.
6. Manufacturer's technical reference manual.
7. Troubleshooting charts.
8. Manufacturer's schematics
9. Computer Facts. Howard W. Sams & Co., Inc., Indianapolis, IN.
10. Diagnostic equipment & routines.
11. Checklist - Determine problem and course of action.

TEACHING ACTIVITIES;

1. Present a lecture on troubleshooting procedures and techniques. (#1,2,3,5 & 9)
2. Discuss manufacturers operator,service and technical manuals.
3. Discuss troubleshooting charts
4. Discuss schematics.
5. Discuss diagnostic equipment & routines.
6. Demonstrate the different methods and procedures for troubleshooting computer equipment.
7. Assign the student a piece of computer equipment with a known problem and have the student troubleshoot it.
8. Conduct a question and answer session on the methods, procedures, and techniques for troubleshooting computer equipment.
9. Instruct the student to troubleshoot a piece of computer equipment based on the customer's complaint, troubleshooting charts, schematics, technical manuals and diagnostic equipment and routines. (#11)

CRITERION-REFERENCED MEASURE:

The student will identify the customer complaint and determine the probable cause and course of action to be taken, using troubleshooting charts, schematics,technical manuals and diagnostic equipment and routines.

PERFORMANCE GUIDE:

1. Listen to symptom/problem, as related by the operator.
2. Consult knowledge, manuals, charts, etc., for probable cause.
3. Diagnose problem for machine malfunction or operator error.
4. Suggest to operator a course of action for solving operator error.
5. Perform necessary repairs for machine malfunction.

DUTY Maintaining Customer Service

TASK Trouble shooting customer problems.

ENABLER Determine problem and course of action.

STUDENT'S NAME _____ DATE _____

EVALUATOR'S NAME _____ COURSE _____

TIME : STARTED _____ COMPLETED _____

TOTAL _____

DIRECTIONS TO THE EVALUATOR:

Use the following checklist to evaluate student performance while troubleshooting customer problems.

| PERFORMANCE DETERMINANTS | YES | NO |
|---|---|---|
| The preparer | | |
| - Identified the customer problem. | ____ | ____ |
| - Consulted knowledge, technical manuals, troubleshooting charts, schematics and diagnostic equipment/routines for a probable. | ____ | ____ |
| - Diagnosed the problem as either a machine malfunction or an operator error. | ____ | ____ |
| - Identified a course of action to solve the problem. | ____ | ____ |
| - Followed the course of action. | ____ | ____ |
| - Course of action solved the problem. | ____ | ____ |

GUIDE SHEET

DUTY: Maintaining Customer Service

---

PERFORMANCE OBJECTIVE #23

TASK: Determine repair method.

STANDARD OF PERFORMANCE OF TASK:

Repair method will provide most efficient, thorough repair of customer equipment.

SOURCE OF STANDARD:

Writing team of incumbent workers.

CONDITIONS FOR PERFORMANCE OF TASK:

Customer equipment
Service manuals
Customer complaint/problem
Service knowledge

ENABLING OBJECTIVES:

1. Identify most efficient repair method.

*RESOURCES:

1. Art Margolis. Troubleshooting and Repairing Personal Computers.
2. Stephenson & Cahill. How to Maintain and Service Your Small Computer. Howard W. Sams& Co., Inc., Indianapolis, IN, 1983.
3. Art Margolis. Computer Technician's Handbook, 2nd Edition. Tab Books Inc., Blue Ridge Summit, PA, 1985.
4. Manufacturer's Operator's Manual.
5. Computer Facts. Howard W. Sams & Co., Inc., Indianapolis, IN.
6. Manufacturer's operator's manual.
7. Manufacturer's DOS manual.
8. Manufacturer's technical reference.
9. Manufacturer's service manual.
10. Checklist - Identify most efficient repair method.

TEACHING ACTIVITIES:

1. Present lecture on determining most efficient repair method. (*1,2 & 3)

TEACHING ACTIVITIES: (cont.)

2. Discuss resources for identifying probable repair methods.
3. Discuss procedures for determining most efficient repair method.
4. Compare several repair method and demonstrate how to determine the most efficient repair methods.
5. Conduct a question and answer session on components of efficient repair methods vs. inefficient methods.
6. Instruct student to compare several repair methods and determine which is most efficient. (*10)

CRITERION-REFERENCE MEASURE:

The student will identify possible repair methods, determine the most efficient repair method and take action based on that method.

PERFORMANCE GUIDE:

1. Obtain customer equipment.
2. Determine customer complaint/problem.
3. Determine most efficient repair method.
4. Take action on repair method decided on.

CHECKLIST

DUTY Maintaining Customer Service

TASK Determine repair method.

ENABLER Identify most efficient repair method.

STUDENT'S NAME _____ DATE _____

EVALUATOR'S NAME _____ COURSE _____

TIME : STARTED _____ COMPLETED _____

TOTAL _____

DIRECTIONS TO THE EVALUATOR:

Use the following checklist to evaluate student performance while identifying the most efficient repair method.

| PERFORMANCE DETERMINANTS | YES | NO |
|---|---|---|
| The preparer | | |
| - Identified the customer complaint/ problem. | ____ | ____ |
| - Determined the probable problem. | ____ | ____ |
| - Determined all possible repair methods. | ____ | ____ |
| - Determined the repair methods. | ____ | ____ |
| - Determined the most efficient repair method. | ____ | ____ |
| - Took action based on the most efficient repair method. | ____ | ____ |

GUIDE SHEET

DUTY: Maintaining Customer Service

---

PERFORMANCE OBJECTIVE #24

TASK: Demonstrate computer equipment functions at store.

STANDARD OF PERFORMANCE OF TASK:

Participants will be shown how computer equipment functions, and be allowed to operate equipment themselves.

SOURCE OF STANDARD:

Writing team of incumbent workers.

CONDITIONS FOR PERFORMANCE OF TASK:

Equipment to be demonstrated
Operation/reference manuals
Place for demonstration
Software

ENABLING OBJECTIVES:

1. Conduct a demonstration of computer equipment, software functions.
2. Assemble equipment, materials & supplies.

*RESOURCES:

1. Manufacturer's operator's manual.
2. Manufacturer's DOS manual.
3. Manufacturer's technical reference.
4. Manufacturer's programming manual.
5. Supporting software.
6. Equipment/software catalogs and informational pamphlets.
7. Checklist - Conduct a demonstration of computer equipment/ software function.

TEACHING ACTIVITIES:

1. Present lecture on organizing a computer equipment/software demonstration.
2. Discuss determining customer's requirements.

TEACHING ACTIVITIES: (cont.)

3. Discuss assembling needed equipment, materials and supplies.
4. Discuss test running equipment and reviewing operating manuals.
5. Discuss arranging a time and place and notifying the participants.
6. Present a lecture on presenting an in store demonstration.
7. Discuss equipment/software functions.
8. Discuss operating procedures.
9. Discuss how the computer/software can meet the customer needs.
10. Show the customer how the equipment/software operates and meet their needs.
11. Demonstrate to the student how to present an in store demonstration.
12. Conduct a question and answer session concerning setting up and presenting an in store demonstration.
13. Instruct the student to set up and present an in store computer equipment software demonstration.

CRITERION REFERENCE -MEASURED:

The student will arrange a demonstration time and place, assemble the necessary computer equipment/software and present an in store, hands on demonstration of computer equipment based on the customers needs.

PERFORMANCE GUIDE:

1. Assemble required equipment, materials, and supplies.
2. Test run equipment.
3. Set time and place for demonstration.
4. Notify participants.
5. Review manuals.
6. Determine customer needs/requiremants.
7. Identify parts of equipment for participants.
8. Demonstrate how the equipment could be used.
9. Discuss optional uses of equipment.
10. Discuss precautions pertaining to normal operating procedures.
11. Demonstrate complete sequence of steps in perfomance of typical operations.
12. Explain use of operation manual for unusual procedures or trouble shooting strategies.
13. Answer any questions and allow participants to operate equipment under direct supervision.
14. Obtain contact name for future contact by phone.

CHECKLIST

DUTY Maintaining Customer Service

TASK Demonstrate computer equipment functions at store.

ENABLER Conduct a demonstration of computer equipment/ software functions.

STUDENT'S NAME _____ DATE _____

EVALUATOR'S NAME _____ COURSE _____

TIME : STARTED _____ COMPLETED _____

TOTAL _____

DIRECTIONS TO THE EVALUATOR:

Use the following checklist to evaluate student performance while conducting a demonstration of computer equipment/software functions.

| PERFORMANCE DETERMINANTS | YES | NO |
|---|---|---|
| The preparer | | |
| - Determine the customer's needs/ requirements. | ____ | ____ |
| - Assembled all required materials, supplies, and equipment/software. | ____ | ____ |
| - Demonstrated the equipment test. | ____ | ____ |
| - Reviewed the operator's manuals. | ____ | ____ |
| - Identified a time and place for the demonstration. | ____ | ____ |
| - Notified all participants well in advance of the demonstration. | ____ | ____ |
| - Demonstrated the possible customer uses. | ____ | ____ |
| - Allowed the participants hands on experience with the computer equipment software. | ____ | ____ |
| - Answered all participants questions promptly and courteously. | ____ | ____ |
| - Provided participants with informational pamphlets and catalogs. | ____ | ____ |

GUIDE SHEET

DUTY: Maintaining Customer Service

---

PERFORMANCE OBJECTIVE #25

TASK: Demonstrate software functions.

STANDARD OF PERFORMANCE OF TASK:

Demonstration will show how the software works and meets customer needs.

SOURCE OF STANDARD:

Writing team of incumbent workers.

CONDITIONS FOR PERFORMANCE OF TASK:

Software
Software documentation
Central processing unit
Disk drive
Printer
Monitor
Customer needs information

ENABLING OBJECTIVES:

1. Identify customer needs.
2. Determine software to be demonstrated.
3. Present software functions demonstration.

*RESOURCES:

1. Manufacturer's operator's manual.
2. Manufacturer's technical reference manual.
3. Manufacturer's programming manual.
4. Software catalogs and informational pamphlets.

TEACHING ACTIVITIES:

1. Present lecture on presenting a demonstration. (*1,2,3 & 4)
2. Discuss determining customer's requirements.
3. Discuss assembling needed software and equipment.
4. Discuss test running software and reviewing operators manual.
5. Discuss arranging a time and place for the demonstration and notify the participants.

TEACHING ACTIVITIES: (cont.)

6. Discuss and demonstrate how to present a software demonstration.
7. Instruct student to demonstrate software functions.

CRITERION-REFERENCED MEASURE:

The student will arrange a demonstration, time and place, assemble the necessary computer equipment, computer software and demonstrate software functions.

PERFORMANCE GUIDE:

1. Determine customer software needs.
2. Select software which meets needs of customer.
3. Operate software for customer so they can see how software works and how it can meet their needs.
4. Operate software following instruction.

CHECKLIST

DUTY Maintaining Customer Service

TASK Demonstrate software functions.

ENABLER Present software functions demonstration.

STUDENT'S NAME _____ DATE _____

EVALUATOR'S NAME _____ COURSE _____

TIME : STARTED _____ COMPLETED _____

TOTAL _____

DIRECTIONS TO THE EVALUATOR:

Use the following checklist to evaluate software functions demonstration.

| PERFORMANCE DETERMINANTS | YES | NO |
|---|---|---|
| The preparer | | |
| - Arranged a time and place for the demonstration. | ____ | ____ |
| - Determined customer software needed. | ____ | ____ |
| - Selected software which meets customer needs. | ____ | ____ |
| - Assembled necessary software and equipment. | ____ | ____ |
| - Demonstrated software functions. | ____ | ____ |
| - Instructed customer in operating software. | ____ | ____ |

GUIDE SHEET

DUTY: Installing Computer Equipment

---

PERFORMANCE OBJECTIVE #26

TASK: Determine customer requirements.

STANDARD OF PERFORMANCE OF TASK:

Customer requirements will include equipment, software, service contracts, and warranties based on customer needs.

SOURCE OF STANDARD:

Writing team of incumbent workers.

CONDITIONS FOR PERFORMANCE OF TASK:

Customer needs information
System layout plan

ENABLING OBJECTIVES:

1. Identify customer requirements.

*RESOURCES:

1. Computer equipment information.
2. Software information.
3. Service contract information.
4. Equipment warrant information.

TEACHING ACTIVITIES:

1. Present lecture on types of customer requirements.
2. Discuss and demonstrate computer equipment and software needs.
3. Discuss service contracts and warranty information.
4. Discuss communication skills needed to interpret and answer customer question.
5. Instruct student to practice determining customers requirements.
6. Assign student to practice determining customer requirements by role playing.
7. Instruct student to determine customer requirements.

CRITERION-REFERENCED MEASURE:

The student will determine customer requirements including equipment, software, service contracts and warranties.

PERFORMANCE GUIDE:

1. Determine customer needs.
2. Determine equipment, software, service contracts, warranties, etc. needed to meet customer needs.
3. Suggest requirements to customer.

CHECKLIST

DUTY Maintaining Customer Service

TASK Determine customer requirements.

ENABLER Identify customer needs.

STUDENT'S NAME _____ DATE _____

EVALUATOR'S NAME _____ COURSE _____

TIME STARTED _____ COMPLETED _____

TOTAL _____

DIRECTIONS TO THE EVALUATOR:

Use the following checklist to evalute determining customer requirements.

| PERFORMANCE DETERMINANTS | YES | NO |
|---|---|---|
| The preparer | | |
| - Identified customer's needs. | ____ | ____ |
| - Determined equipment needed. | ____ | ____ |
| - Determined software needed. | ____ | ____ |
| - Identified and explained applicable warranties. | ____ | ____ |
| - Determined type of service contract needed. | ____ | ____ |
| - Suggested requirements based on customer needs. | ____ | ____ |

GUIDE SHEET

DUTY: Installing Computer Equipment

---

PERFORMANCE OBJECTIVE #27

TASK: Design system layout.

STANDARD OF PERFORMANCE OF TASK:

System layout must provide for working space, maximum utilization of space with minimum conjestion, and comply with safety regulations.

SOURCE OF STANDARD:

Writing team of incumbent workers.

CONDITIONS FOR PERFORMANCE OF TASK:

Pen/pencil
Graph paper
Ruler
Scissors
Office requirements information

ENABLING OBJECTIVES:

1. Identify customer's needs.
2. Determine needed work space, safety regulations and utilization of space.

*RESOURCES:

1. Office requirements information.
2. Office space diagram.
3. Computer equipment list.
4. Computer equipment specification sheets.
5. Checklist - System layout design.

TEACHING ACTIVITIES:

1. Present lecture on designing a system layout plan. (*1,2,3 & 4)
2. Discuss and demonstrate how to make a scale diagram of the office space.
3. Discuss and demonstrate reviewing work flow, traffic patterns, electrical and phone requirements and environmental needs.

TEACHING ACTIVITIES: (cont.)

4. Discuss and demonstrate "cutout" method of determining best equipment location.
5. Discuss and demonstrate drawing final system layout design.
6. Assign student a list of office requirement computer equipment list and equipment specification sheets.
7. Instruct student to design a system layout plan.

CRITERION-REFERENCED MEASURE:

The student will design a system layout plan. The layout plan must provide maximum utilization of work space, comply with safety regulations and meet equipment requirements.

PERFORMANCE GUIDE:

1. Diagram office space to scale.
2. Review work flow characteristics, traffic patterns, electrical and telephone needs, and environmental requirements.
3. Identify kinds of equipment and furniture needed.
4. Prepare cardboard cutouts of office equipment and furniture to scale.
5. Arrange cutouts on the scale diagram.
6. Indicate traffic patterns, work areas, electical, telephone, and future expansion needs, and environmental controls on diagram.

CHECKLIST

DUTY Installing computer equipment

TASK Design system layout.

ENABLER Determine needed work space, safety regulations and utilization of space.

STUDENT'S NAME _____ DATE _____

EVALUATOR'S NAME _____ COURSE _____

TIME : STARTED _____ COMPLETED _____
TOTAL _____

DIRECTIONS TO THE EVALUATOR:

Use the following checklist to evaluate system lay-out design.

| PERFORMANCE DETERMINANTS | YES | NO |
|---|---|---|
| The preparer | | |
| - Obtained office requirement information sheets. | ____ | ____ |
| - Diagramed office space to scale. | ____ | ____ |
| - Identified work flow characteristics, traffic patterns, electrical and enviromental needs. | ____ | ____ |
| - Identified types of equipment and furniture needed. | ____ | ____ |
| - Arranged equipment and furniture figures on scale diagram. (could be cut out or on computer. | ____ | ____ |
| - Identified best office arrangement. | ____ | ____ |
| - Summited proposal to customer for approval. | ____ | ____ |

GUIDE SHEET

DUTY: Installing Computer Equipment

---

PERFORMANCE OBJECTIVE #28

TASK: Transport equipment.

STANDARD OF PERFORMANCE OF TASK:

Equipment will be packaged, loaded, transported from store to customer site and unloaded for installation.

SOURCE OF STANDARD:

Writing team of incumbent workers.

CONDITIONS FOR PERFORMANCE OF TASK:

Equipment to be transported
Packing materials
Truck or van
Customer address

ENABLING OBJECTIVES:

1. Package computer equipment for transporting to customer site.
2. Load and transport computer equipment to customer site.
3. Unload computer equipment at customer site.

*RESOURCES:

1. Equipment packing requirement information.
2. Packing materials usage instructions.
3. Checklist - Equipment transport.

TEACHING ACTIVITIES:

1. Present lecture on types of transportation preparation.
2. Discuss and demonstrate computer equipment internal preparation including securing read/write/verify head, securing carriage assembly, disconnecting peripheral cables and removing language and peripheral cards from slots.

TEACHING ACTIVITIES: (cont.)

3. Discuss and demonstrate computer equipment external preparation including anti-static bags, styrofoam support blocks, impact absorbent packing materials, and shipping crates and boxes.
4. Present lecture on loading and transporting computer equipment.
5. Discuss safety considerations for loading and transporting computer equipment.
6. Discuss and demonstrate computer equipment loading and transporting procedures.
7. Instruct student to practice packing, loading and transporting computer equipment.
8. Assign student computer equipment, packing materials and transportation.
9. Instruct student to transport equipment to customer site.

CRITERION-REFERENCED MEASURE:

The student will package, load and transport the computer equipment from the store location to the customer site. Transportation of equipment must be completed without damage to any computer equipment components.

PERFORMANCE GUIDE:

1. Prepare equipment for transportation:
   A. Internal preparation.
   B. External preparation.
2. Gather equipment to be transported.
3. Package equipment to avoid damage.
   CAUTION: Follow manufacturers safety precautions for transporting equipment.
4. Load equipment into truck or van.
5. Transfer equipment to site.
6. Unload equipment at site.

CHECKLIST

DUTY Installing Computer Equipment

TASK Transport equipment.

ENABLER Equipment will be packaged, loaded transported from stored to customer site and unloaded for installation.

STUDENT'S NAME _____ DATE _____

EVALUATOR'S NAME _____ COURSE _____

TIME : STARTED _____ COMPLETED _____

TOTAL _____

DIRECTIONS TO THE EVALUATOR:

Use the following checklist to evaluate student performance while transporting equipment.

RECORD THIS INFORMATION:

MANUFACTURER: _____ MODEL: _____

SERIAL #: _____

| PERFORMANCE DETERMINANTS | YES | NO |
|---|---|---|
| The preparer | | |
| - Prepared equipment for transportation. | ____ | ____ |
| - Gathered equipment to be transported. | ____ | ____ |
| - Packaged equipment to avoid damage. | ____ | ____ |
| - Loaded equipment into truck or van. | ____ | ____ |
| - Transferred equipment to site. | ____ | ____ |
| - Unloaded equipment at site. | ____ | ____ |

GUIDE SHEET

DUTY: Installing Computer Equipment

---

PERFORMANCE OBJECTIVE #29

TASK: Set up equipment.

STANDARD OF PERFORMANCE OF TASK:

Set up equipment at customer site according to specifications in system layout plan

SOURCE OF STANDARD:

Writing team of incumbent workers.

CONDITIONS FOR PERFORMANCE OF TASK:

Equipment to be set up
System layout and plan
Tool kit
Truck or van

ENABLING OBJECTIVES:

1. Interpret system layout plan.
2. Install computer equipment on site.

*RESOURCES:

1. Manufacturer's operator's manual.
2. Manufacturer's DOS manual.
3. Manufacturer's technical reference.
4. Manufacturer's service manual.
5. Manufacturer's installation manual.
6. Checklist - Equipment set up.

TEACHING ACTIVITIES:

1. Present lecture on setting up equipment on site. (*1,2,3,& 4)
2. Discuss and demonstrate unpacking procedures.
3. Discuss and demonstrate determining equipment location using system layout plan.
4. Discuss and demonstrate safety precautions and considerations for setting up equipment.
5. Discuss and demonstrate checking electrical requirements before installing equipment.

TEACHING ACTIVITIES: (cont.)

6. Discuss and demonstrate equipment set up procedures.
7. Demonstrate procedure for double checking equipment location and requirements to system layout and manufacturers specifications.
8. Instruct student to practice equipment set up procedures.
9. Assign student computer equipment to be set up, a system layout and manufacturers specifications.
10. Instruct student to set up the computer equipment.

CRITERION-REFERENCED MEASURE:

The student will set up the computer equipment on site according to system layout plan and manufacturers specifications.

PERFORMANCE GUIDE:

1. Unpack equipment at site.
2. Check system layout plan for equipment specifications and location.
   CAUTION: Check electrical requirements according to manufacturers specifications.
3. Assemble equipment.
4. Double check equipment set up with system layout plan for errors.

CHECKLIST

DUTY Installing Computer Equipment

TASK Set up equipment.

ENABLER Set up equipment at customer site according to specifications in system layout plan.

STUDENT'S NAME _____ DATE _____

EVALUATOR'S NAME _____ COURSE _____

TIME : STARTED _____ COMPLETED _____

TOTAL _____

DIRECTIONS TO THE EVALUATOR:

Use the following checklist to evaluate student performance while setting up equipment.

RECORD THIS INFORMATION:

MANUFACTURER: _____ MODEL: _____

SERIAL #: _____

| PERFORMANCE DETERMINANTS | YES | NO |
|---|---|---|
| The preparer | | |
| - Unpacked equipment at site. | ____ | ____ |
| - Checked system layout plan for equipment specifications and locations. | ____ | ____ |
| - Checked electrical requirements. | ____ | ____ |
| - Assembled equipment. | ____ | ____ |
| - Double checked equipment set up with system layout plan for errors. | ____ | ____ |

GUIDE SHEET

DUTY: Installing Computer Equipment

---

PERFORMANCE OBJECTIVE #30

TASK: Perform installation tests

STANDARD OF PERFORMANCE OF TASK:

Newly installed equipment must insure that central processing unit, peripherals, and software are functioning

SOURCE OF STANDARD:

Writing team of incumbent workers.

CONDITIONS FOR PERFORMANCE OF TASK:

Diagnostic disk
C.P.U. layout
Monitor
Disk drive
Printer
Newly installed equipment

ENABLING OBJECTIVES:

1. Test newly installed equipment to insure that central processing unit, peripherals and software are functioning correctly.

*RESOURCES:

1. Manufacturer's operator's manual.
2. Manufacturer's DOS manual.
3. Manufacturer's technical reference.
4. Manufacturer's service manual.
5. Manufacturer's installation manual.
6. Checklist - Installation tests.

TEACHING ACTIVITIES:

1. Present lecture on installation testing procedures. (*1,2,3,4 & 5)
2. Discuss and demonstrate testing procedures for the central processing unit, peripherals and software.
3. Discuss and demonstrate test run installation testing.

TEACHING ACTIVITIES: (cont.)

4. Discuss and demonstrate diagnostic disk installation testing.
5. Instruct student to practice installation testing procedures.
6. Assign student to practice installation testing procedures.
7. Instruct student to perform installation tests.

CRITERION-REFERENCED MEASURE:

The student will perform installation test in newly installed computer equipment. All equipment must operate without error.

PERFORMANCE GUIDE:

1. Check all connections.
2. Power up system.
3. Test run central processing unit, peripherals and software.
4. Run diagnostic program when a problem is encountered
5. Power down system.

CHECKLIST

DUTY Installing Computer Equipment.

TASK Perform installation tests.

ENABLER Newly installed equipment must insure that central processing unit peripherals, and software are functioning.

STUDENT'S NAME _____ DATE _____

EVALUATOR'S NAME _____ COURSE _____

TIME : STARTED _____ COMPLETED _____

TOTAL _____

DIRECTIONS TO THE EVALUATOR:

Use the following checklist to eva .ate student performance while performing installation tests.

RECORD THIS INFORMATION:

MANUFACTURER: _____ MODEL: _____

SERIAL #: _____

| PERFORMANCE DETERMINANTS | YES | NO |
|---|---|---|
| The preparer | | |
| - Checked all connections. | ____ | ____ |
| - Powered up system. | ____ | ____ |
| - Ran tests on central processing unit. | ____ | ____ |
| - Ran tests on peripheral and software. | ____ | ____ |
| - Ran diagnostic program when a problem is encountered. | ____ | ____ |
| - Powered down system. | ____ | ____ |

GUIDE SHEET

DUTY: Installing Computer Equipment

---

PERFORMANCE OBJECTIVE #31

TASK: Demonstrate usage of system on site.

STANDARD OF PERFORMANCE OF TASK:

Operator will be shown the usage of newly installed system including powering up system, loading and running software, safety features, general care and maintenance, and how to use operator manuals.

SOURCE OF STANDARD:

Writing team of incumbent workers.

CONDITIONS FOR PERFORMANCE OF TASK:

On-site equipment
Necessary software
Working knowledge of system
Operator manuals
Personnel to be operating the system

ENABLING OBJECTIVES:

1. Determine computer system to be identified.
2. Identify and review equipment and software to be used.
3. Present a operational demonstration of the systems functions on site.

*RESOURCES:

1. Manufacturer's operator's manual.
2. Manufacturer's DOS manual.
3. Manufacturer's technical reference.
4. Manufacturer's programming manual.
5. Software instruction manual.
6. Demonstrator's notes on key functions, features and procedures.
7. Checklist - On site system usage demonstration.

TEACHING ACTIVITIES:

1. Present lecture on conducting an on site system usage demonstration. (*1,2,3,4,5 & 6)

TEACHING ACTIVITIES: (cont.)

2. Discuss methods for scheduling demonstration and contacting participants.
3. Discuss acceptable behavior and etiquette when visiting a on site location.
4. Discuss and demonstrate procedure for presenting a system operational demonstration including powering up the system, key features of the system and software functions.
5. Discuss how to conduct a participant question and answer session.
6. Discuss and demonstrate methods for conducting a hands on demonstration.
7. Assign a role playing activity were students take turns being the participant and the demonstrator.
8. Conduct a question and answer session allowing students to interact and offer each other suggestions based on the role playing assignment.
9. Instruct student to present a on site system usage demonstration.

CRITERION-REFERENCED MEASURE:

The student will schedule a on site demonstration, contact the demonstration participants, demonstrate key features, functions and procedures including, powering up system, loading and running software, safety features, general care and maintenance and use of the operator manual.

PERFORMANCE GUIDE:

1. Gather key personnel and operators together for demonstration.
2. Name specific key equipment, documentation, parts, and their functions.
3. Power up system and demonstrate operational procedures, key features and software functions.
4. Ask for and answer any questions.
5. Have operators try using system.
6. Run through the procedures with operator performing the physical tasks.
7. Ask for and answer questions.
8. Leave a business card or phone number to call in case of problems.
9. Obtain name of key person to contact.
10. Return periodically to check system operation and operators' progress.

CHECKLIST

DUTY Installing computer equipment

TASK Demonstrate usage of system on site.

ENABLER Present a operational demonstration of the systems functions on site.

STUDENT'S NAME _____ DATE _____

EVALUATOR'S NAME _____ COURSE _____

TIME : STARTED _____ COMPLETED _____

TOTAL _____

DIRECTIONS TO THE EVALUATOR:

Use the following checklist to evaluate system usage demonstration.

| PERFORMANCE DETERMINANTS | YES | NO |
|---|---|---|
| The preparer | | |
| - Scheduled a on site demonstration. | ____ | ____ |
| - Contacted the demonstration participants. | ____ | ____ |
| - Identified key equipment, documentation parts and their functions. | ____ | ____ |
| - Powered up the system and demonstrated operational procedures, key features and software functions. | ____ | ____ |
| - Conducted a question and answer session. | ____ | ____ |
| - Instructed operators to try using the system. | ____ | ____ |
| - Aided the operator with physical task. | ____ | ____ |
| - Conducted a final question and answer session. | ____ | ____ |
| - Provided a business card or contact number in case of problems. | ____ | ____ |
| - Obtained name of contact person. | ____ | ____ |

GUIDE SHEET

DUTY: Installing Computer Equipment

---

PERFORMANCE OBJECTIVE #32

TASK: Complete warranty cards.

STANDARD OF PERFORMANCE OF TASK:

Warranty card information must include type of machine, date purchased, copy of sales receipt, length of warranty, serial number, owner, and dealer.

SOURCE OF STANDARD:

Writing team of incumbent workers.

CONDITIONS FOR PERFORMANCE OF TASK:

Pen/Pencil
Typewriter
Equipment information
Warranty cards

ENABLING OBJECTIVES:

1. Obtain warranty information.
2. Fill out warranty card.

*RESOURCES:

1. Manufacturer's operator's manual.
2. Manufacturer's service manual.
3. Warranty card instruction sheet.
4. Warranty contract.
5. Checklist - Warranty card completion.

TEACHING ACTIVITIES:

1. Present lecture on sources for obtaining warranty card information.
2. Discuss obtaining information from operator manual, sales receipt, equipment I.D. tags/plates, customer and manufacturer.
3. Present lecture on the procedure for completing a warranty card. (*1,2,3 & 4)
4. Discuss and demonstrate procedure for filling in warranty information.

TEACHING ACTIVITIES: (cont.)

5. Discuss and demonstrate process for summiting warranty to the manufacturer.
6. Instruct student to practice completing a warranty card.
7. Assign the student warranty information and a blank warranty card.
8. Instruct student to complete the warranty card.

CRITERION-REFERENCED MEASURE:

The student will obtain warranty information and warranty card including type of machine, date purchased, copy of sales receipt, type and length of warranty, equipment model/serial number and the owners and dealers names and addresses.

PERFORMANCE GUIDE:

1. Obtain warranty cards for new equipment installed
2. Fill in warranty information:
   A. Type of equipment.
   B. Model number/make and serial number.
   C. Purchase date.
   D. Warranty type and length.
   E. Name and address of owner.
   F. Name and address of dealer.
   G. Extra extended warranty or service contracts.
3. Return warranty card to manufacturer.

CHECKLIST

DUTY Installing computer equipment

TASK Complete warranty card.

ENABLER Fill out warranty card.

STUDENT'S NAME _____ DATE _____

EVALUATOR'S NAME _____ COURSE _____

TIME : STARTED _____ COMPLETED _____

TOTAL _____

DIRECTIONS TO THE EVALUATOR:

Use the following checklist to evaluate filling out warranty cards.

| PERFORMANCE DETERMINANTS | YES | NO |
|---|---|---|
| The preparer | | |
| - Obtained warranty information. | ____ | ____ |
| - Recorded type of equipment. | ____ | ____ |
| - Recorded model/serial number. | ____ | ____ |
| - Recorded purchase date. | ____ | ____ |
| - Recorded warranty type and length. | ____ | ____ |
| - Recorded name and address of owner. | ____ | ____ |
| - Recorded name and address of dealer. | ____ | ____ |
| - Recorded extended warranties or service contacts. | ____ | ____ |
| - Returned warranty card to manufacturer. | ____ | ____ |

GUIDE SHEET

DUTY: Installing Computer Equipment

---

PERFORMANCE OBJECTIVE #33

TASK: Construct cables.

STANDARD OF PERFORMANCE OF TASK:

Constructed cable must be the correct length and have the needed gender connection.

SOURCE OF STANDARD:

Writing team of incumbent workers.

CONDITIONS FOR PERFORMANCE OF TASK:

Cable wire
Ruler
Tool kit
Gender connection changes

ENABLING OBJECTIVES:

1. Identify type of cable needed.
2. Identify gender connection.
3. Determine wiring configuration.
4. Assemble cable.

*RESOURCES:

1. Stephenson and Cahill. How To Maintain and Service Your Small Computer. Howard W. Sams and Company, Inc., Indianapolis, IN, 1983.
2. Manufacturer's operator's manual.
3. Manufacturer's technical reference.
4. Manufacturer's service manual.
5. Checklist - Cable construction.

TEACHING ACTIVITIES:

1. Present lecture on types of cables.
2. Discuss and demonstrate types of cable wires.
3. Discuss and demonstrate types of gender connections used on cables.
4. Discuss and demonstrate different wiring configurations.

TEACHING ACTIVITIES: (cont.)

5. Present lecture on cable construction procedures. (#1,2,3 & 4)
6. Discuss and demonstrate determining cable wire type, configuration and length.
7. Discuss and demonstrate cable wire cutting procedure.
8. Discuss and demonstrate selecting and fastening gender connections.
9. Instruct student to practice constructing cables.
10. Assign student a list of cable specification and cable construction materials.
11. Instruct student to construct a cable to specifications.

CRITERION-REFERENCED MEASURE:

The student will determine cable specifications and construct a cable to meet those specifications. The cable must be the correct length and have the correct wiring configuration, wire type and gender connections.

PERFORMANCE GUIDE:

1. Determine type of cable wire needed:
   A. Cord
   B. Ribbon
2. Determine gender connection needed:
   A. Male connector
   B. Female connector
   C. Shape
3. Determine wiring configuration:
   A. Pin type
   B. Card type
   C. Jack type
4. Measure and cut needed length of cable wire.
5. Fasten gender connections to length of cable.

CHECKLIST

DUTY Installing computer equipment

TASK Construct cables.

ENABLER Assemble cable.

STUDENT'S NAME _____ DATE _____

EVALUATOR'S NAME _____ COURSE _____

TIME : STARTED _____ COMPLETED _____

TOTAL _____

DIRECTIONS TO THE EVALUATOR:

Use the following checklist to evaluate constructing cables.

| PERFORMANCE DETERMINANTS | YES | NO |
|---|---|---|
| The preparer | | |
| - Determined type of cable wire. | ____ | ____ |
| - Determined gender connection. | ____ | ____ |
| - Identified wiring configuration. | ____ | ____ |
| - Calculated cable length. | ____ | ____ |
| - Cut cable to proper length. | ____ | ____ |
| - Fastened gender connection to cable. | ____ | ____ |
| - Connected cable to equipment. | ____ | ____ |
| - Conducted an operational check. | ____ | ____ |

GUIDE SHEET

DUTY: Evaluating Diagnostics

---

PERFORMANCE OBJECTIVE #34

TASK: Conduct motherboard RAM (random access memory) test.

STANDARD OF PERFORMANCE OF TASK:

RAM integrated circuit on the motherboard and language card must be tested to determine and correct system operational problems; and must pass diagnostic test without errors.

SOURCE OF STANDARD:

Writing team of incumbent workers.

CONDITIONS FOR PERFORMANCE OF TASK:

Central processing unit
Disk drive
Diagnostic disks
Monitor
Pen/pencil
Note pad
Integrated circuit chip inserter
Integrated circuit chip remover
RAM integrated circuits
Technical/service manual

ENABLING OBJECTIVE:

1. Obtain diagnostic disk for programmer's aid test.
2. Determine if programmer's aid RAM is functioning correctly.

*RESOURCES:

1. Manufacturer's operator's manual.
2. Manufacturer's technical reference.
3. Manufacturer's service manual.
4. Checklist - RAM motherboard test

TEACHING ACTIVITIES:

1. Present lecture on programming aid diagnostic testing. (*1,2 & 3)

TEACHING ACTIVITIES: (cont.)

2. Discuss location and function of programmer's aid RAM.
3. Discuss and demonstrate safety precautions and considerations when testing programmer's aid RAM.
4. Present lecture on programmer's aid RAM diagnostic testing procedure.
5. Discuss and demonstrate loading and running programmer's aid test from diagnostic disk.
6. Instruct student to practice programmer's aid test from diagnostic testing procedures.
7. Assign student a computer system with programmer's aid installed and a diagnostic disk.
8. Instruct student to conduct a programmer's aid diagnostic disk.

CRITERION-REFERENCED MEASURE:

The student will conduct a programmer's aid diagnostic test. The programmer's aid RAM must pass diagnostic test without error.

PERFORMANCE GUIDE:

1. Power up system.
2. Insert diagnostic disk into disk drive and boot.
3. Load and run motherboard RAM test program.
4. Analyze RAM test results according to manufacturer specification.
5. Replace the bad integrated circuit if any RAM fails and run test again.
6. Exit test program and remove diagnostic disk from disk drive.
7. Power down system.

CHECKLIST

DUTY Evaluating Diagnostics

TASK Conduct motherboard RAM (random access memory) test.

ENABLER RAM integrated circuit on the motherboard and language card must be tested to determined and correct system operational problems; and must pass diagnostic test without errors.

STUDENT'S NAME _____ DATE _____

EVALUATOR'S NAME _____ COURSE _____

TIME : STARTED _____ COMPLETED _____

TOTAL _____

DIRECTIONS TO THE EVALUATOR:

Use the following checklist to evaluate student performance while conducting motherboard RAM test.

RECORD THIS INFORMATION:

MANUFACTURER: _____ MODEL: _____

SERIAL #: _____

| PERFORMANCE DETERMINANTS | YES | NO |
|---|---|---|
| The preparer | | |
| - Powered up system. | ____ | ____ |
| - Inserted and booted disk. | ____ | ____ |
| - Loaded and ran motherboard RAM test program. | ____ | ____ |
| - Analyzed RAM test results. | ____ | ____ |
| - Replaced malfunctioning integrated circuit. | ____ | ____ |
| - Removed disk from disk drive. | ____ | ____ |
| - Powered down system. | ____ | ____ |

GUIDE SHEET

DUTY: Evaluating Diagnostics

---

PERFORMANCE OBJECTIVE #35

TASK: Conduct motherboard ROM (read only memory)test.

STANDARD OF PERFORMANCE OF TASK:

ROM integrated circuit on the motherboard must be tested to determine and correct program operational problems and must pass diagnostic test without errors

SOURCE OF STANDARD:

Writing team of incumbent workers.

CONDITIONS FOR PERFORMANCE OF TASK:

Central processing unit
Disk drive
Diagnostic disks
Monitor
Pen/pencil
Note pad
Integrated circuit chip inserter
Integrated circuit chip remover
ROM integrated circuits

ENABLING OBJECTIVE:

1. Obtain diagnostic disk for motherboard ROM test.
2. Determine if motherboard ROM is functioning correctly.

*RESOURCES:

1. Manufacturer's operator's manual.
2. Manufacturer's technical reference manual.
3. Manufacturer's service manual.
4. Checklist - ROM motherboard test.

TEACHING ACTIVITIES:

1. Present lecture on programmer's aid diagnostic testing. (*1,2 & 3)
2. Discuss location and function of motherboard ROM.

TEACHING ACTIVITIES: (cont.)

3. Discuss and demonstrate safety precautions and considerations when testing motherboard ROM.
4. Present lecture on motherboard ROM diagnostic testing procedure.
5. Discuss and demonstrate loading and running motherboard ROM test from diagnostic disk.
6. Instruct student to practice motherboard ROM diagnostic testing procedures.
7. Assign student a computer system with motherboard ROM installed and a diagnostic disk.
8. Instruct student to conduct a motherboard ROM diagnostic test.

CRITERION-REFERENCED MEASURE:

The student will conduct a motherboard ROM diagnostic test. The motherboard ROM must pass diagnostic test without error.

PERFORMANCE GUIDE:

1. Power up system.
2. Insert diagnostic disk into disk drive and boot.
3. Load and run motherboard ROM test program.
4. Make note of the identity of any ROM integrated circuits that fail.
5. Replace the bad integrated circuit if any RAM fails and run test again.
6. Exit test program and remove diagnostic disk from disk drive.
7. Power down system.

CHECKLIST

DUTY Evaluating Diagnostics

TASK Conduct motherboard ROM (read only memory) test.

ENABLER ROM integrated circuit on the motherboard must be tested to determine and correct program operational problems and must diagnostic test without errors.

STUDENT'S NAME _____ DATE _____

EVALUATOR'S NAME _____ COURSE _____

TIME : STARTED _____ COMPLETED _____

TOTAL _____

DIRECTIONS TO THE EVALUATOR:

Use the following checklist to evaluate student performance while conducting motherboard ROM test.

RECORD THIS INFORMATION:

MANUFACTURER: _____ MODEL: _____

SERIAL #: _____

| PERFORMANCE DETERMINANTS | YES | NO |
|---|---|---|
| The preparer | | |
| - Powered up system. | ____ | ____ |
| - Inserted and booted disk. | ____ | ____ |
| - Loaded and ran motherboard ROM test program. | ____ | ____ |
| - Identified malfunctioning ROM integrated circuits. | ____ | ____ |
| - Replaced malfunctioning ROM integrated circuits. | ____ | ____ |
| - Conducted test run. | ____ | ____ |
| - Exited test program. | ____ | ____ |
| - Removed diagnostic disk from disk drive. | ____ | ____ |
| - Powered down system. | ____ | ____ |

GUIDE SHEET

DUTY: Evaluating Diagnostics

---

PERFORMANCE OBJECTIVE #36

TASK: Conduct programmers aid test

STANDARD OF PERFORMANCE OF TASK:

Programmers aid ROM must be tested to determine if it is malfunctioning and must pass diagnostic test free of errors.

SOURCE OF STANDARD:

Writing team of incumbent workers.

CONDITIONS FOR PERFORMANCE OF TASK:

Central processing unit
Disk drive
Diagnostic disks
Monitor
Pen/pencil
Paper
Integrated circuit chip inserter
Integrated circuit chip puller

ENABLING OBJECTIVE:

1. Obtain diagnostic disk for programmers aid test.
2. Determine if programmers aid ROM is functioning correctly.

*RESOURCES:

1. Manufacturer's operator's manual.
2. Manufacturer's technical reference manual.
3. Manufacturer's service manual.
4. Checklist - Programmers aid test.

TEACHING ACTIVITIES:

1. Present lecture on programmer's aid diagnostic testing. (*1,2 & 3)
2. Discuss location and function of programmer's aid ROM.

TEACHING ACTIVITIES: (cont.)

3. Discuss and demonstrate safety precautions and considerations when testing programmers aid ROM.
4. Present lecture on programmer's aid ROM diagnostic testing procedure.
5. Discuss and demonstrate loading and running programmer's aid test from diagnostic disk.
6. Instruct student to practice programmer's aid diagnostic testing procedures.
7. Assign student a computer system with programmers aid ROM installed and a diagnostic disk.
8. Instruct student to conduct a programmers aid diagnostic test.

CRITERION-REFERENCED MEASURE:

The student will conduct a programmer's aid diagnostic test. The programmers aid ROM must pass diagnostic test without error.

PERFORMANCE GUIDE:

1. Power up system.
2. Insert diagnostic disk into disk drive
3. Boot disk drive and load Programmers Aid Test.
4. Run programmers Aid Test.
5. Record diagnostic messages.
6. Replace ROM and run Programmer Aid Test again if it fails.

CHECKLIST

DUTY Evaluating Diagnostics

TASK Conduct programmers aid test.

ENABLER Programmers aid ROM must be tested to determine if it is malfunctioning and must pass diagnostic test free of errors.

STUDENT'S NAME _____ DATE _____

EVALUATOR'S NAME _____ COURSE _____

TIME : STARTED _____ COMPLETED _____

TOTAL _____

DIRECTIONS TO THE EVALUATOR:

Use the following checklist to evaluate student performance while conducting programmers aid test.

RECORD THIS INFORMATION:

MANUFACTURER: _____ MODEL: _____

SERIAL #: _____

| PERFORMANCE DETERMINANTS | YES | NO |
|---|---|---|
| The preparer | | |
| - Powered up system. | ____ | ____ |
| - Inserted disk into disk drive. | ____ | ____ |
| - Booted disk drive. | ____ | ____ |
| - Loaded Programmers Aid Test. | ____ | ____ |
| - Ran Programmers Aid Test. | ____ | ____ |
| - Recorded diagnostic messages. | ____ | ____ |
| - Replaced ROM. | ____ | ____ |
| - Ran Programmers Aid Test. | ____ | ____ |

GUIDE SHEET

DUTY: Evaluating Diagnostics

---

PERFORMANCE OBJECTIVE #37

TASK: Conduct keyboard test.

STANDARD OF PERFORMANCE OF TASK:

Keys on the keyboard, the keyboard encoder circuits and keyboard cable must be tested to determine if they are functioning and must pass diagnostic test without error.

SOURCE OF STANDARD:

Writing team of incumbent workers.

CONDITIONS FOR PERFORMANCE OF TASK:

Central processing unit
Disk drive
Diagnostic disks
Monitor
Pen/pencil
Paper

ENABLING OBJECTIVE:

1. Obtain diagnostic disk for conducting keyboard test.
2. Check key switches, keyboard cable and keyboard encoder circuits.

*RESOURCES:

1. Manufacturer's operator's manual.
2. Manufacturer's technical reference.
3. Manufacturer's service manual.
4. Checklist - Keyboard test.

TEACHING ACTIVITIES:

1. Present lecture on keyboard diagnostic testing. (*1,2 & 3)
2. Discuss keyswitch, keyboard cable and keyboard encoder circuitry test points.

TEACHING ACTIVITIES: (cont.)

3. Discuss and demonstrate safety precautions and considerations when testing a keyboard.
4. Present lecture on keyboard diagnostic testing procedures. (*1,2,3 & 4)
5. Discuss and demonstrate loading and running keyboard test program from diagnostic disk.
6. Discuss and demonstrate keyboard cable check.
7. Discuss and demonstrate keyswitch identification coding.
8. Instruct student to practice keyboard testing using a diagnostic disk.
9. Assign student a keyboard diagnostic disk.
10. Instruct student to conduct a keyboard diagnostic test.

CRITERION-REFERENCED MEASURE:

The student will conduct a keyboard diagnostic test. The keyboard must pass diagnostic test without error.

PERFORMANCE GUIDE:

1. Power up system.
2. Insert diagnostic disk into disk drive
3. Boot disk drive and load Keyboard Test Program.
4. Run Keyboard Test program.
5. Record keys which fail.
   NOTE: Check keyboard connection by unpluging and repluging before replacing keys or module, replace appropriate key or module and run the test again.
6. Power down system.

CHECKLIST

DUTY Servicing Computer Equipment.

TASK Conduct keyboard test.

ENABLER Keys on the keyboard, the keyboard encoder circuits and Keyboard cable must be tested to determine if they are functioning and must pass diagnostic test without error.

STUDENT'S NAME _____ DATE _____

EVALUATOR'S NAME _____ COURSE _____

TIME : STARTED _____ COMPLETED _____

TOTAL _____

DIRECTIONS TO THE EVALUATOR:

Use the following checklist to evaluate student performance while conducting keyboard test.

RECORD THIS INFORMATION:

MANUFACTURER: _____ MODEL: _____

SERIAL #: _____

| PERFORMANCE DETERMINANTS | YES | NO |
|---|---|---|
| The preparer | | |
| - Checked keyboard connections. | ____ | ____ |
| - Powered up system. | ____ | ____ |
| - Inserted diagnostic disk into disk drive. | ____ | ____ |
| - Booted disk drive. | ____ | ____ |
| - Loaded keyboard test program. | ____ | ____ |
| - Ran keyboard test program and noted any keys which fail. | ____ | ____ |
| - Powered down system. | ____ | ____ |

GUIDE SHEET

DUTY: Evaluating Diagnostics

---

PERFORMANCE OBJECTIVE #38

TASK: Conduct Game Paddle/Button Test

STANDARD OF PERFORMANCE OF TASK:

Game Paddles/buttons, and the circuitry on the motherboard that interfaces with the paddles/buttons must be tested and must pass diagnostic test without error.

SOURCE OF STANDARD:

Writing team of incumbent workers.

CONDITIONS FOR PERFORMANCE OF TASK:

Central processing unit
Disk drive
Diagnostic disks
Monitor
Game paddles/buttons

ENABLING OBJECTIVE:

1. Obtain diagnostic disk for conducting game paddel/button test.
2. Check game paddel buttons, game input/output sockets/parts and motherboard circuitry.

*RESOURCES:

1. Manufacturer's operator's manual.
2. Manufacturer's technical reference manual.
3. Manufacturer's service manual.
4. Checklist -- Game Paddle/Button Test.

TEACHING ACTIVITIES:

1. Present lecture on game paddle/button diagnostic testing. (*1,2 & 3)
2. Discuss game paddles/buttons, game input/output sockets/ports, and motherboard interfacing circuitry location and function.

TEACHING ACTIVITIES: (cont.)

3. Discuss and demonstrate safety precautions and considerations when testing a game paddle/button.
4. Present lecture on game paddel/button diagnostic testing procedures. (#1,2,3 & 4)
5. Discuss and demonstrate loading and running game paddle/button test program from diagnostic disk.
6. Discuss and demonstrate connecting game paddle/button unit to game port/socket.
7. Discuss and demonstrate rotating paddle through its entire range and pressing all paddle buttons.
8. Discuss and demonstrate "new" paddle/button test.
9. Instruct student to practice game paddle/button testing using a diagnostic disk.
10. Assign student a game paddle/button and diagnostic disk
11. Instruct student to conduct a game paddle/button diagnostic test.

CRITERION-REFERENCED MEASURE:

The student will conduct a game paddle/button diagnostic test.
The game paddle/button must pass diagnostic test without error.

PERFORMANCE GUIDE:

1. Connect game paddles to game input/output socket.
2. Power up system.
3. Insert diagnostic disk into disk drive.
4. Boot disk drive and load Game Paddle/button test.
5. Run test program.
6. Rotate paddle control through its entire range and press all paddle buttons.
   NOTE: If any part of test fails, replace paddle/button and run test again.
7. Power down system.

CHECKLIST

DUTY Evaluating Diagnostics

TASK Conduct paddle/button test.

ENABLER Check game paddle/buttons, game input/output sockets/parts, and motherboard circuitry.

STUDENT'S NAME _____ DATE _____

EVALUATOR'S NAME _____ COURSE _____

TIME : STARTED _____ COMPLETED _____

TOTAL _____

DIRECTIONS TO THE EVALUATOR:

Use the following checklist to evaluate student performance while conducting game/button test.

RECORD THIS INFORMATION:

MANUFACTURER: _____ MODEL: _____

SERIAL #: _____

| PERFORMANCE DETERMINANTS | YES | NO |
|---|---|---|
| The preparer | | |
| - Connected game paddles to game input/output socket. | ____ | ____ |
| - Powered up system. | ____ | ____ |
| - Inserted diagnostic disk into disk drive. | ____ | ____ |
| - Booted disk drive. | ____ | ____ |
| - Loaded Game Paddle/button test. | ____ | ____ |
| - Rotated paddle control through its entire range. | ____ | ____ |
| - Powered down system. | ____ | ____ |

GUIDE SHEET

DUTY: Evaluating Diagnostics

---

PERFORMANCE OBJECTIVE #39

TASK: Conduct tape read/write/verify test.

STANDARD OF PERFORMANCE OF TASK:

Media recorder, audio cables and circuitry on the motherboard that writes to and reads from a tape recorder must be tested and must pass diagnostic test without error.

SOURCE OF STANDARD:

Writing team of incumbent workers.

CONDITIONS FOR PERFORMANCE OF TASK:

Central processing unit
Disk drive
Diagnostic disks
Monitor
Pen/pencil
Note pad

ENABLING OBJECTIVE:

1. Obtain diagnostic disk for conducting tape read/write/verify test.
2. Check recorder unit, audio cables and motherboard circuitry.

*RESOURCES:

1. Manufacturer's operator's manual.
2. Manufacturer's technical reference manual.
3. Manufacturer's service manual.
4. Checklist - Tape read/write/verify test.

TEACHING ACTIVITIES:

1. Present lecture on tape read/write/verify diagnostic points. (#1,2 & 3)
2. Discuss medial recorder, audio cables and motherboard tape read/write/verify circuitry location and function.

TEACHING ACTIVITIES: (cont.)

3. Discuss and demonstrate safety precautions and considerations when testing a tape read/write/verify.
4. Present lecture on tape read/write/verify diagnostic testing procedures. (#1,2 & 3)
5. Discuss and demonstrate loading and running tape read/write/verify program from diagnostic disk.
6. Discuss and demonstrate readjusting recorder procedures.
7. Discuss and demonstrate a "new" system check.
8. Instruct student to practice tape read/write/verify testing using a diagnostic disk.
9. Assign student a tape read/write/verify and diagnostic disk.
10. Instruct student to conduct a tape read/write/verify diagnostic test.

CRITERION-REFERENCED MEASURE:

The student will conduct a tape read/write/verify diagnostic test. The media recorder must pass diagnostic test without error.

PERFORMANCE GUIDE:

1. Check the cable connections between the tape.
2. Power up system.
3. Place a scratch (expandable) tape in recorder and rewind.
4. Set the record and playback levels to mid-range.
5. Load diagnostic disk into drive and load tape read/write/verify test.
6. Run tape read/write/verify test.
7. Readjust the recorder if errors are indicated and run test again.
8. Check cables for continuity and shorts if errors still exist or try another recorder.
9. Run recorder on different system. If recorder works with new system, check motherboard on old system.
10. Exit tape read/write/verity program.
11. Remove diagnostic disk from disk drive and power down system.

CHECKLIST

DUTY Evaluating Diagnostics.

TASK Conduct tape read/write/verify test.

ENABLER Media recorder, audio cables and circuitry on the motherboard that writes to and reads from a tape recorder must be tested and must pass diagnostic test without error.

STUDENT'S NAME _____ DATE _____

EVALUATOR'S NAME _____ COURSE _____

TIME : STARTED _____ COMPLETED _____

TOTAL _____

DIRECTIONS TO THE EVALUATOR:

Use the following checklist to evaluate student performance when conducting tape read/write/verify test.

RECORD THIS INFORMATION:

MANUFACTURER: _____ MODEL: _____

SERIAL #: _____

| PERFORMANCE DETERMINANTS | YES | NO |
|---|---|---|
| The preparer | | |
| - Checked the cable connections between the tape. | ____ | ____ |
| - Powered up system. | ____ | ____ |
| - Replaced scratched tape and rewound. | ____ | ____ |
| - Set record and playback. | ____ | ____ |
| - Loaded diagnostic disk into disk drive. | ____ | ____ |
| - Loaded tape read/write/verify test. | ____ | ____ |
| - Readjusted the recorder if necessary. | ____ | ____ |
| - Checked cables for errors. | ____ | ____ |
| - Ran recording on different system. | ____ | ____ |
| - Removed tape read/write/verify program. | ____ | ____ |
| - Removed disk from disk drive. | ____ | ____ |
| - Powered down system. | ____ | ____ |

GUIDE SHEET

DUTY: Evaluating Diagnostics

---

PERFORMANCE OBJECTIVE #40

TASK: Conduct color bar test.

STANDARD OF PERFORMANCE OF TASK:

The monitor, video cable, and the motherboard video generating circuitry must be tested to determine and correct the cause of display problem and must pass diagnostic test without error.

SOURCE OF STANDARD:

Writing team of incumbent workers.

CONDITIONS FOR PERFORMANCE OF TASK:

| | |
|---|---|
| Central processing unit | Disk Drive |
| Diagnostic disks | Monitor |
| Video cable | Motherboard |
| Pen/pencil | Note pad |

Tweeking tools (non-metallic adjusting tools)

ENABLING OBJECTIVE:

1. Obtain diagnostic for conducting color bar test.
2. Match color bars to color codes.

*RESOURCES:

1. Manufacturer's operator's manual.
2. Manufacturer's technical reference.
3. Manufacturer's service manual.
4. Checklist - Color bar test.

TEACHING ACTIVITIES:

1. Present lecture on color bar diagnostic testing. (*1,2 & 3)
2. Discuss monitor, video cable, and motherboard video generating circuitry location and function.
3. Discuss and demonstrate safety precautions and considerations when testing a monitor.
4. Present lecture on color bar diagnostic testing procedures. (*1,2,3 & 4)

TEACHING ACTIVITIES: (cont.)

5. Discuss and demonstrate loading and running color bar test program from diagnostic disk.
6. Discuss and demonstrate matching color bars to color codes.
7. Discuss and demonstrate adjusting color trimmer capacitor.
8. Instruct student to practice color bar testing using a diagnostic disk.
9. Assign student a color monitor and diagnostic disk.
10. Instruct student to conduct a color bar diagnostic test.

CRITERION-REFERENCED MEASURE:

The student will conduct a color bar diagnostic test. The monitor must pass color bar test without error.

PERFORMANCE GUIDE:

1. Power up system.
2. Insert diagnostic disk into disk drive.
3. Load and run Color Bar test Program.
4. Review test usage information at the beginning of the test.
5. Match colors of color bars with corresponding color codes to verify that colors are correct.
6. Record changes made.
7. Adjust color trimmer capacitor if colors are incorrect.
8. Connect a different monitor or video cable if correct colors cannot be obtained and run test again.
9. Insert new motherboard if problem still exists and run test again.
10. Exit program and remove diagnostic disk from disk drive.
11. Power down system.

CHECKLIST

DUTY Evaluating Diagnostics.

TASK Conduct color bar test.

ENABLER The monitor, video cable, and the motherboard video generating circuitry must be tested to determine and correct the cause of display problem and must pass diagnostic test without error.

STUDENT'S NAME _____ DATE _____

EVALUATOR'S NAME _____ COURSE _____

TIME : STARTED _____ COMPLETED _____

TOTAL _____

DIRECTIONS TO THE EVALUATOR:

Use the following checklist to evaluate student performance when conducting color bar test.

RECORD THIS INFORMATION:

MANUFACTURER: _____ MODEL: _____

SERIAL #: _____

| PERFORMANCE DETERMINANTS | YES | NO |
|---|---|---|
| The preparer | | |
| - Powered up system. | ____ | ____ |
| - Inserted disk into disk drive. | ____ | ____ |
| - Loaded and ran color bar test program. | ____ | ____ |
| - Reviewed test usage information. | ____ | ____ |
| - Matched colors for proper verification. | ____ | ____ |
| - Recorded any changes made. | ____ | ____ |
| - Adjusted color timmer if necessary. | ____ | ____ |
| - Connected different monitor or video cable if necessary. | ____ | ____ |
| - Inserted new motherboard if necessary. | ____ | ____ |
| - Removed program. | ____ | ____ |
| - Removed disk from disk drive. | ____ | ____ |
| - Powered down system. | ____ | ____ |

DUTY: Evaluating Diagnostics

---

PERFORMANCE OBJECTIVE #41

TASK: Conduct graphic tablet test

STANDARD OF PERFORMANCE OF TASK:

Operation of the graphic tablet, graphic tablet pen, graphic tablet interface card must be tested to determine and correct graphic problem must pass diagnostic test without error.

SOURCE OF STANDARD:

Writing team of incumbent workers.

CONDITIONS FOR PERFORMANCE OF TASK:

| | |
|---|---|
| Disk Drive | Central processing unit |
| Diagnostic disks | Monitor |
| Pen/pencil | Note pad |
| Graphic tablet | Graphic pen |
| Tool kit | Graphic interface card |
| Integrated circuit inserter | |
| Integrated circuit puller | |

ENABLING OBJECTIVE:

1. Obtain diagnostic disk for graphic tablet test.
2. Determine problem with graphic tablet or graphic tablet interface card.
3. Connect graphic tablet to graphic interface card.

*RESOURCES:

1. Manufacturer's operator's manual.
2. Manufacturer's technical reference manual.
3. Manufacturer's service manual.
4. Checklist - Graphic tablet test.

TEACHING ACTIVITIES:

1. Present lecture on the location and function of the graphic tablet and interface card.
2. Discuss and demonstrate locating and checking graphic tablet and interface.

TEACHING ACTIVITIES: (cont.)

3. Present lecture on graphic tablet card testing procedures. (#1,2 & 3)
4. Discuss and demonstrate loading and running graphic tablet interface card test program from the diagnostic disk.
5. Discuss and demonstrate graphic tablet interface card test procedure.
6. Instruct student to practice conducting a graphic tablet interface card test.
7. Assign student a computer system diagnostic disk, graphic tablet and graphic tablet interface card.
8. Instruct student to conduct a graphic tablet test.

CRITERION-REFERENCED MEASURE:

The student will conduct a graphic tablet test. The graphic tablet and graphic interface card must pass diagnostic test without error.

PERFORMANCE GUIDE:

1. Install the graphic interface card and connect graphic pen and tablet to it.
2. Power up system.
3. Insert diagnostic disk into disk drive.
4. Load and run graphic test program.
5. Check the ROM on the graphic interface card by running the card test
6. Record changes made.
7. Adjust the interface card as instructed by test.
8. Check the graphic tablet by running the tablet test.
9. Replace ROM if the ROM test fails and run test again.
10. Replace the graphic pen if interface card cannot be correctly adjusted and run the test again. If the problem still exists replace the interface card and run test again.
11. Replace tablet if missing dots occur during surface test run test again.
12. Exit program and remove diagnostic disk from disk drive.
13. Power Down system.

CHECKLIST

DUTY Evaluating Diagnostics.

TASK Conduct graphic tablet test.

ENABLER Operation the graphic tablet. graphic tablet pen. graphic tablet interface card must be tested to determine and correct graphic problem and must pass diagnostic test without error.

STUDENT'S NAME _____ DATE _____

EVALUATOR'S NAME _____ COURSE _____

TIME : STARTED _____ COMPLETED _____

TOTAL _____

DIRECTIONS TO THE EVALUATOR:

Use the following checklist to evaluate student performance when conducting graphic tablet test.

| PERFORMANCE DETERMINANTS | YES | NO |
|---|---|---|
| The preparer | | |
| - Installed graphic interface card and connected graphic pen and table to it. | ____ | ____ |
| - Powered up system. | ____ | ____ |
| - Inserted disk into disk drive. | ____ | ____ |
| - Loaded and ran graphic test program. | ____ | ____ |
| - Checked the ROM. | ____ | ____ |
| - Recorded any changes made. | ____ | ____ |
| - Adjusted the interface card. | ____ | ____ |
| - Checked graphic tablet. | ____ | ____ |
| - Replaced ROM if necessary. | ____ | ____ |
| - Replaced graphic pen if necessary. | ____ | ____ |
| - Replaced tablet if necessary. | ____ | ____ |
| - Removed disk from disk drive. | ____ | ____ |
| - Powered down system. | ____ | ____ |

GUIDE SHEET

DUTY: Evaluating Diagnostics

---

PERFORMANCE OBJECTIVE #42

TASK: Conduct basic/integer card test.

STANDARD OF PERFORMANCE OF TASK:

Each ROM in the basic or integer set on the card must be tested to determine and correct basic/integer problems and must pass diagnostic test without error.

SOURCE OF STANDARD:

Writing team of incumbent workers.

CONDITIONS FOR PERFORMANCE OF TASK:

| | |
|---|---|
| Disk Drive | Central processing unit |
| Diagnostic disks | Monitor |
| Pen/pencil | Note pad |
| Tool kit | Basic integer ROM card |
| Integrated circuit inserter | |
| Integrated circuit puller | |

ENABLING OBJECTIVE:

1. Obtain diagnostic disk for testing basic/integer ROM card.
2. Determine problem with basic/integer ROM card.

*RESOURCES:

1. Manufacturer's operator's manual.
2. Manufacturer's technical reference manual.
3. Manufacturer's service manual.
4. Checklist - Basic/integer card test.

TEACHING ACTIVITIES:

1. Present lecture on location and function of basic/integer ROM card. (*1,2 & 3)
2. Discuss basic/integer ROM card function in relation to central processing unit.
3. Present lecture on basic/integer ROM card testing procedures. (*1,2 & 3)

TEACHING ACTIVITIES: (cont.)

4. Discuss and demonstrate loading and running basic ROM interface card test program from the diagnostic disk.
5. Discuss and demonstrate basic/integer ROM interface card test procedure.
6. Instruct student to practice conducting a basic/intege ROM interface card test.
7. Assign student a computer system, diagnostic disk and basic/integer ROM interface card.
8. Instruct student to conduct a basic/integer ROM card test.

CRITERION-REFERENCED MEASURE:

The student will conduct a basic/integer ROM card test to determine the cause of basic/integer ROM problem. The basic/integer ROM card must pass diagnostic test without error.

PERFORMANCE GUIDE:

1. Install the basic/integer ROM card into appropriate location.
2. Power up system.
3. Insert diagnostic disk into disk drive.
4. Load and run basic/integer ROM card test program.
5. Record ROM failure.
6. Replace any ROM that fails and run test again.
7. Exit program and remove diagnostic disk from disk drive.
8. Power down system.

CHECKLIST

DUTY Evaluating Diagnostics.

TASK Conduct basic/integer card test.

ENABLER Each ROM in the basic or integer set on the card must be tested to determine and correct basic/integer problems and must pass diagnostic test without error.

STUDENT'S NAME _____ DATE _____

EVALUATOR'S NAME _____ COURSE _____

TIME : STARTED _____ COMPLETED _____

TOTAL _____

DIRECTIONS TO THE EVALUATOR:

Use the following checklist to evaluate student performance when conducting basic/integer cars test.

RECORD THIS INFORMATION:

MANUFACTURER: _____ MODEL: _____

SERIAL #: _____

| PERFORMANCE DETERMINANTS | YES | NO |
|---|---|---|
| The preparer | | |
| - Installed basic/integer ROM test card. | ____ | ____ |
| - Powered up system. | ____ | ____ |
| - Inserted disk into disk drive. | ____ | ____ |
| - Loaded and tested program. | ____ | ____ |
| - Recorded ROM failure. | ____ | ____ |
| - Replaced any malfunctioning ROM. | ____ | ____ |
| - Removed disk from disk drive. | ____ | ____ |
| - Powered down system. | ____ | ____ |

GUIDE SHEET

DUTY: Evaluating Diagnostics

---

PERFORMANCE OBJECTIVE #43

TASK: Conduct language card test.

STANDARD OF PERFORMANCE OF TASK:

The RAM and autostart ROM on the language card must be tested to determine and correct program loading problems and must pass diagnostic test without error.

SOURCE OF STANDARD:

Writing team of incumbent workers.

CONDITIONS FOR PERFORMANCE OF TASK:

| | |
|---|---|
| Disk Drive | Central processing unit |
| Diagnostic disks | Monitor |
| Pen/pencil | Note pad |
| Tool kit | Language interface card |
| Integrated circuit inserter | |
| Integrated circuit puller | |

ENABLING OBJECTIVE:

1. Obtain diagnostic disk for testing language card.
2. Determine problem with language interface card.

*RESOURCES:

1. Manufacturer's operator's manual.
2. Manufacturer's technical reference manual.
3. Manufacturer's service manual.
4. Checklist - Language card test.

TEACHING ACTIVITIES:

1. Present lecture on location and function of language card. (*1,2 & 3)
2. Discuss language card function in relation to central processing unit.
3. Present lecture on language card testing procedures. (*1,2 & 3)
4. Discuss and demonstrate loading and running language interface card test program from the diagnostic disk.

TEACHING ACTIVITIES: (cont.)

5. Discuss and demonstrate language interface card test procedure.
6. Instruct student to practice conducting a language interface card test.
7. Assign student a computer system, diagnostic disk and language interface card.
8. Instruct student to conduct a language card test.

CRITERION-REFERENCED MEASURE:

The student will conduct a language card test to determine the cause of language problem. The language card must pass diagnostic test without error.

PERFORMANCE GUIDE:

1. Install the language interface card in appropriate location and connect cable to RAM integrated circuit location on motherboard.
2. Power up system.
3. Insert diagnostic disk into disk drive and boot.
4. Load and run language card test program.
5. Record RAM test results.
6. Proceed with autostart ROM test.
7. Record language card test failure.
   NOTE: When either RAM or ROM fails, replace RAM integrated circuit or autostart ROM and run test again.
8. Replace language card if problem still exists and run test again.
9. Exit test program and remove diagnostic disk from disk drive.

CHECKLIST

DUTY Evaluating Diagnostics.

TASK Conduct language card test.

ENABLER The RAM and autostart ROM onthe language card must be tested to determine and correct program loading problems and must pass diagnostic test without error.

STUDENT'S NAME _____ DATE _____

EVALUATOR'S NAME _____ COURSE _____

TIME : STARTED _____ COMPLETED _____

TOTAL _____

DIRECTIONS TO THE EVALUATOR:

Use the following checklist to evaluate student performance when conducting language card test.

RECORD THIS INFORMATION:

MANUFACTURER: _____ MODEL: _____

SERIAL #: _____

| PERFORMANCE DETERMINANTS | YES | NO |
|---|---|---|
| The preparer | | |
| - Installed language interface card. | ____ | ____ |
| - Powered up system. | ____ | ____ |
| - Inserted disk into disk drive and booted system. | ____ | ____ |
| - Loaded and ran language card test program. | ____ | ____ |
| - Recorded RAM test results. | ____ | ____ |
| - Proceeded with autostart ROM test. | ____ | ____ |
| - Recorded malfunctioning language card test. | ____ | ____ |
| - Replaced language card. | ____ | ____ |
| - Removed disk from disk drive. | ____ | ____ |

GUIDE SHEET

DUTY: Evaluating Diagnostics

---

PERFORMANCE OBJECTIVE #44

TASK: Conduct disk interface card test.

STANDARD OF PERFORMANCE OF TASK:

PROM on disk interface card must be tested to determine and correct the cause of disk data loading and saving problems and must pass diagnostic test without error

SOURCE OF STANDARD:

Writing team of incumbent workers.

CONDITIONS FOR PERFORMANCE OF TASK:

| | |
|---|---|
| Disk Drive | Central processing unit |
| Diagnostic disks | Monitor |
| Pen/pencil | Note pad |
| Service Manual | Disk interface card. |

ENABLING OBJECTIVE:

1. Obtain diagnostic disk for testing disk drive card.
2. Determine problem with disk drive interface card.

*RESOURCES:

1. Manufacturer's operator's manual.
2. Manufacturer's technical reference manual.
3. Manufacturer's service manual.
4. Manufacturer's DOS manual.
5. Checklist - Disk interface card test.

TEACHING ACTIVITIES:

1. Present lecture on location and function of disk drive card. (*1,2 & 3)
2. Discuss disk drive card function in relation to disk drive.
3. Present lecture on disk drive card testing procedures. (*1,2 & 3)
4. Discuss and demonstrate use of diagnostic disk (disk drive interface card test program).

TEACHING ACTIVITIES: (cont.)

5. Discuss and demonstrate disk drive interface card test procedure.
6. Instruct student to practice conducting a disk drive interface card test.
7. Assign student a computer system, diagnostic disk and disk drive interface card.
8. Instruct student to conduct a disk drive card test.

CRITERION-REFERENCED MEASURE:

The student will conduct a disk drive card test to determine the cause of disk drive problem. The disk drive card must pass diagnostic test without error.

PERFORMANCE GUIDE:

1. Note what kind of PROM is installed on disk interface card.
2. Install disk interface card in appropriate location.
3. Power up system.
4. Insert diagnostic disk into disk drive
5. Load and run disk interface card test program.
6. Enter location of disk interface card when promted.
7. Record test results as program runs.
   NOTE: When PROM fails, replace it and run test again.
8. Exit program and remove diagnostic disk from disk drive.
9. Power down system.

CHECKLIST

DUTY Evaluating Diagnostics.

TASK Conduct disk interface card test.

ENABLER PROM on disk interface card must be tested to determine and correct the cause of disk data loading and saving problems and must pass diagnostic test without error.

STUDENT'S NAME _____ DATE _____

EVALUATOR'S NAME _____ _____ COURSE _____

TIME : STARTED _____ COMPLETED _____

TOTAL _____

DIRECTIONS TO THE EVALUATOR:

Use the following checklist to evaluate student performance when conducting disk interface card test.

RECORD THIS INFORMATION:

MANUFACTURER: _____ MODEL: _____

SERIAL #: _____

| PERFORMANCE DETERMINANTS | YES | NO |
|---|---|---|
| The preparer | | |
| - Installed disk interface card. | ____ | ____ |
| - Powered up system. | ____ | ____ |
| - Inserted disk into disk drive. | ____ | ____ |
| - Loaded and ran program. | ____ | ____ |
| - Determined location of disk interface card. | ____ | ____ |
| - Recorded test results. | ____ | ____ |
| - Removed disk from disk drive. | ____ | ____ |
| - Powered down system. | ____ | ____ |

GUIDE SHEET

DUTY: Evaluating Diagnostics

---

PERFORMANCE OBJECTIVE #45

TASK: Conduct printer card test (parallel).

STANDARD OF PERFORMANCE OF TASK:

PROM on parallel interface card must be tested for printer operations and must pass diagnostic test without error.

SOURCE OF STANDARD:

Writing team of incumbent workers.

CONDITIONS FOR PERFORMANCE OF TASK:

| | |
|---|---|
| Disk Drive | Central processing unit |
| Diagnostic disks | Monitor |
| Pen/pencil | Note pad |
| Tool kit | Printer interface card. |

ENABLING OBJECTIVE:

1. Obtain diagnostic disk for testing parallel printer card.
2. Determine problem with parallel printer interface card.

*RESOURCES:

1. Manufacturer's operator's manual.
2. Manufacturer's technical reference manual.
3. Manufacturer's service manual.
4. Checklist - Printer card test.

TEACHING ACTIVITIES:

1. Present lecture on location and function of parallel printer card. (*1,2,3)
2. Discuss parallel printer card function in relation to printer.
3. Present lecture on parallel printer card testing procedures. (*1,2,3)
4. Discuss and demonstrate use of diagnostic disk (printer interface card test program).

TEACHING ACTIVITIES: (cont.)

5. Discuss and demonstrate parallel printer interface card test procedure.
6. Instruct student to practice conducting a parallel printer interface card test.
7. Assign student a computer system, diagnostic disk and parallel printer interface card.
8. Instruct student to conduct a parallel printer card test.

CRITERION-REFERENCED MEASURE:

The student will conduct a parallel printer card test to determine printer operations. The parallel printer card must pass diagnostic test without error.

PERFORMANCE GUIDE:

1. Install parallel interface card in appropriate location
2. Power up system.
3. Insert diagnostic disk into disk drive
4. Load and run Printer Interface Card Test program.
5. When promped, enter locaton of parallel interface card.
6. Record test results as program runs.
   NOTE: When PROM fails, replace interface card and run test again.
8. Exit program and remove diagnostic disk from disk drive.
9. Power down system.

CHECKLIST

DUTY Evaluating Diagnostics.

TASK Conduct printer card test.

ENABLER PROM on parallel interface card must be tested for printer operations and must pass diagnostic test without error.

STUDENT'S NAME _____ DATE _____

EVALUATOR'S NAME _____ COURSE _____

TIME : STARTED _____ COMPLETED _____

TOTAL _____

DIRECTIONS TO THE EVALUATOR:

Use the following checklist to evaluate student performance when conducting printer card test.

RECORD THIS INFORMATION:

MANUFACTURER: _____ MODEL: _____

SERIAL #: _____

| PERFORMANCE DETERMINANTS | YES | NO |
|---|---|---|
| The preparer | | |
| - Installed parallel interface card. | ____ | ____ |
| - Powered up system. | ____ | ____ |
| - Inserted disk into disk drive. | ____ | ____ |
| - Loaded and ran printer interface card test program. | ____ | ____ |
| - Determined location of card. | ____ | ____ |
| - Replaced PROM if necessary. | ____ | ____ |
| - Removed disk from disk drive. | ____ | ____ |
| - Powered down system. | ____ | ____ |

GUIDE SHEET

DUTY: Evaluating Diagnostics

---

PERFORMANCE OBJECTIVE #46

TASK: Conduct serial/communications card test.

STANDARD OF PERFORMANCE OF TASK:

Serial interface card and the communications interface card must be tested to determine serial printer or modem problems and must pass diagnostic test without error.

SOURCE OF STANDARD:

Writing team of incumbent workers.

CONDITIONS FOR PERFORMANCE OF TASK:

Tool Kit
Serial Interface card
Communications interface card

ENABLING OBJECTIVE:

1. Obtain diagnostic disk for testing serial/ communications card.
2. Determine problem with serial or communication interface card.

*RESOURCES:

1. Manufacturer's operator's manual.
2. Manufacturer's technical reference manual.
3. Manufacturer's service manual.
4. Checklist - Serial communications card test.

TEACHING ACTIVITIES:

1. Present lecture on location and function of serial/ communication card. (*1,2 & 3)
2. Discuss serial/ communication card function in relation to printer or modem.
3. Present lecture on serial/communication card testing procedures. (*1,2 & 3)
4. Discuss and demonstrate use of diagnostic disk (serial/communication card test program).

TEACHING ACTIVITIES: (cont.)

5. Discuss and demonstrate identification of card slot and installing serial/communication card.
6. Discuss and demonstrate setting configuration switches.
7. Discuss and demonstrate serial/communication card testing procedure.
8. Assign student a computer system, serial/communication card and diagnostic test equipment.
9. Instruct student to conduct a serial/communication card test.

CRITERION-REFERENCED MEASURE:

The student will conduct a serial/communication interface card test to determine printer or modem problems. The serial/communication card must pass the diagnostic test without error.

PERFORMANCE GUIDE:

1. Power down system and install serial interface card and communications interface card into proper slots.
2. Connect a jumper cable between the serial and communication interface connectors.
3. Power up system.
4. Insert diagnostic diskette into disk drive and boot.
5. Load and run serial/communications card test program.
6. Enter slot number where the serial and communication interface cards are installed.
7. Match the DIP switch positions on serial card, then move each switch to both of its positions and check to see if the screen picture follows the switch change.
8. Type a few characters and check that the characters appear on both the SENT and RECIEVED line when communications test screen appears. (Checks communication from serial card to communication card.)
9. Reverse test and type a few characters again. (Check communication from communication card to serial card.)
10. Review status screen to determine card malfunctions.
    NOTE: When PROM fails, replace it; if problem persists, replace card.
    NOTE: When switch setting test fails, or communication test fails, replace serial card; if it still fails, replace communication card.
11. Exit program and remove diagnostic disk from drive when system passes diagnostic test.
12. Power down system.

CHECKLIST

DUTY Evaluating Diagnostics.

TASK Conduct serial/communications card test.

ENABLER Serial interface card and the communications interface card must be tested to determine serial printer or modem problems and must pass diagnostic test without error.

STUDENT'S NAME _____ DATE _____

EVALUATOR'S NAME _____ COURSE _____

TIME : STARTED _____ COMPLETED _____

TOTAL _____

DIRECTIONS TO THE EVALUATOR:

Use the following checklist to evaluate student performance when conducting serial/communications card test.

| PERFORMANCE DETERMINANTS | YES | NO |
|---|---|---|
| The preparer | | |
| - Powered down system. | ____ | ____ |
| - Installed serial interface card and communications interface card. | ____ | ____ |
| - Connected jumper cables. | ____ | ____ |
| - Powered up system. | ____ | ____ |
| - Inserted disk and booted system. | ____ | ____ |
| - Loaded the program. | ____ | ____ |
| - Entered slot number. | ____ | ____ |
| - Matched switch positions on serial card. | ____ | ____ |
| - Checked to insure characters appaer on both the SENT and RECIEVED line. | ____ | ____ |
| - Determined card malfunctions. | ____ | ____ |
| - Removed disk from disk drive. | ____ | ____ |
| - Powered down system. | ____ | ____ |

GUIDE SHEET

DUTY: Evaluating Diagnostics

---

PERFORMANCE OBJECTIVE #47

TASK: Conduct monitor test.

STANDARD OF PERFORMANCE OF TASK:

Monitor must be tested to determine problems related to the composite video signal, horizontal and vertical hold, contrast or brightness. The monitor must produce a clear, bright, stable picture, and the monitor must pass the diagnostic test without error.

SOURCE OF STANDARD:

Writing team of incumbent workers.

CONDITIONS FOR PERFORMANCE OF TASK:

Monitor
Oscilloscope
Central processing unit
Tweeking tools
Wave pattern chart
Tool kit
Video cables

ENABLING OBJECTIVE:

1. Determine and correct monitor problems.
2. Check cables and cable connections.
3. Identify monitor components to be tested.

*RESOURCES:


1. Art Margolis. Troubleshooting and Repairing Personal Computers. Tab Books Inc., Blue Ridge Summit, PA , 1983.
2. Stephenson and Cahill. How To Maintain and Service Your Small Computer. Howard W. Sams and Company, Inc., Indianapolis, IN , 1983.
3. Art Margolis. Computer Technician's Handbook. 2nd Edition.
4. Byron Maguire. Handbook of Computer Maintenance and Troubleshooting. Reston Publishing Company, Inc., Reston, VA , 1973.

*RESOURCES: (cont.)

5. Art Margolis. Computer User's Guide to Electronics. Tab Books Inc., Blue Ridge Summit, PA , 1985.
6. Stan Gibilisco. Encyclopedia of Electronics. Tab Professional and Reference Books, Tab Books Inc., Blue Ridge Summit, PA , 1985.
7. Robert Goodman. Troubleshooting Microprocessors and Digital Logic. Tab Books Inc., Blue Ridge Summit, PA , 1980.
8. Manufacturer's operator's manual.
9. Manufacturer's technical reference manual.
10. Manufacturer's service manual.
11. Checklist - Monitor test.

TEACHING ACTIVITIES:

1. Present lecture on monitor components to be tested. (*1,2,3,4,5,6 & 7)
2. Discuss and demonstrate cables and cable connections, picture tube, potentiometers and coils.
3. Present lecture on test procedure for monitor components.
4. Discuss and demonstrate test procedures for cables and cable connections.
5. Discuss and demonstrate test procedures for adjusting picture tube yoke.
6. Discuss and demonstrate test procedures for vertical, focus, volume, contrast and color potentiometers.
7. Discuss and demonstrate test procedure for horizontal and width control coils.
8. Discuss and demonstrate a oscilloscope check of video circuits and signals.
   CAUTION: High voltage of around 15,000 volts are present in parts of the monitor and extreme caution must be taken when working with the inside of a monitor.
9. Instruct student to practice monitor tests.
10 Assign student a monitor and test equipment.
11. Instruct student to conduct a monitor test.

CRITERION-REFERENCED MEASURE:

The student will conduct a monitor test. The monitor will produce a clear, bright, stable picture.

PERFORMANCE GUIDE:

1. Check video cables for breaks, loose connections, and dirty or bent connector plugs
2. Check power cable for loose or faulty connections.
3. Check on/off and volume switch for shorts.

PERFORMANCE GUIDE: (cont.)

4. Check TV/computer conversion box and cables ( if TV is being used as a monitor.)

   CAUTION: Some sections of TV's and monitors carry high voltage. In parts can carry 10,000 to 30,000 volts. Extreme caution, special equipment and special training is needed for work on the inside of TV's and monitors.

5. Power up system.
6. Turn horizontal hold adjustment and the vertical hold adjustment until picture remains stationary.
7. Turn contrast knob through its full range, stop where picture on screen is clearest.
8. Turn brightness knob through its full range and observe if dark and light extremes exists.
9. Check the composite video signal:
   A. Picture signal
   B. Blanking signal
   C. Horizontal sync
   D. Vertical sync
   E. Signal data

   NOTE: Refer to wave pattern chart for diagram of desired wave.

CHECKLIST

DUTY Evaluating Diagnostics.

TASK Conduct monitor test.

ENABLER Monitor must be tested to determine problems related to the composite video signal, horizontal and vertical contrast or brightness. The monitor must produce a clear bright, stable picture and the monitor must pass the diagnostic test without error.

STUDENT'S NAME _____ DATE _____

EVALUATOR'S NAME _____ COURSE _____

TIME : STARTED _____ COMPLETED _____

TOTAL _____

DIRECTIONS TO THE EVALUATOR:

Use the following checklist to evaluate student performance when conducting monitor test

RECORD THIS INFORMATION:

MANUFACTURER: _____ MODEL: _____

SERIAL #: _____

| PERFORMANCE DETERMINANTS | YES | NO |
|---|---|---|
| The preparer | | |
| - Checked video cables. | ____ | ____ |
| - Checked power cables. | ____ | ____ |
| - Checked on/off switch. | ____ | ____ |
| - Checked TV/computer conversion box and cables. | ____ | ____ |
| - Powered up system. | ____ | ____ |
| - Turned horizontal hold adjustment and vertical hold adjustment. | ____ | ____ |
| - Turned contrast knob. | ____ | ____ |
| - Turned brightness knob. | ____ | ____ |
| - Checked the composite video signal. | ____ | ____ |

GUIDE SHEET

DUTY: Evaluating Diagnostic

---

PERFORMANCE OBJECTIVE #48

TASK: Conduct oscilloscope test.

STANDARD OF PERFORMANCE OF TASK:

Equipment which makes use of changing electronic signals will be tested by comparing wave patterns on the oscilloscope to wave pattern chart. Wave pattern on the oscilloscope must be the same wave pattern on the wave chart.

SOURCE OF STANDARD:

Writing team of incumbent workers.

CONDITIONS FOR PERFORMANCE OF TASK:

Tool kit
Oscilloscope
Wave pattern chart
Oscilloscope operator
Equipment to be checked
Equipment schematics

ENABLING OBJECTIVE:

1. Interpret oscilloscope wave patterns.
2. Compare wave patterns to wave pattern chart.
3. Select proper vertical and timing settings on oscilloscope.
4. Connect test probes to test points.
5. Identify proper test points.

*RESOURCES:


1. Stephenson and Cahill. How To Maintain and Service Your Small Computer. Howard W. Sams and Company, Inc., Indianapolis, IN , 1983.
2. Art Margolis. Computer Technician's Handbook, 2nd Edition. Tab Books Inc., Blue Ridge Summit, PA , 1985.
3. Byron Maguire. Handbook of Computer Maintenance and Troubleshooting. Reston Publishing Company, Inc., Reston, VA , 1973.

RESOURCES: (cont.)

4. Art Margolis. Computer User's Guide to Electronics. Tab Books Inc., Blue Ridge Summit, PA , 1985.
5. Stan Gibilisco. Encyclopedia of Electronics. Tab Professional and Reference Books, Tab Books Inc., Blue Ridge Summit, PA , 1985.
6. Robert Goodman. Troubleshooting Microprocessors and Digital Logic. Tab Books Inc., Blue Ridge Summit, PA , 1980.
7. Manufacturer's operators manual.
8. Manufacturer's service manual.
9. Waveform pattern chart.
10. Checklist - Oscilloscope test.

TEACHING ACTIVITIES:

1. Present lecture on types and functions of oscilloscopes. (#1,2,3,4,5 & 6)
2. Discuss and demonstrate dual trace, triggered-sweep, ordinary x-y service scope, and four channel oscilloscopes.
3. Present lecture on type of tests and testing procedures for an oscilloscope. (#1,2,3,4,5, 6,7 & 8)
4. Discuss and demonstrate frequency divider waveforms, divide by eight circuit waveform, propagation time measurement, digital circuit time relationship, clock or pulse generation, signal checks, and circuit checks.
5. Discuss and demonstrate component test point identification.
6. Discuss and demonstrate oscilloscope test set-up procedure.
7. Instruct student to practice conducting different oscilloscope tests.
8. Assign student a oscilloscope and computer equipment.
9. Instruct student to perform a specific oscilloscope test on the computer equipment.

CRITERION-REFERENCED MEASURE:

The student will identify the compo?ent to be tested, determine proper test points, set up the oscilloscope and perform the necessary oscilloscope test.

PERFORMANCE GUIDE:

1. Power down system.
2. Set vertical and timing setting on the oscilloscope (usually 50 millivolts and 20 milliseconds).
   NOTE: Check operator manual for proper setting.
3. Connect probes for channels A and B on the two points to be tested and ground them.

PERFORMANCE GUIDE: (cont.)

4. Connect the external trigger probe to sync signal test point.
5. Pcwer up system and oscilloscope.
6. Compare wave pattern on oscilloscope to the wave pattern diagram chart.
7. Adjust until patterns match or replace the part.
8. Power down system and oscilloscope.
9. Disconnect probes from test points.

CHECKLIST

DUTY Evaluating Diagnostics.

TASK Conduct oscilloscope test.

ENABLER Equipment which makes use of changing electronic signals will be tested by comparing wave patterns on the oscilloscope to wave pattern chart. The oscilloscope wave must be the same wave pattern as on the wave chart.

STUDENT'S NAME _____ DATE _____

EVALUATOR'S NAME _____ COURSE _____

TIME : STARTED _____ COMPLETED _____

TOTAL _____

DIRECTIONS TO THE EVALUATOR:

Use the following [illegible] to evaluate student performance when co[illegible] oscilloscope test.

RECORD THIS INFORMATION:

MANUFACTURER: _____ MODEL: _____

SERIAL #: _____

| PERFORMANCE DETERMINANTS | YES | NO |
|---|---|---|
| The preparer | | |
| - Powered down system. | ____ | ____ |
| - Set verticle and timing setting. | ____ | ____ |
| - Connected probes. | ____ | ____ |
| - Connected external trigger probe. | ____ | ____ |
| - Powered up system and oscilloscope. | ____ | ____ |
| - Compared wave patterns. | ____ | ____ |
| - Adjusted patterns if necessary. | ____ | ____ |
| - Powered down system and oscilloscope. | ____ | ____ |
| - Disconnected probes. | ____ | ____ |

GUIDE SHEET

DUTY: Evaluating Diagnostics

---

PERFORMANCE OBJECTIVE #49

TASK: Conduct data communication line test.

STANDARD OF PERFORMANCE OF TASK:

Data communication line must be tested to determine if a signal is being transmitted into and from the modem. Signals must be transmitted to and from modem without error.

SOURCE OF STANDARD:

Writing team of incumbent workers.

CONDITIONS FOR PERFORMANCE OF TASK:

System to be serviced
Voltmeter

ENABLING OBJECTIVE:

1. Connect modem to computer.
2. Determine if data communication line is functioning.

*RESOURCES:

1. Stephenson and Cahill. How To Service and Maintain Your Small Computer. Howard W. Sams and Company, Inc., Indianapolis, IN , 1983.
2. Manufacturer's operator's manual.
3. Manufacturer's technical reference manual.
4. Manufacturer's service manual.
5. Checklist - Data communication line test.

TEACHING ACTIVITIES:

1. Present lecture on types of data communication lines. (*1,2,3,4)
2. Discuss types of data communication interfaces used between modem and computer.
3. Discuss setting configuration switches for proper baud rate and parity.
4. Discuss how data is transferred from computer to modem and vice-versa.

TEACHING ACTIVITIES: (cont.)

5. Present lecture on data communication line testing procedures. (*1,2,3,4)
6. Demonstrate modem self-test.
7. Demonstrate interface signal check.
8. Demonstrate phone jack connector test.
9. Assign student a computer, modem, and data communication interface.
10. Instruct student to conduct a data communication line test.

CRITERION-REFERENCED MEASURE:

The student will conduct a data communication line test including modem self-test, data communication interface signal and telephone jack signal. Data communication line signal must be transmitted to and from all test points.

PERFORMANCE GUIDE:

1. Power up system.
2. Receive and transmit data to the modem.
3. Turn on voltmeter and test the modem connector then for a signal; if a signal is found at modem connector then check modem unit.
4. Test phone jack connector when no signal is found at modem.
   NOTE: Signal is found at jack connector, check peripheral cable for shorts.
5. Contact the telephone company to check the phone lines for problems when no signal is found at phone jack connector.

CHECKLIST

DUTY Evaluating Diagnostics.

TASK Conduct data communication line test.

ENABLER Data communication line must be tested to determine if a signal is being transmitted into and from the modem. Signals must be transmitted to and from modem without error.

STUDENT'S NAME _____ DATE _____

EVALUATOR'S NAME _____ COURSE _____

TIME : STARTED _____ COMPLETED _____

TOTAL _____

DIRECTIONS TO THE EVALUATOR:

Use the following checklist to evaluate student performance when conducting data communication line test.

RECORD THIS INFORMATION:

MANUFACTURER: _____ MODEL: _____

SERIAL #: _____

| PERFORMANCE DETERMINANTS | YES | NO |
|---|---|---|
| The preparer | | |
| - Powered up system. | ____ | ____ |
| - Recieved and transmitted data to modem. | ____ | ____ |
| - Tested modem connector with a voltmeter. | ____ | ____ |
| - Tested phone jack connector. | ____ | ____ |
| - Checked peripheral cables for shorts. | ____ | ____ |
| - Contacted phone company for a phone line check. | ____ | ____ |

GUIDE SHEET

DUTY: Evaluating Diagnostics

---

PERFORMANCE OBJECTIVE #50

TASK: Interpret diagnostic flowcharts.

STANDARD OF PERFORMANCE OF TASK:

Follow diagnostic flowchart until the malfunctioning part is identified or the problem is solved.

SOURCE OF STANDARD:

Writing team of incumbent workers.

CONDITIONS FOR PERFORMANCE OF TASK:

Diagnostic flowcharts
System to be checked
Customer complaint

ENABLING OBJECTIVE:

1. Identify diagnostic flowchart symbols.
2. Understand flowchart logic.
3. Troubleshoot a computer problem using a diagnostic flowchart.

*RESOURCES:

1. Manufacturer's operator's manual.
2. Manufacturer's DOS manual.
3. Manufacturer's technical reference manual.
4. Manufacturer's service manual.
5. Checklist - Diagnostic flowchart interpretation.
6. Visual Aid - Typical flowchart.

TEACHING ACTIVITIES:

1. Present lecture on the purpose of a diagnostic flowchart. (*1,2,3,4)
2. Discuss troubleshooting using a diagnostic flowchart.
3. Discuss time saved by using a diagnostic flowchart.
4. Present lecture on using a diagnostic flowchart for troubleshooting.
5. Demonstrate how to interpret diagnostic flowchart.

TEACHING ACTIVITIES: (cont.)

6. Demonstrate diagnostic flow chart logic and symbols.
7. Instruct student to practice using a diagnostic flowchart.
8. Assign a computer problem to the student and a diagnostic flowchart.
9. Instruct student to troubleshoot the computer problem using the diagnostic flowchart.

CRITERION-REFERENCED MEASURE:

The step of the diagnostic flowchart must be followed in troubleshooting a computer problem.

PERFORMANCE GUIDE:

1. Determine customer complaint and select appropriate flowchart.
2. Begin troubleshooting at Box 1 of the flowchart.
3. Carry out the designated troubleshooting step.
4. Proceed with next step as indicated by symptom or outcome of prior step.
5. Continue steps until problem is identified and solved.

CHECKLIST

DUTY Evaluating Diagnostics.

TASK Interpret diagnostic flowcharts.

ENABLER Follow diagnostic flowchart until malfunction ing part is identified or the problem is sloved.

STUDENT'S NAME _____ DATE _____

EVALUATOR'S NAME _____ COURSE _____

TIME : STARTED _____ COMPLETED _____

TAL _____

DIRECTIONS TO THE EVALUATOR:

Use the following checklist to evaluate student performance when interpreting diagnostic flowcharts.

RECORD THIS INFORMATION:

MANUFACTURER: _____ MODEL: _____

SERIAL #: _____

| PERFORMANCE DETERMINANTS | YES | NO |
|---|---|---|
| The preparer | | |
| - Determined customer complaint. | ____ | ____ |
| - Selected appropriate flowchart. | ____ | ____ |
| - Began troubleshooting at box 1 of the flowchart. | ____ | ____ |
| - Carried out designated troubleshooting steps. | ____ | ____ |
| - Proceeded onto next step based on outcome of prior. | ____ | ____ |
| - Identified problem. | ____ | ____ |
| - Solved problem. | ____ | ____ |

GUIDE SHEET

DUTY: Maintaining Computer Equipment

---

PERFORMANCE OBJECTIVE #51

TASK: Clean metallic parts.

STANDARD OF PERFORMANCE OF TASK:

Dirt and other foreign debris must be removed from metallic mechanical parts so that part is clean and functional.

SOURCE OF STANDARD:

Writing team of incumbent workers.

CONDITIONS FOR PERFORMANCE OF TASK:

Equipment to be serviced
Alcohol or safe cleaning/degreasing agent
Tool kit
Brush
Clean soft cloth

ENABLING OBJECTIVE:

1. Identify metallic part to be cleaned.
2. Remove dirt and other foreign debris from metallic parts.

*RESOURCES:

1. Stephenson and Cahill. How To Maintain and Service Your Small Computer. Howard W. Sams and Comp., Inc., Indianapolis, IN , 1983.
2. Manufacturer's operator's manual.
3. Manufacturer's technical reference manual.
4. Manufacturer's service manual.
5. Checklist - Clean metallic parts.

TEACHING ACTIVITIES:

1. Present lecture on cleaning metallic parts. (*1,2,3,4,5)
2. Discuss problems caused by dirty metallic parts.
3. Discuss and demonstrate cleaning procedures for metallic parts.

TEACHING ACTIVITIES: (cont.)

4. Instruct student to practice cleaning procedures for metallic parts.
5. Discuss and demonstrate degreasing procedures for metallic parts.
6. Instruct student to practice degreasing procedure for metallic parts.
7. Assign student metallic parts to be cleaned and degreased and cleaning equipment.
8. Instruct student to clean and degrease the metallic parts.

CRITERION-REFERENCED MEASURE:

The student will identify the metallic parts to be cleaned and clean and degrease the metallic parts.

PERFORMANCE GUIDE:

1. Obtain equipment to be serviced.
2. Dismantle equipment until part is accessible. (If necessary remove part to be cleaned.)
3. Brush or blow away any loose dust, dirt or foreign debris from part.
4. Wipe the part until clean, using a soft clean cloth, moistened with alcohol or a safe cleaning/degreasing agent,
5. Wipe the part with another clean soft cloth moistened with alcohol if a residue or dirt still remains.
6. Dry excess cleaner from part.
7. Lubricate part when necessary or appropriate.
8. Reassemble equipment.

CHECKLIST

DUTY Maintaining Computer Equipment

TASK Clean metallic parts.

ENABLER Dirt and other foreign debris must be removed from metallic mechanical parts so that part is clean and functional.

STUDENT'S NAME _____ DATE _____

EVALUATOR'S NAME _____ COURSE _____

TIME : STARTED _____ COMPLETED _____

TOTAL _____

DIRECTIONS TO THE EVALUATOR:

Use the following checklist to evaluate student performance when cleaning metallic parts.

RECORD THIS INFORMATION:

MANUFACTURER: _____ MODEL: _____

SERIAL #: _____

| PERFORMANCE DETERMINANTS | YES | NO |
|---|---|---|
| The preparer | | |
| - Obtained faulty equipment. | ____ | ____ |
| - Dismantled faulty equipment. | ____ | ____ |
| - Blew loose dirt, dust and foreign debris from part. | ____ | ____ |
| - Cleaned part with cloth moistened in alcohol/cleaning agent. | ____ | ____ |
| - Dried excess cleaner from part. | ____ | ____ |
| - Lubricated part if necessary. | ____ | ____ |
| - Reassembled equipment. | ____ | ____ |

GUIDE SHEET

DUTY: Maintaining Computer Equipment

---

PERFORMANCE OBJECTIVE #52

TASK: Clean non-metallic parts.

STANDARD OF PERFORMANCE OF TASK:

Dust, dirt and other foreign debris must be removed from non-metallic mechanical parts so part is clean and functional.

SOURCE OF STANDARD:

Writing team of incumbent workers.

CONDITIONS FOR PERFORMANCE OF TASK:

Equipment to be serviced
Alcohol or safe cleaning agent
Tool Kit
Fedron/rubber cleaner
Brush and soft cloth

ENABLING OBJECTIVE:

1. Identify type of material to be cleaned and a safe cleaning agent.
2. Remove dust, dirt and other foreign debris from non-metallic parts/materials.

*RESOURCES:

1. Stephenson and Cahill. How To Maintain And Service Your Small Computer. Howard W. Sams and Company, Inc., Indianapolis, IN , 1983
2. Manufacturer's operator's manual.
3. Manufacturer's DOS manual.
4. Manufacturer's technical reference manual.
5. Manual service manual.
6. Checklist - Clean non-metallic parts.

TEACHING ACTIVITIES:

1. Present lecture on types of non-metallic material. (*1)
2. Discuss plastic, rubber and glass part/material.

TEACHING ACTIVITIES: (cont.)

3. Present lecture on cleaning non-metallic parts. (*1,2,3,4 & 5)
4. Discuss and demonstrate safe cleaning agents for non-metallic parts.
5. Discuss and demonstrate cleaning procedure for non-metallic parts/material.
6. Instruct student to practice non-metallic cleaning procedures.
7. Assign student non-metallic parts/materials and cleaning agents.
8. Instruct student to identify the type of non-material, proper cleaning agent, and to clean the non-metallic part/material.

CRITERION-REFERENCED MEASURE:

The student will identify the type of non-metallic material the part is made of, determine the proper cleaning agent and clean the non-metallic part/material.

PERFORMANCE GUIDE:

1. Obtain equipment to be serviced.
2. Dismantle equipment until part is accessible. (If necessary remove part to be cleaned.)
3. Brush or blow away any loose dust, dirt or foreign debris from part.
4. Wipe the part till clean using a soft clean cloth, moistened with alcohol or a safe cleaning agent.
   A. Clean plastic parts only with a low residue cleaner; do not use high residue cleaners such as soaps.
   B. Clean rubber parts with Fedron or approved rubber cleaner.
   C. Clean mechanical parts with nonresidue spray cleaners.
5. Wipe the part with another clean soft cloth moistened with alcohol or safe cleaning agent if a residue or dirt still remains.
6. Dry excess cleaner from part.
7. Lubricate part when necessary or appropriate.
8. Reassemble equipment.

CHECKLIST

DUTY Maintaining Computer Equipment

TASK Clean non-metallic parts.

ENABLER Dust, dirt and other foreign debris must be removed from non-metallic mechanical parts so part is clean and functional.

STUDENT'S NAME _____ DATE _____

EVALUATOR'S NAME _____ COURSE _____

TIME : STARTED _____ COMPLETED _____

TOTAL _____

DIRECTIONS TO THE EVALUATOR:

Use the following checklist to evaluate student performance when cleaning non-metallic parts.

RECORD THIS INFORMATION:

MANUFACTURER: _____ MODEL: _____

SERIAL #: _____

| PERFORMANCE DETERMINANTS | YES | NO |
|---|---|---|
| The preparer | | |
| - Obtained faulty equipment. | ____ | ____ |
| - Dismantled faulty equipment. | ____ | ____ |
| - Blew away dirt, dust, and foreign debris from part. | ____ | ____ |
| - Identified type of non-metallic material the part is made of. | ____ | ____ |
| - Identified type of cleaner for part. | ____ | ____ |
| - Cleaned part with cloth moistened in alcohol/cleaning agent. | ____ | ____ |
| - Dried excess cleaner from part. | ____ | ____ |
| - Lubricated part if necessary. | ____ | ____ |
| - Reassembled equipment. | ____ | ____ |

GUIDE SHEET

DUTY: Maintaining Computer Equipment

---

PERFORMANCE OBJECTIVE #53

TASK: Clean Electrical Connections.

STANDARD OF PERFORMANCE OF TASK:

Dirt and corrosion must be removed from electrical contacts/connections so they are clean and functional.

SOURCE OF STANDARD:

Writing team of incumbent workers.

CONDITIONS FOR PERFORMANCE OF TASK:

Equipment to be serviced
Tool Kit
Service Manual
Cotton swabs
Burnishing fluid/contact cleaner

ENABLING OBJECTIVE:

1. Identify electrical connections to be cleaned.
2. Remove dirt and corrosion from electrical connections.
3. Determine test equipment for cleaning electrical connections.

*RESOURCES:

1. Stephenson and Cahill. How To Maintain and Service Your Small Computer. Howard W. Sams and Company, Inc., Indianapolis, IN , 1983.
2. Manufacturer's operator's manual.
3. Manufacturer's technical reference manual.
4. Manufacturer's service manual.
5. Checklist - Clean electrical connections.

TEACHING ACTIVITIES:

1. Present a lecture on different types of electrical connections.
2. Discuss and ungrounded and grounded electrical connections.

TEACHING ACTIVITIES: (cont.)

3. Discuss and demonstrate safety precautions for cleaning electrical connections.
4. Present lecture on electrical connections cleaning procedures. (#1,2,3 & 4)
5. Demonstrate eraser cleaning procedure for electrical connections.
6. Instruct student to practice eraser cleaning procedure.
7. Discuss and demonstrate cleaning solution cleaning procedure for electrical connections.
8. Instruct student to practice cleaning solution cleaning procedures.
9. Assign student a electrical cable and cleaning equipment.
10. Instruct student to clean a electrical connection.

CRITERION-REFERENCED MEASURE:

The student will identify electrical connection, clean the electrical connection and conduct an inspection for damage to connection. Connections must be clean and snug with no bent pins or prongs.

PERFORMANCE GUIDE:

1. Obtain equipment to be serviced.
2. Dismantle equipment until part is accessible.
3. Dip cotton swab in burnishing fluid/contact cleaner and gently pull it over bottle lip to remove excess fluid.
4. Gently rub connection with moistened cotton swab until corrosion and dirt is removed.
5. Use a second cotton swab moistened with burnishing fluid/contact cleaner.
6. Rub connection gently with a dry cotton swab to remove excess fluid.
7. Reassemble equipment

CHECKLIST

DUTY Maintaining Computer Equipment

TASK Clean Electrical Connections.

ENABLER Dirt and corrosion must be removed from electrical contacts/connections so they are clean and functional.

STUDENT'S NAME _____ DATE _____

EVALUATOR'S NAME _____ COURSE _____

TIME : STARTED _____ COMPLETED _____

TOTAL _____

DIRECTIONS TO THE EVALUATOR:

Use the following checklist to evaluate student performance when cleaning electrical connections.

RECORD THIS INFORMATION:

MANUFACTURER: _____ MODEL:

SERIAL #: _____

| PERFORMANCE DETERMINANTS | YES | NO |
|---|---|---|
| The preparer | | |
| - Obtained equipment to be serviced. | ____ | ____ |
| - Dismantled equipment. | ____ | ____ |
| - Identified type of of electrical connection. | ____ | ____ |
| - Identified type of cleaner to use. | ____ | ____ |
| - Moistened cotton swab with cleaning agent. | ____ | ____ |
| - Cleaned part with moistened cotton swab. | ____ | ____ |
| - Removed excess cleaning fluid from connection with a dry cotton swab. | ____ | ____ |
| - Reassembled equipment. | ____ | ____ |

GUIDE SHEET

DUTY: Maintaining Computer Equipment

---

PERFORMANCE OBJECTIVE #54

TASK: Clean cable connections

STANDARD OF PERFORMANCE OF TASK:

Connections must be clean, snug, dirt and corrosion removed from silver-plated contacts and pins straight.

SOURCE OF STANDARD:

Writing team of incumbent workers.
How To Maintain and Service Your Small Computer.

CONDITIONS FOR PERFORMANCE OF TASK:

Cable connection to be cleaned
Pencil eraser
Tweezers

ENABLING OBJECTIVE:

1. Identify cable connections to be cleaned.
2. Remove dirt and corrosion from cable connections.
3. Determine test equipment for cleaning cable connections.

*RESOURCES:

1. Stephenson and Cahill. How To Maintain and Service Your Small Computer. Howard W. Sams and Company, Inc., Indianapolis, IN , 1983.
2. Manufacturer's operator's manual.
3. Manufacturer's technical reference manual.
4. Manufacturer's service manual.
5. Visual aid - Cleaning cable connections.
6. Checklist - Clean cable connections.

TEACHING ACTIVITIES:

1. Present a lecture on different types of cable connections. (*2)
2. Discuss card plug, pin plug, parallel plug, jack plug and prong plug connections.

TEACHING ACTIVITIES: (cont.)

3. Discuss and demonstrate safety precautions for cleaning cable connections.
4. Present lecture on cable connection cleaning procedures. (*1,2,3,4 & 5)
5. Demonstrate eraser cleaning procedure for cable connections.
6. Instruct student to practice eraser cleaning procedure.
7. Discuss and demonstrate cleaning solution cleaning procedure for cable connections.
8. Instruct student to practice cleaning solution cleaning procedures.
9. Assign student a peripheral cable and cleaning equipment.
10. Instruct student to clean a cable connection.

CRITERION-REFERENCED MEASURE:

The student will identify cable connection, clean the cable connection and conduct a inspection for damage to connection. Connections must be clean and snug with no bent pins or contacts.

PERFORMANCE GUIDE:

1. Disconnect cable to equipment.
2. Rub the silver-plated connector from the inside of the contact to the outside.
3. Repeat step 2 until all contacts are clean.
4. Blow away any rubber "crumbs".
5. Check that all pin contacts are straight.
6. Grasp contact with tweezers and gently straighten if a pin contact is bent.
7. Reconnect cable to equipment.

# CLEANING CABLE CONNECTORS

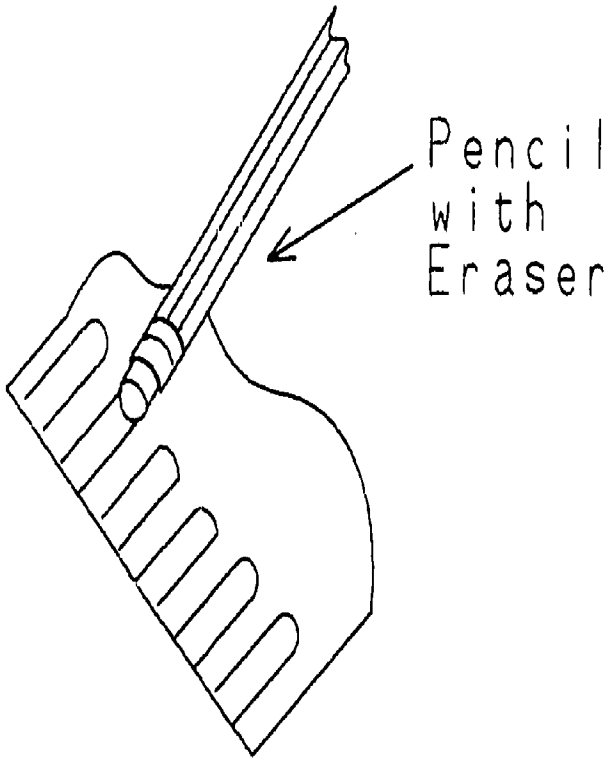


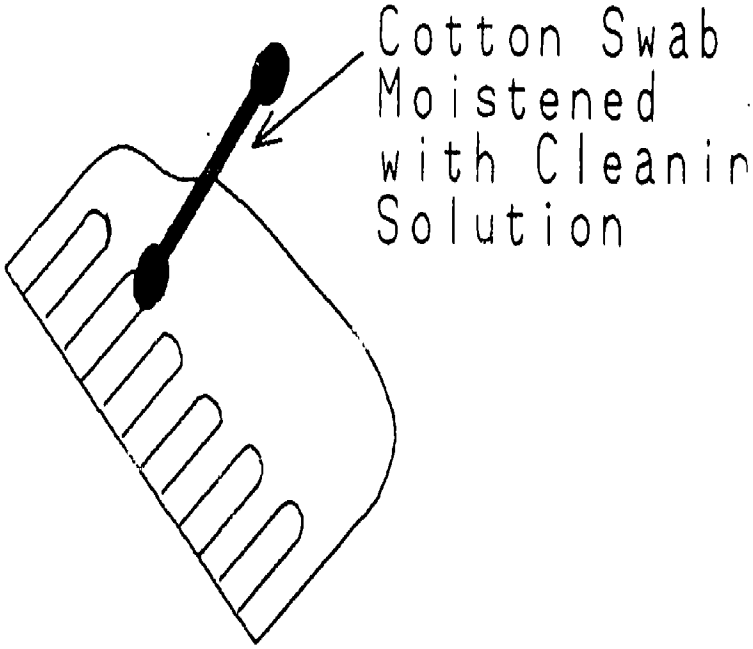


Eraser Method

Cleaning Solution Method

With either method, always wipe towards the edge of the card.

CHECKLIST

DU : Maintaining Computer Equipment

TASK Clean cable connections.

ENABLER Connections must be clean, snug, dirt and corrosion removed from silver-plated contacts and pins straight.

STUDENT'S NAME _____ DATE _____

EVALUATOR'S NAME _____ COURSE _____

TIME : STARTED _____ COMPLETED _____

TOTAL _____

DIRECTIONS TO THE EVALUATOR:

Use the following checklist to evaluate student performance when cleaning cable connections.

RECORD THIS INFORMATION:

MANUFACTURER: _____ MODEL: _____

SERIAL #: _____

| PERFORMANCE DETERMINANTS | YES | NO |
|---|---|---|
| The preparer | | |
| - Disconnected cable from equipment. | ____ | ____ |
| - Identified the type of cleaner to use. | ____ | ____ |
| - Rubbed silver-plated connector from the inside to the outside. | ____ | ____ |
| - Repeated procedure until connector was clean. | ____ | ____ |
| - Removed excess cleaning fluid or eraser crumbs. | ____ | ____ |
| - Checked that pin contacts are straight. | ____ | ____ |
| - Reconnected cable to equipment. | ____ | ____ |

GUIDE SHEET

DUTY: Maintaining Computer Equipment

---

PERFORMANCE OBJECTIVE #55

TASK: Clean Printer head.

STANDARD OF PERFORMANCE OF TASK:

Dust, dirt, paper chips and accumulated ink must be removed from printer head so that it will produce clean crisp letters.

SOURCE OF STANDARD:

Writing team of incumbent worker.
How To Maintain and Service Your Small Computer.

CONDITIONS FOR PERFORMANCE OF TASK:

Printer head
Alcohol
Brush
Cotton swab
Tool kit

ENABLING OBJECTIVE:

1. Remove dust, dirt, paper chips and accumulated ink from printer head.
2. Obtain access to printer head.
3. Gather print head cleaning equipment.

*RESOURCES:

1. Computer Facts. Howard W. Sams and Company, Inc., Indianapolis, IN .
2. Stephenson and Cahill. How To Maintain and Service Your Small Computer. Howard W. Sams and Company, Inc., Indianapolis, IN , 1983.
3. Manufacturer's operator's manual.
4. Manufacturer's technical reference manual.
5. Manufacturer's service manual.
6. Checklist - Clean printer head.

TEACHING ACTIVITIES:

1. Present lecture on dust, dirt, paper chips and ink build-up on printer head. (*2)

TEACHING ACTIVITIES: (cont.)

2. Discuss problems caused by dirt, dust, paper chips and ink build-up.
3. Discuss precautions to be taken when cleaning the print head.
4. Present lecture on methods for cleaning printer heads. (#1,2,3,4 & 5).
5. Demonstrate cleaning procedures for daisywheel, ball or thimble printer head.
6. Instruct student to practice cleaning a daisywheel, ball and thimble printer head.
7. Discuss and demonstrate cleaning procedures for a dot matrix printer head.
8. Instruct student to practice cleaning procedures for a dot matrix printer head.
9. Assign student a printer to be cleaned and printer head cleaning equipment.
10. Instruct student to clean the printer head.

CRITERION-REFERENCED MEASURE:

The student will determine the type of printer head, clean the printer head and perform an operational check. The printer head must produce clean, crisp, readable letters.

PERFORMANCE GUIDE:

1. Brush or blow any loose dust, dirt and paper chips from on top of the printer head.
2. Remove and clean printer head:
   A. Daisy wheel, ball or thimble head:
      1. Spray or moisten printer head in low residue cleaner such as alcohol.
      2. Gently brush letters on head to remove accumulated ink.
      3. Thoroughly rinse head.
      4. Allow head to dry completely.
   B. Dot matrix head:
      1. Using a cotton swab moistened with a safe low residue cleaner, gently wipe tip of head. NOTE: Be careful not to catch print wires on cotton swab.
      2. Allow head to dry completely.
3. Reinstall printer head.

CHECKLIST

DUTY Maintaining Computer Equipment

TASK Clean printer head.

ENABLER Dust, dirt, paper chips and acculated ink must be remove from printer head so that it will produce clean crisp letters.

STUDENT'S NAME _____ DATE _____

EVALUATOR'S NAME _____ COURSE _____

TIME : STARTED _____ COMPLETED _____

TOTAL _____

DIRECTIONS TO THE EVALUATOR:

Use the following checklist to evaluate student performance when cleaning printer head.

RECORD THIS INFORMATION:

MANUFACTURER: _____ MODEL: _____

SERIAL #: _____

| PERFORMANCE DETERMINANTS | YES | NO |
|---|---|---|
| The preparer | | |
| - Identified the type of printer head. | ____ | ____ |
| - Brushed or blew away any loose dust or dirt. | ____ | ____ |
| - Removed the printer head from the printer. | ____ | ____ |
| - Determined cleaning procedure based on type of head. | ____ | ____ |
| - Removed all ink and dust accumulations from the print head. | ____ | ____ |
| - Removed excess cleaning fluid from print head. | ____ | ____ |
| - Inspected print head for bent or broken parts. | ____ | ____ |
| - Reinstalled printer head. | ____ | ____ |

GUIDE SHEET

DUTY: Maintaining Computer Equipment

---

PERFORMANCE OBJECTIVE #56

TASK: Clean disk drive head

STANDARD OF PERFORMANCE OF TASK:

Oxide material build-up and dust must be removed from drive head.

SOURCE OF STANDARD:

Writing team of incumbent workers.
How To Maintain and Service Your Small Computer.

CONDITIONS FOR PERFORMANCE OF TASK:

Disk drive
Isopropyl alcohol (80-90%)
Cotton swabs
Disk drive cleaning kit
Tool kit

ENABLING OBJECTIVE:

1. Remove oxide build-up from disk drive head.
2. Obtain disk drive head cleaning materials.

*RESOURCES:

1. Stephenson and Cahill. How to Maintain and Service You Small Computer. Howard W. Sams & Company., Inc., Indianapolis, IN, 1983.
2. Manufacturer's operator's manual.
3. Manufacturer's DOS manual.
4. Manufacturer's technical reference.
5. Manufacturer's service manual.
6. Checklist - Clean disk drive head.
7. Visual Aid - Clean disk drive head.

TEACHING ACTIVITIES:

1. Present lecture on oxide and dust build-up on a disk drive head. (*2)
2. Discuss problems caused by oxide and dust build-up on the disk drive head.

TEACHING ACTIVITIES: (cont.)

3. Discuss safety precautions for working on disk drive head.
4. Present lecture on disk drive head cleaning methods. (#1,2,3,4 & 5)
5. Discuss and demonstrate manual disk drive head cleaning procedures.
6. Instruct student to practice the manual disk drive head cleaning.
7. Discuss and demonstrate disk drive head cleaning kit procedures.
8. Instruct student to practice disk drive head cleaning kit procedures.
9. Assign the student a disk drive to be cleaned and disk drive head cleaning materials.
10. Instruct student to clean disk drive head.

CRITERION-REFERENCED MEASURE:

The student will clean the disk drive head using both the manual and cleaning kit methods. The disk drive head must read, write and verify data without error.

PERFORMANCE GUIDE:

A. Manual cleaning:
   1. Power down disk drive.
   2. Remove disk drive case.
   3. Inspect drive head for brownish or yellowish build-up and check for cracks.
   4. Dip cotton swab into alcohol and wipe against the rim of the bottle.
   5. Rub swab across [illegible] of head.
   6. Wipe with second moistened swab to clear away remaining oxide.
   7. Allow alcohol to evaporate.
   8. Replace drive case.
B. Disk drive cleaning kit:
   1. Remove cleaning diskette from protective sleeve.
   2. Open cleaning solution container and dispense just enough solution onto the cleaning diskette to saturate the area exposed by large cut-out in the diskette jacket.
   3. Insert cleaning diskette into drive with label side up and close drive door.
   4. Activate and exercise disk for about 30 seconds.
      NOTE: Disk can be activated by initializing or calling up the directory. If drive stops before 30 seconds repeat the command again.
   5. Remove cleaning diskette from drive after cleaning.

PERFORMANCE GUIDE: (cont.)

NOTE: If cleaning diskette becomes discolored with contamination, discard and use a new cleaning diskette.

CAUTION: Allow drive to sit for a few minutes before using to allow excess cleaning solution to evaporate from drive head.

CAUTION: Excessive use of abrasive cleaning kits can result in permanent damage to drive head.

# CLEANING DISK DRIVE HEAD

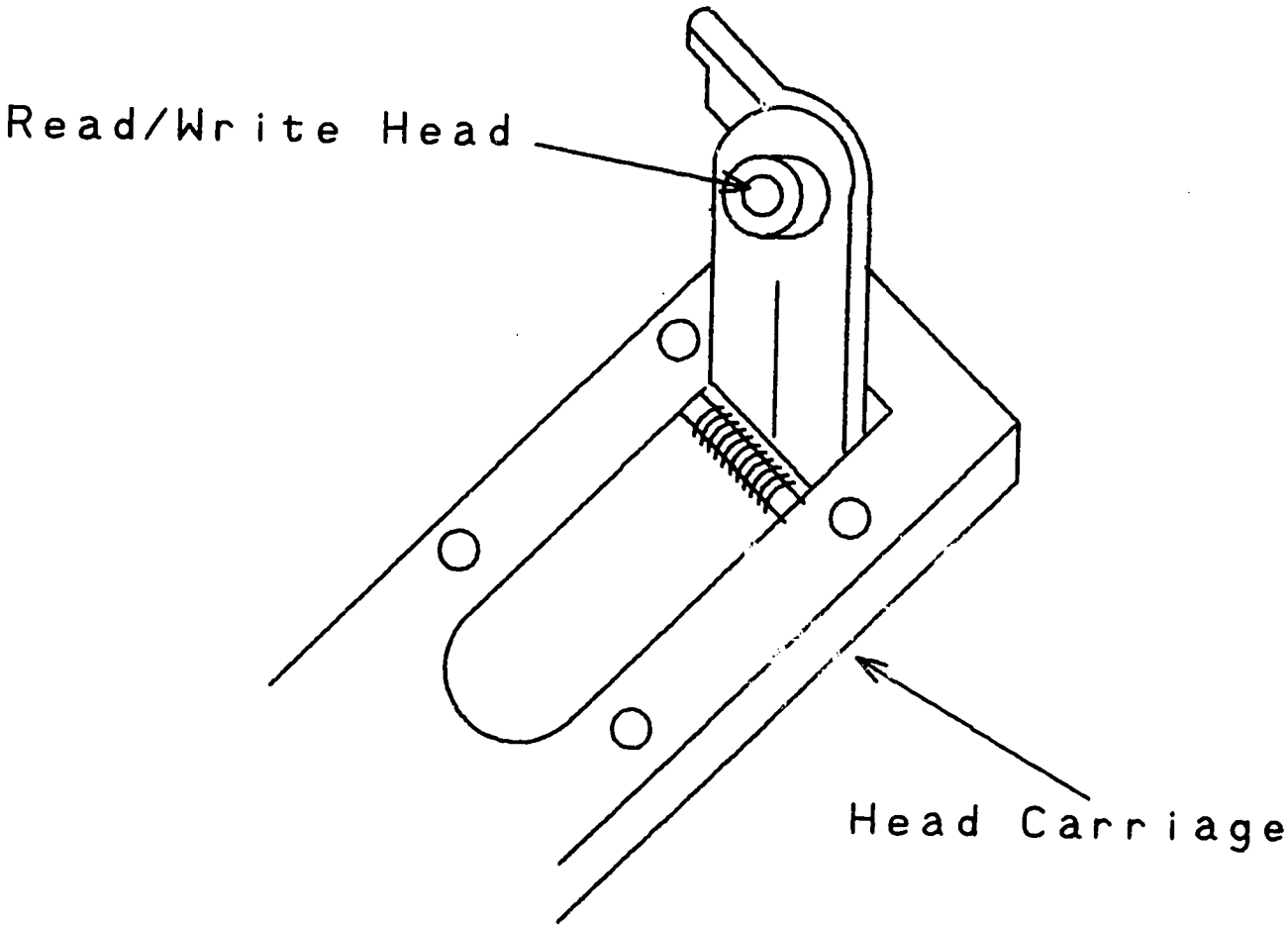


Lift Read/Write Head and clean with denatured alcohol and lint free swab.

CHECKLIST

DUTY Maintaining Computer Equipment

TASK Clean disk drive head.

ENABLER Oxide material build-up and dust must be removed from drive head.

STUDENT'S NAME _____ DATE _____

EVALUATOR'S NAME _____ COURSE _____

TIME : STARTED _____ COMPLETED _____

TOTAL _____

DIRECTIONS TO THE EVALUATOR:

Use the following checklist to evaluate student performance when cleaning disk drive head.

RECORD THIS INFORMATION:

MANUFACTURER: _____ MODEL: _____

SERIAL #: _____

| PERFORMANCE DETERMINANTS | YES | NO |
|---|---|---|
| The preparer | | |
| - Powered down disk drive. | ____ | ____ |
| - Removed disk drive cover. | ____ | ____ |
| - Inspected drive head for build-up and cracks. | ____ | ____ |
| - Cleaned head with alcohol and cotton swab. | ____ | ____ |
| - Replaced drive case. | ____ | ____ |
| - Cleaned disk drive with cleaning kit. | ____ | ____ |
| - Used enough cleaning solution on cleaning diskette to saturate exposed area. | ____ | ____ |
| - Inserted cleaning diskette in drive, label side up, closed the door and activated the system for 30 seconds. | ____ | ____ |
| - Removed diskette after cleaning. | ____ | ____ |

GUIDE SHEET

DUTY: Maintaining Computer Equipment

---

PERFORMANCE OBJECTIVE #57

TASK: Clean and demagnetize tape head.

STANDARD OF PERFORMANCE OF TASK:

Oxide material build-up and dust must be removed from tape head.

SOURCE OF STANDARD:

Writing team of incumbent workers.
How To Maintain and Service Your Small Computer.

CONDITIONS FOR PERFORMANCE OF TASK:

Tape player/recorder to be serviced
Isopropyl alcohol (80-90%)
Cotton swabs
Demagnetizing device

ENABLING OBJECTIVE:

1. Obtain access to tape head.
2. Remove oxide build-up, dust and magnetism from tape head.
3. Obtain demagnetizing device and cleaning materials.

*RESOURCES:

1. Stephenson and Cahill. How To Maintain and Service Your Small Computer. Howard W. Sams and Company, Inc., Indianapolis, IN , 1983.
2. Manufacturer's operator's manual.
3. Manufacturer's technical reference manual.
4. Manufacturer's service manual.
5. Visual aid - Demagnetizing device.
6. Checklist - Clean and demagnetize tape head.

TEACHING ACTIVITIES:

1. Present lecture on oxide and magnetic build-up on tape head. (*1,2,3 & 4)
2. Discuss problems created by dirty tape head.
3. Discuss problem caused by magnetic build-up on a tape head.

TEACHING ACTIVITIES: (cont.)

4. Present lecture on cleaning and demagnetizing tape head. (#1,2,3 & 4)
5. Demonstrate tape head cleaning materials and procedures.
6. Instruct student to practice tape head cleaning procedures using both cotton swab/alcohol/and cassette cleaning methods.
7. Demonstrate tape head demagnetizing devices and procedures. (#5)
8. Instruct student to practice tape head demagnetizing procedures.
9. Assign student a tape player and tape head cleaning and demagnetizing devices.
10. Instruct student to clean and demagnetize the tape head.

CRITERION-REFERENCED MEASURE:

The student will obtain access to tape head, remove oxide build-up and demagnetize tape head and perform an operational check. The tape head must read, write, and verify without error.

PERFORMANCE GUIDE:

1. Position head so it is accessible for cleaning by placing tape player/recorder in the RECORD mode.
2. Dip cotton swab into alcohol and wipe against rim of bottle.
3. Rub swab on heads, capstan, pinch roller, flywheel bearing and rubber drive wheels.
4. Wipe off any excess alcohol.
5. Demagnetize head with battery-powered demagnetizer or a drop-in cassette shaped demagnetizer unit.
6. Press stop button and close door on tape player.

# TAPE HEAD DEMAGNETIZING UNIT

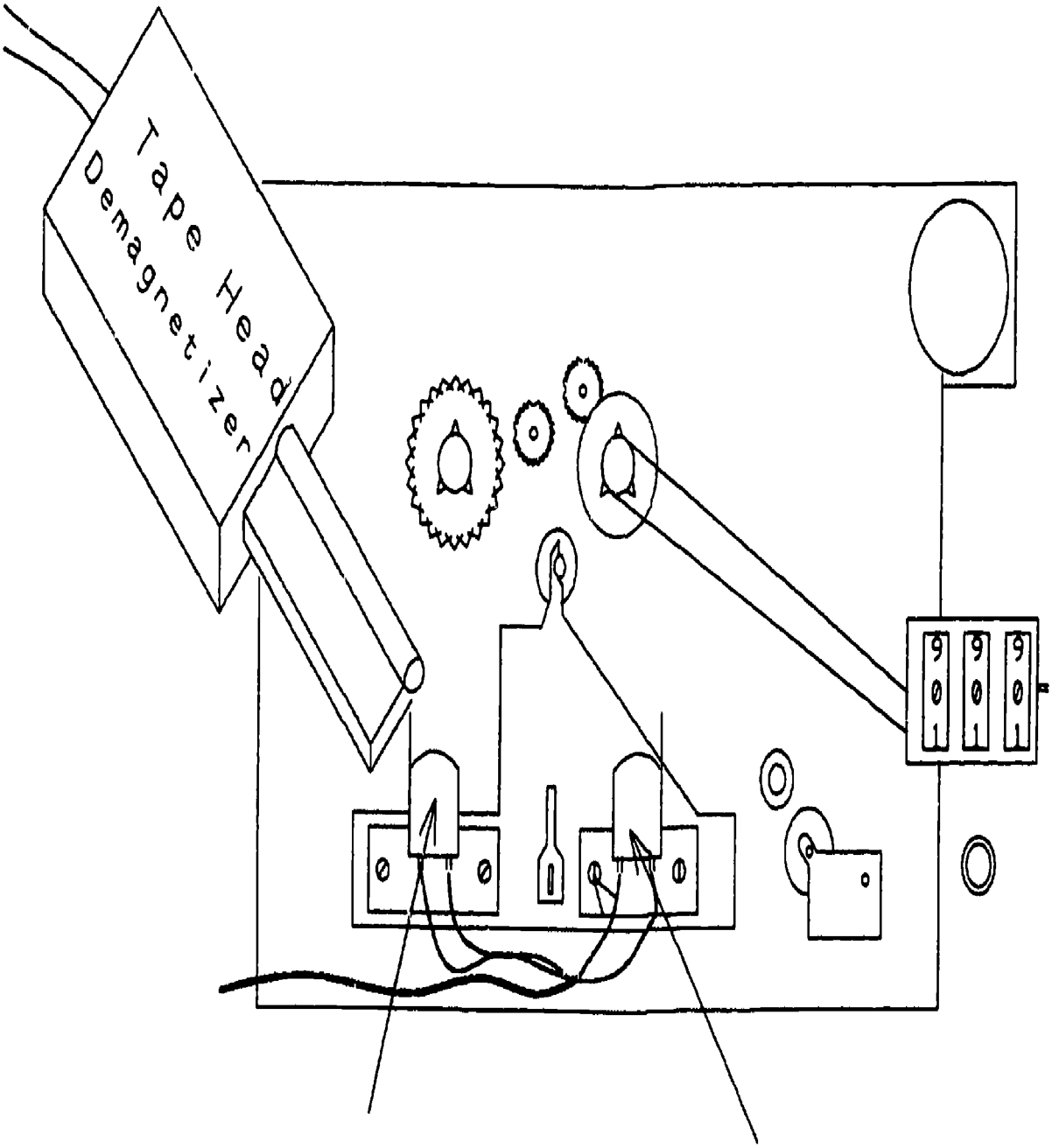

CHECKLIST

DUTY Maintaining Computer Equipment

TASK Clean and demagnetize tape head.

ENABLER Oxide material build-up and dust must be removed from tape head.

STUDENT'S NAME _____ DATE _____

EVALUATOR'S NAME _____ COURSE _____

TIME : STARTED _____ COMPLETED _____

TOTAL _____

DIRECTIONS TO THE EVALUATOR:

Use the following checklist to evaluate student performance when cleaning and demagnetizing tape head.

RECORD THIS INFORMATION:

MANUFACTURER: _____ MODEL: _____

SERIAL #: _____

| PERFORMANCE DETERMINANTS | YES | NO |
|---|---|---|
| The preparer | | |
| - Placed player/recorder in RECORD mode. | ____ | ____ |
| - Identified type of cleaner to be used. | ____ | ____ |
| - Moistened cotton swab with cleaner. | ____ | ____ |
| - Rubbed swab on heads, capstan, pinch roller, flywheel, bearing and rubber drive wheels. | ____ | ____ |
| - Wiped off excessive alcohol. | ____ | ____ |
| - Demagnetized head with battery-powered or drop-in cassette demagnetizer unit. | ____ | ____ |
| - Removed demagnetizer unit from player/recorder. | ____ | ____ |
| - Press stop button and closed door on tape player. | ____ | ____ |

GUIDE SHEET

DUTY: Maintaining Computer Equipment

---

PERFORMANCE OBJECTIVE #56

TASK: Lubricate metallic mechanical parts.

STANDARD OF PERFORMANCE OF TASK:

Metallic mechanical parts must be lubricated to prevent sticking, jamming, and excessive wear.

SOURCE OF STANDARD:

Writing team of incumbent workers.

CONDITIONS FOR PERFORMANCE OF TASK:

Equipment to be serviced
Oil
Grease
Cotton swabs
Tool kit

ENABLING OBJECTIVE:

1. Obtain access to metallic parts to be lubricated.
2. Identify metallic parts to be cleaned lubricated.
3. Determine type of lubrication to be used.

*RESOURCES:

1. Manufacturer's operator's manual.
2. Manufacturer's technical/service manual.
3. Stephenson and Cahill. How to Maintain and Service Your Small Computer. Howard W. Sams and Company, Inc., Indianapolis, IN, 1983.
4. Printer/Terminal, disassembly, and lubrication chart.
5. Visual aid - Lubrication points.
6. Checklist - Lubricate metallic mechanical parts.

TEACHING ACTIVITIES:

1. Present lecture on types of metallic parts and lubricants. (*3)

TEACHING ACTIVITIES: (cont.)

2. Discuss types of metallic mechanical parts lubricated with grease, including gears, sliding parts, rotating cams and shaft sliding through brushing. (*5)
3. Discuss types of metallic mechanical parts lubricated with oil, including part rotating on a stud, bearings, shaft sliding through bushing, pulleys, cable guides and oil reservoirs.
4. Present lecture on metallic mechanical part lubrication procedures. (*1,2,3 & 4)
5. Discuss oil lubrication procedures.
6. Discuss and demonstrate grease lubrication procedures.
7. Instruct student to practice lubrication procedures for metallic mechanical parts.
8. Assign student a piece of computer equipment with metallic parts to be cleaned and lubricated and lubricating materials.

CRITERION-REFERENCED MEASURE:

The student will identify the metallic mechanical parts to be lubricated, determine proper type of lubricant and lubricate the part. Excess lubricant must be removed and the metallic mechanical part must operate smoothly without sticking, jamming or excessive wear.

PERFORMANCE GUIDE:

1. Dismantle equipment so part to be lubricated is assesible.
2. Determine type of part to be lubricated and type of lubricant to be used:
   A. Grease
      a. Gears
      b. Sliding parts.
      c. Rotating cams.
      d. Shaft sliding through bushing.
   B. Oil:
      a. Part rotating on a stud.
      b. Bearings.
      c. Shaft sliding through bushing.
      d. Oil reservoirs.
      e. Pulleys.
      f. Cable guides.
3. Apply a small amount of lubricant to part using a cotton swab.
4. Move part back and forth to distribute lubricant.
5. Wipe off excess lubricant.
6. Reassemble equipment.

# LUBRICATION POINTS

Use Grease To Lubricate
(large spaces between parts)

Gears

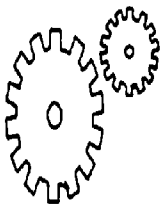

Rotating Cams

Sliding Parts

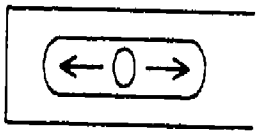

Packed Roller
Ball Bearing

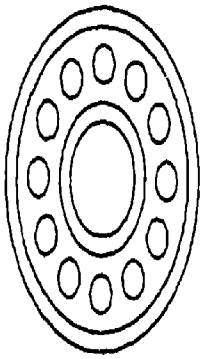

Shaft Sliding
Through Bushing

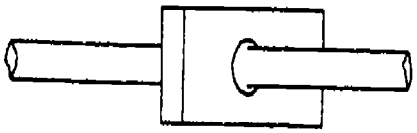

Use Oil To Lubricate
(small/tight spaces between parts)

Shaft Sliding
Through A
Bushing

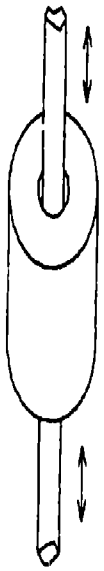

Bearing That
Carries A
Rotating Shaft

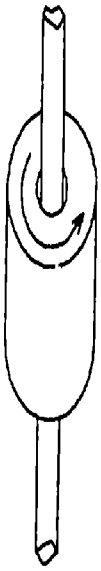

Part Rotating
On A Stud

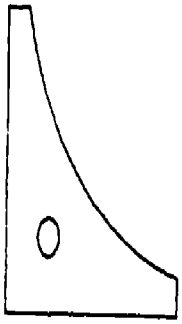

Oil Reservoirs
(felt holds oil)

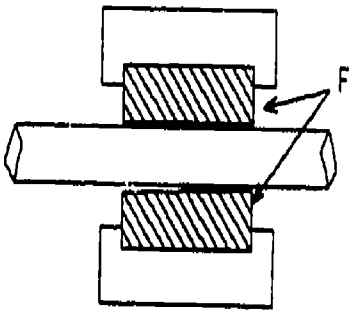


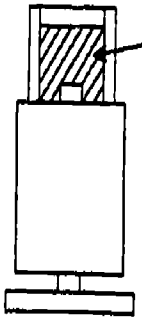


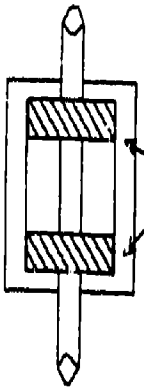

CHECKLIST

DUTY Maintaining Computer Equipment

TASK Lubricate metallic mechanical parts.

ENABLER Metallic mechanical parts must be lubricated to prevent sticking, jamming, and excessive wear.

STUDENT'S NAME _____ DATE _____

EVALUATOR'S NAME _____ COURSE _____

TIME : STARTED _____ COMPLETED _____

TOTAL _____

DIRECTIONS TO THE EVALUATOR:

Use the following checklist to evaluate student performance when lubricating metallic mechanical parts.

RECORD THIS INFORMATION:

MANUFACTURER: _____ MODEL: _____

SERIAL #: _____

| PERFORMANCE DETERMINANTS | YES | NO |
|---|---|---|
| The preparer | | |
| - Dismantled equipment for lubrication. | ____ | ____ |
| - Determined type of part to be lubricated. | ____ | ____ |
| - Determined type of lubrication to be used. | ____ | ____ |
| - Applied lubrication with cotton swab. | ____ | ____ |
| - Distributed lubricant on parts. | ____ | ____ |
| - Removed excess lubricant. | ____ | ____ |
| - Reassembled equipment. | ____ | ____ |

GUIDE SHEET

DUTY: Maintaining Computer Equipment

---

PERFORMANCE OBJECTIVE #59

TASK: Lubricate non-metallic parts

STANDARD OF PERFORMANCE OF TASK:

Non-metallic mechanical parts must be lubricated according to manufacturer's specification to prevent sticking, jamming and wearing of parts.

CONDITIONS FOR PERFORMANCE OF TASK:

Equipment to be serviced
Oil
Technical manual (manufacturer's specification)
Tool kit

ENABLING OBJECTIVE:

1. Remove access covers, EMI/RFZ shields, lubricate non-metallic parts and reassemble.
2. Identify parts that are cleaned and are not lubricated.
3. Identify parts that may be surface lubricated but not soaked.
4. Locate and inspect felt oilers and parts identified as lubricated for life.

*RESOURCES:

1. Equipment Operator Manual.
2. Equipment Technical/Service Manual.
3. Stevenson & Cahill. How to Maintain and Service Your Small Computer. Howard W. Sams & Co., Inc., Indianapolis, IN, 1983.
4. Printer/Terminal, disassembly, and lubrication checklist.
5. Quiz on identification and location of lubrication points.
6. Visual aid - Lubrication points.
7. Checklist - Lubricate non-metallic parts.

TEACHING ACTIVITIES:

1. Read and interpret pre-operation checks.
2. Read and interpret maintenance schedule.

TEACHING ACTIVITIES: (cont.)

3. Present lecture on cleaning materials and lubricants
4. Administer cognative test on non-metallic parts that should not be lubricated or soaked.
5. Administer cognative test on physical location and serviceability criteria of felt washers/rings felt wicks and felt wipers.
6. Demonstrate 'Fingertip' lubrication test for bars and gears.
7. Demonstrate manual (Power-off) position of assemblies.
8. Demonstrate manual movement of assemblies to distribute oil on gears, slides, linkage and rails.
9. Demonstrate wiping of excess lubricants with lintless cloth.
10. Reassemble, and demonstrate off-line exerciser or mini- exerciser.
11. Instruct student to disassemble and lubricate the nonmetallic printer terminal.

CRITERION-REFERENCED MEASURE:

The student will disassemble and lubricate the non-metallic parts of a printer/terminal. All felt oilers will be identified and oiled, mechanical assemblies will be manually positioned to facilitate lubrication. Excess lubricants will be removed, lubricants will be properly distributed by manual movement of parts and equipment must pass off-line exercise test.

PERFORMANCE GUIDE:

1. Dismantle equipment so part to be lubricated is accessible.
2. Determine type of non-metallic part to be lubricated and type of lubricant to be used:
   A. Oil
      a. Felt wick.
      b. Felt ring.
      c. Felt wipers.
      d. Nylon gears.
   B. Self Lubricating:
      a. Delcrin plastic
3. Lubricate part according to manufacturer's specification.
4. Move parts to distribute lubrication.
5. Wipe away excess lubrication.
6. Reassemble equipment.

CHECKLIST

DUTY Maintaining Computer Equipment.

TASK Lubricate Non-Metallic parts.

ENABLER Remove Access Covers, EMI/RFZ shields, lubricate NonMetallic parts and Reassemble.

STUDENT'S NAME _____ DATE _____

EVALUATOR'S NAME _____ COURSE _____

TIME : STARTED _____ COMPLETED _____

TOTAL _____

DIRECTIONS TO THE EVALUATOR:

Discuss manufacturer's warnings, then use the checklist below to evaluate the students performance.

| PERFORMANCE DETERMINANTS | YES | NO |
|---|---|---|
| The preparer | | |
| - Obtained a procedure sheet. | ____ | ____ |
| - Followed power down procedure. | ____ | ____ |
| - Removed access cover and RFI/EMI shields correctly. | ____ | ____ |
| - Removed only those P.C. boards necessary for proper lubrication. | ____ | ____ |
| - Located and lubricated all felt rings/washers, felt wicks and felt wipers. | ____ | ____ |
| - Noted location of factory deposited lubricated for life points. | ____ | ____ |
| - Used the fingertip test where specified by manufacturers manual. | ____ | ____ |
| - Followed proper 3 or 4 drop procedures. | ____ | ____ |
| - Used manual movement of parts to distribute lubricants. | ____ | ____ |
| - Correctly installed RFI/EMI shield. | ____ | ____ |
| - Correctly replaced access cover. | ____ | ____ |
| - Obtained correct off-line exercise test results. | ____ | ____ |

GUIDE SHEET

DUTY: Maintaining Computer Equipment

---

PERFORMANCE OBJECTIVE #60

TASK: Adjust mechanical assemblies.

STANDARD OF PERFORMANCE OF TASK:

Mechanical parts must be adjusted, realigned or relocated to reduce wear and maximize performance.

SOURCE OF STANDARD:

Writing team of incumbent workers.
How To Maintain And Service Your Small Computer.

CONDITIONS FOR PERFORMANCE OF TASK:

Equipment to be serviced
Technical manual (adjustment specification)
Tool kit

ENABLING OBJECTIVE:

1. Interpret "feeler gauge" numbering and convert from Decimal System to Metric System.
2. Identify and locate the Opto-Coupler and solenoid.
3. Identify gear-cuts.
4. Identify and locate print head assembly, carriage assembly and solenoid.
5. Locate RTP and EOP Actuator Arm.
6. Identify line feed clutch, gears, & solenoid.

*RESOURCES:

1. Equipment Operator Manual.
2. Equipment Technical/Service Manual.
3. Stephenson & Cahill. How to Maintain and Service Your Small Computer. Howard W. Sams & Co., Inc. Indianapolis, IN. 1983.
4. Computer Facts. Howard W. Sams & Co., Inc. Indianapolis, IN.
5. Checklist - Adjust mechanical assemblies.

TEACHING ACTIVITIES:

1. Instruct student to do metric to decimal and decimal to metric conversions.

TEACHING ACTIVITIES: (cont.)

2. Demonstrate solenoid anvil, armature, and cam adjustment. (*1,2,3 & 4)
3. Demonstrate use of helical gear alignment tool. (*1,2,3 & 4)
4. Demonstrate different methods of drive belt adjustment. (*1,2,3 & 4)
5. Demonstrate belt tracking adjustment. (*1,2,3 & 4)
6. Demonstrate the removing, cleaning, and replacing of multi-pen cables.(*1,2,3 & 4)
7. Demonstrate release of clamp spring retainer. (*1,2,3 & 4)
8. Emphasize clamp spring cautions. (*1,2,3 & 4)
9. Demonstrate left and right opto-electronic assemblies and carriage arm adjustment. (*1,2,3 & 4)
10. Demonstrate removal of carriage solenoid cam locks. (*1,2, 3 & 4)
11. Demonstrate pulley center-to-center and housing-to-bearing block alignment. (*1,2,3 & 4)
12. Demonstrate carriage drive belt and tension adjustment. (*1,2, 3 & 4)
13. Demonstrate armature-to-releaser gear and armature-to-solenoid adjustment. (*1,2,3 & 4)
14. Demonstrate primary and alternate method of stopper screw adjustment. (*1,2,3 & 4)
15. Demonstrate line feed clutch gear adjustment. (*1,2,3 & 4)
16. Instruct the student to make mechanical adjustments to a computer printer/terminal including belt tension and tracking, pulley placement, gears, cams and actuator levers' tolerances as specified in Technical/Service Manual. (*5)

CRITERION-REFERENCED MEASURE:

The student will make mechanical adjustments to a computer printer/terminal, including: belt tension and tracking, pulley placement, gears, cams, and actuator levers' tolerances as specified in the technical manual.

PERFORMANCE GUIDE:

1. Dismantle equipment so mechanical assembly is accessible.
2. Determine type of mechanical assembly to be adjusted:
   A. Guide wire tension adjustment.
   B. Pulley alignment.
   C. Gear relocation.
   D. Cam adjustment.
   E. Belt tension adjustment.
   F. Drive motor adjustment.
   G. Spring tension adjustment.
3. Adjust according to manufacturer's specifications.
4. Reassemble equipment.

CHECKLIST

DUTY Maintaining Computer Equipment.

TASK Adjust mechanical assemblies.

ENABLER Make mechanical adjustments to a printer terminal.

STUDENT'S NAME _____ DATE _____

EVALUATOR'S NAME _____ COURSE _____

TIME : STARTED _____ COMPLETED _____

TOTAL _____

DIRECTIONS TO THE EVALUATOR:

1. Point out manufacture's notes and cautions on guide wires and spring latches.
2. Show student simultaneous gear adjustment procedures; they may be separated by 3 or 4 pages of figures and charts.

RECORD THIS INFORMATION:

MANUFACTURER: _____ MODEL: _____

SERIAL #: _____

| PERFORMANCE DETERMINANTS | YES | NO |
|---|---|---|
| The preparer | | |
| - Selected proper common tools. | ____ | ____ |
| - Selected proper special tools. | ____ | ____ |
| - Followed power down procedure. | ____ | ____ |
| - Removed access cover properly. | ____ | ____ |
| - Identified and removed EMI/RFI covers. | ____ | ____ |
| - Removed and logic and control circuit boards. | ____ | ____ |
| - Used the feeler-guage for adjustments where required. | ____ | ____ |
| - Checked opto-electronic switches. | ____ | ____ |

PERFORMANCE DETERMINANTS (cont.)

| | YES | NO |
|---|---|---|
| - Aligned pulley to center and pulley to bearing. | ____ | ____ |
| - Followed simultaneous gear alignment procedures. | ____ | ____ |
| - Followed spring tension caution and adjustment procedures. | ____ | ____ |
| - Adjusted guide wire tension. | ____ | ____ |
| - Adjusted clutch, solenoid and feed. | ____ | ____ |
| - Properly stored internal and external lock (Jesus) washers. | ____ | ____ |
| - Followed correct exerciser routine. | ____ | ____ |

TEST ADMINISTRATORS INFORMATION

DUTY Maintaining Computer Equipment

TASK Adjust mechanical assemblies.

ENABLER Make mechanical adjustments to a printer terminal.

Test Environment/Station Set Up:

- Workbench with AC power
- Printer/Terminal
- Exerciser or Mini Exerciser
- Have all special tools required by technical manual
- Have common tools available.
- Use student checklist for evaluation.

Supplies, Equipment and References needed before test:

- Workbench with AC power
- Vacuum cleaner
- Printer/terminal
- Printer paper
- Exerciser/Mini-Exerciser
- Operator/Technical Reference Manual
- Common tools
- Special tools

Time allowed to perform test:

- Manufacturer's standard rate times 150%
- Student starts time: Time spent reading procedure sheet is part of the test.
- Time spent getting tools after student starts time is part of test.

Special Instructions for Administering the test:

- Point out manufacturer's notes and cautions to student.
- You may need to develop procedure sheets for simultaneous adjustments.
- Use the student checklist to evaluate the student.
- Verify the student has read the adjustment instructions and know the exposed parts; "Call-Out" before recording the start time.
- Record total time.
- Grade exerciser routine as part of test.

GUIDE SHEET

DUTY: Maintaining Computer Equipment

---

PERFORMANCE OBJECTIVE #61

TASK: Adjust and align disk drive head.

STANDARD OF PERFORMANCE OF TASK:

Disk drive head alignments will include radial head alignment, track zero sensor adjustment, carriage stop adjustment, index timing adjustment, head load adjustment and raw data adjustment.

SOURCE OF STANDARD:

Writing team of incumbent workers.
How To Maintain and Service Your Small Computer.

CONDITIONS FOR PERFORMANCE OF TASK:

Exerciser disk
Alignment disk
Oscilloscope
Tool kit
Central processing unit
Disk drive
Technical manual (Manufacturer's specifications)

ENABLING OBJECTIVE:

1. Operate an oscilloscope.
2. Interpret standard electronic/TTL symbols.
3. Identify test point on disk drive.
4. Read schematics of controller (Interface) card.
5. Identify and adjust disk drive radial head, track zero sensor, carriage stop, index timing, head load and raw data adjustments.
6. Explain disk format.
7. Troubleshoot and align a disk drive.

*RESOURCES:

1. Stephenson & Cahill. How to Maintain and Service Your Small Computer. Howard W. Sams & Co., Inc. Indianapolis, IN, 1983.
2. Motorola Linear and Interface Manual. Motorola Inc., 1983.

*RESOURCES: (cont.)

3. TTL Databook. (National Semiconductor, Signetics, Intel, or Motorola).
4. Manufacturer's DOS manual.
5. Reinhold Herrmann. The 1541 Repair and Maintenance Handbook. Abacus Software, Grand Rapids, MI. 1985.
6. Oscilloscope operator's manual.
7. Manufacturer's disk drive manual.
8. Computer Facts. Howard W. Sams & Co., Inc., Indianapolis, IN.
9. Disk Drive Analyzer/Analysis Disk.
10. Technical/Service manual.
11. Worksheet - Head component identification.
12. Visual aids - Oscilloscope and test points, head component identification.
13. Checklist - Troubleshooting and aligning disk drive head.

TEACHING ACTIVITIES:

1. Present lecture on electronic TTL symbols. (*3)
2. Assign student to practice groups to familiarize student with TTL symbols and their purpose.
3. Present lecture on disk drive head components. (*1,4,5,7,8, & 10)
4. Conduct a hands-on demonstration of disk drive head components.
5. Conduct a discussion on analog card, disk controller/interface card and MC3470. (*2,4,7 & 8)
6. Conduct a discussion on second source drives.
7. Instruct student to complete head component identification worksheet. (*11)
8. Present lecture on disk drive test points. (*1,4,5,7,8 & 10)
9. Conduct discussion on disk drive test points. (*1,4,7,8, & 10)
10. Demonstrate how to identify disk drive test points.
11. Conduct a class discussion on drive motor, stepper motor and control circuits.
12. Present lecture on diskette structure and format. (*1,4,5,7,8 & 10)
13. Conduct class discussion on diskette structure and format.
14. Instruct student to sketch a diskette showing track and sector locations.
15. Present lecture on the operation of an oscilloscope. (*1,5,6,8, & 12)
16. Demonstrate oscilloscope operating procedures.
17. Present lecture on how to adjust and align a disk drive head. (*1,4,5,7,8,9,10 & 12)
18. Conduct demonstration on disk drive head adjustment and alignment procedures.
19. Instruct student to adjust and align a disk drive head. (*13)

CRITERION-REFERENCED MEASURE:

The student will troubleshoot and align a disk drive, including subassemblies, major assemblies, drive components, and electronic boards. After alignment, the disk drive can read/write to the disk for use on other disk drives of same format. All items on the performance checklist are adjusted to manufacturer and dash number specifications.

PERFORMANCE GUIDE:

1. Obtain disk drive to be serviced.
2. Remove disk drive cover.
3. Determine necessary adjustments and alignments:
   A. Radial head alignment
   B. Track zero sensor adjustment
   C. Carriage stop adjustment
   D. Index timing adjustment
   E. Head load adjustment
   F. Raw data adjustment
4. Make needed alignments and adjustments.
5. Replace cover.
6. Test drive to determine if it is reading, writing and verifying correctly.

# OSCILLOSCOPE HEAD TESTING

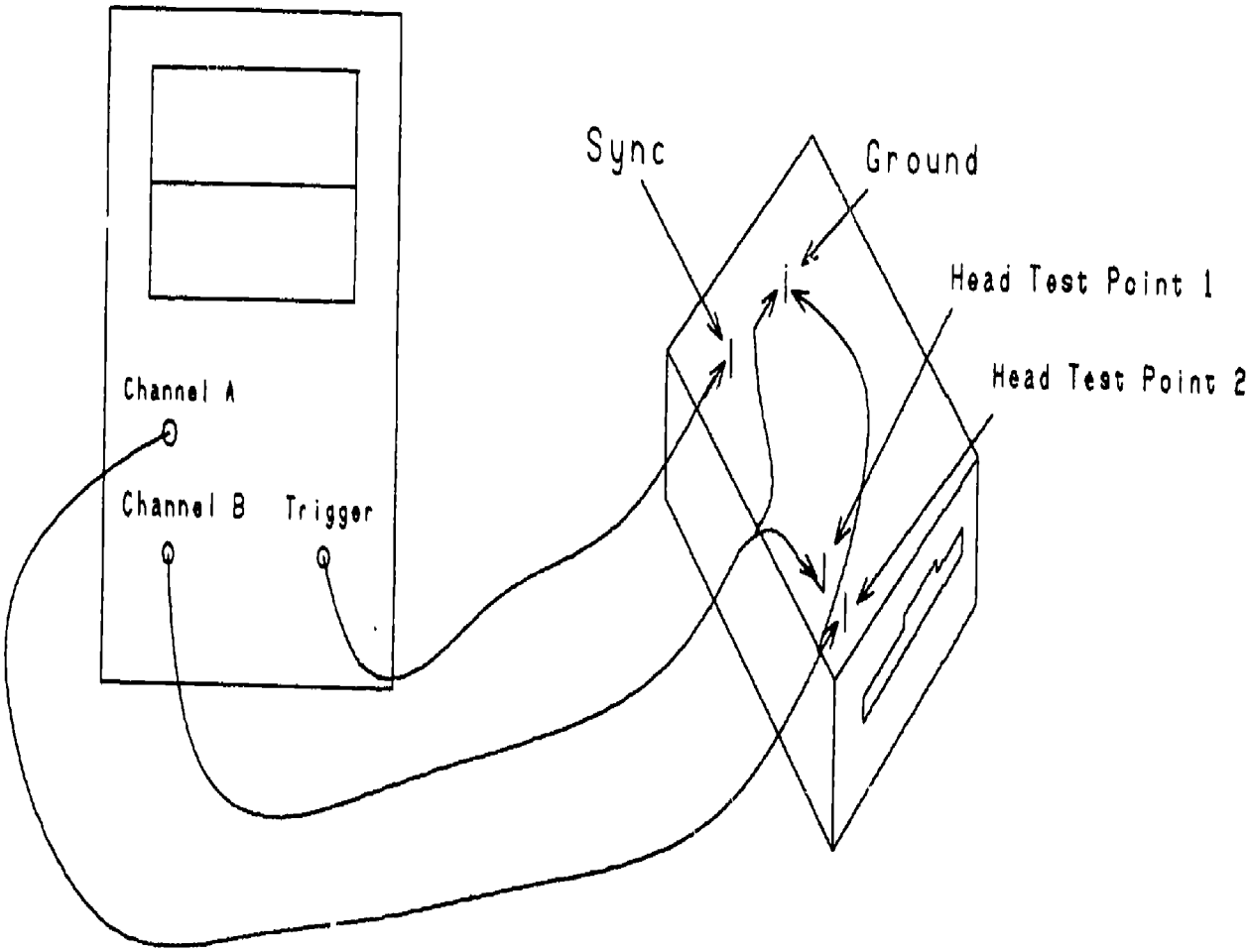


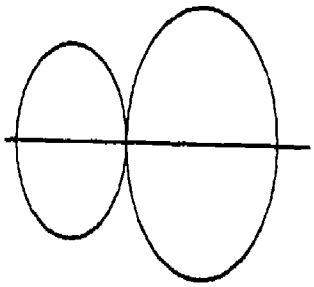

Head is off track towards track 0.

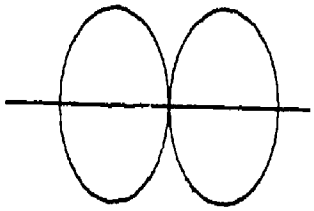

Head is on track.

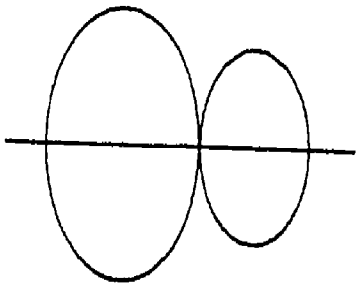

Head is off track towards inside track.

# RADIAL HEAD PART IDENTIFICATION

## PULLEY ADJUSTMENT

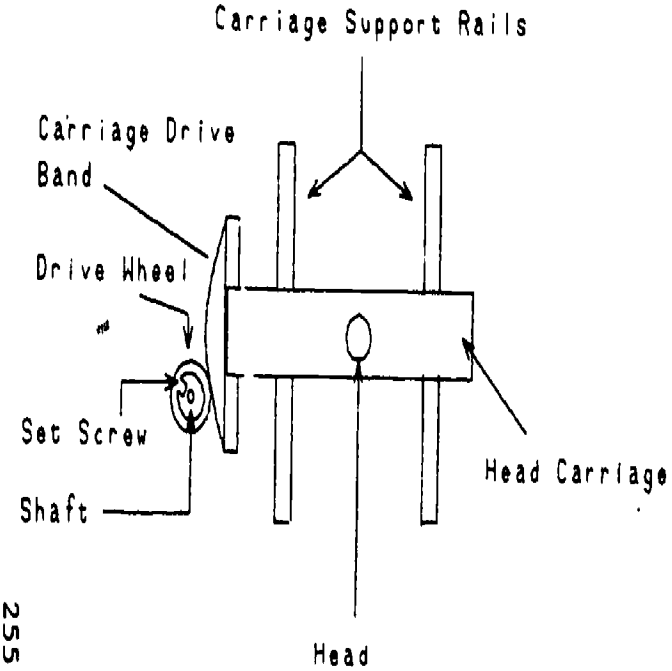


TOP VIEWS
(without disk)

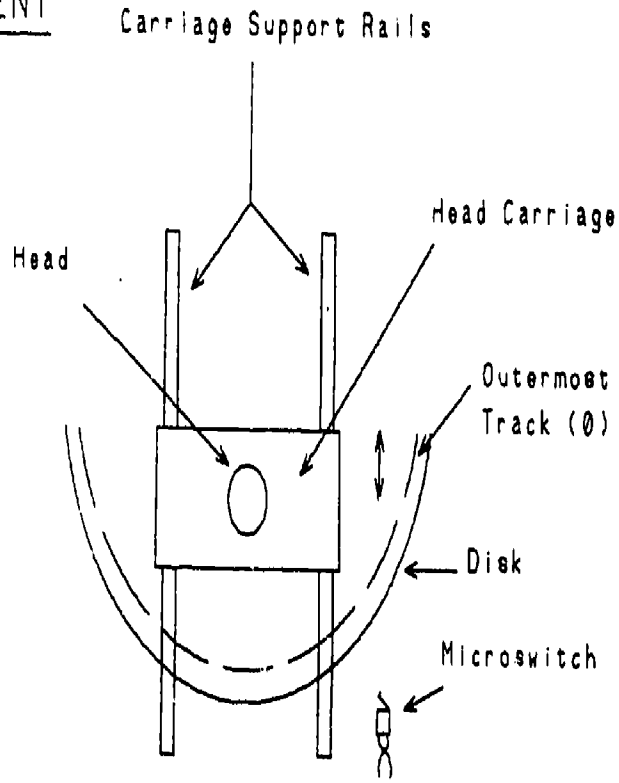


TOP VIEW
(with disk)

## STEPPER MOTOR ADJUSTMENT

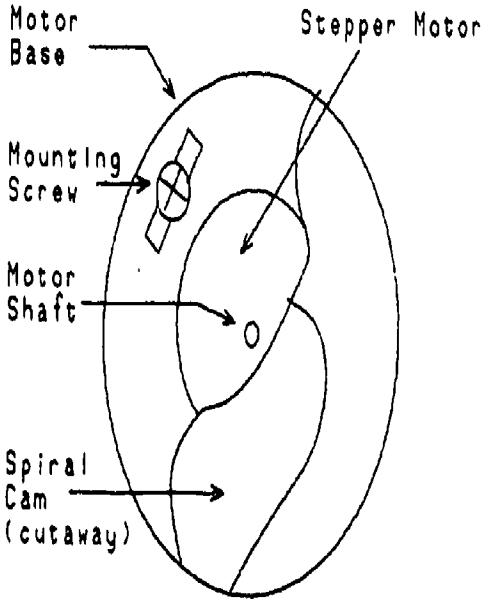


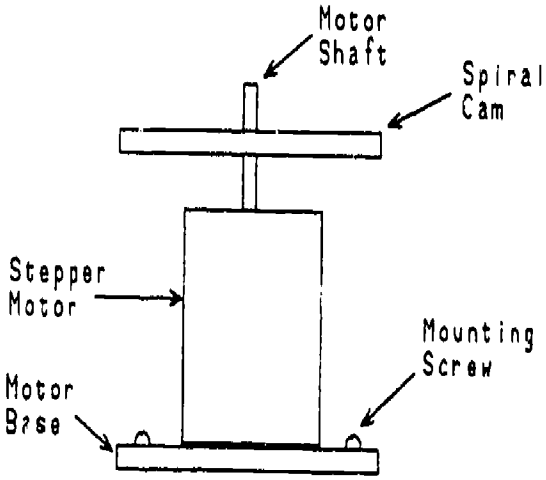


SIDE VIEW

# WORKSHEET

TITLE: Drive Head Component Identification Worksheet.

DIRECTIONS: Fill in the component name indicated by the arrow.

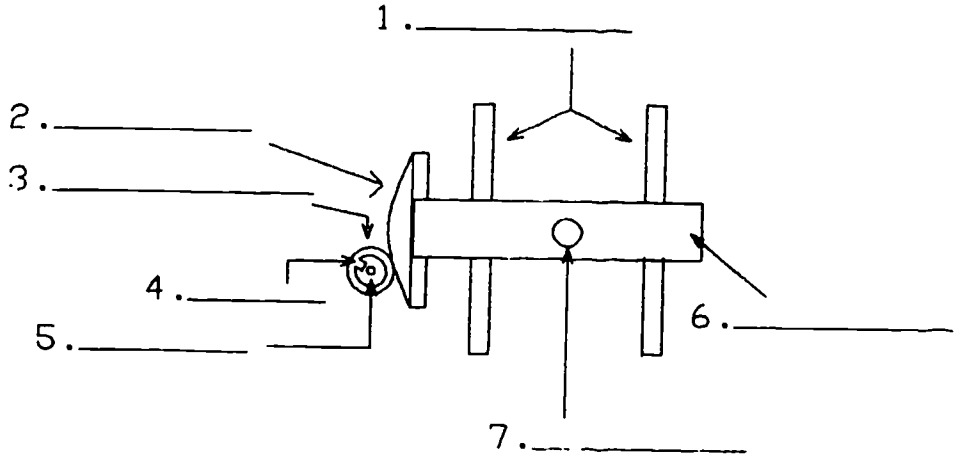


TOP VIEWS
(without disk)

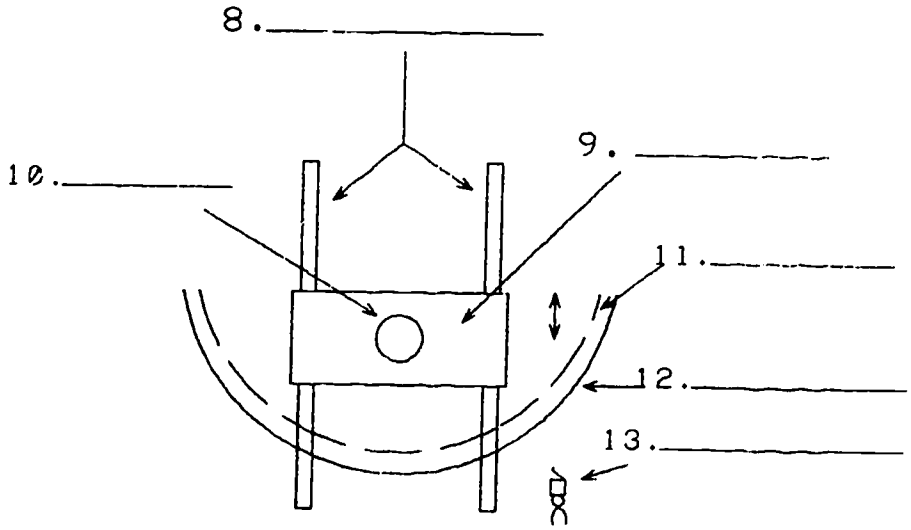


TOP VIEW
(with disk)

## WORKSHEET ANSWERS

1. Carriage Support Rails
2. Carriage Drive Bands
3. Drive Wheel
4. Set Screw
5. Shaft
6. Head Carriage
7. Head
8. Carriage Support Rails
9. Head Carrige
10. Head
11. Outermost Track (0)
12. Disk
13. Microswitch

CHECKLIST

DUTY Maintaining Computer Equipment

TASK Adjust and align disk drive ' ead.

ENABLER Trouble and align a disk drive.

STUDENT'S NAME _____ DATE _____

EVALUATOR'S NAME _____ COURSE _____

TIME : STARTED _____ COMPLETED _____

TOTAL _____

DIRECTIONS TO THE EVALUATOR:

1. The student must be competent on oscilloscope.
2. The student must know disk formats.

RECORD THIS INFORMATION:

MANUFACTURER: _____ MODEL: _____

SERIAL #: _____

| PERFORMANCE DETERMINANTS | YES | NO |
|---|---|---|
| The preparer | | |
| - Verified operation of associated computer. | ____ | ____ |
| - Verified I/O port or controller card. | ____ | ____ |
| - Selected operable source disk drive for diagnostic test. | ____ | ____ |
| - Used correct termination disk drive or terminated cable slot. | ____ | ____ |
| - Used correct slot/drive number or default for source drive. | ____ | ____ |
| - Designated the D.U.T drive as drive No.2. | ____ | ____ |
| - Removed disk drive cover and base cover. | ____ | ____ |
| - Ran diagnostics disk. | ____ | ____ |

| PERFORMANCE GUIDE: (cont.) | YES | NO |
|---|---|---|
| - Followed monitor instructions. | ____ | ____ |
| - Made radial adjustment. | ____ | ____ |
| - Readied oscilloscope to indicate proper position of stepper motor. | ____ | ____ |
| - Made carriage stop adjustment to "Ballpark" track zero (0). | ____ | ____ |
| - Properly aligned LED/Sensor track and sector detector. | ____ | ____ |
| - Followed diagnostic instructions for firmware driven 0. | ____ | ____ |
| - Checked felt head load pad for pressure and service ability. | ____ | ____ |
| - Monitored raw data, interpreted oscilloscope trace, adjusted active filter/peak detector network. | ____ | ____ |
| - Made azimuth test, adjusted to specifications or replace head. | ____ | ____ |
| - Powered down disk drive. | ____ | ____ |
| - Replaced all covers. | ____ | ____ |
| - Tested drive for save/load. | ____ | ____ |
| - Tested portability of disk. | ____ | ____ |

# TEST ADMINISTRATORS INFORMATION

DUTY Maintaining Computer Equipment

TASK Adjust & align disk drive head.

ENABLER Trouble and align disk drive.

Test Environment/Station Set Up:

- Workbench with AC power
- Complete computer system
- Functional 5 1/4" disk drive.
- Misaligned 5 1/4" disk drive
- Alignment disk
- Oscilloscope with 10:1 test probe
- Common tools

Supplies, Equipment and References needed before test:

- Exercise (scratch) disk
- Diagnostic disk
- Terminating cable (If Required)
- Terminating Disk-Drive (If required)
- Oscilloscope with 10:1 test probe
- Common tool kit
- Time allowed to perform test:
- One hour maximum (For units with on-board C.P.U and On-board power supply). Student indicates starting time after checking out cables, computer, source drive and oscilloscope if pressure pad (load) is incorrect (on throw away pads) or Azimuth (read/write head) is incorrect-stop time.

Special Instructions for Administering the test:

- On some disk driver, the write protect microswitch has been replaced by a photo transistor or infra-red circuit.
- On some disk drives, the disk stop has been eliminated
- Enter manufacture and SN on checksheet.
- Use the check sheet to evaluate student.
- Record starting time and completion time.
- Discuss "Out of Sequence" adjustments.
- Record total time for task completion on checksheet.

GUIDE SHEET

DUTY: Maintaining Computer Equipment

---

PERFORMANCE OBJECTIVE #62

TASK: Adjust and align tape head.

STANDARD OF PERFORMANCE OF TASK:

Tape player/recorder adjustments must include tape head adjustment, continuity in audio circuitry adjustment, and cables and connectors alignment.

CONDITIONS FOR PERFORMANCE OF TASK:

Tape player/recorder to be serviced
Tool kit
Alignment tape
Oscilloscope

ENABLING OBJECTIVE:

1. Remove tape transport cover, adjust azimuth, reassemble and test run.
2. Identify the three basic cassette interface types by name and explain their characteristics.

*RESOURCES:

1. Stephenson & Cahill. How to Maintain and Service Your Small Computer. Howard W. Sams & Co., Inc., Indianapolis, IN. 1983.
2. Cassette Tape, Azimuth Calibration, Cook Laboratories, Inc. CT.
3. NCR Data Communications Concepts. Technical Publications Department, Howard W. Sams & Co., Inc. Indianapolis, IN.
4. Basic Computer Language. Radio Shack, Fort Worth TX.
5. The Applesoft Tutorial. Apple Computer, Inc., Cupertino, CA.
6. Commodore User's Manual. Commodore Business Machines, Inc., Wayne, PA.
7. Data Set Recorder, Commodore Business Machines, Inc., Wayne, PA.
8. TDK Model HD-01 Electronic Head Demagnetizer, TDK.

RESOURCES (cont.)

9. Visual aids - Kansas City interface Frequencies, Tarbell Interface and Tape Head Assembly.
10. Checklist - Adjust and align tape head.

TEACHING ACTIVITIES:

1. Demonstrate the construction of Coaxial Jumper Sets: 1/4" phone plug-to-RCA; 1/4" phone plug-to-miniature phone plug; RCA-to-miniature phone plug; miniature phone plug to miniature phone plug.
2. Demonstrate battery test procedure for peeker/limiter/VU monitor. (#3 & 4)
3. Demonstrate actual sound volume for a sound level of 5 VU units. (#3 & 4)
4. Demonstrate correct Azimuth adjustment and increase in sound level. (#2)
5. Demonstrate difference in output levels of commercial cassette programs and user "saved" cassette programs.
6. Demonstrate the effect of baud rate on save amplitude.
7. Develop transparency of "Kansas City" interface frequencies. (#9)
8. Develop transparency of "Tarbell" interface.
9. Discuss the Commodore Business Machine Cassette I/O, and the Schmitt Trigger Concept. (#6 &7)
10. Discuss Transistor Audio Amplifiers.
11. Discuss Integrated Circuit Audio Amplifiers. (#3 & 4)
12. Discuss Tone and Volume Controls. (#1,3,4,5, & 7)
13. Instruct student to adjust and align tape head. (#10)

CRITERION-REFERENCED MEASURE:

The student will disassemble a cassette recorder for access to tape head. After identification of the Azimuth and Zenith hardware, Azimuth is adjusted for maximum output. The recorder is reassembled and tested in C save and or default modes. The cassette is transportable to another properly aligned recorder.

PERFORMANCE GUIDE:

1. Obtain tape player/recorder to be serviced.
2. Determine necessary adjustments and alignments:
   A. Tape head adjustments.
   B. Continuity in audio circuitry adjustments.
   C. Cables and connector alignment.
3. Adjust according to manufacturer's specifications.

CHECKLIST

DUTY Maintaining Computer Equipment.

TASK Adjust and align tape head.

ENABLER Remove tape transport cover, adjust azimuth, reassemble and test run.

STUDENT'S NAME _____ DATE _____

EVALUATOR'S NAME _____ COURSE _____

TIME : STARTED _____ COMPLETED _____

TOTAL _____

DIRECTIONS TO THE EVALUATOR:

The student must be competent on oscilloscope and know the three basic cassette interface types by name and characteristics.

RECORD THIS INFORMATION:

MANUFACTURER: _____ MODEL: _____

SERIAL #: _____

| PERFORMANCE DETERMINANTS | YES | NO |
|---|---|---|
| The preparer | | |
| - Selected tools. | ____ | ____ |
| - Disassembled unit including cassette cover. | ____ | ____ |
| - Inserted test tape. | ____ | ____ |
| - Connected external VU meter to " ear " or phone jack. | ____ | ____ |
| - Adjusted azimuth for maximum output. | ____ | ____ |
| - Turned off cassette recorder. | ____ | ____ |
| - Reassembled unit. | ____ | ____ |
| - Connected recorder to any computer except dataset type. | ____ | ____ |
| - Saved program on tape. | ____ | ____ |
| - Loaded program from tape. | ____ | ____ |
| - Made the program transportable to another cassette recorder. | ____ | ____ |

TEST ADMINISTRATORS INFORMATION

DUTY Maintaining Computer Equipment.

TASK Adjust and align tape head.

ENABLER Remove tape transport cover, adjust azimuth, reassemble and test run.

Test Environment/Station Set Up:

- Workbench with AC power.
- Complete computer system.
- Limiter/VU Box.
- Oscilloscope.
- Commercial cassette recorder.

Supplies, Equipment and References needed before test:

- Operator/User's manual.
- Common tool kit.
- Blank cassette tapes.
- Coaxial cables.
- Cassette recorder to be adjusted.
- Computer system.
- Test cassette recorder.
- Peaker/limiter/VU monitor.

Time allowed to perform test:

- 150 percent of flat rate time.
- Time stopped for cassette transport covers of non standard design.
- Time stopped if student needs to look up DINOUT of DIN plugs and color code.

Special Instructions for Administering the test:

- If you do not have a Peaker/Limited/VU monitor, you can fabricate using a LM 358 and salvaged VU meter.
- Record starting time and completion time on the checklist
- Use the checklist to evalutate the student.
- If time is stopped, note as a remark on the bottom of the checklist.
- Record total task time on checklist.
- Discuss checklist with student.

GUIDE SHEET

DUTY: Maintaining Computer Equipment

---

PERFORMANCE OBJECTIVE #63

TASK: Set disk read/write/verify speed.

STANDARD OF PERFORMANCE OF TASK:

Disk drive read/write/verify speed must be set so that drive is running at optimum speed according to strobe line pattern or screen scale pointer.

CONDITIONS FOR PERFORMANCE OF TASK:

Floppy disk drive to be serviced
Tool kit
Flourescent light
Central processing unit
Disk drive
Computer monitor

ENABLING OBJECTIVE:

1. Dissassemble a disk drive, correct speed adjustment, and reasemble.
2. Explain physical design of 50HZ/60HZ strobe decal.
3. Locate and adjust drive motor speed adjustment potentiometer.

*RESOURCES:

1. Stephenson & Cahill. How to Maintain and Service Your Small Computer. Howard W. Sams & Co. Inc., Indianapolis, IN. 1983
2. Student fabricated strobe light using a NE51 lamp, 22K resistor, AC power cord, and shell from papermate pen.
3. Small single tube flourescent light unit, Department store.
4. Disk Drive Analyzer (Apple-Non Proprietary). Silicon Express. Columbus, OH.
5. RPM to the Rescue. (TRS-80-Non Proprietary) Prosoft. Hollywood, CA.
6. System Diagnostics. (TRS-80-Non Proprietary). Howe Software. New York, NY.
7. Disk Drive Alignment. CSM. Universal Software. Claremont, NH.

*RESOURCES: (cont.)

8. The Anatomy of The 1541. Abacus Software. Grand Rapids, MI.
9. 1541 Repair and Maintenance Handbook. Abacus Software. Grand Rapids, MI.
10. 1541 Physical Exam. Cardinal Software. Wood Bridge, VA.
11. Visual aid - Strobe Light.
12. Checklist - Drive Motor Speed Adjustment.

TEACHING ACTIVITIES:

1. Fabricate strobe light using NE51 neon lamp and series dropping resistor. (*2,3 & 11)
2. Discuss and show a scale drawing (transparency) of 50Hz/60H drive motor speed decal.
3. Demonstrate 60Hz "Stopped" speed adjustment.
4. Demonstrate commercial diskette program for RPM (speed) adjustment. (*5,6,7,8,9, & 10)
5. Demonstrate correlation accuracy of strobe light motor speed adjustment, and diskette program speed adjustment. (*5,6,7,8,9, & 10)
6. Instruct student to disassemble disk drive, and adjust drive motor speed, using a strobe lightspeed adjustment, and diskette program speed adjustment. (*12)

CRITERION-REFERENCED MEASURE:

The student will remove the chassis cover and base cover from a disk drive, adjust the drive motor speed by strobe light. Adjustment is within +one scale mark on commercial diskette diagnostic program.
Disk drive is reassembled and tested. Disk read/write/verify is transportable to a like format disk drive unit.

PERFORMANCE GUIDE:

1. Power down system.
2. Remove drive case and place drive on its side.
3. Power up system, insert disk in drive and boot:
   A. Manual adjustment:
      1. Locate pattern of radial lines on the bottom of the drive pulley.
      2. Hold a flourescent light above the disk drive and watch the pattern of lines.
         NOTE: If the lines seem to stand still, the speed is correct. If the lines appear to rotate one way or another, the motor speed istoo fast or too slow.
      3. Locate the motor speed adjustment screw. Turn a few degrees one way and then the other and observe the effect on the strobe pattern lines.

PERFORMANCE GUIDE: (cont.)

4. Adjust the screw until the lines appear to stop turning. (No more than one full turn should be needed.)

B. Diagnostic disk adjustment:

1. Observe pointer scale on monitor.

NOTE: If pointer is in the center of the scale then the speed is ideal. If the pointer is to the left or right, the speed is too fast or too slow.

2. Locate the motor speed adjustment and turn adjusting screw a few degrees one way and then the other.

3. Adjust the screw until the pointer is in the center of the scale.

4. Power down system and remove disk from drive.

5. Replace disk drive cover.

# MOTOR SPEED ADJUSTMENT

## Strobe Disk Action

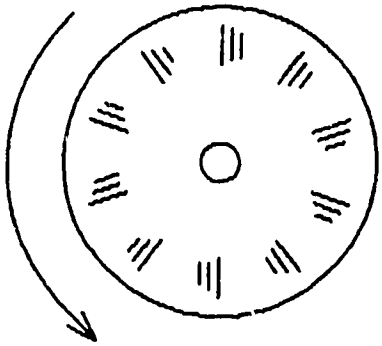

Lines moving counterclockwise - speed too fast.

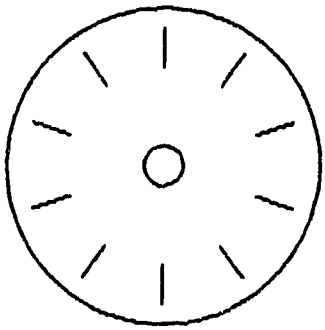

Lines are still - drive speed is correct.

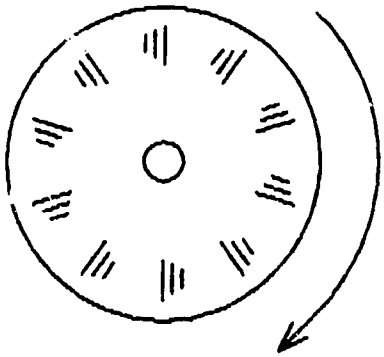

Lines are moving clockwise - speed too slow.

## Motor Speed Adjustment Potentiometer

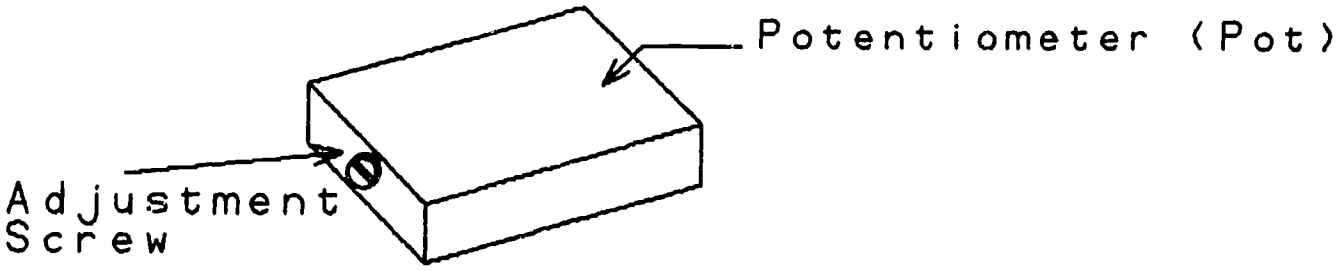

CHECKLIST

DUTY Maintaining Computer Equipment.

TASK Set disk read/write/verify speed.

ENABLER Adjust drive motor speed.

STUDENT'S NAME _____ DATE _____

EVALUATOR'S NAME _____ COURSE _____

TIME : STARTED _____ COMPLETED _____

TOTAL _____

DIRECTIONS TO THE EVALUATOR:

Record disk drive model on the checklist if strobe decal is not labeled, the outside spoke pattern is for 60HZ power.

| PERFORMANCE DETERMINANTS | YES | NO |
|---|---|---|
| The preparer | | |
| - Observed if the system with one disk drive passed cold start diagnostics. | ____ | ____ |
| - Followed power down procedure. | ____ | ____ |
| - Removed chassis cover and base cover. | ____ | ____ |
| - Identified 60HZ strobe pattern. | ____ | ____ |
| - Properly connected DUT to system. | ____ | ____ |
| - Inserted scratch disk in DUT. | ____ | ____ |
| - Energized system for cold start. | ____ | ____ |
| - Selected speed adjustment on diskette menu. | ____ | ____ |
| - Adjusted drive motor strobe and speed. | ____ | ____ |
| - Compared drive motor speed to monitor scale. | ____ | ____ |
| - Powered down system. | ____ | ____ |
| - Reassembled disk drive. | ____ | ____ |
| - Tested read/write/verify for transport ability to another drive. | ____ | ____ |

TEST ADMINISTRATORS INFORMATION

DUTY Maintaining Computer Equipment

TASK Set disk read/write/verify speed.

ENABLER Adjust drive motor speed.

Test Environment/Station Set Up:

- Workbench with AC power
- Functional computer system with disk drive
- Common tool kit
- Strobe light and flourescent light
- Diskette Program; RPM/Diagnostics
- Disk drive to be adjusted

Supplies, Equipment and References needed before test:

- Scratch disk
- Technical Reference manual
- Operators manual
- RPM/Diagnostics disk
- Strobe light
- Screw drivers, tunign wand (Tweeker), jeweler's screwdriver
- Computer system
- Compu Trace or Manufacturer's schematics.

Time allowed to perform test:

- Maximum time 20 minutes.
- Student indicates start time.
- System power up and cold start diagnostics do not count as test time.

Special Instructions for Administering the test:

- Student should know both the strobe light and diskette method of drive motor RPM adjustment.
- Student checklist uses the diskette speed diagnostics to validate accuracy of manual adjustment.
- Use the checklist to evaluate the student.

GUIDE SHEET

DUTY: Maintaining Computer Equipment

---

PERFORMANCE OBJECTIVE #64

TASK: Set tape read/write/verify speed.

STANDARD OF PERFORMANCE OF TASK:

Tape read/write/verify speed must be set so that tape tension runs at an equilibrium between supply spindle and take up spindle.

SOURCE OF STANDARD:

Writing team of incumbent workers.
How To Maintain and Service Your Small Computer.

CONDITIONS FOR PERFORMANCE OF TASK:

Tape player/recorder to be serviced
Tool kit
Exercise tape

ENABLING OBJECTIVE:

1. Locate the drive motor and drive motor speed adjustment.
2. Locate the take-up spindle, spindle clutch or rider, and adjusting screw.

*RESOURCES:

1. Stephenson & Cahill. How to Maintain and Service Your Small Computer. Howard W. Sams & Co.,Inc. Indianapolis, IN., 1983.
2. Operator's Manual.
3. Technical Manual.
4. Comprehensive Cross Reference Belt Guide, Projector-Recorder Belt Corp, Whitewater, WI.
5. Visual aid of tape transport.
6. Worksheet on tape transport parts identification.
7. Checklist - Drive motor speed adjustment.

TEACHING ACTIVITIES:

1. Play contemporary music tape on recorder with a motor that is turning slow.

TEACHING ACTIVITIES: (cont.)

2. Play contemporary music tape on recorder with a motor that is turning fast.
3. Demonstrate and discuss motor "Shock Mounts". (*1,2 & 3)
4. Demonstrate and discuss motor speed adjustment. (*1,2,3 & 4)
5. Show location of spindle clutch adjustment. (*5)
6. If hardware permits show:
   A. Clutch adjustment from bottom of cassette transport with tape moving.
   B. Clutch adjustment from cassette compartment, through access hole without tape. A trial and error method.
7. Demonstrate correct tape equilibrium. (*1,2,3 & 4)
8. Instruct the student to complete tape transport parts identification worksheet. (*6)
9. Instruct the student to disassemble recorder unit and adjust motor drive speed. (*7)

CRITERION-REFERENCED MEASURE:

The student will disassemble a commercial cassette player/recorder, adjust motor drive speed, clutch drag, then reassemble and test for correct sounding speed and supply take-up equilibrium.

PERFORMANCE GUIDE:

1. Power up tape player/recorder.
2. Place tape in player/recorder and press play button.
3. Listen to the audio output; if the audio sounds sluggish, the motor is running to slow. If the audio sounds rapid, the motor is running to fast.
4. Locate motor speed adjustment in recess at one end of motor casing and turn a few degrees in one direction, then the other direction until the audio sounds best.
5. Observe take-up spindle and supply spindle and determine if they are operating at equilibrium.
6. Tighten the tension on clutch mechanism under the take-up wheel when the spindle is moving too slow (loose, excess tape inside tape case). Loosen the tension on the clutch mechanism when the supply spindle is moving too slow (tape is being stretched).
7. Power down tape player/recorder and remove tape.

TAPE TRANSPORT MECHANICAL COMPONENTS LOCATION
EXTERNAL VIEW

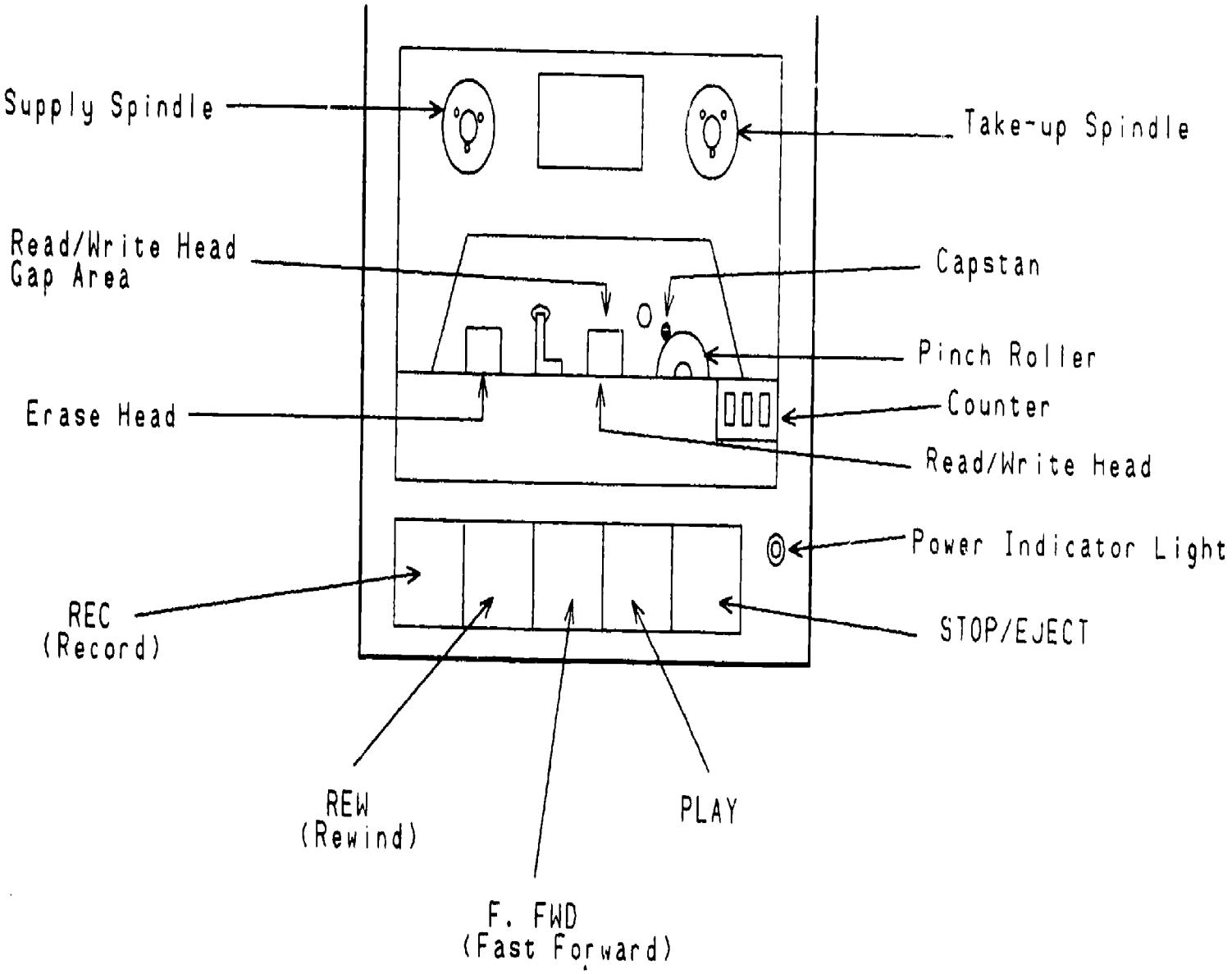

WORKSHEET

TITLE: Tape Transport Components.

DIRECTIONS: Fill in the component name indicated by the arrow.

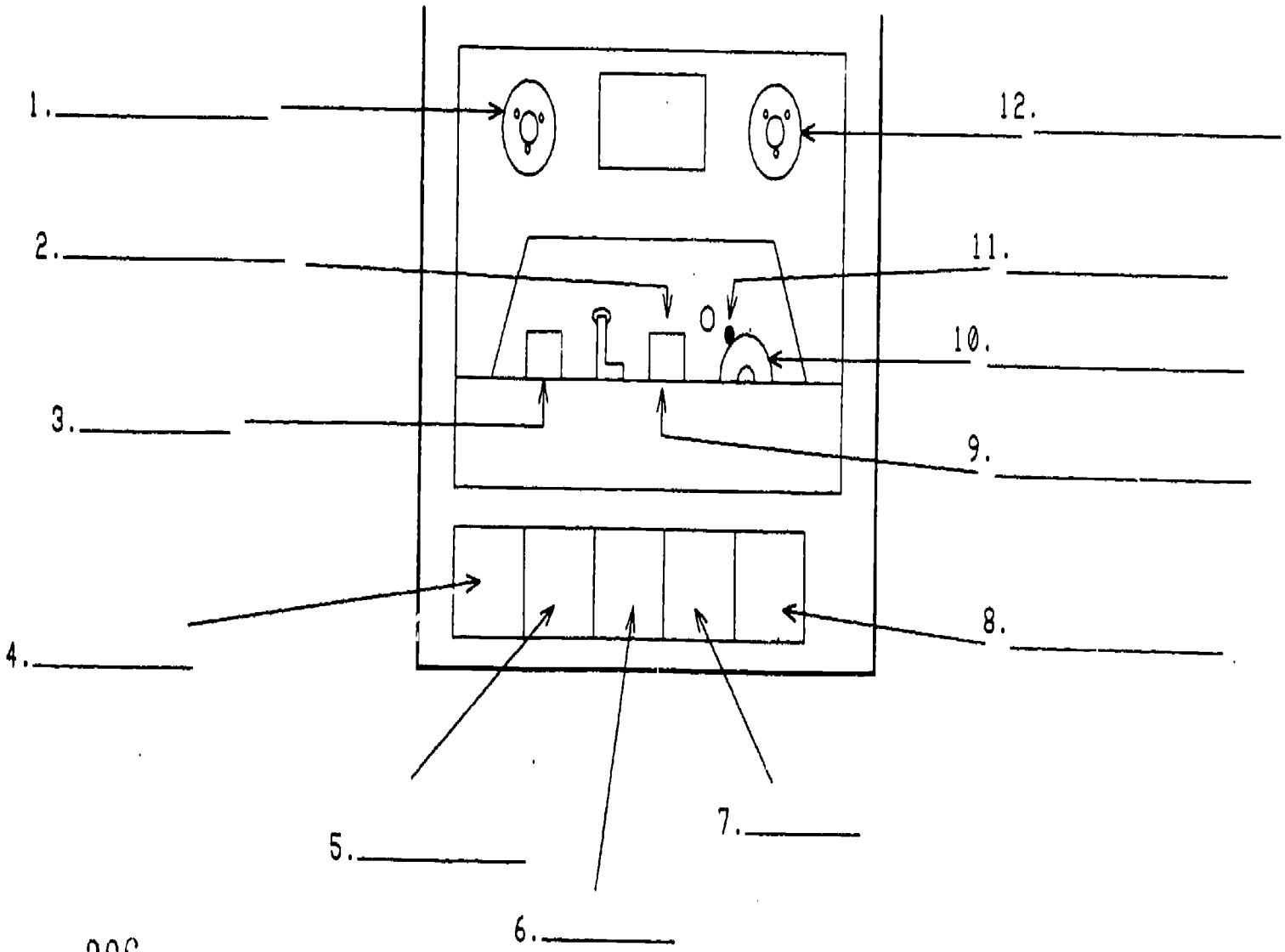

STUDENT WORKSHEET ANSWERS

1. Supply Spindle
2. Read/Write Head Gap Area
3. Erase Head
4. REC(Record)
5. REW(Rewind)
6. F. FWD(Fast Forward)
7. PLAY
8. STOP/EJECT
9. Read/Write Head
10. Pinch Roller
11. Capstan
12. Take-up Spindle

CHECKLIST

DUTY Maintaining Computer Equipment.

TASK Set tape read/write/verify speed.

ENABLER Adjust drive motor speed on recorder unit.

STUDENT'S NAME _____ DATE _____

EVALUATOR'S NAME _____ COURSE _____

TIME : STARTED _____ COMPLETED _____

TOTAL _____

DIRECTIONS TO THE EVALUATOR:

1. Student may supply test tape.
2. Instruct student to set tape read/write/verify speed so that tape tension runs at an equilibrium between supply and take up spindle.

RECORD THIS INFORMATION:

MANUFACTURER: _____ MODEL: _____

SERIAL #: _____

| PERFORMANCE DETERMINANTS | YES | NO |
|---|---|---|
| The preparer | | |
| - Disassembled recorder. | ____ | ____ |
| - Used isolation transformer. | ____ | ____ |
| - Adjusted motor speed by listening. | ____ | ____ |
| - Correctly adjusted motor speed. | ____ | ____ |
| - Observed the difference between the turned shock-mount screws and motor speed adjusting screw. | ____ | ____ |
| - Located the take-up supply clutch. | ____ | ____ |
| - Adjusted the take-up clutch for tape equilibrium. | ____ | ____ |
| - Observed if the cassette recorder "C Save" and "C Load" or default saved and loaded. | ____ | ____ |
| - Observed if the tape transportable to another cassette recorder. | ____ | ____ |

# TEST ADMINISTRATOR'S INFORMATION

DUTY Maintaining Computer Equipment

TASK Set tape read/write/verify speed.

ENABLER Adjust drive motor speed on recorder unit.

Test Environment/Station Set Up:

- Workbench with AC power.
- Computer system with good cassette recorder.
- Common tool kit.
- Test tape (Audio).
- Test tape (Computer).
- Isolation transformer.
- Cassette recorder with incorrect drive motor speed.

Supplies, Equipment and References needed before test:

- 2 Spring/belt hooks
- Common tool kit
- Isolation transformer
- Operator's and Technical manual
- Checklist
- Vita-drive (To restore feet, resilience and grip to belts)

Time allowed to perform test:

- 45 minutes
- Test time will stop and restart for belt problems.

Special Instructions for Administering the test:

- Instruct student to Set tape read/write/verify speed so that tape tension runs at an equilibrium between supply and take up spindles.

GUIDE SHEET

DUTY: Maintaining Computer Equipment

---

PERFORMANCE OBJECTIVE #65

TASK: Clean or replace filters.

STANDARD OF PERFORMANCE OF TASK:

Filter must be free of dirt, dust and foreign materials.

SOURCE OF STANDARD:

Writing team of incumbent workers.
How To Maintain and Service Your Small Computer.

CONDITIONS FOR PERFORMANCE OF TASK:

Filters to be cleaned
Replacement filter
Cleaning solution
Tool kit

ENABLING OBJECTIVE:

1. Identify and locate RFI/EMI covers that are part of the cooling system.
2. List serviceability criteria for fan filters.
3. Identify and locate fan, finger guard (grill) retainer tabs and filter frame.

*RESOURCES:

1. EG & G Rotron Specification Sheets.
2. IMC Specification Sheet.
3. Operator's Manual.
4. Technical/Service Manual.
5. Checklist - Filter element removal, cleaning, and replacement.

TEACHING ACTIVITIES:

1. Demonstrate removal of protective grill (finger guard). (*3 & 4)
2. Handout of Manufacturer's RFI/EMI notes and warnings. (*1 & 2)
3. Discuss removal of finger tabs and filter frame.

TEACHING ACTIVITIES: (cont.)

4. Discuss CFM of air and filter serviceability.
5. Discuss cleaning solutions, rinse, and drying of filter elements.
6. Discuss precautions taken prior to installation.
7. Instruct the student to remove, clean, and replace a filter element. (#5)

CRITERION-REFERENCED MEASURE:

The student will remove a filter element and exercise subjective judgement on serviceability for cleaning or need for replacement. Install filter element in filter frame; mount to fan housing and install fan/filter grill. The filter element sits properly and does not obstruct fan wheel.

PERFORMANCE GUIDE:

1. Remove filter cover.
2. Remove old filter and determine if it should be cleaned or replaced:
   A. Replace filter:
      1. Place new filter in position.
      2. Replace filter cover.
   B. Clean filter:
      1. Place filter in cleaning solution.
         A. Warm water and mild detergent.
         B. Mild cleaning solution.
      2. Rinse filter thoroughly until all dust, dirt and foreign matter is removed.
      3. Shake excess solution from filter and let it dry thoroughly.
      4. Place filter in position.
      5. Replace filter cover.

CHECKLIST

DUTY Maintaining Computer Equipment.

TASK Clean or replace filters.

ENABLER Remove, clean and replace a filter element.

STUDENT'S NAME _____ DATE _____

EVALUATOR'S NAME _____ COURSE _____

TIME : STARTED _____ COMPLETED _____

TOTAL _____

DIRECTIONS TO THE EVALUATOR:

1. If filter cannot be cleaned, the student will replace it with a new filter.

| PERFORMANCE DETERMINANTS | YES | NO |
|---|---|---|
| The preparer | | |
| - Powered down system. | ____ | ____ |
| - Removed power plug from AC outlet. | ____ | ____ |
| - Removed and cleaned finger guard grill. | ____ | ____ |
| - Removed and inspected filter element. | ____ | ____ |
| - Washed filter element according to manufacturer's or OEM specifications. | ____ | ____ |
| - Rinsed filter until there was no dust, dirt, grime, ink, or ribbon residue on it. | ____ | ____ |
| - Removed excess rinse. | ____ | ____ |
| - Dried filter. | ____ | ____ |
| - Inspected filter for dimensional stretch. | ____ | ____ |
| - Properly seated filter in filler frame. | ____ | ____ |
| - Seated filter tabs. | ____ | ____ |
| - Reinstalled finger guard. | ____ | ____ |
| - Powered up and checked system. | ____ | ____ |

# TEST ADMINISTRATORS INFORMATION

DUTY Maintaining Computer Equipment

TASK Clean or replace filters.

ENABLER Remove, clean, or replace a filter element.

Test Environment/Station Set Up:

- Workbench station
- Tool kit
- Wash/rinse station with running water and drain
- Solution trays or shallow sink

Supplies, Equipment, and References needed before test:

- Technical reference manual
- Operator's manual
- Cleaning solutions
- Clean wiping cloth
- Tool kit
- Computer equipment with forced air cooling fan.

Time allowed to perform test:

- 30 minutes
- Filter drying time is not in test time.
- Wash/rinse station cleanup time is not in test time.

Special Instructions for Administering the test:

- If filters cannot be cleaned adequately, replace with new filters.

GUIDE SHEET

DUTY: Maintaining Computer Equipment

---

PERFORMANCE OBJECTIVE #66

TASK: Clean outside case/cover.

STANDARD OF PERFORMANCE OF TASK:

Outside case/cover must be free of dirt, grease, grime and dust.

SOURCE OF STANDARD:

Writing team of incumbent workers.
How to Maintain and Service Your Small Computer.

CONDITIONS FOR PERFORMANCE OF TASK:

Case/cover to be cleaned
Cleaning solution
Clean soft cloth

ENABLING OBJECTIVE:

1. Selection of proper cleaning material for plastic, painted metal, and glass.
2. Recognize the need for anti-static treatment of monitor CRT.

*RESOURCES:

1. Stephenson & Cahill <u>How to Maintain and Service Your Small Computer</u> Howard W. Sams & Co., Inc., Indianapolis, IN. 1983.
2. Operator's manuals.
3. Chemical listings of electronic parts catalogs.
4. Computer and business supply catalogs.
5. Technical/service manual.
7. Checklist - Cleaning case.

TEACHING ACTIVITIES:

1. Discuss mild detergents as recommended by computer operator manual. (*2 & 5)
2. Discuss isopropyl versus rubbing alcohol. (*1,2,3 & 5)
3. Discuss the difference between 91 percent and 98 percent isopropyl alcohol. (*1,3 & 5)

TEACHING ACTIVITIES: (cont.)

4. Discuss percent of "Off-the-Shelf" Isopropyl alcohol. (#1,3 & 5)
5. Discuss the advantages of anti-static solutions. (#1)
6. Demonstrate removal of small scratches.
7. Demonstrate cleaning of keyboards and keypads.
8. Instruct student to clean the outside case of a computer terminal including the cover, monitor safety glass, and keypads. (#7)

CRITERION-REFERENCED MEASURE:

The student will clean the outside case of a computer terminal. The outside case is free of dirt, grease, grime and spots. Minor scratches are removed, the CRT safety glass is coated with anti-static treatment as it is cleaned.

PERFORMANCE GUIDE:

1. Obtain case/cover to be cleaned and disconnect power.
2. Determine type of cleaning solution to be used:
   A. Warm water and mild detergent.
   B. Mild liquid cleaning solution:
      1. Alcohol.
      2. Liquid furniture cleaner.
   C. Spray cleaner.
3. Place small amount of cleaner on soft clean cloth.
4. Rub entire case/cover thoroughly until case/cover is clean.
5. Dry case/cover to dry before powering up.

CHECKLIST

DUTY Maintaining Computer Equipment.

TASK Clean outside case/cover.

ENABLER Clean the outside case of a computer terminal including case/cover, monitor screen, and keypads.

STUDENT'S NAME _____ DATE _____

EVALUATOR'S NAME _____ COURSE _____

TIME : STARTED _____ COMPLETED _____

TOTAL _____

DIRECTIONS TO THE EVALUATOR:

Use the checklist to evaluate the use of cleaning agents for different types of materials.

| PERFORMANCE DETERMINANTS | YES | NO |
|---|---|---|
| The preparer | | |
| - Followed power down procedure. | ____ | ____ |
| - Removed cables from all peripheral equipment. | ____ | ____ |
| - Removed remote cables at the computer/terminal. | ____ | ____ |
| - Selected cleaning materials. | ____ | ____ |
| - Used abrasive cleaners to clean the case or cover. | ____ | ____ |
| - Cleaned the outside case or cover of all dirt, grease,grime and stubborn spots. | ____ | ____ |
| - "Rubbed out" minor scratches. | ____ | ____ |
| - Determined the volume of solution for the job. | ____ | ____ |
| - Cleaned the case by rubbing not flooding or flushing. | ____ | ____ |
| - Checked all connectors for cleaning solution. | ____ | ____ |
| - Cleaned the case/terminal using anti-static treatment as indicated by operator's manual. | ____ | ____ |

TEST ADMINISTRATORS' INFORMATION

DUTY Maintaining Computer Equipment

TASK Clean outside case/cover.

ENABLER Clean the outside case of a computer terminal including case/cover, monitor screen, and keypads.

Test Environment/Station Set Up:

- Normal workbench or desk.
- Medium bristle camel-back brush.
- Complete set of cleaning materials.
- Computer/Terminal.

Supplies, Equipment, and References needed before test:

- Operator's manual
- Medium bristle brushes
- Vacuum cleaner
- Fantastik or Formula 409 (for stubborn spots.e.g. Zeron and Diablo)
- Swabs, clean wiping cloths
- Dirty computer/terminal

Time allowed to perform test:

- 30 Minutes
- Time used to remove minor scratches is not counted as test time.

Special Instructions for Administering the test:

- Abrasive powders and liquids will not be used.
- Automotive rubbing compounds will not be used for scratch removal.

GUIDE SHEET

DUTY: Servicing Computer Equipment

---

PERFORMANCE OBJECTIVE #67

TASK: Interpret troubleshooting charts.

STANDARD OF PERFORMANCE OF TASK:

Probable cause and kind of test to run to check problem must be based on symptom or customer complaint.

SOURCE OF STANDARD:

Writing team of incumbent workers.

CONDITIONS FOR PERFORMANCE OF TASK:

Troubleshooting charts
Customer complaint/problem

ENABLING OBJECTIVE:

1. Interpret standard flowchart symbols, and the basic block diagram of the device under test.
2. Use flowchart decision blocks in conjunction with idealized voltages and waveforms explained in sectional narratives.

*RESOURCES:

1. IC Master. United Technical Publications, Inc., Cox Broadcasting Corp, New York, NY.
2. Semi Conductor General Purpose Replacements. Howard W. Sams & Co. Inc., Indianapolis, IN.
3. Technical Service Manual.
4. Operator's Manual.
5. Servicing Data for Computers, Computer Facts, Howard W. Sams & Co., Indianapolis, IN.
6. Transparency of Basic Flowchart Symbols.
7. Visual aid - Block diagram of a computer.
8. Visual aid - Complete flowchart.
9. Checklist - Fault isolate using flowchart checklist.

TEACHING ACTIVITIES:

1. Present transparency of basic flowchart symbols. (*6)

TEACHING ACTIVITIES: (cont.)

2. Discuss the importance of the decision block.
3. Instruct student to make a block diagram of a basic three chip computer.
4. Instruct student to draw a flowchart for a basic three chip computer.
5. Discuss the "Section" isolation flowchart. (#7 & 8)
6. Discuss the "CPU" isolation flowchart.
7. Test students on section isolation flowchart. (#7 & 8)
8. Test students on the CPU flowchart decision blocks.
9. Discuss signal conditioning.
10. Discuss CPU's.
11. Discuss ROM's.
12. Discuss RAM's.
13. Discuss address decoding.
14. Discuss basic keyboards.
15. Discuss video divider chain, video RAM, and video processing.
16. Discuss "SYNC" Generation.
17. Develop flowchart for computer as team project, i.e. Keyboard, Controller (Interface) Card, ROM's, RAM's, Address Decoding, Video. (1,2,3,4 &5)
18. Demonstrate actual symptoms as student flowcharts are tested.
19. Instruct students to fault isolate problems in each major area using their flowchart. (#9)

CRITERION-REFERENCED MEASURE:

The student will validate a symptom, run the indicated diagnostic test, and fault isolate to component level a problem in a malfunctioning computer. Student will use a flowchart in conjunction with idealized test voltages and wave forms.

PERFORMANCE GUIDE:

1. Obtain explanation of problem/symptom or customer complaint.
2. Locate problem/symptom/complaint on trouble shooting chart.
3. Locate probable cause on trouble shooting chart.
4. Determine diagnostic test to check problem or part to be replaced.

MICROCOMPUTER BLOCK DIAGRAM

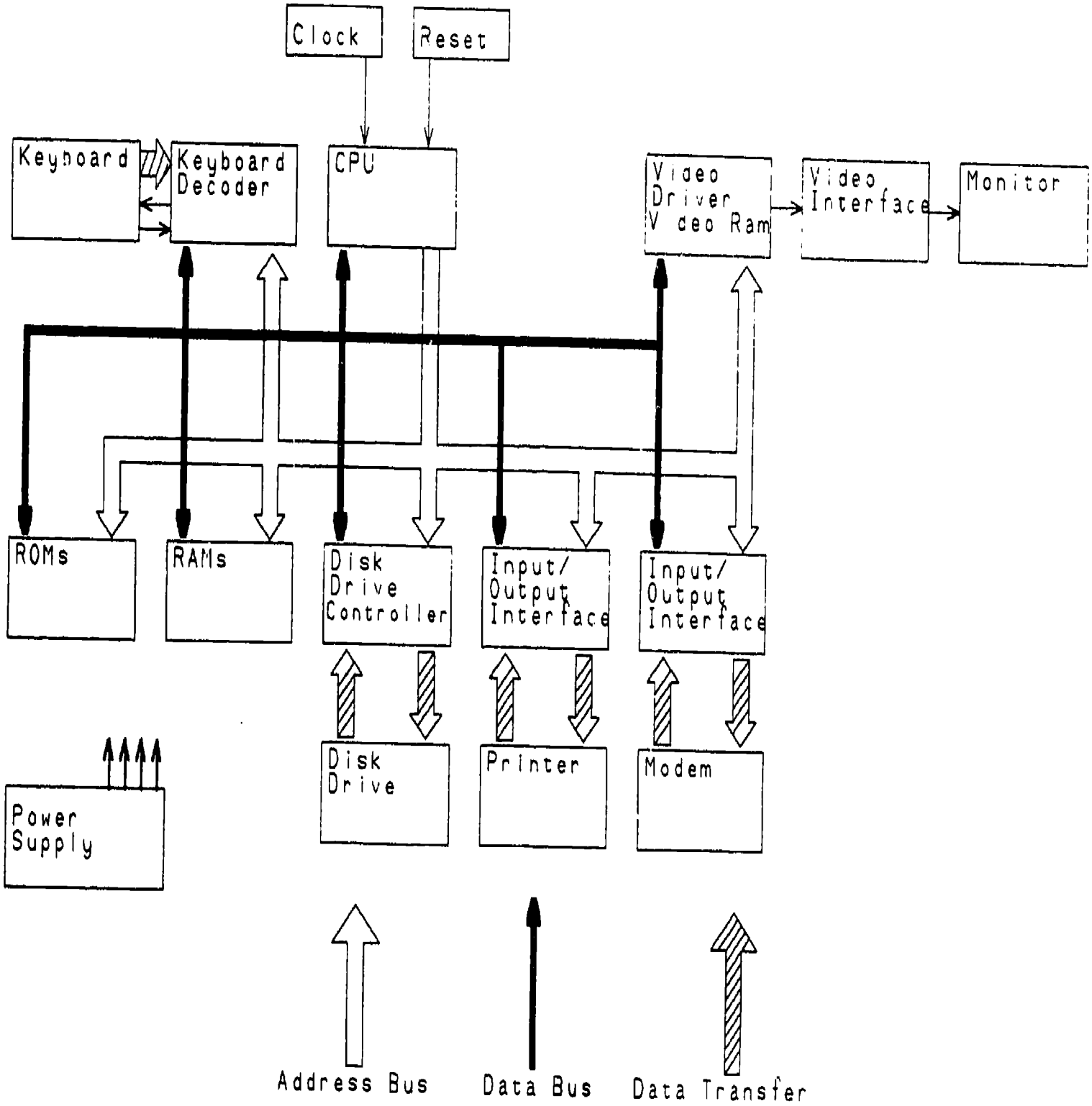

## TYPICAL FLOWCHART SYMBOLS

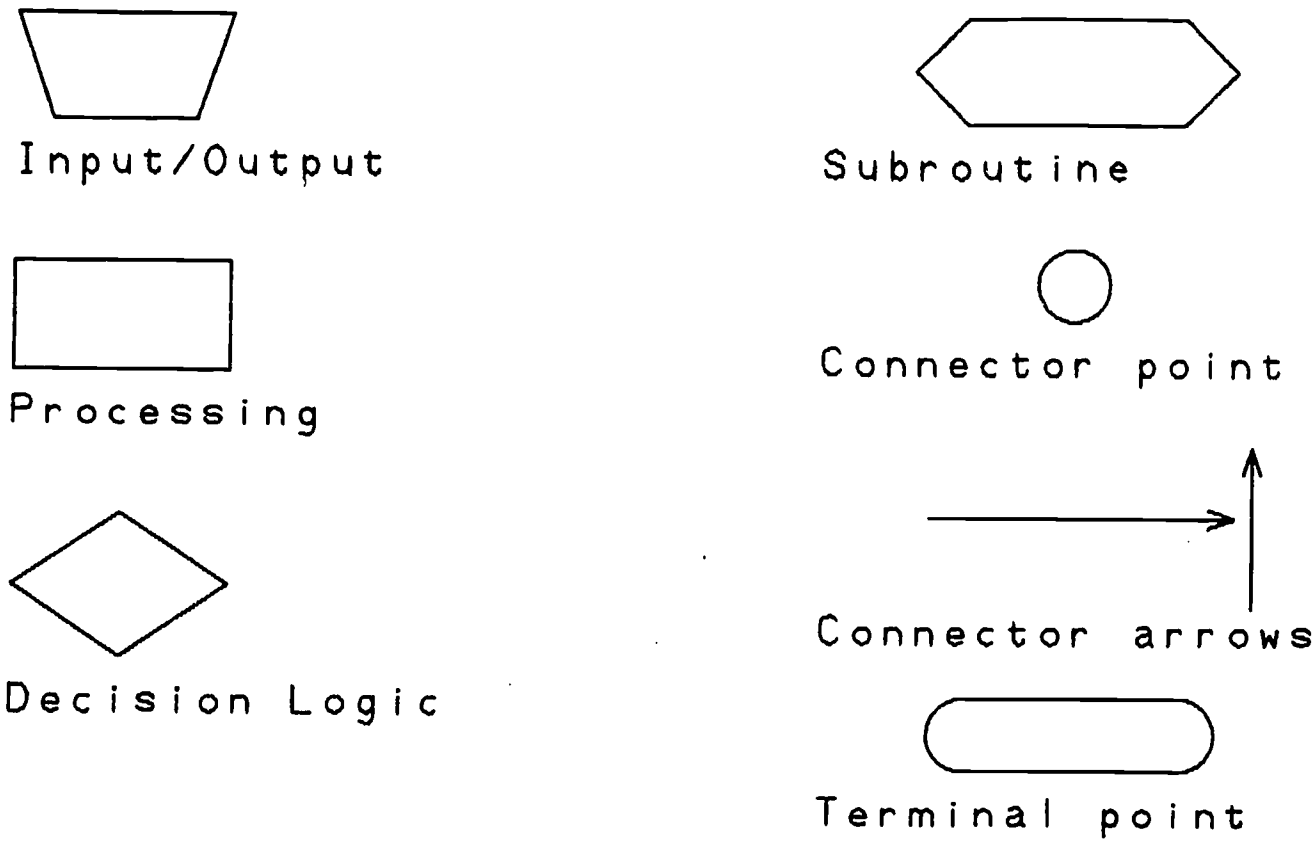


## SAMPLE FLOWCHART

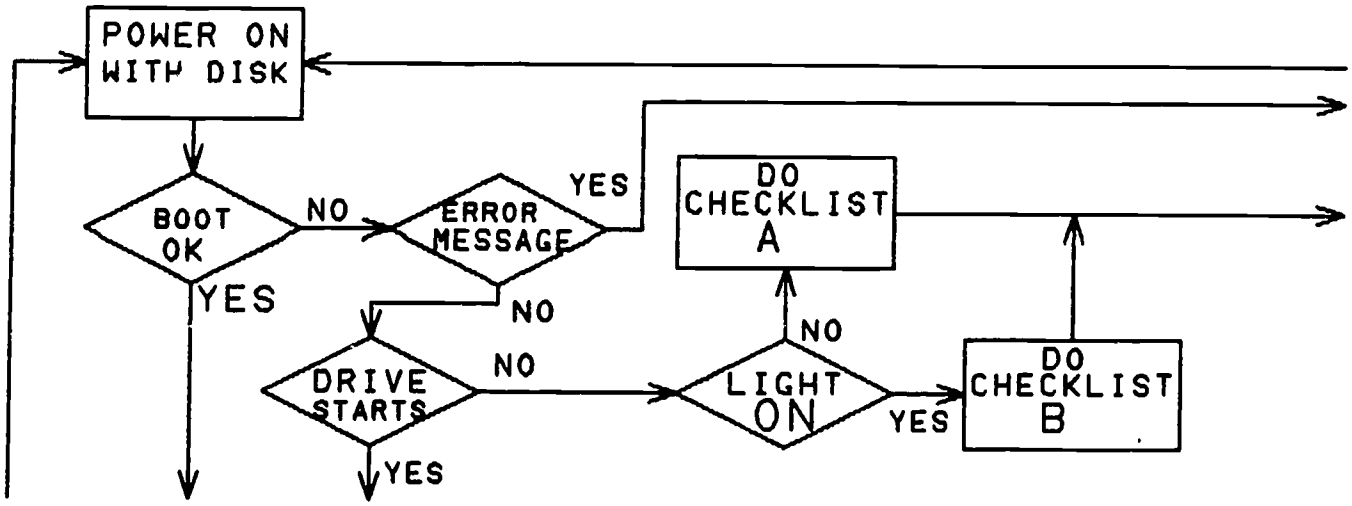

CHECKLIST

DUTY Servicing Computer Equipment

TASK Interpret troubleshooting charts.

ENABLER Use troubleshooting flowcharts to fault isolate problems in a computer.

STUDENT'S NAME _____ DATE _____

EVALUATOR'S NAME _____ COURSE _____

TIME : STARTED _____ COMPLETED _____

TOTAL _____

DIRECTIONS TO THE EVALUATOR:

1. The student may use idealized voltages and waveforms from technical manuals at flowchart decision block "yes" / "no" nodes.

| PERFORMANCE DETERMINANTS | YES | NO |
|---|---|---|
| The preparer | | |
| - Obtained explanation of problem. | ____ | ____ |
| - Verified the problem. | ____ | ____ |
| - Located the suspect section on the flowchart based on symptom. | ____ | ____ |
| - Exercised Cold-Start diagnostics. | ____ | ____ |
| - Selected correct disk diagnostics for sympton and flowchart. | ____ | ____ |
| - Narrowed down probable sections to one faulty section. | ____ | ____ |
| - Located faulty component. | ____ | ____ |
| - Used a systematic procedure. | ____ | ____ |

TEST ADMINISTRATORS INFORMATION

DUTY Servicing Computer Equipment

TASK Interpret trouble shooting charts.

ENABLER Use trouble shooting flowcharts to fault isolate problems in a computer.

Test Environment/Station Set Up:

- Workbench with AC power
- Grounding (static) strap
- Conducting (static) foam mat
- Oscilloscope with 10:1 test probe
- Frequency counter
- Logic probe
- Multimeter
- Malfuntioning but complete computer system.

Supplies, Equipment and References needed before test:

- Technical manual
- Section isolation troubleshooting flowchart
- Common tool kit
- Chip puller/inserter
- Three wire solder pencil and solder
- Anti static strap and foam
- Test equipment
- Procedure sheet

Time allowed to perform test:

- 120% flat rate.
- Test equipment power up 30 minutes before start test.

Special Instructions for Administering the test:

- Remind student of special handling notes and cautions.
- Critique of method and sequence of eliminating alternative faulty sections.

GUIDE SHEET

DUTY: Servicing Computer Equipment

---

PERFORMANCE OBJECTIVE #68

TASK: Interpret chip swapping charts.

STANDARD OF PERFORMANCE OF TASK:

Possible locations and types of defective chips must be based on problem symptoms using chip swapping chart.

SOURCE OF STANDARD:

Writing team of incumbent workers.
Apple Technical Manual.
How to Maintain and Service Your Small Computer.

CONDITIONS FOR PERFORMANCE OF TASK:

Chip swapping charts
Troubleshooting charts
Customer problem

ENABLING OBJECTIVE:

1. Using block diagram level "modes" of specific computers, i.e. basic mode, disk mode, and machine(monitor) mode, relate the modes to problems, and symptoms using a chip swapping chart.

NOTE: Chip swapping charts are normally proprietary and confidential. Use normally restricted to and authorized in franchised service centers only. Your students can develop their own chip swapping charts from these references.

*RESOURCES:

1. DOS Manual.
2. Technical reference manual.
3. Technical service manual
4. Operator's manual.
5. Service Data, Computer Facts (In most cases chip swapping data for RAM's, Chip select IC's and ROM, and good signal tracing waveforms). Howard W. Sams & Co. Inc., Indianapolis, IN.

RESOURCES: (cont.)

6. Chip swapping chart (if available).
7. Checklist - Interpreting chip swap chart.

TEACHING ACTIVITIES:

1. Break class into teams and develop chip swapping charts from Technical Reference handbooks and component removal. *(1,2,3,4,& 5)
2. Demonstrate Tri-State devices with floating and actual output.
3. Assign student an individual assignments to validate sections of their chip swapping chart.
4. Instruct students to validate master chip swapping chart.
5. Instruct student to troubleshoot and repair a computer using a chip swapping chart. *(6 & 7)

CRITERION-REFERENCED MEASURE:

Given a faulty computer, customer problem, and chip swapping charts, the student will troubleshoot the computer by interpreting the problem, determining all symptoms, determining probable cause, and locating symptom on chip swapping chart.

PERFORMANCE GUIDE:

1. Obtain explanation of customer problem.
2. Determine probable cause of problem.
3. Determine symptoms of problems.
4. Locate symptom on chip swapping chart.
5. Identify possible locations and types of defective chips on chip swapping chart.

CHECKLIST

DUTY Servicing Computer Equipment

TASK Interpret chip swapping charts.

ENABLER Troubleshoot and repair a computer using a chip swapping chart.

STUDENT'S NAME _____ DATE _____

EVALUATOR'S NAME _____ COURSE _____

TIME : STARTED _____ COMPLETED _____

TOTAL _____

DIRECTIONS TO THE EVALUATOR:

Possible location and types of defective chips must be based on problem symptoms using a chip swapping chart.

Use below checklist to evaluate the use of a chip swapping chart.

| PERFORMANCE DETERMINANTS | YES | NO |
|---|---|---|
| The preparer | | |
| - Noted complaint (problem). | ____ | ____ |
| - Validated the problem. | ____ | ____ |
| - Determined symptoms in all modes. | ____ | ____ |
| - Located symptom on chip swapping charts. | ____ | ____ |
| - Used systematic method of rejecting alternative suspect sections. | ____ | ____ |
| - Located faulty chip. | ____ | ____ |
| - Exchanged faulty chip for known good chip. | ____ | ____ |
| - Reassembled computer. | ____ | ____ |
| - Tested computer in all modes. | ____ | ____ |

# TEST ADMINISTRATORS INFORMATION

DUTY Servicing Computer Equipment

TASK Interpret chip swapping charts.

ENABLER Toubleshoot and repair a computer using a chip swapping chart

Test Environment/Station Set Up:

- Workbench with AC power
- Standard test equipment
- Static strap and foam
- Chip swapping charts
- Faulty computer

Supplies, Equipment a[illegible]nces needed before test:

- Standard tool kit
- Isolation tra[illegible]
- Three wire sol[illegible] with solder
- IC puller/inserte[illegible]
- Antistatic conducting foam pad and grounding strap
- Chip swapping chart
- Checklist
- Faulty computer

Time allowed to perform test:

- 300% flat rate.
- Time will be stopped to discuss any safety and handling violations.

Special Instructions for Administering the test:

- Check serviceability of grounding strap.
- Discuss manufacturers notes and cautions.
- Possible types and locations of defective chips must be based on problem symptoms using a chip swapping chart.

GUIDE SHEET

DUTY: SERVICING COMPUTER EQUIPMENT

---

PERFORMANCE OBJECTIVE #69

TASK: Interpret schematics.

STANDARD OF PERFORMANCE OF TASK:

Order of operation of circuits, the interrelation of parts, flow of power and logic of construction for a piece of equipment will be used in order to help troubleshoot and correct a problem.

CONDITIONS FOR PERFORMANCE OF TASK:

Equipment to be serviced
Schematics of equipment
Understanding of schematic symbols

ENABLING OBJECTIVES:

1. Identify standard analog and digital electronic symbols.
2. Manipulate time base/synchronizing and voltage controls on a dual-trace oscilloscope.
3. Use a Frequency Counter, Digital VOM and Logic Probe to trace wave forms and voltages as interpreted on schematic.

*RESOURCES:

1. Computer Facts. (Equipment brand name and model number) Howard W. Sams & Co. Inc., Indianapolis, IN.
2. Art Margolis. Troubleshooting and Repairing Personal Computers. Tab Books Inc., Blue Ridge Summit, PA. 1983.
3. Stephenson and Cahill. How to Maintain and Service Your Small Computer. Howard W. Sams and Co., Inc., Indianapolis, IN. 1983.
4. Art Margolis. Computer Technicians Handbook Second Edition. Tab Books Inc., Blue Ridge Summit, PA. 1985.
5. Byron Maguire. Handbook of Computer Maintenance and Toubleshooting. Reston Publishing Company, Inc., Reston, VA. 1973.
6. Art Margolis. Computer User's Guide to Electronics. Tab Books Inc., Blue Ridge Summit, PA. 1985.
7. Manufacturer's operator's manual.

*RESOURCES: (cont.)

8. Manufacturer's DOS manual.
9. Manufacturer's programmer's manual.
10. Hitachi Full Line Condensed Catalog. Semiconductor and IC Sales and Service Division, 1800 Bering Drive, San Jose, CA.
11. Motorola Semiconductor, Phoenix, AZ.
12. National Semiconductor, Santa Clara, CA.
13. Visual Aid - Typical schematic.
14. Checklist - Interpreting a schematic.

TEACHING ACTIVITIES:

1. Present lecture on frequency to voltage converters. (*10,11,12 & 13)
2. Demonstrate usage of frequency to voltage converters.
3. Present lecture on floppy disk read amplifier IC. (*10,11,12 & 13)
4. Demonstrate floppy disk read amplifier IC.
5. Present lecture on sequential and combination logic circuits. (*10,11,12 & 13)
6. Demonstrate the functions of sequential and combination logic circuits.
7. Present lecture on interpreting test point waveforms, ideal frequencies, and ideal voltages as indicated by a schematic. (*1,2,3,4,5,6,7,8 & 9)
8. Demonstrate how to interpret test point waveforms, ideal frequencies, and ideal voltages using a schematic.
9. Instruct student to practice interpreting test point waveforms, ideal frequencies, and ideal voltages using a practice schematic.
10. Present lecture on fault isolation proceedures using a schematic. (*1,2,4,5,7,8,12 & 13)
11. Demonstrate how to fault isolate a faulty circuit and component using a schematic.
12. Instruct student to fault isolate a piece of faulty computer equipment provided using a schematic. (*15)

CRITERION-REFERENCED MEASURE:

Student will use schematics and standard test equipment to fault isolate and repair a piece of faulty computer/terminal equipment, following a logical based on symptom(s) and schematic flow. Student will systematically test interrelated circuits.

PERFORMANCE GUIDE:

1. Obtain equipment to be serviced and an explanation of customer's complaint.

PERFORMANCE GUIDE: (cont.)

2. Use schematic to locate parts or circuits that are interrelated and could affect each other's operation.
3. Monitor circuit using schematic and test equipment.
4. Isolate to faulty component.

# TYPICAL POWER SUPPLY SCHEMATICS

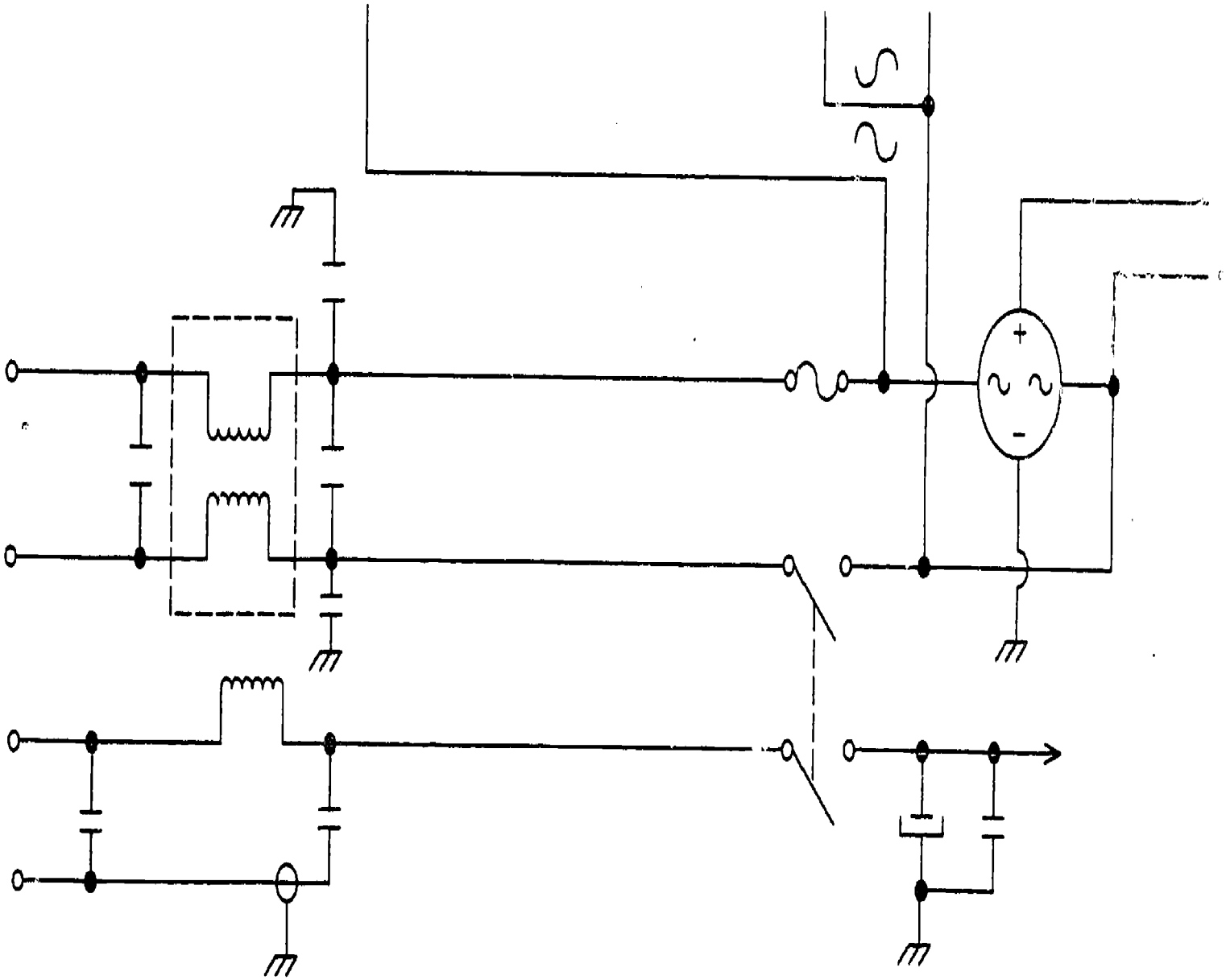


353

354

CHECKLIST

DUTY Servicing Computer Equipment

TASK Interpret schematics.

ENABLER Use a Frequency Counter, Digital VOM, and Logic Probe to trace waveforms and voltages as indicated on schematic.

STUDENT'S NAME _____ DATE _____

EVALUATOR'S NAME _____ COURSE _____

TIME : STARTED _____ COMPLETED _____

TOTAL _____

DIRECTIONS TO THE EVALUATOR:

Use the following checklist to evaluate student performance when interpreting schematics.

| PERFORMANCE DETERMINANTS | YES | NO |
|---|---|---|
| The preparer | | |
| - Noted and validated the problem. | ____ | ____ |
| - Listed all symptoms contributing to the problem. | ____ | ____ |
| - Selected proper technical/reference manuals or Computer Facts for the assigned computer/terminal equipment. | ____ | ____ |
| - Calibrated test equipment. | ____ | ____ |
| - Used schematic to list alternate sections (circuits) that could cause or contribute to the problem. | ____ | ____ |
| - Monitored circuit for ideal waveforms. | ____ | ____ |
| - Tested circuit for ideal voltage and frequency. | ____ | ____ |
| - Located faulty component. | ____ | ____ |
| - Replaced faulty component. | ____ | ____ |
| - Powered up equipment and performed cold start check and/or diagnostics. | ____ | ____ |
| - Performed system check. | ____ | ____ |

TEST ADMINISTRATORS INFORMATION

DUTY Servicing Computer Equipment

TASK Interpret schematics.

ENABLER Use a Frequency Counter, Digital VOM, and Logic Probe to trace waveforms and voltages as indicated on schematic.

Test Environment/Station Set Up:

- Workbench with power or 4 wheel service cart.
- Faulty computer/terminal system.
- Common tool kit.
- Oscilloscope with 10/1 probe.
- Frequency counter.
- Logic probe.
- Digital voltmeter.
- Special tools available.

Supplies, Equipment and References needed before test:

- Jumper cables (e.g. encoder/keyboard - to - motherboard, power supply to motherboard).
- Special tools (e.g. solder vac, IC puller, IC inserter, shorting strap, and conducting foam).
- Operator's manual, technical/reference/service manual and/or Computer Facts servicing data.

Special Instructions for Administering the test:

- Start with item 9 of the teaching activities.
- Use the checklist to evaluate the student.
- Student understands that problem must be 100% resolved to pass this competency.

GUIDE SHEET

DUTY: Servicing Computer Equipment

---

PERFORMANCE OBJECTIVE #70

TASK: Interpret manufacturing upgrade.

STANDARD OF PERFORMANCE OF TASK:

Upgrade information must determine status of upgrade, including manufacturing change, problem in field, and safety changes.

CONDITIONS FOR PERFORMANCE OF TASK:

Equipment to be serviced
Service manual
Manufacturing upgrade information

ENABLING OBJECTIVES:

1. Define "problem resolved" on aftermarket upgrade.
2. Answer "problem(s) not resolved" and customer upgrade questions on effect on equipment operation, application, packages, files and related peripherals.
3. Determine status of manufacturing upgrade.

*RESOURCES:

1. Manufacturer's operator's manual.
2. Manufacturer's DOS manual.
3. Technical/Service manual.
4. Stephenson and Cahill. How to Maintain and Service Your Small Computer. Howard W. Sams & Co., Inc., Indianaplois, IN. 1983.
5. Bryon Maguire. Handbook of Computer Maintenance and Troubleshooting. Reston Publishing Company, Inc., Reston, VA. 1973.
6. Art Margolis. Computer User's Guide to Electronics. Tab Books Inc., Blue Ridge Summit, PA. 1985.
7. Encyclopedia of Electronics. Tab Professional and Reference Books, Tab Books Inc., Blue Ridge Summit, PA. 1985.
8. Checklist - Interpreting manufacturing upgrade.

TEACHING ACTIVITIES:

1. Present lecture on upgrade procedures. (*1,2,3,5 & 6)

TEACHING ACTIVITIES: (cont.)

2. Discuss examples of upgrade procedure to include:
   A. Problem(s) resolved.
   B. Problems not resolved (under engineering study).
   C. Parts accountability.
   D. Labor.
   E. Reports.
   F. Changes to dash-number, serial number, or model number. (*3,4,5 & 6)
3. Discuss related customer services, i.e. compatibility of existing archive files, working files, new commands/procedures and operation of equipment after upgrade. (*1,2,3,4 & 5)
4. Demonstrate posting of service/technical manual. (*1,2,3,4,5 & 6)
5. Discuss resolving problem in field type upgrade using service/reference/technical manual, upgrade information and warranty/service responsibility. (*1,2,3,4,5 & 6)
6. Demonstrate proper step-by-step parts check off. (*3,5 & 6)
7. Demonstrate checking of indicated (purposed) changes to equipment operation as a result of the upgrade. (*1,4 & 10)
8. Demonstrate procedure required to update applications packages and archive files. (*1,4 & 10)
9. Assign student a field-upgrade job order.
10. Brief students of upgrade requirements using upgrade information and student checklist. (*2 and student checklist.)
11. Instruct student to complete assigned upgrade.

CRITERION-REFERENCED MEASURE:

The student will install an upgrade to include substituting/adding parts, posting manuals, checking out upgrade and educating customer to effect of upgrade.

PERFORMANCE GUIDE:

1. Obtain equipment to upgrade.
2. Read service manual section dealing with upgrade information sent by manufacturer.
3. Determine changes in equipment and the effects the changes will have on the operation of the equipment.
4. Refer to upgrade information when trouble shooting parts interrelated to the upgraded part itself.

CHECKLIST

DUTY Servicing Computer Equipment

TASK Interpret manufacturing upgrade

ENABLER Determine status of upgrade.

STUDENT'S NAME _____ DATE _____

EVALUATOR'S NAME _____ COURSE _____

TIME : STARTED _____ COMPLETED _____

TOTAL _____

DIRECTIONS TO THE EVALUATOR:

Use the following checklist to evaluate interpreting manufacturing upgrade. Time allowed is as stated in upgrade order + 50%.

| PERFORMANCE DETERMINANTS | YES | NO |
|---|---|---|
| The preparer | | |
| - Read applicable section of service/ technical manual. | ____ | ____ |
| - Read upgrade information. | ____ | ____ |
| - Listed changes to equipment in sequential order. | ____ | ____ |
| - Posted required changes to service manual. | ____ | ____ |
| - Wrote required paperwork. | ____ | ____ |
| - Followed upgrade installation procedures. | ____ | ____ |
| - Installed upgrade resolve problems to extent specified in upgrade order. | ____ | ____ |
| - Explained operational effect on equipment. | ____ | ____ |
| - Explained correct tie in of upgrade technical documentation and previous technical documentation in troubleshooting upgraded section. | ____ | ____ |
| - Performed cold start/diagnostic tests. | ____ | ____ |
| - Upgrade accomplished without causing malfunction in related or adjacent circuits. | ____ | ____ |

# TEST ADMINISTRATORS INFORMATION

DUTY Servicing Computer Equipment.

TASK Interpret manufacturing upgrade.

ENABLER Determine status of upgrade.

Test Environment/Station Set Up:

- Workbench with AC power.
- Common tool kit.
- Instructors written procedure sheet or students procedure sheet ok'd by instructor.
- Computer/terminal.

Supplies, Equipment and References needed before test:

- Upgrade order/authorization.
- Operators manual.
- Service/Technical/Reference manuals.
- Test equipment (testing of upgrade parts).

Time allowed to perform test:

- 150% of upgrade reimbursement/credit/installation time.
- Time spent physically inventorying parts is not part of test.
- Time spent checking serviceability of upgrade parts is not part of test.

Special Instructions for Administering the test:

- Problem resolved type upgrade (not upward compatibility) has the advantage of before installation and after installation comparisons.
- Use the checklist for student evaluation.
- Student explains the complete procedure using his/your procedure sheet prior to installing upgrade.

GUIDE SHEET

DUTY: Service Computer Equipment

---

PERFORMANCE OBJECTIVE #71

TASK: Remove and install cover.

STANDARD OF PERFORMANCE OF TASK:

Allow access to internal components of unit.

SOURCE OF STANDARD:

Writing team of incumbent workers.
Troubleshooting And Repairing Personel Computers.

CONDITIONS FOR PERFORMANCE OF TASK:

Equipment unit
Service manual
Tool kit

ENABLING OBJECTIVES:

1. Identify types of plugs, sockets, connectors and jacks used on computer equipment.
2. Identify the difference in socket and connector in spacing and keyway coding.
3. Follow equipment/system cable/harness running sheets.
4. Identify fasteners in button-up procedures.
5. Obtain access to internal components of computer equipment.

*RESOURCES:

1. Art Margolis. Troubleshooting and Repairing Persona Computers. Tab Books Inc., Blue Ridge Summit, PA. 1983.
2. Stephenson and Cahill. How to Maintain and Service Your Small Computer. Howard W. Sams & Co., Inc., Indianapolis IN. 1983.
3. Art Margolis. Computer Technicians Handbook, Second Edition. Tab Books Inc., Blue Ridge Summit, PA. 1985.
4. Byron Maguire. Handbook of Computer Maintenance and Troubleshooting. Reston Publishing Company, Inc., Reston VA. 1973.
5. Manufacturer's operator's manual.

*RESOURCES: (cont.)

6. Technical/Service Manual.
7. Computer Facts, Howard W. Sams & Co., Inc., Indianapolis IN.
8. Visual aid - Removal and installation of cover.
9. Checklist - Removal and installation of cover.

TEACHING ACTIVITIES:

1. Present lecture on cover removal and installation procedure. (*1,2,3,4,5,6 & 7)
2. Discuss and show Students edge card socket type connectors, edgecard PCB pin connectors, headers and subminature connectors. *Physical components and current catalogs i.e. Jameco, Jade, DigiKey, VanSickle, Newark and Mouser.
3. Discuss and show students CPC-family circular connectors, din connectors, PC terminal strips, and Mate-N-Lock panel type connectors. *Physical components and catalogs i.e. Jameco, Jade, DigiKey.
4. Demonstrate use of wiring ducts, speed fasteners, SpirobondR, P-clips (burndy), and cradle clips.
5. Demonstrate removal and installation of strain relief bushings, fast-on terminals and general cable ties. (strain relief pliers, terminal pliers and tie tightening tool.)
6. Demonstrate removal of terminal cover on largest available system. (*1,2,3,4,5,6 & 7)
7. Instruct student to diagram the position of cables, connectors and their orientation. (*9)
8. Instruct student to identify EMI/RFI shields.
9. Demonstrate "button-up" procedure.
10. Demonstrate cold start (initial) tests sequence.
11. Discuss external connections for AC power, standard peripherals, modem eliminators and emulators.
12. Instruct students to remove and install the cover of a piece of computer equipment. (*9)

CRITERION-REFERENCED MEASURE:

Student will remove a terminal cover to allow access to internal components. Cables/harness must be reconnected, tied and laced in tunnel. Terminal was buttoned-up, reconnected to system and tested.

PERFORMANCE GUIDE:

1. Turn power off.
2. Disconnect power cable and other external peripheral cables.
3. Locate cover retaining screws/nuts holding cover to housing
4. Remove retaining screws/nuts holding cover to housing.

PERFORMANCE GUIDE: (cont.)

5. Remove cover partially and disconnect wires or cables connected to both cover and housing.
6. Mark or diagram position wires or cables.
7. Reconnect wires and cables to the cover and housing.
8. Place cover back on the housing and replace retaining screws.
9. Reconnect power cable and external peripheral cables.

# REMOVING CASE/COVER RETAINING SCREWS

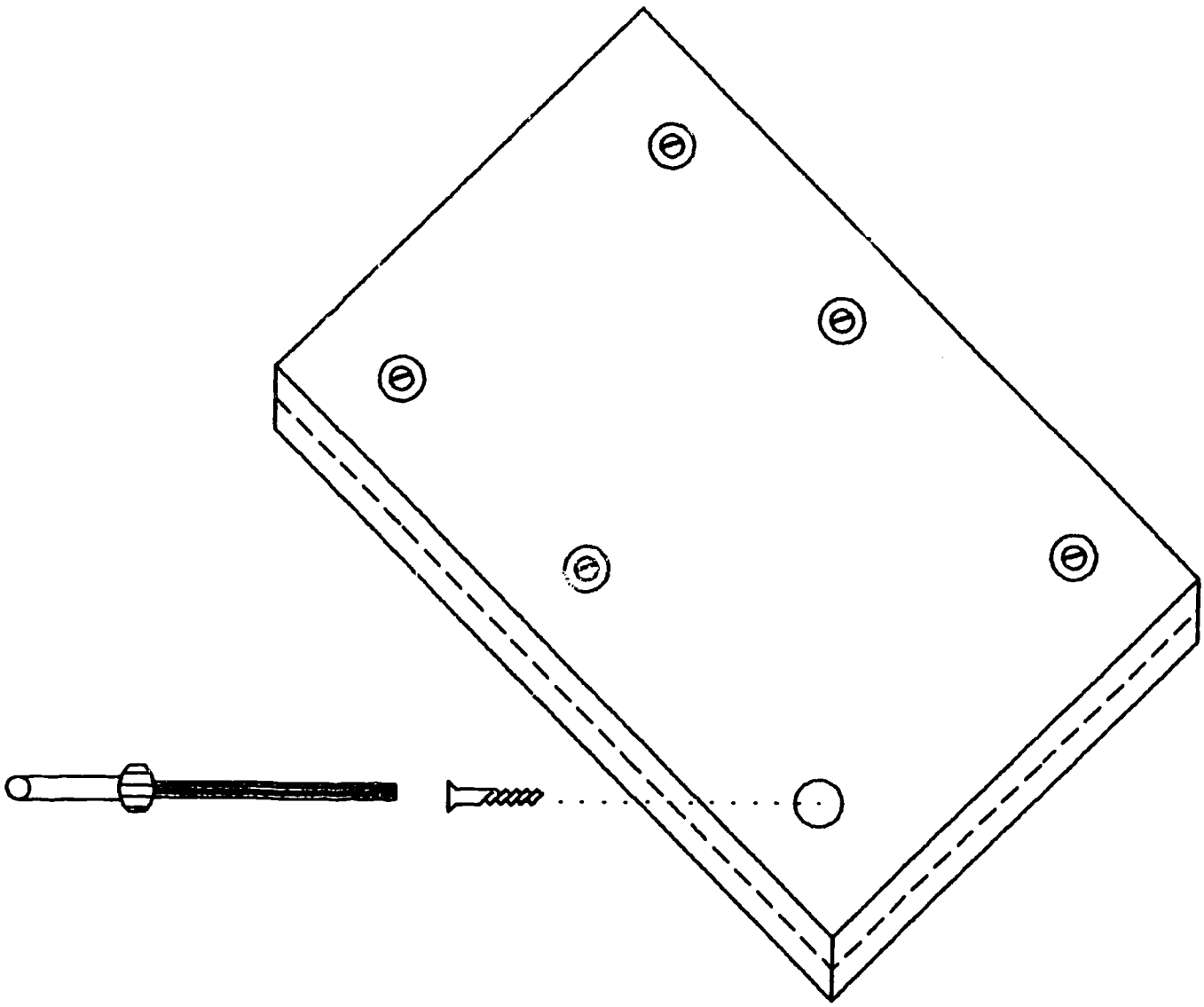

Carefully remove all retaining screws.

# REMOVING CASE/COVER

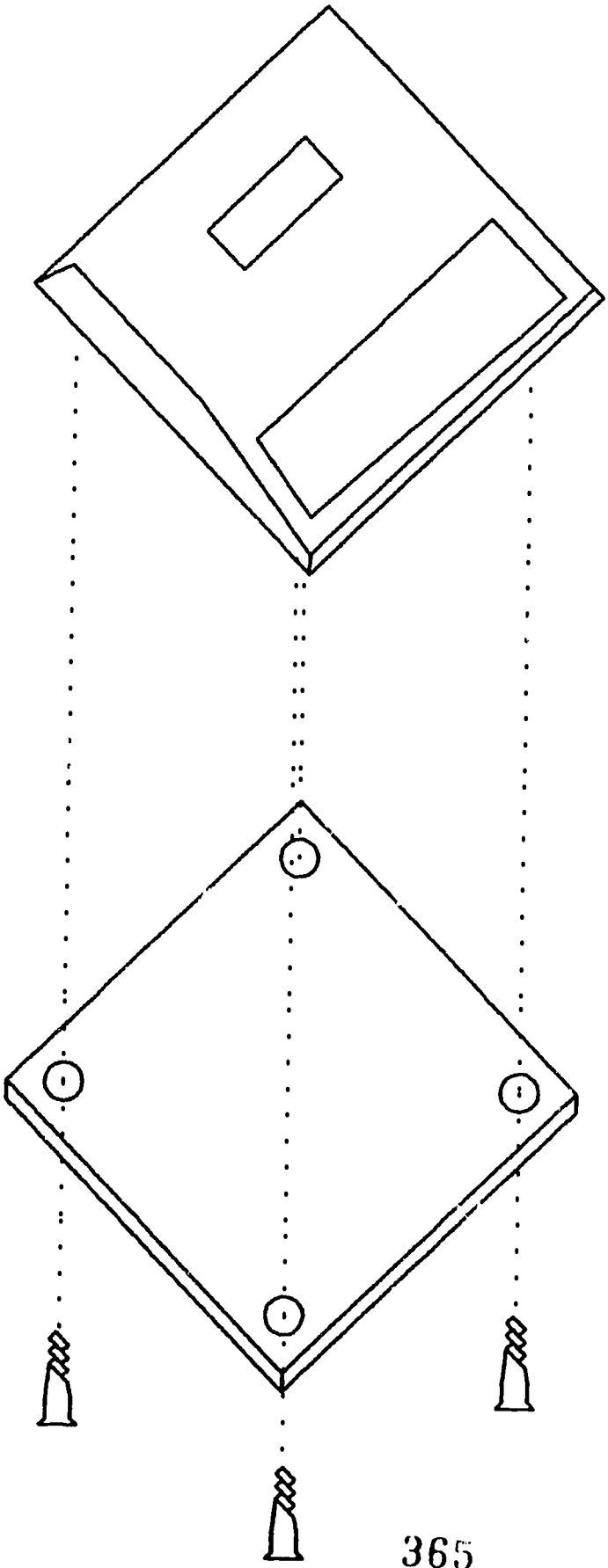

CHECKLIST

DUTY Servicing Computer Equipment

TASK Remove and install cover.

ENABLER Obtain access to internal components of unit.

STUDENT'S NAME _____ DATE _____

EVALUATOR'S NAME _____ COURSE _____

TIME : STARTED _____ COMPLETED _____

TOTAL _____

DIRECTIONS TO THE EVALUATOR:

Use the following checklist to evaluate student performance when removing and installing cover.

| PERFORMANCE DETERMINANTS | YES | NO |
|---|---|---|
| The preparer | | |
| - Followed power down procedure. | ____ | ____ |
| - Read service/technical reference manuals and list cautions. | ____ | ____ |
| - Observe manufacturer's cautions. | ____ | ____ |
| - Drew a wiring diagram. | ____ | ____ |
| - Adequately and correctly drew wiring diagram. | ____ | ____ |
| - Made wiring diagram understandable for instructor. | ____ | ____ |
| - Followed cover removal procedure. | ____ | ____ |
| - Properly replaced, connected, routed and laced cables/harnesses. | ____ | ____ |
| - Properly replaced EMI/RFI shields. | ____ | ____ |
| - Followed button-up procedure. | ____ | ____ |
| - Properly connected peripherals. | ____ | ____ |
| - Readied system to pass cold start/ diagnostics tests. | ____ | ____ |

# TEST ADMINISTRATORS INFORMATION

DUTY Servicing Computer Equipment

TASK Remove and install cover.

ENABLER Obtain access to the internal components of the unit.

Test Environment/Station Set Up:

- Station set up varies with size and configuration of equipment.
- Workbench with AC power for desktop computer/terminal equipment.
- Four wheel two shelf cart for rack mounted and floor console equipment.
- Common tool kit.
- Cable service kit.

Supplies, Equipment and References needed before test:

- Paper and pencil
- Cable ties
- Strain relief pliers
- Felt tip color markers or wire tab identifiers
- Crimping tool set

Time allowed to perform test:

- Establish chart of acceptable time based on your equipment and your time + 50%.
- Enter time on checklist under "Directions to the evaluator".

Special Instructions for Administering the test:

- Question student on release of lock mechanisms on non-friction lock connectors prior to starting test.
- Use the checklist to evaluate student
- Personally check placement and fastenings of all EMI/RFI shields.
- Personally check all added aftermarket grounding wires and external to peripheral cable grounding wires.

GUIDE SHEET

DUTY: Servicing Computer Equipment

---

PERFORMANCE OBJECTIVE #72

TASK: Install keyboard.

STANDARD OF PERFORMANCE OF TASK:

Keyboard must be functional and must pass diagnostic test without error.

SOURCE OF STANDARD:

Writing team of incumbent workers.
How to Maintain and Service Your Small Computer.

CONDITIONS FOR PERFORMANCE OF TASK:

Central processing unit or
Keyboard housing if separate
Adjustable wrench
Screwdriver
Nutdrivers
Service manual

ENABLING OBJECTIVES:

1. Identification of keyboard-to-motherboard (logic) board connector and correct pin orientation.
2. Determine keyboard connector signal description and "pin-out".
3. Understand "piggy-back" encoder mounting techniques

*RESOURCES:


1. Computer Facts. Howard W. Sams & Co., Inc., Indianapolis IN.
2. Stephenson and Cahill. How to Maintain and Service Your Small Computer. Howard W. Sams & Co., Inc., Indianapolis IN. 1983.
3. Art Margolis. Computer Technicians Handbook, Second Edition. Tab Books Inc., Blue Ridge Summit, PA. 1985.
4. MOS/LSI Databook, National Semiconductor, 2900 Semiconductor Drive, Santa Clara, CA 95051.
5. TTL Databook, National Semiconductor, 2900 Semiconductor Drive, Santa Clara, CA 95051.

*RESOURCES: (cont.)

6. Motorola Microprocessors Data Manual, Motorola Inc., MOS Integrated Circuits Group, Microprocessor Division, Austin, TX
7. Component Data Catalog, Literature Department, Intel Corporation, 3065 Bowers Avenue, Santa Clara, CA 95051
8. Manufacturer's operator's manual.
9. Manufacturer's DOS manual.
10. Visual aid - Installing a keyboard.
11. Checklist - Installing a keyboard.

TEACHING ACTIVITIES:

1. Present lecture on different types of keyboards and keyboard connections. (*1,2,3 4,5,6,8 & 9)
2. Discuss examples of polled keyboards. (*1,4,5 & 6)
3. Discuss ASC II keyboards and code assignment chart. (*4)
4. Discuss modified ASC II keyboard. (*1,6)
5. Discuss MM5740/5745/5746.4
6. Discuss KY 2002 Standard ASC II/Reverse ASC II.
7. Discuss quadrature key matrix to include shift, control, unshift and shift/control. (*1,8 & 9)
8. Discuss NCS 8279. (*[illegible]
9. Review NE 555/556 timers.
10. Present lecture on soldering and desoldering techniques. (*2, 7 & 10)
11. Demonstrate desoldering/soldering of solder/ribbon cable inter connection cables. (*1,8 & 9)
12. Instruct student to practice soldering and desoldering techniques.
13. Demonstrate removal of standard plug type keyboard connector. (*1)
14. Present lecture on keyboard removal and replacement procedures. (*1,2,3,8 & 9)
15. Demonstrate keyboard removal and replacement procedures.
16. Instruct student to write chart of selected keyboard outputs, e.g. control, reset, l.h. shift/r.h. shift, repeat, debounce mask data (and memory addresses if applicable).
17. Instruct student to remove and replace a computer system's keyboard. (*11)

CRITERION-REFERENCED MEASURE:

Student will replace a computer/terminal keyboard. Student followed proper procedure removing old keyboard and installing replacement key board. Coldstart or diagnostics test OK.

PERFORMANCE GUIDE:

1. Disconnect power source and keyboard connector.
2. Remove cover.
3. Remove retaining screws/nuts holding keyboard to housing.
4. Lift keyboard free.
5. Place new keyboard in place.
6. Replace retaining screws/nuts.
7. Replace cover.
8. Reconnect power source and keyboard connector.
9. Run diagnostic test to check.

# TYPICAL KEYBOARD ARRANGEMENT

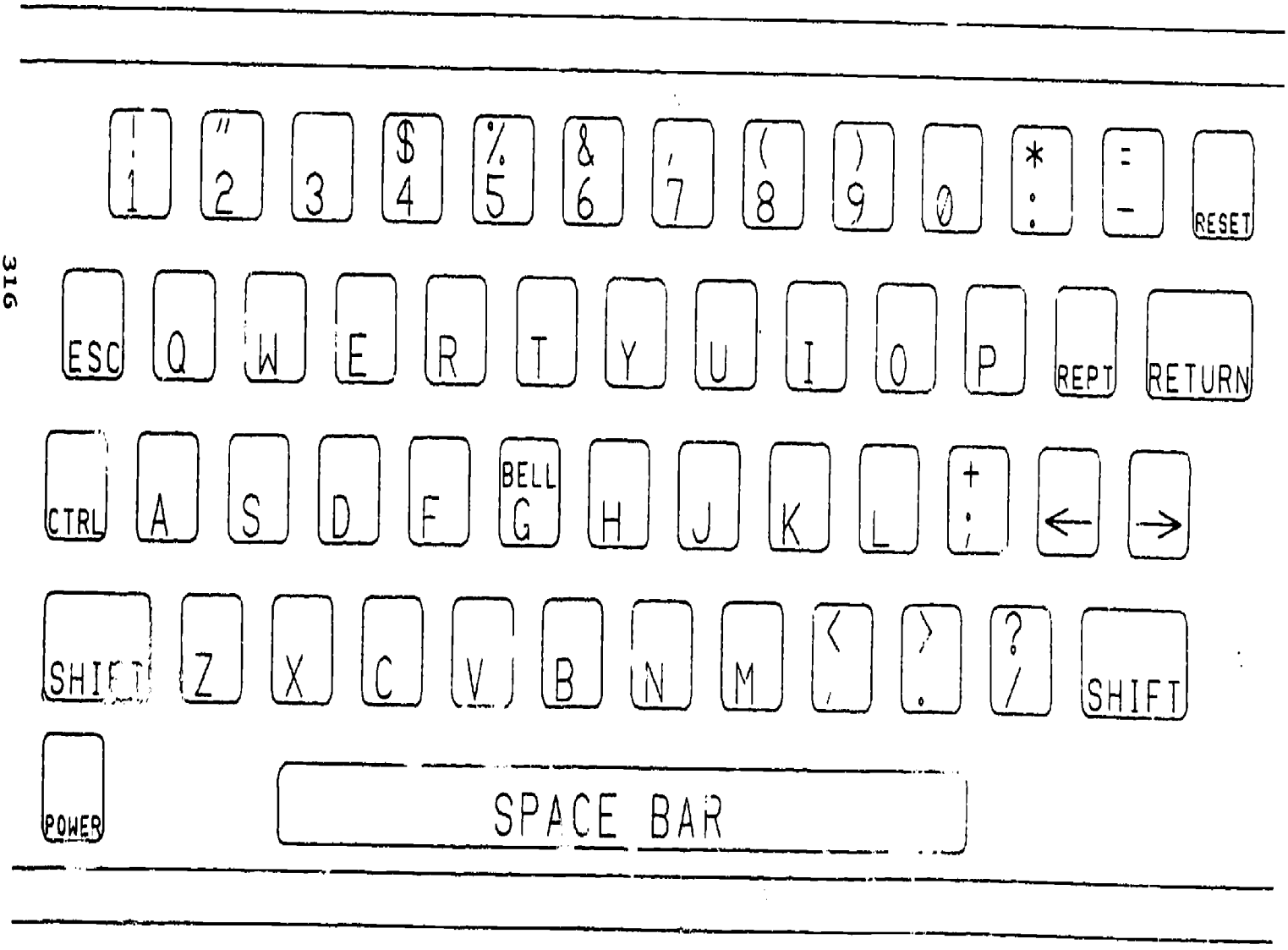

CHECKLIST

DUTY Servicing Computer Equipment

TASK Install keyboard.

ENABLER Remove and replace keyboard.

STUDENT'S NAME _____ DATE _____

EVALUATOR'S NAME _____ COURSE _____

TIME : STARTED _____ COMPLETED _____

TOTAL _____

DIRECTIONS TO THE EVALUATOR:

Use the following checklist to evaluate student performance when installing keyboard.

| PERFORMANCE DETERMINANTS | YES | NO |
|---|---|---|
| The preparer | | |
| - Powered down system. | ____ | ____ |
| - Followed the correct procedure for removing cover/case. | ____ | ____ |
| - Removed keyboard connector. | ____ | ____ |
| - Followed correct procedure disconnecting audio, encoder, piggyback connectors or flying leads. (Strike out steps not applicable) | ____ | ____ |
| - Identified and removed keyboard mounting hardware. | ____ | ____ |
| - Installed old aluminum foil on replacement keyboards which use aluminum foil shielding. | ____ | ____ |
| - Reconnected flying leads. | ____ | ____ |
| - Corrected button-up. | ____ | ____ |
| - Readied system to pass cold start or diagnostics. | ____ | ____ |
| - Operated printer. | ____ | ____ |

# TEST ADMINISTRATORS INFORMATION

DUTY Servicing Computer Equipment

TASK Install keyboard.

ENABLER Remove and replace keyboard.

Test Environment/Station Set Up:

- Workbench with AC power
- Common tool kit.
- Service manual
- Vacuum cleaner/MiniVac
- Replacement keyboard

Supplies, Equipment and References needed before test:

- Double sided tape
- Aluminum foil (heavy duty)
- Replacement keyboard
- Common tool kit
- Cleaning material to include medium bristle brush.
- Computer/terminal with keyboard

Time allowed to perform test:

- 20 minutes
- Student reads Service/Reference/Technical Manual prior to starting test.

Special Instructions for Administering the test:

- Discuss location of keyway or pin 1 location on keyboard and motherboard with student prior to starting test.
- Discuss aftermarket keyboard to printer card jumper(s) if present.
- On equipment using solder on ribbon interconnection cables, traces will delaminate after a few tests. Making keyboard, motherboard/logic board useless.
- Use the checklist to evaluate student.
- If foil is used between keyboard & motherboard, stop test and check for shorts then restart test.

GUIDE SHEET

DUTY: Servicing Computer Equipment

---

PERFORMANCE OBJECTIVE #73

TASK: Install motherboard.

STANDARD OF PERFORMANCE OF TASK:

Motherboard must be functional and must pass diagnostic test without error

SOURCE OF STANDARD:

Writing team of incumbent workers.

CONDITIONS FOR PERFORMANCE OF TASK:

Central processing unit
Integrated circuit puller
Adjustable wrench
Screwdriver
Needle nose pliers
Service manual
Nutdrivers

ENABLING OBJECTIVES:

1. Identification and location of keyboard connector, audio connectors, speaker connector, video connector, dedicated peripheral slots and general purpose connectors/slots.

*RESOURCES:

1. Computer Facts. Howard W. Sams & Co., Inc., Indianapolis,
2. Manufacturer's operator's manual.
3. Technical/Service manual.
4. Art Margolis. Computer User's Guide to Electronics. Tab Books Inc., Blue Ridge Summit, PA. 1985.
5. Art Margolis. Computer Technicians Handbook. Second Edition. Tab Books Inc., Blue Ridge Summit, PA. 1985.
6. Visual aid - Motherboard connector.
7. Checklist - Installing motherboard.

TEACHING ACTIVITIES:

1. Present lecture on motherboards and connectors.

TEACHING ACTIVITIES: (cont.)

2. Discuss cartridge type slots.
3. Discuss DIN type connectors.
4. Discuss on board speaker connectors. (*1,2)
5. Discuss user I/O slots/connectors. (*1,2,3,4,5)
6. Discuss slot-cards connected to motherboard. (*2)
7. Discuss dedicated/default slot connectors. (*1,2,3,4)
8. Present lecture on installing and removing motherboard.
9. Demonstrate stand alone PCB [illegible] /clip system. (*2,4,6)
10. Demonstrate installation/removal of motherboard using nylon spacer and screw/bolt hardware fastners. (*2,4,6)
11. Demonstrate removal/installation of motherboard on computer system using through the base snap-in supports/spacers; stacking spacers and screw/nut and bolt fastners. (*2,4,6)
12. Test student on identification, location, and purpose of slots, connectors, plugs, and flying leads.
13. Instruct students to remove and install a motherboard.

CRITERION-REFERENCED MEASURE:

Student will remove and replace a motherboard and conduct a system performance test. Motherboard must pass system performance check without error.

PERFORMANCE GUIDE:

1. Power off: disconnect power source and keyboard connector.
2. Remove cover.
   CAUTION: Static electricity can cause damage to intergrated circuit chips. Be sure to discharge static from body and avoid high static areas.
3. Disconnect motherboard power supply plug.
4. Disconnect speaker connector.
5. Remove motherboard retaining screws/nuts.
6. Unhook motherboard from any support flanges.
7. Lift motherboard up and out.
8. Place new motherboard back on support flanges.
9. Replace motherboard retaining screws/nuts.
10. Plug in speaker connector.
11. Plug in motherboard power supply.
12. Run diagnostic test.
13. Replace cover.

TYPICAL MOTHERBOARD ARRANGEMENT

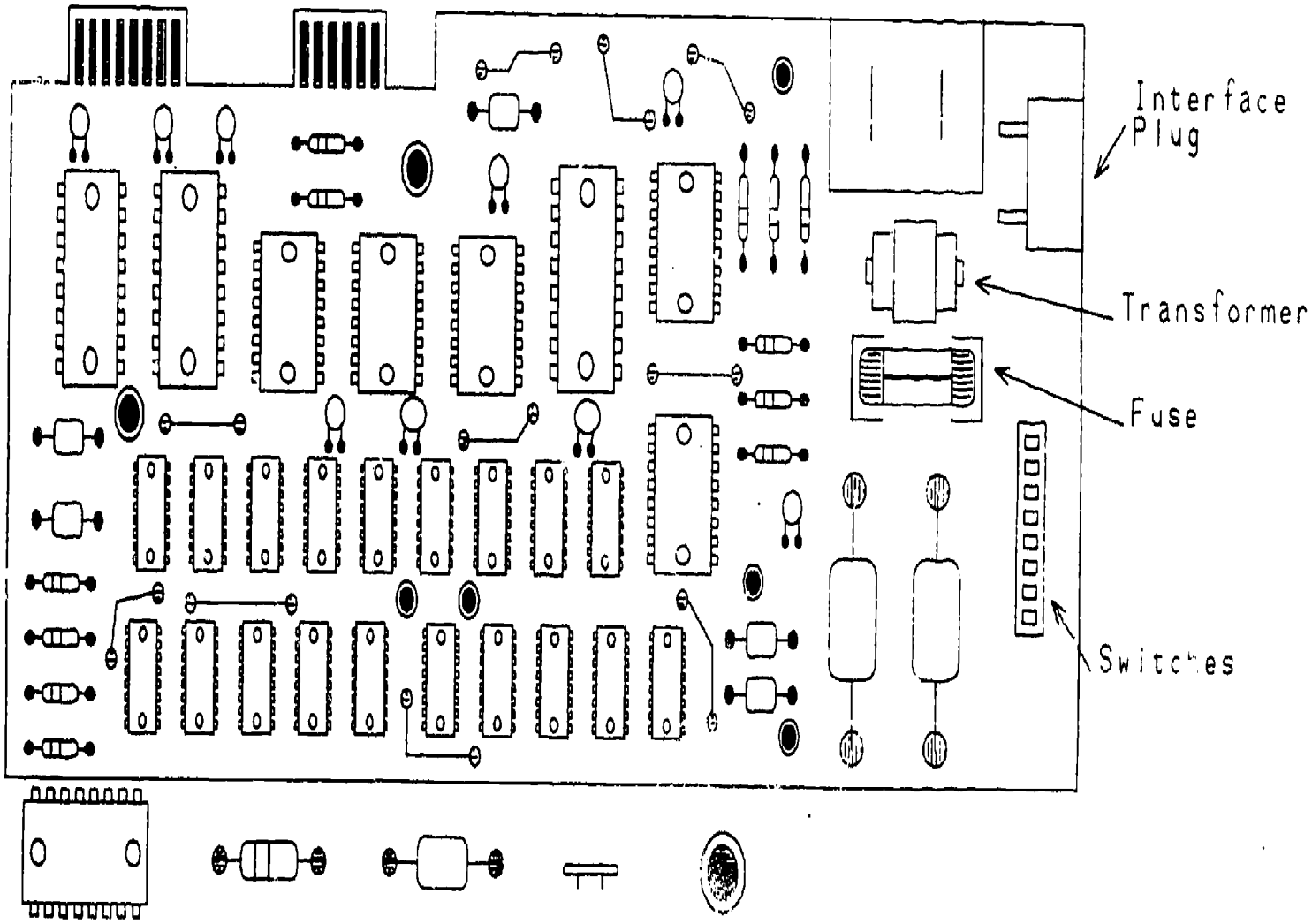




Integrated Circuit Chip  Resistor  Diode  Capacitor  Transistor

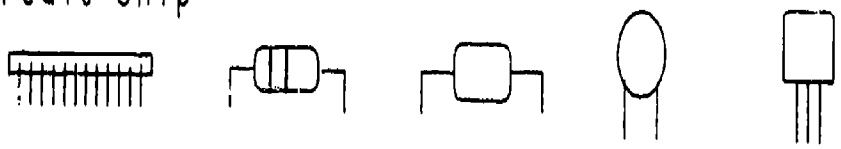

CHECKLIST

DUTY Servicing Computer Equipment

TASK Install motherboard.

ENABLER Locate and identify computer/terminal connectors/slots.

STUDENT'S NAME _____ DATE _____

EVALUATOR'S NAME _____ COURSE _____

TIME : STARTED _____ COMPLETED _____

TOTAL _____

DIRECTIONS TO THE EVALUATOR:

Use checklist to evaluate student installing motherboard

| PERFORMANCE DETERMINANTS | YES | NO |
|---|---|---|
| The preparer | | |
| - Followed power down procedures. | ____ | ____ |
| - Followed manual procedures for access to motherboard. | ____ | ____ |
| - Wrote a list identifying all mother board connectors. | ____ | ____ |
| - Followed anti-static practices. | ____ | ____ |
| - Disconnected power supply primary harness from motherboard. | ____ | ____ |
| - Removed peripheral cards. | ____ | ____ |
| - Removed peripheral connectors. | ____ | ____ |
| - Disconnect on-board connectors, e.g. power-on indicator lamp, printer fixes. | ____ | ____ |
| - Properly removed and stored mother-board fastners - Different length screws and spacers. | ____ | ____ |
| - Replaced motherboard according to manual procedures. | ____ | ____ |
| - Properly connected on-board connectors. | ____ | ____ |
| - Connected flying leads. | ____ | ____ |

PERFORMANCE DETERMINANTS: (cont.)

| | YES | NO |
|---|---|---|
| - Made correct special card connections, i.e. Language card-to-motherboard RAM or RAM expansion-to-motherboard. | ____ | ____ |
| - Corrected peripheral connectors. | ____ | ____ |
| - Connected power supply. | ____ | ____ |
| - Readied system to pass cold start/ diagnostics test. | ____ | ____ |
| - Replaced the cover. | ____ | ____ |

# TEST ADMINISTRATORS INFORMATION

DUTY Servicing Computer Equipment

TASK Install motherboard.

ENABLER Locate and identify computer/terminal connectors/slots.

Test Environment/Station Set Up:

- Workbench with power
- Computer/terminal with peripherals
- Replacement motherboard
- Anti-static set
- Common tool kit
- Nutdrivers

Supplies, Equipment and References needed before test:

- Antistatic grounding strap
- Conductive foam
* IC inserter & IC extractor
- Service/Technical/Reference Manuals
- Pencil and paper
- Felt tip markers

Time allowed to perform test:

- 20 minutes for removal & installation

Special Instructions for Administering the test:

* If necessary to remove static ICs from replacement motherboard to connect user I/F cards, test student on procedure prior to starting evaluation on checklist.
- Use the checklist to evaluate the student.
- Critique student using checklist

GUIDE SHEET

DUTY: Servicing Computer Equipment

---

PERFORMANCE OBJECTIVE #74

TASK: Install power supply.

STANDARD OF PERFORMANCE OF TASK:

Machine must power up.

SOURCE OF STANDARD:

Writing team of incumbent workers.
Troubleshooting and Repairing Personal Computers.

CONDITIONS FOR PERFORMANCE OF TASK:

| | |
|---|---|
| Unit being serviced | Screwdrivers |
| Nutdrivers | Socket set |
| Pliers | Service manual |
| Dies | |

ENABLING OBJECTIVES:

1. Identify different types of power supply units used in computer equipment.
2. Remove access cover and identify power supply retaining connectors.
3. Determine the location of power supply mounting, slides and fasteners.
4. Understand the purpose/function of a power supply.
5. Remove and replace a power supply.

*RESOURCES:

1. Art Margolis. Troubleshooting & Repairing Personal Computers. Tab Book Inc., Blue Ridge Summit, PA, 1983.
2. Stephenson & Cahill. How To Maintain And Service Your Small Computer. Howard W. Sams & Co., Inc., Indianapolis, IN, 1983.
3. Art Margolis. Computer Technician's Handbook, Second Edition. Tab Book Inc., Blue Ridge Summit, PA, 1985.
4. Art Margolis. Computer User's Guide to Electronics. Tab Book Inc., Blue Ridge Summit, PA, 1985.
5. Manufacturer's Operator's Manual.
6. Manufacturer's Service Manual.

*RESOURCES: (cont.)

7. Voltage Regulator Handbook National. National Semiconductor Corporation, 2900 Semiconductor Drive, Santa Clara, CA 95051
8. Linear Databook National Semiconductor. National Semiconductor Corporation, 2900 Semiconductor Drive, Santa Clara, CA 95051
9. Linear and Interface Intergrated Circuits. Motorola Semiconductor Products, Inc., Box 20312, Phoenix, AZ.
10. Visual Aid-Block diagram of power supply.
11. Checklist-Installing power supply.

TEACHING ACTIVITIES:

1. Present lecture on computer input voltages. (*1, 2, 3, 4, 5, 6, 7, 8, & 9)
2. Discuss manufacturer's voltage cautions.
3. Discuss power plugs and pin-outs.
4. Discuss voltage select cards.
5. Show students the location of power plugs and pin-outs.
6. Present lecture on types of computer equipment power supplies and their functions. (*1, 2, 3, 4, 5 & 6)
7. Conduct class discussion on voltage conversion.
8. Demonstrate voltage conversion by drawing a block diagram of a power supply for a given piece of computer equipment. (*10)
9. Assign student a piece of computer equipment and instruct them to determine its voltage requirements and draw a block diagram of its power supply.
10. Present lecture on power supply removal procedures. (*1, 2, 3, 4, 5 & 6)
11. Demonstrate power supply removal procedure.
12. Instruct student to install a power supply unit. (*11).

CRITERION-REFERENCED MEASURE:

Student will remove and replace a power supply according to manufacturer's specifications. The machine will power-up when the power switch is turned on.

PERFORMANCE GUIDE:

1. Turn off power
2. Disconnect power cable and other external peripheral cables.
3. Remove cover.
4. Loosen retaining screws/nuts which secure power supply to housing.
   CAUTION: Do not try to remove screws.
5. Lift up edge of power supply and slide it forward until rear mounting screws clear.

PERFORMANCE GUIDE: (cont.)

6. Lift power supply out.
7. Disconnect power supply connector.
8. Clip wire tie holding cable (if there is one).
9. Place new wire tie on cable (if needed).
10. Plug in power supply cable connector.
11. Place power supply back on mountings, sliding the rear in first.
12. Tighten all screw/nuts.
    CAUTION: Do not force screws or strippage may occur.
13. Check for correct voltage.
14. Replace cover and power up.

BLOCK DIAGRAM:
TYPICAL COMPUTER POWER SUPPLY

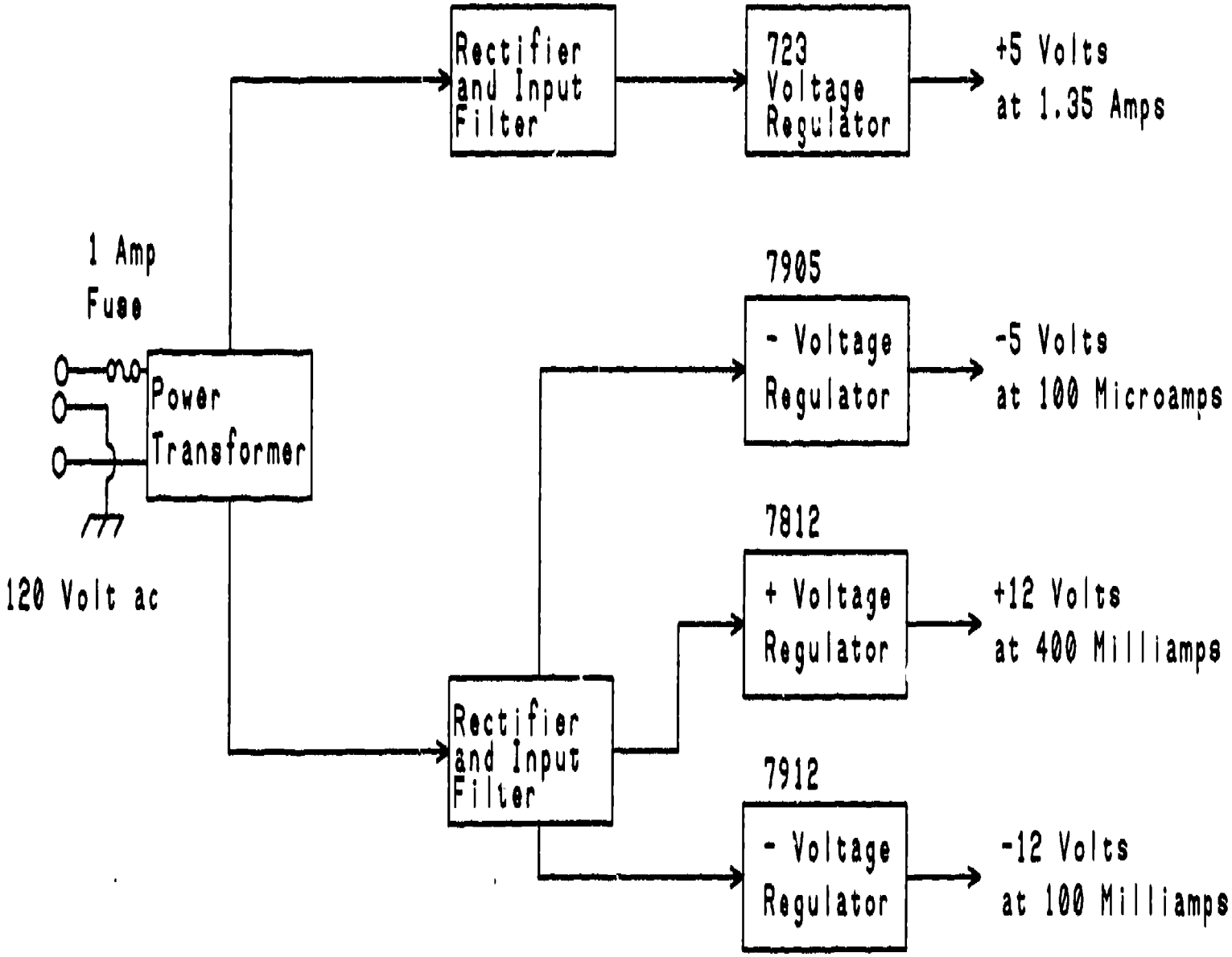

CHECKLIST

DUTY Servicing Computer Equipment

TASK Install power supply.

ENABLER Remove and replace power supply.

STUDENT'S NAME _____ DATE _____

EVALUATOR'S NAME _____ COURSE _____

TIME : STARTED _____ COMPLETED _____

TOTAL _____

DIRECTIONS TO THE EVALUATOR:

Use the following checklist to evaluate student performance while removing and replacing power supply.

| PERFORMANCE DETERMINANTS | YES | NO |
|---|---|---|
| The preparer | | |
| - Followed power down procedure. | ____ | ____ |
| - Disconnected power supply cable. | ____ | ____ |
| - Disconnected distribution and peripheral cables. | ____ | ____ |
| - Followed manual procedure for removing cover(s). | ____ | ____ |
| - Followed manufacturers procedural steps for removing/loosening and mounting hardware. | ____ | ____ |
| - Followed manufacturers installation procedure. | ____ | ____ |
| - Measured voltages where required. | ____ | ____ |
| - Properly connected cables/harnesses. | ____ | ____ |
| - Routed cables as on original equipment. | ____ | ____ |
| - Used new wire ties as on original equipment. | ____ | ____ |
| - Made sure mounting hardware/fasteners met specifications. | ____ | ____ |
| - Made sure ideal test point/plug voltages were correct. | ____ | ____ |

PERFORMANCE DETERMINANTS: (cont.)

| | YES | NO |
|---|---|---|
| - Powered up system. | ____ | ____ |
| - Readied system to pass diagnostics tests. | ____ | ____ |
| - Made sure button-up procedure was correct. | ____ | ____ |

# TEST ADMINISTRATORS INFORMATION

DUTY Servicing Computer Equipment

TASK Install power supply.

ENABLER Remove and replace power supply.

Test Environment/Station Set Up:

- Workbench with AC power for desktop computer/terminal equipment.
- Four wheel cart with shelves for floor unit.
- Functional replacement power supply.
- Computer/terminal equipment.
- Technical manuals.
- Digital volt/ohm meter.
- Vacuum cleaner/mini vac.

Supplies, Equipment and References needed before test:

- Cable ties
- Common tool kit
- Diagnostic disk (if DUT does not have cold start test)
- Technical/reference/service manual

Time allowed to perform test:

- 20 minutes for actual removal and installation.

Special Instructions for Administering the Test:

- Use the checklist to evaluate the student.
- If on board regulators are used, discuss check/adjustment procedure with student.
- Critique checklist with student.

GUIDE SHEET

DUTY: Servicing Computer Equipment

---

PERFORMANCE OBJECTIVE #75

TASK: Install analog board.

STANDARD OF PERFORMANCE OF TASK:

Analog board must be functional and must pass a diagnostic test without error

SOURCE OF STANDARD:

Writing team of incumbent workers.

CONDITIONS FOR PERFORMANCE OF TASK:

Unit being serviced
Screwdrivers
Nutdrivers
Needle nose pliers
Service manual

ENABLING OBJECTIVES:

1. Identify analog board, motor control plug, (controller) card connector plug, and read/write connector plug.
2. Demonstrate competency in use of oscilloscope in monitoring ramped and stepped wave forms.
3. Remove and replace an analog board.

*RESOURCES:

1. Manufacturer's Operator's Manual.
2. Manufacturer's DOS Manual.
3. Manufacturer's Service Manual.
4. Computer Facts. Howard W. Sams & Co., Indianapolis, IN.
5. Motorola Linear and Interface Circuits. Motorola Semiconductor, Box 20912, Phoenix, AZ.
6. Linear Databook National Semiconductor. National Semiconductor Corporation, 2900 Semiconductor Drive, Santa Clara, CA.
7. Checklist - Installing an analog board.

TEACHING ACTIVITIES:

1. Present lecture on the major components and connectors on an analog board. (#1, 2, 3, 4, 5 & 6)

TEACHING ACTIVITIES: (cont.)

2. Conduct class discussion on the function/purpose of the analog board.
3. Show the student an analog board, its location and its major components.
4. Present a lecture on the removal and installation of an analog board. (#1, 2, & 3)
5. Demonstrate removal and installation procedures for an analog board.
6. Demonstrate the use of a diagnostic disk and idealized analog board test waveforms.
7. Conduct class discussion on methods of retaining analog boards.
8. Instruct student to remove and install an analog board. (#7)

CRITERION-REFERENCED MEASURE:

The student will locate, disconnect, remove and install an analog board in a piece of computer equipment. Analog board must be functional and pass a diagnostic test free of error.

PERFORMANCE GUIDE:

1. Turn off power and remove external cables.
2. Remove cover.
3. Remove disk drive assembly shield.
4. Disconnect disk ribbon cable.
5. Disconnect read/write head cable.
6. Remove mounting screws holding analog board to housing.
7. Remove analog board from retaining hooks.
8. Disconnect motor plug.
9. Connect motor plug making sure pins align with holes.
10. Place analog board on retaining hooks.
11. Replace mounting screws.
12. Replace read/write head cable.
13. Replace disk assembly shield.
14. Replace cover.
15. Run diagnostic test to check for errors.

CHECKLIST

DUTY Servicing Computer Equipment

TASK install analog board.

ENABLER Remove and replace analog board.

STUDENT'S NAME _____ DATE _____

EVALUATOR'S NAME _____ COURSE _____

TIME : STARTED _____ COMPLETED _____

TOTAL _____

DIRECTIONS TO THE EVALUATOR:

Use the following checklist to evaluate student performance while removing and replacing analog board.

Note 1 At least two third party vendors fasten the analog board with cable ties--no screws are used.

Note 2 Third party vendors may use cable ties on the 20 conductor ribbon cable, and male connector at the analog board jack.

| PERFORMANCE DETERMINANTS | YES | NO |
|---|---|---|
| The preparer | | |
| - Powered down and removed external cables. | ____ | ____ |
| - Removed computer/terminal cover (if self contained). | ____ | ____ |
| - Removed shield from disk drive assembly. | ____ | ____ |
| - Removed disk ribbon cable (if self contained). | ____ | ____ |
| - Remove mounting screws holding analog board to housing(OEM) or used small diagonal pliers to cut cable tie fastener. | ____ | ____ |
| - Removed analog board from hooks. | ____ | ____ |
| - Disconnect motor control board plug. | ____ | ____ |
| - Connect plug from motor control board prior to seating analog board on hooks. | ____ | ____ |

PERFORMANCE DETERMINANTS: (cont.)

| | YES | NO |
|---|---|---|
| - Replaced analog board on base hooks. | ____ | ____ |
| - Replaced mounting screws or cable ties. | ____ | ____ |
| - Replaced read/write head cable socket. | ____ | ____ |
| - Replaced shield. | ____ | ____ |
| - Replaced cover. | ____ | ____ |
| - Made sure diagnostics test were ok. | ____ | ____ |
| - Was critiqued on this procedure. | ____ | ____ |

# TEST ADMINISTRATORS INFORMATION

DUTY Servicing Computer Equipment

TASK Install analog board.

ENABLER Remove and replace analog board.

Test Environment/Station Set Up:

- Workbench with AC power.
- Common tool kit.
- Computer system with two disk drives.
- Spare analog card.
- Diagnostics diskette.
- Oscilloscope with 10:1 probe.

Supplies, Equipment and References needed before test:

- Cable ties
- Spare(exercise) disk
- Procedure sheet
- Technical/reference/service manual

Time allowed to perform test:

- 20 minutes

Special Instructions for Administering the Test:

- Read note on checksheet to student prior to starting test.
- Use the checklist to evaluate the student
- If the student must adjust R28 and/or R33 on analog board, stop test time; restart time when adjustment is correct.
- Critique student using checksheet.

GUIDE SHEET

DUTY: Servicing Computer Equipment

---

PERFORMANCE OBJECTIVE #76

TASK: Install disk drive assembly.

STANDARD OF PERFORMANCE OF TASK:

Disk drive assembly must be functional and must pass diagnostic test free of error.

SOURCE OF STANDARD:

Writing team of incumbent workers.
How to Maintain and Service Your Small Computer.

CONDITIONS FOR PERFORMANCE OF TASK:

Pencil
Screwdrivers
Nutdrivers
Spring clip pliers
Disk drive unit
Needle nose pliers
Service manual

ENABLING OBJECTIVES:

1. Locate and identify components of front panel assembly.
2. Locate and identify disk drive base, analog/control board and motor drive board.

*RESOURCES:

1. Stephenson & Cahill. How to Maintain And Service Your Small Computer. Howard W. Sams & Co., Inc., Indianapolis, IN, 1983.
2. Manufacturer's DOS Manual.
3. Manufacturer's Operator's Manual.
4. Manufacturer's Service Manual.
5. Reinhold, Hermann. The 1541 Repair and Maintenance Handbook. Abacus Software, Grand Rapids, MI, 1985.
6. Computer Facts. Howard W. Sams & Co., Inc., Indianapolis, IN.
7. Worksheet - Disk drive component identification.
8. Visual Aid - Typical disk drive assembly.
9. Checklist - Installing a disk drive assembly.

TEACHING ACTIVITIES:

1. Present lecture on different types of disk drives. (#1, 2, 3 & 4)
2. Conduct a class discussion on external/stand alone disk drive units.
3. Conduct a class discussion on internal/on-board drive units.
4. Show student each type of disk drive unit.
5. Present lecture on disk drive assembly components. (#1, 2, 3, 4, 5 & 6)
6. Identify and discuss disk drive components' functions.
7. Instruct student to complete disk drive component identification worksheet. (#8)

CRITERION-REFERENCED MEASURE:

Student removes and installs a disk drive assembly. The computer/terminal passes diagnostic test without I/O error.

PERFORMANCE GUIDE:

1. Turn off power, disconnect power cord, and external cables.
2. Remove cover.
3. Remove analog card.
4. Draw pencil line on chassis along front and side of disk assembly bezel.
5. Loosen retaining screws securing disk assembly.
6. Remove disk assembly by sliding forward until it clears retaining clips.
7. Lift disk assembly from chassis.
8. Replace disk assembly, sliding assembly under retaining clip.
9. Align front of assembly with pencil line on chassis.
10. Tighten retaining screws.
11. Replace analog card.
12. Run diagnostic test to check for errors.
13. Replace cover.

# DISK DRIVE ASSEMBLY

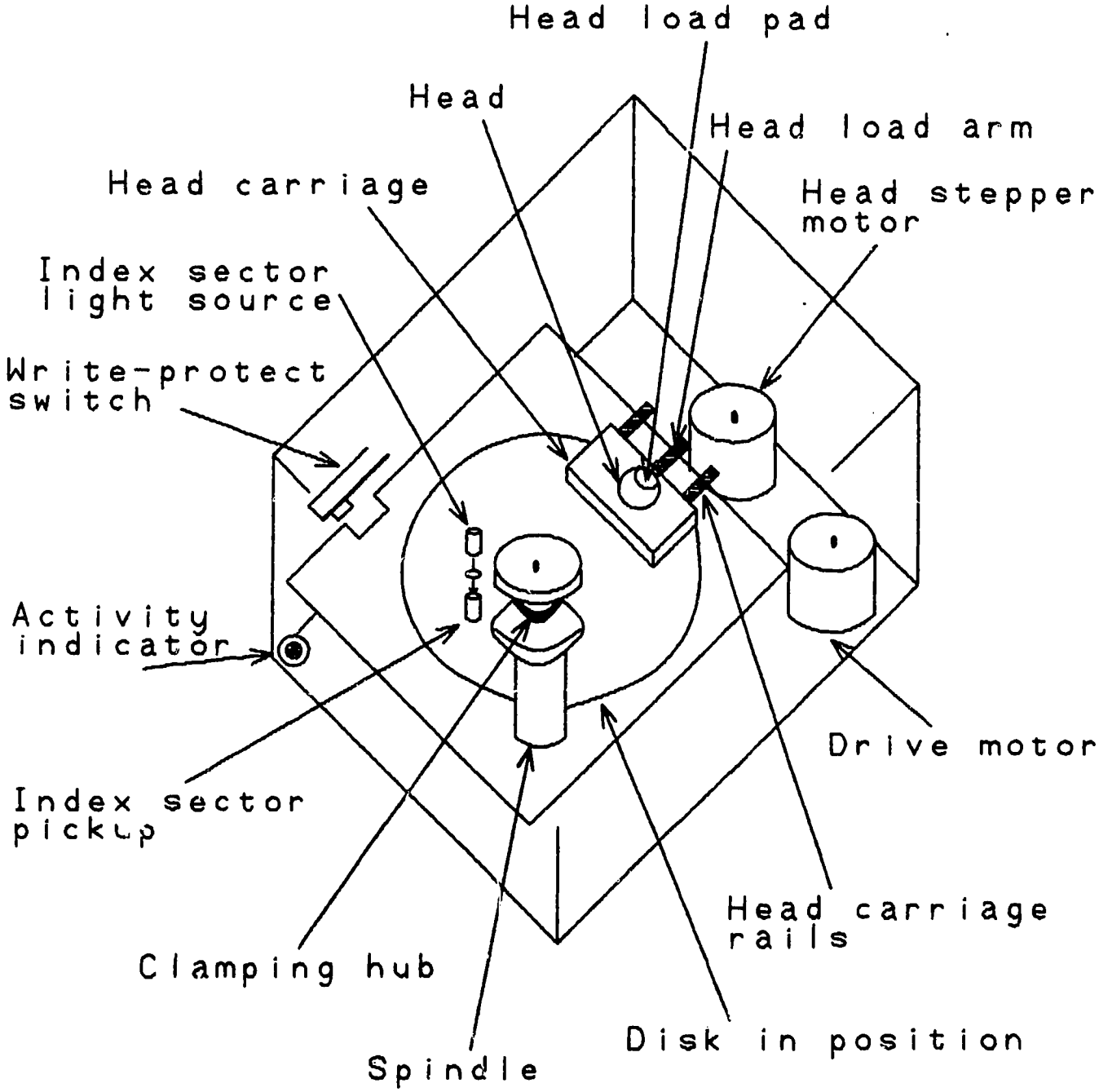

CHECKLIST

DUTY Servicing Computer Equipment

TASK Install disk drive assembly.

ENABLER Remove and replace disk drive.

STUDENT'S NAME _____ DATE _____

EVALUATOR'S NAME _____ COURSE _____

TIME : STARTED _____ COMPLETED _____

TOTAL _____

DIRECTIONS TO THE EVALUATOR:

Use the following checklist to evaluate student performance while installing a disk drive assembly.
Note: On some newer disk drive assemblies, drive unit to front bezel physical location is dictated by mounting hardware. However, location of hardware/ pop-rivets on write protect microswitch or opto-coupler is adjustable.

| PERFORMANCE DETERMINANTS | YES | NO |
|---|---|---|
| The preparer | | |
| - Followed power down procedure. | ____ | ____ |
| - Disconnected external power cord and external power/control cable(s). | ____ | ____ |
| - Followed service/reference/technical manual procedures for removing access and drive assembly base covers. | ____ | ____ |
| - Identified location of EMI/RFI shields. | ____ | ____ |
| - Made a drawing of analog card/control card socket-to-jack connections. | ____ | ____ |
| - Disconnected motor drive card, if necessary. | ____ | ____ |
| - Follow procedure for removing analog/ control card. | ____ | ____ |
| - Located front panel bezel on drive base with pencil. | ____ | ____ |
| - Followed service/technical manual procedures for removing mounting hardware. | ____ | ____ |

PERFORMANCE DETERMINANTS: (cont.)

| | YES | NO |
|---|---|---|
| - Followed service/technical manual procedures for installing replacement drive assembly. | ____ | ____ |
| - Aligned front panel bezel and drive unit correctly on chassis using pencil marks? | ____ | ____ |
| - Replaced and seated all cards, plugs, and jacks correctly. | ____ | ____ |
| - Replaced EMI/RFI shields. | ____ | ____ |
| - Ran cold-start diagnostics tests. | ____ | ____ |
| - Critiqued the student using this form. | ____ | ____ |

TEST ADMINISTRATORS INFORMATION

DUTY Servicing Computer Equipment

TASK Install disk drive assembly.

ENABLER Remove and replace disk drive.

Test Environment/Station Set Up:

- Workbench with AC power.
- Common tool kit.
- Computer/terminal system with disk drive.
- Replacement disk drive assembly
- Diagnostics disk for units without cold-start error checking.

Supplies, Equipment and References needed before test:

- Service/technical/hardware manual
- Pop-rivet gun with 1/8" pop-rivets
- Electric drill motor, 1/4" with 1/8" and 3/16" metal bits
- Mini vac and medium bristle brush
- Student checklist

Time allowed to perform test:

- 20 minutes (If necessary to relocate write protect sensor, stop after sensor is positioned.)
  Note: If necessary to relocate write-protect sensor, stop test time; restart test time after sensor is correctly positioned.

Special Instructions for Administering the Test:

- Checklist written to accomodate shugart, ALPS, LS laboratories,
  MPI, TEAC and Newtronics drive assemblies.
- Use the checklist to evaluate the student.
- Critique student on sequence and procedure using checklist.

GUIDE SHEET

DUTY: Servicing Computer Equipment

---

PERFORMANCE OBJECTIVE #77

TASK: Install main logic assembly.

STANDARD OF PERFORMANCE OF TASK:

Logic assembly must be functional and must pass diagnostic test.

SOURCE OF STANDARD:

Writing team of incumbent workers.

CONDITIONS FOR PERFORMANCE OF TASK:

Central processing unit
Screwdrivers
Nutdrivers
Circuit board puller
Service manual
Socket set

ENABLING OBJECTIVES:

1. Identify and physically locate dedicated peripheral card slot locations.
2. List configurations switch positions on peripheral cards e.g., logical numbers of tape processors, disk drives terminal interface, applications processors, language and evaluator cards.
3. Understand static handling procedures.

*RESOURCES:

1. Molecular Computer Series 36 Manual. 251 River Oaks Parkway, San Jose, CA, 95134.
2. Molecular Computer AP/86 and Terminal Concentrator. 251 River oaks Parkway, San Jose, CA, 95134.
3. Mostek Z80 Microcomputer Systems. Mostek, 125 West Crosby Rod, Carrollton TX, 75006.
4. Systems Data Catalog. Inte/Corporation, 3065 Bowers Avenue, Santa Clara, CA, 95051.
5. Manufacturer's Operating Manual.
6. Manufacturer's technical reference manual.
7. Manufacturer's service manual.
8. Checklist - removing main logic assembly.

TEACHING ACTIVITIES:

1. Present lecture on main logic assembly location and purpose.
2. Discuss physical appointments of computer systems. (*1,2,3,4)
3. Discuss hostboard concept. (*1,4)
4. Identify and locate dedicated peripheral slots. (*1)
5. Identify and locate main logic board for students.
6. Discuss hardware location and mounting of main logic board. (*1,2,4)
7. Identify and locate speaker leads, encoder board (if not pulled), keyboard cable, and any aftermarket leads.
8. Instruct students to remove main logic assembly. (*1,2,3,4,5,6 & 7)
9. Instruct student to install main logic assembly. (*1,2,3,4,5,6 & 7)
10. Discuss memory boards and memory maps. (*2,5,6 & 7)
11. Discuss memory boundaries, DIP-switches, and HEX rotary switches.
12. Discuss MSB and LSB boundry switches.
13. Demonstrate setting of 64K and 256K boundry switches.
14. Student set memory address switches on memory board.
15. Discuss peripheral cards, including switch settings and jumper options for tape storage, disk drives, printer options and video boards. (*2,5,6 & 7)
16. Assign student a procedure sheet for removing and installing main logic board.
17. Discuss manufacturers cautions.
18. Instruct student to mark manufacturers cautions on procedure sheets
19. Instruct student to remove and install main logic assembly.

CRITERION-REFERENCED MEASURE:

Student will remove and install a main logic board. All leads, connectors and peripheral cards must be properly located and seated.

PERFORMANCE GUIDE:

1. Turn off power and disconnect external cables.
2. Remove cover.
3. Remove peripheral cards from slots.
4. Loosen screws around edge of logic access panel.
5. Lift up logic board carefully.
6. Disconnect speaker cable, keyboard cable, and disk drive cable.
7. Mark where each plug goes.
8. Lift out logic assembly.
9. Lift up and remove the encoder board from its connector.

PERFORMANCE GUIDE: (cont.)

10. Lift memory board off the main logic board and disconnect.
11. Remove retaining screws/nuts from main logic board.
12. Ease plugs out of back and slide main logic board out peripheral connector opening.
13. Check insulating shield for position.
    Caution: Keep main logic board from shorting on access panel.
14. Replace main logic board.
15. Replace encoder board.
16. Replace memory board.
17. Plug in power supply.
18. Plug in disk cable, keyboard cable, and speaker cable.
19. Position logic assembly and tighten retaining screws/nuts on access panel.
20. Replace peripheral cables.
21. Run diagnostic test.
22. Replace cover.

CHECKLIST

DUTY Servicing Computer Equipment

TASK Install main logic assembly.

ENABLER Location and purpose of all leads, connectors, switches and card slots.

STUDENT'S NAME _____ DATE _____

EVALUATOR'S NAME _____ COURSE _____

TIME : STARTED _____ COMPLETED _____

TOTAL _____

DIRECTIONS TO THE EVALUATOR:

Use the following checklist to evaluate student performance while installing main logic assembly.

NOTE: Student must demonstrate competency in static handling procedures. Student knows purpose of dedicated peripheral slots and purpose/orientation of all cables, harnesses and jumpers prior to start of test.

| PERFORMANCE DETERMINANTS | YES | NO |
|---|---|---|
| The preparer | | |
| - Followed power down procedure. | ____ | ____ |
| - Removed external cables. | ____ | ____ |
| - Followed procedure for removing equipment and chassis covers. | ____ | ____ |
| - Identifed peripheral cards and make a drawing of peripheral card locations and switch/jumper settings. | ____ | ____ |
| - Loosen screws holding main logic board. | ____ | ____ |
| - Located and removed all cables connected to main logic board, i.e. keyboard, speaker, and interface. | ____ | ____ |
| - Made a accurate drawing of the cable locations and orientations. | ____ | ____ |
| - Prepared a non-static area to set main logic board, encoder board, and memory board. | ____ | ____ |

PERFORMANCE DETERMINANTS: (cont.)

| | YES | NO |
|---|---|---|
| - Removed main logic assembly following manufacturers procedures. | ____ | ____ |
| - Removed encoder board. | ____ | ____ |
| - Removed memory board. | ____ | ____ |
| - Removed mounting hardware from main logic assembly. | ____ | ____ |
| - Followed procedure for removing main logic board from cabinet. | ____ | ____ |
| - Held insulating shield in place or correctly repositioned. | ____ | ____ |
| - followed correct procedure for replacing main logic assembly. | ____ | ____ |
| - Installed and seated encoder board on main logic board. | ____ | ____ |
| - Installed and seated memory board. | ____ | ____ |
| - Set memory boundries. | ____ | ____ |
| - Installed all power plugs and harnesses. | ____ | ____ |
| - Installed keyboard and other cables. | ____ | ____ |
| - Checked cable orientation. | ____ | ____ |
| - Replaced logic assembly. | ____ | ____ |
| - Seated peripheral cards in slots. | ____ | ____ |
| - Replaced all peripheral cables. | ____ | ____ |
| - Passed diagnostic cold start test. | ____ | ____ |
| - Replaced equipment cover(s). | ____ | ____ |

TEST ADMINISTRATORS INFORMATION

DUTY Servicing Computer Equipment

TASK Install main logic assembly.

ENABLER Location and purpose of all leads, connectors, switches and card slots.

Test Environment/Station Set Up:

- Workbench with AC power.
- Working computer system with peripherals.
- Common tool kit.
- Circuit board puller.
- Procedure sheet or service manual.
- Socket set, 1/4 inch driver or hollow shaft nut-driver.

Supplies, Equipment and References needed before test:

- Conductive foam or mats.
- Antistatic strap.
- Brush, medium bristles.
- Memory board addresses (handout).
- Molecular model interconnect instalation and user manual (16X and 32X systems).
- Diagnostic diskette (cold start).

Time allowed to perform test:

- 25 minutes

Special Instructions for Administering the Test:

- If system requires a two diskette diagnostics system and application and there is a time delay (i.e. 20 seconds) caution students and make sure application disk is at the test station.
- Use checklist to evaluate student.

GUIDE SHEET

DUTY: Servicing Computer Equipment

---

PERFORMANCE OBJECTIVE #78

TASK: Install integrated circuit chips.

STANDARD OF PERFORMANCE OF TASK:

Integrated circuit chips must be functional and must pass diagnostic test free of error.

SOURCE OF STANDARD:

Writing team of incumbent workers.
How To Maintain and Service Your Small Computer.
Handbook of Computer Maintenance and Troubleshooting.
Troubleshooting and Repairing Personal Computers.

CONDITIONS FOR PERFORMANCE OF TASK:

Heat sink
Solder sucker
Soldering tool
Integrated circuit chip
Integrated circuit puller
Integrated circuit inserter
Service manual
Solder
Solder wick
Dies
Needle nose pliers

ENABLING OBJECTIVES:

1. Pass written test on precautions and correct handling of static integrated circuit chips.
2. Pass a written/pratical test using reference manuals to label pinouts of selected microprocessor, peripheral, interface, TTL, and CMOS integrated circuits.
3. Demonstrate proficiency soldering and desoldering on 1/10" centers.
4. Use lead forming dies, IC puller, and IC inserter.

*RESOURCES:

1. Signetics Logic - TTL Data Manual. Signetics, P.O. Box 9052, 811 East Arques Avenue, Sunnyvale, CA.

RESOURCES: (cont.)

2. Signetics Bipolar and MOS Memory. Signetics, P.O. Box 9052, 811 East Arque Avenue, Sunnyvale, CA.
3. Component Data Catalog. Intel Corporation, 3005 Bowers Avenue, Santa Clara, CA.
4. Motorola Linear & Interface IC's. Motorola Semiconductor, Box 20912, Phoenix, AZ.
5. Motorola Microprocessor Data Manual. Motorola Semiconductor, Box 20912, Phoenix, AZ.
6. Interface Databook. National Semiconductor, 2900 Semiconductor Drive, Santa Clara, CA.
7. MOS/LSI Databook. National Semiconductor, 2900 Semiconductor Drive, Santa Clara, CA.
8. CMOS Databook. National Semiconductor, 2900 Semiconductor Drive, Santa Clara, CA.
9. TTL Databook. National Semiconductor, 2900 Semiconductor Drive, Santa Clara, CA.
10. 1982 Catalog NEC Electronics USA, Inc.. NEC Electronics, Inc., Microcomputer Division, One Natick Executive Park, Natick, MA.
11. Hitachi Full Line Condensed Catalog. Hitachi Semiconductor and IC Sales and Service Division, 1800 Bering Drive, San Jose, CA.
12. Mostek Z80 Microcomputer Systems. Mosteck, 1215 West Crosby Road, Carrolton, TX.
13. Components and Devekopment Systems. Zilog, 10466 Bubbroad, Cupertino, CA.
14. Dynamic Random Access Memory. Fujitsu America, Inc., 2945 Keifer Road, Santa Clara, CA.
15. Art Margolis. Troubleshooting and Repairing Personal Computers. Tab Books Inc., Blue Ridge Summit, PA, 1983.
16. Stephenson and Cahil. How To Maintain and Service Your Small Computer. Howard W. Sams and Co., Inc., Indianapolis, IN, 1983.
17. Art Margolis. Computer Technician's Handbook, 2nd Edition. Tab Books Inc., Blue Ridge Summit, PA, 1985.
18. Visual Aids - Integrated chip identification and removal.
19. Checklist - Installing integrated circuit chips.

TEACHING ACTIVITIES:

1. Present lecture on types of integrated circuit chips and their identification.
2. Discuss power down procedures.
3. Discuss 54XX/74XX integrated circuits. (*1,7,8 & 11)
4. Discuss 74XX/CD4XXX integrated circuits. (*2,5,7,10,11 & 14)
5. Discuss linear IC's used on disk drives, motherboards, and main logic boards. (*4 & 6)
6. Discuss 8XXX/9XXX and ZXX series of integrated circuit chips. (*3,4,5 & 12)
7. Discuss 65XXX/68XXX series of integrated circuit. (*5,11 & 12)

TEACHING ACTIVITIES: (cont.)

8. Administer written test on voltage pinouts, e.g. Vcc Gnd, Vdd, and Vss. (*all)
9. Present lecture on procedures for installing integrated circuit chips.
10. Review handling of static integrated circuits. (*2,3,5,7,8,11,12,13, & 14)
11. Administer written test on handling of static integrated circuits.
12. Demonstrate removal of integrated circuit chip from the antistatic protective package.
13. Demonstrate grounding of chip inserter and placing of IC in the chip inserter.
14. Demonstrate step-by-step insertion of IC chip into board socket.
15. Instruct Student to remove integrated circuit from antistatic protective cover, ground inserter, and insert IC into a DIP socket.
16. Demonstrate use of solder wick.
17. Demonstrate use of desoldering pump or desoldering bulb.
18. Instruct Student to practice using desoldering aids on surplus boards.
19. Discuss hazard of using aerosol type flux removers on borads popluated with MOS/CMOS integrated circuits.
20. Instruct Student to practice installing integrated circuit chips on surplus PC boards.
21. Test student proficiency replacing socket mounted integrated circuit chips using checklist provided.
22. Test student proficiency removing and installing solder mounted integrated circuits using checklist provided.
23. Critique student using checklist. (*19)

CRITERION-REFERENCED MEASURE:

Student identifies pin no. 1 on an IC to be replaced and pi no. 1 on a new replacement IC and follows accepted practice in removing the old IC and replacing the new IC. The board was not delaminated and solder bridges were not formed.

PERFORMANCE GUIDE:

A. Non-Soldered Circuit:
   1. Turn off power; disconnect external cables.
   2. Remove cover.
   3. Identify integrated circuit chip.
   4. Note of chip orientation before removal.
   5. Insert tip of integrated circuit chip puller under the ends of integrated circuit chip and gently lift straight up.
      Note: Static electricity can damage integrated circuit chips. Technician should be grounded.

PERFORMANCE GUIDE: (cont.)

6. Remove integrated circuit chip from protective package.
7. Place integrated circuit chip in chip inserter.
8. Make sure pins are straight.
9. Align and insert one row of pins on integrated circuit chip into socket holes.
10. Align and insert second row of pins on integrated circuit chip into socket holes.
11. Gently press integrated circuit into socket.
12. Replace cover.
13. Run diagnostic test.

B. Soldered Circuit:
1. Turn off power.
2. Remove cover.
3. Identify the integrated circuit chip.
4. Note of chip location before removal.
5. Heat the integrated circuit pin until the solder at base of pin melts.
6. Remove solder with solder sucker of solder wick.
7. Grip the integrated circuit pin with a pair of needle nose pliers and gently move it until pin breaks free.
8. Repeat Steps 5 to 9 until all pins on integrated circuit chips are free.
9. Insert tips of integrated circuit puller under the end of the integrated circuit chip and gently lift straight up.
10. Clean the back of the circuit board with flux remover.
11. Place integrated circuit chip in chip inserter. NOTE: Make sure pins are straight.
12. Align and insert second row of pins into integrated circuit location.
13. Align and insert second row of pins into integrated circuit location.
14. Press circuit gently into designated chip location.
15. Solder each pin individually.
16. Run diagnostic test.
17. Replace cover.

# INTEGRATED CIRCUIT CHIP INSTALLATION TOOLS

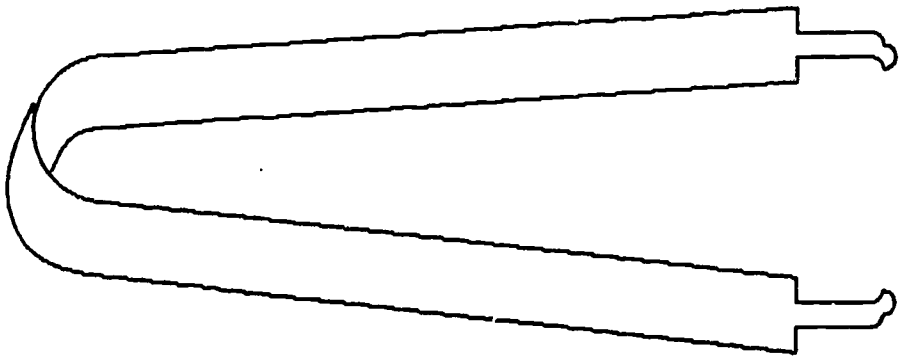

IC Extractor

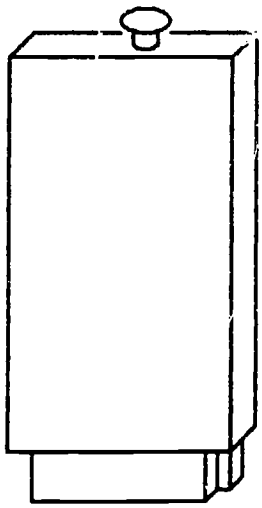

IC Insertor

CHECKLIST

DUTY Servicing Computer Equipment

TASK Install integrated circuit chips.

ENABLER Install socket mounted DIP integrated circuit.

STUDENT'S NAME _____ DATE _____

EVALUATOR'S NAME _____ COURSE _____

TIME : STARTED _____ COMPLETED _____

TOTAL _____

DIRECTIONS TO THE EVALUATOR:

Use the checklist for evaluation of removal and installation of DIP socket mounted integrated circuit.

| PERFORMANCE DETERMINANTS | YES | NO |
|---|---|---|
| The preparer | | |
| - Followed correct power down procedure. | ____ | ____ |
| - Followed the service/technical manual procedure for removing cover. | ____ | ____ |
| - Knew pin orientation of replacement chip. | ____ | ____ |
| - Used IC puller of remove old IC. | ____ | ____ |
| - Removed IC by pulling straight up. | ____ | ____ |
| - Grounded IC puller. | ____ | ____ |
| - Followed procedure for removing new IC chip from antistatic tunnel or foam. | ____ | ____ |
| - Seated new chip in chip inserter. | ____ | ____ |
| - Grounded chip inserter. | ____ | ____ |
| - Checked IC pins for straightness. | ____ | ____ |
| - Aligned and inserted pins into socket one row at a time. | ____ | ____ |
| - Seated IC into DIP socket. | ____ | ____ |
| - Followed correct button-up procedure. | ____ | ____ |
| - Checked diagnostics without error. | ____ | ____ |

CHECKLIST

DUTY Servicing Computer Equipment

TASK Install integrated circuit chips.

ENABLER Removal/installation of solder in IC.

STUDENT'S NAME _____ DATE _____

EVALUATOR'S NAME _____ COURSE _____

TIME : STARTED _____ COMPLETED _____

TOTAL _____

DIRECTIONS TO THE EVALUATOR:

Use the checklist for evaluation of removal and installation of solder in IC.

| PERFORMANCE DETERMINANTS | YES | NO |
|---|---|---|
| The preparer | | |
| - Followed power down procedure. | ____ | ____ |
| - Followed the service/technical manual procedure for removing cover. | ____ | ____ |
| - Identified pin orientation of replacement chip. | ____ | ____ |
| - Selected correct type of soldering pencil. (i.e. 2 wire or 3 wire) | ____ | ____ |
| - Followed procedure for removing solder from IC chip. | ____ | ____ |
| - Used IC puller to remove IC. | ____ | ____ |
| - Cleaned flux from PC board. | ____ | ____ |
| - Placed IC chip into chip inserter. | ____ | ____ |
| - Aligned and inserted the pins one pin at a time. | ____ | ____ |
| - Seated chip, level and flush. | ____ | ____ |
| - Soldered each pin without making solder bridges. | ____ | ____ |
| - Checked all foil traces. | ____ | ____ |
| - Followed correct button-up procedures. | ____ | ____ |
| - Checked diagnostics without error. | ____ | ____ |

# TEST ADMINISTRATORS INFORMATION

DUTY Servicing Computer Equipment

TASK Install integrated circuit chips.

ENABLER Remove and replace an integrated circuit chip.

Test Environment/Station Set Up:

- Workbench with AC power
- Common tool kit
- Desoldering tools and aids
- Computer/terminal equipment
- Static IC set

Supplies, Equipment and References needed before test:

- Data books: TTL, CMOS, MOS, INTERFACE, and MEMORY
- Antistatic IC puller(remover) and inserter
- Flux remover
- 60/40 solder and 3-wire solder pencil

Time allowed to perform test:

- 5 minutes for socket mounted IC.
- 15 minutes for 16 pin DIP IC - will depend on total package pincount.

Special Instructions for Administering the Test:

- Review CMOS/MOS handling procedures.
- Check student's identification of pin number.
- Use both checklists to evaluate student.

GUIDE SHEET

DUTY: Servicing Computer Equipment

---

PERFORMANCE OBJECTIVE #79

TASK: Install power light.

STANDARD OF PERFORMANCE OF TASK:

Power light indicator lights up when power is turned on.

SOURCE OF STANDARD:

Writing team of incumbent workers.
Handbook of Computer Maintenance and Troubleshooting.

CONDITIONS FOR PERFORMANCE OF TASK:

Central processing unit
Screwdriver
Nutdriver
Replacement bulb
Socket set
Needle nose pliers

ENABLING OBJECTIVES:

1. Identify basic indicator lamps by base style, i.e. minature screw, candelabra screw, minature bayonet, SC bayonet, DC bayonet, and LED.
2. Identify component parts of instrument/terminal class lamp sockets.
3. Figure bulb size based on shape column of lamp charts.

*RESOURCES:


1. Signetics Logic - TTL Data Manual. Signetics, P.O. Box 9052, 811 East Arques Avenue, Sunnyvale, CA.
2. Signetics Bipolar and MOS Memory. Signetics, P.O. Box 9052, 811 East Arque Avenue, Sunnyvale, CA.
3. Art Margolis. Troubleshooting and Repairing Personal Computers. Tab Books Inc., Blue Ridge Summit, PA, 1983.
4. Stephenson and Cahil. How To Maintain and Service Your Small Computer. Howard W. Sams and Company., Inc., Indianapolis, IN, 1983.

*RESOURCES: (cont.)

5. Bryon Maguire. Handbook of Computer Maintenance and Troubleshooting. Reston Publishing Company, Inc., Reston, VA, 1973.
6. Stan Gibilisco. Encyclopedia of Electronics. Tab Professional and Reference Books, Tab Books Inc., Blue Ridge Summit, PA, 1985.
7. Manufacturer's technical reference.
8. Manufacturer's service manual.
9. Checklist - Install power light.

TEACHING ACTIVITIES:

1. Present lecture on the type of lights used in computer's and peripheral devices.
2. Discuss modular indicator light assemblies.
3. Fabricate lamp/light socket display board. (*1)
4. Discuss dialight, datalamps datalamp cartridges and LED's (*1 & 6)
5. Discuss popular lamp base styles. (*1)
6. Discuss standard bulb styles and measurements.
7. Demonstrate use of pilot bulb remover; Type 506-0045 (T-3 1/2 and T-4 1/2) and Type 506-0070(T-3 1/2 and S-6)
8. Demonstrate removal of power light lamp using fingers and needle noses pliers.
9. Student develops skill at using lamp data: Given lamp number, student determines voltage, current rating, base style, and bulb diameter.
10. Instruct Student to remove bulb from standard insulated socket.
11. Instruct Student to remove cap/shielded bulb from instrument/terminal socket.
12. Evaluate student using checklist on removing and installing a power indicator light.
13. Critique student on results of evaluation.

CRITERION-REFERENCED MEASURE:

Student will remove and install an instrument/terminal class power light or indicator light.

PERFORMANCE GUIDE:

1. Power down.
2. Remove power light cap.
3. Remove light shield. (If half shield, leave on.)
4. Lift out bulb using fingers or needle nose pliers.
5. Check socket and wires for corrosion and wear.
6. Replace bulb, making sure all wires and sockets are in place.
7. Replace light shield (if removed).
8. Replace power light cap.
9. Power up.

CHECKLIST

DUTY Servicing Computer Equipment

TASK Install power light.

ENABLER Remove and replace power light.

STUDENT'S NAME _____ DATE _____

TIME : STARTED _____ COMPLETED _____

TOTAL _____

DIRECTIONS TO THE EVALUATOR:

Use the following checklist for evaluation of removal and replacement of power light.

| PERFORMANCE DETERMINANTS | YES | NO |
|---|---|---|
| The preparer | | |
| - Followed correct power down procedure. | ____ | ____ |
| - Removed the power light cap. | ____ | ____ |
| - Removed shield, if light used standard insrument/terminal class socket. | ____ | ____ |
| - Removed lamp from half-shield socket without removing shield. | ____ | ____ |
| - Removed lamp with fingers or needlenose pliers without breakage. | ____ | ____ |
| - Identified bulb using base marking data. | ____ | ____ |
| - Selected correct replacement lamp. | ____ | ____ |
| - Checked socket contacts for serviceability. | ____ | ____ |
| - Checked terminals and wires for serviceability. | ____ | ____ |
| - Checked mounting hardware for tightness. | ____ | ____ |
| - Seated replacement bulb in socket. | ____ | ____ |
| - Replaced shield, if present. | ____ | ____ |
| - Replaced socket cap. | ____ | ____ |
| - Tested power-on light. | ____ | ____ |

# TEST ADMINISTRATORS INFORMATION

DUTY Servicing Computer Equipment

TASK Install power light.

ENABLER Remove and replace power light.

Test Environment/Station Set Up:

- Workbench with AC power
- Common tool kit
- Computer/terminal with power indicator light

Supplies, Equipment and References needed before test:

- Lamp chart
- Assortment of bayonet base replacement lamps
- Technical/service manual for equipment to be serviced

Time allowed to perform test:

- 5 minutes
- Stop student test time if it is necessary to repair or replace socket or socket leads.

Special Instructions for Administering the Test:

- Critique student using checklist.

GUIDE SHEET

DUTY: Servicing Computer Equipment

---

PERFORMANCE OBJECTIVE #80

TASK: Install on-off switch.

STANDARD OF PERFORMANCE OF TASK:

Off-on switch must be functional and equipment must power up.

SOURCE OF STANDARD:

Writing team of incumbent workers.
Handbook of Computer Maintenance and Troubleshooting.

CONDITIONS FOR PERFORMANCE OF TASK:

Equipment to be serviced
Tool kit
New on-off switch

ENABLING OBJECTIVES:

1. Identify the location of assemblies that must be removed for access to switch.
2. Determine procedures for removing assemblies for access to switch.
3. Understand general requirements for removing and installing mechanical switches.
4. Pass cognitive test on switch symbology and designations.

*RESOURCES:


1. Molecular Computer Series 36 Manual. 21 River Oaks Parkway, San Jose, CA, 95134.
2. Apple reference manual; Apple computer, Inc., 10260 Bandley Drive, Cupertino, CA, 95014
3. Stephenson and Cahil. How To Maintain and Service Your Small Computer. Howard W. Sams and Company., Inc., Indianapolis, CA, 1983.
4. Art Margolis. Computer User's Guide to Electronics. Tab Books Inc., Blue Ridge Summit, PA, 1985.
5. Stan Gibilisco. Encyclopedia of Electronics. Tab Professional and Reference Books, Tab Books Inc., Blue Ridge Summit, PA, 1985.

*RESOURCES: (cont.)

6. Computer Facts. Howard W. Sons and Company., Inc., Indianapolis, IN.
7. Manufacturer's operator's manual.
8. Manufacturer's service manual.
9. Visual Aid - Types of switches.
10. Checklist - Removing and replacing on-off switches.

TEACHING ACTIVITIES:

1. Present lecture on type and purposes of on-off switches.
2. Physical placement of computer power switches. (*1 & 2)
3. Computer power supply modules, power supply open assemblies, power supply circuit boards, and power supplies integral to main/logic/CPU boards. (*1 & 2)
4. Physical location and functional location of computer power supply fuse (s) and switches. (1 & 2)
5. Discuss the descriptive marking (UL/CSA labeling) on switches.
6. Dicuss 'Up-Side' and 'Down-Side' mounting of switches.
7. Present lecture on obtaining access to switches.
8. Demonstrate chassis removal for gaining access to power supply switches.
9. Discuss physical location and functional location of power supply indicator lamp, fuse (s) and switches.
10. Demonstrate removal of switch plate hardware and connector heads.
11. Assign student to read manufacturers data on switch.
12. Instruct student to identify and locate substitute switches in catalog.
13. Instruct student to disassemblecomputer/terminal to gain access to power switch.
14. Instruct student to remove power switch.
15. Instruct student to install a power switch.
16. Instruct student to connect heads to power switch.
17. Instruct student to remove and install power supply switch in a timed test.
18. Instruct student to take competency test on switches.
19. Critique student using checklist.

CRITERION-REFERENCED MEASURE:

The stuent will gain access to power supply switch, remove faulty switch, install replacement switch and connect leads in accordance with manufacturer's specifications.

PERFORMANCE GUIDE:

1. Power down.

PERFORMANCE GUIDE: (cont.)

2. Disconnect equipment to be serviced from power supply.
3. Remove cover and dismantle equipment so that on-off switch is accessible.
4. Remove retaining screws from switch panel.
5. Disconnect switch panel connector from CPU board.
6. Unlatch switch retaining latches and remove switch.
7. Place new switch in place and latch retaining latches.
8. Attach switch panel connector to CPU board.
9. Replace retaining screws to switch panel.
10. Reassemble equipment and replace cover.
11. Reconnect equipment to power source.
12. Power up system and check if power lamp lights up.

# TYPES OF SWITCHES

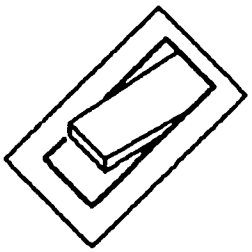

Rocker Switch

Pushbutton Switch with Lamp Indicators

Toggle Switch

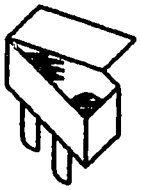

Microswitch- rectangular cased with Level Contactor

SPST

Single-Pole, Single-Throw

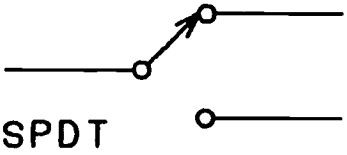

SPDT

Single-Pole, Double-Throw

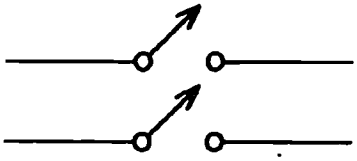

DPST

Double-Pole, Single-Throw

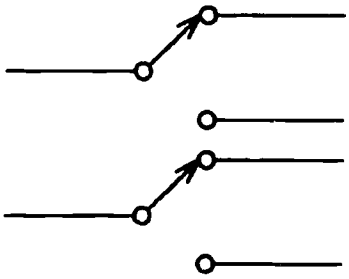

DPDT

Double-Pole, Double-Throw

CHECKLIST

DUTY Servicing Computer Equipment

TASK Install on-off switch.

ENABLER Remove and replace on-off switch.

STUDENT'S NAME _____ DATE _____

EVALUATOR'S NAME _____ COURSE _____

TIME : STARTED _____ COMPLETED _____

TOTAL _____

DIRECTIONS TO THE EVALUATOR:

Use the following checklist to evaluate installing an on-off switch.

| PERFORMANCE DETERMINANTS | YES | NO |
|---|---|---|
| The preparer | | |
| - Followed power down procedure. | ____ | ____ |
| - Removed the power cable from equipment. | ____ | ____ |
| - Followed the correct procedure in removing access covers. | ____ | ____ |
| - Followed the correct procedure in removing other assemblies for access to switch. | ____ | ____ |
| - Removed mounting plate screws. | ____ | ____ |
| - Removed leads and connectors. | ____ | ____ |
| - Compressed switch retaining latch while removing switch. | ____ | ____ |
| - Retained latch serviceable (either integral or separate compression). | ____ | ____ |
| - Followed installation procedure. | ____ | ____ |
| - Seated switch latches. | ____ | ____ |
| - Used correct procedure in connecting switch to subassembly. | ____ | ____ |
| - Checked on-off orientation. | ____ | ____ |

PERFORMANCE DETERMINANTS: (cont.)

| | YES | NO |
|---|---|---|
| - Replaced mounting hardware. | ____ | ____ |
| - Replaced modules and subassemblies. | ____ | ____ |
| - Followed button-up procedure. | ____ | ____ |
| - Connected power cable. | ____ | ____ |
| - Completed power-up system. | ____ | ____ |
| - Illuminated power indicator lamp and fuse(s) held load. | ____ | ____ |

TEST ADMINISTRATORS INFORMATION

DUTY Servicing Computer Equipment

TASK Install on-off switch.

ENABLER Remove and replace on-off switch.

Test Environment/Station Set Up:

- Workbench with AC power.
- Computer/Terminal System.
- Common tool kit.
- Crimping tool-solderless connect.

Supplies, Equipment and References needed before test:

- Medium bristle brush.
- Fast-on connector assortment.
- Operator's manual, technical reference manual, service manual. and/or Computer Facts servicing data.

Time allowed to perform test:

- 1.5 times maximum service rate.

Special Instructions for Administering the test:

- Use the checklist to evaluate the student.
- Critique student using checklist.

GUIDE SHEET

DUTY: Servicing Computer Equipment

---

PERFORMANCE OBJECTIVE #81

TASK: Install main printed circuit board.

STANDARD OF PERFORMANCE OF TASK:

Printed circuit board must be functional and system must power up.

SOURCE OF STANDARD:

Writing team of incumbent workers.

CONDITIONS FOR PERFORMANCE OF TASK:

Equipment to be serviced
Main printed circuit board
Tool Kit

ENABLING OBJECTIVES:

1. Identify on-board connectors and leads.

*RESOURCES:

1. Art Margolis. Computer User's Guide to Electronics. Tab Books Inc., Blue Ridge Summit, PA, 1985.
2. Stan Gibilisco. Encyclopedia of Electronics. Tab Professional and Reference Books, Tab Books Inc., Blue Ridge Summit, PA, 1985.
3. Computer Facts. Howard W. Sons and Company., Inc., Indianapolis, IN.
4. Stephenson and Cahil. How To Maintain and Service Your Small Computer. Howard W. Sams and Company., Inc., Indianapolis, IN, 1983.
5. Manufacturer's operator's manual.
6. Manufacturer's technical reference.
7. Manufacturer's service manual.
8. Checklist - Install main printed circuit board.

TEACHING ACTIVITIES:

1. Present lecture on purpose for installing a main printed circuit board. (*2,3 & 4)
2. Discuss the location and purpose of all plugs and jacks. (*1,5,6 & 7)

TEACHING ACTIVITIES: (cont.)

3. Demonstrate the location of all plugs and jacks using dismounted main printed circuit board.
4. Instruct the student to make a line drawing of main printed circuit board labeling all plugs, jacks and connector sockets.
5. Demonstrate the removal of main printed circuit board.
6. Demonstrate the installation of main printed circuit board.
7. Instruct student to remove and install a main printed circuit board using procedures sheet.
8. Test studeent on removal and installation of main printed circuit board using competency checklist.
9. Critique student using checklist.

CRITERION-REFERENCED MEASURE:

The student will remove and replace a main printed circuit board within times allowable warranty service time. (approximately 20 minutes)

PERFORMANCE GUIDE:

1. Power down system.
2. Disconnect AC power cord.
3. Remove cover.
4. Note location of cable connectors before removing them.
5. Unplug ribbon cable from printed circuit board.
6. Disconnect the ground wire from main printed circuit board.
7. Release main printed circuit board retaining fasterners.
8. Unplug encoder print circuit boards from main printed circuit board.
9. Remove main printed circuit board.
10. Insert new main printed circuit board.
11. Reconnect ground wires and cable connectors.
12. Plug in encoder printed circuit board.
13. Refasten main printed circuit board to base.
14. Reconnect ribbon cable.
15. Replace cover and reconnect AC power cord.
16. Power on and check power lamp.

CHECKLIST

DUTY Servicing Computer Equipment

TASK Install main printed circuit board.

ENABLER Remove and replace a main printed circuit board.

STUDENT'S NAME _____ DATE _____

EVALUATOR'S NAME _____ COURSE _____

TIME : STARTED _____ COMPLETED _____

TOTAL _____

DIRECTIONS TO THE EVALUATOR:

Use the following checklist to evaluate installing a main printed circuit board.
NOTE: Discuss any nonapplicable starting test.

| PERFORMANCE DETERMINANTS | YES | NO |
|---|---|---|
| The preparer | | |
| - Followed power down procedure. | ____ | ____ |
| - Disconnected AC power cord. | ____ | ____ |
| - Followed the correct procedure in removing access covers. | ____ | ____ |
| - Located and identified socket/plug /jack number. | ____ | ____ |
| - Noted orientation on all connectors not keyed. | ____ | ____ |
| - Unpluged all connectors from main printed circuit board. | ____ | ____ |
| - Removed all piggy-back boards from the main printed circuit board. | ____ | ____ |
| - Removed ground straps. | ____ | ____ |
| - Followed manufacturers procedure for removing main printed circuit board. | ____ | ____ |
| - Dismounted printed circuit boards handled and stored. | ____ | ____ |
| - Followed the correct procedures for installing new main printed circuit board. | ____ | ____ |

PERFORMANCE DETERMINANTS: (cont.)

| | YES | NO |
|---|---|---|
| - Installed ground-straps and ground connectors. | ____ | ____ |
| - Installed all piggy-back boards. | ____ | ____ |
| - Used correct procedure for installing spacers, standoffs, and mounting hardware. | ____ | ____ |
| - Mounted main printed circuit board securely to base. | ____ | ____ |
| - Secured and orientated cables secured. | ____ | ____ |
| - Followed correct button-up procedure. | ____ | ____ |
| - Connected power cord. | ____ | ____ |
| - Powered-up unit. | ____ | ____ |

TEST ADMINISTRATORS INFORMATION

DUTY Servicing Computer Equipment

TASK Install main printed circuit board.

ENABLER Remove and replace a main printed circuit board.

Test Environment/Station Set Up:

- Workbench with AC power.
- Computer System.
- Common tool kit.
- Replacement main printed circuit board.

Supplies, Equipment and References needed before test:

- Medium bristle brush.
- Technical maintenance manual.
- Diagnostic disk.
- Chechlist.

Time allowed to perform test:

- 20 minutes

Special Instructions for Administering the test:

- Line out doterminants on checklist not applicable to your equipment.
- If mounting standoffs, spacers, and screws are not same length
  -caution students.
- Critique student using checklist.

GUIDE SHEET

DUTY: Servicing Computer Equipment

---

PERFORMANCE OBJECTIVE #82

TASK: Install power supply printed circuit board.

STANDARD OF PERFORMANCE OF TASK:

Power supply circuit board must be functional and system must power up

SOURCE OF STANDARD:

Writing team of incumbent workers.

CONDITIONS FOR PERFORMANCE OF TASK:

Equipment to be serviced
Power supply printed circuit board
Tool kit

ENABLING OBJECTIVES:

1. Determine pin-outs of power-supply connector socket.
2. Determine the location of voltage adjustment resistors, resistor identification number and order of adjustment.

*RESOURCES:

1. Art Margolis. Computer User's Guide to Electronics. Tab Books Inc., Blue Ridge Summit, PA, 1985. Ridge Summit, PA, 1985.
2. Computer Facts. Howard W. Sons and Company., Inc., Indianapolis, IN.
3. Art Margolis. Troubleshooting and Repairing Personal Computers. Tab Books Inc., Blue Ridge Summit, PA, 1983.
4. Manufacturer's operator's manual.
5. Manufacturer's technical reference.
6. Manufacturer's service manual.
7. Checklist - Installing power supply printed circuit board.

TEACHING ACTIVITIES:

1. Present lecture on the purpose and location of power supply printed circuit board. (*1,2,3,4,5 & 6)

TEACHING ACTIVITIES: (cont.)

2. Discuss standard power supplies. (#1,5 & 6)
3. Discuss computer voltages and currents. (#1,2,3,4,5 & 6)
4. Discuss switching power supplies. (#1,2,3,4,5 & 6)
5. Show students dismounted printed circuit power supply.
6. Demonstrate correct voltage adjustment procedure.
7. Check student voltage adjustments on printed circuit power supply. (#1,2,3,4,5 & 6)
8. Demonstrate procedure for remaining printed circuit power supply from computer.
9. Instruct student to remove printed circuit power supply board from computer.
10. Demonstrate installation and voltage adjustment of printed circuit power supply.
11. Discuss competency checklist.
12. Instruct student to practice timed sequence of removing, installing, amd adjusting of printed circuit power supply.
13. Critique student using checklist.

CRITERION-REFERENCED MEASURE:

The student will replace a bolt-in power supply printed circuit board, connect harness and power-up system in 15 minutes. Both power supply and system must operate correctly.

PERFORMANCE GUIDE:

1. Power down system and disconnect AC power cord. CAUTION: Lethal voltage is present in power supply printed circuit board when the AC power cord is connected.
2. Dismantle equipment so that power supply printed circuit board is accessible:
3. Disconnect cable connectors from power supply printed circuit board.
4. Release fasterners holding board to frame.
5. Lift power supply printed circuit board from frame.
6. Insert new power supply printed circuit board on fasteners and latch them.
7. Attach cable connectors.
8. Reassemble equipment in reverse order of dismantle.
9. Reconnect AC power cord and power up system.

CHECKLIST

DUTY Servicing Computer Equipment

TASK Install power supply printed circuit board.

ENABLER Remove and replace power supply printed circuit board.

STUDENT'S NAME _____ DATE _____

EVALUATOR'S NAME _____ COURSE _____

TIME : STARTED _____ COMPLETED _____

TOTAL _____

DIRECTIONS TO THE EVALUATOR:

Use the following checklist to evaluate installing power supply printed circuit board.

| PERFORMANCE DETERMINANTS | YES | NO |
|---|---|---|
| The preparer | | |
| - Followed power-down procedures. | ____ | ____ |
| - Disconnected AC power cable. | ____ | ____ |
| - Disconnected interface cables. | ____ | ____ |
| - Gained access to power supply printed circuit board and made all connectors. | ____ | ____ |
| - Disconnected all power supply harnesses and connectors. | ____ | ____ |
| - Released or removed printed circuit board retaining hardware. | ____ | ____ |
| - Installed replacement printed circuit power supply board. | ____ | ____ |
| - Made required voltage checks and adjustments. | ____ | ____ |
| - Followed button-up system. | ____ | ____ |
| - Passed diagnostics test. | ____ | ____ |

TEST ADMINISTRATORS INFORMATION

DUTY Servicing Computer Equipment

TASK Install power supply printed circuit board.

ENABLER Remove and replace power supply printed circuit board.

Test Environment/Station Set Up:

- Workbench with AC power.
- Computer System.
- Common tool kit.
- Replacement printed circuit power supply.
- Digital voltmeter or FET meter.

Supplies, Equipment and References needed before Test:

- Medium bristle brush.
- Technical maintenance manual.
- Reference manual.
- Computer facts.

Time allowed to perform test:

- 15 minutes

Special Instructions for Administering the test:

- Personally check manufactures notes on order of voltage adjustments and reject tolerances.
- Use checklist to evaluate student.
- Critique student on checklist results.

GUIDE SHEET

DUTY: Servicing Computer Equipment

---

PERFORMANCE OBJECTIVE #83

TASK: Install drive motor.

STANDARD OF PERFORMANCE OF TASK:

Drive motor must run when powered up.

SOURCE OF STANDARD:

Writing team of incumbent workers.
How to Maintain and Service Your Small Computer.

CONDITIONS FOR PERFORMANCE OF TASK:

Equipment to be serviced
New drive motor
Tool kit

ENABLING OBJECTIVES:

1. Identify, remove and install all assemblies and sub-assemblies for access to drive motor.
2. Identify belt tension and tracking adjustments.

*RESOURCES:

1. Computer Facts. Howard W. Sons and Company., Inc., Indianapolis, IN.
2. Stephenson and Cahill. How to Maintain and Service Your Small Computer. Howard W. Sams and Company., Inc., Indianapolis, IN, 1983.
3. Manufacturer's operator's manual.
4. Manufacturer's technical reference.
5. Manufacturer's service manual.
6. Checklist - Installing drive motor.

TEACHING ACTIVITIES:

1. Present lecture on purpose and location of the drive motor. (*1,2,3,4 & 5)
2. Discuss centering or location of drive belt pulley.
3. Demonstrate centering adjustment of drive belt pulley using dismount drive motor/clutch assembly.
4. Instruct student to make pulley centering adjustment on dismounted motor/clutch assembly.

TEACHING ACTIVITIES: (cont.)

5. Demonstrate procedure for disconnecting motor drive voltage.
6. Demonstrate removal of motor from dismounted motor/clutch assembly.
7. Instruct student to disconnect and remove motor from dismounted motor/clutch assembly.
8. Discuss checking belt tension.
9. Discuss idler pulley adjustment.
10. Show students location of idle pulley adjusting screens.
11. Demonstrate adjustment of drive belt tension with 1kg of pressure at center of belt for 0.236-To-0.314 in deflection. (or as specified)
12. Demonstrate interdependence of tension adjusting screws on belt tracking.
13. Students adjust belt for tension and tracking.
14. Demonstrate removal of drive motor.
15. Demonstrate installation and adjustments of drive motor.
16. Instruct student to remove drive motor, install drive motor and make tension/tracking adjustments.
17. Instruct students to complete a timed pratical on removing and installing replacement drive motor.
19. Test student competency level using checklist.

CRITERION-REFERENCED MEASURE:

The student will remove and replace a drive motor and check drive motor belt for tension and tracking.

PERFORMANCE GUIDE:

1. Power down system and disconnect AC power source.
2. Dismantle equipment so drive motor is accessible:
   A. Cover
   B. Mechanical assembly
   C. Cables
3. Loosen drive belt adjusting nut and relieve tension from belt.
4. Remove drive belt from motor pulley.
5. Remove motor mounting screws.
6. Disconnect connectors from brush mountings on motor.
7. Lift drive motor from motor mount.
8. Place new motor on motor unit.
9. Place connectors on brush mountings and replace motor mounting screws.
10. Place drive belt on motor pulley and tighten adjusting screw to remove slack from belt.
11. Reassembly equipment, reconnect AC power cord and power up system.
12. Start drive motor running and check for slippage or binding.

CHECKLIST

DUTY Servicing Computer Equipment

TASK Install driver motor.

ENABLER Remove and replace a driver motor.

STUDENT'S NAME _____ DATE _____

EVALUATOR'S NAME _____ COURSE _____

TIME : STARTED _____ COMPLETED _____

TOTAL _____

DIRECTIONS TO THE EVALUATOR:

Use the following checklist to evaluate installing a drive motor.

| PERFORMANCE DETERMINANTS | YES | NO |
|---|---|---|
| The preparer | | |
| - Followed correct power-down procedures. | ____ | ____ |
| - Disconnected AC power cable. | ____ | ____ |
| - Disconnected interface cables. | ____ | ____ |
| - Followed correct procedure for access to motor drive. | ____ | ____ |
| - Followed correct procedure for removing tension from drive belt. | ____ | ____ |
| - Followed correct procedure in removing drive motor from mount. | ____ | ____ |
| - Followed correct procedure for disconnecting drive motor power leads. | ____ | ____ |
| - Followed correct procedure for installing a drive motor. | ____ | ____ |
| - Adjusted belt tension. | ____ | ____ |
| - Adjusted belt tracking. | ____ | ____ |
| - Mounted other sub-assemblies. | ____ | ____ |
| - Connected all jacks and sockets. | ____ | ____ |
| - Connected interface cables and AC power cable. | ____ | ____ |
| - Operated motor and belt. | ____ | ____ |

# TEST ADMINISTRATORS INFORMATION

DUTY Servicing Computer Equipment

TASK Install drive motor.

ENABLER Remove and replace a drive motor.

Test Environment/Station Set Up:

- Workbench with AC power.
- Computer System with printer.
- Common tool kit.
- Replacement motor.
- Replacement belt.

Supplies, Equipment and References needed before test:

- Operators technical manual or Computerfacts.
- Medium bristle brush.

Time allowed to perform test:

- 1.5 times service center time.

Special Instructions for Administering the Test:

- Use checklist to evaluate student.

GUIDE SHEET

DUTY: Servicing Computer Equipment

---

PERFORMANCE OBJECTIVE #84

TASK: Install print hammer.

STANDARD OF PERFORMANCE OF TASK:

Print hammer must be functional and must print clear letters.

SOURCE OF STANDARD:

Writing team of incumbent workers.
How to Maintain and Service Your Small Computer.

CONDITIONS FOR PERFORMANCE OF TASK:

Printer to be serviced
New print hammer
Tool kit
Service manual (manufacturer's specifications)

ENABLING OBJECTIVES:

1. Identify and physically locate print head, printhead fingerboard (or connector) video amplifier or logic/pulse board, carriage solenoid wires, penetration adjustments, print head ribbon guides, clamping spring and clamping spring retainer.

*RESOURCES:

1. Stephenson and Cahil. How to Maintain and Service Your Small Computer. Howard W. Sams and Company., Inc., Indianapolis, IN, 1983.
2. Computer Facts. Howard W. Sams and Company., Inc., Indianapolis, IN,
3. Manufacturer's operator manual.
4. Manufacturer's technical reference.
5. Manufacturer's service manual.
6. Checklist - Installing print hammer.

TEACHING ACTIVITIES:

1. Present lecture on the function and location of the print hammer. (*1,2,3,4 & 5)

TEACHING ACTIVITIES: (cont.)

2. Discuss basic block diagram of printer. (#1,2,3, 4 & 5)
3. Discuss control panel and demonstrate built-in test printing routine.
4. Instruct student to use built-in test printing routine.
5. Discuss print commands, paper movement and special functions.
6. Discuss and demonstrate head control and carriage activator solenoids.
7. Discuss paper motion control.
8. Instruct student to draw and label basic block diagram of printer.
9. Discuss the relationship of line buffer output; character generator, control timing and write pulses to the print head.
10. Assign student a cognitive test on line buffer, character generator and printhead.
11. Demonstrate removal of ribbon cartridge.
12. Demonstrate penetration adjustment.
13. Instruct student to remove ribbon cartridge, install ribbon cartridge and make penetration adjustment.
14. Demonstrate removal of printhead. (#2 & 5)
15. Instruct student to remove ribbon cartridge, print head, install printhead, install ribbon cartridge and turn in sample print run.
16. Critique student performance using checklist.

CRITERION-REFERENCED MEASURE:

The student will locate print hammer, determine reason for malfunction and either repair old hammer or install a new print hammer.

PERFORMANCE GUIDE:

1. Power down printer and remove cover.
2. Remove print hammer and adjustment screws and remove nut plate and assembly.
3. Slide print hammer out of assembly. Take care to hold hammer spring in place when disconnecting.
4. Slide new hammer into place and connect spring.
5. Replace assembly and insert adjusting screws.
6. Replace nut plate and tighten screws.
7. Adjust print hammer to manufacturer's specification.
8. Replace cover and power up printer.
9. Print sample to make sure hammer is working properly.

CHECKLIST

DUTY Servicing Computer Equipment

TASK Install print hammer.

ENABLER Remove and replace print hammer.

STUDENT'S NAME _____ DATE _____

EVALUATOR'S NAME _____ COURSE _____

TIME : STARTED _____ COMPLETED _____

TOTAL _____

DIRECTIONS TO THE EVALUATOR:

Use the following checklist to evaluate installing a print hammer.

| PERFORMANCE DETERMINANTS | YES | NO |
|---|---|---|
| The preparer | | |
| - Followed power-down procedures. | ____ | ____ |
| - Followed procedures to remove clear see-through cover and chassie cover. | ____ | ____ |
| - Followed procedures to remove ribbon cartridge. | ____ | ____ |
| - Followed technical service procedure to remove print hammer. | ____ | ____ |
| - Followed procedures to install print hammer. | ____ | ____ |
| - Adjusted penetration mechanism to manufactures specifications. | ____ | ____ |
| - Followed correct button-up procedures. | ____ | ____ |
| - Followed printer powered-up. | ____ | ____ |
| - Printed character set. | ____ | ____ |

TEST ADMINISTRATORS INFORMATION

DUTY Servicing Computer Equipment

TASK Install print hammer.

ENABLER Remove and replace a print hammer.

Test Environment/Station Set Up:

- Workbench with AC power.
- Printer.
- Common tool kit.
- Working print hammer.

Supplies, Equipment and References needed before test:

- Handout on removing dried ink from hammer.
- Technical, service, and maintenance manuals.
- Sample of good character set.
- Checklist.

Time allowed to perform test:

- 20 minutes.

Special Instructions for Administering the Test:

- Test student on manufactures cautions on removing ink/ribbon residue.
- Test student on manufactures cautions on hammer springs and retainer springs.
- Use the checklist to evaluate student.

GUIDE SHEET

DUTY: Servicing Computer Equipment

---

PERFORMANCE OBJECTIVE #85

TASK: Install print mechanism.

STANDARD OF PERFORMANCE OF TASK:

Print mechanism (dot matrix head, print ball or thimble, or daisy wheel) must be changed to correct lettering problems (uneven print density, incomplete characters, missing letters), or to change the type style to be printed.

SOURCE OF STANDARD:

Writing team of incumbent workers.
How to Maintain and Service Your Small Computer.

CONDITIONS FOR PERFORMANCE OF TASK:

Printer to be serviced
Print mechanism replacement
Tool kit

ENABLING OBJECTIVES:

1. Recognize print problem caused by uneven print density, deformed characters, incomplete characters and missing characters.
2. Word processor and ASCII formats.

*RESOURCES:

1. Stephenson and Cahill. How to Maintain and Service Your Small Computer. Howard W. Sams and Company., Inc., Indianapolis, IN, 1983.
2. Computer Facts. Howard W. Sams and Company., Inc., Indianapolis, IN,
3. Manufacturer's operator manual.
4. Manufacturer's technical reference.
5. Manufacturer's service manual.
6. Checklist - Installing print mechanism.
7. Visual Aid - Print mechanism.

TEACHING ACTIVITIES:

1. Present lecture on the purpose and location of the print mechanism. (*1,2,3,4 & 5)

TEACHING ACTIVITIES: (cont.)

2. Discuss print wheel print types, arrangement, and character totals. General office supply catalogs- e.g.- Ames, Moore, Devoe, NCR etc.
3. Assign student activity - Develop interchangeability chart for print wheels and print thimbles using 5 office machine supply catalogs.
4. Discuss print self-test procedures.
5. Instruct student to run printer self-test.
6. Discuss cleaning of print wheels. (#1,2 & 5)
7. Demonstrate cleaning of print wheels. (#2 & 5)
8. Instruct student to clean printwheels.
9. Instruct student to replace print wheels.
10. Instruct student to replace print thimble.
11. Evaluate student installing print mechanism. e.g., print ball, print wheel, print thimble and dot-matrix head using checklist.
12. Critique student on test performance using checklist.

CRITERION-REFERENCED MEASURE:

The student will identify the typo of print mechanism, determine problem with print mechanism and either repair the mechanism or install a new print mechanism.

PERFORMANCE GUIDE:

1. Power down printer.
2. Disconnect print mechanism from carrier:
   A. Ball or thimble usually have a retaining latch.
   B. Dot-matrix head have retaining screws.
   C. Daisy wheels usually snap into position.
3. Check print mechanism for missing arms, chipped or broken cogs, broken or filled letters or wires.
4. Clean old print mechanism or obtain new one.
5. Replace print mechanism to carrier and reconnect it.
6. Power up printer and print test run to check quality.

## TYPES OF PRINT HEAD MECHANISMS

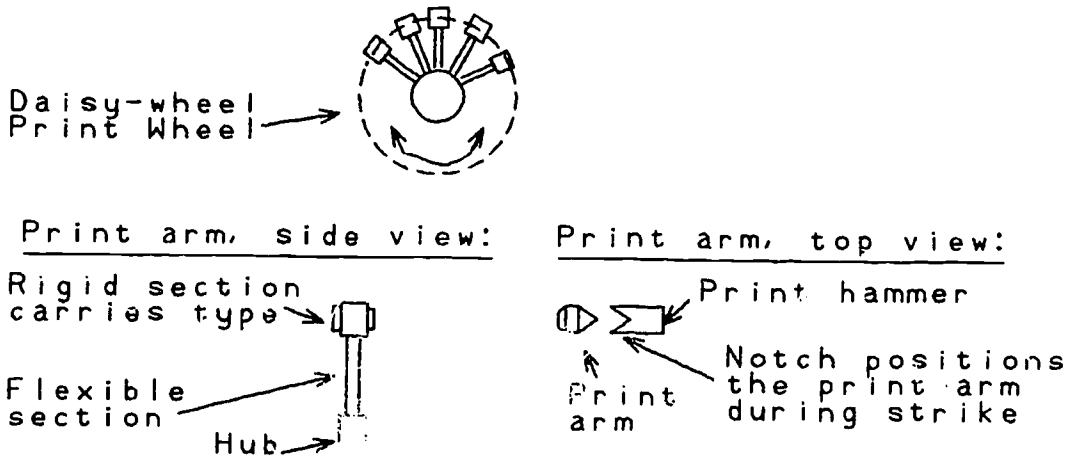


DAISY-WHEEL PRINT MECHANISM

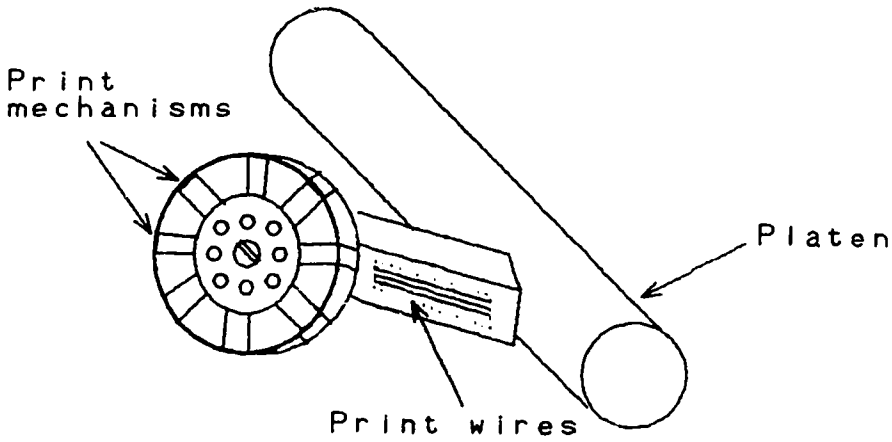


DOT MATRIX PRINT HEAD MECHANISM

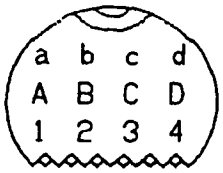


BALL PRINT HEAD MECHANISM

THIMBLE PRINT HEAD MECHANISM

CHECKLIST

DUTY Servicing Computer Equipment

TASK Install print mechanism.

ENABLER Remove and replace print mechanism.

STUDENT'S NAME _____ DATE _____

EVALUATOR'S NAME _____ COURSE _____

TIME : STARTED _____ COMPLETED _____

TOTAL _____

DIRECTIONS TO THE EVALUATOR:

Use the following checklist to evaluate installing a print mechanism.

| PERFORMANCE DETERMINANTS | YES | NO |
|---|---|---|
| The preparer | | |
| - Obtained sample print to evaluate. | ____ | ____ |
| - Followed power-down procedures. | ____ | ____ |
| - Removed interface cables. | ____ | ____ |
| - Removed power cable. | ____ | ____ |
| - Followed procedures for removing ribbon. | ____ | ____ |
| - Centered print mechanism. | ____ | ____ |
| - Followed procedures for removing print mechanism. | ____ | ____ |
| - Cleaned and/or replaced print mechanism. | ____ | ____ |
| - Replaced ribbon. | ____ | ____ |
| - Replaced computer-to-printer cables. | ____ | ____ |
| - Powered-up system. | ____ | ____ |
| - Ran a print test. | ____ | ____ |
| - Corrected problem. | ____ | ____ |

# TEST ADMINISTRATORS INFORMATION

DUTY Servicing Computer Equipment

TASK Install print mechanism.

ENABLER Remove and replace print mechanism.

Test Environment/Station Set Up:

- Workbench with AC power.
- Computer system with printer.
- Common tool kit.
- Sample print sheet.

Supplies, Equipment and References needed before test:

- Cleaning material.
- Replacement print mechanism.
- Operators and technical manuals.

Time allowed to perform test:

- 10 minutes.

Special Instructions for Administering the Test:

- Manufacture's cautions on cleaning of print mechanisms should be explained to student.
- Use the checklist to evaluate student.

GUIDE SHEET

DUTY: Servicing Computer Equipment

---

PERFORMANCE OBJECTIVE #86

TASK: Install carriage assembly.

STANDARD OF PERFORMANCE OF TASK:

Carriage assembly exchanged must correct a problem with the ribbon motor, print wheel motor, print assembly motor or encoder printed circuit board.

SOURCE OF STANDARD:

Writing team of incumbent workers.

CONDITIONS FOR PERFORMANCE OF TASK:

Printer to be serviced
New carriage assembly
Tool kit

ENABLING OBJECTIVES:

1. Identify hardware mounting carriage assembly to printer case.
2. List by name and function all cards, connectors, and subassemblies connected to the carriage assembly.

*RESOURCES:

1. Stephenson and Cahill. How to Maintain and Service Your Small Computer. Howard W. Sams and Company., Inc., Indianapolis, IN, 1983.
2. Computer Facts. Howard W. Sams and Company., Inc., Indianapolis, IN .
3. Manufacturer's operator manual.
4. Manufacturer's technical reference.
5. Manufacturer's service manual.
6. Checklist - Installing carriage assembly.
7. Visual Aid - Types of carriage assemblies.

TEACHING ACTIVITIES:

1. Present lecture on the purpose and location of carriage assembly. (*1,2,3,4 & 5)

TEACHING ACTIVITIES: (cont.)

2. Instruct student to develop block diagram discussion of initializing, data input, character printing, carriage and ribbon movement, paper motion, and power supplies.
3. Demonstrate location of printer sub assemblies.
4. Demonstrate removal of subassemblies.
5. Demonstrate removal of lightweight carriage assembly.
6. Demonstrate removal of standard carriage assembly.
7. Instruct student to remove subassemblies.
8. Instruct student to remove carriage assembly.
9. Demonstrate installation of carriage assembly.
10. Demonstrate adjustments and special tools.
11. Demonstrate installation and connection of subassemblies.
12. Instruct student to remove and install carriage assembly.
13. Assigned timed exercise - removal and installation of carriage assembly.
14. Instruct student to take a performance test.
15. Critique student using performance checklist.

CRITERION-REFERENCED MEASURE:

The student will remove and install a lightweight carriage assembly and a standard carriage assembly in 1.5 times manufacturing service center time.

PERFORMANCE GUIDE:

1. Power down system and disconnect AC power cord.
2. Remove retaining screws holding the mechanical assembly to the bottom of the case.
3. Remove ribbon, print wheel and platen.
4. Mark the position and routing of cables and remove them.
5. Unplug bottom encoder printed circuit board from main printed circuit board.
   NOTE: Encoder printed circuit board is an important part of the carriage assembly and a new one will be provided with the new carriage assembly.
6. Loosen ribbon shield retaining screws and remove shields.
7. Loosen drive belt adjusting nut to relieve belt tension and remove belt from carriage assembly.
8. Loosen rear guide shaft locking plate screws and slide rear guide shaft mounting slots and pull the carriage assembly off the grooved front bearing.
9. Slide the rear guide shaft out of the carriage assembly.
10. Disconnect harness cable from the side of the printer case.
11. Remove carriage assembly from the printer.

PERFORMANCE GUIDE: (cont.)

12. Slide rear guide shaft into new carriage assembly.
13. Place the carriage assembly into grooved front bearing.
14. Replace the rear shaft locking plates and tighten the screws.
15. Replace drive belts and tighten belt adjusting nut.
16. Replace harness cable and move carriage assembly back and forth to make sure it runs free.
17. Reconnect the encoder printed circuit board into main printed circuit board.
18. Replace the ribbon shield, cradle, platen, print wheel and ribbon.
19. Adjust drive belt tension.
20. Replace the mechanical assembly screw on the bottom of printer.
21. Power up printer and test its operation.

# TYPES OF CARRIAGE ASSEMBLY

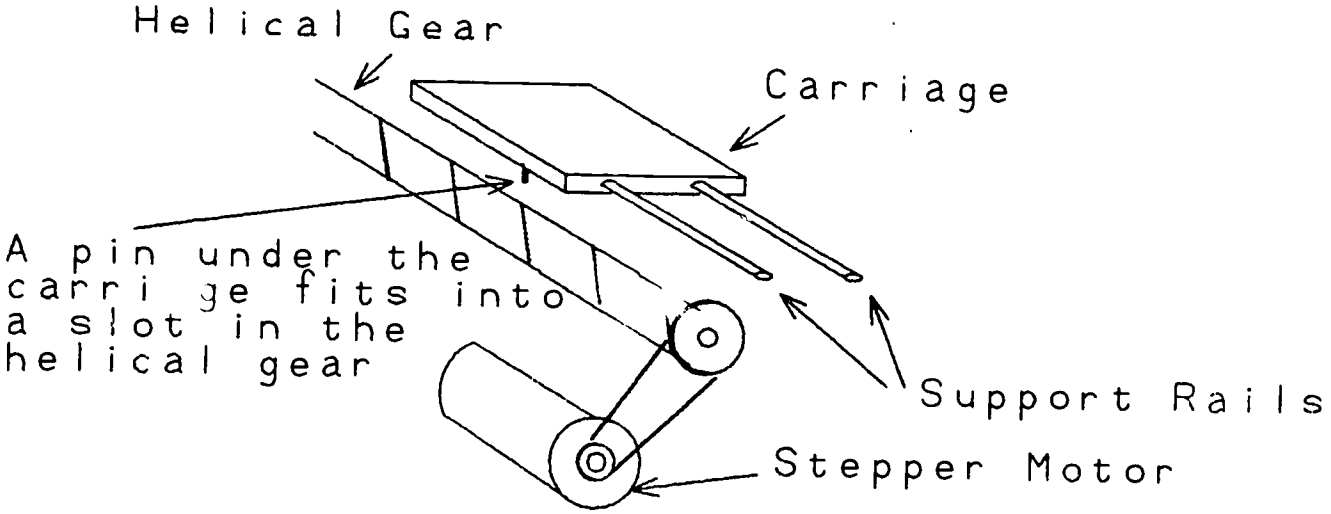


HELICAL-GEAR CARRIAGE ASSEMBLY

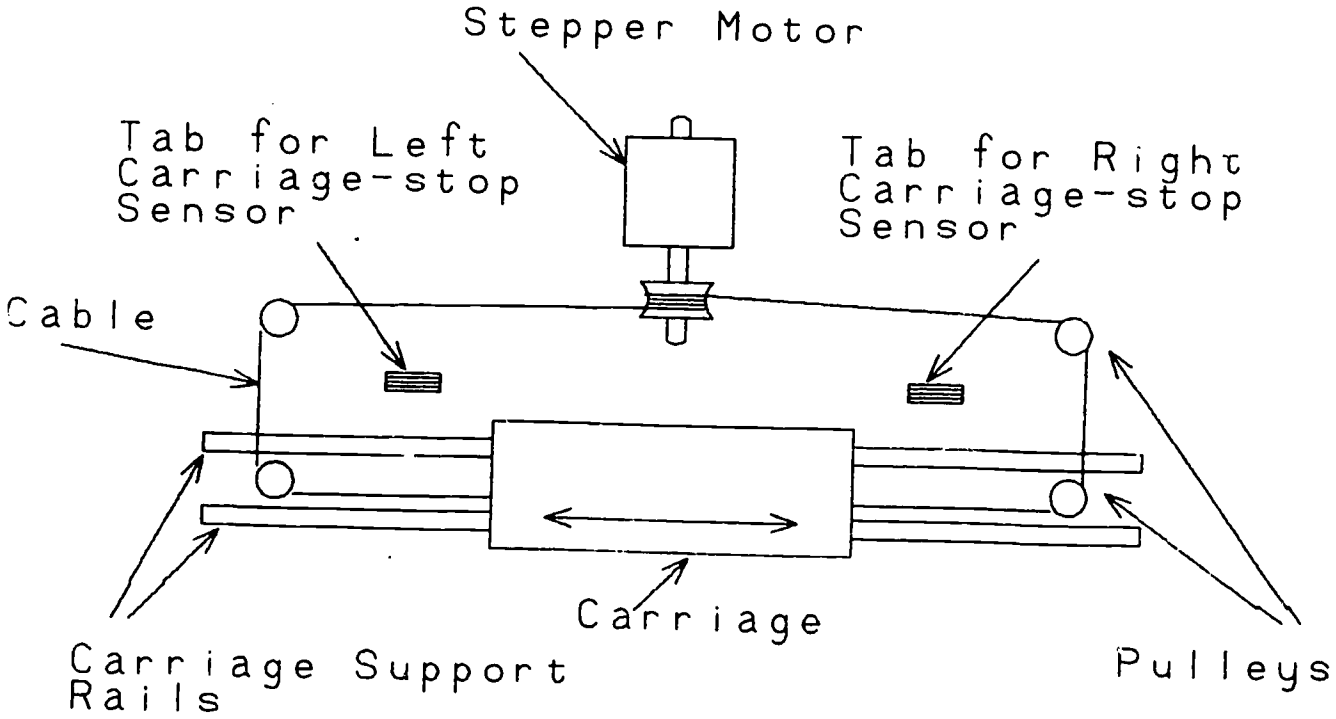


CABLE CARRIAGE ASSEMBLY

CHECKLIST

DUTY Servicing Computer Equipment

TASK Install carriage assembly.

ENABLER Remove and replace a carriage assembly.

STUDENT'S NAME _____ DATE _____

EVALUATOR'S NAME _____ COURSE _____

TIME : STARTED _____ COMPLETED _____

TOTAL _____

DIRECTIONS TO THE EVALUATOR:

Use the following checklist to evaluate installing a carriage assembly.

| PERFORMANCE DETERMINANTS | YES | NO |
|---|---|---|
| The preparer | | |
| - Followed power down. | ____ | ____ |
| - Removed AC power cord. | ____ | ____ |
| - Removed interface cables. | ____ | ____ |
| - Removed and stored transparent covers. | ____ | ____ |
| - Removed mounting hardware. | ____ | ____ |
| - Followed procedures for removing ribbon printwheel, and platen. | ____ | ____ |
| - Disconnected cables and noted routing. | ____ | ____ |
| - Removed P.C. boards as necessary. | ____ | ____ |
| - Loosen shields as necessary. | ____ | ____ |
| - Released tension on the drive motor belt. | ____ | ____ |
| - Followed procedures for removing carriage from clutch/ motor assembly. | ____ | ____ |
| - Disconnected all harnesses. | ____ | ____ |
| - Removed carriage assembly from printer cabinet. | ____ | ____ |

PERFORMANCE DETERMINANTS: (cont.)

| | YES | NO |
|---|---|---|
| - Mated replacement carriage correctly to motor/clutch assembly. | ____ | ____ |
| - Tightened motor/clutch hardware according to manufacturers specifications. | ____ | ____ |
| - Adjusted belt tension. | ____ | ____ |
| - Replaced all harness and connectors. | ____ | ____ |
| - Checked carriage travel. | ____ | ____ |
| - Replaced support boards. | ____ | ____ |
| - Replaced and adjusted ribbon shield, cradle and platen. | ____ | ____ |
| - Tested carriage assembly. | ____ | ____ |
| - Connected printer to computer system. | ____ | ____ |
| - Passed print test. | ____ | ____ |

# TEST ADMINISTRATORS INFORMATION

DUTY Servicing Computer Equipment

TASK Install carriage assembly.

ENABLER Remove and replace a carriage assebly.

Test Environment/Station Set Up:

- Workbench with AC power.
- Computer system with printer.
- Common tool kit.
- Special tools:
  a. spanner wrench.
  b. snap ring holder.
  c. spring hook.
  d. alignment tools (for clutch, motor, and drivebelt.)

Supplies, Equipment and References needed before test:

- Printer paper.
- Replacement carriage assembly.
- Operators and technical manuals, or Computerfacts.

Time allowed to perform test:

- 1.5 time standard service time for that specific model.

Special Instructions for Administering the Test:

- Review manufactures cautions with student prior to starting test.
- Use the checklist to evaluate student.

GUIDE SHEET

DUTY: Servicing Computer Equipment

---

PERFORMANCE OBJECTIVE #87

TASK: Install paper feed assembly.

STANDARD OF PERFORMANCE OF TASK:

Paper feed assembly correct paper feed problems caused by tractor feed mechanism, drive rod or platen problems.

SOURCE OF STANDARD:

Writing team of incumbent workers.
How to Maintain and Service Your Small Computer.

CONDITIONS FOR PERFORMANCE OF TASK:

Printer to be serviced
Drive rod
Tractor feed mechanism
Tool kit

ENABLING OBJECTIVES:

1. Identify and label gears in a line feed clutch assembly.
2. Remove and install a pinch-roller assembly.
3. Identify and label the major moving parts on a pinfeed left and right assembly.

*RESOURCES:

1. Stephenson and Cahill. How to Maintain and Service Your Small Computer. Howard W. Sams and Company., Inc., Indianapolis, IN, 1983.
2. Computer Facts. Howard W. Sams and Company., Inc., Indianapolis, IN,
3. Manufacturer's operator manual.
4. Manufacturer's technical reference.
5. Manufacturer's service manual.
6. Checklist - Installing carriage assembly.
7. Visual Aid - Types of carriage assemblies.

TEACHING ACTIVITIES:

1. Present lecture on purpose and location of paper feed assembly. (*1,2,3,4 & 5)

TEACHING ACTIVITIES: (cont.)

2. Show students dismounted line feed clutch with power plug.
3. Assign students exploded drawing of line feed clutch and discuss gears, ratchet, and solenoid.
4. Instruct student to label parts of exploded drawing of line feed clutch.
5. Discuss platen assembly.
6. Discuss pinch roller assembly.
7. Assign students exploded line drawing of platten assembly. Discuss and label parts.
8. Assign student exploded line drawing of pinch roller assembly. Discuss and label all parts.
9. Instruct student to take a cognitive test on the complete feed assembly.
10. Student removes complete left and right pin feed mechanism.
11. Instruct student to install paper feed assembly.
12. Instruct student to take a timed practical test on removing platen assembly, pinch roller assembly and tractor drive assembly.
13. Instruct student to take a timed practical test on installing tractor drive assembly, pinch roller and platen assembly.
14. Critique student using checklist.

CRITERION-REFERENCED MEASURE:

The student will install a paper feed assembly after checking the drive belt, drive gear, clutch, feed rod and tractor drive pins for service ability within 1.5 times manufacturer's service center time.

PERFORMANCE GUIDE:

1. Power down printer and disconnect AC power cord.
2. Remove printer cover and drive rod retainers.
3. Remove paper feed assembly.
4. Remove tractor feed mechanisms from drive rod.
5. Remove platens and drive belt and check gears and belts for missing cogs or excessive wear.
6. Replace tractor feed mechanisms if tractor drive pins are bent or missing.
7. Replace drive rod is bent.
8. Replace platens and drive belt if cogs are missing or showing excessive wear.
9. Place paper feed assembly into place.
10. Replace drive rod retainers.
11. Replace printer cover and reconnect AC power cord.
12. Load paper into printer to check paper feed assembly.

# TYPES OF PAPER FEED ASSEMBLIES

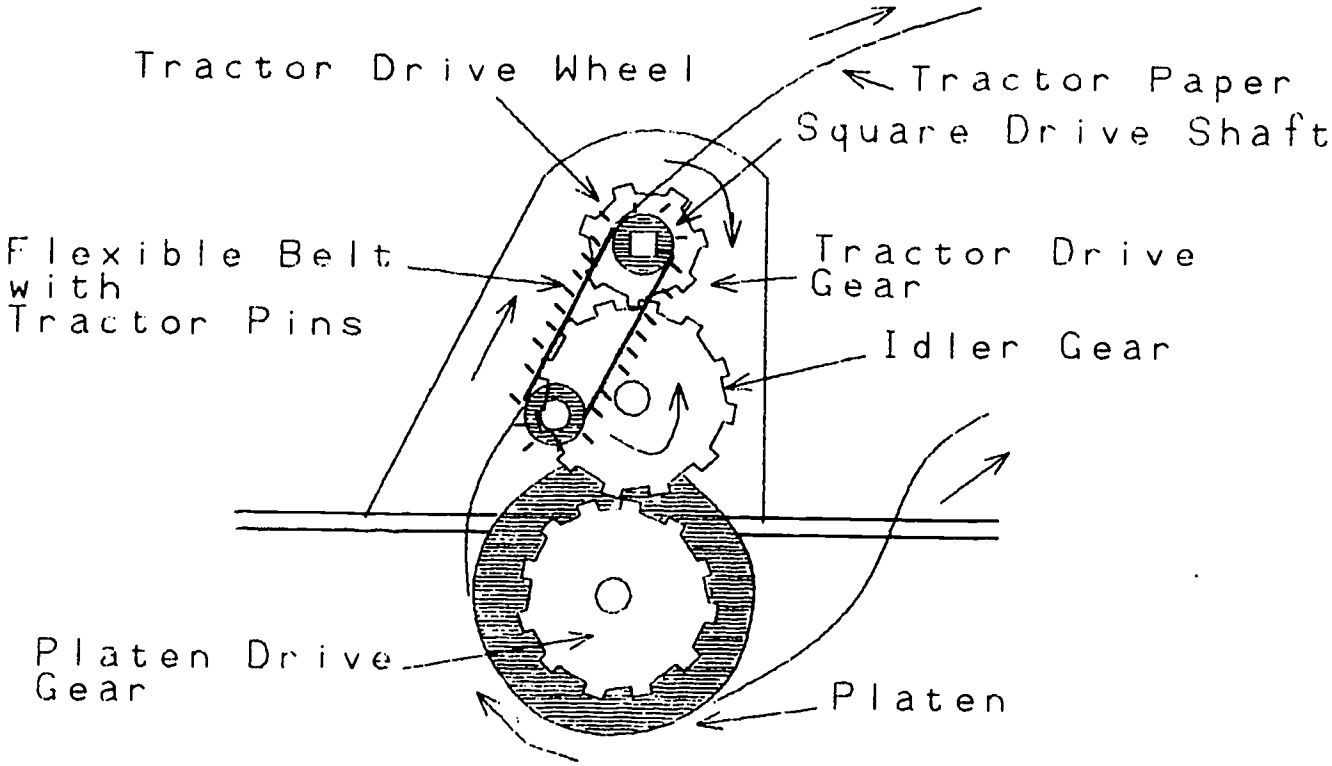


TRACTOR-FEED ASSEMBLY

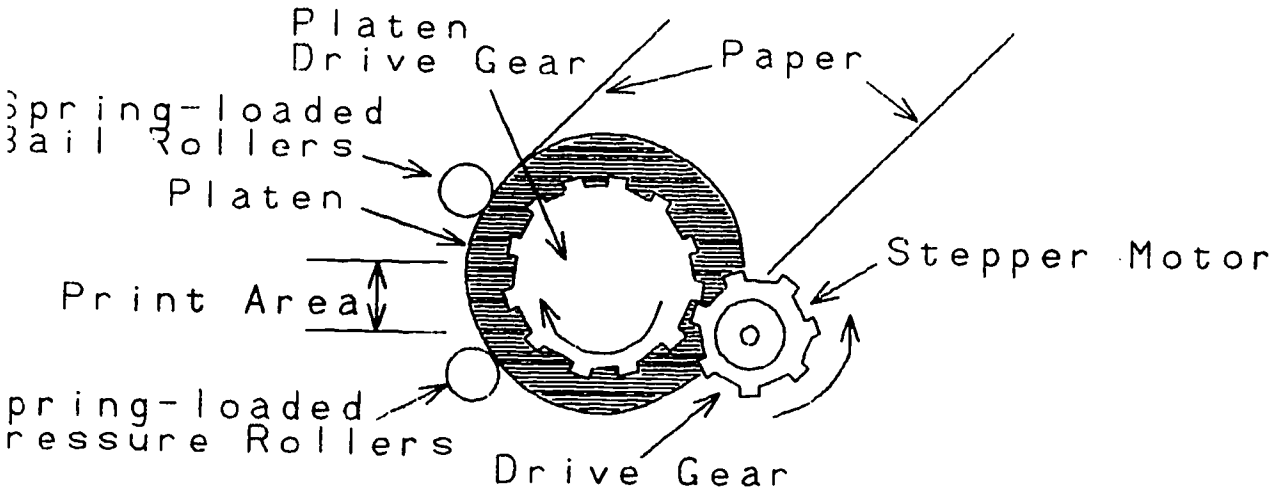


FRICTION-FEED ASSEMBLY

CHECKLIST

DUTY Servicing Computer Equipment

TASK Install paper feed assembly.

ENABLER Remove and replace a paper feed assembly.

STUDENT'S NAME _____ DATE _____

EVALUATOR'S NAME _____ COURSE _____

TIME : STARTED _____ COMPLETED _____

TOTAL _____

DIRECTIONS TO THE EVALUATOR:

Use the following checklist to evaluate installing a paper feed assembly

| PERFORMANCE DETERMINANTS | YES | NO |
|---|---|---|
| The preparer | | |
| - Followed power down procedure. | ____ | ____ |
| - Disconnected power cable interface cables. | ____ | ____ |
| - Removed printer cover. | ____ | ____ |
| - Removed drive rod retainers. | ____ | ____ |
| - Removed paper feed assembly. | ____ | ____ |
| - Disconnected drive rod from tractor feed mechanism. | ____ | ____ |
| - Removed platen and drive belt. | ____ | ____ |
| - Checked drive belt and drive gear for serviceability. | ____ | ____ |
| - Checked drive rod for serviceability. | ____ | ____ |
| - Started re-assembly in reverse order of disassembly. | ____ | ____ |
| - Installed paper feed assembly. | ____ | ____ |
| - Installed drive rod retainers. | ____ | ____ |
| - Replaced cover and unit powered-up. | ____ | ____ |
| - Loaded paper into printer. | ____ | ____ |
| - Operated line feed button. | ____ | ____ |

TEST ADMINISTRATORS INFORMATION

DUTY Servicing Computer Equipment

TASK Install paper feed assembly.

ENABLER Remove and replace a paper feed assembly.

Test Environment/Station Set Up:

- Workbench with AC power.
- Computer system with printer.
- Common tool kit.
- Special tools for alignment.

Supplies, Equipment and References needed before test:

- Printer paper.
- Replacement platen, pinch assembly and tractor assembly.
- Reference and technical manuals.

Time allowed to perform test:

- 1.5 time service center time for that make and model.

Special Instructions for Administering the Test:

- Discuss manufacture's cautions with student.
- Use the checklist to evaluate student.

GUIDE SHEET

DUTY: Servicing Computer Equipment

---

PERFORMANCE OBJECTIVE #88

TASK: Install drive indicator light.

STANDARD OF PERFORMANCE OF TASK:

Drive indicator light must light up when the disk drive is in operation.

SOURCE OF STANDARD:

Writing team of incumbent workers.
Handbook of Computer Maintenance and Troubleshooting.

CONDITIONS FOR PERFORMANCE OF TASK:

Disk drive to be serviced
New indicator light
Tool kit

ENABLING OBJECTIVES:

1. Remove and replace defective light bulb and reassemble drive.

*RESOURCES:

1. Disk drive operation/maintenance manual.
2. Schematic of disk drive.
3. Parts list for disk drive.
4. Parts replacement list.
5. Indicator light worksheet.
6. Checklist - Installing drive indicator light.
7. Visual aid - Types of indicator lights.

TEACHING ACTIVITIES:

1. Read and interpret disk drive operation/maintenance manual and schematic of disk drive. (*1 & 2)
2. Present lecture on types of indicator lights and how to replace them. (*2,3,4 & 7)
3. Present lecture on troubleshooting indicator light circuitry. (*2)
4. Read and interpret computer operation manual on boot up & power down procedures. (*1)

TEACHING ACTIVITIES: (cont.)

5. Instruct students to complete the indicator light type worksheet. (*5)
6. Demonstrate how to install drive indicator light (when possible, demonstrate installation of each type of light). (*7)
7. Instruct student to install an indicator light. (*6)

CRITERION-REFERENCED MEASURE:

The student will disassemble disk drive, remove and replace indicator light, reassemble disk drive, and conduct a test run to verify that indicator light is working properly.

PERFORMANCE GUIDE:

1. Power down disk drive and disconnect AC power cord.
2. Remove disk drive cover.
3. Locate indicator bulb and gently push in and turn bulb counterclockwise.
4. Remove indicator bulb/LED from socket connection.
5. Check socket/connection for corrosion and loose connections.
6. Insert new indicator bulb/LED into socket/connection.
7. Gently push bulb in and turn bulb clockwise.
8. Replace disk drive cover.
9. Replace AC power cord and power up disk drive.
10. Load a program and observe if drive indicator is lit during operation.

# LIGHT TYPES

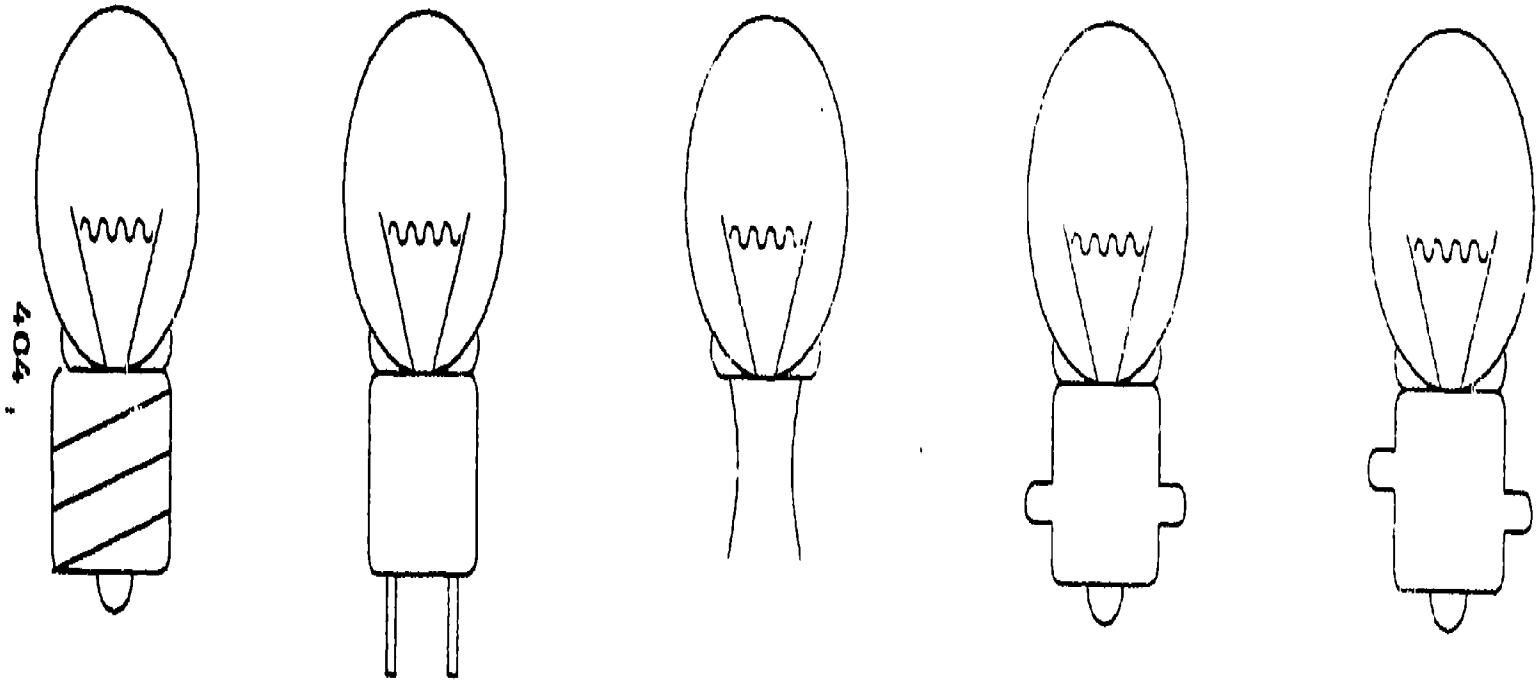

Screw Base | Socket Prong | LED | Bayonet Prong | Off-set Prong

404

# STUDENT WORKSHEET

Student Name _____

Title: Light Type Identification

Directions: Identify the following lights by type.

Worksheet:

1. 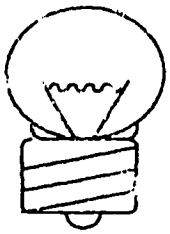

2. 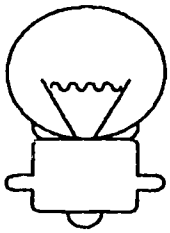

3. 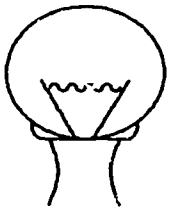

4. 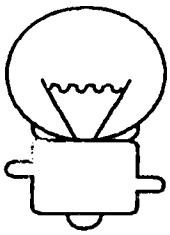

5. 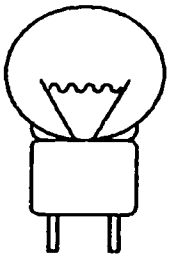

a. Bayonet Prong

b. LED

c. Screw Base

d. Off-set Prong

e. Socket Prong

f. Ground Prong

g. Round Base

STUDENT WORKSHEET ANSWERS

1. c
2. a
3. b
4. d
5. e

CHECKLIST

DUTY Servicing Computer Equipment.

TASK Install indicator light.

ENABLER Disassemble disk drive, remove and replace defective light bulb and reassemble.

STUDENT'S NAME _____ DATE _____

EVALUATOR'S NAME _____ COURSE _____

TIME : STARTED _____ COMPLETED _____

TOTAL _____

DIRECTIONS TO THE EVALUATOR:

Check the appropriate column for each performance determinant.

RECORD THIS INFORMATION:

MANUFACTURER: _____ MODEL: _____

SERIAL #: _____

| PERFORMANCE DETERMINANTS | YES | NO |
|---|---|---|
| The preparer | | |
| - Followed power down procedures. | ____ | ____ |
| - Assembled all needed tools before beginning disassemble. | ____ | ____ |
| - Removed disk drive cover without damage to the retainers. | ____ | ____ |
| - Identified the type of light needed. | ____ | ____ |
| - Removed and replaced lamp without damaging any other components. | ____ | ____ |
| - Reassembled disk drive without damage. | ____ | ____ |
| - Test ran drive after reassembly. | ____ | ____ |
| - Worked indicator light. | ____ | ____ |
| - Used reference manuals. | ____ | ____ |
| - Completed task in the allowed time frame. | ____ | ____ |
| - Checked for corrosion and loose socket/ connections. | ____ | ____ |

GUIDE SHEET

DUTY: Servicing Computer Equipment

---

PERFORMANCE OBJECTIVE #89

TASK: Install peripheral connection cables.

STANDARD OF PERFORMANCE OF TASK:

Peripheral connection cables between peripheral equipment and the main central processing unit must be functional, allowing the equipment to function as one system.

SOURCE OF STANDARD:

Writing team of incumbent workers.
Handbook of Computer Maintenance and Troubleshooting.
How to Maintain and Service Your Small Computer.

CONDITIONS FOR PERFORMANCE OF TASK:

Peripheral equipment to be connected
Peripheral connection cables
Flatblade screwdriver

ENABLING OBJECTIVES:

1. Connect peripheral connection cables between peripheral equipment and central processing unit, allowing the equipment to function as one system.

*RESOURCES:

1. Operation/maintenance manuals.
2. Art Margolis. Computer Technician's Handbook, Second Edition. Tab Books Inc., Blue Ridge Summit, PA. 1985.
3. Stephenson and Cahill. How to Maintain and Service Your Small Computer. Howard W. Sams and Co., Inc., Indianapolis, IN. 1983.
4. Visual aid - Types of peripheral connection cables.
5. Checklist - Install peripheral cables.

TEACHING ACTIVITIES:

1. Demonstrate power down procedure. (Be sure student is aware of possible shock if peripherals have power) (*1)
2. Present lecture on peripherals and cables. (*1 & 2)

TEACHING ACTIVITIES: (cont.)

3. Present lecture on proper connection procedures. (#1 & 2)
4. Present lecture on proper booting sequence and peripheral operation. (#1)
5. Conduct discussion on different types of peripheral connections. (#1,2,3, & 5)
6. Demonstrate how to connect different peripheral connection cables. (#5)
7. Instruct student to install peripheral connection cables. (#4)

CRITERION-REFERENCED MEASURE:

The student will install peripheral connection cables between periheral equipment and main central processing unit, allowing the equipment to function as one system.

PERFORMANCE GUIDE:

1. Obtain equipment to be connected together and check that the power to each is disconnected.
2. Determine the type of cable connection that is needed:
   A. Pin connection.
   B. Edge-card connection.
3. Locate the proper port and gently push the cable connector in.
   NOTE: If resistance is felt, remove the connector from the port and check that the connector is right side up. Usually, the connector will have a groove or special shape which corresponds to the connection port on the equipment.
4. Gently snap the cable connector retaining latches in place.
5. Power up the system and check if installed peripherals power up and operate.

# TYPES OF PERIPHERAL CONNECTION CABLES

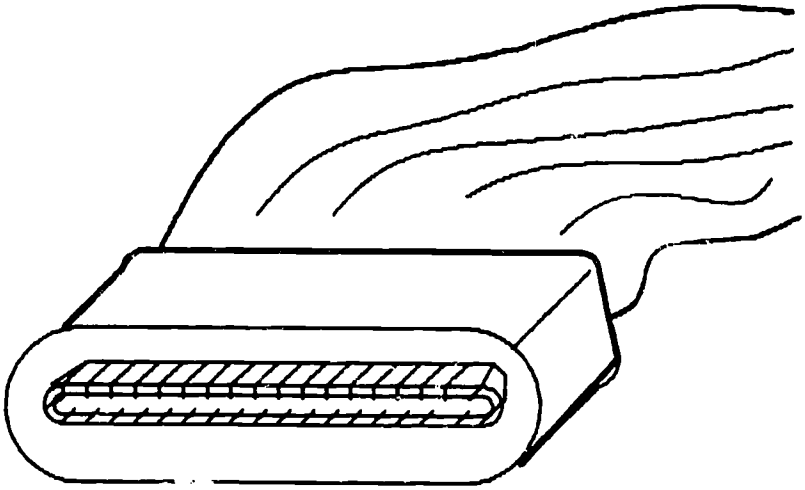

Parallel Plug-in
With Ribbon Cable

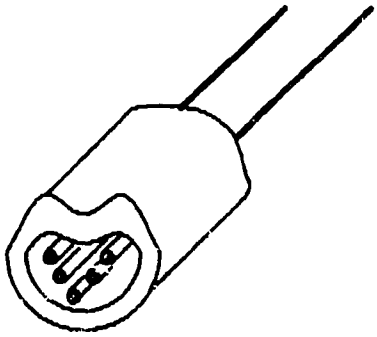

Pin Plug-in
With Round Cable

Jack Plug-in
With Round Cable

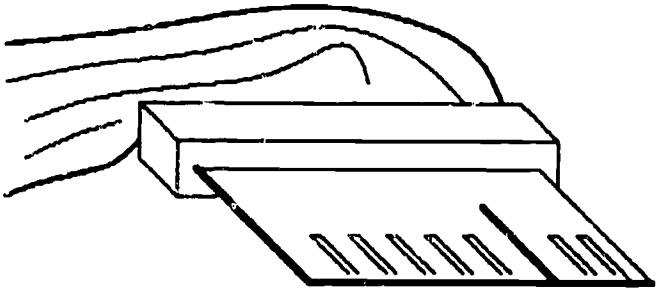

Card Plug-in
With Ribbon Cable

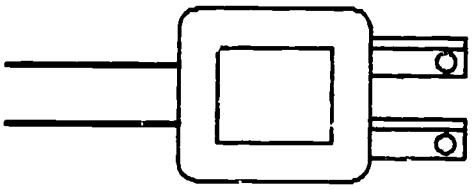

Common Two
Pronged Plug

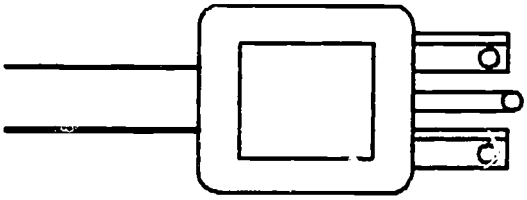

Common Three
Pronged Plug

# JACKS AND PLUGS

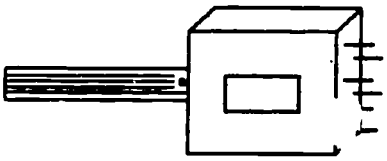

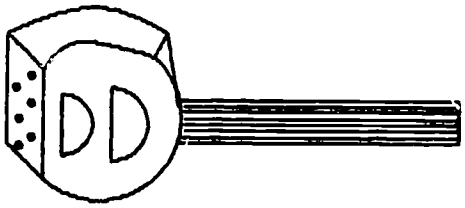


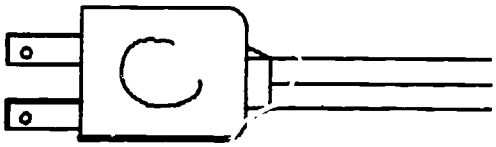


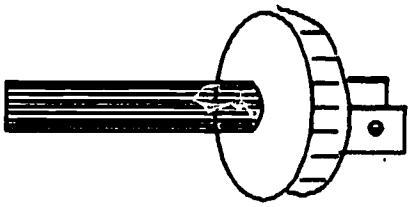

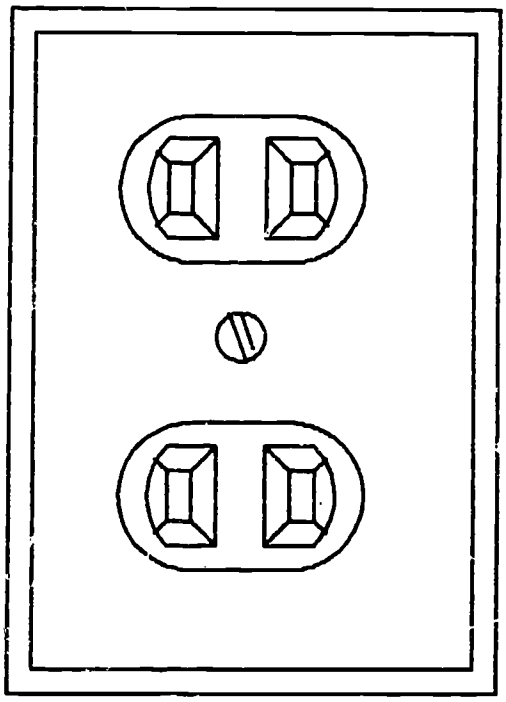

CHECKLIST

DUTY Servicing Computer Equipment.

TASK Install peripheral connection cables.

ENABLER Connect peripheral connection cables between peripheral equipment and central processing unit, allowing the equipment to function as one system.

STUDENT'S NAME _____ DATE _____

EVALUATOR'S NAME _____ COURSE _____

TIME : STARTED _____ COMPLETED _____

TOTAL _____

DIRECTIONS TO THE EVALUATOR:

Use the following checklist to evaluate student performance while installing peripheral cables.

RECORD THIS INFORMATION:

MANUFACTURER: _____ MODEL: _____

SERIAL #: _____

| PERFORMANCE DETERMINANTS | YES | NO |
|---|---|---|
| The preparer | | |
| - Identified type of peripheral connection. | ____ | ____ |
| - Followed power down procedure. | ____ | ____ |
| - Selected correct cable. | ____ | ____ |
| - Selected proper port on CPU. | ____ | ____ |
| - Connected cable in a safe manner assuming no damage. | ____ | ____ |
| - Used proper tools. | ____ | ____ |
| - Made sure all connected peripherals functioned properly. | ____ | ____ |
| - Readied the system to function properly. | ____ | ____ |

GUIDE SHEET

DUTY: Servicing Computer Equipment

---

PERFORMANCE OBJECTIVE [illegible]

TASK: Install peripheral connectors.

STANDARD OF PERFORMANCE OF TASK:

Worn peripheral cable connection port must be exchanged so that peripheral cable connectors fit snug and provide a good connection with the connection port.

SOURCE OF STANDARD

Writing team of incumbent workers.
Handbook of Computer Maintenance and Troubleshooting.
How to Maintain and Service Your Small Computer.

CONDITIONS FOR PERFORMANCE OF TASK:

Equipment to be serviced
Tool kit
Peripheral connection ports
Soldering tool
Solder sucker or wick
Solder

ENABLING OBJECTIVES:

1. Disassemble unit, remove and replace worn peripheral connection ports, and reassemble unit.

*RESOURCES:

1. Operation/maintenance manuals for unit.
2. Art Margolis. Computer Technician's Handbook, Second Edition. [illegible]ab Books Inc., Blue Ridge Summit, PA. 1985.
3. Bryon Maguire. Handbook of Maintenance and Troubleshooting. Reston Publishing Company, Reston, VA. 1973.
4. PACE soldering units. (any electronics book on soldering)
5. Visual aid - Peripheral connections.
6. Checklist - Installing peripheral connections.

TEACHING ACTIVITIES:

1. Read and interpret unit operator's manual. (*1 & 2)
2. Present lecture on types of peripheral connectors. (*1,2,& 6)
3. Present lecture on soldering techniques. (*3)
4. Present lecture on importance of good connections. (*1,2 & 3)
5. Conduct class discussion on ways of replacing connections. (*1 & 2)
6. Conduct class discussion on safety in handling components. (*1 & 2)
7. Demonstrate how to replace a plug-in connection. (*1 & 2)
8. Demonstrate how to replace a soldered peripheral connection. (*1,2 & 3)
9. Instruct student to replace a peripheral connection port. (*5)

CRITERION-REFERENCED MEASURE:

After identifying loose fitting connections, the student will remove and replace peripheral connection ports, reassemble

PERFORMANCE GUIDE:

1. Power down equipment and disconnect AC power cord and peripheral cables.
2. Remove cover.
3. Locate connection port to be replaced.
4. Determine how part is connected and disconnect it:
   A. Plug-in connection:
      1. Grasp connection port firmly on outer edges and unplug connection port.
      2. Remove connection port from the equipment.
   B. Soldered connection:
      1. Desolder the connection and remove the melted solder with a solder sucker or wick.
      2. Once all solder is removed, gently move the connector to insure it is free.
      3. Remove connection port from the equipment.
5. Replace the connection port:
   A. Plug-in connection:
      1. Insert connection port into place.
      2. Gently push connection port into socket.
   B. Soldered connection:
      1. Place connection port into position and make sure it is aligned properly.
      2. Resolder connections taking care not to get solder on other parts.
      3. Allow solder to dry and then check that soldered connections are secure.
6. Replace cover and peripheral cables.
7. Reconnect AC power cord and power up system.
8. Test run peripheral equipment to check that connection ports are functioning properly.

# Peripheral Connection

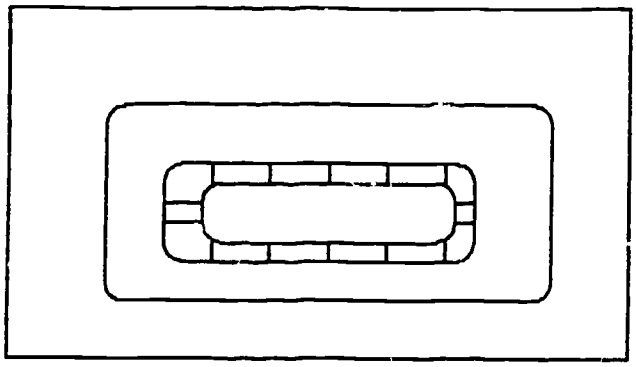

Parallel Plug-in Connection

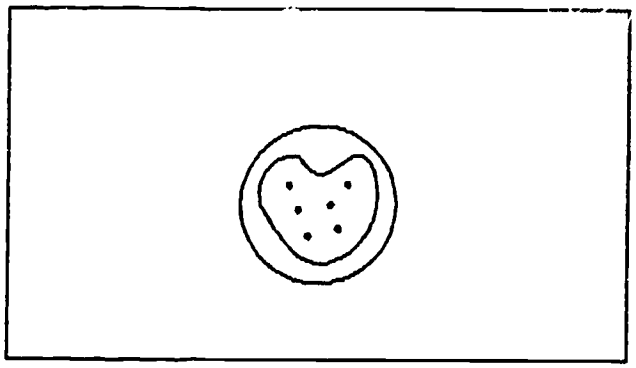

Pin Plug-in Connection

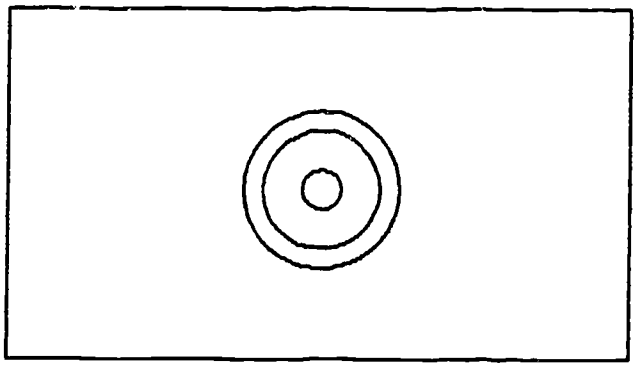

Plug-in Jack Connection

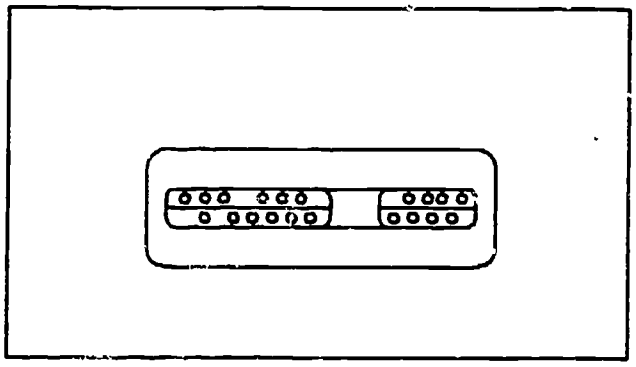

Card Plug-in Connection

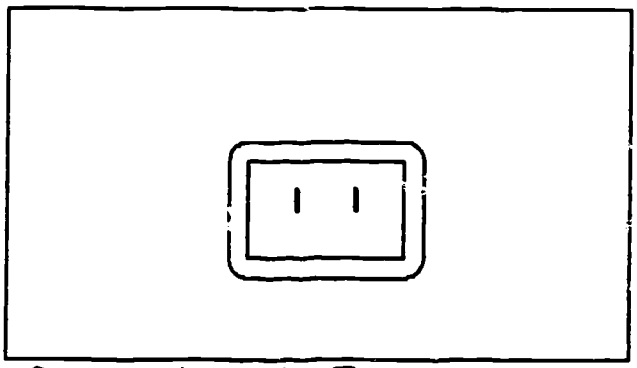

Standard Two Pronged Plug Connection

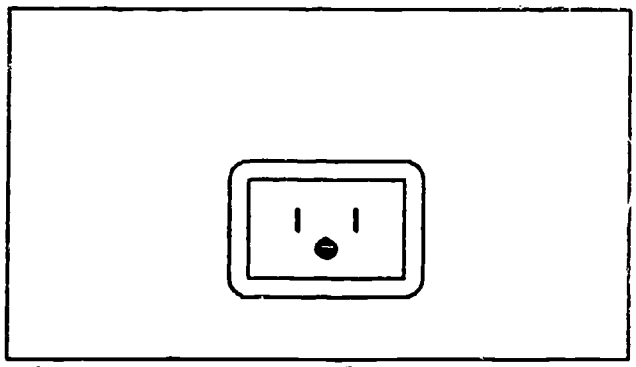

Grounded Three Pronged Plug Connection

CHECKLIST

DUTY Servicing Computer Equipment.

TASK Install peripheral connections.

ENABLER Disassemble unit, remove and replace worn peripheral connectors, reassemble unit.

STUDENT'S NAME _____ DATE _____

EVALUATOR'S NAME _____ COURSE _____

TIME : STARTED _____ COMPLETED _____

TOTAL _____

DIRECTIONS TO THE EVALUATOR:

Use the following checklist to evaluate student performance when installing peripheral connections.

RECORD THIS INFORMATION:

MANUFACTURER: _____ MODEL: _____

SERIAL #: _____

| PERFORMANCE DETERMINANTS | YES | NO |
|---|---|---|
| The preparer | | |
| - Used correct procedures in power down. | ____ | ____ |
| - Used correct procedure and tools to remove cover and locate connection port to be removed. | ____ | ____ |
| - Properly disconnected part. | ____ | ____ |
| - Used proper desoldering techniques (if necessary). | ____ | ____ |
| - Gently removed connector (not forced). | ____ | ____ |
| - Replaced proper connection port. | ____ | ____ |
| - Used proper soldering technique. | ____ | ____ |
| - Properly reconnected all parts and connections. | ____ | ____ |
| - Ran successful tests on peripherals. | ____ | ____ |

GUIDE SHEET

DUTY: Servicing Computer Equipment

---

PERFORMANCE OBJECTIVE #91

TASK: Install circuit/language cards.

STANDARD OF PERFORMANCE OF TASK:

Circuit/language card must be exchanged to correct a programming/operation problem or to change the language.

SOURCE OF STANDARD:

Writing team of incumbent workers.

CONDITIONS FOR PERFORMANCE OF TASK:

Equipment to be serviced
Tool kit
Circuit/language card

ENABLING OBJECTIVES:

1. Remove and replace circuit/language card to correct a programming/operation problem or to change language to be used.

*RESOURCES:

1. System operation/maintenance manual.
2. Placement chart for boards.
3. Art Margolis. Computer Technicians Handbook, Second Edition. Tab Books Inc., Blue Ridge Summit, PA. 1985.
4. Visual aid - Circuit/language card.
5. Checklist - For installing circuit/language card.

TEACHING ACTIVITIES:

1. Read and interpret card replacement information. (*1 & 2)
2. Present lecture on circuit/language card functions and placement. (*1,2 & 4)
3. Present lecture on system power down and disconnecting procedures. (*1 & 3)

TEACHING ACTIVITIES: (cont.)

4. Demonstrate power down and disconnection procedures.
5. Present lecture on handling and installation of circuit/language cards. (#1,2 & 3)
6. Demonstrate circuit/language card handling and installation procedures. (#4)
7. Present lecture on booting system and system check. (#1 & 3)
8. Demonstrate booting system and system check procedures.
9. Instruct student to power down system, install a circuit/language card, boot system, and conduct system check. (#5)

CRITERION-REFERENCED MEASURE:

The student will disassemble unit, replace card, reassemble unit, and perform a check to be certain installation is complete and correct.

PERFORMANCE GUIDE:

1. Power down system and disconnect peripheral cables.
2. Remove cover.
3. Mark and remove any cables connected to the card.
4. Grasp the upper edges of card gently and pull it out of its socket.
5. Insert new circuit/language card into socket.
6. Press gently on the upper outer edges of the card, push it into the socket.
7. Reconnect cables to the card.
8. Replace the cover.
9. Reconnect peripheral cables and power up system.
10. Conduct a check on the system to insure that the cards are functioning correctly.

CHECKLIST

DUTY Servicing Computer Equipment.

TASK Install circuit/language cards.

ENABLER Remove and replace language/circuit card to correct a programming/operation problem or to change the language.

STUDENT'S NAME _____ DATE _____

EVALUATOR'S NAME _____ COURSE _____

TIME : STARTED _____ COMPLETED _____

TOTAL _____

DIRECTIONS TO THE EVALUATOR:

Use checklist to evaluate student performance when installing circuit language cards.

RECORD THIS INFORMATION:

MANUFACTURER: _____ MODEL: _____

SERIAL #: _____

| PERFORMANCE DETERMINANTS | YES | NO |
|---|---|---|
| The preparer | | |
| - Properly shut down the system and disconnected all peripherals. | ____ | ____ |
| - Removed unit cover properly. | ____ | ____ |
| - Marked cables and connections to card. | ____ | ____ |
| - Removed card and replaced with new card. | ____ | ____ |
| - Connected all cables and connections. | ____ | ____ |
| - Replaced covers and connected peripheral cables. | ____ | ____ |
| - Powered system and completed performance check. | ____ | ____ |

GUIDE SHEET

DUTY: Servicing Computer Equipment

---

PERFORMANCE OBJECTIVE #92

TASK: Install modem coupler.

STANDARD OF PERFORMANCE OF TASK:

Modem coupler to computer must allow information to be sent and received via a telephone line.

SOURCE OF STANDARD:

Writing team of incumbent workers.
How to Maintain and Service Your Small Computer.

CONDITIONS FOR PERFORMANCE OF TASK:

Equipment to be serviced
Modem coupler
Modem cables
Telephone/telephone jack

ENABLING OBJECTIVES:

1. Install modem coupler to computer to allow information to be sent and received via telephone hook-up.

*RESOURCES:

1. Installation/maintenance manual for modem.
2. Art Margolis. Computer Technicians Handbook, Second Edition. Tab Books Inc., Blue Ridge Summit, PA. 1985.
3. Stephenson and Cahill. How to Maintain and Service Your Small Computer. Howard W. Sams & Co. Inc., Indianapolis, IN. 1983.
4. Modem installation checklist.
5. Visual aids with types of modems.
6. Checklist - Coupler installation.

TEACHING ACTIVITIES:

1. Read and interpret installation/maintenance manual on modem. (*1)
2. Present lecture on modems internal workings. (*1,2,3 & 5)
3. Present lecture on testing procedures. (*1,2 & 3)

TEACHING ACTIVITIES: (cont.)

4. Present lecture on different types of modems. (#2,3 & 5)
5. Demonstrate different types of modems and the testing procedure for each.
6. Present lecture on proper installation of modem connectors and jacks. (#1,2 & 3)
7. Demonstrate installation of modem connectors and jacks.
8. Instruct student to install a modem coupler to a computer, and test transfer of information. (#4)

CRITERION-REFERENCED MEASURE:

The student will install modem into system, and check system for proper system operation.

PERFORMANCE GUIDE:

1. Power down the system
2. Connect the modem connector cable into the proper connection port on the control unit (mainframe, data processor, microcomputer) and the modem.
3. Conduct modem echo test or self-test to determine if modem is transmitting and receiving correctly.
4. Connect the modem with the telephone line:
   A. Acoustic type modem:
      1. Turn on power to modem.
      2. Set operation mode on half-duplex mode if you wish only to transmit.
   B. Direct-connect modem:
      1. Connect phone jack to modem.
      2. Load and run software for control of modem.

# ACOUSTIC TYPE MODEM

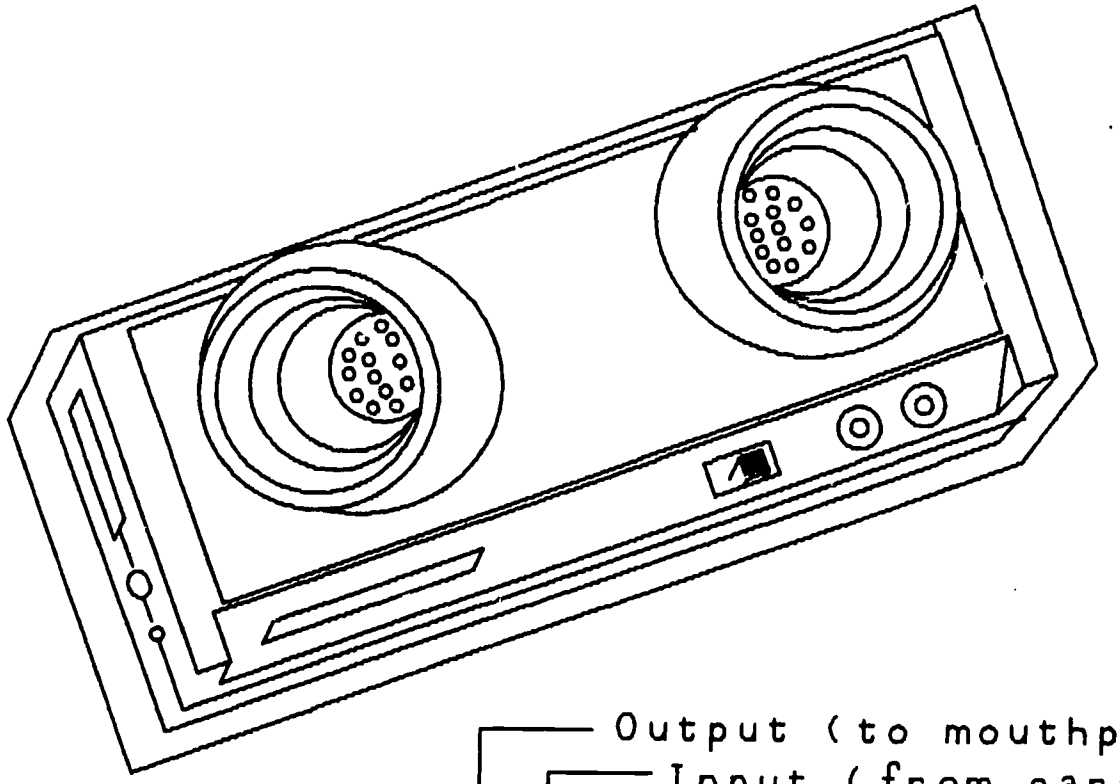

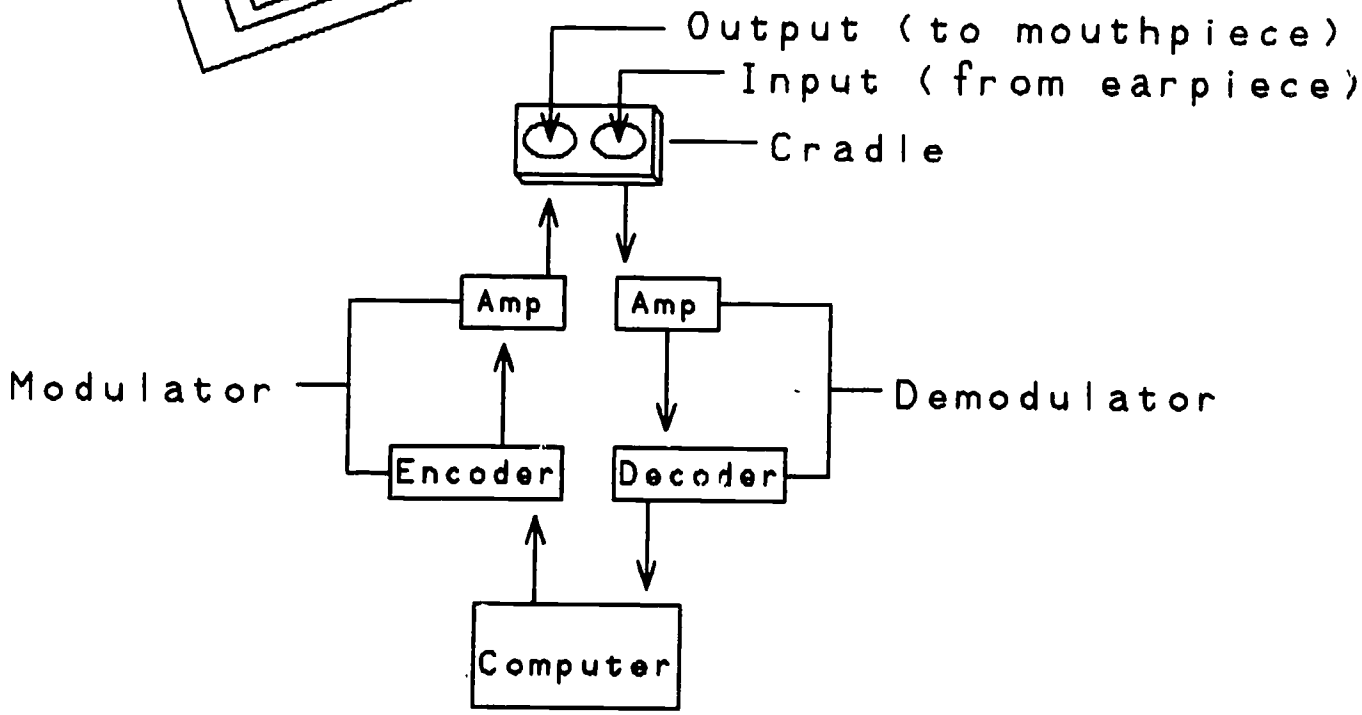

CHECKLIST

DUTY Servicing Computer Equipment.

TASK Install modem coupler.

ENABLER Modem coupler to computer must be installed.

STUDENT'S NAME _____ DATE _____

EVALUATOR'S NAME _____ COURSE _____

TIME : STARTED _____ COMPLETED _____

TOTAL _____

DIRECTIONS TO THE EVALUATOR:

Use checklist to evaluate student performance when installing modem coupler.

RECORD THIS INFORMATION:

MANUFACTURER: _____ MODEL: _____

SERIAL #: _____

| PERFORMANCE DETERMINANTS | YES | NO |
|---|---|---|
| The preparer | | |
| - Followed power down procedure. | ____ | ____ |
| - Made connections between system and modem. | ____ | ____ |
| - Connected telephone line. | ____ | ____ |
| - Completed installation and readied system for check. | ____ | ____ |
| - Completed power check. | ____ | ____ |
| - Followed power down procedures. | ____ | ____ |

DUTY: Servicing Computer Equipment

---

PERFORMANCE OBJECTIVE #93

TASK: Install tape transport assembly.

STANDARD OF PERFORMANCE OF TASK:

Tape transport assembly must be exchanged so that the tape can be fed through the tape player/recorder without stretching, tangling, or binding in the transport assembly.

SOURCE OF STANDARD:

Writing team of incumbent workers.
How to Maintain and Service Your Small Computer.

CONDITIONS FOR PERFORMANCE OF TASK:

Tape player/recorder to be serviced
Tape transport assembly
Tool kit

ENABLING OBJECTIVES:

1. Remove and replace tape transport assembly.
2. Identify internal parts of tape transport.

*RESOURCES:

1. Stephenson and Cahill. How to Maintain and Service Your Small Computer. Howard W. Sams & Co. Inc., Indianapolis, IN. 1983.
2. Installation operation/maintenance manual for tape transport.
3. Visual aid - Tape transport.
4. Checklist - Tape transport.
5. Tape transport parts identification worksheets.

TEACHING ACTIVITIES:

1. Read and interpret manuals on tape transport system. (*2)
2. Present lecture on operation of tape transport. (*1,2 & 3)
3. Instruct student to complete tape transport parts identification worksheets. (*5)

TEACHING ACTIVITIES: (cont.)

4. Present lecture on schematic of tape transport. (*2)
5. Demonstrate installation of tape transport.
6. Present lecture on testing procedure for tape transport. (*1 & 2)
7. Conduct class discussion on operation and testing procedures for tape transport.
8. Demonstrate testing procedures for tape transport.
9. Instruct student to install and test a tape transport system.

CRITERION-REFERENCED MEASURE:

The student will dissasemble unit, replace tape transport system, reassemble unit, and perform operational check on system.

PERFORMANCE GUIDE:

1. Power down system and disconnect tape player/recorder cable from control unit.
2. Remove cover.
3. Remove tape transport assembly retaining screws.
4. Gently lift tape transport assembly from base.
5. Replace tape transport assembly on base and replace retaining screws.
6. Replace cover.
7. Reconnect tape player/recorder cable to control unit and power up system.
8. Insert and play a tape and observe if tape transport assembly is functioning correctly.

TAPE TRANSPORT

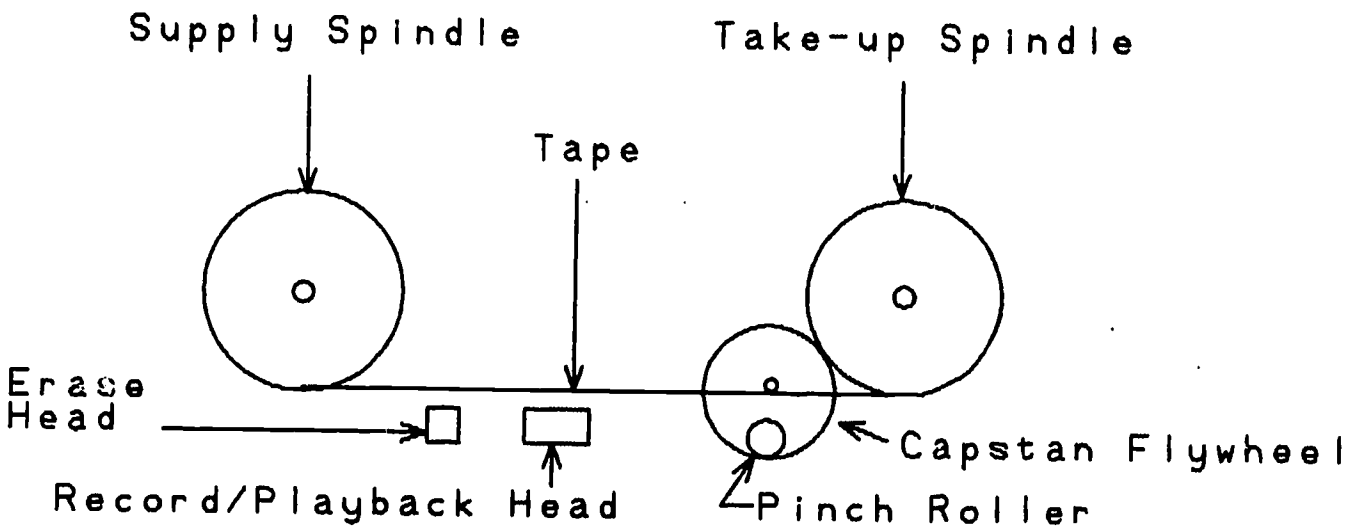

CHECKLIST

DUTY Servicing Computer Equipment.

TASK Install tape transport assembly.

ENABLER Remove and replace tape transport assembly.

STUDENT'S NAME _____ DATE _____

EVALUATOR'S NAME _____ COURSE _____

TIME : STARTED _____ COMPLETED _____

TOTAL _____

DIRECTIONS TO THE EVALUATOR:

Use checklist to evaluate student performance when installing tape transport.

RECORD THIS INFORMATION:

MANUFACTURER: _____ MODEL: _____

SERIAL #: _____

| PERFORMANCE DETERMINANTS | YES | NO |
|---|---|---|
| The preparer | | |
| - Followed power down procedure. | ___ | ___ |
| - Disconnected peripheral cables. | ___ | ___ |
| - Removed retaining screws without damaging unit. | ___ | ___ |
| - Removed tape transport without damaging unit. | ___ | ___ |
| - Replaced tape transport without damaging unit. | ___ | ___ |
| - Reassembled tape player/recorder properly. | ___ | ___ |
| - Reconnected all peripheral cables | ___ | ___ |
| - Tested tape transport system | ___ | ___ |
| - Prepared tape transport system to pass test. | ___ | ___ |

GUIDE SHEET

DUTY: Servicing Computer Equipment

---

PERFORMANCE OBJECTIVE #94

TASK: Install read/write/verify head.

STANDARD OF PERFORMANCE OF TASK:

Read/write/verify head must be exchanged so that data may be stored, recalled, and verified.

SOURCE OF STANDARD:

Writing team of incumbent workers.
How to Maintain and Service Your Small Computer.

CONDITIONS FOR PERFORMANCE OF TASK:

Tape player/recorder to be serviced
Read/write/verify head
Tool kit

ENABLING OBJECTIVES:

1. Disassemble system, remove and replace read/write/verify head and reassemble system.
2. Perform check to insure read/write/verify head is operational.

*RESOURCES:

1. Installation/operational maintenance manual.
2. Art Margolis. Computer Technicians Handbook, Second Edition. Tab Books, Inc., Blue Ridge Summit, PA. 1985.
3. Stephenson and Cahill. How to Maintain and Service Your Small Computer. Howard W. Sams & Co. Inc., Indianapolis, IN. 1983.
4. Visual aid - Of read/write/verify head.
5. Checklist - Read/write/verify head installation.

TEACHING ACTIVITIES:

1. Read and interpret read/write/verify head installation manual. (*1)
2. Present lecture on read/write/verify head operation. (*2 & 3)

TEACHING ACTIVITIES: (cont.)

3. Present lecture on purpose/function of read/write/verify head. (#2)
4. Conduct class discussion on purpose, operation, and safety concerning read/write/verify head. (#1 & 2)
5. Present lecture on schematic of read/write/verify head. (#1)
6. Present lecture on installation of read/write/verify head. (#1,2 & 3)
7. Present lecture on check out procedure for the system. (#1)
8. Demonstrate how to install a read/write/verify head. (#1,2,3 & 4)
9. Demonstrate system check out/test procedure. (#1)
10. Instruct student to install and test a read/write/verify head. (#5)

CRITERION-REFERENCED MEASURE:

The student will dissasemble unit, remove and replace read/write/verify head, reassemble unit and then perform the proper check out procedures.

PERFORMANCE GUIDE:

1. Power down system and unplug connection cable from main power unit.
2. Remove cover.
3. Remove retaining screws and lift tape transport assembly from base.
4. Remove head retaining screws and gently lift head from assembly.
5. Mark and disconnect lead wires from head.
6. Remove head from assembly.
7. Connect lead wires to tape head.
8. Place head on tape transport assembly and replace retaining screws.
9. Place tape transport assembly back on base and replace retaining screws.
10. Replace cover.
11. Reconnect connection cable to control unit and power up.
12. Store, verify and load data to check if head is working properly.

# TAPE HEAD REMOVAL/INSTALLATION

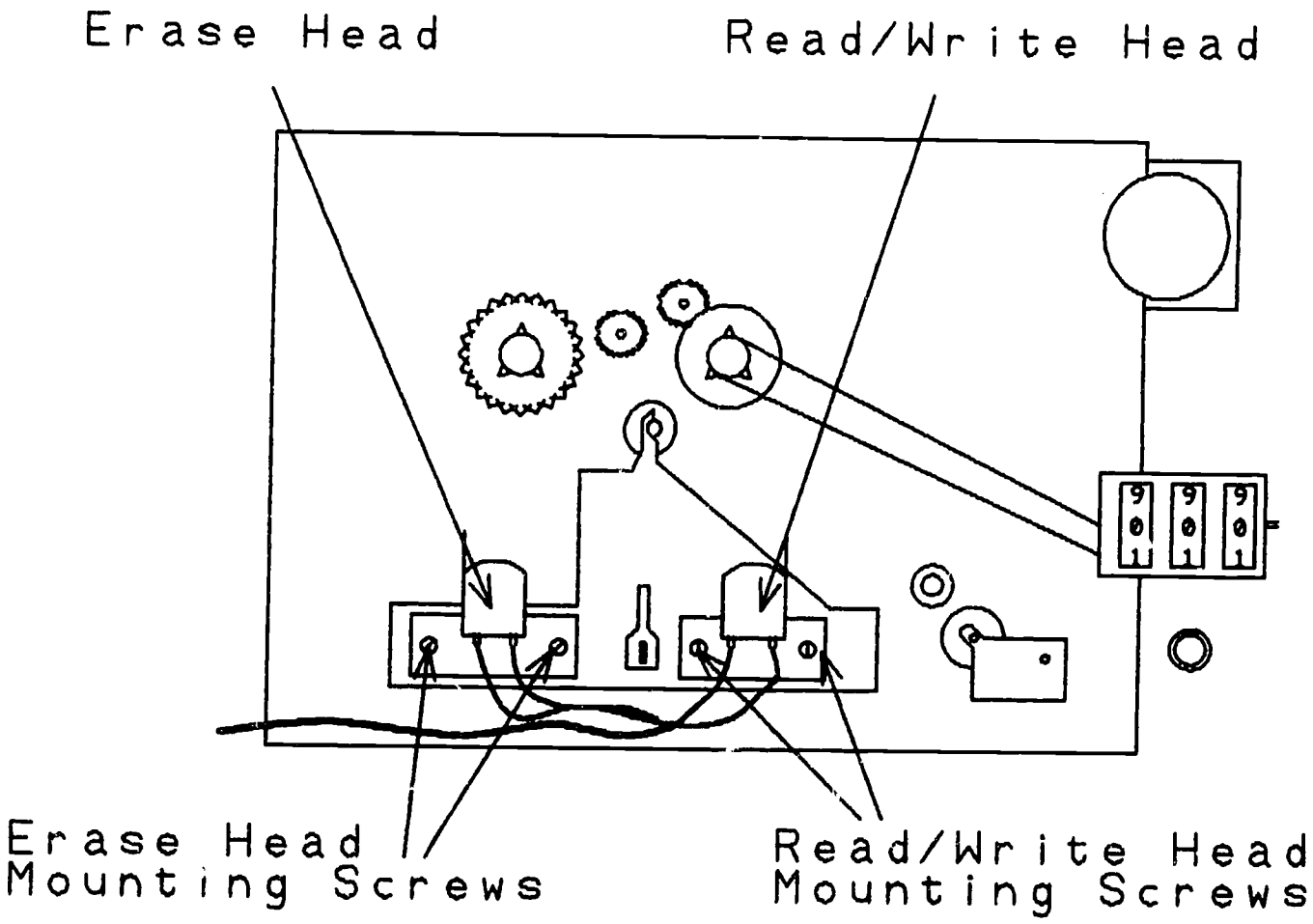

CHECKLIST

DUTY Servicing computer equipment.

TASK Install read/write/verify head.

ENABLER Disassemble system, remove and replace read/write/verify head, reassemble system and perform check out procedure.

STUDENT'S NAME _____ DATE _____

EVALUATOR'S NAME _____ COURSE _____

TIME : STARTED _____ COMPLETED _____

TOTAL _____

DIRECTIONS TO THE EVALUATOR:

Use checklist to evaluate student performance when installing read/write/verify head.

RECORD THIS INFORMATION:
MANUFACTURER:_____MODEL:_____
SERIAL #:_____

| PERFORMANCE DETERMINANTS | YES | NO |
|---|---|---|
| The preparer | | |
| - Powered down system and disconnected peripheral cables. | ____ | ____ |
| - Disassembled unit without damage. | ____ | ____ |
| - Removed retaining screws from transport assembly without damaging unit? | ____ | ____ |
| - Removed transport assembly from unit. | ____ | ____ |
| - Removed retaining screws from head assembly. | ____ | ____ |
| - Marked lead wires before disconnecting from head assembly. | ____ | ____ |
| - Removed and replaced head assembly. | ____ | ____ |
| - Reconnected lead wires to new head. | ____ | ____ |
| - Replaced head assembly retaining screws. | ____ | ____ |
| - Reassembled unit without damage. | ____ | ____ |
| - Reconnected all peripheral cables. | ____ | ____ |

GUIDE SHEET

DUTY: Servicing Computer Equipment

---

PERFORMANCE OBJECTIVE #95

TASK: Install modem set switch.

STANDARD OF PERFORMANCE OF TASK:

Modem set switch installed must be exchanged to enable the half- duplex and duplex modes to be used.

SOURCE OF STANDARD:

Writing team of incumbent workers.
How to Maintain and Service Your Small Computer.

CONDITION PERFORMANCE OF TASK:

Modem to be serviced
Set switch
Tool kit

ENABLING OBJECTIVES:

1. Disassemble modem, remove and replace modem set switch, reassemble modem and conduct operational check test.

*RESOURCES:

1. Installation/operational maintenance manuals.
2. Art Margolis. Computer Technicians Handbook, Second Edition. Tab Books, Inc., Blue Ridge Summit, PA. 1985.
3. Stephenson and Cahill. How to Maintain and Service Your Small Computer. Howard W. Sams & Co. Inc., Indianapolis, IN. 1983.
4. Visual aid - Modem switch location.
5. Checklist - Installing modem set switch.

TEACHING ACTIVITIES:

1. Read and interpret operational manual for schematics. (*1)
2. Present lecture on operation of modem set switch. (*1,2 & 3)

TEACHING ACTIVITIES: (cont.)

3. Demonstrate the operation of modem set switch.
4. Present lecture on assembly and disassembly of modem. (*1,2 & 3)
5. Demonstrate assembly and disassembly of a modem.
6. Conduct class discussion on modem operation in both modes (half duplex and duplex). (*1)
7. Present lecture on procedure for removing and replacing set switch.
8. Demonstrate procedure for removing and replacing a modem set switch.
9. Instruct student to remove and replace a modem set switch. (*4)

CRITERION-REFERENCED MEASURE:

The student will disassemble modem, remove and replace modem set switch, reassemble modem, and perform operational check test.

PERFORMANCE GUIDE:

1. Power down system and disconnect modem from control unit and telephone line.
2. Remove cover.
3. Mark lead wires and disconnect them from the set switch.
4. Remove the set switch retaining screws and lift switch from modem.
5. Replace the lead wires back on the switch leads.
6. Place the set switch back into place on the modem and replace retaining screws.
7. Replace cover.
8. Reconnect modem to control unit and telephone line.
9. Power up system, send and receive information in both modes to check if switch is functioning properly.

# DIRECT-CONNECT MODEM

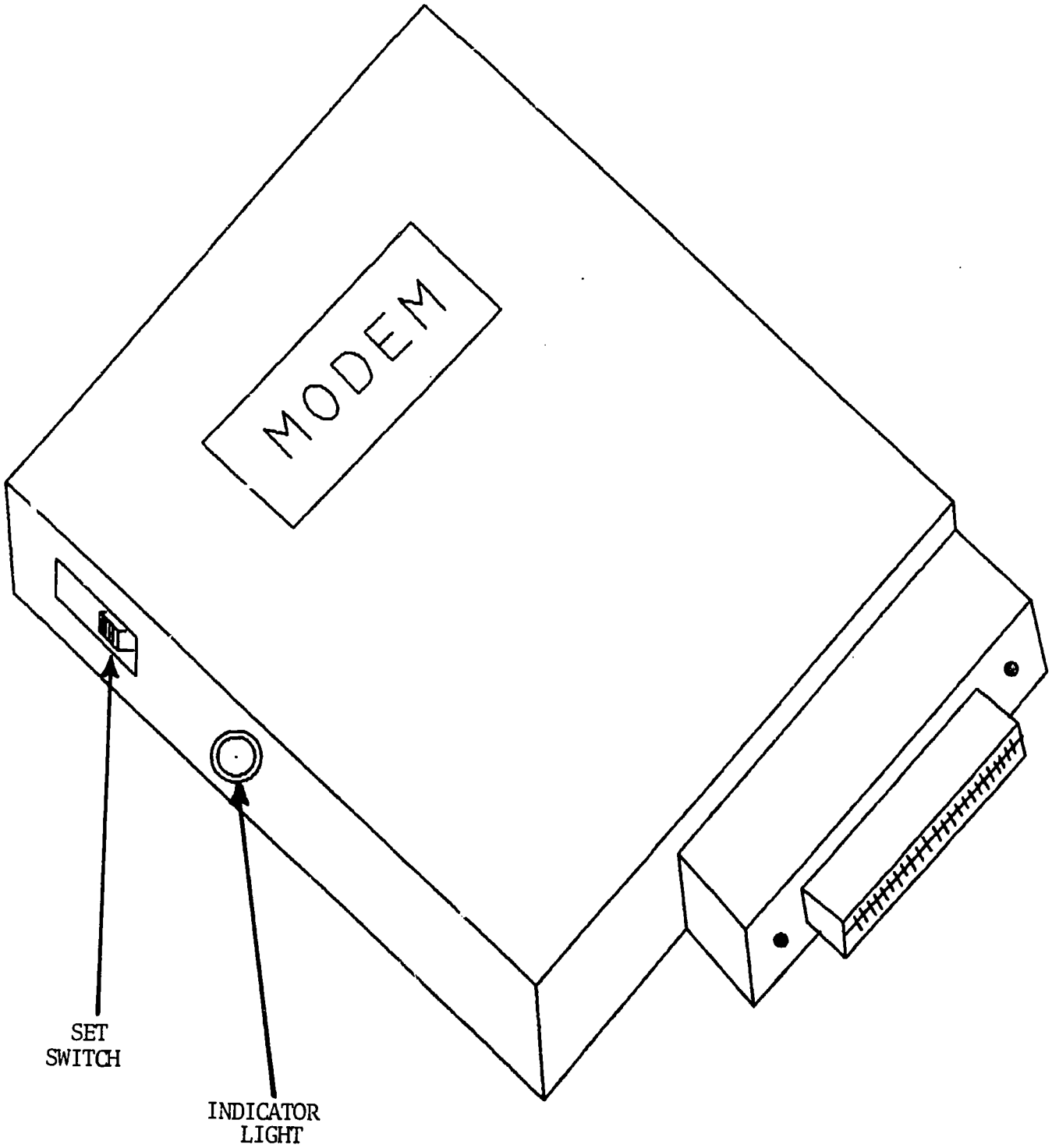

CHECKLIST

DUTY Servicing Computer Equipment.

TASK Install modem set switch.

ENABLER Disassemble modem, remove and replace modem set switch, reassemble modem, and conduct an operational check test.

STUDENT'S NAME _____ DATE _____

EVALUATOR'S NAME _____ COURSE _____

TIME : STARTED _____ COMPLETED _____

TOTAL _____

DIRECTIONS TO THE EVALUATOR:

Use checklist to evaluate student performance when installing modem set switch.

RECORD THIS INFORMATION:

MANUFACTURER: _____ MODEL: _____
SERIAL #: _____

| PERFORMANCE DETERMINANTS | YES | NO |
|---|---|---|
| The preparer | | |
| - Followed power down procedure. | ____ | ____ |
| - Removed modem from control unit and telephone line. | ____ | ____ |
| - Disassembled modem. | ____ | ____ |
| - Marked leads before removing from set switch. | ____ | ____ |
| - Properly removed switch. | ____ | ____ |
| - Properly installed switch leads before reinstalling switch. | ____ | ____ |
| - Reassembled modem. | ____ | ____ |
| - Reconnected modem to central unit and telephone line. | ____ | ____ |
| - Powered up and performed operational check. | ____ | ____ |
| - Readied system to send and receive information. | ____ | ____ |

GUIDE SHEET

DUTY: Servicing Computer Equipment

---

PERFORMANCE OBJECTIVE #96

TASK: Install ribbon assembly.

STANDARD OF PERFORMANCE OF TASK:

Printer ribbon assembly installed must provide a darker, clearer and more readable printed character.

SOURCE OF STANDARD:

Writing team of incumbent workers.
How to Maintain and Service Your Small Computer.

CONDITIONS FOR PERFORMANCE OF TASK:

Printer to be serviced
Ribbon assembly

ENABLING OBJECTIVES:

1. Remove and replace ribbon assembly.
2. Identify parts of cartridge and ribbon holders.

*RESOURCES:

1. Installation/operational maintenance manuals for printer.
2. Stephenson and Cahill. How to Maintain and Service Your Small Computer. Howard W. Sams & Co. Inc., Indianapolis, IN. 1983.
3. Visual aid - Ribbon assemblies.
4. Checklist - Installing ribbon assembly.

TEACHING ACTIVITIES:

1. Read and interpret ribbon assembly replacement procedures. (*1)
2. Present lecture on ribbon assembly replacement procedures. (*1,2 & 3)
3. Demonstrate procedure for installing ribbon assembly. (*1,2 & 3)
4. Present lecture on parts of ribbon assembly. (*1,2 & 3)

TEACHING ACTIVITIES: (cont.)

5. Demonstrate parts of ribbon assembly. (#3)
6. Instruct student to install a ribbon assembly. (#4)

CRITERION-REFERENCED MEASURE:

The student will change ribbon cartridge and check installation by performing a performance check.

PERFORMANCE GUIDE:

1. Move head adjustment gently towards the front of the printer as far as possible.
2. Tighten the ribbon using the tightening knob on assembly.
3. Push the right assembly retaining latch out and lift up the right side of the assembly.
4. Push the left retaining latch out and lift ribbon assembly up and out.
5. Tighten the ribbon of the new assembly and slide the ribbon between the print mechanism and the platen.
6. Press down on the left side of the ribbon assembly until the retaining latch clicks into place.
7. Press down on the right side of assembly while slowly turning the adjustment knob until the right side of the assembly clicks into place.
8. Tighten ribbon and set print mechanism back to original position.

# TYPES OF RIBBON ASSEMBLIES

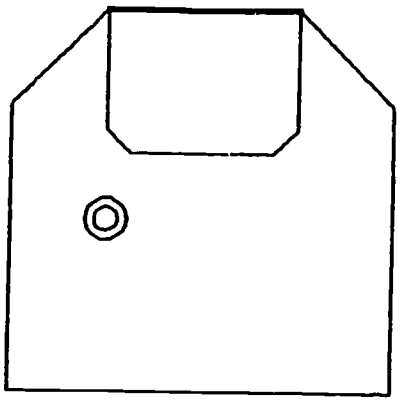

Cartridge

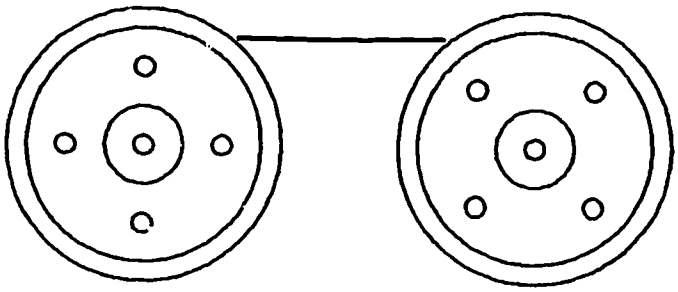

Spool

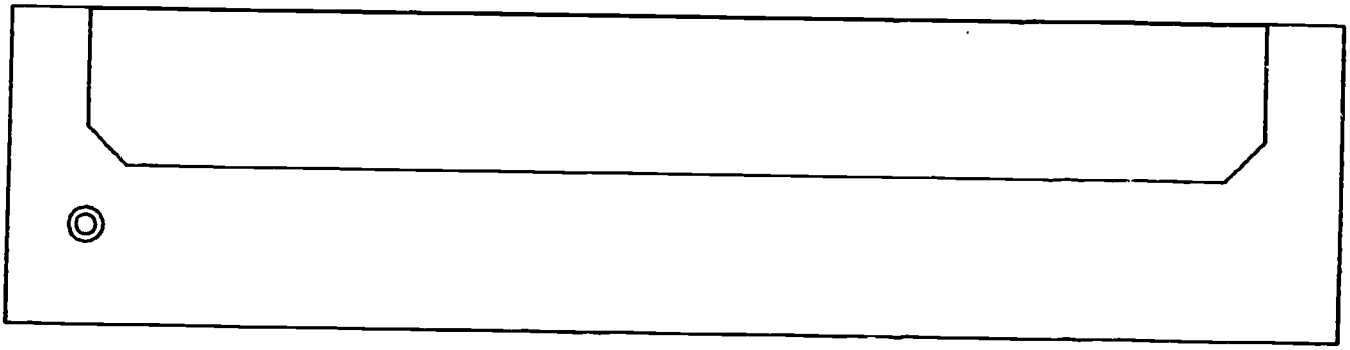

Cartridge

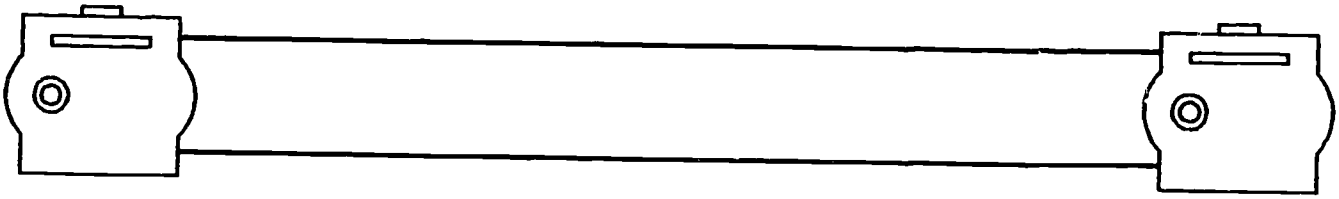

Cartridge

CHECKLIST

DUTY Servicing Computer Equipment.

TASK Install ribbon assembly.

ENABLER Remove and replace ribbon assembly.

STUDENT'S NAME _____ DATE _____

EVALUATOR'S NAME _____ COURSE _____

TIME : STARTED _____ COMPLETED _____

TOTAL _____

DIRECTIONS TO THE EVALUATOR:

Use checklist to evaluate student performance when installing ribbon assembly.

RECORD THIS INFORMATION:

MANUFACTURER: _____ MODEL: _____

SERIAL #: _____

| PERFORMANCE DETERMINANTS | YES | NO |
|---|---|---|
| The preparer | | |
| - Performed printer power down. | ____ | ____ |
| - Protected head while removing ribbon assembly. | ____ | ____ |
| - Removed ribbon assembly. | ____ | ____ |
| - Replaced new ribbon assembly. | ____ | ____ |
| - Tightened ribbon and set print mechanism to original position. | ____ | ____ |
| - Completed performance check. | ____ | ____ |

GUIDE SHEET

DUTY: Servicing Computer Equipment

---

PERFORMANCE OBJECTIVE #97

TASK: Install drive belts.

STANDARD OF PERFORMANCE OF TASK:

Drive belt installed must be free of cracks, worn, broken, or missing cogs.

SOURCE OF STANDARD:

Writing team of incumbent workers.
How to Maintain and Service Your Small Computer.

CONDITIONS FOR PERFORMANCE OF TASK:

Equipment to be serviced
Drive belts
Tool kit

ENABLING OBJECTIVES:

1. Inspect and determine type of drive belt.
2. Remove and replace a drive belt.

*RESOURCES:

1. Operation maintenance manual.
2. Art Margolis. Computer Technicians Handbook, Second Edition. Tab Books, Inc., Blue Ridge Summit, PA. 1985.
3. Stephenson and Cahill. How to Maintain and Service Your Small Computer. Howard W. Sams & Co. Inc., Indianapolis, IN. 1983.
4. Visual aid - Types of drive belts.
5. Checklist - Installing a drive belt.

TEACHING ACTIVITIES:

1. Read and interpret maintenance manual. (*1)
2. Present lecture on drive belt installation. (*1,2 & 3)
3. Demonstrate belt replacement. (*1 & 3)
4. Conduct class discussion on types of drive belt inspection techniques, and safety techniques. (*2,3 & 4)

TEACHING ACTIVITIES: (cont.)

5. Demonstrate belt inspection techniques.
6. Instruct student to inspect and install a belt. (#5)

CRITERION-REFERENCED MEASURE:

The student will inspect, remove, and replace a drive belt, and conduct a performance check test.

PERFORMANCE GUIDE:

1. Power down system and remove cover.
2. Loosen belt tension adjustment to release the tension from the belt.
3. Remove the belt from the drive pulley or gears.
4. Place new belt on drive pulley or gears and make sure that belt is properly aligned.
   A. Gear cogs and belt cogs mesh.
   B. Belt is seated in center of pulley.
5. Adjust the belt tension using the belt tension adjustment screw.
6. Turn drive and watch for belt binding or slippage.
7. Replace cover, power up, and run equipment to check for binding or slippage.

# TYPES OF BELTS

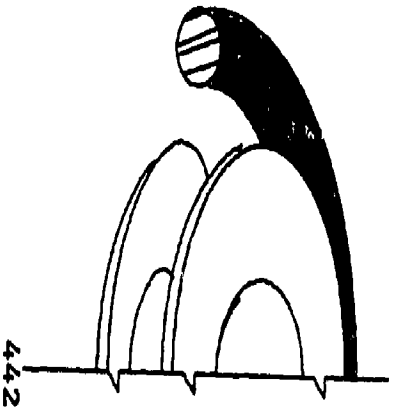

ROUND BELT

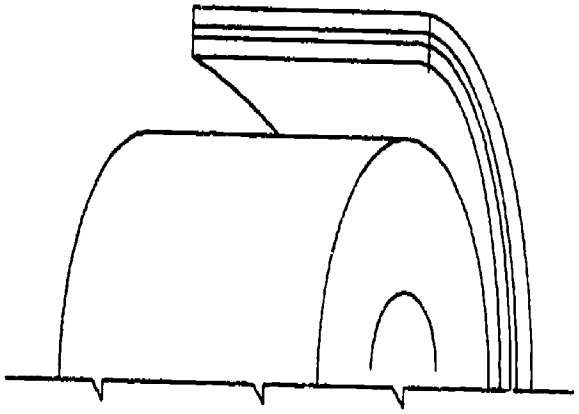

FLAT BELT

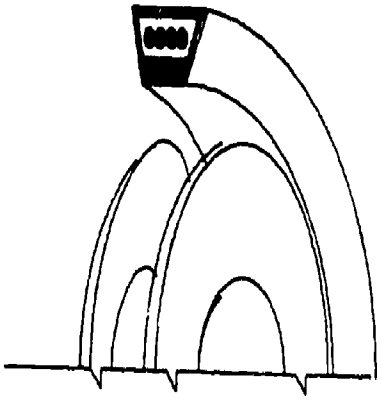

V-BELT

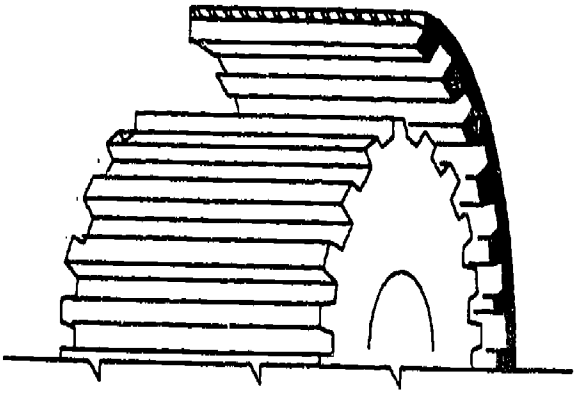

TIMING BELT

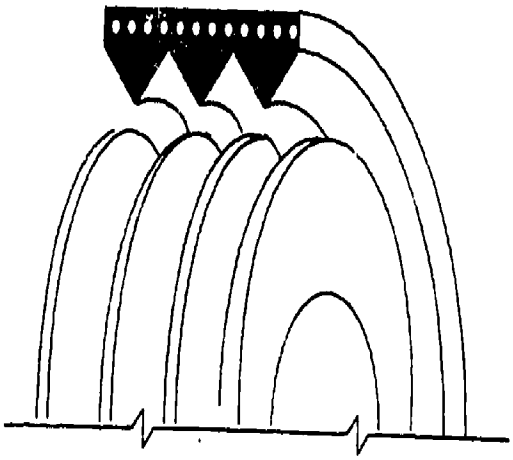

V-RIBBED BELT

CHECKLIST

DUTY Servicing Computer Equipment.

TASK Install drive belt.

ENABLER Inspect, remove and replace a drive belt.

STUDENT'S NAME _____ DATE _____

EVALUATOR'S NAME _____ COURSE _____

TIME : STARTED _____ COMPLETED _____

TOTAL _____

DIRECTIONS TO THE EVALUATOR:

Use checklist to evaluate student performance when installing drive belt

RECORD THIS INFORMATION:

MANUFACTURER: _____ MODEL: _____

SERIAL #: _____

| PERFORMANCE DETERMINANTS | YES | NO |
|---|---|---|
| The preparer | | |
| - Powered down system. | ____ | ____ |
| - Removed tension from drive belt. | ____ | ____ |
| - Removed drive belt. | ____ | ____ |
| - Inspected drive belt. | ____ | ____ |
| - Determined type of drive belt. | ____ | ____ |
| - Replaced drive belt. | ____ | ____ |
| - Aligned and seated drive belt. | ____ | ____ |
| - Adjusted drive belt tension | ____ | ____ |
| - Conducted an operational check test. | ____ | ____ |

GUIDE SHEET

DUTY: Servicing Computer Equipment

---

PERFORMANCE OBJECTIVE #98

TASK: Install AC input connections.

STANDARD OF PERFORMANCE OF TASK:

Worn, frayed or broken AC connection cable/cord must be replaced with a new AC connection cable/cord, so that the system will power up.

SOURCE OF STANDARD:

Writing team of incumbent workers.
How to Maintain and Service Your Small Computer.
Handbook of Computer Maintenance and Troubleshooting.

CONDITIONS FOR PERFORMANCE OF TASK:

Equipment to be serviced
AC connection cable/cord
Tool kit
Soldering tool
Solder sucker or wick
Solder

ENABLING OBJECTIVES:

1. Remove and replace AC connector.

*RESOURCES:

1. Installation/maintenance/operation manuals.
2. Stephenson and Cahill, How to Maintain and Service Your Small Computer. Howard W. Sams & Co. inc., Indianapolis, IN. 1983.
3. Visual aid - AC input connections.
4. Checklist - Installing AC input connections.

TEACHING ACTIVITIES:

1. Present lecture on power down procedure. (*1)
2. Present lecture on different types of AC power connectors. (*1 & 2)
3. Present types of AC power connectors. (*3)

TEACHING ACTIVITIES: (cont.)

4. Present lecture and conduct demonstration on proper soldering techniques. (#2)
5. Demonstrate soldering and desoldering techniques. (#2)
6. Present lecture on installing AC power connectors. (#1 & 2)
7. Demonstrate installation of AC power connectors.
8. Instruct student to install an AC power connector. (#4)

CRITERION-REFERENCED MEASURE:

The student will remove and replace AC connector and perform an operational check.

PERFORMANCE GUIDE:

1. Power down system and disconnect AC power cable/cord from power source.
2. Determine how AC power cable/cord is connected to equipment:
   A. Plug-in connection:
      1. Grasp cable/cord plug near socket and pull straight out. (Avoid wiggling plug if possible as it can loosen socket connection or break off pins.)
      2. Align groove on socket and plug, and gently push plug in.
   B. Wired connection:
      1. Remove equipment cover.
      2. Locate AC cable/cord lead wires.
      3. Desolder the lead connections using a solder.
      4. Remove AC cable/cord from internal connections.
      5. Resolder the lead wire connection. (Take care not to get solder on other parts.)
      6. Align cable/cord with AC cable/cord opening in the cover and replace cover.
3. Plug AC power cable/cord into power source and power up system.

# TYPES OF SLOTS AND PRONGS

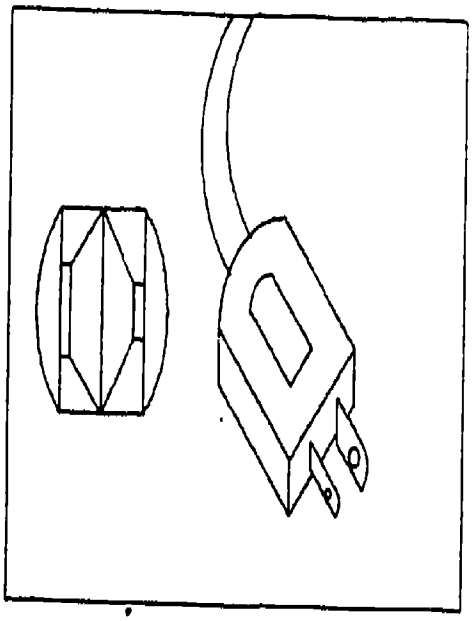

120-volt 15-ampere ungrounded

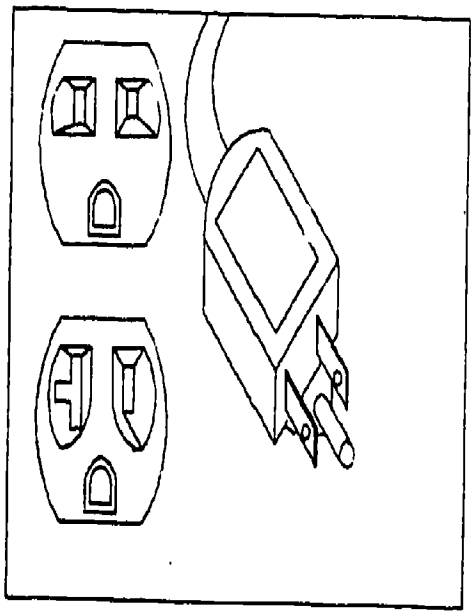

120-volt grounded

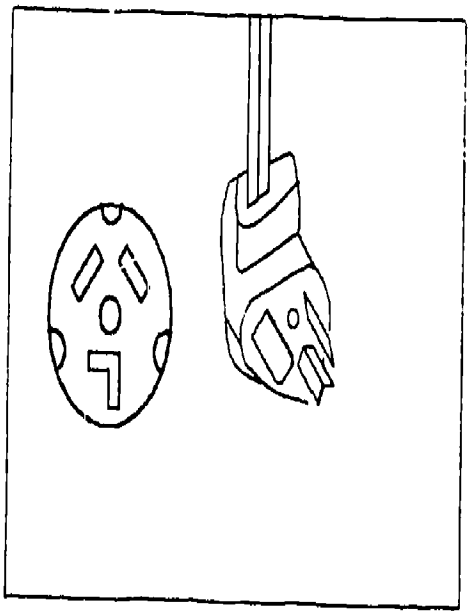

120/240-volt 30-ampere

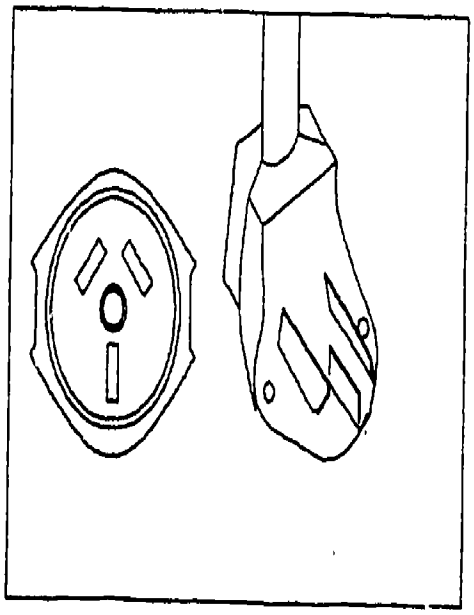

120/240-volt 50-ampere

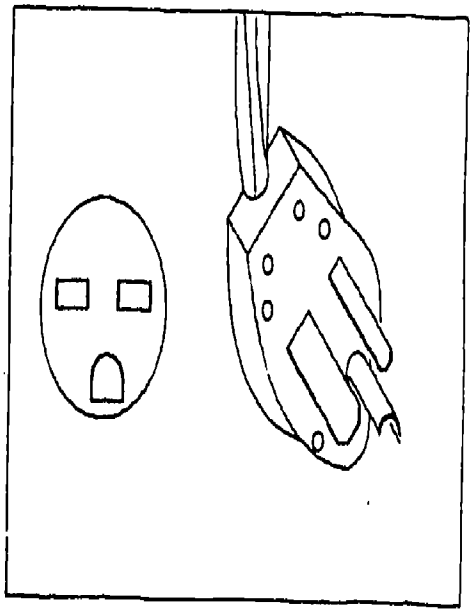

240-volt 30-ampere grounded

CHECKLIST

DUTY Servicing Computer Equipment.

TASK Install AC input connections.

ENABLER Remove and replace AC power connectors.

STUDENT'S NAME _____ DATE _____

EVALUATOR'S NAME _____ COURSE _____

TIME : STARTED _____ COMPLETED _____

TOTAL _____

DIRECTIONS TO THE EVALUATOR:

Use checklist to evaluate student performance when installing AC input connectors.

RECORD THIS INFORMATION:

MANUFACTURER: _____ MODEL: _____

SERIAL #: _____

| PERFORMANCE DETERMINANTS | YES | NO |
|---|---|---|
| The preparer | | |
| - Powered down system. | ____ | ____ |
| - Identified type of AC power connector. | ____ | ____ |
| - Removed AC power connector. | ____ | ____ |
| - Followed removal procedure. | ____ | ____ |
| - Replaced AC power connector. | ____ | ____ |
| - Powered up and tested system. | ____ | ____ |

GUIDE SHEET

DUTY: Servicing Computer Equipment

---

PERFORMANCE OBJECTIVE #99

TASK: Install fuse holders and fuses.

STANDARD OF PERFORMANCE OF TASK:

Fuse or fuse holder must be installed so equipment will not receive a power current overload and the equipment will power up.

SOURCE OF STANDARD:

Writing team of incumbent workers.
Handbook of Computer Maintenance and Troubleshooting.

CONDITIONS FOR PERFORMANCE OF TASK:

Equipment to be serviced
Tool kit
Fuse holder
Fuses

ENABLING OBJECTIVES:

1. Inspect fuse or fuse holder.
2. Remove and replace fuse or fuse holder.

*RESOURCES:

1. Installation/maintenance/operation manuals.
2. Stephenson and Cahill, How to Maintain and Service Your Small Computer. Howard W. Sams & Co. Inc., Indianapolis, IN. 1983.
3. Byron maguire. Handbook of Computer Maintenance and Troubleshooting.
   Reston Publishing Company, Inc., Reston, VA. 1973
4. Visual aid - Types of fuses and fuse holders.
5. Checklist - Installing fuse and fuse holders.

TEACHING ACTIVITIES:

1. Present lecture on power down procedure. (*1)
2. Present lecture on different types of fuses and fuse holders. (*2 & 3)

TEACHING ACTIVITIES: (cont.)

3. Present types of fuses and fuse holders. (#4)
4. Present lecture and common fuse and fuse holder problems. (#1,2 & 3)
5. Conduct demonstration showing problems that are common with fuses and fuse holders. (#2 & 3)
6. Present lecture on inspecting a fuse and fuse holder.
7. Demonstrate inspection of fuse S: (cont.)
8. Present lecture on installing a fuse and fuse holder.
9. Demonstrate installing a fuse and fuse holder.
10. Instruct student to install a fuse and fuse holder.

CRITERION-REFERENCED MEASURE:

The student will inspect, remove and replace a fuse and fuseholder, and conduct an operational check to verify that the problem has been corrected.

PERFORMANCE GUIDE:

1. Power down system and disconnect AC power cord.
2. Push in on fuse cap while turning counterclockwise until free.
3. Remove fuse and check for melted or broken center connector, and cracked or discolored glass.
4. Check end connection of fuse holder for corroded or loose connections.
5. If fuse holder is cracked, chipped or broken, remove equipment cover.
6. Remove retaining clip from back of fuse holder.
7. Remove fuse holder from case.
8. Insert new holder into position and replace retaining clip.
9. Replace cover.
10. Insert new fuse into holder and replace cap by pressing in turning clockwise until snug.
11. Power up system to check if fuse is making the proper connection.

# TYPES OF FUSES AND FUSE HOLDERS

**Fast Blow**

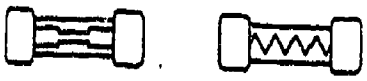

blows instantly with surge or short

**Slow Blow**

withstands heavy surges

**Direct Connect Fuse Wire**

connected between terminals

**Repairable**

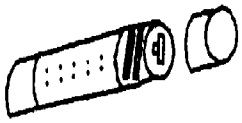

replacement of fuse wire

**Plug-in Fuse**

**Snap-in Holder**

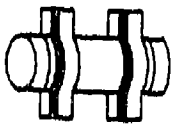

**Screw/Twist Top Holder**

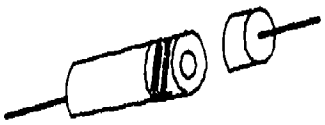

# FUSE INSPECTION POINTS

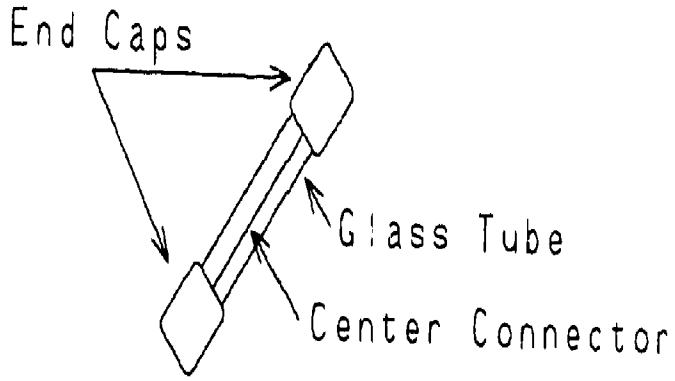




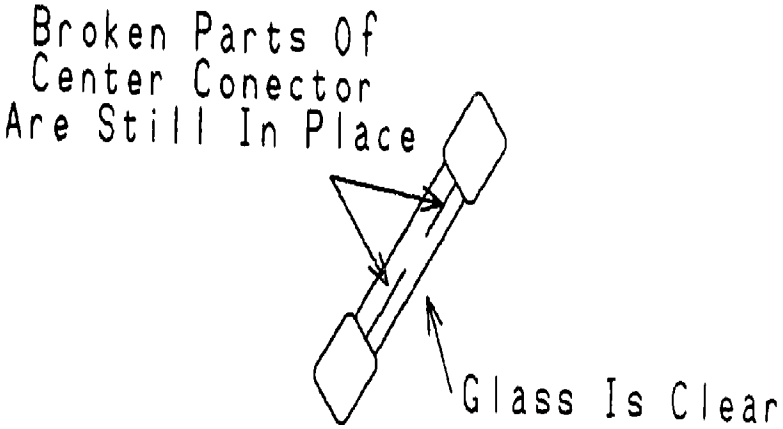


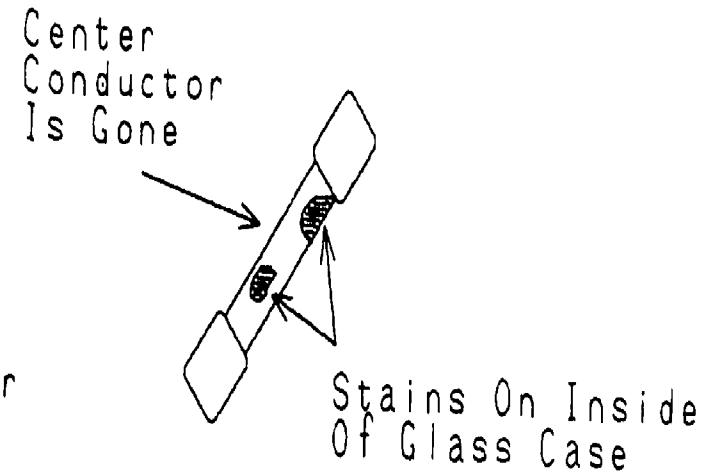


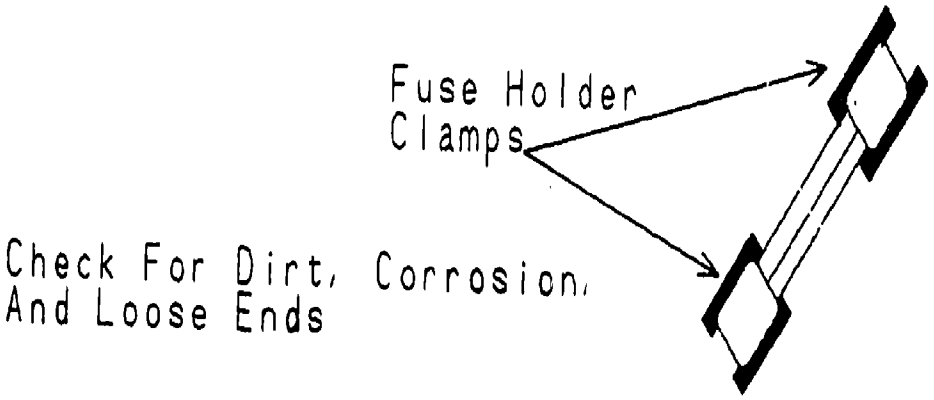

CHECKLIST

DUTY Servicing Computer Equipment.

TASK Install fuse holder and fuses.

ENABLER Remove and replace fuse and fuse holder.

STUDENT'S NAME _____ DATE _____

EVALUATOR'S NAME _____ COURSE _____

TIME : STARTED _____ COMPLETED _____

TOTAL _____

DIRECTIONS TO THE EVALUATOR:

Use checklist to evaluate student performance when installing fuses and fuse holder.

RECORD THIS INFORMATION:

MANUFACTURER: _____ MODEL: _____

SERIAL #: _____

| PERFORMANCE DETERMINANTS | YES | NO |
|---|---|---|
| The preparer | | |
| - Powered down system. | ____ | ____ |
| - Removed AC power cord. | ____ | ____ |
| - Located fuse holder. | ____ | ____ |
| - Removed fuse removed from holder. | ____ | ____ |
| - Inspected fuse for broken center connector, cracked or chipped glass and corroded or loose connections. | ____ | ____ |
| - Replaced fuse as needed. | ____ | ____ |
| - Replaced fuse holder as needed. | ____ | ____ |
| - Powered system and performed an operational check. | ____ | ____ |

GUIDE SHEET

DUTY: Servicing Computer Equipment

---

PERFORMANCE OBJECTIVE #100

TASK: Install ejector mechanism.

STANDARD OF PERFORMANCE OF TASK:

Disk must eject when disk drive door is opened.

SOURCE OF STANDARD:

Writing team of incumbent workers.
How to Maintain and Service Your Small Computer.

CONDITIONS FOR PERFORMANCE OF TASK:

Disk drive to be serviced
Ejector mechanism parts
Tool kit

ENABLING OBJECTIVES:

1. Disassemble disk drive, replace malfunctioning ejector mechanism components, and reassemble disk drive.
2. Identify internal components of a disk drive ejector mechanism.

*RESOURCES:

1. Stephenson and Cahill. How to Maintain and Service Your Small Computer. Howard Sams & Co., Indianapolis, IN. 1983.
2. Computer Technician's Handbook, Second Edition. Art Margolis, Tab Books Inc., Blue Ridge Summit, PA. 1985
3. Disk drive operator manual.
4. Schematic of drive unit.
5. Parts replacement list.
6. Visual aids of disk drive ejector mechanism components.
7. Ejector mechanism component identification worksheet.
8. Disassembly/reassembly and component troubleshooting checklist.

TEACHING ACTIVITIES:

1. Read and interpret disk drive operator manual and schematics.
2. Present lecture on disk drive ejector mechanism component.
3. Instruct students to complete a disk drive mechanism component identification worksheet. (#7)
4. Assign students to write three questions they wish answered concerning the ejector mechanism of a disk drive.
5. Conduct class discussion on ejector mechanism of a disk drive.
6. Present lecture on troubleshooting and repairing a disk drive. (#1 & 2)
7. Assign students to write three questions they wish answered concerning troubleshooting and repairing a disk drive.
8. Conduct class discussion on troubleshooting and repairing disk drive.
9. Review checklist for installing ejector mechanism. (#8)
10. Instruct student to disassemble disk drive, identify and replace ejector mechanism, using the performance checklist as an evaluation guide sheet. (#5 & 8)
11. Instruct student to test run disk drive to insure that all parts are functioning.

CRITERION-REFERENCED MEASURE:

The student will disassemble and troubleshoot the disk drive ejector mechanism for possible malfunctioning components the student will reassemble the disk drive and conduct a test run to verify that the drive is functioning correctly. All items on the performance checklist must be approved by the instructor.

PERFORMANCE GUIDE:

1. Power down system; and remove AC power cord.
2. Remove disk cover.
3. Check that when disk is inserted into the drive, that the ejector block is pushed back and locks into hole in retainer spring.
4. Replace ejector block if cracked or broken pieces are found.
5. Replace retainer spring if bent or broken.
6. Check that release spring on door latch releases retainer spring when door is open.
7. Replace release spring if bent or broken.
8. Check that ejector block return spring compresses when block is pushed in and pushes forward when released.
9. Replace return spring if stretched, bent or broken.

Disk Drive Ejector Mechanism Components.

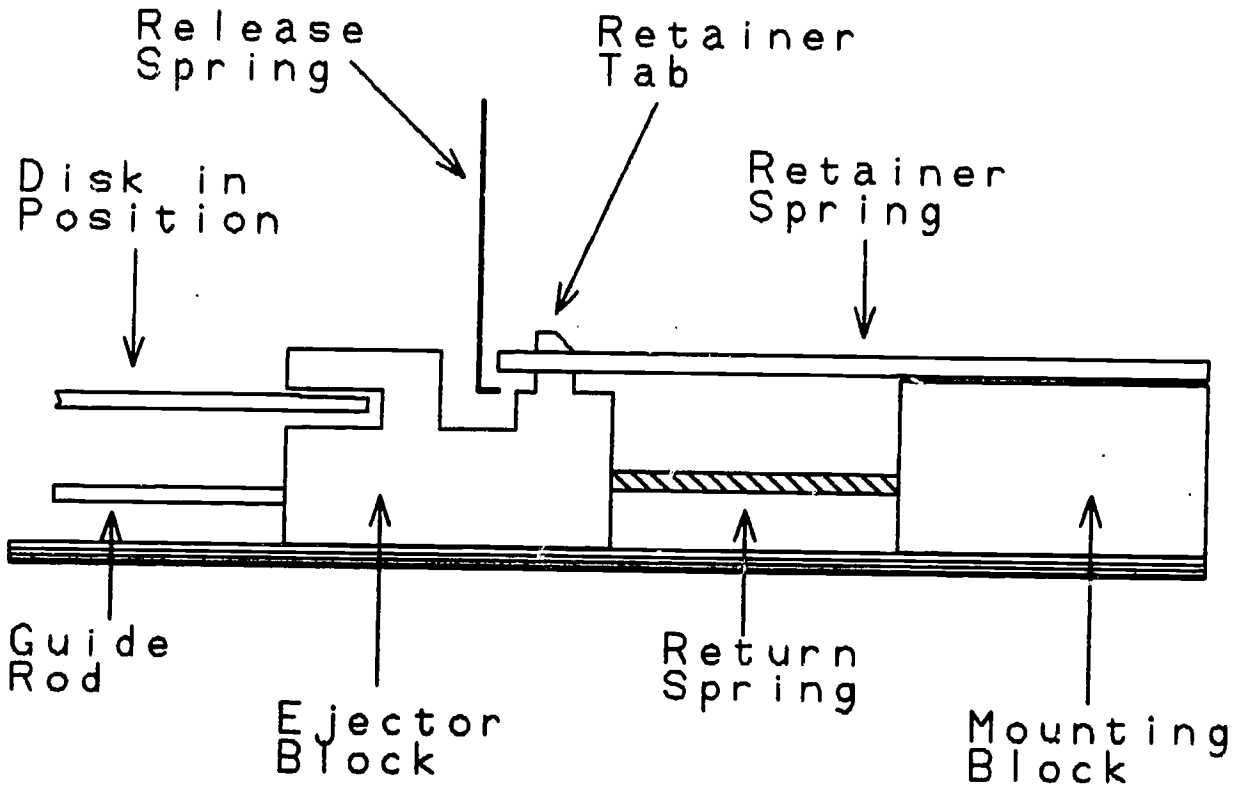

Disk Drive Ejector Mechanism Component Operation.

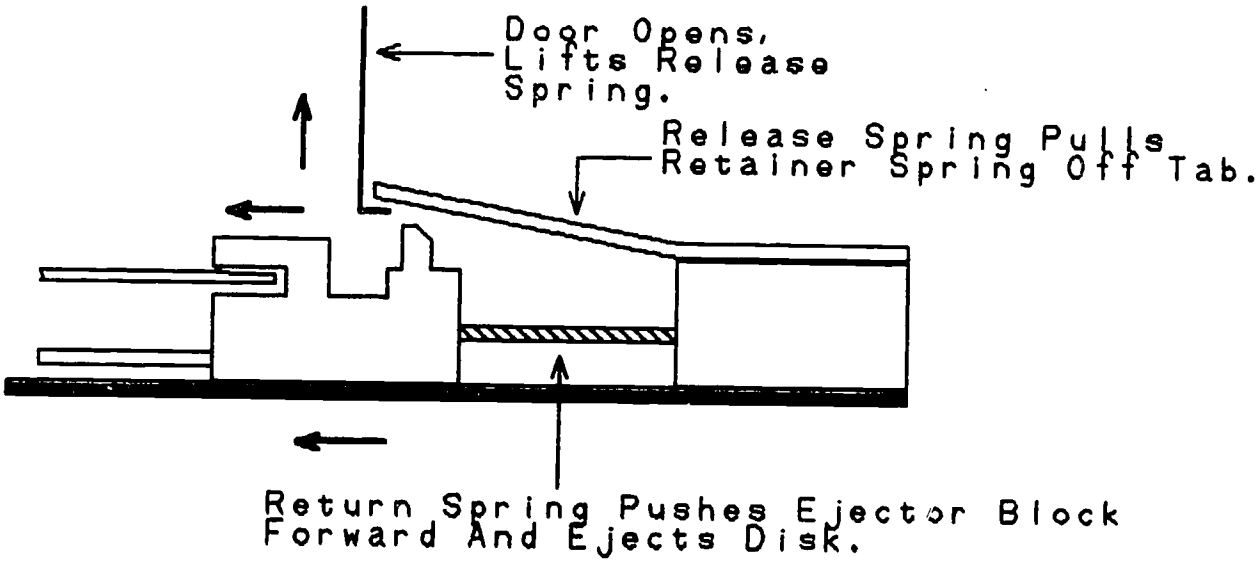

# DISK DRIVE EJECTOR MECHANISM COMPONENT WORKSHEET

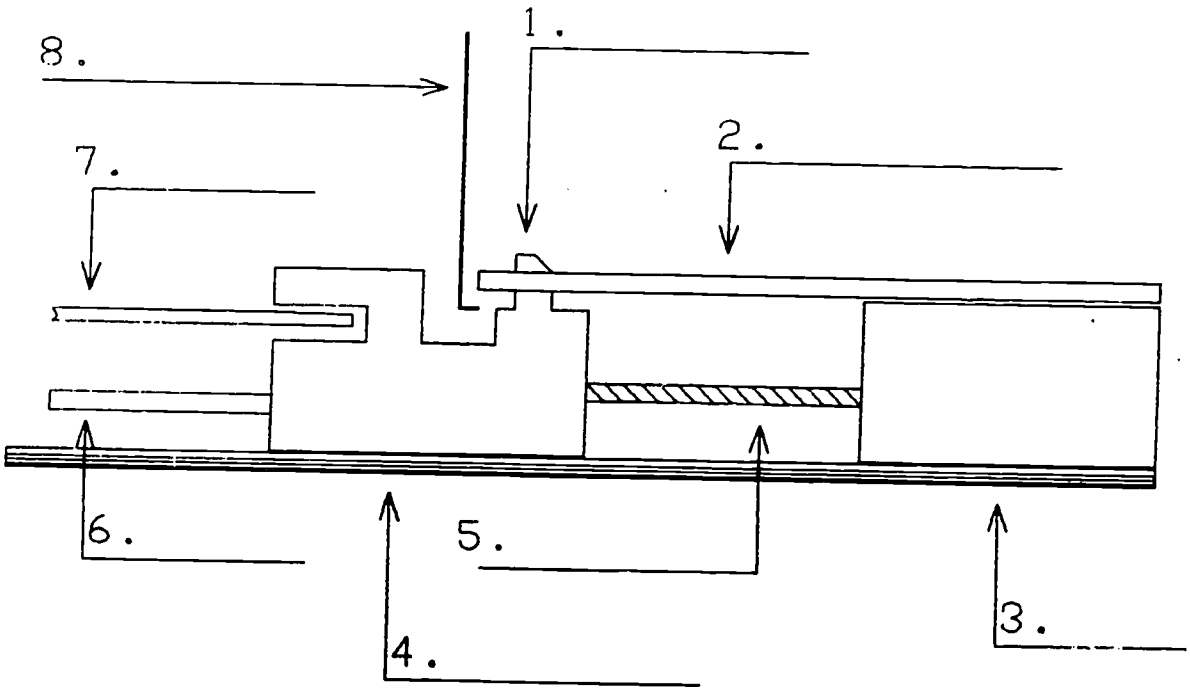

STUDENT WORKSHEET ANSWERS

1. Retainer Tab
2. Retainer Spring
3. Mounting Block
4. Ejector Block
5. Return Spring
6. Guide Rod
7. Disk in Position
8. Release Spring

CHECKLIST

DUTY Servicing Computer Equipment.

TASK Install ejector mechanism.

ENABLER Disassemble disk drive, replace malfunctioning ejector mechanism components, and reassemble disk drive.

STUDENT'S NAME _____ DATE _____

EVALUATOR'S NAME _____ COURSE _____

TIME : STARTED _____ COMPLETED _____

TOTAL _____

DIRECTIONS TO THE EVALUATOR:

Use checklist to evaluate student performance when installing ejector mechanism.

RECORD THIS INFORMATION:

MANUFACTURER: _____ MODEL: _____

SERIAL #: _____

| PERFORMANCE DETERMINANTS | YES | NO |
|---|---|---|
| The preparer | | |
| - Followed power down procedure. | ____ | ____ |
| - Assembled all needed tools before beginning disassembly. | ____ | ____ |
| - Removed disk drive cover without damage. | ____ | ____ |
| - Checked all ejector mechanism components for malfunctions. | ____ | ____ |
| - Identified all malfunctioning ejector mechanism components. | ____ | ____ |
| - Replaced all malfunctioning components. | ____ | ____ |
| - Reassembled disk drive ejector mechanism without damage to the other components. | ____ | ____ |
| - Tested disk drive after reassembly. | ____ | ____ |

PERFORMANCE DETERMINANTS: (cont.)

| | YES | NO |
|---|---|---|
| - Checked the disk drive ejector mechanism for full operational reassembly. | ____ | ____ |
| - Completed the task in the allowed time frame. | ____ | ____ |

GUIDE SHEET

DUTY: Servicing Computer Equipment

---

PERFORMANCE OBJECTIVE #101

TASK: Install cathode ray tube.

STANDARD OF PERFORMANCE OF TASK:

Monitor must power up and display a functional screen.

SOURCE OF STANDARD:

Writing team of incumbent workers.
Troubleshooting And Repairing Personal Computers.

CONDITIONS FOR PERFORMANCE OF TASK:

Monitor to be serviced
Replacement cathode ray tube
Tool kit

ENABLING OBJECTIVES:

1. Disassemble monitor, replace C.R.T. and reassemble monitor.

*RESOURCES:

1. Maintenance/operation manuals for monitor.
2. Schematic of monitor.
3. Stephenson and Cahill, How to Maintain and Service Your Small Computer. Howard W. Sams & Co. Inc., Indianapolis, IN. 1983.
4. Television Servicing with Basic Electronics. No. 21859, Howard Sams and Co., Indianapolis, IN.
5. Stan Gibilisco. Encyclopedia of Electronics. Tab Books Inc., Blue Ridge Summit, PA. 1985.
6. Art Margolis. Computer User's Guide to Electronics. Tab Book Inc., Blue Ridge Summit, PA. 1985.
7. Visual aid - Cathode ray tube.
8. Checklist - Installing cathode ray tube.

TEACHING ACTIVITIES:

1. Present lecture on C.R.T's. (*1,2,3,4,5 & 6)
2. Conduct class discussion on internal operation of C.R.T. (*4,5,6 & 7)

TEACHING ACTIVITIES: (cont.)

3. Present lecture on power down and disassembly of monitor. (#1)
4. Demonstrate power down and disassembly of monitor.
5. Demonstrate power down and working on C.R.T. (#3 & 4)
6. Demonstrate safety procedures for working on C.R.T.
7. Present lecture on installing a C.R.T. (#3,4,5 & 6)
8. Demonstrate installation of C.R.T.
9. Instruct student to install a C.R.T.

CRITERION-REFERENCED MEASURE:

The student will disassemble monitor, remove and replace C.R.T. Reassemble monitor, and conduct an operational check.

PERFORMANCE GUIDE:

1. Power down monitor and disconnect AC power cord.
2. Remove the back of the monitor case.
3. Discharge high voltage from the flyback transformer and disconnect lead.
   CAUTION: Up to 15,000 volts can be stored in the flyback transformer; the service manual should always be consulted for proper discharging method. Extreme care should be taken.
4. Disconnect and remove video driver board.
5. Remove yoke clamp screw and remove yoke clamp.
6. Remove ring magnet and deflection yoke.
7. Remove cathode ray tube retaining screws and carefully remove cathode ray tube.
8. Place new cathode ray tube in place and replace retaining screws.
9. Replace ring magnet and deflection yoke.
10. Refasten yoke clamp.
11. Replace back cover.
12. Reconnect AC power cord and power up monitor.

CATHODE RAY TUBE - INTERNAL FUNCTIONS

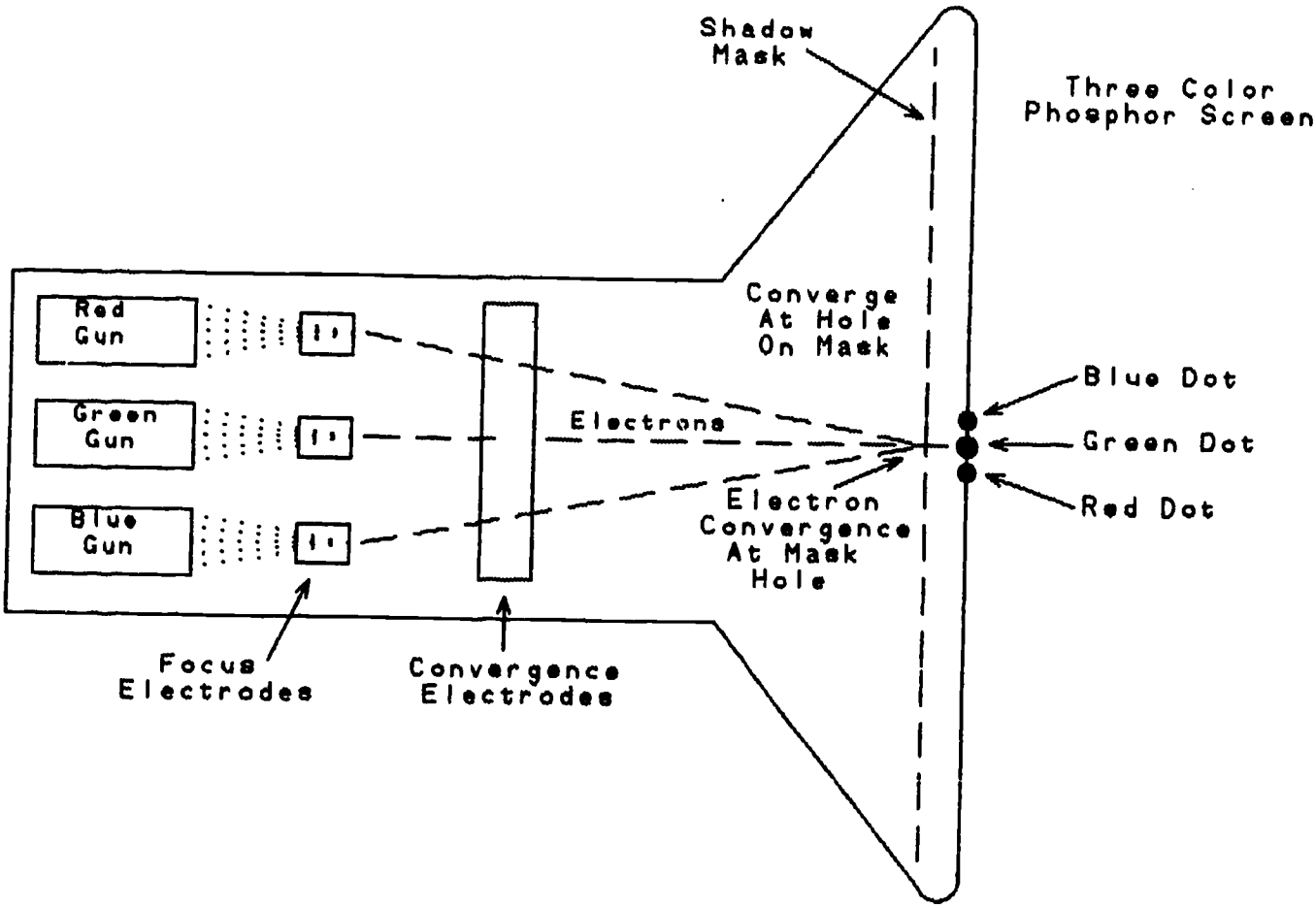

CATHODE RAY TUBE - YOKE ASSEMBLY

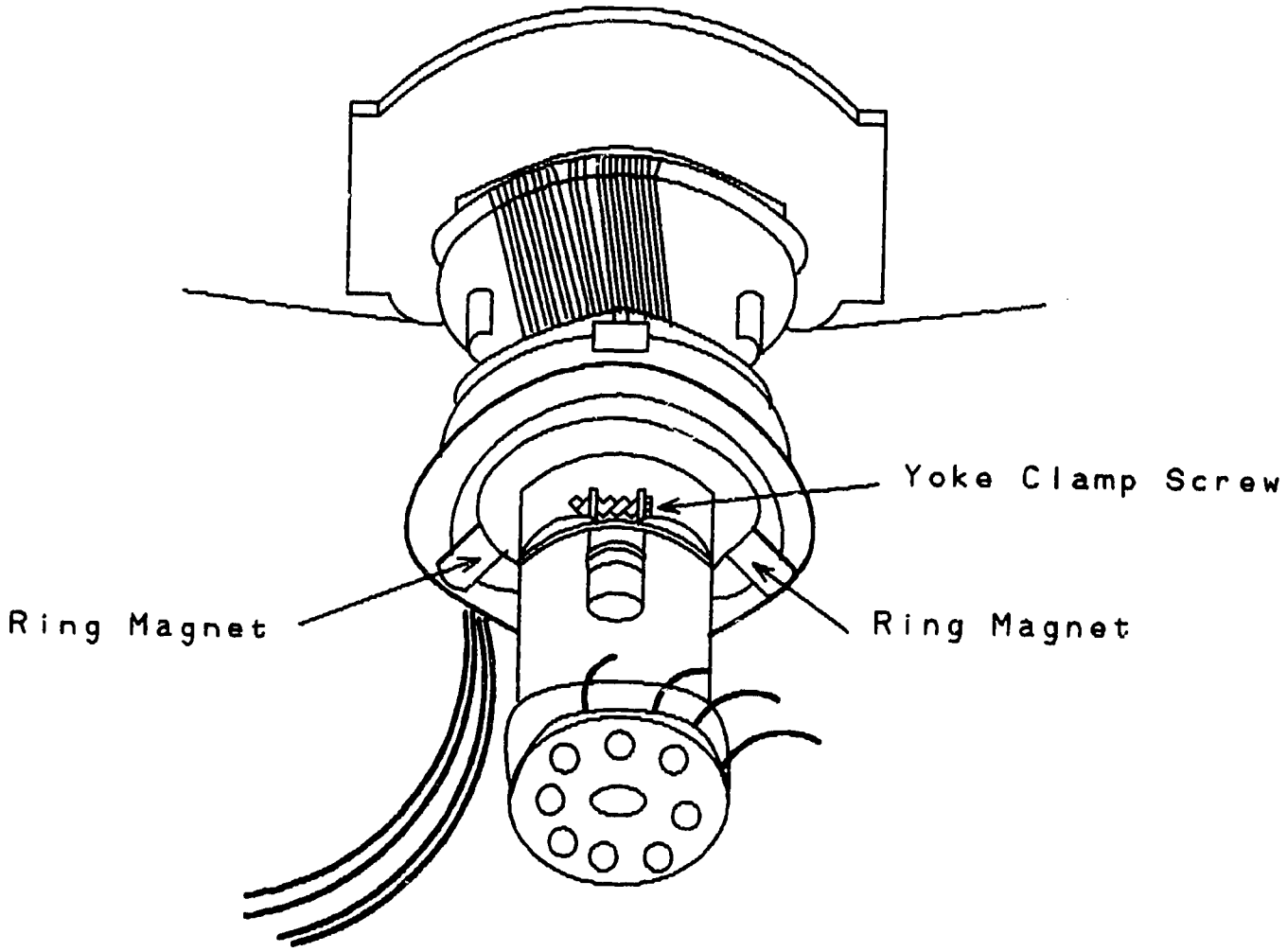

CHECKLIST

DUTY Servicing Computer Equipment.

TASK Install cathode ray tube.

ENABLER Disassemble monitor, remove and replace C.R.T. and reassemble monitor.

STUDENT'S NAME _____ DATE _____

EVALUATOR'S NAME _____ COURSE _____

TIME : STARTED _____ COMPLETED _____

TOTAL _____

DIRECTIONS TO THE EVALUATOR:

Use checklist to evaluate student performance when installing cathode ray tube.

RECORD THIS INFORMATION:

MANUFACTURER: _____ MODEL: _____

SERIAL #: _____

| PERFORMANCE DETERMINANTS | YES | NO |
|---|---|---|
| The preparer | | |
| - Powered system down and removed AC power cord. | ____ | ____ |
| - Removed back from monitor. | ____ | ____ |
| - Discharged flyback transformer and disconnected lead. | ____ | ____ |
| - Disconnected and removed video driver. | ____ | ____ |
| - Removed yoke clamp. | ____ | ____ |
| - Removed ring magnet and deflection yoke. | ____ | ____ |
| - Removed cathode ray tube retaining screws. | ____ | ____ |
| - Carefully removed cathode ray tube from mounts. | ____ | ____ |
| - Placed new cathode ray tube on mounts and replaced retaining screws. | ____ | ____ |

PERFORMANCE DETERMINANTS: (cont.)

| | YES | NO |
|---|---|---|
| - Reconnected ring magnet and deflection yoke. | ____ | ____ |
| - Reconnected yoke clamp. | ____ | ____ |
| - Reconnected video driver board and flyback transformer lead. | ____ | ____ |
| - Replaced back of monitor. | ____ | ____ |
| - Performed an operational check test on monitor. | ____ | ____ |

GUIDE SHEET

DUTY: Servicing Computer Equipment

---

PERFORMANCE OBJECTIVE #102

TASK: Install configuration switches.

STANDARD OF PERFORMANCE OF TASK:

Configuration switch must enable the printer to operate according to host system specifications.

SOURCE OF STANDARD:

Writing team of incumbent workers.
Apple Technical Manual.

CONDITIONS FOR PERFORMANCE OF TASK:

Printer to be serviced
Configuration switch
Tool kit
Host system

ENABLING OBJECTIVES:

1. Disassemble printer, replace malfunctioning configuration switches, reassemble printer.

*RESOURCES:

1. Maintenance/operation manuals for printer.
2. Schematic of switch PC board.
3. Stephenson and Cahill, How to Maintain and Service Your Small Computer. Howard W. Sams & Co. Inc., Indianapolis, IN. 1983.
4. Stan Gibilisco. Encyclopedia of Electronics. Tab Books Inc., Blue Ridge Summit, PA. 1985.
5. Visual aid - Configuration switches.
6. Checklist - Installing configuration switches.

TEACHING ACTIVITIES:

1. Present lecture on purpose of configuration switches. (*1,3 & 4)
2. Present demonstration on operation and function of configuration switches. (*1 & 2)
3. Present lecture on installation of configuration switches. (*1,3 & 4)

TEACHING ACTIVITIES: (cont.)

4. Demonstrate installation of configuration switches.
5. Present lecture on check out procedures. (#1,3 & 4)
6. Demonstrate check out procedures.
7. Instruct student to install a configuration switch.

CRITERION-REFERENCED MEASURE:

The student will disassemble printer, replace malfunctioning switch, reassemble printer and perform an operational check to verify that configuration is functioning.

PERFORMANCE GUIDE:

1. Power down printer to be serviced and remove AC power cord and peripheral cables.
2. Remove printer cover.
3. Remove configuration switch retaining screws.
4. Mark any wires or cables connected to the switch and remove them.
5. Remove configuration switch from printer.
6. Place configuration switch in place.
7. Reconnect wires or cables to the switch as marked.
8. Replace configuration switch retaining screws.
9. Set configuration switch according to system specifications.
10. Reconnect AC power cord and peripheral cable.
11. Power up system and perform print test to insure that printer operates with system.

TYPICAL LOCATION OF CONFIGURATION SWITCHES

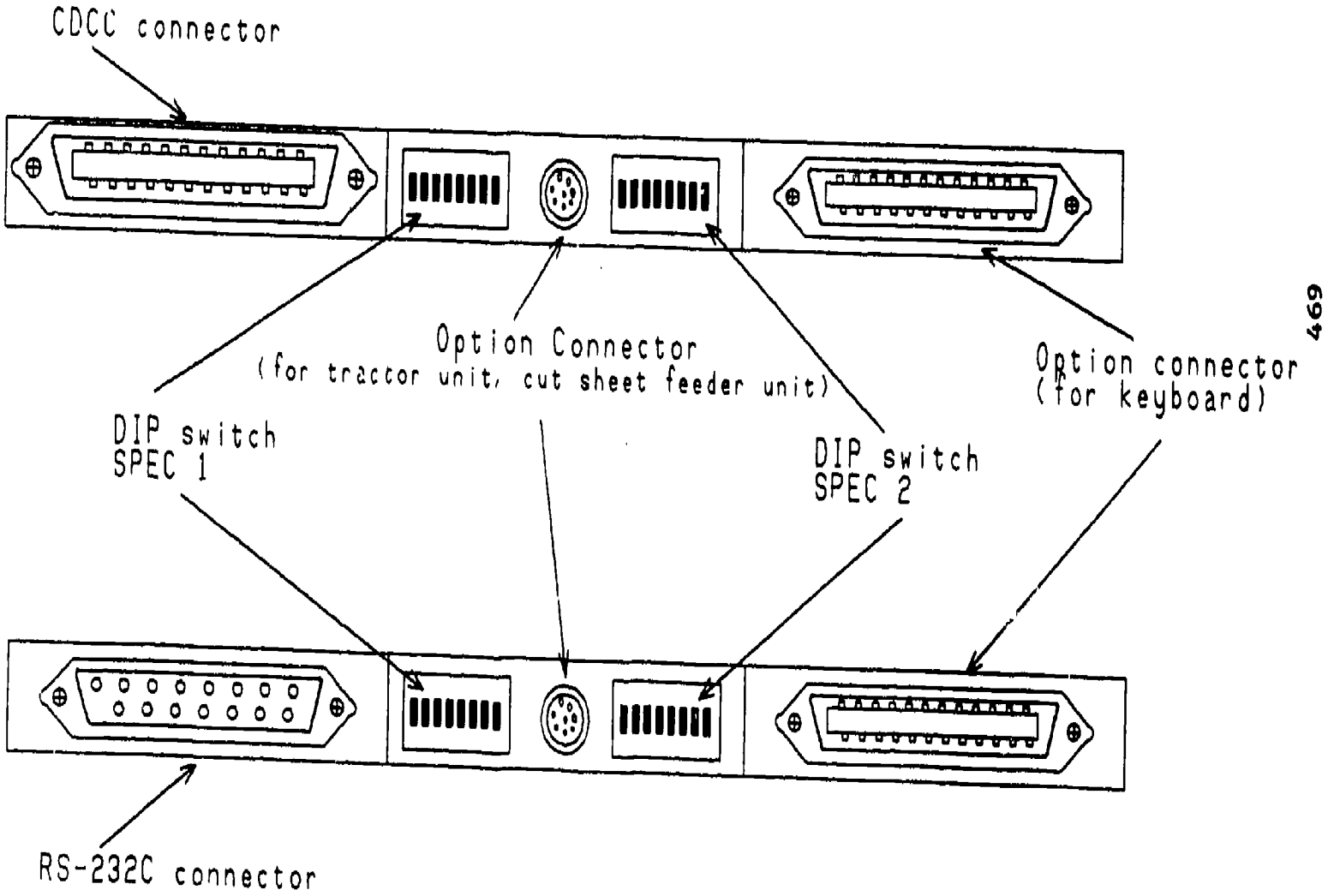


469

532

533

CHECKLIST

DUTY Servicing Computer Equipment.

TASK Install configuration switch.

ENABLER Disassemble printer, replace malfunctioning configuration switch and reassemble printer.

STUDENT'S NAME _____ DATE _____

EVALUATOR'S NAME _____ COURSE _____

TIME : STARTED _____ COMPLETED _____

TOTAL _____

DIRECTIONS TO THE EVALUATOR:

Use checklist to evaluate student performance when installing configuration switch.

RECORD THIS INFORMATION:

MANUFACTURER: _____ MODEL: _____

SERIAL #: _____

| PERFORMANCE DETERMINANTS | YES | NO |
|---|---|---|
| The preparer | | |
| - Powered down printer and disconnected AC power cord. | ____ | ____ |
| - Removed printer cover. | ____ | ____ |
| - Removed configuration retaining screws. | ____ | ____ |
| - Marked wires and cables connected to the configuration switch before removing. | ____ | ____ |
| - Removed configuration switch from mount. | ____ | ____ |
| - Position new configuration switch on mount. | ____ | ____ |
| - Reconnected lead wires and cable as marked. | ____ | ____ |
| - Replaced retaining screws. | ____ | ____ |
| - Reconnected AC power. | ____ | ____ |
| - Powered up system and performed an operational check test. | ____ | ____ |

GUIDE SHEET

DUTY: Servicing Computer Equipment

---

PERFORMANCE OBJECTIVE #103

TASK: Install peripheral controls.

STANDARD OF PERFORMANCE OF TASK:

Peripheral control must provide control between the central processing unit and peripheral equipment.

SOURCE OF STANDARD:

Writing team of incumbent workers.

CONDITIONS FOR PERFORMANCE OF TASK:

Peripheral control
Tool kit

ENABLING OBJECTIVES:

1. Disconnect cables from peripheral controls, replace peripheral controls, and perform check on control unit.

*RESOURCES:

1. Maintenance/operation manuals for a control unit.
2. Stephenson and Cahill. How to Maintain and Service Your Small Computer. Howard W. Sams & Co. Inc., Indianapolis, IN. 1983.
3. Visual aid - Peripheral controls.
4. Checklist - Installing peripheral controls.

TEACHING ACTIVITIES:

1. Present lecture on control units. (*1 & 2)
2. Present lecture on disassembly and assembly methods. (*1 & 2)
3. Demonstrate disassembly and assembly methods.
4. Conduct class discussion on cable installation/removal with different types of connectors. (*1,2 & 3)
5. Present lecture on proper test procedures. (*1 & 2)

TEACHING ACTIVITIES: (cont.)

6. Demonstrate operational check test procedures.
7. Instruct student to install a peripheral cable. (#4)

CRITERION-REFERENCED MEASURE:

The student will remove and replace peripheral control, connect control unit to CPU and peripherals, and perform an operational check test.

PERFORMANCE GUIDE:

1. Power down system.
2. Disconnect cable connector retaining latch and remove peripheral cable between control and central processing unit.
3. Remove peripheral cable between control and peripheral equipment.
4. Remove peripheral control unit.
5. Replace peripheral control unit and reconnect peripheral cable between control and peripheral equipment.
6. Replace peripheral cable between control and central processing unit.
7. Relatch the peripheral connector retaining latches.
8. Power up system and check control unit for control of peripherals.

Install peripheral control between
Printer, Drive, and Computer

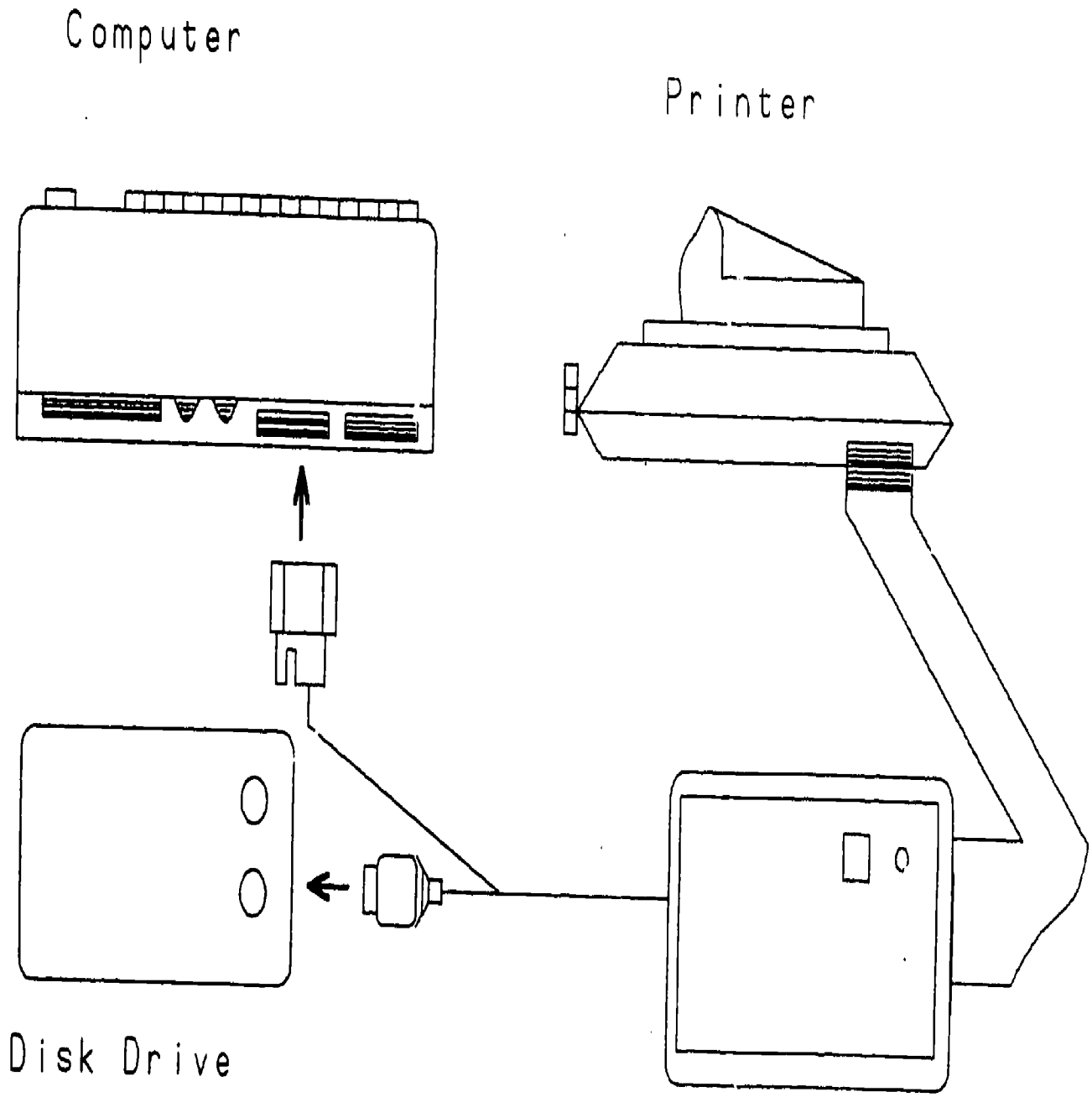

CHECKLIST

DUTY Servicing Computer Equipment.

TASK Install peripheral controls.

ENABLER Disconnect cables from peripheral controls, replace peripheral control, and perform check on control unit.

STUDENT'S NAME _____ DATE _____

EVALUATOR'S NAME _____ COURSE _____

TIME : STARTED _____ COMPLETED _____

TOTAL _____

DIRECTIONS TO THE EVALUATOR:

Use checklist to evaluate student performance when installing peripheral controls.

RECORD THIS INFORMATION:

MANUFACTURER: _____ MODEL: _____

SERIAL #: _____

| PERFORMANCE DETERMINANTS | YES | NO |
|---|---|---|
| The preparer | | |
| - Powered down system. | ____ | ____ |
| - Disconnected cable connection retaining latches. | ____ | ____ |
| - Removed peripheral control cable. | ____ | ____ |
| - Replaced peripheral control. | ____ | ____ |
| - Reconnected peripheral control. | ____ | ____ |
| - Reconnected retaining latches to peripheral cable connector. | ____ | ____ |
| - Powered up system and conducted an operational check test on peripheral control. | ____ | ____ |

GUIDE SHEET

DUTY: Servicing Computer Equipment

---

PERFORMANCE OBJECTIVE #104

TASK: Install data communication adapter.

STANDARD OF PERFORMANCE OF TASK:

Data communication adapter must enable data communication equipment to operate in conjunction with system.

SOURCE OF STANDARD:

Writing [illegible] incumbent workers.

CONDITIONS FOR PE[illegible] OF TASK:

System [illegible]ed
Data com[illegible]ion equipment
Data communication adapter
Tool kit

ENABLING OBJECTIVES:

1. Install data communication adapter and perform operational check test.

*RESOURCES:

1. Manufacturer's operating manual.
2. Technical manual.
3. Checklist - Installing data communication adapter.

TEACHING ACTIVITIES:

1. Present lecture on purpose and operation of data communication system.
2. Present lecture on data communication adapter installation procedures.
3. Conduct demonstration on installing data communication adapter. (*1 & 2)
4. Present lecture on operational check for a data communication adapter. (*1 & 2)
5. Demonstrate operational check for a data communication adapter.
6. Instruct student to install a data communication adapter. (*3)

CRITERION-REFERENCED MEASURE:

The student will install a data communication adapter, and conduct an operational check to insure that adapter operates in conjunction with the system.

PERFORMANCE GUIDE:

1. Power down system.
2. Determine type of adapter needed to connect data communication equipment to the system:
   A. Pin adapter.
   B. Card edge adapter.
   C. Jack/plug adapter.
3. Connect adapter to system and data communication equipment.
4. Power up system and test data communication equipment to insure that it is functional.

CHECKLIST

DUTY Servicing Computer Equipment.

TASK Install data communication adapter.

ENABLER Install data communication adapter and perform operational check test.

STUDENT'S NAME _____ DATE _____

EVALUATOR'S NAME _____ COURSE _____

TIME : STARTED _____ COMPLETED _____

TOTAL _____

DIRECTIONS TO THE EVALUATOR:

Use checklist to evaluate student performance when installing data communication adapter.

RECORD THIS INFORMATION:

MANUFACTURER: _____ MODEL: _____

SERIAL #: _____

| PERFORMANCE DETERMINANTS | YES | NO |
|---|---|---|
| The preparer | | |
| - Powered down system. | ____ | ____ |
| - Determined type of adapter needed. | ____ | ____ |
| - Connected adapter to system. | ____ | ____ |
| - Powered system up. | ____ | ____ |
| - Performed an operational check test. | ____ | ____ |
| - Prepared data communication adapter to pass operational check test. | ____ | ____ |

GUIDE SHEET

DUTY: Servicing Computer Equipment.

---

PERFORMANCE OBJECTIVE #105

TASK: Install expansion memory.

STANDARD OF PERFORMANCE OF TASK:

System memory capabilities must be expanded and must past diagnostic test without error.

SOURCE OF STANDARD:

Writing team of incumbent workers.
How To Maintain and Service Your Small Computer.
Troubleshooting and Repairing Personal Computers.

CONDITIONS FOR PERFORMANCE OF TASK:

Expansion memory
Central processing unit
Tool kit
Schematic memory map
Integrated circuit chip remover
Integrated circuit chip inserter

ENABLING OBJECTIVES:

1. Disassemble unit install expansion memory, reassemble unit, and conduct an operational check test.
2. Identify memory chip location using schematic memory map.

*RESOURCES:

1. Stephenson and Cahill, How to Maintain and Service Your Small Computer. Howard Sams & Co., Indianapolis, IN. 1983.
2. Installation/maintenance/operation manuals.
3. Art Margolis. Troubleshooting and Repairing Personal Computers. Tab Books Inc., Blue Ridge Summit, PA. 1983.
4. Schematic memory map.
5. Art Margolis. Computer User's Guide to Electronics. Tab Books Inc., Blue Ridge Summit, PA. 1985.
6. Visual aid - Memory board, memory chip, and expansion port.
7. Checklist - Installing expansion units.

TEACHING ACTIVITIES:

1. Present lecture on ROM, RAM memory systems. (#1,3 & 5)
2. Present lecture on types of memory expansion units in memory system. (#1,2,3,5 & 6)
3. Demonstrate types of memory expansion units.
4. Read and understand logic of schematic memory map. (#1 & 4)
5. Present lecture on interpreting schematic of memory map. (#1,2,3,4 & 5)
6. Conduct class discussion on proficiency of different types of memory. (#1 & 3)
7. Demonstrate interpreting memory map schematic. (#4)
8. Present lecture on safety procedures when working on the inside of unit. (#1,2,3 & 5)
9. Present lecture on installing expansion memory. (#1,2,3,4 & 5)
10. Demonstrate installing expansion memory.
11. Instruct student to install expansion memory. (#7)

CRITERION-REFERENCED MEASURE:

The student will disassemble unit, remove and replace, or install memory unit, reassemble unit, and perform operational check test on memory system.

PERFORMANCE GUIDE:

1. Power down system; disconnect AC power cord and remove central processing unit cover.
2. Determine type of memory expansion to be made:
   A. ROM--Read only memory.
   B. RAM--Read access memory.
3. Determine design of memory expansion the system uses:
   A. Integrated circuit chip.
   B. Memory card.
   C. Cartridge.
4. Determine location for installing expansion memory using schematic memory map.
5. Install memory expansion into central processing unit.
   NOTE: Reconfigure switches to include added memory.
6. Replace cover.
7. Power up system and check central processing unit for available memory.

# Memory Expansion Board

## With RAM Chips

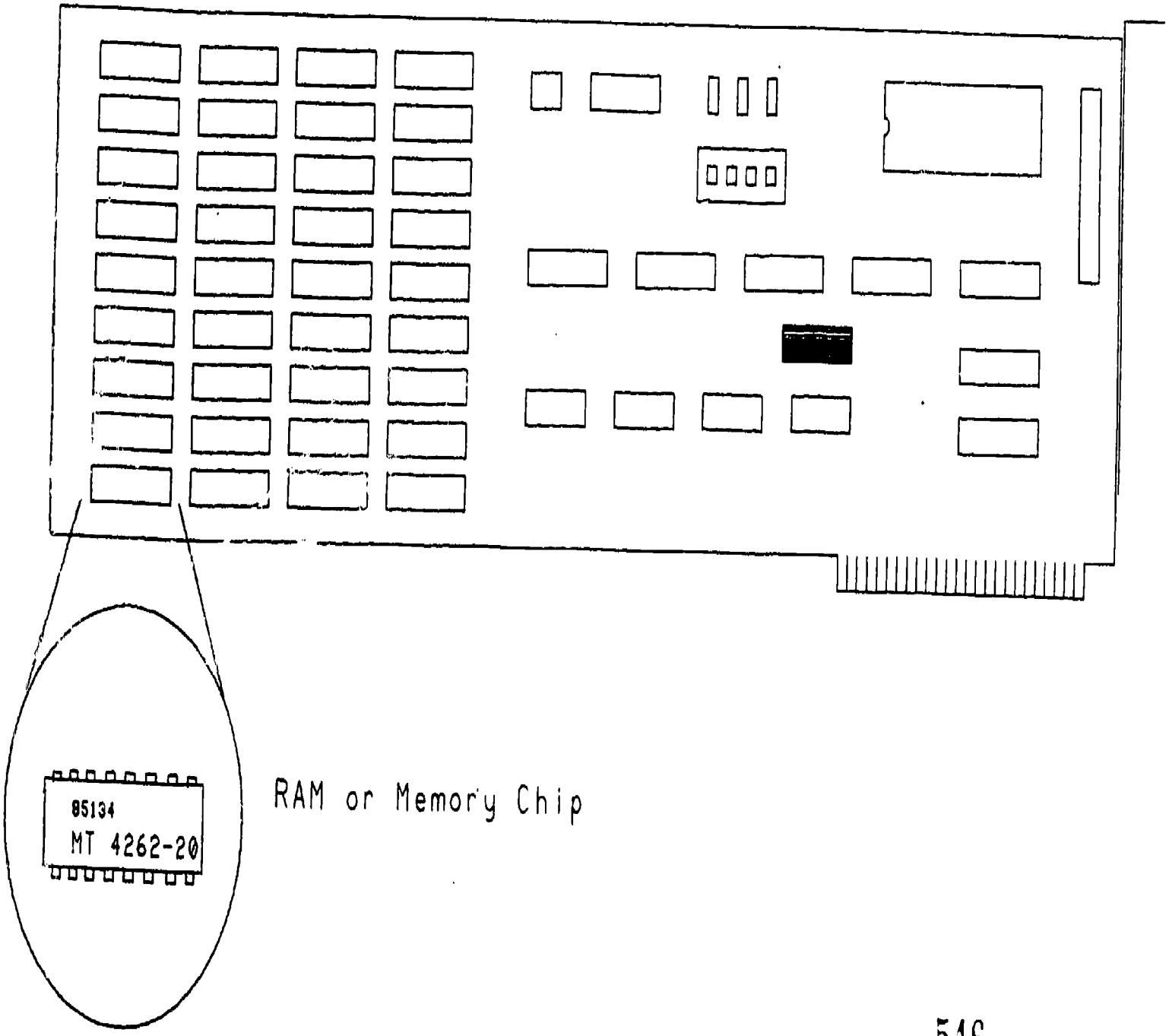

# Memory Expansion Board

## With RAM Chips

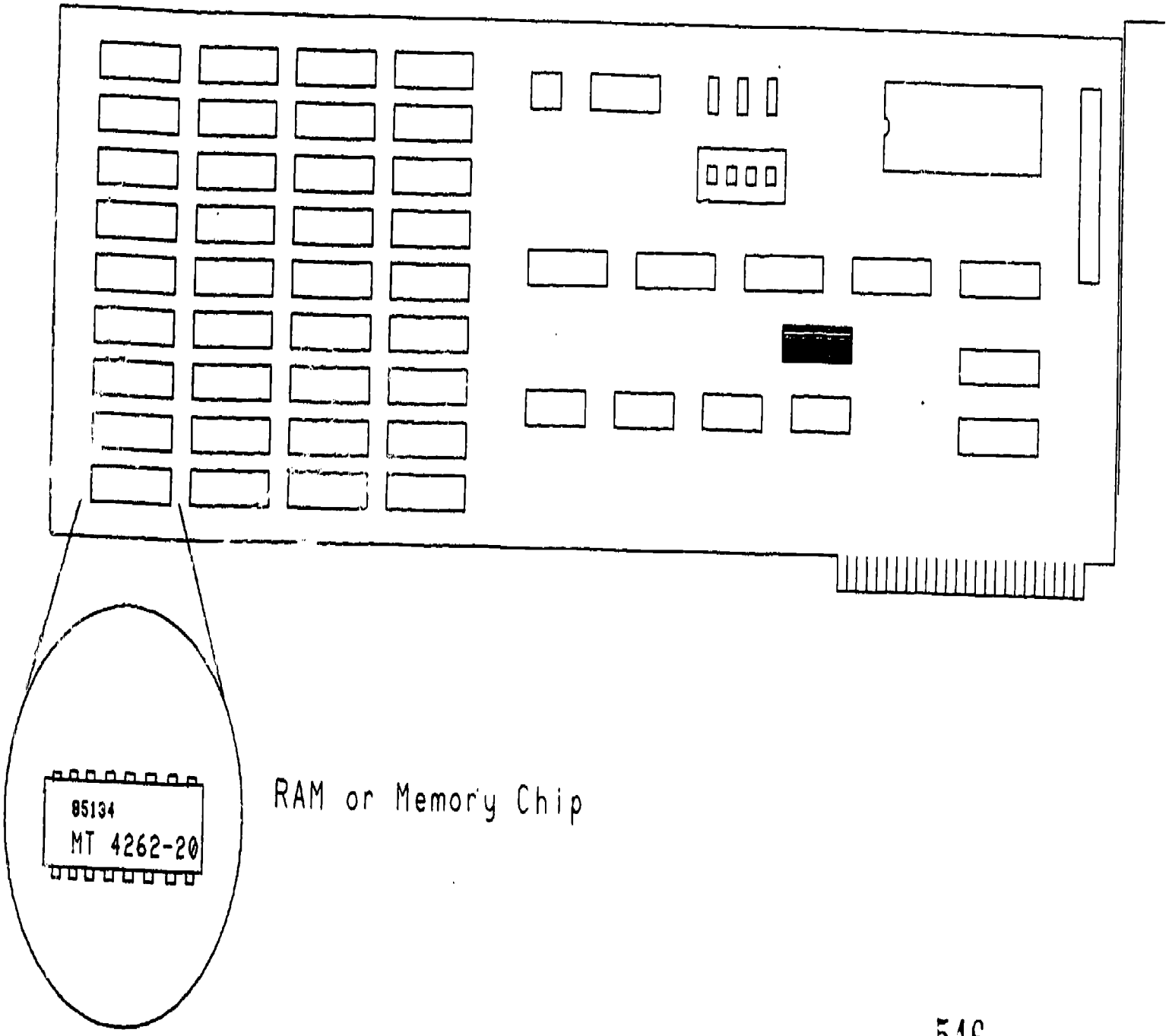

GUIDE SHEET

DUTY: Servicing Computer Equipment

---

PERFORMANCE OBJECTIVE #106

TASK: Install main memory.

STANDARD OF PERFORMANCE OF TASK:

Central processing unit memory capabilities must be able to load, manipulate and store information, and pass diagnostic test without error.

SOURCE OF STANDARD:

Writing team of incumbent workers.
Troubleshooting and Repairing Personal Computers.
How To Maintain and Service Your Small Computer.

CONDITIONS FOR PERFORMANCE OF TASK:

Central processing unit to be serviced
RAM integrated circuit chips
ROM integrated circuit chips
Integrated circuit chip inserter
Integrated circuit chip remover
Tool kit

ENABLING OBJECTIVES:

1. Disassemble unit, remove and replace or install memory integrated circuits, and reassemble unit.
2. Student will identify chips as ROM or RAM chips.

*RESOURCES:

1. Art Margolis. Troubleshooting and Repairing Personal Computers. Tab Books Inc., Blue Ridge Summit, PA. 1983.
2. Operation/maintenance manual.
3. Stephenson and Cahill, How to Maintain and Service Your Small Computer. Howard Sams & Co., Indianapolis, IN. 1983.
4. Art Margolis Computer User's Guide to Electronics. Tab Books Inc., Blue Ridge Summit, PA. 1983.
5. Computer Technicians Handbook.
6. Visual aid - Install memory chip.
7. Checklist - Installing main memory.

TEACHING ACTIVITIES:

1. Present lecture on test procedure for motherboard RAM and ROM memory. (#1,3,4 & 5)
2. Demonstrate test procedure for motherboard RAM and ROM memory.
3. Present lecture on troubleshooting of memory integrated circuit. (#1,2,3,4 & 5)
4. Conduct hands on demonstration on removing and replacing integrated circuits in a printed circuit board. (#1,2 & 3)
5. Present lecture on interchangeability of memory integrated circuits. (#3)
6. Demonstrate interchangeability of memory integrated circuits.
7. Present lecture on installing main memory integrated circuits. (#1,3,4 & 5)
8. Demonstrate installation of main memory integrated circuits.
9. Instruct student to install main memory integrated circuits. (#7)

CRITERION-REFERENCED MEASURE:

The student will disassemble unit, locate, remove and replace malfunctioning IC or install upgrade memory IC's and reassemble unit.

PERFORMANCE GUIDE:

1. Power down system; disconnect AC power cord and remove cover.
2. Identify malfunctioning integrated circuit chip on motherboard.
3. Remove malfunctioning integrated circuit chip.
4. Obtain replacement integrated circuit chip by matching identification code on malfunctioning chip with identification code on replacement chip.
5. Insert replacement chip on motherboard.
6. Replace cover, connect AC power cord and power up system.
7. Run motherboard RAM and ROM tests to check if memory is functional.

## MOUNTING IC IN SOCKET

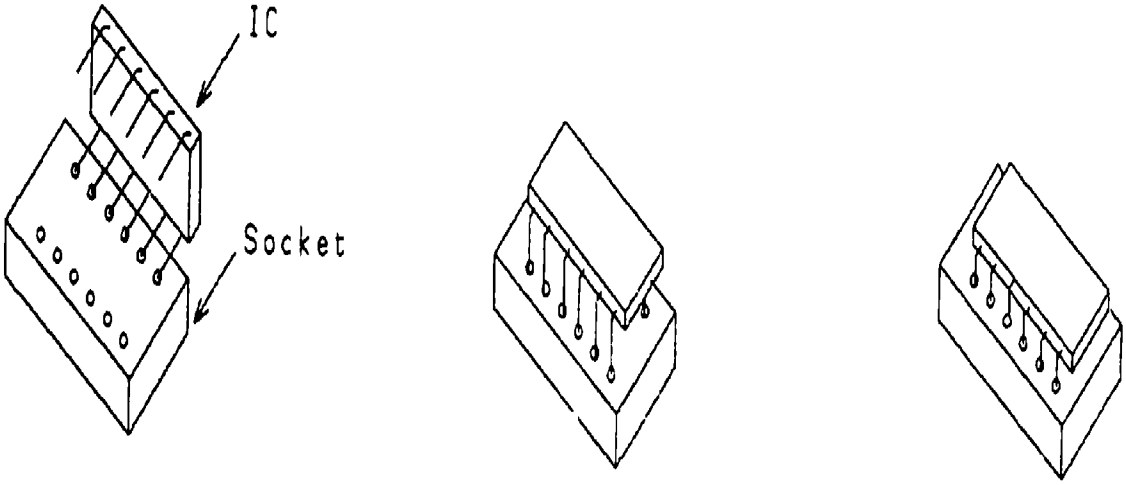


(A) Insert one row of pins (B) Insert other row of pins (C) Press IC into position

550

551

# I.C. CHIP
# LOCATION OF PIN 1

Looking from the top of the I.C. Chip, pin 1 is to the left of the notch or groove in the end of the chip.

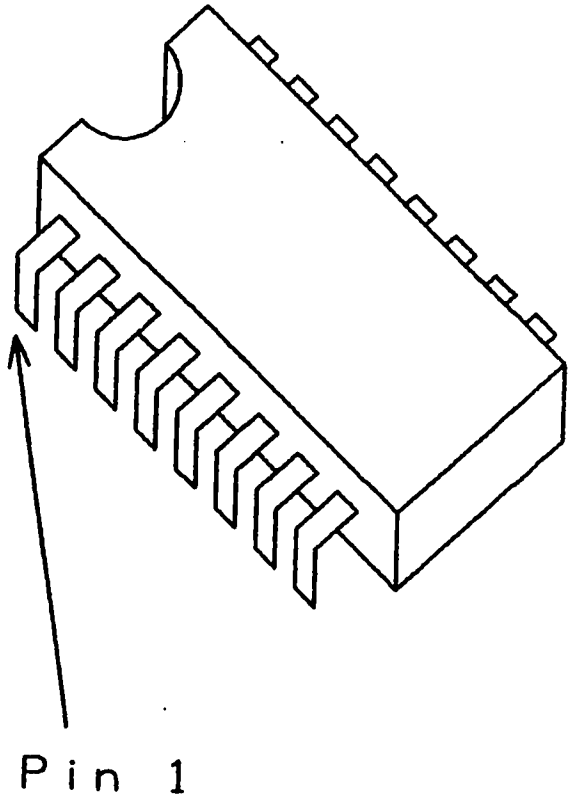

CHECKLIST

DUTY Servicing Computer Equipment.

TASK Install main memory.

ENABLER Disassemble unit, remove, replace or install memory IC's and reassemble unit.

STUDENT'S NAME _____ DATE _____

EVALUATOR'S NAME _____ COURSE _____

TIME : STARTED _____ COMPLETED _____

TOTAL _____

DIRECTIONS TO THE EVALUATOR:

Use checklist to evaluate student performance when installing main memory.

RECORD THIS INFORMATION:

MANUFACTURER: _____ MODEL: _____

SERIAL #: _____

| PERFORMANCE DETERMINANTS | YES | NO |
|---|---|---|
| The preparer | | |
| - Powered down system. | ____ | ____ |
| - Identified malfunctioning or upgraded memory IC's. | ____ | ____ |
| - Replaced malfunctioning memory IC. | ____ | ____ |
| - Inserted replacement or upgraded IC on motherboard. | ____ | ____ |
| - Reassembled CPU and reconnected AC power cord. | ____ | ____ |
| - Conducted motherboard RAM and ROM operational test checks | ____ | ____ |

GUIDE SHEET

DUTY: Servicing Computer Equipment

---

PERFORMANCE OBJECTIVE #107

TASK: Install field type product line.

STANDARD OF PERFORMANCE OF TASK:

System must be upgraded to include most current manufacturing changes.

SOURCE OF STANDARD:

Writing team of incumbent workers.

CONDITIONS FOR PERFORMANCE OF TASK:

System to be serviced
Manufacturing field upgrade information
Field upgrade parts
Tool kit

ENABLING OBJECTIVES:

1. Interpret field upgrade information.
2. Prepare unit for acceptance of product.
3. Install field upgrade and check operation of upgrade.

*RESOURCES:

1. Installation/operation/maintenance manuals.
2. Sample of field upgrade information.
3. Equipment history file.
4. Checklist - Installing field upgrade.

TEACHING ACTIVITIES:

1. Present lecture from operation or installation manual on the upgrade product line to be installed. (*1 & 2)
2. Conduct hands on demonstration on installation of a field upgrade. (*1)
3. Present lecture on how to record upgrade information in the equipment history file. (*1 & 3)
4. Instruct student to interpret field upgrade information.
5. Instruct student to install a field upgrade. (*4)

CRITERION-REFERENCED MEASURE:

The student will install upgrade product and perform operational check. Identify type of upgrade and record it in equipment history log.

PERFORMANCE GUIDE:

1. Identify system to be upgraded.
2. Review manufacturing field upgrade information.
3. Perform system upgrade.
4. Record upgrade information in equipment history file.

CHECKLIST

DUTY Servicing Computer Equipment.

TASK Install field type product line.

ENABLER Install field upgrade and check operation of upgrade.

STUDENT'S NAME _____ DATE _____

EVALUATOR'S NAME _____ COURSE _____

TIME : STARTED _____ COMPLETED _____

TOTAL _____

DIRECTIONS TO THE EVALUATOR:

Use checklist to evaluate student performance when installing field type product line.

RECORD THIS INFORMATION:

MANUFACTURER: _____ MODEL: _____

SERIAL #: _____

| PERFORMANCE DETERMINANTS | YES | NO |
|---|---|---|
| The preparer | | |
| - identified system upgraded. | ____ | ____ |
| - Obtained field upgrade information. | ____ | ____ |
| - Interpreted field upgrade information. | ____ | ____ |
| - Performed field upgrade. | ____ | ____ |
| - Performed operational check on field upgrade. | ____ | ____ |
| - Recorded field upgrade information. | ____ | ____ |

GUIDE SHEET

DUTY: Servicing Computer Equipment

---

PERFORMANCE OBJECTIVE #108

TASK: Install remote terminals.

STANDARD OF PERFORMANCE OF TASK:

Remote terminal equipment must be operational in conjunction with the main central processing unit.

STANDARD OF PERFORMANCE:

Writing team of incumbent workers.

CONDITIONS FOR PERFORMANCE OF TASK:

Equipment to be installed
System layout
Tool kit

ENABLING OBJECTIVE:

1. Determine remote terminal equipment and install equipment into system.

RESOURCES:

1. Manufacturer's operator's manual.
2. Technical/Service manual.
3. Stephenson & Cahill. How to Maintain and Service Your Small Computer. Howard W. Sams & Co., Inc., Indianapolis, IN, 1983.
4. Component layout, wiring diagram.
5. Computer equipment catalog.
6. Checklist - Installing remote terminals.

TEACHING ACTIVITIES:

1. Present lecture on remote terminal equipment. (#3,4 & 5)
2. Conduct hands-on demonstration at a remote terminal. (#2,3, & 4)
3. Conduct class discussion on possible equipment combinations commonly found at a remote terminal.
4. Instruct student to determine and sketch a remote terminal layout based on a list of requirement provided by instructor. (#4)

TEACHING ACTIVITIES: (cont.)

5. Present lecture on remote terminal equipment installation procedures. (*1,2 & 4)
6. Conduct question and answer session on procedures. (*2,3 & 4)
7. Demonstrate remote terminal system installation.
8. Instruct student to install a remote terminal system. (*7)

CRITERION-REFERENCED MEASURE:

The student will determine remote terminal equipment to be installed, install the equipment in accordance with installation guide and perform operational test on installed equipment.

PERFORMANCE GUIDE:

1. Determine equipment needed for remote terminal:
   A. Display screen/monitor.
   B. Keyboard.
   C. Storage device.
   D. Card puncher.
   E. Card reader.
   F. Data communication device.
2. Set up remote terminal equipment and interface it with the main central processing unit.
3. Power up system and test run remote terminal equipment.

CHECKLIST

DUTY Servicing Computer Equipment

TASK Install remote terminals.

ENABLER Determine remote terminal equipment and install equipment into system.

STUDENT'S NAME _____ DATE _____

EVALUATOR'S NAME _____ COURSE _____

TIME : STARTED _____ COMPLETED _____

TOTAL _____

DIRECTIONS TO THE EVALUATOR:

Use checklist to evaluate installation of remote terminals.

| PERFORMANCE DETERMINANTS | YES | NO |
|---|---|---|
| The preparer | | |
| - Identified needed remote terminal equipment. | ____ | ____ |
| - Created remote terminal layout. | ____ | ____ |
| - Assembled needed equipment and technical manuals. | ____ | ____ |
| - Consulted technical manuals for installation procedure. | ____ | ____ |
| - Installed all remote terminal equipment and interfaced it with main central processing unit. | ____ | ____ |
| - Powered up remote terminal system and conducted an operational check. | ____ | ____ |
| - Readied remote terminal system to pass operational check. | ____ | ____ |

GUIDE SHEET

DUTY: Servicing Computer Equipment

---

PERFORMANCE OBJECTIVE #109

TASK: Install electrical wiring.

STANDARD OF PERFORMANCE OF TASK:

Electrical wiring must provide the amount of current, type of outlet, and safety precautions needed to operate the system; system will power up.

SOURCE OF STANDARD:

Writing team of incumbent workers.
How TO Maintain And Service Your Small Computer.

CONDITIONS FOR PERFORMANCE OF TASK:

Electrical wire
Wire strippers
Electrician pliers
Dies (wire cutters)
Tool kit

ENABLING OBJECTIVE:

1. Install proper wiring for system connections.
2. Connect system and perform power up check.

*RESOURCES:


1. National Electrical Code 1984, NFPA No. 70-1984. National Five Protection Association, Boston, MA, 1984.
2. Time Life Books. Electrical Wiring. Home Repair And Improvement Series. Time Life Books, Inc., Alexandria, VA, 1980.
3. Art Margolis. Troubleshooting And Repairing Your Personal Computers. Tab Books Inc., Blue Ridge Summit, PA, 1983.
4. Stephenson & Cahill. How to Maintain and Service Your Small Computer. Howard W. Sams & Co., Inc., Indianapolis, IN, 1983.
5. Art Margolis. Computer Technicians Handbook 2nd Edition. Tab Books Inc., Blue Ridge Summti, PA, 1985.

RESOURCES: (cont.)

6. Art Margolis. Computer User's Guide to Electronics. Tab Books Inc., Blue Ridge Summit, PA, 1985.
7. Encyclopedia of Electronics. Tab Professional and Reference Books, Tab Books Inc., Blue Ridge Summit, PA, 1985.
8. Technical/Service Manual.
9. Visual aid-Electrical wiring.
10. Checklist - Install electrical wiring.

TEACHING ACTIVITIES:

1. Present lecture on the National Electrical Codes. (#1)
2. Conduct class discussion on electrical wiring design, protection, methods and materials. (#1,2,3,4,5,6,7 & 8)
3. Conduct class discussion on types of electrical equipment such as cords. cables, plugs, receptacles ect. (#1,2 & 8)
4. Perform hands-on demonstration of wiring design, protection, methods and materials.
5. Present lecture on power requirements for computer equipment. (#1,2,7 & 9)
6. Conduct class discussion on voltage, voltage regulation and amperage utilized by computer equipment.
7. Conduct class discussion on power surges and power surge protection.
8. Present lecture on safety precautions when working with electricity.
9. Demonstrate electrical safety procedures/practices.
10. Instruct student to design a electrical wiring diagram/layout based on mock computer system information provided by instructor.
11. Instruct student to perform a dry run wiring for the wiring diagram/layout they have designed. (#10)

CRITERION-REFERENCED MEASURE:

Student will be able to determine computer equipments power requirements, design a electrical wiring diagram/layout, install the electrical wiring for the computer system and perform a power check before computer equipment is connect to the electrical wiring.

PERFORMANCE GUIDE:

1. Determine type of system to be used.
2. Determine system's electrical requirements:
   A. Voltage needed.
   B. Type of receptacles.
   C. Type of grounding.

PERFORMANCE GUIDE: (cont.)

D. Type of fuse panel.
E. Type of circuit.
F. Gauge of wire.

3. Determine other electrical needs:
   A. Lights.
   B. Heating and cooling.
   C. Ventilation.
4. Map or diagram the electrical system.
5. Run electrical wiring as determined by system's electrical needs.
6. Conduct voltage tests at each receptacle.
7. Connect system's AC power cords and power system.

# TYPES OF WIRING

No. 6 55 Amperes

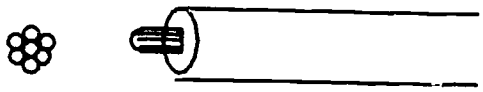

No. 8 40 Amperes

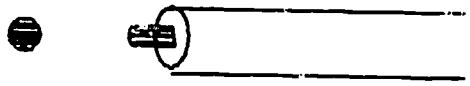

No. 10 30 Amperes

No. 12 20 Amperes

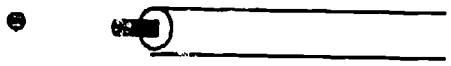

No. 14 15 Amperes

No. 16 10 Amperes

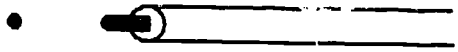

No. 18 7 Amperes

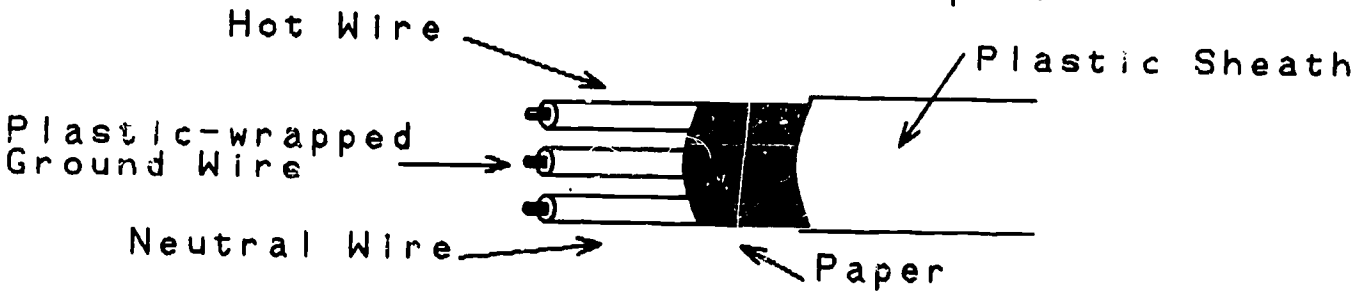


Plastic-sheathed Cable

CHECKLIST

DUTY Servicing Computer Equipment

TASK Install electrical wiring.

ENABLER Determine electrical needs and install electrical wiring.

STUDENT'S NAME _____ DATE _____

EVALUATOR'S NAME _____ COURSE _____

TIME : STARTED _____ COMPLETED _____

TOTAL _____

DIRECTIONS TO THE EVALUATOR:

Use checklist to evaluate installation of electrical wiring.

| PERFORMANCE DETERMINANTS | YES | NO |
|---|---|---|
| The preparer | | |
| - Identified the type of system to be used. | ____ | ____ |
| Identified the system's electrical requirements. | ____ | ____ |
| Identified other electrical requirements. | ____ | ____ |
| - Made a map or diagram of the electrical system. | ____ | ____ |
| - Ran electrical wiring as indicated on map or diagram. | ____ | ____ |
| - Conducted voltage tests at all receptacles. | ____ | ____ |
| - Connected all power cables and conducted system power check. | ____ | ____ |

GUIDE SHEET

DUTY: Servicing Computer Equipment

---

PERFORMANCE OBJECTIVE #110

TASK: Install keys on keyboard.

STANDARD OF PERFORMANCE OF TASK:

Each key switch on keyboard must transmit its designated signal to the central processing unit.

SOURCE OF STANDARD:

Writing team of incumbent workers.
How To Maintain and Service Your Small Computer.
Apple Technical Manual.

CONDITIONS FOR PERFORMANCE OF TASK:

Keyboard to be serviced
Replacement keys
Soldering tool
Solder sucker
Solder
Tool kit

ENABLING OBJECTIVE:

1. Disassemble unit and remove keyboard.
2. Determine key switches to be replaced.
3. Replace key switches and reassemble unit.

*RESOURCES:

1. Computer Facts. Howard W. Sams and Company, Inc., Indianapolis, IN .
2. Stephenson and Cahill. How To Maintain and Service Your Small Computer. Howard W. Sams and Company, Inc., Indianapolis, IN , 1983 .
3. Manufacturer's operating manual .
4. Manufacturer's technical reference manual .
5. Manufacturer s service manual.
6. Checklist - Key installation.

TEACHING ACTIVITIES:

1. Present lecture on types of keyboards. (*1,2,3,4 & 5)

TEACHING ACTIVITIES: (cont.)

2. Discuss stand alone on board keyboards.
3. Conduct question and answer session on keyboard for specific systems.
4. Present lecture on methods of keyswitch fastening. (#1,2 & 5)
5. Discuss screw fastened, snap-on, and sealed (unremovable) keyswitches.
6. Demonstrate procedure for removing and replacing keyswitch.
7. Conduct seminar on proper soldering techniques.
8. Demonstrate procedure for desoldering, and soldering keyswitch connector pins.
9. Instruct student to practice proper soldering and desoldering procedures.
10. Instruct student to remove and replace a keyswitch on a keyboard.

CRITERION-REFERENCED MEASURE:

The student will determine type of keyswitch fastening, type of repair needed, remove and replace malfunctioning keyswitch, and perform checkout procedures to insure repair of malfunction.

PERFORMANCE GUIDE:

1. Determine type of keyswitch on keyboard to be serviced:
   A. Screw-on
   B. Snap-on
   C. Sealed (unremovable) switch
2. Identify malfunctioning key.
3. Remove malfunctioning keyswitch assembly:
   A. Screw fasten keyswitch:
      1. Turn keyboard over and locate keyswitch to be removed.
      2. Desolder the connector pins on the back of the keyboard.
         NOTE: Do not apply the soldering tool to the back of the keyboard for more than three seconds at a time or damage to the tracers could occur.
      3. Remove keyswitch retaining screw.
      4. Turn keyboard right-side up and pull upon key cap/cover to remove assembly.
   B. Snap-on keyswitch:
      1. Turn keyboard over and locate keyswitch to be removed.
      2. Desolder the contact pins on the back of the keyboard.
      3. Turn keyboard over and remove key cap/cover.

PERFORMANCE GUIDE: (cont.)

4. Pinch the two clips on the keyswitch together and pull upon the keyswitch assembly to remove.

4. Replace keyswitch assembly:
   A. Screw-on keyswitch:
      1. Place keyswitch assembly onto keyboard with the contact pins through the holes.
      2. Hold keyswitch assembly with one hand and turn keyboard over.
      3. Replace keyswitch assemb[illegible]aining screw.
      4. Resolder contact pin to pad on back of keyboard.
      5. Check soldered joint to make sure that the hole has completely filled with solder and that solder is built up around pin.
   B. Snap-on keyswitch assembly:
      1. Thread the contact pins through the holes and snap the keyswitch assembly into place on the keyboard.
      2. Replace the key cap and turn keyboard over.
      3. Resolder contact pins to the pad on the back of the keyboard.
      4. Check the soldered joint to make sure that the holes are filled with solder and that the pins are covered.
      5. Test key for designated signal.

CHECKLIST

DUTY Servicing Computer Equipment

TASK Install keys on keyboard.

ENABLER Remove and replace keyswitch.

STUDENT'S NAME _____ DATE _____

EVALUATOR'S NAME _____ COURSE _____

TIME : STARTED _____ COMPLETED _____

TOTAL _____

DIRECTIONS TO THE EVALUATOR:

Use checklist to evaluate removing and replacing keyswitch.

| PERFORMANCE DETERMINANTS | YES | NO |
|---|---|---|
| The preparer | | |
| - Identified type of keyswitch. | ____ | ____ |
| - Identified malfunctioning keyswitch. | ____ | ____ |
| - Made keyboard accessible. | ____ | ____ |
| - Desoldered keyswitch connector pins. | ____ | ____ |
| - Removed malfunctioning keyswitch. | ____ | ____ |
| - Put replacement keyswitch in place. | ____ | ____ |
| - Aligned and resoldeded keyswitch connector pins. | ____ | ____ |
| - Checked soldered joints to insure that the holes were filled and pins were covered. | ____ | ____ |
| - Checked replacement key for designated signal. | ____ | ____ |
| - Returned keyboard to original position. | ____ | ____ |

GUIDE SHEET

DUTY: Servicing Computer Equipment

---

PERFORMANCE OBJECTIVE #111

TASK: Repair keyboard.

STANDARD OF PERFORMANCE OF TASK:

Keyboard must transmit signals to the central processing unit.

SOURCE OF STANDARD:

Writing team of incumbent workers.
How To Maintain and Service Your Small Computer.

CONDITIONS FOR PERFORMANCE OF TASK:

Keyboard to be serviced
Replacement parts
Tool kit

ENABLING OBJECTIVE:

1. Disassemble unit, remove keyboard, remove and replace malfunctioning part, reassemble keyboard and unit.
2. Perform checklist to insure proper outputs.

*RESOURCES:

1. Computer Facts. Howard W. Sams and Company, Inc., Indianapolis, IN .
2. Stephenson and Cahill. Hoe To Maintain and Service Your Small Computer. Howard W. Sams and Company, Inc., Indianapolis, IN , 1983.
3. Manufacturer's operator's manual.
4. Manufacturer's technical reference.
5. Manufacturer's service manual.
6. Schematic of keyboard.
7. Visual aid - Keyboard repair.
8. Checklist - Keyboard repair.

TEACHING ACTIVITIES:

1. Present lecture on keyboard operations. (*1,2,3,4 & 5)
2. Conduct question and answer session on keyboard operation.

TEACHING ACTIVITIES: (cont.)

3. Present lecture on keyswitch assembly.
4. Discuss the repairable parts of a keyboard.
5. Provide students with an expanded drawing of the different parts of a keyboard and a schematic of keyboard.
6. Discuss repairing procedures for keyswitch assemblies, pad tracers, message wires, decoder chips, cables and cable connectors.
7. Discuss sources for replacement parts.
8. Perform hands on demonstration for replacement of malfunctioning unit parts.
9. Present lecture on electrical connections to keyboard.
10. Assign student a malfunctioning keyboard, a keyboard schematic and a parts catalog.
11. Instruct student to identify the malfunctioning part, repair or replace malfunctioning part and test keyboard to insure repair was successful.

CRITERION-REFERENCED MEASURE:

The student will identify malfunctioning part, repair or remove and place part and perform an operational check on keyboard to insure that it functions properly. Keyboard must pass operational check without error.

PERFORMANCE GUIDE:

1. Obtain keyboard to be repaired.
2. Identify malfunctioning or broken part:
   A. Keyswitch assembly:
      1. Key cap/cover.
      2. Key contents.
      3. Key base.
      4. Key spring.
      5. Contact pins.
   B. Pad tracers.
   C. Message wires.
   D. Decoder chips.
   E. Cables and cable connectors.
3. Replace malfunctioning part with new replacement part.
4. Test keyboard for correct signal output.

# TYPICAL KEYBOARD REPAIR

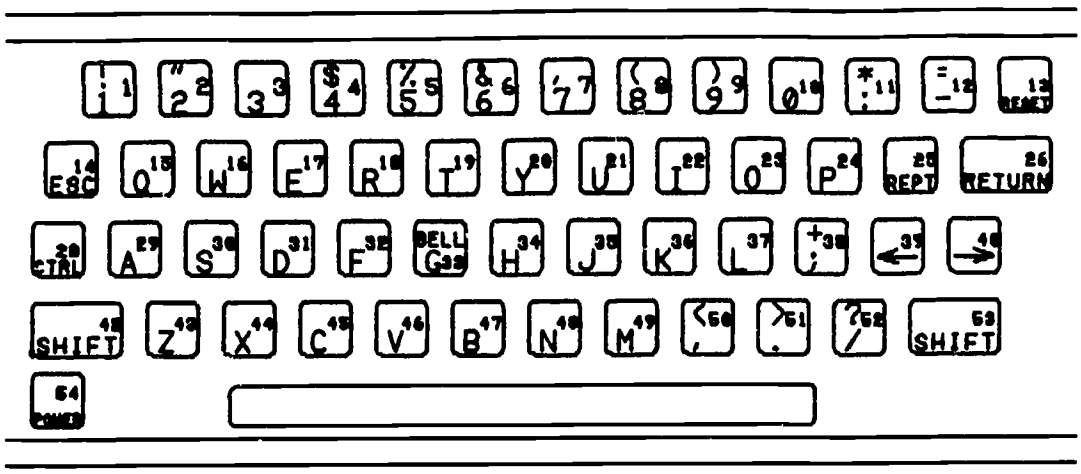


Keyswitches are numbered on the back of the keyboard as shown above.

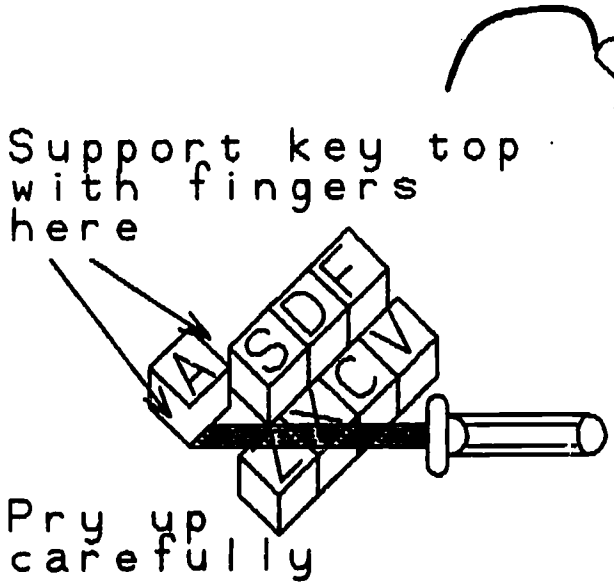


REMOVING KEY CAPS

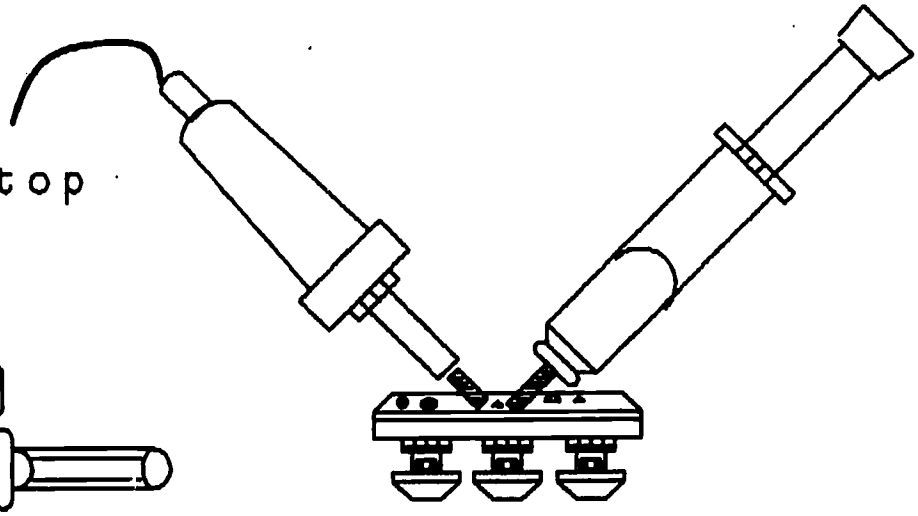

REMOVING KEYSWITCH

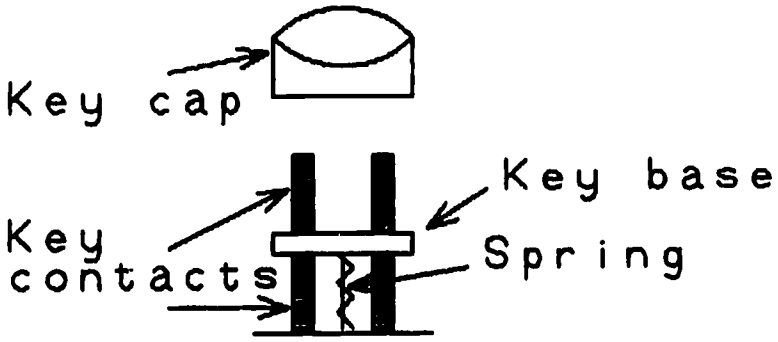


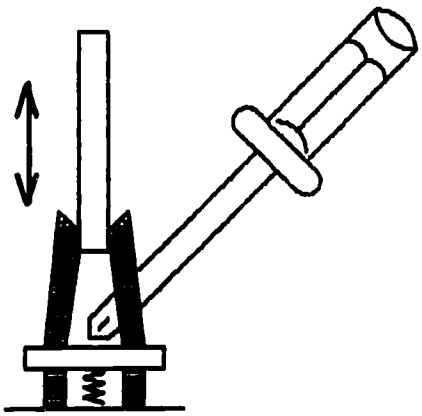

CLEANING KEY CONTACTS

CHECKLIST

DUTY Servicing Computer Equipment.

TASK Repair keyboard.

ENABLER Remove, repair and replace keyboard.

STUDENT'S NAME _____ DATE _____

EVALUATOR'S NAME _____ COURSE _____

TIME : STARTED _____ COMPLETED _____

TOTAL _____

DIRECTIONS TO THE EVALUATOR:

Use the checklist to evaluate student performance when removing, repairing, and replacing a keyboard.

RECORD THIS INFORMATION:

MANUFACTURER: _____ MODEL: _____

SERIAL #: _____

| PERFORMANCE DETERMINANTS | YES | NO |
|---|---|---|
| The preparer | | |
| - Obtained malfunctioning unit. | ____ | ____ |
| - Disassembled unit so keyboard was accessible. | ____ | ____ |
| - Identified malfunctioning part. | ____ | ____ |
| - Removed the malfunctioning part. | ____ | ____ |
| - Repaired malfunctioning part if possible. | ____ | ____ |
| - Obtained replacement part if malfunctioning part was non-repairable. | ____ | ____ |
| - Installed repaired or replacement part in keyboard. | ____ | ____ |
| - Replaced the repaired keyboard in the unit and the reassembled unit. | ____ | ____ |
| - Performed operational check on the keyboard. | ____ | ____ |
| - Readied the keyboard to pass the operational check without errors. | ____ | ____ |

GUIDE SHEET

DUTY: Servicing Computer Equipment

---

PERFORMANCE OBJECTIVE #112

TASK: Repair motherboard.

STANDARD OF PERFORMANCE OF TASK:

Central processing unit must load and store data/information.

SOURCE OF STANDARD:

Writing team of incumbent workers.
How To Maintain and Service Your Small Computer.

CONDITIONS FOR PERFORMANCE OF TASK:

Motherboard to be serviced
Replacement parts
Tool kit

ENABLING OBJECTIVE:

1. Identify malfunctioning or broken part, disassemble unit, remove and replace malfunctioning part, and perform diagnostic check for proper function.
2. Identify internal parts of motherboard.

*RESOURCES:

1. Computer Facts. Howard W. Sams & Co., Inc., Indianapolis, IN .
2. Stephenson & Cahill. How to Maintain and Service Your Small Computer. Howard W. Sams & Co., Inc., Indianapolis, IN .
3. Manufacturer's operator's manual.
4. Manufacturer's technical reference manual.
5. Manufacturer's service manual.
6. Schematic of motherboard.
7. Block diagram of motherboard.
8. Visual aid - Motherboard components.
9. Checklist - Repairing motherboard.

TEACHING ACTIVITIES:

1. Present lecture on operations and location of motherboard. (*1,2,3,4 & 5)

TEACHING ACTIVITIES: (cont.)

2. Discuss components of a motherboard.
3. Conduct question and answer session on motherboard.
4. Provide student with an exploded diagram and schematic of the motherboard. (#6 & 9)
5. Discuss repair procedures for motherboard.
6. Perform hands on demonstration on troubleshooting and repairing of the motherboard.
7. Present lecture on soldering and component replacement techniques. (#1,2,3,4 & 5)
8. Demonstrate soldering and component replacement.
9. Present lecture on component operational checks. (#1,3,4, & 5)
10. Assign student a malfunctioning motherboard, schematic, and parts catalog.
11. Instruct student to troubleshoot the motherboard, isolate and repair or replace malfunctioning part and perform an operational check. (#7)

CRITERION-REFERENCED MEASURE:

The student will disassemble unit, repair or remove and replace malfunctioning part, reassemble unit and perform operational check. The motherboard must pass operational check without error.

PERFORMANCE GUIDE:

1. Obtain motherboard to be repaired.
2. Identify malfunctioning or broken part:
   A. Resistors.
   B. Capacitors.
   C. Transistors.
   D. Integrated circuits.
   E. Diodes.
   F. Circuit boards/cards.
   G. Traces.
   H. Cables and cable connector.
   I. Rectifiers.
   J. Transformers.
   K. Switches.
3. Replace malfunctioning or broken part with a new replacement part.
4. Perform motherboard diagnostic test to check if motherboard functioning correctly.

# MOTHERBOARD COMPONENT IDENTIFICATION

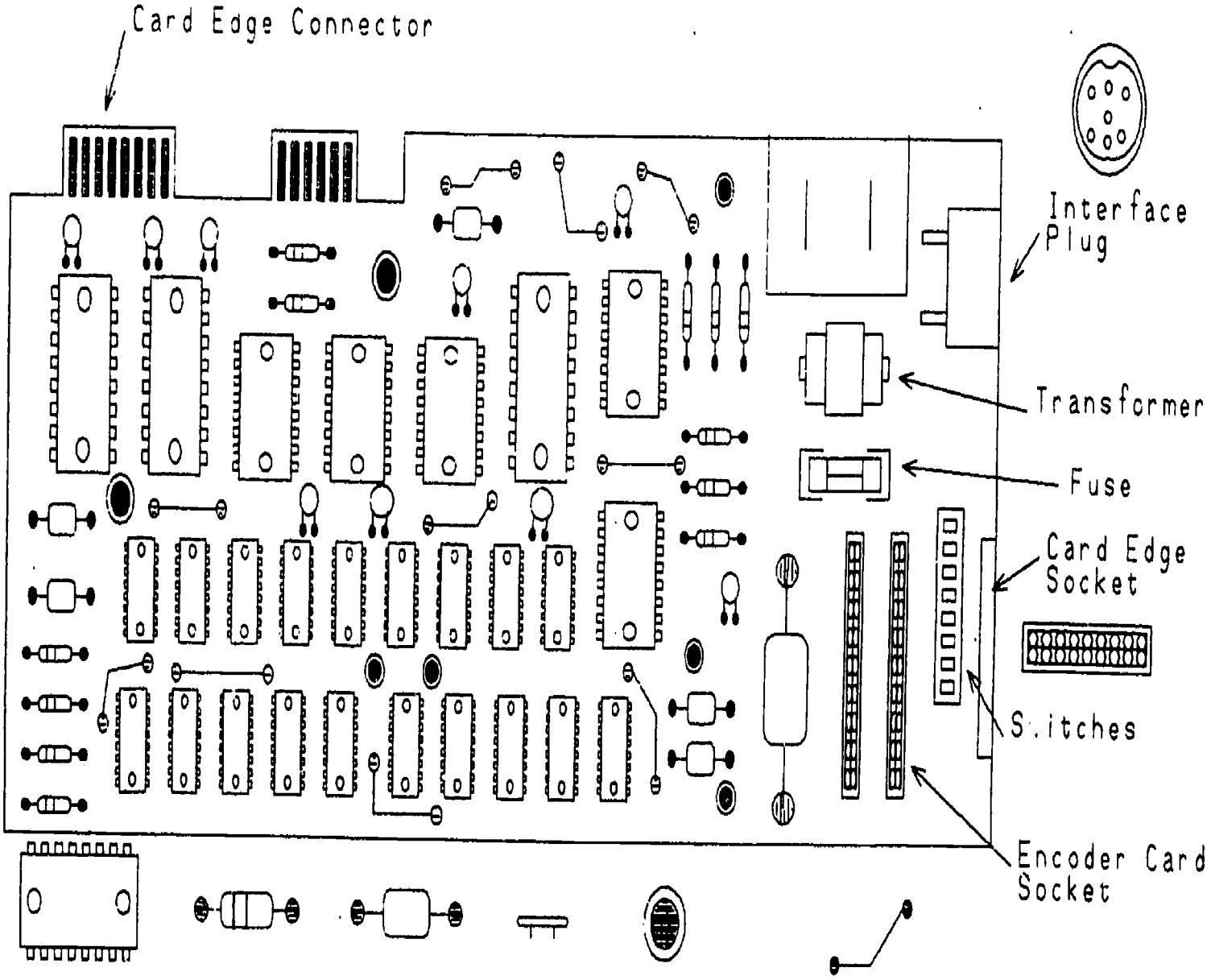


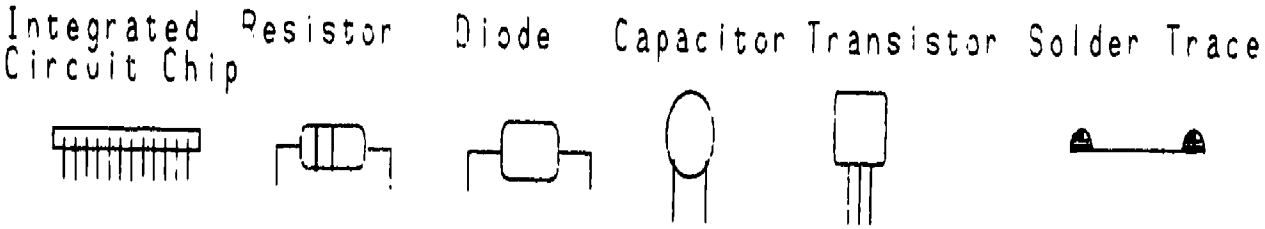

CHECKLIST

DUTY Servicing Computer Equipment

TASK Repair motherboard.

ENABLER Troubleshoot and repair motherboard.

STUDENT'S NAME _____ DATE _____

EVALUATOR'S NAME _____ COURSE _____

TIME : STARTED _____ COMPLETED _____

TOTAL _____

DIRECTIONS TO THE EVALUATOR:

Use checklist to evaluate troubleshooting and repairing the motherboard.

| PERFORMANCE DETERMINANTS | YES | NO |
|---|---|---|
| The preparer | | |
| - Obtained malfunctioning unit. | ____ | ____ |
| - Dissassembled unit so that the motherboard was accessible. | ____ | ____ |
| - Identified and located malfunctioning component on the motherboard. | ____ | ____ |
| - Removed and repaired the malfunctioning component if possible. | ____ | ____ |
| - Identified replacement part if the malfunctioning part was non-repairable. | ____ | ____ |
| - Installed the repaired or new part on the motherboard. | ____ | ____ |
| - Returned the motherboard to its original position and reassembled the unit. | ____ | ____ |
| - Performed an operational check. | ____ | ____ |
| - Readied the unit to pass the operational check without error. | ____ | ____ |

GUIDE SHEET

DUTY: Servicing Computer Equipment

---

PERFORMANCE OBJECTIVE #113

TASK: Repair analog board.

STANDARD OF PERFORMANCE OF TASK:

Analog board must convert digital outputs into analog values.

SOURCE OF STANDARD:

Writing team of incumbent workers.
How To Maintain and Service Your Small Computer.

CONDITIONS FOR PERFORMANCE OF TASK:

Analog board to be serviced
Replacement parts
Tool kit

ENABLING OBJECTIVE:

1. Identify malfunctioning or broken part, disassemble unit remove and replace malfunctioning part and perform diagnostic check for proper function.
2. Identify internal parts of analog board.

*RESOURCES:

1. Computer Facts. Howard W. Sams & Co., & Inc., Indianapolis, IN .
2. Stephenson & Cahill. How to Maintain and Service Your Small Computer. Howard W. Sams & Co., Inc., Indianapolis, IN .
3. Manufacturer's operator's manual.
4. Manufacturer's technical reference manual.
5. Manufacturer's service manual.
6. Schematic of analog board.
7. Block diagram of analog board.
8. Visual aid - Analog board components.
9. Checklist - Repair analog board.

TEACHING ACTIVITIES:

1. Present lecture on the operation and location of analog board. (*1,2,3,4 & 5)

TEACHING ACTIVITIES: (cont.)

2. Discuss components of an analog board.
3. Conduct question and answer session on analog board.
4. Provide student with an exploded diagram and schematic of the analog board. (#6 & 9)
5. Discuss repair procedures for analog board.
6. Perform hands on demonstration on troubleshooting and repairing of the analog board.
7. Present lecture on soldering and component replacement techniques. (#1,2,3,4 & 5)
8. Demonstrate soldering and component replacement.
9. Present lecture on component operational checks. (#1,3,4 & 5)
10. Assign student a malfunctioning analog board, schematic, and parts catalog.
11. Instruct student to troubleshoot the motherboard, isolate and repair or replace malfunctioning part and perform an operational check. (#7)

CRITERION-REFERENCED MEASURE:

The student will disassemble unit, repair or replace malfunctioning part, reassemble unit and perform an operational check. The analog board must pass operational check without error.

PERFORMANCE GUIDE:

1. Obtain analog board to be repaired.
2. Identify malfunctioning or broken part:
   A. Resistors.
   B. Capacitors.
   C. Buffers.
   D. Integrated circuits.
   E. Convertors.
   F. Circuit boards/cards.
   G. Traces.
   H. Soldered connections.
   I. Cable and cable connectors.
   J. Analog multiplexers.
   K. Rf modulator.
   L. PIA (Peripheral Interface Adapter).
   M. VDG (Video Display Adapter).
3. Replace malfunctioning or broken part with a new replacement part.
4. Perform diagnostic tests to determine if the analog board is functioning.

# ANALOG BOARD COMPONENT IDENTIFICATION

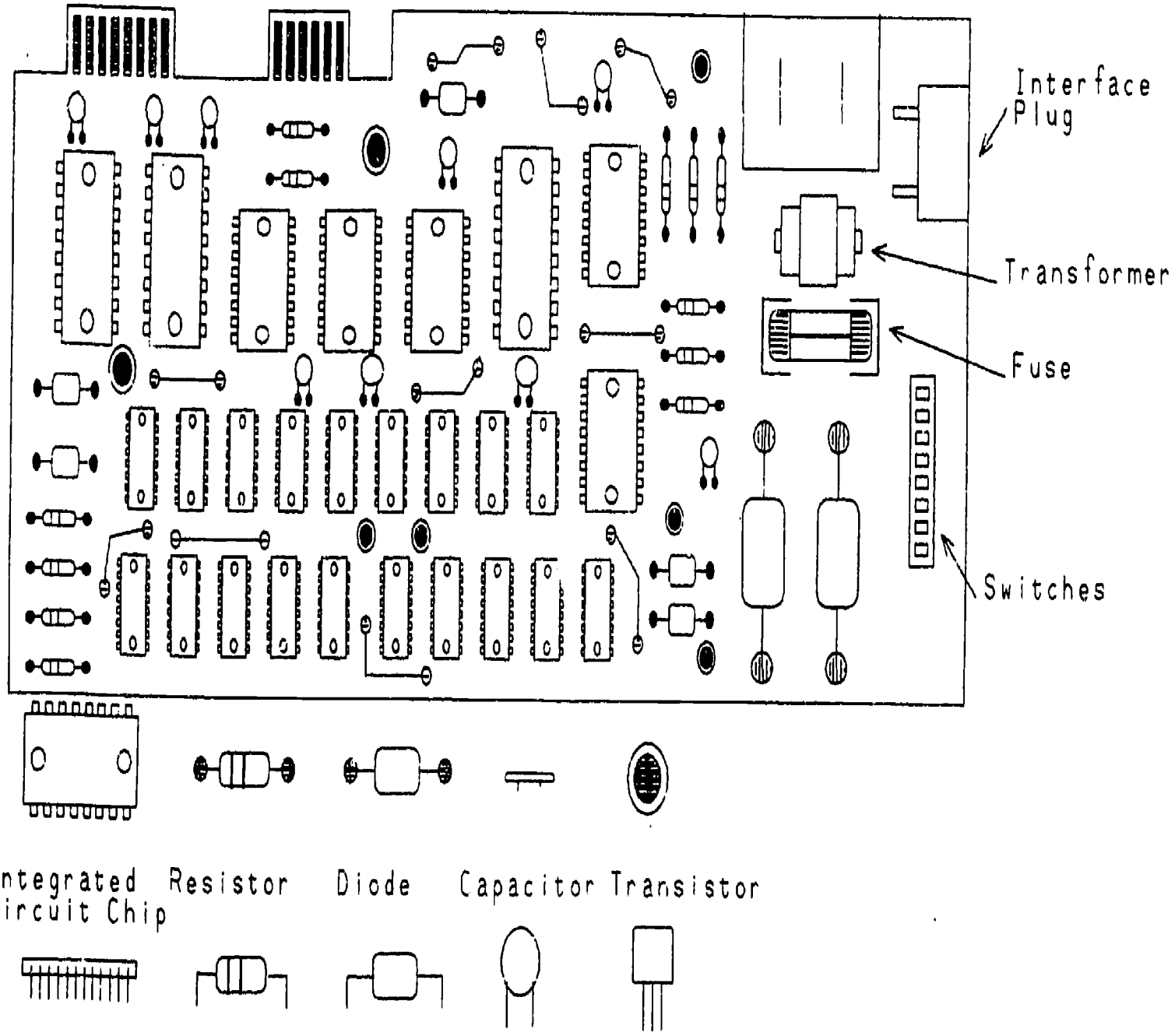

CHECKLIST

DUTY Servicing Computer Equipment

TASK Repair analog board.

ENABLER Troubleshoot and repair analog board.

STUDENT'S NAME _____ DATE _____

EVALUATOR'S NAME _____ COURSE _____

TIME : STARTED _____ COMPLETED _____

TOTAL _____

DIRECTIONS TO THE EVALUATOR:

Use the checklist to evaluate troubleshooting and repairing the analog board.

| PERFORMANCE DETERMINANTS | YES | NO |
|---|---|---|
| The preparer | | |
| - Obtained the malfunctioning unit. | ____ | ____ |
| - Disassembled the unit so that the analog board was accessible. | ____ | ____ |
| - Identified and located the malfunctioning component on the analog board. | ____ | ____ |
| - Removed and repaired the malfunctioning component and if possible. | ____ | ____ |
| - Identified replacement part if malfunctioning part was non-repairable. | ____ | ____ |
| - Installed the repaired or new part on the analog board. | ____ | ____ |
| - Returned analog board to its original position and reassembled unit. | ____ | ____ |
| - Performed an operational check. | ____ | ____ |
| - Readied the unit pass the operational check without error. | ____ | ____ |

GUIDE SHEET

DUTY: Servicing Computer Equipment

---

PERFORMANCE OBJECTIVE #114

TASK: Repair disk drive assembly.

STANDARD OF PERFORMANCE OF TASK:

Disk drive must be functional; drive will read, write and verify.

SOURCE OF STANDARD:

Writing team of incumbent workers.
How To Maintain and Service Your Small Computer.

CONDITIONS FOR PERFORMANCE OF TASK:

Disk drive to be serviced
Replacement parts
Tool kit

ENABLING OBJECTIVE:

1. Disassemble disk drive, replace malfunctioning parts, and reassemble drive.
2. Identify internal components of drive.

*RESOURCES:

1. Computer Facts. Howard W. Sams & Co., Inc., Indianapolis, IN.
2. Stephenson & Cahill. How to Maintain and Service Your Small Computer. Howard W. Sams & Co., Inc., Indianapolis, IN .
3. Manufacturer's operator's manual.
4. Manufacturer's DOS manual.
5. Manufacturer's technical reference manual.
6. Manufacturer's service manual.
7. Schematic of disk drive.
8. Visual aid - Disk drive assembly, see performance objective 76.
9. Checklist - Repair disk drive assembly.
10. Worksheet - Disk drive assembly component identification.

TEACHING ACTIVITIES:

1. Present lecture on operation of disk drive. (*1,2,3,4,5 & 6)

TEACHING ACTIVITIES: (cont.)

2. Present lecture on internal components of disk drive. (1,2 & 3)
3. Discuss different components making up drive unit.
4. Conduct class discussion on internal workings of disk drive.
5. Identify tools necessary to disassemble, repair and reassemble unit.
6. Present lecture on component repair procedures. (1,2,3,4 & 5)
7. Demonstrate disk drive component repair procedures.
8. Assign student a malfunctioning disk drive unit, a schematic and a parts catalog.
9. Instruct student to troubleshoot and repair the drive unit.

CRITERION-REFERENCED MEASURE:

The student will disassemble and troubleshoot disk drive, find malfunctioning part, remove and replace part, reassemble disk drive, and perform operational check. Drive unit must be able to read, write and verify disk.

PERFORMANCE GUIDE:

1. Obtain disk drive to be serviced.
2. Identify malfunctioning part:
   A. Head stepper motor.
   B. Head load arm.
   C. Head load pad.
   D. Head.
   E. Head carriage.
   F. Index sector light source.
   G. Write-protect switch.
   H. Activity indicator light.
   I. Index sector pickup.
   J. Clamping hub.
   K. Spindle.
   L. Head carriage rails.
   M. Drive motor.
   N. Disk ejector mechanism.
3. Replace malfunctioning part with a new part.
4. Test drive to insure it will read/write and verify.

TITLE: DISK DRIVE ASSEMBLY

DIRECTIONS: Fill in the component name indicated by the arrow.

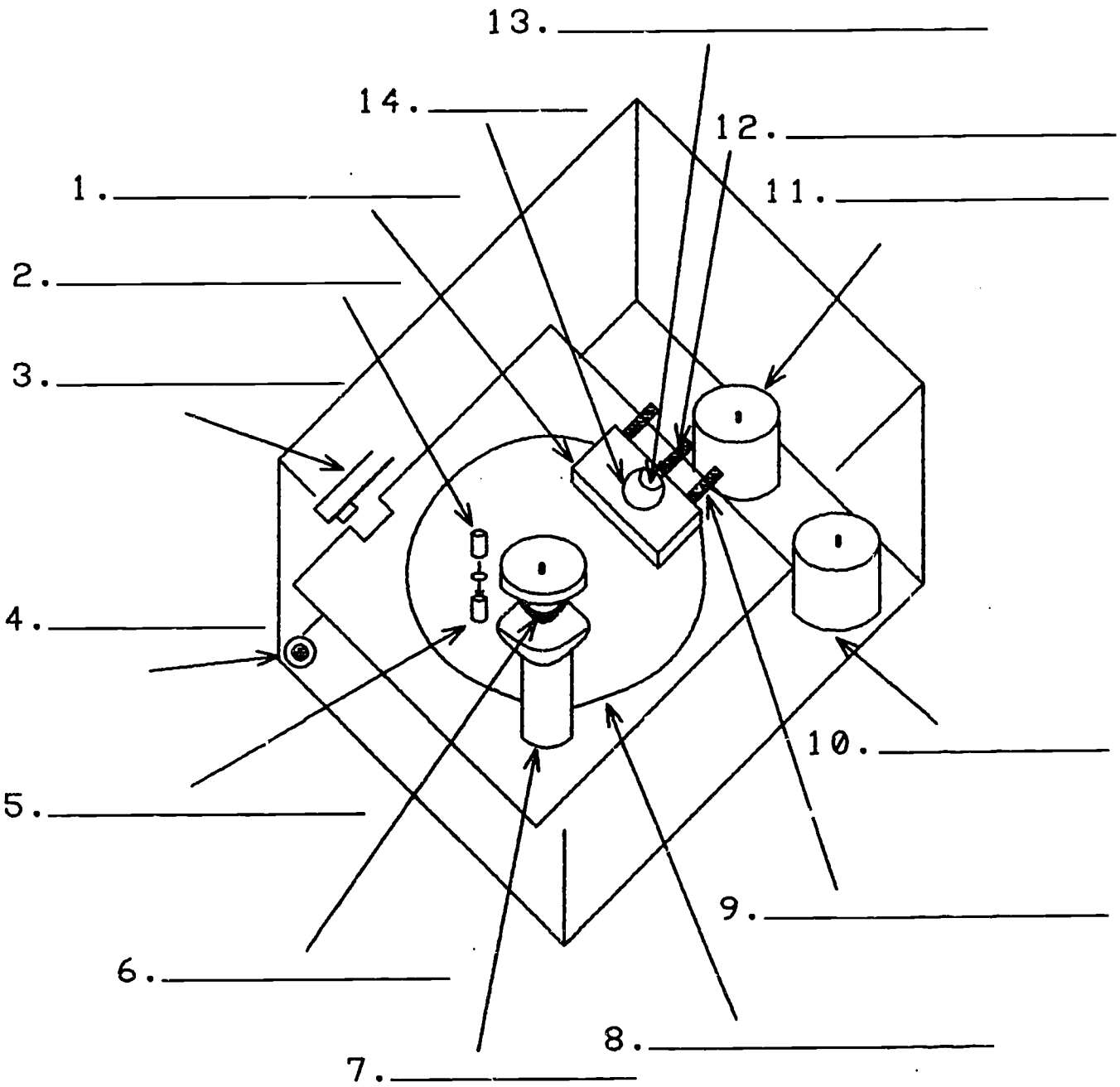

STUDENT WORKSHEET ANSWERS

1. Head carriage
2. Index sector light source
3. Write-protect switch
4. Activity indicator
5. Index sector pickup
6. Clamping hub
7. Spindle
8. Disk in position
9. Head carriage rails
10. Drive motor
11. Head stepper motor
12. Head load arm
13. Head load pad
14. Head

CHECKLIST

DUTY Servicing Computer Equipment

TASK Repair disk drive assembly.

ENABLER Troubleshoot and repair disk drive assembly.

STUDENT'S NAME _____ DATE _____

EVALUATOR'S NAME _____ COURSE _____

TIME : STARTED _____ COMPLETED _____

TOTAL _____

DIRECTIONS TO THE EVALUATOR:

Use checklist to evaluate troubleshooting and repairing disk drive assembly.

| PERFORMANCE DETERMINANTS | YES | NO |
|---|---|---|
| The preparer | | |
| - Obtained the faulty disk drive unit. | ____ | ____ |
| - Assembled the drive unit. | ____ | ____ |
| - Isolated the malfunctioning component. | ____ | ____ |
| - Removed and repaired malfunctioning component if possible. | ____ | ____ |
| - Identified replacement part if malfunctioning part was non-repairable. | ____ | ____ |
| - Installed repaired or replacement part in the drive unit. | ____ | ____ |
| - Reassembled drive unit. | ____ | ____ |
| - Conducted an operational check on the disk drive unit. | ____ | ____ |

GUIDE SHEET

DUTY: Servicing Computer Equipment

---

PERFORMANCE OBJECTIVE #115

TASK: Repair logic assembly.

STANDARD OF PERFORMANCE OF TASK:

Logic assembly must interpret and manipulate digital logic signals being processed by the central processing unit.

SOURCE OF STANDARD:

Writing team of incumbent workers.
Troubleshooting and Repairing Personal Computers.

CONDITIONS FOR PERFORMANCE OF TASK:

Logic assembly to be serviced
Replacement parts
Tool kit

ENABLING OBJECTIVE:

Troubleshoot logic assembly for malfunctioning parts and perform diagnostic tests for operation of logic assembly.

*RESOURCES:

1. Computer Facts. Howard W. Sams and Company, Inc., Indianapolis, IN ,
2. Manufacturer's operational manual.
3. Manufacturer's DOS manual.
4. Manufacturer's technical reference manual.
5. Schematic of logic assembly.
6. Visual aid - Logic assembly components.
7. Checklist - Repair logic system.

TEACHING ACTIVITIES:

1. Present lecture on troubleshooting components. (*1,2,3 & 4)
2. Discuss the components in a logic assembly.
3. Perform hands on demonstration-troubleshooting components in logic system.

TEACHING ACTIVITIES: (cont.)

4. Present lecture on diagnostic checks. (#1,2,3,4 & 5)
5. Conduct question/answer session on troubleshooting.
6. Present lecture on current flow in logic assembly. (#5)
7. Present lecture on logic assembly repair procedures. (#1,2,3,4 & 5)
8. Demonstrate logic assembly repair procedures.
9. Instruct students to repair a logic assembly.

CRITERION-REFERENCED MEASURE:

Student will troubleshoot logic assembly, remove and replace malfunctioning part(s) and perform diagnostic test for proper operations.

PERFORMANCE GUIDE:

1. Obtain logic assembly to be serviced.
2. Identify malfunctioning or broken part:
   A. Peripheral card sockets.
   B. Peripheral equipment parts.
   C. Speaker.
   D. Cables and cable connectors.
   E. Encoder.
   F. Integrated circuit chips.
   G. Integrated circuit chip sockets.
   H. Tracers.
   I. Capacitors.
   J. Transistors.
   K. Diodes.
   L. Resistors.
3. Replace malfunctioning or broken part with a new replacement part.
4. Perform diagnostic tests to check if logic assembly is functional.

LOGIC ASSEMBLY COMPONENT IDENTIFICATION

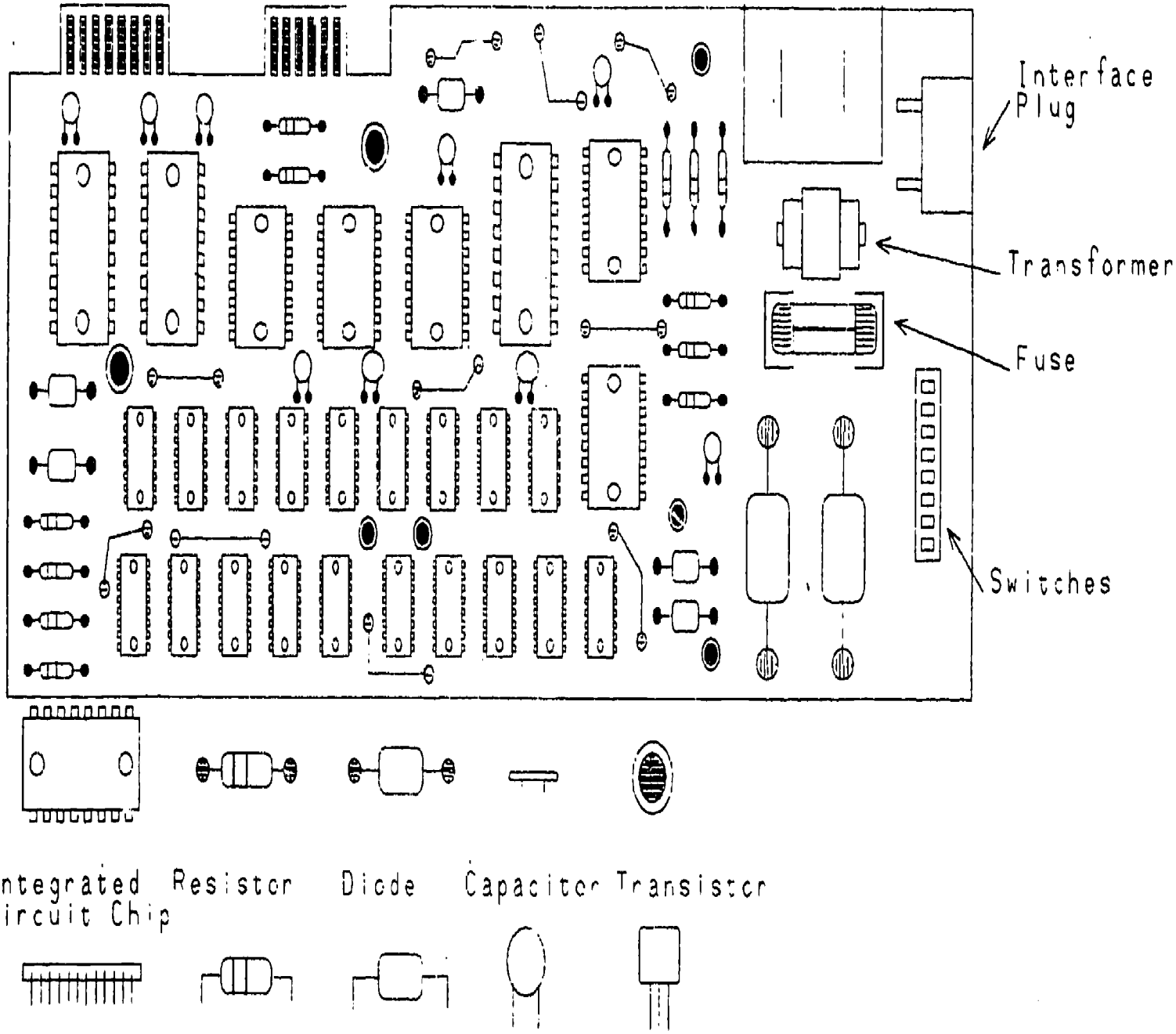

CHECKLIST

DUTY Servicing Computer Equipment.

TASK Repair logic assembly.

ENABLER Logic assembly must interpret and manipulate digital logic signals being processed by the central processing unit.

STUDENT'S NAME _____ DATE _____

EVALUATOR'S NAME _____ COURSE _____

TIME : STARTED _____ COMPLETED _____

TOTAL _____

DIRECTIONS TO THE EVALUATOR:

Use the following checklist to evaluate student performance while repairing logic assembly.

RECORD THIS INFORMATION:

MANUFACTURER: _____ MODEL: _____

SERIAL #: _____

| PERFORMANCE DETERMINANTS | YES | NO |
|---|---|---|
| The preparer | | |
| - Obtained faulty logic assembly. | ____ | ____ |
| - Identified malfunctioning or broken parts. | ____ | ____ |
| - Removed and repaired malfunctioning parts. | ____ | ____ |
| - Conducted a operational check on the logic system. | ____ | ____ |
| - Performed a diagnostic test to determine if logic assembly is functional. | ____ | ____ |

GUIDE SHEET

DUTY: Servicing Computer Equipment

---

PERFORMANCE OBJECTIVE #116

TASK: Repair on-off switch.

STANDARD OF PERFORMANCE OF TASK:

Off-on Switch must be operational; equipment will power up when switch is turned on.

SOURCE OF STANDARD:

Writing team of incumbent workers.
Handbook Of Computer Maintenance and Troubleshooting.

CONDITIONS FOR PERFORMANCE OF TASK:

Equipment to be serviced
Replacement parts
Tool kit

ENABLING OBJECTIVE:

1. Identify type of switch.
2. Identify malfunctioning component(s) and repair or replace it.

*RESOURCES:

1. Computer Facts. Howard W. Sams and Company, Inc., Indianapolis, IN .
2. Stephenson and Cahill. How To Maintain and Service Your Small Computer. Howard W. Sams and Company, Inc., Indianapolis, IN , 1983.
3. Byron Maguire. Handbook of Computer Maintenance and Troubleshooting. Reston Publishing Company, Inc., Reston, VA , 1973.
4. Stan Gibilisco. Encyclopedia of Electronics. Tab Professional and Reference Books, Tab Books Inc., Blue Ridge Summit, PA , 1985.
5. Manufacturer's operators manual.
6. Manufacturer's technical reference manual.
7. Manufacturer's service manual.
8. Visual Aid - Types of switches, see performance objective 80.
9. Checklist - Switch repair.

TEACHING ACTIVITIES:

1. Present a lecture on the different types of switches. (# 1,2,3,4 & 5)
2. Discuss the components of a switch.
3. Discuss troubleshooting procedures for a switch.
4. Demonstrate troubleshooting procedures for a switch.
5. Present a lecture on repair procedures for a switch. (#1,2,3,4,5,6 & 7)
6. Discuss repair procedures for a switch.
7. Demonstrate repair procedures for a switch.
8. Demonstrate testing procedures for a switch.
9. Instruct student to repair a switch and perform an optional check.

CRITERION-REFERENCED MEASURE:

The student will troubleshoot a switch, determine malfunctioning component, repair the switch and conduct an operational check. Equipment must power up when the switch is turned on.

PERFORMANCE GUIDE:

1. Obtain equipment to be serviced.
2. Identify malfunctioning part:
   A. Button switch.
   B. Lever switch.
   C. Flip switch.
   D. Contacts.
   E. Electronic connections.
3. Replace malfunctioning part with new part.
4. Test off-on switch to insure equipment will power up.

CHECKLIST

DUTY Servicing Computer Equipment.

TASK Repair on-off switch.

ENABLER Off-on switch must be operational; equipment will power up when switch is turned.

STUDENT'S NAME _____ DATE _____

EVALUATOR'S NAME _____ COURSE _____

TIME : STARTED _____ COMPLETED _____

TOTAL _____

DIRECTIONS TO THE EVALUATOR:

Use the following checklist to evaluate student performance while repairing on-off switch.

RECORD THIS INFORMATION:

MANUFACTURER: _____ MODEL: _____

SERIAL #: _____

| PERFORMANCE DETERMINANTS | YES | NO |
|---|---|---|
| The preparer | | |
| - Obtained faulty equipment. | ____ | ____ |
| - Identified malfunctioning parts. | ____ | ____ |
| - Replaced malfunctioning part with new part. | ____ | ____ |
| - Checked on-off switch to insure equipment will power up. | ____ | ____ |

GUIDE SHEET

DUTY: Servicing Computer Equipment

---

PERFORMANCE OBJECTIVE #117

TASK: Repair mechanical assembly.

STANDARD OF PERFORMANCE OF TASK:

Mechanical assembly must provide peripheral equipment with mechanical power/motion.

SOURCE OF STANDARD:

Writing team of incumbent workers.
How To Maintain and Service Your Small Computer.

CONDITIONS FOR PERFORMANCE OF TASK:

Mechanical assembly to be serviced
Service manual (manufacturers specifications)
Replacement parts
Tool kit

ENABLING OBJECTIVE:

1. Identify components of mechanical assembly.
2. Determine if mechanical assembly can be repaired.
3. Remove and replace malfunctioning component.

*RESOURCES:

1. Computer Facts. Howard W. Sams and Company, Inc., Indianapolis, IN , 1983.
2. Stephenson and Cahill. How To Maintain and Service Your Small Computer. Howard W. Sams and Company, Inc., Indianapolis, IN , 1983.
3. Manufacturer's operator's manual
4. Manufacturer's technical reference manual.
5. Manufacturer's service manual.
6. Visual Aid - Mechanical components.
7. Checklist - Repairing mechanical assembly.

TEACHING ACTIVITIES:

1. Present lecture on types and uses of mechanical assemblies. (*2)
2. Discuss components in a mechanical assembly.

TEACHING ACTIVITIES: (cont.)

3. Present a lecture on troubleshooting and repairing a mechanical assembly. (#1,2,3,4,5)
4. Discuss troubleshooting and repairing procedures for a mechanical assembly.
5. Demonstrate troubleshooting and repairing procedures for a mechanical assembly.
6. Discuss and demonstrate operational testing procedures for mechanical assemblies.
7. Instruct student to troubleshoot, repair and check a mechanical assembly.

CRITERION-REFERENCED MEASURE:

The student will troubleshoot, repair and perform an operational check on the mechanical assembly. The mechanical assembly must provide mechanical power/motion to the equipment.

PERFORMANCE GUIDE:

1. Obtain mechanical assembly to be repaired.
2. Identify worn, bent or broken part:
   A. Gears.
   B. Cams.
   C. Sliding parts.
   D. Bearings.
   E. Bushings.
   F. Springs.
   G. Shafts.
   H. Rollers.
   I. Pulleys.
   J. Levers.
3. Replace worn, bent or broken part with a new replacement part.
4. Adjust, align, and lubricate new part according to manufacturer's specifications.
5. Test run peripheral equipment and check that all mechanical parts are aligned and functional.

# MECHANICAL COMPONENTS

Gears

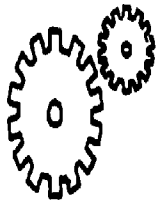

Rotating Cams

Sliding Parts

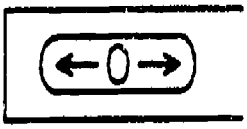

Shaft Sliding Through A Bushing

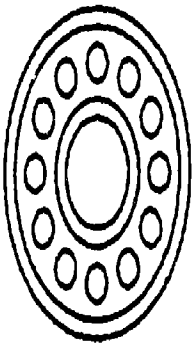

Packed Roller Ball Bearing

Shaft Sliding Through A Bushing

Lever Rotating On A Stud

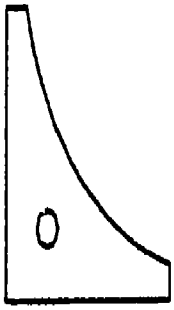

Bearing That Carries A Rotating Shaft

Spring

Roller

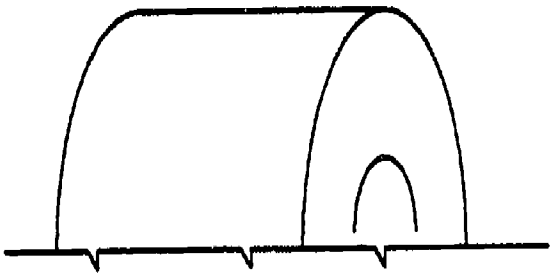

Pulley

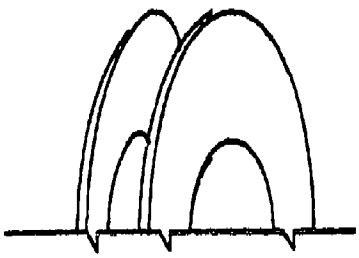

CHECKLIST

DUTY Servicing Computer Equipment.

TASK Repair mechanical assembly.

ENABLER Mechanical assembly must provide peripherial equipment with mechanical power/motion.

STUDENT'S NAME _____ DATE _____

EVALUATOR'S NAME _____ COURSE _____

TIME : STARTED _____ COMPLETED _____

TOTAL _____

DIRECTIONS TO THE EVALUATOR:

Use the following checklist to evaluate student performance while repairing mechanical assembly.

RECORD THIS INFORMATION:

MANUFACTURER: _____ MODEL: _____

SERIAL #: _____

| PERFORMANCE DETERMINANTS | YES | NO |
|---|---|---|
| The preparer | | |
| - Obtained faulty mechanical assembly. | ____ | ____ |
| - Identified worn part. | ____ | ____ |
| - Identified bent part. | ____ | ____ |
| - Identified broken part. | ____ | ____ |
| - Replaced worn part. | ____ | ____ |
| - Replaced bent part. | ____ | ____ |
| - Replaced broken part. | ____ | ____ |
| - Adjusted, aligned and lubricated new parts. | ____ | ____ |
| - Check that all mechanical parts are aligned and functional. | ____ | ____ |
| - Test run peripheral equipment. | ____ | ____ |

GUIDE SHEET

DUTY: Servicing Computer Equipment

---

PERFORMANCE OBJECTIVE #118

TASK: Repair printed circuit board.

STANDARD OF PERFORMANCE OF TASK:

Printed circuit board must receive, interpret, and manipulate data signals sent from the central processing unit to the peripheral device.

SOURCE OF STANDARD:

Writing team of incumbent workers.
Troubleshooting and Repairing Personal Computers.
Apple Technical Manual.

CONDITIONS FOR PERFORMANCE OF TASK:

Printed circuit board to be serviced
Replacement parts
Tool kit

ENABLING OBJECTIVE:

1. Identify components on a printed circuit board.
2. Troubleshoot, repair and check a printed circuit board

*RESOURCES:


1. Computer Facts. Howard W. Sams and Company, Inc., Indianapolis, IN .
2. Art Margolis. Troubleshooting and Repairing Personal Computers. Tab Books Inc., Blue Ridge Summit, PA , 1983 .
3. Stephenson and Cahill. How To Maintain and Service Your Small Computer. Howard W. Sams and Company, Inc., Indianapolis, IN , 1983.
4. Art Margolis. Computer Technician's Handbook. 2nd Edition. Tab Books Inc., Blue Ridge Summit, PA, 1985.
5. Art Margolis. Computer User's Guide To Electronics. Tab Books Inc., Blue Ridge Summit, PA , 1985.
6. Stan Gibilisco. Encyclopedia of Electronics. Tab Professional and Reference Books, Tab Books Inc., Blue Ridge Summit, PA , 1985

*RESOURCES: (cont.)

7. Manufacturer's operational manual.
8. Manufacturer's technical reference manual.
9. Manufacturer's service manual.
10. Visual Aid - Printed circuit board.
11. Checklist - Printed circuit repair.

TEACHING ACTIVITIES:

1. Present a lecture on components of a printed circuit board. (*1,2,7,8 & 9)
2. Discuss identifying and troubleshooting a component on a printed circuit board.
3. Present a lecture on the functions and operation of components. (*2,3,4,5 & 6)
4. Discuss different components, what their main function is and how they operate.
5. Present a lecture on repair procedures for a printed circuit board. (*1,2,5,6,7,8 & 9)
6. Discuss how to determine if board should be repaired or replaced.
7. Discuss and demonstrate safety precautions for working on printed circuit boards.
8. Demonstrate repair procedures for a printed circuit board.
9. Discuss and demonstrate how to perform an operational check on a printed circuit board.
10. Instruct student to troubleshoot, repair and check a printed circuit board.

CRITERION-REFERENCED MEASURE:

The student will troubleshoot, repair or replace and conduct an operational check on a printed circuit board. The circuit board must pass operational check without error.

PERFORMANCE GUIDE:

1. Obtain printed circuit board to be repaired.
2. Identify malfunctioning or broken part/component:
   A. Encoder boards/cards.
   B. Encoder sockets.
   C. Cable and cable connectors.
   D. Integrated circuit chips.
   E. Resistors.
   F. Capacitors.
   G. Diodes.
   H. Traces.
   I. Soldered electrical sockets.
   J. Card edge connectors.
3. Replace malfunctioning or broken part or component with a new replacement part or component.
4. Test run peripheral equipment to check if printed circuit board is functional.

# PRINTED CIRCUIT BOARD COMPONENT IDENTIFICATION

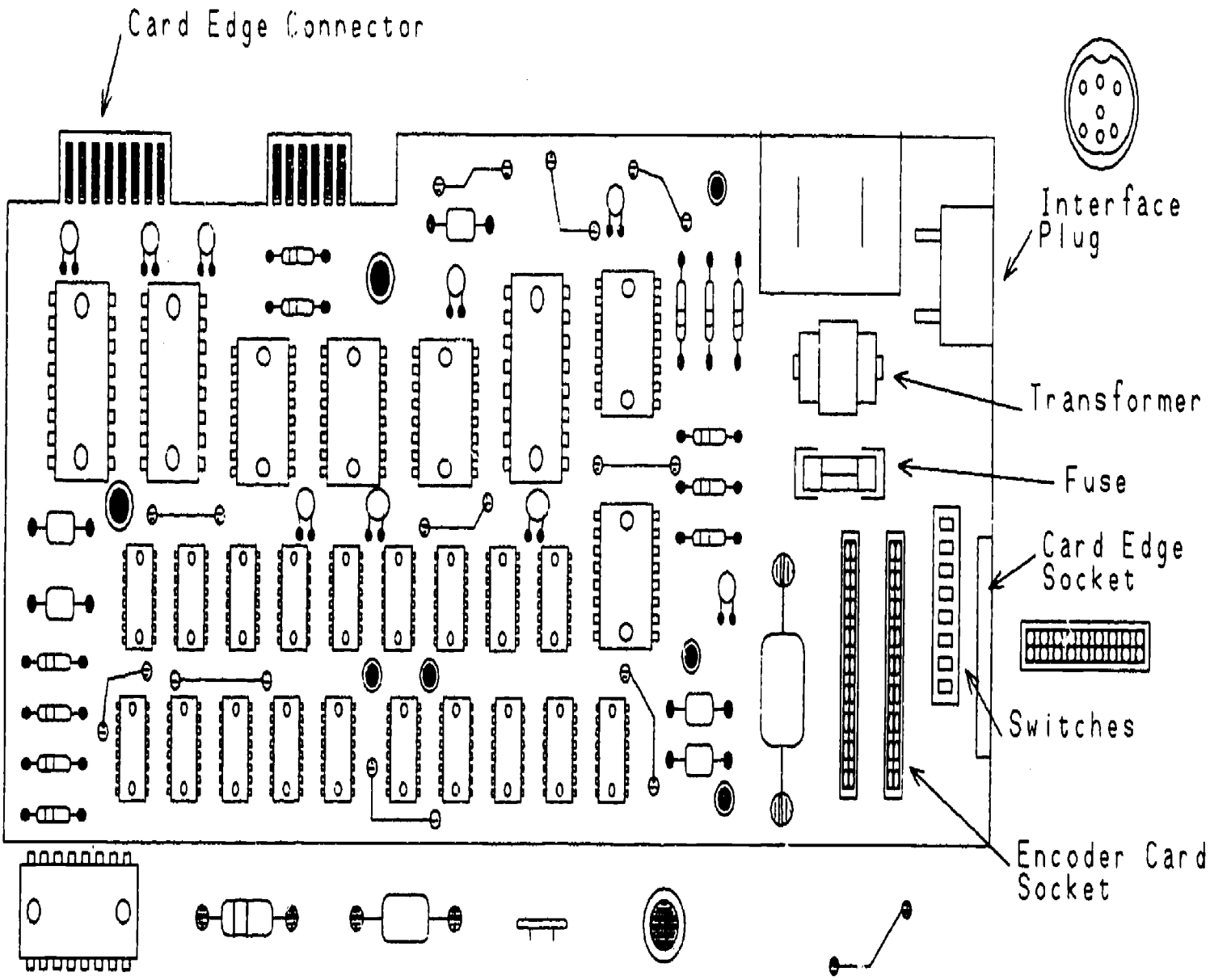


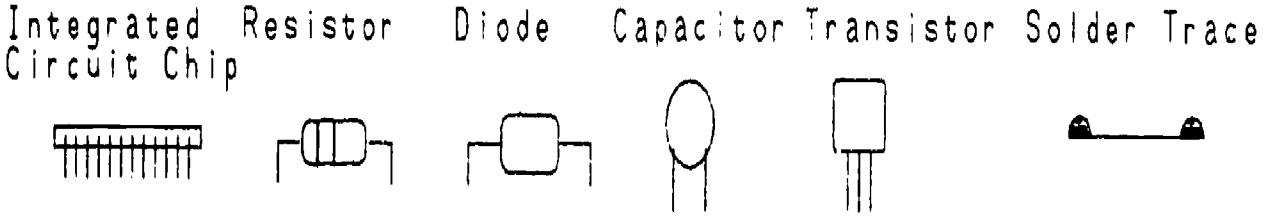

CHECKLIST

DUTY Servicing Computer Equipment.

TASK Repair printed circuit board.

ENABLER Printed circuit board must recieve, interpret, and manipulate data signals sent from the central processing unit to the peripheral device.

STUDENT'S NAME _____ DATE _____

EVALUATOR'S NAME _____ COURSE _____

TIME : STARTED _____ COMPLETED _____

TOTAL _____

DIRECTIONS TO THE EVALUATOR:

Use the following checklist to evaluate student performance while repairing printed circuit board.

RECORD THIS INFORMATION:

MANUFACTURER: _____ MODEL: _____

SERIAL #: _____

| PERFORMANCE DETERMINANTS | YES | NO |
|---|---|---|
| The preparer | | |
| - Obtained faulty printed circuit board. | ____ | ____ |
| - Identified malfunctioning component. | ____ | ____ |
| - Replaced malfunctioning component with new component. | ____ | ____ |
| - Check if printed circuit board is functional. | ____ | ____ |
| - Test run peripheral equipment. | ____ | ____ |

GUIDE SHEET

DUTY: Servicing Computer Equipment

---

PERFORMANCE OBJECTIVE #119

TASK: Repair drive motor.

STANDARD OF PERFORMANCE OF TASK:

Drive motor must operate without binding or overheating.

SOURCE OF STANDARD:

Writing team of incumbent workers.
How To Maintain and Service Your Small Computer.

CONDITIONS FOR PERFORMANCE OF TASK:

Equipment to be serviced
Replacement parts
Tool kit

ENABLING OBJECTIVE:

1. Identify components of a drive motor.
2. Determine if motor should be repaired or replaced.

*RESOURCES:

1. Computer Facts. Howard W. Sams & Company., Inc., Indianapolis, IN.
2. Stephenson and Cahill. How to Maintain and Service Your Small Computer. Howard W. Sams and Company., Inc., Indianapolis, IN, 1983.
3. Manufacturer's operator's manual.
4. Manufacturer's technical reference.
5. Manufacturer's service manual.
6. Visual aid - Drive motor.
7. Checklist - Drive motor repair.

TEACHING ACTIVITIES:

1. Present lecture on the function and operation of a drive motor. (*2 & 3)
2. Discuss the components of a drive motor.
3. Present a lecture on the repair procedures for a drive motor. (*1,3,4 & 5)

TEACHING ACTIVITIES: (cont.)

4. Discuss and demonstrate safety procedures for working with electrical motors.
5. Discuss and demonstrate how to determine if a drive motor should be repaired or replaced.
6. Discuss and demonstrate repair procedures for a drive motor.
7. Discuss and demonstrate how to perform an operational check on a drive motor.
8. Instruct student to repair a drive motor.

CRITERION-REFERENCED MEASURE:

The student will troubleshoot, repair or replace and conduct on operational check on a drive motor. The drive motor must run at the correct speed and operate without binding or overheating.

PERFORMANCE GUIDE:

1. Obtain equipment to be serviced.
2. Identify malfunctioning part:
   A. Motor windings/wrappings.
   B. Motor mounts.
   C. Brushes.
   D. Motor shaft.
   E. Electrical connections.
   F. Wiring.
3. Replace malfunctioning part with new part.
4. Run motor to verify that it does not bind or overheat.

# DRIVE MOTOR COMPONENTS

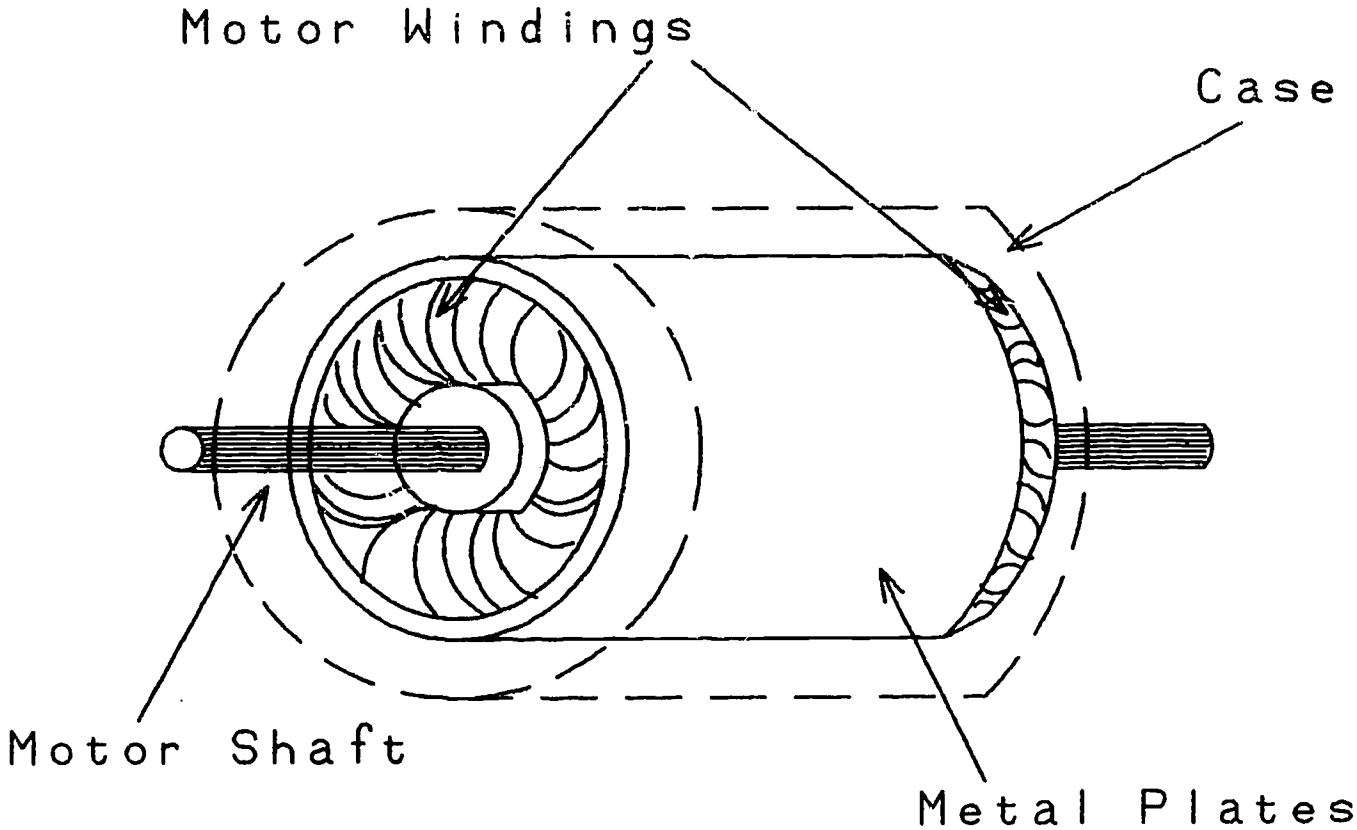

CHECKLIST

DUTY Servicing Computer Equipment.

TASK Repair drive motor.

ENABLER Drive motor must operate without binding or overheating

STUDENT'S NAME _____ DATE _____

EVALUATOR'S NAME _____ COURSE _____

TIME : STARTED _____ COMPLETED _____

TOTAL _____

DIRECTIONS TO THE EVALUATOR:

Use the following checklist to evaluate student performance while repairing drive motor.

RECORD THIS INFORMATION:

MANUFACTURER: _____ MODEL: _____

SERIAL #: _____

| PERFORMANCE DETERMINANTS | YES | NO |
|---|---|---|
| The preparer | | |
| - Obtained faulty equipment. | ____ | ____ |
| - Identified and tested motor windings/ wrappings. | ____ | ____ |
| - Identified and tested motor mounts. | ____ | ____ |
| - Identified and tested brushes. | ____ | ____ |
| - Identified and tested motor shaft. | ____ | ____ |
| - Identified and tested electrical connections. | ____ | ____ |
| - Identified and tested wiring. | ____ | ____ |
| - Replaced malfunctioning part with new part. | ____ | ____ |
| - Test run motor to verify that it does not bind or overheat. | ____ | ____ |

GUIDE SHEET

DUTY: Servicing Computer Equipment

---

PERFORMANCE OBJECTIVE #120

TASK: Repair carriage assembly.

STANDARD OF PERFORMANCE OF TASK:

Printer carriage must move back and forth without sticking or jamming.

SOURCE OF STANDARD:

Writing team of incumbent workers.
How To Maintain and Service Your Small Computer.
Apple Technical Manual.

CONDITIONS FOR PERFORMANCE OF TASK:

Service manual (manufacturer specifications).
Printer to be serviced.
Replacement parts.
Tool kit.

ENABLING OBJECTIVE:

1. Identify the components in a carriage assembly.
2. Determine if carriage assembly should be repaired or replace.

*RESOURCES:

1. Computer Facts. Howard W. Sams and Company Inc., Indianapolis, IN ,.
2. Stephenson and Cahill. How To Maintain and Service Your Small Computer. Howard W. Sams and Company, Inc., Indianapolis, IN , 1983.
3. Manufacturer's operator's manual.
4. Manufacturer's technical reference manual.
5. Manufacturer's service manual.
6. Visual aid - Carriage assembly components.
7. Checklist - Carriage assembly repair.

TEACHING ACTIVITIES:

1. Present lecture on the function of a carriage assembly and how it operates. (*1,2,3,4,5)

TEACHING ACTIVITIES: (cont.)

2. Discuss and demonstrate the different components of a carriage assembly.
3. Present a lecture on repair procedures for a carriage assembly.
4. Discuss and demonstrate safety consideration when repairing a carriage assembly.
5. Discuss and demonstrate repair procedure for a carriage assembly.
6. Discuss and demonstrate performing an operational check on a carriage assembly.
7. Assign the student a carriage assembly with numbered components and instruct the student to identify the components and determine if they need repair.
8. Instruct student to repair a carriage assembly and perform an operational check.

CRITERION-REFERENCED MEASURE:

The student will troubleshoot, repair and conduct an operational check on a carriage assembly. The carriage must operate without sticking or jamming.

PERFORMANCE GUIDE:

1. Obtain printer to be serviced.
2. Identify malfunctioning part:
   A. Carriage support rails.
   B. Carriage.
   C. Pulleys.
   D. Right and left tab carriage-stop sensor.
   E. Cables.
   F. Stepper motor.
   G. Support rails wheels.
   H. Helical gears.
3. Replace malfunctioning part and lubricate according to manufacturer specifications.
4. Move carriage back and forth to insure that it moves freely.

CHECKLIST

DUTY Servicing Computer Equipment.

TASK Repair carriage assembly.

ENABLER Printer carriage must move back and forth without sticking or jamming.

STUDENT'S NAME _____ DATE _____

EVALUATOR'S NAME _____ COURSE _____

TIME : STARTED _____ COMPLETED _____

TOTAL _____

DIRECTIONS TO THE EVALUATOR:

Use the following checklist to evaluate student performance while repairing carriage assembly.

RECORD THIS INFORMATION:

MANUFACTURER: _____ MODEL: _____

SERIAL #: _____

| PERFORMANCE DETERMINANTS | YES | NO |
|---|---|---|
| The preparer | | |
| - Obtained faulty printer. | ____ | ____ |
| - Identified malfunctioning part. | ____ | ____ |
| - Replaced malfunctioning part. | ____ | ____ |
| - Lubricated part according to manufacturer specifications. | ____ | ____ |
| - Checked carriage to insure that it moves freely. | ____ | ____ |

GUIDE SHEET

DUTY: Servicing Computer Equipment

---

PERFORMANCE OBJECTIVE #121

TASK: Repair paper feed assembly.

STANDARD OF PERFORMANCE OF TASK:

Printer paper assembly must be functional; paper must feed through without bending, tearing or folding.

SOURCE OF STANDARD:

Writing team of incumbent workers.
How To Maintain and Service Your Small Computer.

CONDITIONS FOR PERFORMANCE OF TASK:

Service manual (manufacturer specifications)
Printer to be serviced
Replacement parts
Tool kit

ENABLING OBJECTIVE:

1. Identify the components in a paper feed assembly.
2. Determine if paper feed assembly should be repaired or replaced.

*RESOURCES:

1. Computer Facts. Howard W. Sams and Company., Inc., Indianapolis, IN.
2. Stephenson and Cahill. How to Maintain and Service Your Small Computer. Howard W. Sams and Company., Inc., Indianapolis, IN, 1983.
3. Manufacturer's operator's manual.
4. Manufacturer's technical reference.
5. Manufacturer's service manual.
6. Visual aid - Paper feed assembly components, see performance objective 87.
7. Checklist - Paper feed assembly repair.

TEACHING ACTIVITIES:

1. Present lecture on the function of a paper feed assembly and how it operates. (*1,2,3,4 & 5)

TEACHING ACTIVITIES: (cont.)

2. Discuss and demonstrate the different components of a paper feed assembly.
3. Present a lecture on repair procedures for a paper feed assembly.
4. Discuss and demonstrate safety considerations when repairing a paper feed assembly.
5. Discuss and demonstrate repair procedures for a paper feed assembly.
6. Discuss and demonstrate performing a operational check on a paper feed assembly.
7. Assign the student a paper feed assembly with numbered components and instruct the student to identify the components and determine if they need repair.
8. Instruct student to repair a paper feed assembly and perform an operational check.

CRITERION-REFERENCED MEASURE:

The student will repair a paper feed assembly and conduct a operational check. The paper feed assembly must operate without tearing, bending, or folding the paper.

PERFORMANCE GUIDE:

1. Obtain printer to be serviced.
2. Identify malfunctioning part:
   A. Tractor-feed assembly:
      1. Platen.
      2. Platen drive gear.
      3. Flexible belt with drive pins.
      4. Tractor drive wheel.
      5. Square drive shaft.
      6. Tractor drive gear.
      7. Idler gear.
   B. Friction feed assembly:
      1. Platen drive gear.
      2. Spring-loaded pressure rollers.
      3. Platen.
      4. Drive gear.
      5. Stepper motor.
3. Replace malfunctioning part with new part and adjust and lubricate according to manufacturer specifications.
4. Load paper into printer and check to make sure paper feeds through without bending, folding or tearing.

CHECKLIST

DUTY Servicing Computer Equipment.

TASK Repair paper feed assembly.

ENABLER Printer paper assembly must be functional: paper must feed through without bending, tearing or folding.

STUDENT'S NAME _____ DATE _____

EVALUATOR'S NAME _____ COURSE _____

TIME : STARTED _____ COMPLETED _____

TOTAL _____

DIRECTIONS TO THE EVALUATOR:

Use the following checklist to evaluate student performance while repairing paper feed assembly.

RECORD THIS INFORMATION:

MANUFACTURER: _____ MODEL: _____

SERIAL #: _____

| PERFORMANCE DETERMINANTS | YES | NO |
|---|---|---|
| The preparer | | |
| - Obtained malfunctioning printer. | ____ | ____ |
| - Identified malfunctioning part. | ____ | ____ |
| - Replaced malfunctioning part. | ____ | ____ |
| - Adjust and lubricated according to manufacturer specifications. | ____ | ____ |
| - Passed operational check on loading paper without error. | ____ | ____ |

GUIDE SHEET

DUTY: Servicing Computer Equipment

---

PERFORMANCE OBJECTIVE #122

TASK: Repair circuit/language card.

STANDARD OF PERFORMANCE OF TASK:

Circuit card must allow interfacing between central processing unit and peripheral unit. Language card must allow central processing unit to use different programming languages such as Pascal, COBOL and Fortran; passes diagnostic test without error.

SOURCE OF STANDARD:

Writing team of incumbent workers.

CONDITIONS FOR PERFORMANCE OF TASK:

Circuit/language card to be serviced
Replacement parts/component
Tool kit

ENABLING OBJECTIVE:

1. Identify components on a circuit/language card.
2. Determine if circuit/language card should be repaired or replaced.

*RESOURCES:

1. Stephenson and Cahill. How to Maintain and Service Your Small Computer. Howard W. Sams and Company., Inc., Indianapolis, IN,1983.
2. Art Margolis. Computer Technician's Handbook, 2nd Edition. Tab Books Inc., Blue Ridge Summit, PA, 1985.
3. Manufacturer's operator's manual.
4. Manufacturer's technical reference.
5. Manufacturer's service manual.
6. Checklist - Circuit/language card repair.

TEACHING ACTIVITIES:

1. Present lecture on components of a circuit/language card. (*1,2,3,4 & 5)

TEACHING ACTIVITIES: (cont.)

2. Discuss identifying and troubleshooting a component on a printed circuit board.
3. Present a lecture on the functions and operations of circuit/language card components.
4. Discuss different components, what their main function is and how they operate.
5. Present a lecture on repair procedures for a circuit/language card. (*1,2,3,4 & 5)
6. Discuss how to determine if board should be repaired or replaced.
7. Discuss and demonstrate safety precautions for working on circuit/language cards.
8. Demonstrate repair procedures for a circuit/language cards.
9. Discuss and demonstrate how to perform an operational check on a circuit/language cards.
10. Instruct student to troubleshoot, repair and check a circuit/language card.

CRITERION-REFERENCED MEASURE:

The student will repair a circuit/language card. The circuit/language must pass diagnostic test without errors.

PERFORMANCE GUIDE:

1. Obtain circuit/language card to be repaired.
2. Identify malfunctioning part or component:
   A. Integrated circuit chip.
   B. Capacitor.
   C. Resistor.
   D. Diode.
   E. Tracer.
   F. Cable and cable connectors.
3. Replace malfunctioning part/component with new replacement part/component.
4. Test run peripheral equipment to determine if circuit card is functioning. Perform diagnostic test to check if language card is functioning.

CHECKLIST

DUTY Servicing Computer Equipment.

TASK Repair circuit/language card.

ENABLER Circuit card must allow interfacing between central processing unit and peripheral unit. Language card must allow central processing unit to use different programming languages such as Pascal, COBOL and Fortran: passes diagnostic test without error.

STUDENT'S NAME _____ DATE _____

EVALUATOR'S NAME _____ COURSE _____

TIME : STARTED _____ COMPLETED _____

TOTAL _____

DIRECTIONS TO THE EVALUATOR:

Use the following checklist to evaluate student performance while repairing circuit/language card.

RECORD THIS INFORMATION:

MANUFACTURER: _____ MODEL: _____

SERIAL #: _____

| PERFORMANCE DETERMINANTS | YES | NO |
|---|---|---|
| The preparer | | |
| - Obtained malfunctioning circuit/ language card. | ____ | ____ |
| - Identified malfunctioning part/ component. | ____ | ____ |
| - Replaced malfunctioning part/ component with nem part/component. | ____ | ____ |
| - Test run peripheral equipment to determine if circuit board is functioning. | ____ | ____ |
| - Performed diagnostic test to check if language card is functioning . | ____ | ____ |

GUIDE SHEET

DUTY: Servicing Computer Equipment

---

PERFORMANCE OBJECTIVE #123

TASK: Repair tape transport assembly.

STANDARD OF PERFORMANCE OF TASK:

Tape must feed through tape transport assembly without stretching, binding or tangling.

SOURCE OF STANDARD:

Writing team of incumbent workers.
How To Maintain and Service Your Small Computer.
Handbook Of Computer Maintenance and Troubleshooting.

CONDITIONS FOR PERFORMANCE OF TASK:

Tape player/recorder
Replacement parts
Tool kit

ENABLING OBJECTIVE:

1. Identify components in a tape transport assembly.
2. Determine if tape transport assembly should be repaired or replaced.

*RESOURCES:

1. Computer Facts. Howard W. Sams and Company., Inc., Indianapolis, IN.
2. Stephenson and Cahill. How to Maintain and Service Your Small Computer. Howard w. Sams and Company., Inc., Indianapolis, IN, 1983.
3. Byron Maguire. Handbook of Computer Maintenance and Troubleshooting. Reston Publishing Company, Inc., Reston, VA, 1973.
4. Manufacturer's operator's manual.
5. Manufacturer's technical reference.
6. Manufacturer's service manual.
7. Visual aid - Tape transport components.
8. Worksheet - Tape transport assembly component identification.
9. Checklist - Circuit/language card repair.

TEACHING ACTIVITIES:

1. Present lecture on function and location of tape transport assembly. (#1,2,3,4,5 & 6)
2. Discuss and demonstrate the components in a tape transport assembly.
3. Present a lecture on how to repair a tape transport assembly. (#1,2,3,4,5 & 6)
4. Discuss and demonstrate how to determine if a tape transport system should be repaired or replaced.
5. Discuss safety precautions to observe when working on a tape transport assembly.
6. Discuss and demonstrate tape transport assembly repair procedures.
7. Assign student a tape transport assembly component worksheet.
8. Instruct student to identify tape transport assembly components on the assigned worksheet.
9. Instruct student to repair a tape transport assembly and conduct a operational check.

CRITERION-REFERENCED MEASURE:

The student will repair a tape transport assembly and perform a operational check to insure that the assembly transports tape without stretching, bending or tangling.

PERFORMANCE GUIDE:

1. Obtain tape player/recorder to be serviced.
2. Identify malfunctioning part:
   A. Supply or take up spindle.
   B. Erase head.
   C. Record/playback head.
   D. Pinch roller.
   E. Capstan flywheel.
3. Replace malfunctioning part new part.
4. Run a tape to check if tape passes through transport system without stretching, binding or tangling.

# TAPE TRANSPORT MECHANICAL COMPONENTS
## INTERNAL VIEW

### Front View

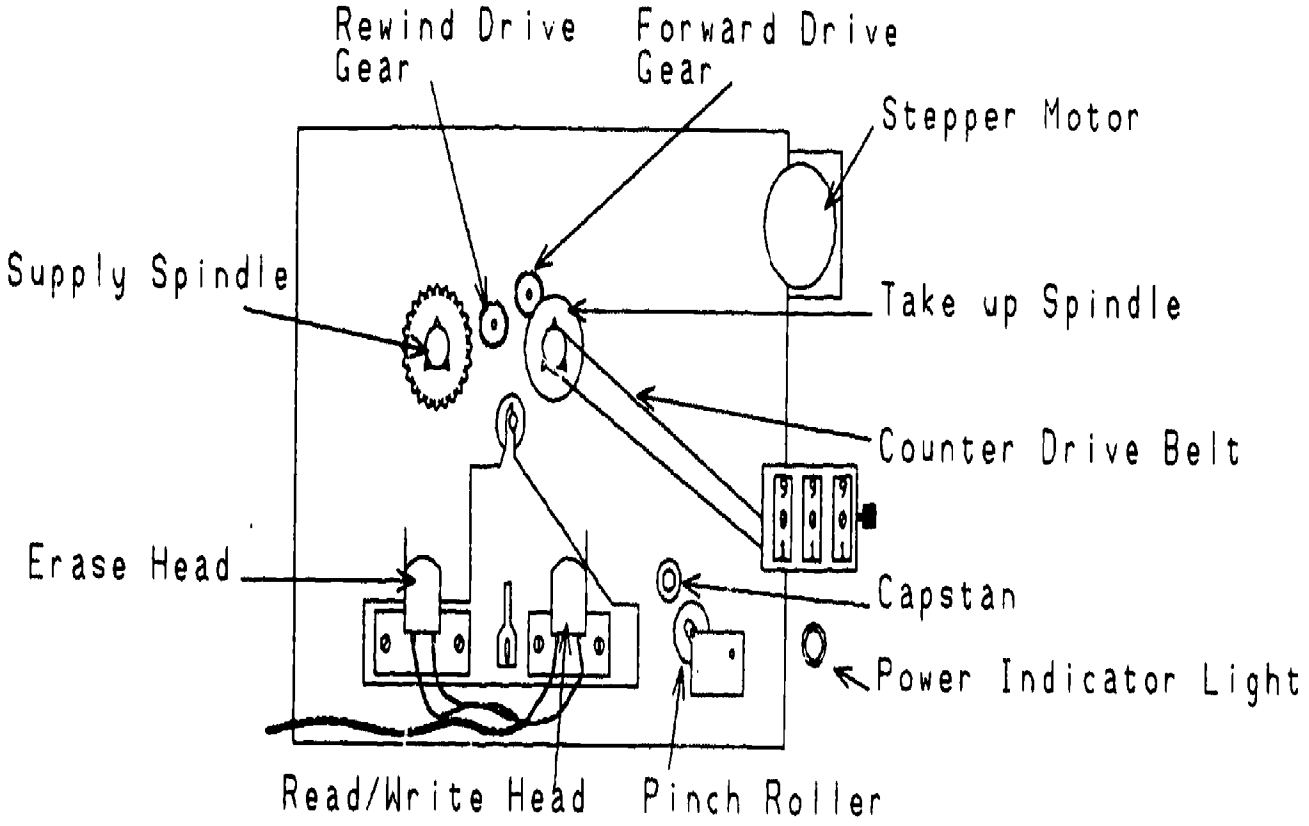


### Back View

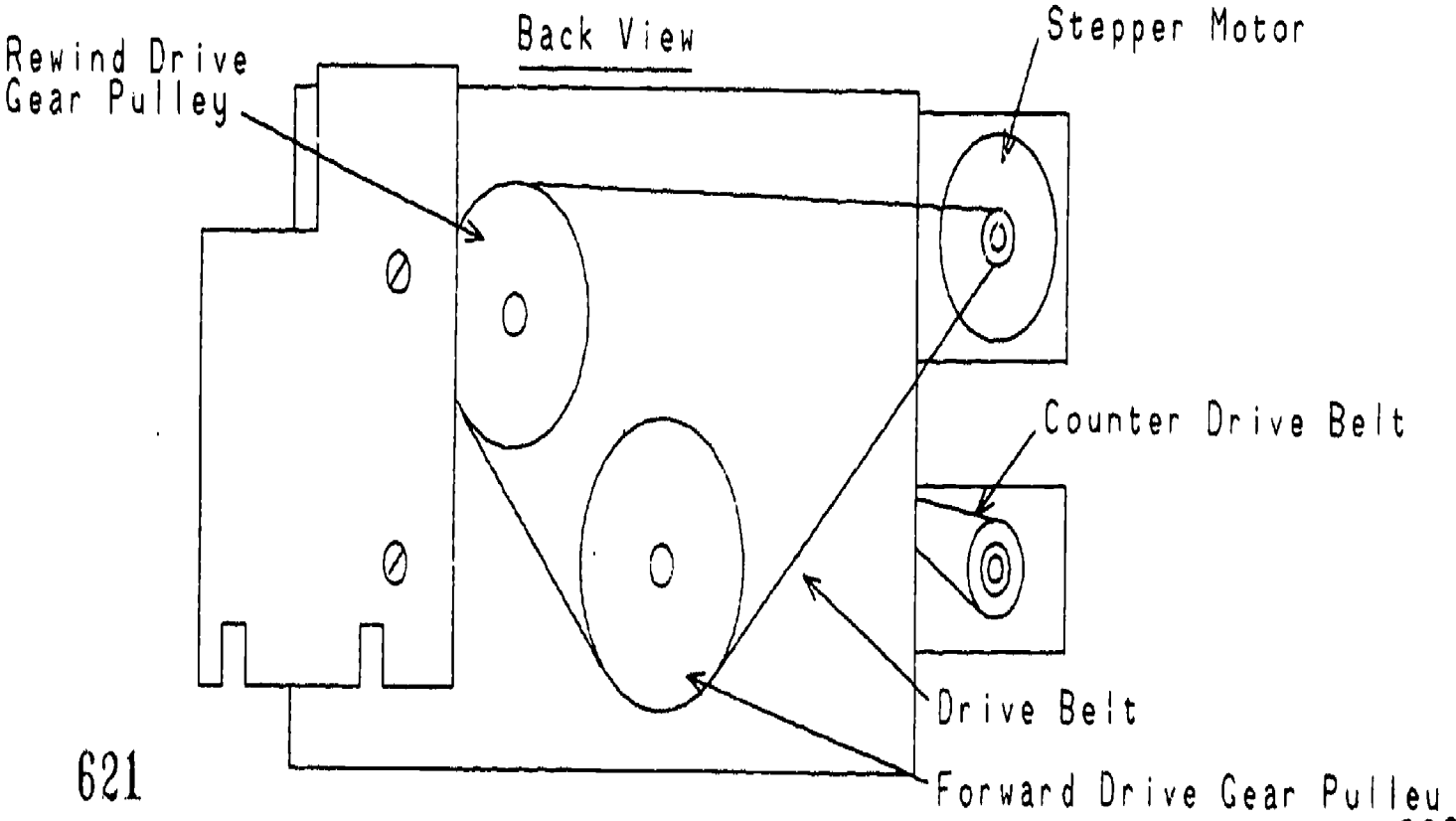

WORKSHEET

TITLE: Tape Transport Mechanical Components - Internal View
DIRECTIONS: Fill in the component name indicated by the arrow.

Front View

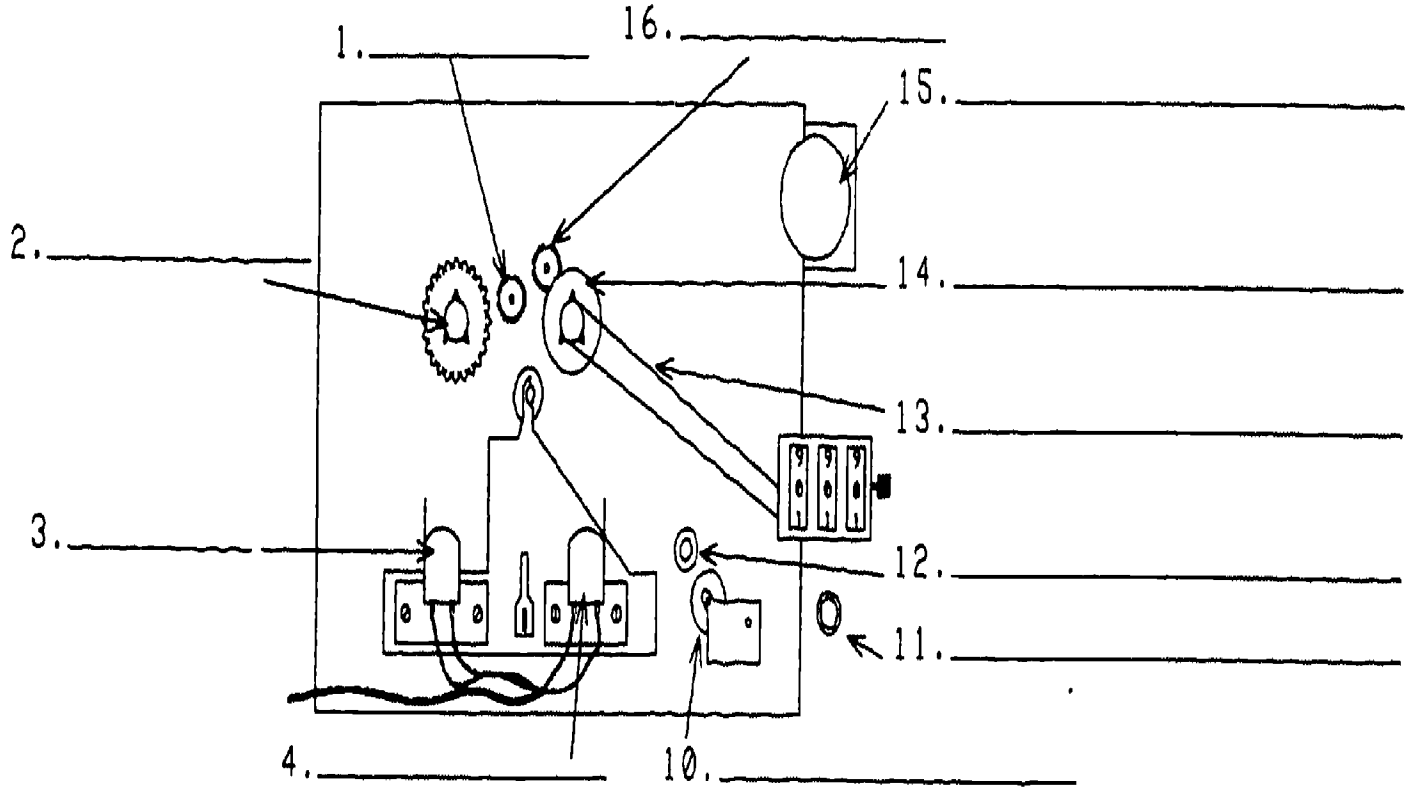


Back View

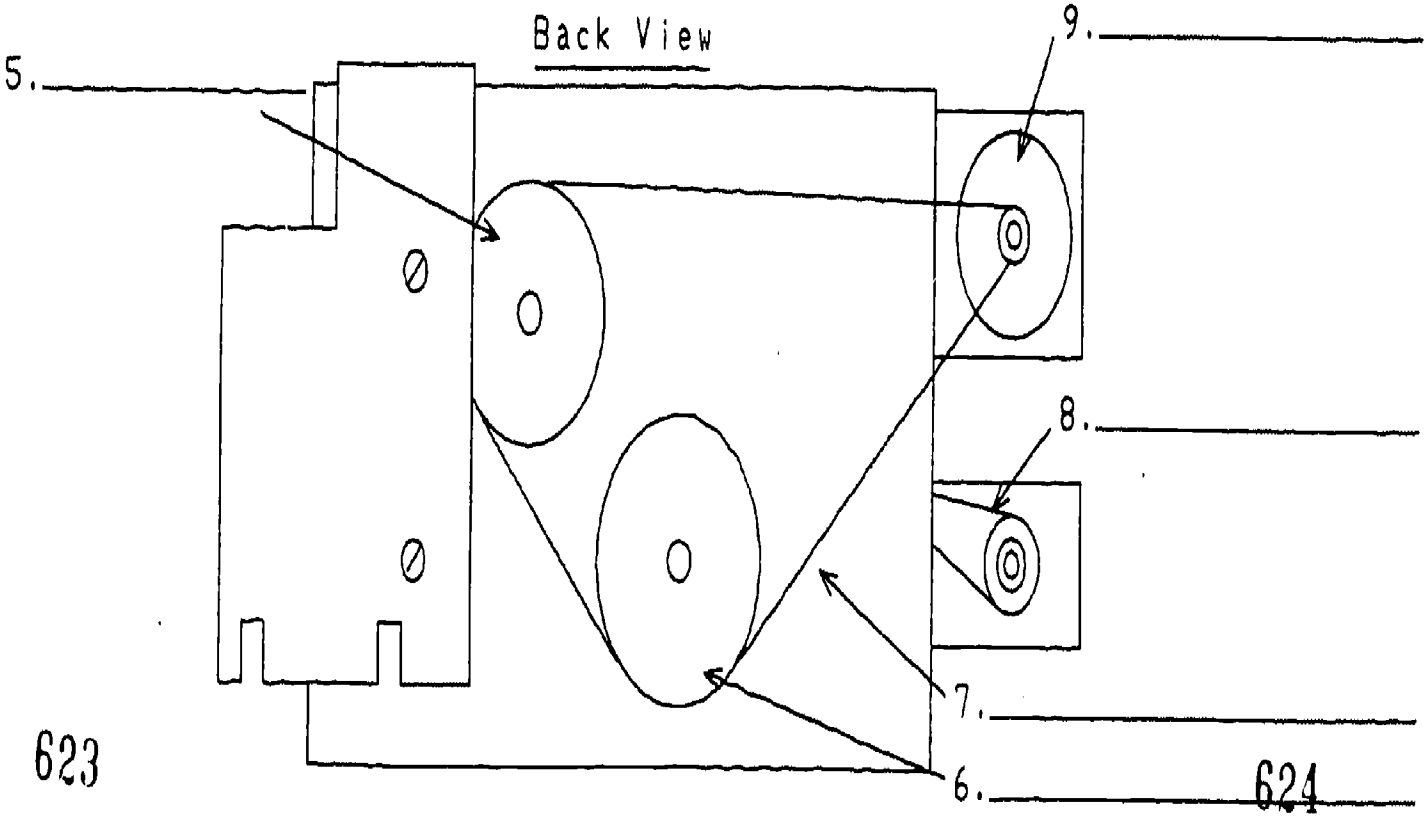

STUDENT WORKSHEET ANSWERS

1. Rewind gear
2. Supply spindle
3. Erase head
4. Read/write head
5. Rewind drive gear pulley
6. Forward drive gear pulley
7. Drive belt
8. Counter drive belt
9. Stepper motor
10. Pinch roller
11. Power indicator light
12. Capstan
13. Counter drive belt
14. Take up spindle
15. Stepper motion
16. Forward gear

CHECKLIST

DUTY Servicing Computer Equipment.

TASK Repair tape transport assembly.

ENABLER Tape must feed through tape transport assembly without stretching, binding or tangling.

STUDENT'S NAME _____ DATE _____

EVALUATOR'S NAME _____ COURSE _____

TIME : STARTED _____ COMPLETED _____

TOTAL _____

DIRECTIONS TO THE EVALUATOR:

Use the following checklist to evaluate student performance while repairing tape transport assembly.

RECORD THIS INFORMATION:

MANUFACTURER: _____ MODEL: _____

SERIAL #: _____

| PERFORMANCE DETERMINANTS | YES | NO |
|---|---|---|
| The preparer | | |
| - Obtained faulty tape player/recorer. | ____ | ____ |
| - Identified and tested supply of take up spindle. | ____ | ____ |
| - Identified and tested erase head. | ____ | ____ |
| - Identified and tested record/ playback head. | ____ | ____ |
| - Identified and tested pinch roller. | ____ | ____ |
| - Identified and tested capstan fly-wheel. | ____ | ____ |
| - Replaced malfunctioning part with new part. | ____ | ____ |
| - Performed operational check on tape. | ____ | ____ |

GUIDE SHEET

DUTY: Servicing Computer Equipment

---

PERFORMANCE OBJECTIVE #124

TASK: Repair print mechanism.

STANDARD OF PERFORMANCE OF TASK:

Printer mechanism must produce clean,clear and crisp lettering.

SOURCE OF STANDARD:

Writing team of incumbent workers.
How To Maintain and Service Your Small Computer.

CONDITIONS FOR PERFORMANCE OF TASK:

Service manual (manufacturer specification)
Printer to be serviced
Replacement parts
Tool kit

ENABLING OBJECTIVE:

1. Identify the type of print mechanism.
2. Identify the components of the print mechanism.
3. Determine if print mechanism should be be repaired or replaced.

*RESOURCES:

1. Stephenson and Cahill. How to Maintain and Service Your Small Computer. Howard w. Sams and Company., Inc., Indianapolis, IN, 1983.
2. Manufacturer's operator's manual.
3. Manufacturer's technical manual.
4. Manufacturer's service manual.
5. Visual Aid - Types of print mechanisms, see performance objective 85.
6. Checklist - Print mechanism repair.

TEACHING ACTIVITIES:

1. Present lecture on types of print mechanisms. (*1,2 & 5)
2. Discuss and demonstrate dot matrix, daisy-wheel and ball or thimble print mechanism.

TEACHING ACTIVITIES: (cont.)

3. Discuss and demonstrate components of a print mechanism.
4. Present lecture on print mechanism repair procedures. (#2,3 & 4)
5. Discuss and demonstrate how to determine if a print mechanism should be repaired or replaced.
6. Discuss and demonstrate repair procedures for dot matrix, daisy-wheel and ball thimble print mechanisms.
7. Assign student several different types of print mechanisms and instruct the student to determine if each mechanism should be replaced or repaired.
8. Instruct student to repair a print mechanism.

CRITERION-REFERENCED MEASURE:

The student will identify the type of print mechanism, determine if it should be repaired or replaced and repair the print mechanism if possible. Print mechanism must produce clean, clear and crisp lettering.

PERFORMANCE GUIDE:

1. Obtain printer mechanism to be repaired.
2. Identify malfunctioning part:
   A. Dot matrix print mechanism:
      1. Print wires.
      2. Armature.
      3. Return spring.
      4. Soleniod.
   B. Daisy-wheel print mechanism:
      1. Print head.
      2. Print arm.
3. Replace malfunctioning part with new part and adjust and lubricate according to manufacturer specifications.
4. Conduct a sample printing and check for clearness and quality.

CHECKLIST

DUTY Servicing Computer Equipment.

TASK Repair print mechanism.

ENABLER Printer mechanism must produce clean, clear and crisp lettering.

STUDENT'S NAME _____ DATE _____

EVALUATOR'S NAME _____ COURSE _____

TIME : STARTED _____ COMPLETED _____

TOTAL _____

DIRECTIONS TO THE EVALUATOR:

Use the following checklist to evaluate student performance while repairing print mechanism.

RECORD THIS INFORMATION:

MANUFACTURER: _____ MODEL: _____

SERIAL #: _____

| PERFORMANCE DETERMINANTS | YES | NO |
|---|---|---|
| The preparer | | |
| - Obtained faulty printer mechanism. | ____ | ____ |
| - Identified malfunctioning part. | ____ | ____ |
| - Replaced malfunctioning part with new part. | ____ | ____ |
| - Adjusted and lubricated according to manufacturers specification. | ____ | ____ |
| - Conducted a sample printing. | ____ | ____ |
| - Checked for clearness and quality. | ____ | ____ |

GUIDE SHEET

DUTY: Servicing Computer Equipment

---

PERFORMANCE OBJECTIVE #125

TASK: Repair read/write/verify head.

STANDARD OF PERFORMANCE OF TASK:

Disk drive must be functional; reads/writes and verifies data without error.

SOURCE OF STANDARD:

Writing team of incumbent workers.
How To Maintain and Service Your Small Computer.
Handbook Of Computer Maintenance And Troubleshooting.

CONDITIONS FOR PERFORMANCE OF TASK:

Disk drive to be serviced
Replacement parts
Tool kit

ENABLING OBJECTIVE:

1. Identify components of a read/write/verify head.
2. Determine if read/write/verify should be repaired or replaced.

*RESOURCES:

1. Computer Facts. Howard and Sams and Company., Inc., Indianapolis, IN.
2. Stephenson and Cahill. How to Maintain and Service Your Small Computer. Howard W. Sams and Company., Inc., Indianapolis, IN, 1983.
3. Manufacturer's operator's manual.
4. Manufacturer's DOS manual.
5. Manufacturer's technical reference.
6. Manufacturer's service manual.
7. Worksheet - Read/write/verify head component identification, see performance objective 61.
8. Checklist - Read/write/verify head repair.

TEACHING ACTIVITIES:

1. Present lecture on the location and function of the read/write/verify head. (*1,2,3,4,5 & 6)

TEACHING ACTIVITIES: (cont.)

2. Discuss and demonstrate the components of a read/write/verify head.
3. Instruct student to complete a read/write/verify head components identification worksheet. (#7)
4. Discuss safety considerations when working with a read/write/ verify head.
5. Present lecture on repair procedures for a read/write/verify head. (#1,2,5 & 6)
6. Discuss and demonstrate repair procedures for carriage support rails, head, head carriage, spiral cam, stepper motor and motor base.
7. Discuss and demonstrate how to determine if read/write/verify should be repaired or replaced.
8. Discuss and demonstrate how to perform an operational check on a read/write/verify head.
9. Instruct student to repair a read/write/verify head and perform and operational check.

CRITERION-REFERENCED MEASURE:

The student will troubleshoot the read/write/verify head, determine if it should be repaired or replaced, repair head when possible and perform an operational check. The head must read, write, and verify data without error.

PERFORMANCE GUIDE:

1. Obtain disk drive to be repaired.
2. Identify parts to be replaced:
   A. Carriage support rails.
   B. Head.
   C. Head carriage.
   D. Stepper motor.
   E. Motor base.
   F. Spiral cam.
3. Replace malfunctioning part with new part.
4. Test run drive to insure that drive head will read, write and verify without error.

CHECKLIST

DUTY Servicing Computer Equipment.

TASK Repair read/write/verify head.

ENABLER Disk drive must be functional; reads/writes and verifies data without error.

STUDENT'S NAME _____ DATE _____

EVALUATOR'S NAME _____ COURSE _____

TIME : STARTED _____ COMPLETED _____

TOTAL _____

DIRECTIONS TO THE EVALUATOR:

Use the following checklist to evaluate student performance while repairing read/write/verify head.

RECORD THIS INFORMATION:

MANUFACTURER: _____ MODEL: _____

SERIAL #: _____

| PERFORMANCE DETERMINANTS | YES | NO |
|---|---|---|
| The preparer | | |
| - Obtained faulty disk drive. | ____ | ____ |
| - Identified parts to be replaced. | ____ | ____ |
| - Replaced malfunctioning part with new part. | ____ | ____ |
| - Test ran disk drive to ensure drive head will read, write and verify without error. | ____ | ____ |

GUIDE SHEET

DUTY: Servicing Computer Equipment

---

PERFORMANCE OBJECTIVE #126

TASK: Repair ribbon assembly.

STANDARD OF PERFORMANCE OF TASK:

Ribbon must produce dark, clear, readable printed characters; ribbon should move continuously while printing is taking place.

SOURCE OF STANDARD:

Writing team of incumbent workers.
How To Maintain and Service Your Small Computer.

CONDITIONS FOR PERFORMANCE OF TASK:

Printer to be serviced
Replacement parts
Tool kit

ENABLING OBJECTIVE:

1. Identify components of a ribbon assembly.
2. Determine if ribbon assembly should be repaired or replaced.

*RESOURCES:

1. Stephenson and Cahill. How to Maintain and Service Your Small Computer. Howard W. Sams and Company., Inc., Indianapolis, IN, 1983.
2. Stan Gibilisco. Encyclopedia of Electronics. Tab Professional and Reference Books, Tab Books, Inc., Blue Ridge Summit, PA, 1985.
3. Manufacturer's operator's manual.
4. Manufacturer's technical reference.
5. Manufacturer's service manual.
6. Checklist - Ribbon assembly repair.
7. Visual aid - Ribbon assembly components.

TEACHING ACTIVITIES:

1. Present lecture on the components of a ribbon assembly. (*1 & 5)

TEACHING ACTIVITIES: (cont.)

2. Discuss types of ribbons, re-inking ribbons and replacing ribbons.
3. Discuss and demonstrate the mechanical components of a ribbon assembly.
4. Discuss the difference between cartridge and reel to reel ribbons.
5. Present lecture on ribbon assembly repair procedures. (#1,2,3,4 & 5)
6. Discuss and demonstrate ribbon assembly repair procedures.
7. Discuss and demonstrate how to conduct a ribbon assembly operational check.
8. Instruct student to repair a ribbon assembly.

CRITERION-REFERENCED MEASURE:

The student will determine if the ribbon assembly can be repaired, repair the ribbon assembly and conduct an operational check. The ribbon must feed without kinking or binding and produce dark, clear, readable characters.

PERFORMANCE GUIDE:

1. Obtain ribbon assembly to be repaired.
2. Identify malfunctioning part:
   A. Ribbon.
      1. Fabric.
      2. Plastic or film.
   B. Drive wheel.
   C. Pressure roller.
   D. Pressure spring.
   E. Drive wheel.
   F. Ribbon guide arms.
   G. Ink cassette.
3. Replace malfunctioning part with new part.
4. Test run ribbon.

# PRINTER RIBBON CARTRIDGE

## Internal View

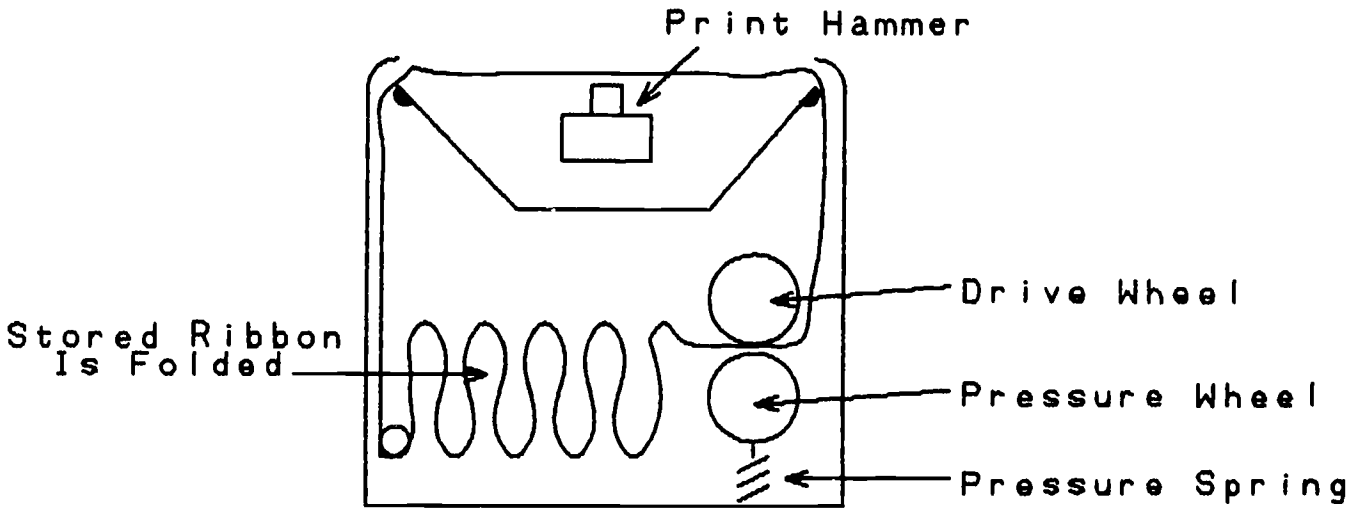


## External View

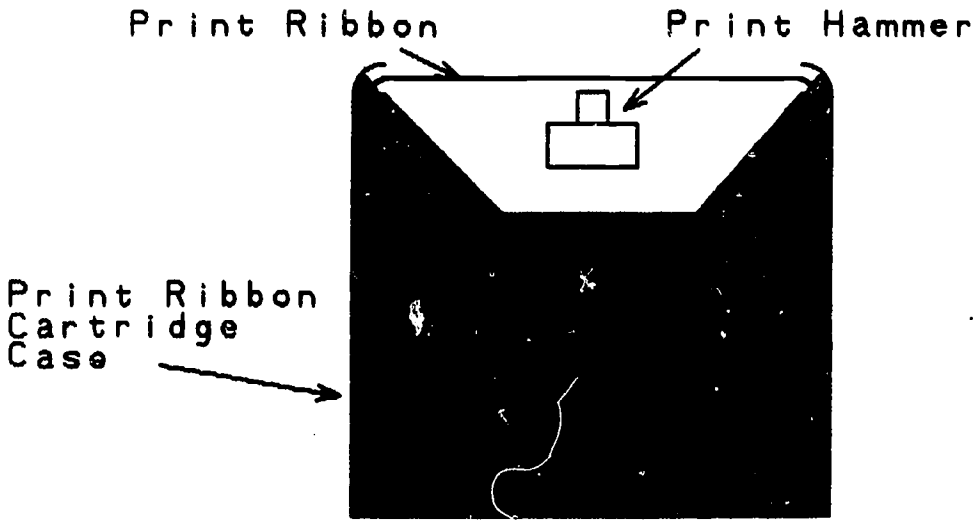

CHECKLIST

DUTY Servicing Computer Equipment.

TASK Repair ribbon assembly.

ENABLER Ribbon must produce dark, clear, readable printed characters; ribbon should move continously while printing is taking place.

STUDENT'S NAME _____ DATE _____

EVALUATOR'S NAME _____ COURSE _____

TIME : STARTED _____ COMPLETED _____

TOTAL _____

DIRECTIONS TO THE EVALUATOR:

Use the following checklist to evaluate student performance while repairing ribbon assembly.

RECORD THIS INFORMATION:

MANUFACTURER: _____ _____MODEL: _____

SERIAL #: _____

| PERFORMANCE DETERMINANTS | YES | NO |
|---|---|---|
| The preparer | | |
| - Obtained faulty ribbon assembly. | ____ | ____ |
| - Identified and inspected ribbon. | ____ | ____ |
| - Identified and inspected drive wheel. | ____ | ____ |
| - Identified and inspected pressure roller. | ____ | ____ |
| - Identified and inspected pressure springs. | ____ | ____ |
| - Identified and inspected ribbon guard arm. | ____ | ____ |
| - Identified and inspected ink cassette. | ____ | ____ |
| - Replaced malfunctioning part with new part. | ____ | ____ |
| - Test ran ribbon. | ____ | ____ |

GUIDE SHEET

DUTY: Servicing Computer Equipment

---

PERFORMANCE OBJECTIVE #127

TASK: Repair ejector mechanism.

STANDARD OF PERFORMANCE OF TASK:

Disk will eject from disk drive opening when disk drive door is opened.

SOURCE OF STANDARD:

Writing team of incumbent workers.
How To Maintain and Service Your Small Computer.

CONDITIONS FOR PERFORMANCE OF TASK:

Disk drive to be serviced
Replacement parts
Tool kit

ENABLING OBJECTIVE:

1. Identify components of a ejector mechanism.
2. Determine if ejector mechanism should be repaired or replaced.

*RESOURCES:

1. Computer Facts. Howard W. Sams & Company, Inc., Indianapolis, IN.
2. Stephenson and Cahill. How to Maintain and Service Your Small Computer. Howard W. Sams and Company, Inc., Indianapolis, IN, 1983.
3. Manufacturer's operator's manual.
4. Manufacturer's technical reference.
5. Manufacturer's service manual.
6. Visual Aid - Ejector mechanism component, see performance objective 100.
7. Worksheet - Ejector mechanism component identification, see performance objective 100.
8. Checklist - Repair ejector mechanism.

TEACHING ACTIVITIES:

1. Present lecture on the function and operation of a ejector mechanism. (*1,2 & 3)

2. Discuss the components of a ejector mechanism.
3. Present a lecture on the repair procedures for a ejector mechanism. (#1,2,3,4 & 5)
4. Discuss and demonstrate safety procedures for working with ejector mechanism components.
5. Discuss and demonstrate how to determine if a ejector mechanism should be repaired or replaced.
6. Discuss and demonstrate repair procedures for a ejector mechanism.
7. Discuss and demonstrate how to perform an operational check on a ejector mechanism.
8. Instruct student to complete the ejector mechanism component identification worksheet. (#7)
9. Instruct student to repair and conduct an operational check on a ejector mechanism.

CRITERION-REFERENCED MEASURE:

The student will troubleshoot, repair and perform an operational check on a ejector mechanism.

PERFORMANCE GUIDE:

1. Obtain disk drive to be serviced.
2. Identify malfunctioning part:
   A. Ejector block.
   B. Return spring.
   C. Retainer spring.
   D. Drive door release spring.
   E. Drive door.
   F. Retainer spring block.
3. Replace malfunctioning part with new part.
4. Insert a disk into drive and open door to check if disk ejects.

CHECKLIST

DUTY Servicing Computer Equipment.

TASK Repair ejector mechanism.

ENABLER Disk will eject from disk drive opening when disk drive door is opened.

STUDENT'S NAME _____ DATE _____

EVALUATOR'S NAME _____ COURSE _____

TIME : STARTED _____ COMPLETED _____

TOTAL _____

DIRECTIONS TO THE EVALUATOR:

Use the following checklist to evaluate student performance while repairing ejector mechanism.

RECORD THIS INFORMATION:

MANUFACTURER: _____ MODEL: _____

SERIAL #: _____

| PERFORMANCE DETERMINANTS | YES | NO |
|---|---|---|
| The preparer | | |
| - Obtained faulty disk drive. | ____ | ____ |
| - Identified and inspected ejector block. | ____ | ____ |
| - Identified and insected return spring. | ____ | ____ |
| - identified and inspected retainer spring. | ____ | ____ |
| - Identified and inspected drive door release spring. | ____ | ____ |
| - Identified and inspected drive door. | ____ | ____ |
| - identified and inspected retainer spring block | ____ | ____ |
| - Replaced malfunctioning part with new part. | ____ | ____ |
| - Conducted operational check on disk drive. | ____ | ____ |

GUIDE SHEET

DUTY: Servicing Computer Equipment

---

PERFORMANCE OBJECTIVE #128

TASK: Repair peripheral control.

STANDARD OF PERFORMANCE OF TASK:

Peripheral controls must be functional; selector knobs, switches and lights must work and control the peripheral equipment they are connected to.

SOURCE OF STANDARD:

Writing team of incumbent workers.
How To Maintain and Service Your Small Computer.
Handbook Of Computer Maintenance and Troubleshooting

CONDITIONS FOR PERFORMANCE OF TASK:

Peripheral controls to be serviced
Replacement parts
Tool kit

ENABLING OBJECTIVE:

1. Identify type of peripheral controls.
2. Determine if peripheral control should be repaired or replace.

*RESOURCES:

1. Stephenson and Cahill. How To Maintain and Service Your Small Computer. Howard W. Sams and Company, Inc., Indianapolis, IN , 1983.
2. Manufacturer's operators manual.
3. Manufacturer's technical reference manual.
4. Manufacturer's service manual.
5. Checklist - Repair peripheral control.

TEACHING ACTIVITIES:

1. Present a lecture on the different types of peripheral control.(* 1)
2. Discuss the components of a peripheral control.
3. Discuss troubleshooting procedures for a peripheral control.

TEACHING ACTIVITIES: (cont.)

4. Demonstrate troubleshooting procedures for a peripheral control.
5. Present a lecture on repair procedures for a peripheral control. (#1,2,3 & 4)
6. Demonstrate testing procedures for a peripheral control.
7. Instruct student to repair a peripheral control and perform an optional check.

CRITERION-REFERENCED MEASURE:

The student will troubleshoot a peripheral control, determine malfunctioning component, repair the peripheral and conduct an operational check.

PERFORMANCE GUIDE:

1. Obtain peripheral control to be serviced.
2. Identify malfunctioning part:
   A. Knobs.
   B. Switches.
   C. Lights.
   D. Connectors.
   E. Contacts.
   F. Cables.
3. Replace malfunctioning part with new part.
4. Test control to insure that it controls the peripheral equipment.

CHECKLIST

DUTY Servicing Computer Equipment.

TASK Repair peripheral control.

ENABLER Peripheral controls must be functional: selector knobs, switches and lights must work and control the peripheral equipment they are connected to.

STUDENT'S NAME _____ DATE _____

EVALUATOR'S NAME _____ COURSE _____

TIME : STARTED _____ COMPLETED _____

TOTAL _____

DIRECTIONS TO THE EVALUATOR:

Use the following checklist to evaluate student performance while repairing peripheral control.

RECORD THIS INFORMATION:

MANUFACTURER: _____ MODEL: _____

SERIAL #: _____

| PERFORMANCE DETERMINANTS | YES | NO |
|---|---|---|
| The preparer | | |
| - Obtained faulty peripheral control. | ____ | ____ |
| - Identified and inspected knobs. | ____ | ____ |
| - Identified and inspected switches. | ____ | ____ |
| - Identified and inspected lights. | ____ | ____ |
| - Identified and inspected connectors. | ____ | ____ |
| - Identified and inspected cables. | ____ | ____ |
| - Replaced malfunctioning part. | ____ | ____ |
| - Conducted operational check on test control. | ____ | ____ |

GUIDE SHEET

DUTY: Servicing Computer Equipment

---

PERFORMANCE OBJECTIVE #129

TASK: Repair data communication adapter.

STANDARD OF PERFORMANCE OF TASK:

Data communication adapter must be functional; adapter connector must be free of corrosion and pins straight.

SOURCE OF STANDARD:

Writing team of incumbent workers.

CONDITIONS FOR PERFORMANCE OF TASK:

Data communication adapter to be serviced
Replacement parts
Tool kit

ENABLING OBJECTIVE:

1. Identify the different types of data communication adapter.
2. Identify components of a data communication adapter.
3. Determine if data communication adapter should be repaired or replaced.

*RESOURCES:

1. Manufacturer's operator's manual
2. Manufacturer's technical reference manual.
3. Manufacturer's service manual.

TEACHING ACTIVITIES:

1. Present lecture on types and uses of data communication adapters. (*2)
2. Discuss components in a data communication adapter.
3. Present a lecture on troubleshooting and repairing a data communication adapter. (*1,2,3)
4. Discuss troubleshooting and repairing procedures for a data communication adapter.
5. Demonstrate troubleshooting and repairing procedures for a data communication adapter.
6. Discuss and demonstrate operational testing procedures for data communication adapter.

TEACHING ACTIVITIES: (cont.)

7. Instruct student to troubleshoot, repair and check a data communication adapter.

CRITERION-REFERENCED MEASURE:

The student will troubleshoot, repair and perform an operational check on the data communication adapter.

PERFORMANCE GUIDE:

1. Obtain data communication adapter to be serviced.
2. Identify malfunctioning part:
   A. Cable connectors.
   B. Cable.
   C. Selector switch.
   D. Contacts.
3. Replace malfunctioning part with new part.
4. Check adapter to insure that connection is clean and snug.

CHECKLIST

DUTY Servicing Computer Equipment.

TASK Repair data communication adapter.

ENABLER Data communication adapter must be functional; adapter connector must be free of corrosion and pins straight.

STUDENT'S NAME _____ DATE _____

EVALUATOR'S NAME _____ COURSE _____

TIME : STARTED _____ COMPLETED _____

TOTAL _____

DIRECTIONS TO THE EVALUATOR:

Use the following checklist to evaluate student performance while repairing data communication adapter.

RECORD THIS INFORMATION:

MANUFACTURER: _____ MODEL: _____

SERIAL #: _____

| PERFORMANCE DETERMINANTS | YES | NO |
|---|---|---|
| The preparer | | |
| - Obtained data communication adapter to be serviced. | ____ | ____ |
| - Identified and inspected cable connectors. | ____ | ____ |
| - Identified and inspected cable. | ____ | ____ |
| - Identified and inspected selector switch. | ____ | ____ |
| - Identified and inspected contacts. | ____ | ____ |
| - Repaired malfunctioning part if possible. | ____ | ____ |
| - Replaced part if malfunctioning part was non-repairable. | ____ | ____ |
| - Conducted operational check on data communication adapter. | ____ | ____ |

GUIDE SHEET

DUTY: Servicing Computer Equipment

---

PERFORMANCE OBJECTIVE #130

TASK: Repair expansion memory.

STANDARD OF PERFORMANCE OF TASK:

Central processing unit expanded memory capabilities must be able to load, manipulate and store information; passes diagnostic test without error.

SOURCE OF STANDARD:

Writing team of incumbent workers.

CONDITIONS FOR PERFORMANCE OF TASK:

Expanded motherboard
Expansion memory chips
Integrated circuit chip remover
Integrated circuit chip inserter
Tool kit

ENABLING OBJECTIVE:

1. Identify components of a expansion memory unit.
2. Determine if expansion memory unit should be repaired or replaced.

*RESOURCES:

1. Stephenson and Cahil. How to Maintain and Service Your Small Computer. Howard W. Sams and Company, Inc., Indianapolis, IN, 1983.
2. Manufacturer's operator's manual.
3. Manufacturer's DOS manual.
4. Manufacturer's technical reference.
5. Manufacturer's service manual.
6. Checklist - Expansion memory repair.

TEACHING ACTIVITIES:

1. Present lecture on different types of expansion memory. (*2)
2. Discuss and demonstrate cartridge expansion, printed circuit board expansion and I.C, chip expansion.

TEACHING ACTIVITIES: (cont.)

3. Discuss the components of a expansion memory unit.
4. Present lecture on repair procedures for expansion memory. (#1,2,3,4 & 5)
5. Discuss and demonstrate safety considerations when working on expansion memory.
6. Discuss and demonstrate expansion memory component repair procedures.
7. Discuss and demonstrate operational check procedures for expansion memory.
8. Assign students a computer and instruct the student to locate and identify the type of expansion memory used.
9. Instruct student to repair expansion memory and conduct an operational check.

CRITERION-REFERENCED MEASURE:

The student will identify, locate and repair or replace the expansion memory of a computer. The expansion memory must pass diagnostic test without error.

PERFORMANCE GUIDE:

1. Obtain expanded memory board to be repaired.
2. Identify malfunctioning expanded memory chip:
   A. RAM integrated circuit chip.
   B. ROM integrated circuit chip.
3. Replace malfunctioning integrated circuit chip with new integrated circuit chip.
4. Perform diagnostic test to determine if expanded memory is functional.

CHECKLIST

DUTY Servicing Computer Equipment.

TASK Repair expansion memory.

ENABLER Central processing unit expanded memory capibilities must be able to load, manipulate and store information; passes diagnostic test without error.

STUDENT'S NAME _____ DATE _____

EVALUATOR'S NAME _____ COURSE _____

TIME : STARTED _____ COMPLETED _____

TOTAL _____

DIRECTIONS TO THE EVALUATOR:

Use the following checklist to evaluate student performance while repairing expansion memory.

RECORD THIS INFORMATION:

MANUFACTURER: _____ MODEL: _____

SERIAL #: _____

| PERFORMANCE DETERMINANTS | YES | NO |
|---|---|---|
| The preparer | | |
| - Obtained faulty expanded memory board. | ____ | ____ |
| - Identified and inspected RAM integrated circuit chip. | ____ | ____ |
| - Identified and inspected ROM integrated circuit chip. | ____ | ____ |
| - Repaired malfunctioning part if possible. | ____ | ____ |
| - Replaced malfunctioning part with new part. | ____ | ____ |
| - Performed diagnostic test to insure expanded memory is functional. | ____ | ____ |

GUIDE SHEET

DUTY: Servicing Computer Equipment

---

PERFORMANCE OBJECTIVE #131

TASK: Repair memory.

STANDARD OF PERFORMANCE OF TASK:

Central processing unit's main memory capabilities must be able to load, manipulate and store information; passes diagnostic test without error.

SOURCE OF STANDARD:

Writing team of incumbent workers.

CONDITIONS FOR PERFORMANCE OF TASK:

Memoryboard to be serviced
Main memory integrated circuit chips
Integrated circuit chip remover
Integrated circuit chip inserter
Tool kit

ENABLING OBJECTIVE:

1. Identify components of a memory unit.
2. Determine if memory unit should be repaired or replaced.

*RESOURCES:

1. Stephenson and Cahil. How to Maintain and Service Your Small Computer. Howard W. Sams and Company, Inc., Indianapolis, IN, 1983.
2. Manufacturer's operator's manual.
3. Manufacturer's DOS manual.
4. Manufacturer's technical reference.
5. Manufacturer's service manual.
6. Checklist - Memory repair.
7. Visual aid - Typical memory chip.

TEACHING ACTIVITIES:

1. Present lecture on different types of memory. (#2)
2. Discuss and demonstrate cartridge memory, printed circuit board memory and I.C, chip memory.

TEACHING ACTIVITIES: (cont.)

3. Discuss the components of memory unit.
4. Present lecture on repair procedures for memory. (*1,2,3,4 & 5)
5. Discuss and demonstrate safety considerations when working on memory.
6. Discuss and demonstrate memory component repair procedures.
7. Discuss and demonstrate operational check procedures for memory.
8. Assign students a computer and instruct the student to locate and identify the type of memory used.
9. Instruct student to repair memory and conduct an operational check.

CRITERION-REFERENCED MEASURE:

The student will identify, locate and repair or replace the memory of a computer. The memory must pass diagnostic test without error.

PERFORMANCE GUIDE:

1. Obtain memoryboard to be repaired.
2. Identify malfunctioning memory integrated circuit chip.
3. Remove malfunctioning memory integrated circuit chip.
4. Insert replacement memory integrated circuit chip.
5. Perform diagnostic test to determine if memory is functioning.

# TYPICAL RAM OR MEMORY CHIP

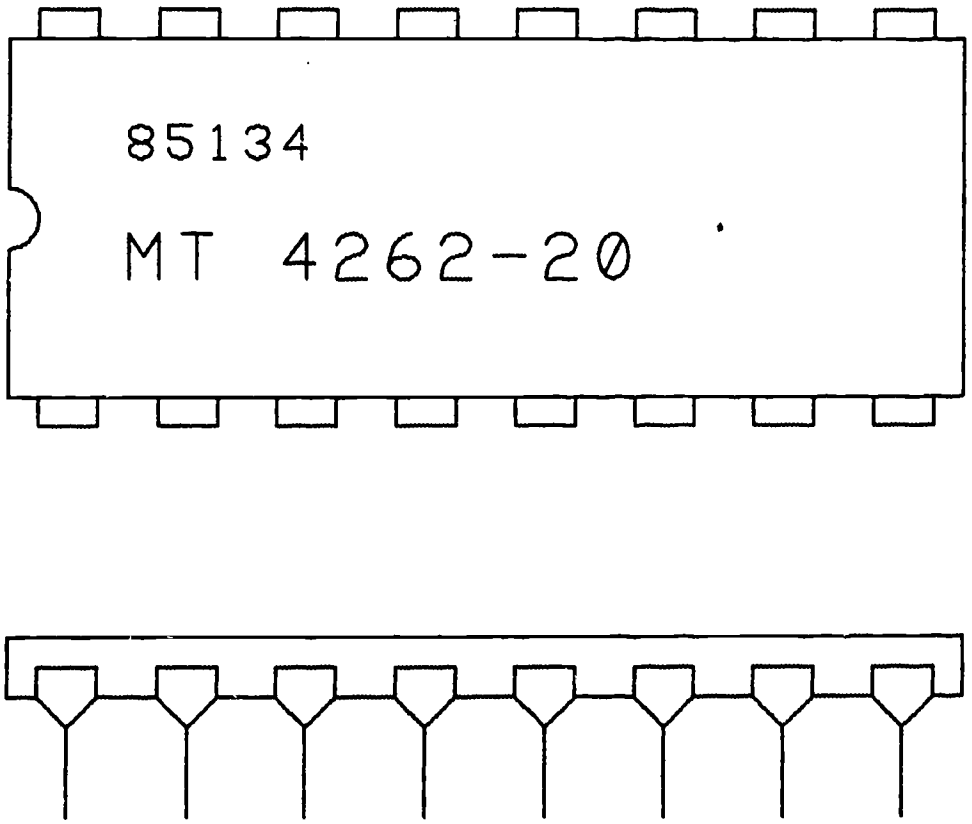

CHECKLIST

DUTY Servicing Computer Equipment.

TASK Repair memory.

ENABLER Central processing unit's main memory capabilities must be able to load, manipulate and store information; passes diagnostic test without error.

STUDENT'S NAME _____ DATE _____

EVALUATOR'S NAME _____ COURSE _____

TIME : STARTED _____ COMPLETED _____

TOTAL _____

DIRECTIONS TO THE EVALUATOR:

Use the following checklist to evaluate student performance while repairing memory.

RECORD THIS INFORMATION:

MANUFACTURER: _____ MODEL: _____

SERIAL #: _____

| PERFORMANCE DETERMINANTS | YES | NO |
|---|---|---|
| The preparer | | |
| - Obtained faulty memory board. | ____ | ____ |
| - Identified malfunctioning circuit chip. | ____ | ____ |
| - Removed malfunctioning chip. | ____ | ____ |
| - Inserted replacement chip. | ____ | ____ |
| - Performed diagnostic test. | ____ | ____ |

GUIDE SHEET

DUTY: Servicing Computer Equipment

---

PERFORMANCE OBJECTIVE #132

TASK: Repair field type product line.

STANDARD OF PERFORMANCE OF TASK:

Field upgrade must be functional according to manufacturing changes.

SOURCE OF STANDARD:

Writing team of incumbent workers.

CONDITIONS FOR PERFORMANCE OF TASK:

Manufacturer's field upgrade information
Equipment history file
Replacement parts
Tool kit

ENABLING OBJECTIVE:

1. Obtain and review field upgrade information.
2. Identify repairable components of the field product.
3. Determine if field product should be repaired or replaced.

*RESOURCES:

1. Manufacturer's field upgrade information.
2. Manufacturer's operator's manual.
3. Manufacturer's technical reference.
4. Manufacturer's service manual.
5. Checklist - Field type product line repair.

TEACHING ACTIVITIES:

1. Present lecture on the different field type product lines. (*1)
2. Discuss repairable components for the field type product line.
3. Demonstrate how to determine if the field type product line should be repaired or replaced.
4. Present lecture on repair procedure for field type product line.

TEACHING ACTIVITIES: (cont.)

5. Discuss and demonstrate repair procedures for field type products and upgrades.
6. Discuss and demonstrate operational check procedure for the field type product line.
7. Instruct student to repair a field type product line.

CRITERION-REFERENCED MEASURE:

The student will review manufacturer's upgrade information, troubleshoot, repair and conduct an operational check for a field type product line.

PERFORMANCE GUIDE:

1. Obtain equipment history file and determine the nature of upgrade performed on the equipment.
2. Review manufacturer's field upgrade information to determine nature and purpose of the change.
3. Identify malfunctioning part and replace it with a new replacement part.
4. Perform any adjustments or alignments as indicated by field upgrade information in equipment history file.
5. Test run equipment to check that upgrade operates according to manufacturer's intentions as specified in field upgrade information.

CHECKLIST

DUTY Servicing Computer Equipment. _____

TASK Repair field type product line. _____

ENABLER Field upgrade must be functional according to manufacturing changes. _____

STUDENT'S NAME _____ DATE _____

EVALUATOR'S NAME _____ COURSE _____

TIME : STARTED _____ COMPLETED _____

TOTAL _____

DIRECTIONS TO THE EVALUATOR:

Use the following checklist to evaluate student performance while repairing field type product line.

RECORD THIS INFORMATION:

MANUFACTURER: _____ MODEL: _____

SERIAL #: _____

| PERFORMANCE DETERMINANTS | YES | NO |
|---|---|---|
| The preparer | | |
| - Obtained equipment history file. | ____ | ____ |
| - Determined the nature of upgrade performed on the equipment. | ____ | ____ |
| - Reviewed manufacturer's field upgrade information. | ____ | ____ |
| - Indentified malfunctioning part. | ____ | ____ |
| - Performed adjustments or alignments as indicated by field upgrade information in equipment history file. | ____ | ____ |
| - Test ran equipment. | ____ | ____ |

GUIDE SHEET

DUTY: Servicing Computer Equipment

---

PERFORMANCE OBJECTIVE #133

TASK: Repair remote terminals.

STANDARD OF PERFORMANCE OF TASK:

Remote terminal equipment must be operational in conjunction with the main central processing unit.

SOURCE OF STANDARD:

Writing team of incumbent workers.

CONDITIONS FOR PERFORMANCE OF TASK:

Remote terminal equipment to be serviced
Replacement parts
Tool kit

ENABLING OBJECTIVE:

1. Identify components of a remote terminal.
2. Determine if remote terminal should be repaired or replaced
3. Remove and replace remote terminal.

*RESOURCES:

1. Stephenson and Cahill. How to Maintain and Service Your Small Computer. Howard W. Sams and Company, Inc., Indianapolis, IN, 1983.
2. Art Margolis. Troubleshooting and Repairing Personal Computers. Tab Books Inc., Blue Ridge Summit, PA, 1983.
3. Art Margolis. Computer Technician's Handbook, 2nd Edition. Tab Books Inc., Blue Ridge Summit, PA, 1985.
4. Art Margolis. Computer User's Guide to Electronics. Tab Books Inc., Blue Ridge Summit, PA, 1985.
5. Robert Goodman. Troubleshooting Microprocessors and Digital Logic. Tab Books Inc., Blue Ridge Summit, PA, 1980.
6. Manufacturer's operator's manual.
7. Manufacturer's technical reference.
8. Manufacturer's service manual.
9. Checklist - Remote terminal repair.

TEACHING ACTIVITIES:

1. Present lecture on types of remote terminal equipment. (#1,2,3 & 4)
2. Discuss display monitors, keyboards, storage devices, card punchers, card readers, and data communication devices.
3. Present lecture on repair procedures for different remote terminal equipment. (#1,2,3,4,5,6,7 & 8)
4. Demonstrate repair procedures for remote terminals equipment.
5. Discuss and demonstrate safety precautions to be taken when repairing remote terminals.
6. Demonstrate operational check procedures for remote terminals.
7. Instruct student to troubleshoot a remote terminal and repair faulty equipment.

CRITERION-REFERENCED MEASURE:

The student will identify the remote terminal equipment, troubleshoot and repair remote terminal equipment and conduct an operational check to insure that the remote terminal is working in conjunction with the main control processing unit.

PERFORMANCE GUIDE:

1. Identify remote terminal equipment must be operational.
   A. Display screen/monitor.
   B. Keyboard.
   C. Storage device.
   D. Card puncher.
   E. Card reader.
   F. Data communication device.
2. Identify the malfunctioning or broken part/component and remove it.
3. Replace malfunctioning or broken part/component with a new replacement part/component.
4. Test run remote terminal equipment to check if it operates in conjunction with main central processing unit.

CHECKLIST

DUTY Servicing Computer Equipment.

TASK Repair remote terminals.

ENABLER Remote terminal equipment must be operational in conjunction with the main central processing unit.

STUDENT'S NAME _____ DATE _____

EVALUATOR'S NAME _____ COURSE _____

TIME : STARTED _____ COMPLETED _____

TOTAL _____

DIRECTIONS TO THE EVALUATOR:

Use the following checklist to evaluate student performance while repairing remote terminals.

RECORD THIS INFORMATION:

MANUFACTURER: _____ MODEL: _____

SERIAL #: _____

| PERFORMANCE DETERMINANTS | YES | NO |
|---|---|---|
| The preparer | | |
| - Identified remote terminal equipment. | ____ | ____ |
| - Identified and inspected keyboard. | ____ | ____ |
| - Identified and inspected storage device. | ____ | ____ |
| - Identified and inspected card puncher. | ____ | ____ |
| - Identified and inspected card reader | ____ | ____ |
| - Identified and inspected data communication device. | ____ | ____ |
| - Removed malfunctioning/broken part. | ____ | ____ |
| - Replaced malfunctioning/broken part. | ____ | ____ |
| - Conducted test run on remote terminal equipment. | ____ | ____ |

GUIDE SHEET

DUTY: Servicing Computer Equipment

---

PERFORMANCE OBJECTIVE #134

TASK: Identify integrated circuit chips.

STANDARD OF PERFORMANCE OF TASK:

Integrated circuit chip must be identified using an integrated circuit chip chart according to manufacturer's logo, core number and batch code found on chip.

SOURCE OF STANDARD:

Writing team of incumbent workers.

CONDITIONS FOR PERFORMANCE OF TASK:

Integrated circuit chip
Integrated circuit chip chart

ENABLING OBJECTIVE:

1. Identify different types of integrated circuit chips.
2. Understand manufacturers integrated circuit numbering system.
3. Determine the different uses of integrated chips.

*RESOURCES:

1. Art Margolis. Troubleshooting and Repairing Personal Computers. Tab Books Inc., Blue Ridge Summit, PA, 1983.
2. Stephenson and Cahill. How to Maintain and Service Your Small Computer. Howard W. Sams and Company, Inc., Indianapolis, IN, 1983.
3. Art Margolis. Computer Technician's Handbook 2nd Edition. Tab Books Inc., Blue Ridge Summit, PA, 1985.
4. Art Margolis. Computer User's Guide to Electronics. Tab Books Inc., Blue Ridge Summit, PA, 1985.
5. Manufacturer's service manual.
6. Visual Aid - Integrated circuit numbering system.
7. Checklist - Integrated circuit chip identification.

TEACHING ACTIVITIES:

1. Present lecture on types of integrated circuit chips. (#1,2,3,4 & 5)
2. Discuss different manufacturers integrated circuit chips.
3. Discuss and demonstrate the removal procedure for a integrated circuit chip.
4. Discuss and demonstrate the insertion procedure for a integrated chip.
5. Discuss and demonstrate the use of a integrated circuit chip remover and inserter.
6. Discuss and demonstrate safety procedures for removing and replacing a integrated circuit chip.
7. Present a lecture on identifying a integrated circuit chip using the manufacturers numbering system. (#1,2,3,5 & 6)
8. Discuss and demonstrate manufacturers logo, prefix, suffix and data code.
9. Discuss and demonstrate the care number including logic family, logic subfamily and function code/number.
10. Assign student several different integrated circuit chips and have them identify them using the manufacturer's numbering system.
11. Instruct student to locate, remove, identify and replace a integrated circuit chip.

CRITERION-REFERENCED MEASURE:

The student will locate and remove a integrated circuit chip, identify the chip using the manufacturer's numbering system and insert a replacement chip according to core code number, batch code and manufacturers logo.

PERFORMANCE GUIDE:

1. Locate integrated circuit chip that is malfunctioning.
2. Interpret core number, batch code and manufacturing logo, and compare to the integrated circuit chip chart.
   A. Core code number:
      1. Logic family.
      2. Logic subfamily.
      3. Function of integrated circuit chip.
      4. Prefix-manufacturer, integrated circuit type.
      5. Suffix-package type, temperature range.
   B. Batch code:
      1. Year of manufacture.
      2. Production batch.
   C. Manufacturer's logo.
3. Match codes and number with chart and determine replacement integrated circuit chip.

# MANUFACTURING NUMBERING SYSTEM FOR INTEGRATED CIRCUIT CHIP IDENTIFICATION

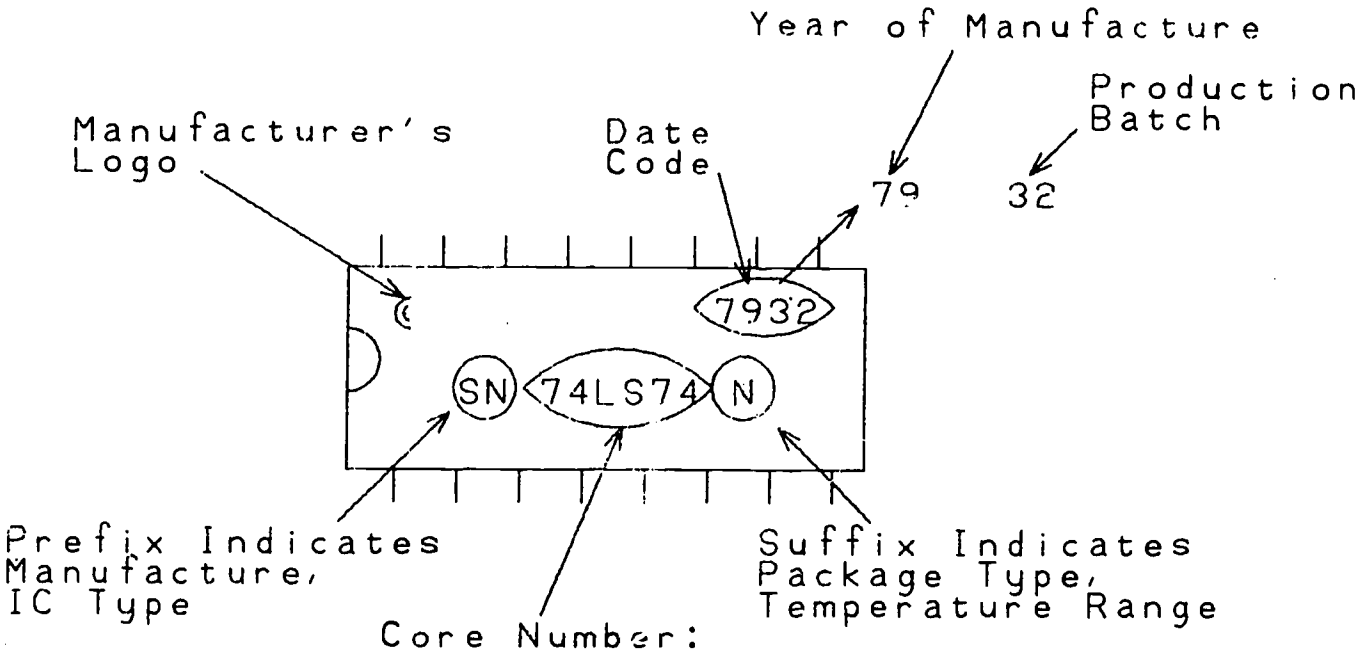


Core Number:

74 LS 74

Logic Family

Number Identifies Function of IC

Logic Subfamily:
Examples:

No Letter = TTL
C = CMOS
H = High Speed
L = Low Power
LS = Low Power/Schottky
S = Schottky

CHECKLIST

DUTY Servicing Computer Equipment.

TASK Identify integrated circuit chips.

ENABLER Integrated circuit chip must be identified using an integrated circuit chip chart according to manufacturer's logo, core number and batch code found on chip.

STUDENT'S NAME _____ DATE _____

EVALUATOR'S NAME _____ COURSE _____

TIME : STARTED _____ COMPLETED _____

TOTAL _____

DIRECTIONS TO THE EVALUATOR:

Use the following checklist to evaluate student performance while identifying integrated circuit chips.

RECORD THIS INFORMATION:

MANUFACTURER: _____ MODEL: _____

SERIAL #: _____

| PERFORMANCE DETERMINANTS | YES | NO |
|---|---|---|
| The preparer | | |
| - Located malfunctioning integrated circuit chip. | ____ | ____ |
| - Identified and interpreted core number. | ____ | ____ |
| - Identified and interpreted batch code. | ____ | ____ |
| - Identified and interpreted manufacturing number. | ____ | ____ |
| - Compared each to the integrated circuit chip chart. | ____ | ____ |
| - Matched codes and numbers with chart. | ____ | ____ |
| - Determined replacement integrated circuit chip. | ____ | ____ |
| - Obtained integrated circuit chip. | ____ | ____ |

GUIDE SHEET

DUTY: Servicing Computer Equipment

---

PERFORMANCE OBJECTIVE #135

TASK: Identify machine components and test points.

STANDARD OF PERFORMANCE OF TASK:

Machine component must pass the test and the test points for that component must be located.

SOURCE OF STANDARD:

Writing team of incumbent workers.

CONDITIONS FOR PERFORMANCE OF TASK:

Schematics
Test equipment
Service manuals

ENABLING OBJECTIVE:

1. Locate test points.
2. Understand the difference between hot test points and ground test points.

*RESOURCES:

1. Computer Facts. Howard W. Sams and Company, Inc., Indianapolis, IN.
2. Stephenson and Cahil. How to Maintain and Service Your Small Computer. Howard W. Sams and Company, Inc., Indianapolis, IN, 198[illegible].
3. Art Margolis. Computer Technician's Handbook, 2nd Edition. Tab Books Inc., Blue Ridge Summit, PA, 1985.
4. Art Margolis. Computer User's Guide to Electronics. Tab Books Inc., Blue Ridge Summit, PA, 1985.
5. Manufacturer's technical reference.
6. Manufacturer's service manual.
7. Manufacturer's schematic.
8. Visual Aid - Test equipment.
9. Checklist - Machine components and test points identified.

TEACHING ACTIVITIES:

1. Present lecture on determining component to be tested and proper test points. (*1,2,3 & 4)

2. Discuss using schematics and service manuals for identifying components and test points.
3. Present lecture on hot test points and ground test points. (#1,2,3,4,5,6 & 7)
4. Discuss and demonstrate hot test points such as: supply outlets, test point pins, signal traces, component legs, connector pins and insulated wires.
5. Discuss and demonstrate ground points such as: metal frame or chasis, grounding traces, ground leads, grounded test pins, logic ground and signal grounds.
6. Discuss and demonstrate safety precautions to be taken when working with test points.
7. Present lecture on types of test equipment. (#8)
8. Discuss and demonstrate a volt-ohm milliommeter (DVM), digital logic probe, logic pulser, oscilloscope, IC test clips, no-op tester and transistor tester. (#1,2,3 & 5)
9. Assign student a list of components to be tested and a schematic of the equipment.
10. Instruct student to identify and locate the correct test points for each component listed

CRITERION-REFERENCED MEASURE:

The student will locate the component to be tested and identify the proper test points for that component. The student will also identify the test equipment needed to properly test the component.

PERFORMANCE GUIDE:

1. Using the schematic or service manual for that particular machine, determine the machine component to be tested and its location in the machine.
2. Locate the test points for that component:
   A. Hot test point--point where current or signal is carried.
      1. Power supply outlets.
      2. Labelled test point pin.
      3. Signal trace.
      4. Component leg.
      5. Connector pin.
      6. Insulated wire.

      CAUTION: Care must be taken not to touch more than one test point at a time with the test probe or a short circuit could result.
   B. Ground test point--point grounded to outside world, usually through the third prong of the AC plug.
      1. Metal frame or chassis.
      2. Grounding traces on circuit board.
      3. Ground leads on motors, solenoids and case.
      4. Grounded test pin on circuit board.
      5. Logic ground on TTL logic circuit.
      6. Signal ground on a link between two pieces of equipment.

      NOTE: Use ground closest to test point for most accurate reading.

# TEST EQUIPMENT

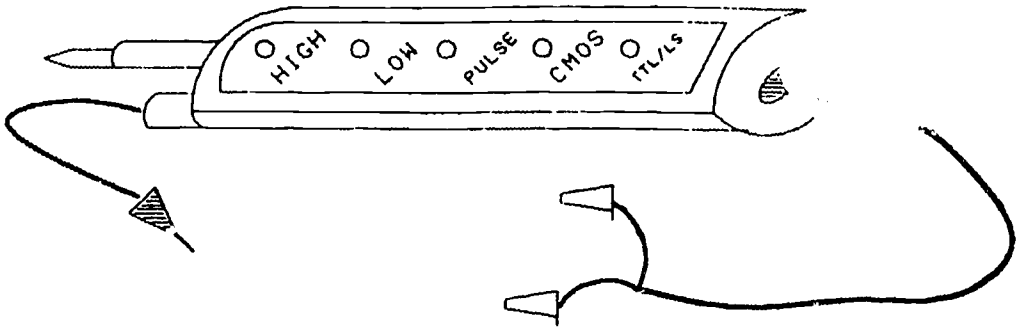


Digital Logic Probe

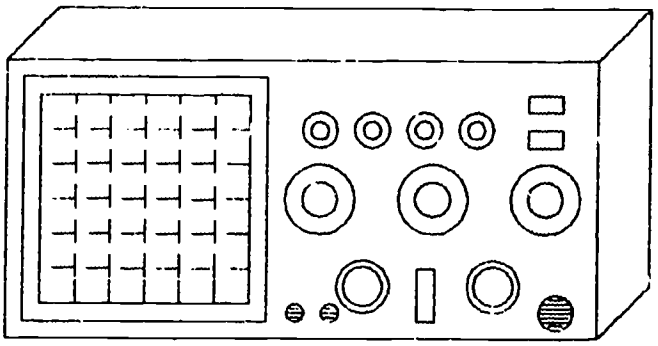

A Dual-trace Oscilloscope

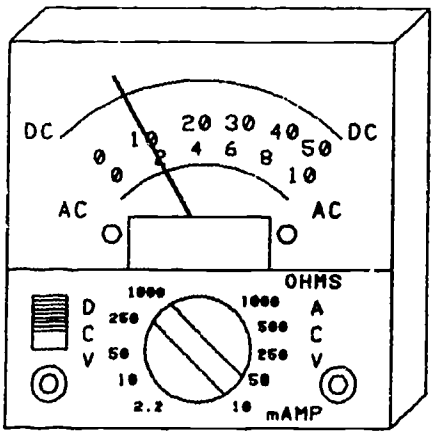


Volt-ohm-milliammeter

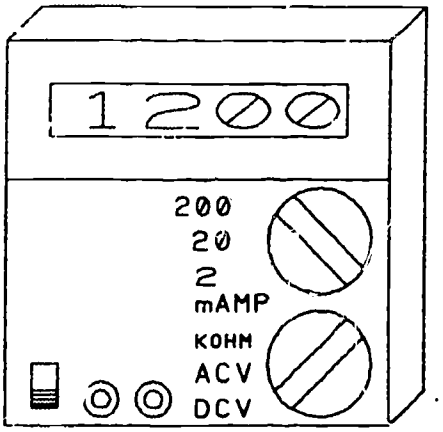


Digital
Volt-ohm-milliammeter

TYPICAL TEST POINTS FOR COMPONENTS

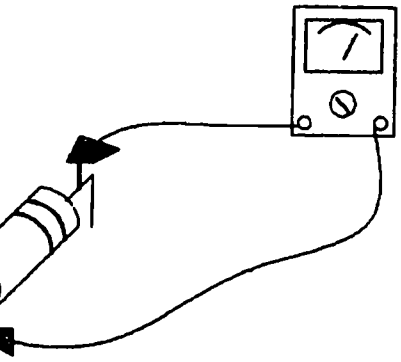

ng a Resistor

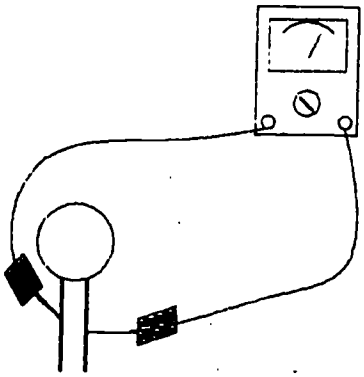

Testing a Capacitor

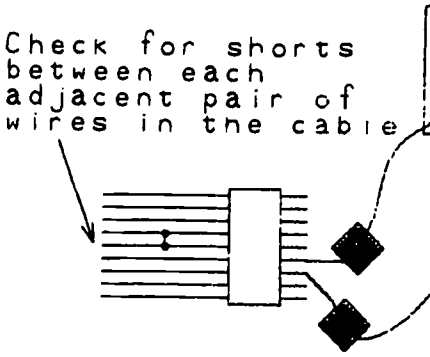


Testing Cable for

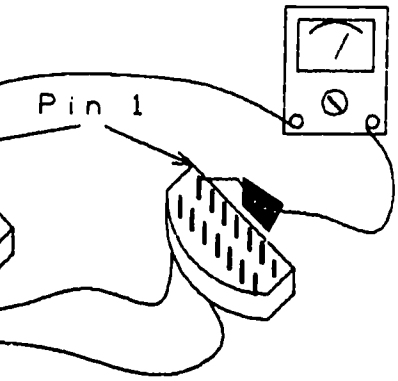


ng Cables
onnectors

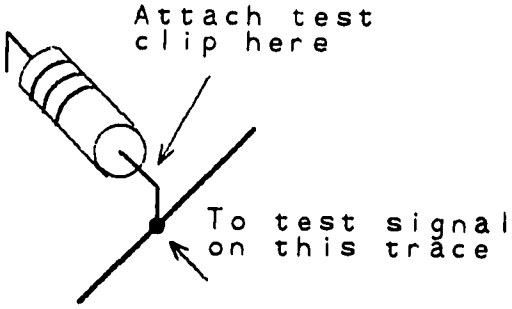


Test readings from
Circuit Trace

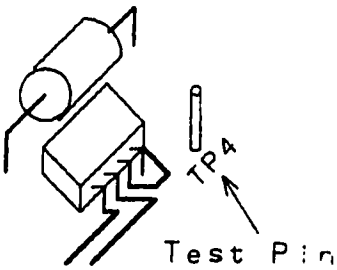


Test Pin on
Circuit Board

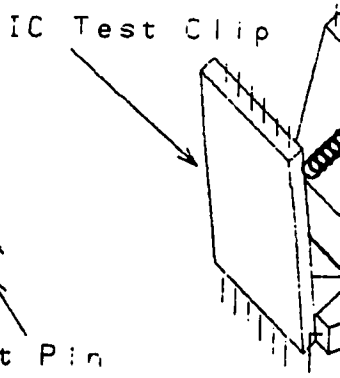


Testing a
using an

CHECKLIST

DUTY Servicing Computer Equipment.

TASK Identify machine components and test points.

ENABLER Machine component to be tested and the test points for that components must be located.

STUDENT'S NAME _____ DATE _____

EVALUATOR'S NAME _____ COURSE _____

TIME : STARTED _____ COMPLETED _____

TOTAL _____

DIRECTIONS TO THE EVALUATOR:

Use the following checklist to evaluate student performance while identifying machine components and test points.

RECORD THIS INFORMATION:

MANUFACTURER: _____ MODEL: _____

SERIAL #: _____

| PERFORMANCE DETERMINANTS | YES | NO |
|---|---|---|
| The preparer | | |
| - Used service manual to determine the machine component to be tested and its location in the machine. | ____ | ____ |
| - Located power supply outlets. | ____ | ____ |
| - Located labelled test point pin. | ____ | ____ |
| - Located signal trace. | ____ | ____ |
| - Located component leg. | ____ | ____ |
| - Located connector pin. | ____ | ____ |
| - Located insulated wire. | ____ | ____ |
| - Grounded test point. | ____ | ____ |

GUIDE SHEET

DUTY: Servicing Computer Equipment

---

PERFORMANCE OBJECTIVE #136

TASK: Set configuration switches.

STANDARD OF PERFORMANCE OF TASK:

Configuration switches must be set according to host system specifications; equipment will operate with system.

SOURCE OF STANDARD:

Writing team of incumbent workers.

CONDITIONS FOR PERFORMANCE OF TASK:

Equipment to be serviced
Operator manual
Tool kit

ENABLING OBJECTIVE:

1. Determine location of configuration switches.
2. Identify function of configuration switches.
3. Identify desired results and determine what configuration switch setting will achieve that result.
4. Understand how to read and set configuration switches.

*RESOURCES:

1. Computer Facts. Howard w. Sams and Company., Inc., Indianapolis, IN.
2. Manufacturer's operator's manual.
3. Manufacturer's DOS manual.
4. Manufacturer's technical manual.
5. Manufacturer's service manual.
6. Manufacturer's schematics.
7. Configuration switch setting chart.
8. Visual Aid - Typical configuration switch.
9. Checklist - Setting configuration switches.

TEACHING ACTIVITIES:

1. Present lecture on computer equipment that use configuration switches. (*1,2,3,4 & 5)

TEACHING ACTIVITIES: (cont.)

2. Discuss and demonstrate computers, printers, disk drives and peripheral interfaces using configuration switches.
3. Present a lecture on the function and operation of configuration switches. (#1,2,3, 4 & 5)
4. Discuss and demonstrate different modes such as graphics, test, language, machine specification etc.
5. Present lecture on reading and setting configuration switches. (#1,2,3,4,5 & 7)
6. Discuss and demonstrate the "on" position for a configuration switch.
7. Discuss an demonstrate the "off" position of a configuration switch.
8. Discuss and demonstrate how different combinations of switches "on" and "off" can produce various results.
9. Assign student a piece of computer equipment with configuration switches and a switch setting chart. (#7)
10. Instruct student to change the configuration switch setting according to the setting chart and verify if the indicated function was achieved.

CRITERION-REFERENCED MEASURE:

The student will locate the configuration switches on a piece of computer equipment and change the switch setting to obtain the desired function. The equipment must operate and perform the desired function without error.

PERFORMANCE GUIDE:

1. Power down system and unplug AC power cord.
2. Remove cover and locate configuration switches on top of main printed circuit board.
3. Locate host system specification in operator manual.
4. Set switches to match configuration in owner's manual.
   A. 1 = On
   B. 0 = Off
   NOTE: Switches read from left to right as you look at them from the front of the printer.
5. Replace cover and power cord.
6. Power up system and test run printer to insure it operates with system.

DIP SWITCHES

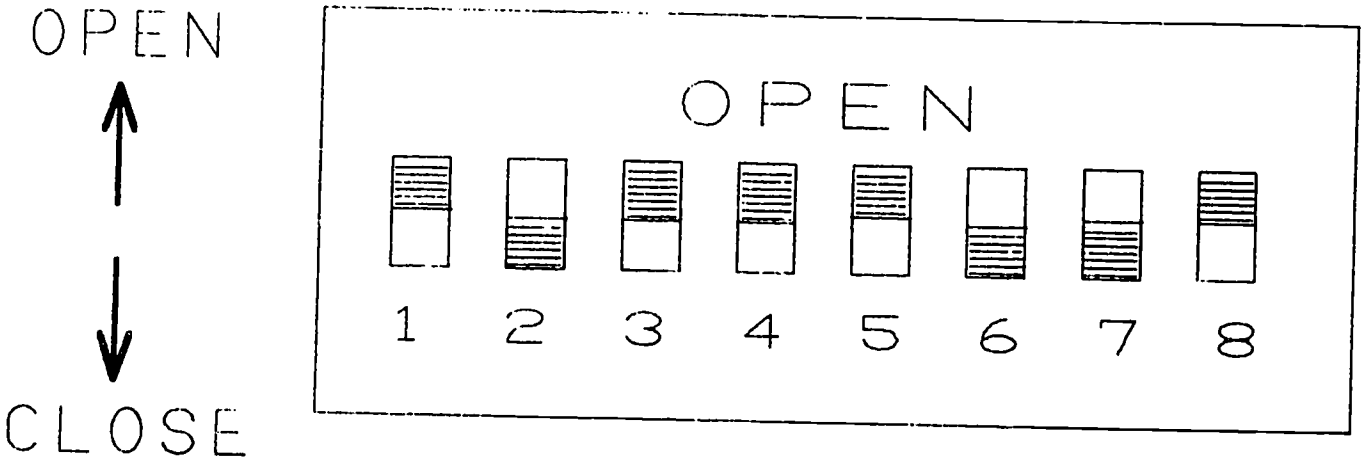

CHECKLIST

DUTY Servicing Computer Equipment.

TASK Set configuration switches.

ENABLER Configuration switches must be set according to host system specifications; equipment will operate with system.

STUDENT'S NAME _____ DATE _____

EVALUATOR'S NAME _____ COURSE _____

TIME : STARTED _____ COMPLETED _____

TOTAL _____

DIRECTIONS TO THE EVALUATOR:

Use the following checklist to evaluate student performance while setting configuration switches.

RECORD THIS INFORMATION:

MANUFACTURER: _____ MODEL: _____

SERIAL #: _____

| PERFORMANCE DETERMINANTS | YES | NO |
|---|---|---|
| The preparer | | |
| - Powered down system. | ____ | ____ |
| - Unpluged AC cord. | ____ | ____ |
| - Removed cover. | ____ | ____ |
| - Located configuration switches on top of main printed circuit board. | ____ | ____ |
| - Set switches to match configuration. | ____ | ____ |
| - Replaced cover and power cord. | ____ | ____ |
| - Test ran printer. | ____ | ____ |

GUIDE SHEET

DUTY: Servicing Computer Equipment

---

PERFORMANCE OBJECTIVE #137

TASK: Set user switches.

STANDARD OF PERFORMANCE OF TASK:

User switch must be set according to customer needs including line feed, auto line feed, form length, and spacing.

SOURCE OF STANDARD:

Writing team of incumbent workers.

CONDITIONS FOR PERFORMANCE OF TASK:

Printer to have switches set
User's manual
Tool kit

ENABLING OBJECTIVE:

1. Determine location of user switches.
2. Identify function of user switches.
3. Identify desired results and determine what user switch setting will achieve that result.
4. Understand how to read and set user switches.

*RESOURCES:

1. Computer Facts. Howard w. Sams and Company., Inc., Indianapolis, IN.
2. Manufacturer's operator's manual.
3. Manufacturer's technical manual.
4. Manufacturer's service manual.
5. Manufacturer's schematics.
6. Configuration switch setting chart.
7. Visual Aid - Typical configuration switch.
8. Checklist - Setting user switches.

TEACHING ACTIVITIES:

1. Present lecture on computer equipment that use user switches. (*1,2,3,4 & 5)
2. Discuss and demonstrate computers, printers, disk drives and peripheral interfaces using user switches.

TEACHING ACTIVITIES: (cont.)

3. Present a lecture on the function and operation of user switches. (#1,2,3, 4 & 5)
4. Discuss and demonstrate different modes such as line feed, carriage return, form length, character spacing and print style.
5. Present lecture on reading and setting user switches (#1,2,3,4,5 & 7)
6. Discuss and demonstrate the "on" position for a user switch.
7. Discuss an demonstrate the "off" position of a user switch.
8. Discuss and demonstrate how different combinations of switches "on" and "off" can produce various results.
9. Assign student a piece of computer equipment with user switches and a switch setting chart. (#7)
10. Instruct student to change the user switch setting according to the setting chart and verify if the indicated function was achieved.

CRITERION-REFERENCED MEASURE:

The student will locate the user switches on a piece of computer equipment and change the switch setting to obtain the desired function. The equipment must operate and perform the desired function without error.

PERFORMANCE GUIDE:

1. Power down system and unplug AC power cord.
2. Remove cover and locate configuration switches on top of main printed circuit board.
3. Locate host system specification in operator manual.
4. Set switches to match configuration in owner's manual.
   A. 1 = On
   B. 0 = Off
   NOTE: Switches read from left to right as you look at them from the front of the printer.
5. Replace cover and power cord.
6. Power up system and test run printer to insure it operates with system.

# SETTING OF DIP SWITCH

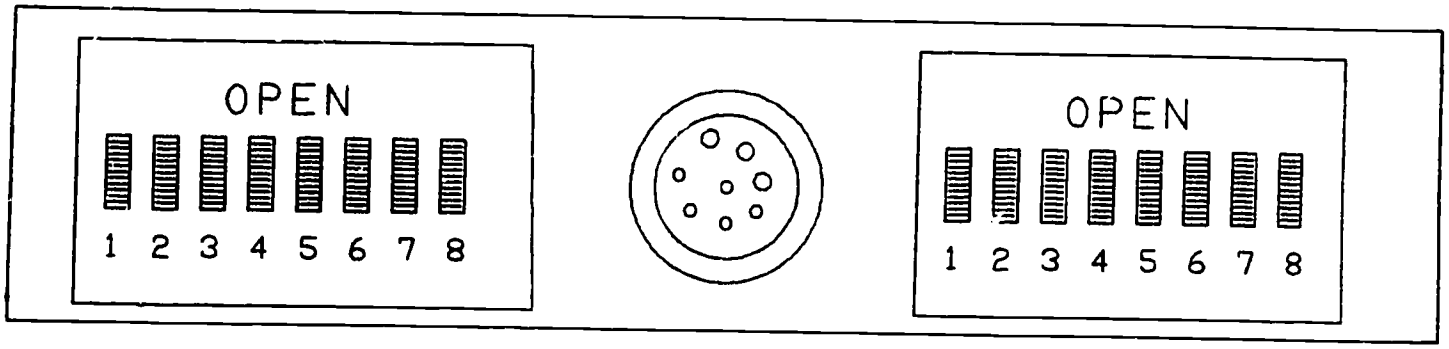


DIP Switch
SPEC 1

DIP Switch
SPEC 2

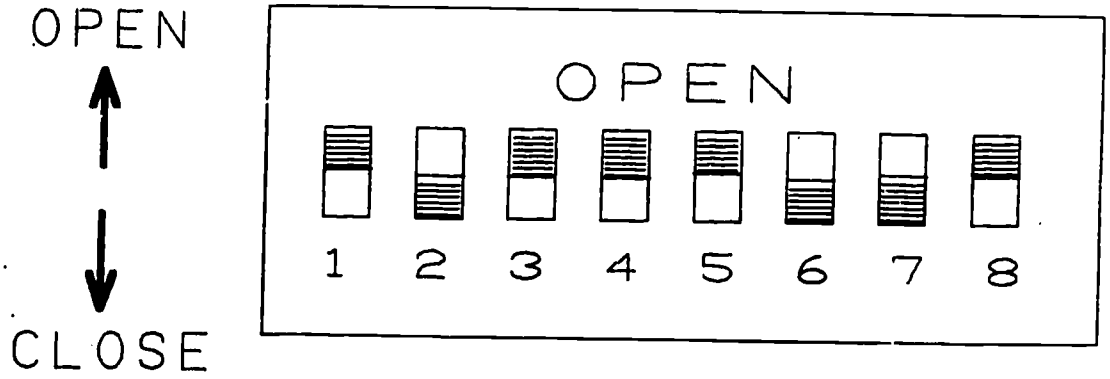

CHECKLIST

DUTY Servicing Computer Equipment.

TASK Set user switches. ____

ENABLER User switch must be set according to customer needs including line feed, auto line feed, form length, and spacing

STUDENT'S NAME _____ DATE _____

EVALUATOR'S NAME _____ COURSE _____

TIME : STARTED _____ COMPLETED _____

TOTAL _____

DIRECTIONS TO THE EVALUATOR:

Use the following checklist to evaluate student performance while setting user switches.

RECORD THIS INFORMATION:

MANUFACTURER: _____ MODEL: _____

SERIAL #: _____

| PERFORMANCE DETERMINANTS | YES | NO |
|---|---|---|
| The preparer | | |
| - Powered down system. | ____ | ____ |
| - Unpluged AC power cord. | ____ | ____ |
| - Located configuration switches. | ____ | ____ |
| - Located host system specifications. | ____ | ____ |
| - Set switches to match configuration. | ____ | ____ |
| - Replaced cover and power cord. | ____ | ____ |
| - Powered up system. | ____ | ____ |
| - Test ran printer. | ____ | ____ |

GUIDE SHEET

DUTY: Servicing Computer Equipment

---

PERFORMANCE OBJECTIVE #138

TASK: Install mechanical assembly.

STANDARD OF PERFORMANCE OF TASK:

Mechanical assembly must be functional; printer will power up and operate.

SOURCE OF STANDARD:

Writing team of incumbent workers.

CONDITIONS FOR PERFORMANCE OF TASK:

Printer to be serviced
Mechanical assembly
Service manual
Tool kit

ENABLING OBJECTIVE:

1. Identify and locate mechanical assembly.
2. Remove and replace mechanical assembly.

*RESOURCES:

1. Stephenson and Cahill. How to Maintain and Service Your Small Computer. Howard W. Sams and Company., Inc., Blue Ridge Summit, PA, 1983.
2. Manufacturer's operator's manual.
3. Manufacturer's technical reference.
4. Manufacturer's service manual.
5. Checklist - Mechanical assemble installed.

TEACHING ACTIVITIES:

1. Present a lecture on the function and location of the mechanical assembly. (*1,2,3 & 4)
2. Discuss and demonstrate pulleys, cams, levers, gears, belts, etc, that are involved in mechanical motion.
3. Present lecture on procedures for installing a mechanical assembly.
4. Discuss and demonstrate safety procedures and considerations when working on mechanical assemblies.

TEACHING ACTIVITIES: (cont.)

5. Discuss and demonstrate the procedure for removing a mechanical assembly.
6. Discuss and demonstrate the procedure for replacing a mechanical assembly.
7. Discuss and demonstrate the operational check procedure for a mechanical assembly.
8. Instruct student to identify, remove and replace a mechanical assembly.

CRITERION-REFERENCED MEASURE:

The student will identify, remove and replace a mechanical assembly must function without rubbing, binding, jamming or breaking of mechanical parts.

PERFORMANCE GUIDE:

1. Power down printer and disconnect AC power cord.
2. Remove printer case.
3. Remove central processing unit board and ground cable.
4. Remove noise filter and power switch plate.
5. Remove mechanical assembly from printer.
6. Lift mechanical assembly from printer.
7. Place mechanical assembly into printer.
8. Replace retaining screws.
9. Replace noise filter and ground cables.
10. Replace power switch cover and central processing unit board.
11. Replace printer cover and power cable.
12. Power up system and run a print sample to test printer.

CHECKLIST

DUTY Servicing Computer Equipment.

TASK Install mechanical assembly.

ENABLER Mechanical assembly must be functional; printer will power up and operate.

STUDENT'S NAME _____ DATE _____

EVALUATOR'S NAME _____ COURSE _____

TIME : STARTED _____ COMPLETED _____

TOTAL _____

DIRECTIONS TO THE EVALUATOR:

Use the following checklist to evaluate student performance while installing mechanical assembly.

RECORD THIS INFORMATION:

MANUFACTURER: _____ MODEL: _____

SERIAL #: _____

| PERFORMANCE DETERMINANTS | YES | NO |
|---|---|---|
| The preparer | | |
| - Powered down system. | ____ | ____ |
| - Disconnected AC power cord. | ____ | ____ |
| - Removed printer case. | ____ | ____ |
| - Removed central processing unit board and ground cable. | ____ | ____ |
| - Removed noise filter and power switch plate. | ____ | ____ |
| - Removed mechanical assembly from printer. | ____ | ____ |
| - Lifted mechanical assembly from printer. | ____ | ____ |
| - Placed mechanical assembly into printer. | ____ | ____ |
| - Replaced retaining screws. | ____ | ____ |

PERFORMANCE DETERMINANTS: (cont.)

| | YES | NO |
|---|---|---|
| - Replaced noise filter and ground cable. | ____ | ____ |
| - Replaced power switch cover and central processing unit board. | ____ | ____ |
| - Replaced printer cover and power cable. | ____ | ____ |
| - Powered up system and ran a print sample to test printer. | ____ | ____ |

GUIDE SHEET

DUTY: Servicing Computer Equipment

---

PERFORMANCE OBJECTIVE #139

TASK: Perform operator duties.

STANDARD OF PERFORMANCE OF TASK:

Operator duties must include powering up the system, loading and booting disk drive, and loading printer paper and ribbon.

SOURCE OF STANDARD:

Writing team of incumbent workers.

CONDITIONS FOR PERFORMANCE OF TASK:

List of operator duties
Operator manual
Computer system

ENABLING OBJECTIVE:

1. Determine operator duties to be performed.
2. Identify procedures for performing operator duties.

*RESOURCES:

1. Manufacturer's operator's manual.
2. Manufacturer's technical reference.
3. Manufacturer's service manual.
4. Checklist - Performing operator duties.

TEACHING ACTIVITIES:

1. Present lecture on types of operator duties. (*1,2 & 3)
2. Discuss and demonstrate system power-up procedures.
3. Discuss and demonstrate loading and booting a disk drive.
4. Discuss and demonstrate loading paper into printer.
5. Discuss and demonstrate identifying and replacing printer ribbon.
6. Instruct student to practice procedures for performing operator duties.
7. Discuss and demonstrate safety considerations when performing operator duties.

TEACHING ACTIVITIES: (cont.)

8. Assign student a list of operator duties to be performed.
9. Instruct student to perform operator duties.

CRITERION-REFERENCED MEASURE:

The student will perform operator duties including powering up the system, loading and booting disk drive, loading paper in printer and replacing printer ribbon.

PERFORMANCE GUIDE:

1. Power up system:
   A. Plug in AC power cord and turn on power strip (if on is used).
   B. Switch on printer.
   C. Switch on disk drive.
   D. Switch on monitor.
   E. Switch on computer.
2. Load and boot disk drive:
   A. Insert diskette into drive and shut drive door.
   B. Load program.
   C. Run program.
3. Load paper into printer.
   A. Insert paper from rear and turn paper feed knob clockwise until paper appears between the platen and the print head.
      NOTE: If the paper does not appear by turning the knob, push the paper gently while turning the knob.
   B. Lift up the friction bar roller bar and open the tractor covers to the side.
   C. Align the paper guide holes with the paper feed pins and close the tractor covers.
   D. Lower friction roller bar, position the friction rollers on the bar directly on top of the rubber tractor rings.
4. Load printer ribbon:
   A. Determine type of ribbon needed:
      1. Cartridge.
      2. Reel to reel.
      3. Fabric.
      4. Film.
   B. Load ribbon according to manufacturer specifications.

CHECKLIST

DUTY Servicing Computer Equipment.

TASK Perform operator duties.

ENABLER Service technician will be able to perform operator duties including powering up the system, loading and booting disk drive, and loading printer paper and ribbon.

STUDENT'S NAME _____ DATE _____

EVALUATOR'S NAME _____ COURSE _____

TIME : STARTED _____ COMPLETED _____

TOTAL _____

DIRECTIONS TO THE EVALUATOR:

Use the following checklist to evaluate student performance while performing operator duties.

| PERFORMANCE DETERMINANTS | YES | NO |
|---|---|---|
| The preparer | | |
| - Plugged AC power cord in. | ____ | ____ |
| - Turned on power strip. | ____ | ____ |
| - Inserted ribbon into printer. | ____ | ____ |
| - Loaded paper into printer. | ____ | ____ |
| - Turned on printer. | ____ | ____ |
| - Loaded and booted disk drive. | ____ | ____ |
| - Turned on monitor. | ____ | ____ |
| - Turned on computer. | ____ | ____ |
| - Conducted systems operational check. | ____ | ____ |

GUIDE SHEET

DUTY: Servicing Computer Equipment

---

PERFORMANCE OBJECTIVE #140

TASK: Realign read/write/verify head.

STANDARD OF PERFORMANCE OF TASK:

Read/write/verify head must be positioned directly over the center of the track it is reading, writing, or verifying.

SOURCE OF STANDARD:

Writing team of incumbent workers.

CONDITIONS FOR PERFORMANCE OF TASK:

Disk drive to be serviced
Tool kit
Exerciser disk
Alignment disk
Oscilloscope

ENABLING OBJECTIVE:

1. Identify current location of the read/write/verify head over the track.
2. Reposition read/write/verify head over the center of the track.
3. Understand a disk format and location of various tracks/sectors.
4. Operate test equipment.

*RESOURCES:


1. Computer Facts. Howard W. Sams and Company., Inc., Indianapolis, IN.
2. Stephenson and Cahill. How to Maintain and Service Your Small Computer. Howard W. Sams and Company., Inc., Indianapolis, IN, 1983.
3. Art Margolis. Computer Technician's Handbook, 2nd Edition. Tab Books Inc., Blue Ridge Summit, PA, 1985.
4. Manufacturer's operator's manual.
5. Manufacturer's DOS manual.
6. Manufacturer's technical reference.

*RESOURCES: (cont.)

7. Manufacturer's service manual.
8. Visual Aid - Test points and radial head adjustment disk format, see performance objective 61.
9. Checklist - Realign read/write/verify head.

TEACHING ACTIVITIES:

1. Present lecture on disk format. (*2,3 & 8)
2. Discuss and demonstrate track and sector locations on a disk.
3. Discuss and demonstrate disk care and handling.
4. Present lecture on read/write/verify head alignment procedures. (*1,2,3,4,5,6 & 7)
5. Discuss and demonstrate test equipment including oscilloscope, diagnostic software and exerciser program.
6. Discuss and demonstrate test points and test point locations.
7. Instruct student to practice using test equipment.
8. Discuss and demonstrate head alignment procedures.
9. Discuss safety procedures to be followed when realigning a read/write/verify head.
10. Assign student a cut of align disk drive and test equipment.
11. Instruct student to realign the read/write/verify head on a disk drive.

CRITERION-REFERENCED MEASURE:

The student will identify the current read/write/verify head position and realign the head so it is directly over the center of the track being read.

PERFORMANCE GUIDE:

1. Set up dual-trace oscilloscope.
2. Power down the system and remove the disk drive cover.
3. Connect Channel B to head test point one and to ground.
4. Connect Channel A to head test point two and ground.
5. Connect external trigger probe to the sync signal test point.
6. Insert exerciser disk into drive and boot system and load exerciser program.
7. Remove exerciser disk and insert alignment disk into drive.
8. Start head reading a track near the center of the disk.
9. Oscilloscope signals from channels A and B will be shown. When both signals are equal, the drive head is in alignment.

PERFORMANCE GUIDE: (cont.)

10. Adjust the head alignment when the two signals are unequal:
    A. Adjustment of stepper motor pulley:
        1. Loosen set screws that hold the pulley in place.
        2. Slowly turn the pulley until the two trace signals on the oscilloscope are equal.
        3. Retighten screws.
    B. Adjustment of stepper motor:
        1. Loosen stepper motor mounting screws.
        2. Slowly turn stepper motor until trace signals are equal.
        3. Retighten mounting screws.

11. Step the head in three tracks and then step it back after adjustment is complete; recheck head alignment.
12. Step head three tracks out and then step it back; recheck alignment.

    NOTE: Final setting will take in account inward and outward movement of head while reading, writing and verifying.

CHECKLIST

DUTY Servicing Computer Equipment.

TASK Realign read/write/verify head.

ENABLER Read/write/verify head must be positioned directly over the center of the track it is reading, writing, or verifying.

STUDENT'S NAME _____ DATE _____

EVALUATOR'S NAME _____ COURSE _____

TIME : STARTED _____ COMPLETED _____

TOTAL _____

DIRECTIONS TO THE EVALUATOR:

Use the following checklist to evaluate student performance while realigning read/write/verify head.

RECORD THIS INFORMATION:

MANUFACTURER: _____ MODEL: _____

SERIAL #: _____

| PERFORMANCE DETERMINANTS | YES | NO |
|---|---|---|
| The preparer | | |
| - Set up dual-trace oscilloscope. | ____ | ____ |
| - Power down the system and remove the disk drive cover. | ____ | ____ |
| - Connected channel B to head test point one and to ground. | ____ | ____ |
| - Connected channel A to head test point two and ground. | ____ | ____ |
| - Connected external trigger probe to the sync signal test point. | ____ | ____ |
| - Inserted disk and boot system. | ____ | ____ |
| - Removed exercise disk and insert alignment disk into drive. | ____ | ____ |
| - Adjusted the head alignment. | ____ | ____ |
| - Step head in three tracks. | ____ | ____ |
| - Recheck head alignment. | ____ | ____ |

687

GUIDE SHEET

DUTY: Servicing Computer Equipment

---

PERFORMANCE OBJECTIVE #141

TASK: Adjust motor speed.

STANDARD OF PERFORMANCE OF TASK:

Motor speed must be adjusted to prevent slippage or binding of motor.

SOURCE OF STANDARD:

Writing team of incumbent workers.

CONDITIONS FOR PERFORMANCE OF TASK:

Equipment to be serviced
Tool kit
Motor to be adjusted

ENABLING OBJECTIVE:

1. Determine motor speed problem.
2. Identify adjustments needed to obtain correct motor speed.

*RESOURCES:

1. Computer Facts. Howard W. Sams and Company, Inc., Indianapolis IN .
2. Stephenson and Cahill. How To Maintain and Service Your Small Computer. Howard W. Sams and Company, Inc., Indianapolis, IN , 1983.
3. Manufacturer's operator's manual.
4. Manufacturer's technical reference manual.
5. Manufacturer's service manual.
6. Checklist - Adjusting motor speed.

TEACHING ACTIVITIES:

1. Present lecture on methods for changing motor speed. (*2,3,4,5)
2. Discuss and demonstrate speed adjustment screws, potentiometer adjusting screws, belt tensions adjustments and pulley/gear size adjustments.
3. Discuss motor speed adjustment chart.
4. Present lecture on motor speed adjustment procedure. (*1,2,3,4,5)

TEACHING ACTIVITIES: (cont.)

5. Discuss and demonstrate motor speed adjustment procedure.
6. Discuss and demonstrate safety consideration for working with electric motors.
7. Assign student a piece of computer equipment with incorrect motor speed.
8. Instruct student to adjust the motor speed to the proper speed.

CRITERION-REFERENCED MEASURE:

The student will determine the best method for adjusting the motor speed and adjust the motor speed so that no slippage or binding occurs.

PERFORMANCE GUIDE:

1. Power down equipment to be serviced.
2. Dismantle equipment until motor is accessible.
3. Locate motor speed adjustment screw.
4. Power up equipment.
5. When the part is binding, turn the potentiometer adjusting screw to speed up the motor.
6. When the part is slipping, turn the potentiometer adjusting screw to slow the motor down.

CHECKLIST

DUTY Servicing Computer Equipment.

TASK Adjust motor speed.

ENABLER Motor speed must be adjusted to prevent slippage or binding of the motor.

STUDENT'S NAME _____ DATE _____

EVALUATOR'S NAME _____ COURSE _____

TIME : STARTED _____ COMPLETED _____

TOTAL _____

DIRECTIONS TO THE EVALUATOR:

Use the following checklist to evaluate student performance while adjusting motor speed.

RECORD THIS INFORMATION:

MANUFACTURER: _____ MODEL: _____

SERIAL #: _____

| PERFORMANCE DETERMINANTS | YES | NO |
|---|---|---|
| The preparer | | |
| - Powered down faulty equipment. | ____ | ____ |
| - Dismanteled equipment until motor is accessible | ____ | ____ |
| - Located motor speed adjustment screw. | ____ | ____ |
| - Powered up equipment. | ____ | ____ |
| - Checked motor for binding or slippage. | ____ | ____ |
| - Turned potentiometer adjusting screw to slow motor down. | ____ | ____ |
| - Conducted operational check. | ____ | ____ |

GUIDE SHEET

DUTY: Servicing Computer Equipment

---

PERFORMANCE OBJECTIVE #142

TASK: Check AC power source.

STANDARD OF PERFORMANCE OF TASK:

AC power receptacle must be checked to determine if voltage is present.

SOURCE OF STANDARD:

Writing team of incumbent workers.

CONDITIONS FOR PERFORMANCE OF TASK:

Voltage tester light
Voltage meter
Screwdriver

ENABLING OBJECTIVE:

1. Identify type of AC power source and voltage requirments.
2. Verify that voltage at the outlet is correct.
3. Understand AC power source test procedures.

*RESOURCES:


1. National Electrical Code 1984. NFPA No. 70-1984. National Five Protection Association, Boston, MA, 1984.
2. Time Life Books. Electrical Wiring. Home Repair And Improvement Series. Time Life Books, Inc., Alexandria, VA , 1980.
3. Art Margolis. Troubleshooting And Repairing Your Personal Computers. Tab Books Inc., Blue Ridge Summit, PA, 1983.
4. Stephenson & Cahill. How to Maintain and Service Your Small Computer. Howard W. Sams & Co., Inc., Indianapolis, IN, 1983.
5. Art Margolis. Computer Technicians Handbook 2nd Edition. Tab Books Inc., Blue Ridge Summit, PA, 1985.
7. Art Margolis. Computer User's Guide to Electronics. Tab Books Inc., Blue Ridge Summit, PA, 1985.

*RESOURCES: (cont.)

8. Encyclopedia of Electronics. Tab Professional and Reference Books, Tab Books Inc., Blue Ridge Summit, PA, 1985.
9. Technical/Service Manual.
10. Checklist - Install electrical wiring.
11. Visual Aid - Check AC power source.

TEACHING ACTIVITIES:

1. Present lecture on causes of AC power source interruptions.
2. Discuss power surge's, power outages, blown fuse's, tripped circuits, circuit over loads and faulty wiring.
3. Discuss and demonstrate safety precautions for working with electricity.
4. Present lecture on procedures for checking AC power source.
5. Discuss test equipment used to test a power source.
6. Discuss and demonstrate test procedures for checking a power source.
7. Assign student several power outlets and testing equipment.
8. Instruct student to check the power source for proper voltage.

CRITERION-REFERENCED MEASURE:

The student will determine required voltage and check the power source for proper voltage.

PERFORMANCE GUIDE:

1. Check outlet for power by placing the test probes/prongs directly into outlet sockets and the ground socket.
   NOTE: Test light will light up if power is present.
2. If power is not present at the receptacle, check the service panel for a blown fuse or tripped circuit breaker.
3. If service panel is not the problem, unscrew retaining screw from receptacle cover plate and remove plate.
4. Place the test probes/prongs of the voltage tester or meter on the bare ends of the black and the white wires, at the point where they are connected to the receptacle. Check both sets of wires in this manner.
   NOTE: If the tester bulb lights or volt meter arm moves, then there is power present at the receptacle.

CHECK AC POWER SOURCE

Receptacle Ground Check

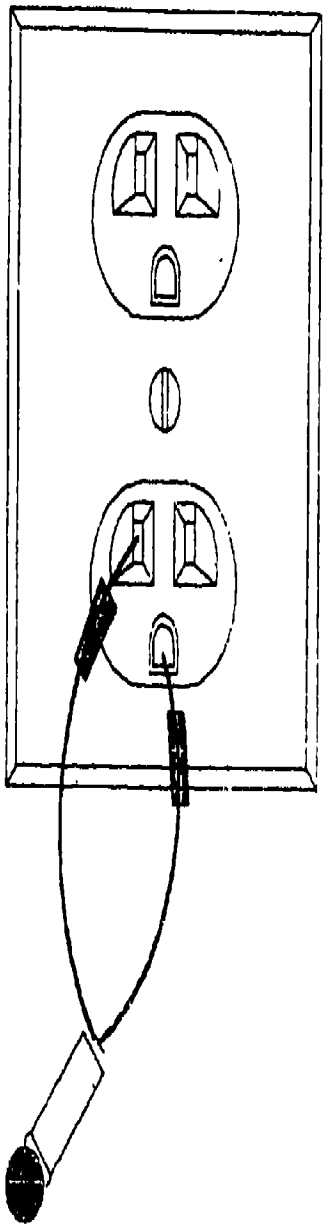

693

Cover-plate Ground Check

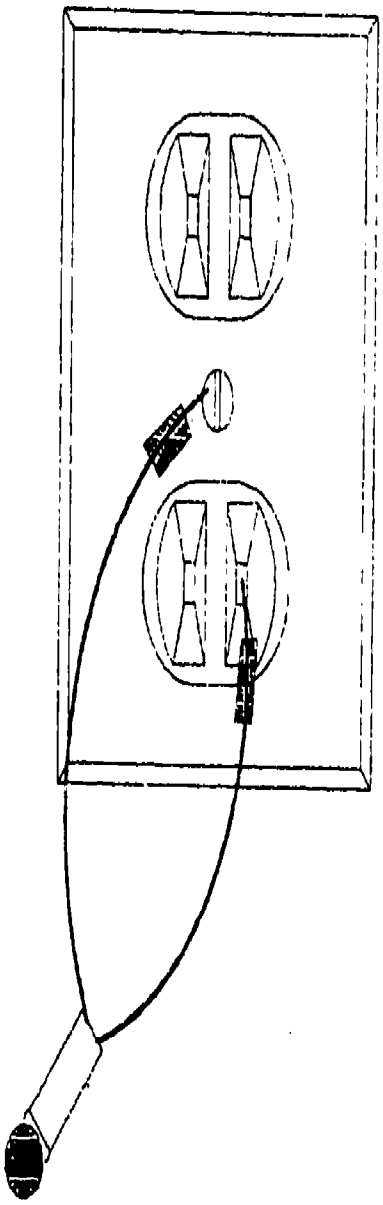

Incoming Power Check

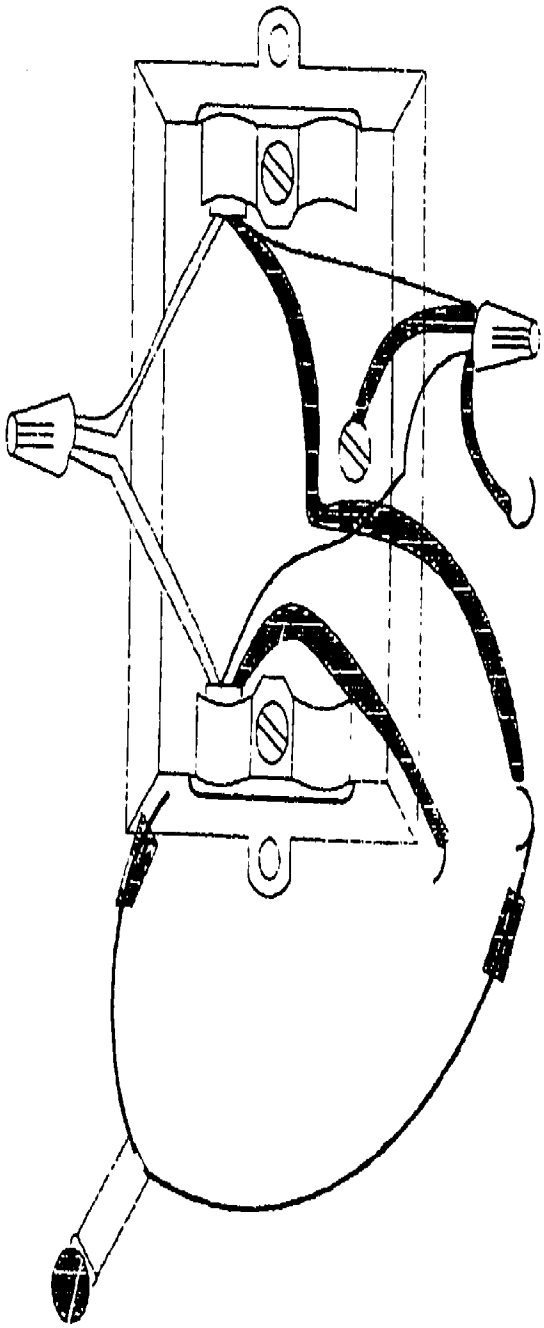

694

CHECKLIST

DUTY Servicing Computer Equipment.

TASK Checked AC power source.

ENABLER AC power receptacle must be checked to determine if voltage is present.

STUDENT'S NAME _____ DATE _____

EVALUATOR'S NAME _____ COURSE _____

TIME : STARTED _____ COMPLETED _____

TOTAL _____

DIRECTIONS TO THE EVALUATOR:

Use the following checklist to evaluate student performance while checking AC power source.

| PERFORMANCE DETERMINANTS | YES | NO |
|---|---|---|
| The preparer | | |
| - Obtained voltage tester or meter. | ____ | ____ |
| - Identified AC power outlet. | ____ | ____ |
| - Placed test probes into outlet sockets. | ____ | ____ |
| - Removed receptacle cover plate. | ____ | ____ |
| - Placed test probes on bare ends of white and black wires. | ____ | ____ |
| - Determined if power is present in wires. | ____ | ____ |
| - Check service panel if power is not present. | ____ | ____ |

GUIDE SHEET

DUTY: Servicing Computer Equipment

---

PERFORMANCE OBJECTIVE #143

TASK: Repair power supply.

STANDARD OF PERFORMANCE OF TASK:

System will power up.

SOURCE OF STANDARD:

Writing team of incumbent workers.
Troubleshooting and Repairing Personal Computers.

CONDITIONS FOR PERFORMANCE OF TASK:

Power supply to be serviced
Replacement parts/components
Voltmeter
Tool kit

ENABLING OBJECTIVE:

1. Identify components of a power supply.
2. Determine if power supply should be repaired or replaced.

*RESOURCES:

1. Computer Facts. Howard W. Sams and Company, Inc., Indianapolis, IN .
2. Stephenson and Cahill. How To Maintain and Service Your Small Computer. Howard W. Sams and Company, Inc., Indianapolis, IN , 1983
3. Art Margolis. Computer Technician's Handout, 2nd Edition. Tab Books Inc., Blue Ridge Summit, PA , 1985.
4. Art Margolis. Computer User's Guide To Electronics. Tab Books Inc., Blue Ridge Summit, PA , 1985.
5. Robert Goodman. Troubleshooting Microprocessors and Digital Logic. Tab Books Inc., Blue Ridge Summit, PA , 1980.
6. Manufacturer's operator's manual.
7. Manufacturer's DOS manual.
8. Manufacturer's technical reference manual.
9. Manufacturer's service manual.
10. Checklist - Repair power supply.
11. Visual Aid - Block diagram of power supply, see performance objective #74.

TEACHING ACTIVITIES:

1. Present lecture on the location and function of the power supply. (*1,2,3,4,5,6,7,8,9)
2. Discuss voltage requirments, power input, and voltage regulation.
3. Discuss and demonstrate safety precautions when working with power supplies.
4. Present lecture on components of a power supply. (*6,,8,9)
5. Discuss and demonstrate a filter capacitor, voltage regulator, bridge diode, voltage lines, transistors, resistors, transformers, reset buttons, cables and cable connectors.
6. Present lecture on power supply repair procedures. (*1,3,5,6,7,8,9)
7. Discuss and demonstrate power supply repair procedures.
8. Assign student a piece of computer equipment with a faulty power supply and power supply test equipment.
9. Instruct student to check and repair the power supply.

CRITERION-REFERENCED MEASURE:

The student will troubleshoot and repair a power supply. System must power up.

PERFORMANCE GUIDE:

1. Obtain power supply to be serviced.
2. Identify malfunctioning part/component.
   A. Filter capacitor.
   B. Voltage regulator.
   C. Bridge diodes.
   D. Voltage lines.
   E. Transistors.
   F. Resistors.
   G. Transformer.
   H. Reset buttons.
   I. Cables and cable connectors.
3. Remove malfunctioning part/component and replace it with a new part/component.
4. Replace power supply and power up system to check if power supply is functional.

CHECKLIST

DUTY Servicing Computer Equipment.

TASK Repair power supply.

ENABLER Determine if power supply should be repaired or replaced.

STUDENT'S NAME _____ DATE _____

EVALUATOR'S NAME _____ COURSE _____

TIME : STARTED _____ COMPLETED _____

TOTAL _____

DIRECTIONS TO THE EVALUATOR:

Use the following checklist to evaluate student performance while repairing power supply.

RECORD THIS INFORMATION:

MANUFACTURER: _____ MODEL: _____

SERIAL #: _____

| PERFORMANCE DETERMINANTS | YES | NO |
|---|---|---|
| The preparer | | |
| - Obtained faulty power supply. | ____ | ____ |
| - Identified malfunctioning part/ component. | ____ | ____ |
| - Removed malfunctioning part/component. | ____ | ____ |
| - Replaced malfunctioning part/component. | ____ | ____ |
| - Replaced power supply. | ____ | ____ |
| - Performed operational check to insure power supply is functional. | ____ | ____ |

# APPENDICES

APPENDIX A

# TASK LIST AND JOB TITLES

Computer Equipment Repair
OE: 15-0402

Electronic Sales and Service Technician
DOT:828.251-010

Electronic Field Engineer
DOT:828.261-014

DUTIES:

Tasks

## A. PERFORMING ADMINISTRATIVE FUNCTIONS

Prepare service bill.
Maintain accounts receivable/paid records.
Perform public relations activities.
Maintain labor records.
Train new service technicains.
Maintain receiving records.
Establish customer files.
Maintain in-stock inventory.
Order parts.
Maintain computer equipment inventory.
Maintain records of service tools and equipment.
Maintain shipping records.
Prepare items for shipping.
Update service manuals.
Maintain call record report.
Conduct representative meetings.
Establish customer and wquipment history file.
Calculate equipment repair cost.
Calculate system installation cost.
Update on-site maintenance log.

## B. MAINTAINING CUSTOMER SERVICE

Answer customer questions.
Troubleshooting customer problems.
Determine repair method.
Demonstrate computer equipment functions at store.
Demonstrate software functions.

## C. INSTALLING COMPUTER EQUIPMENT

Determine customer requirements.
Design system layout.
Transport equipment.
Set up equipment.
Perform installation tests.

C. INSTALLING COMPUTER EQUIPMENT (cont.)

Demonstrate usage of system on site.
Complete warranty cards.
Construct cables.

D. EVALUATING DIAGNOSTICS

Conduct mother board RAM test.
Conduct mother board ROM test.
Conduct programmers aid test.
Conduct keyboard test.
Conduct paddle/button test.
Conduct tape read/write/verify test.
Conduct color bar test.
Conduct graphics tablet test.
Conduct basic/integer ROM card test.
Conduct language card test.
Conduct disk interface card test.
Conduct printer card test.
Conduct serial/comm. card test.
Conduct monitor test.
Conduct oscilloscope test.
Conduct data communication line test.
Interpret diagnostic flow charts.

E. MAINTAINING COMPUTER EQUIPMENT

Clean metallic parts.
Clean non-metallic parts.
Clean electrical connections.
Clean cable connections.
Clean printer head.
Clean disk drive head.
Clean and demagnetize tape head.
Lubricate metallic mechanical parts.
Lubricate non-metallic parts.
Adjust mechanical assemblies.
Adjust and alignDisk drive head.
Adjust and align tape head.
Set disk read/write/verify speed.
Set tape read/write/verify speed.
Clean or replace filters.
Clean outside case/cover.

F. SERVICING COMPUTER EQUIPMENT

Interpret troubleshooting charts.
Interpret chipswapping charts.
Interpret schematics.
Interpret manufactiuring upgrade.
Remove and install cover.
Install keyboard.
Install motherboard.
Install power supply.

F. SERVICING COMPUTER EQUIPMENT (cont.)

Install analog board.
Install disk drive assembly.
Install main logic assembly.
Install integrated circuit chips.
Install power light.
Install on-off switch.
Install main printed circuit board.
Install power sup. print. cir. board.
Install drive motor.
Install print hammer.
Install print mechanism.
Install carriage assembly.
Install paper feed assembly.
Install drive indicator light.
Install peripheral conn. cables.
Install peripheral connections.
Install circuit/language cards.
Install modem coupler.
Install tape transport assembly.
Install read/write/verify head.
Install modem set switch.
Install ribbon assembly.
Install drive belts.
Install AC input connections.
Install fuse holders and fuses.
Install ejector mechanism.
Install cathode ray tube.
Install configuration switches.
Install peripheral controls.
Install data communications adapter.
Install expansion memory.
Install main memory.
Install field type product line.
Install remote terminals.
Install electrical wiring.
Install keys on keyboard.
Repair keyboard.
Repair motherboard.
Repair analog board.
Repair disk drive assembly.
Repair logic assembly.
Repair on-off switch.
Repair mechanical assembly.
Repair printed circuit board.
Repair drive motor.
Repair carriage assembly.
Repair paper feed assembly.
Repair circuit/language card.
Repair tape transport assembly.
Repair print mechanism.
Repair read/write/verify head.
Repair ribbon assembly.
Repair ejector mechanism.
Repair peripheral control.
Repair data communication adapter.

F. SERVICING COMPUTER EQUIPMENT (cont.)

Repair expansion memory.
Repair memory.
Repair field type product line.
Repair remote terminals.
Identify integrated circuit chips.
Identify machine components and test points.
Set configuration switches.
Set user switches.
Install mechanical assembly.
Perform operator duties.
Realign read/write/verify head.
Adjust motor speed.
Check AC power source.
Repair power supply.

## APPENDIX B

## DEFINITION OF TERMS

A number of terms frequently used in this manual may be unfamiliar to the reader; others may be familiar but in the context of this manual have been assigned special meanings. To assist the catalog user, the following definitions are provided.

1. Affective. Skills which emphasize an attitude, feeling, emotion, or degree of acceptance and rejection.

2. Checkpoint. A point in the development of the curriculum guide when materials must be sent to V-TECS control office for quality review.

3. Cognitive. Skills which emphasize the recall of knowledge and development of intellectual abilities.

4. Competency. The ability (including knowledge, skills, and/or attitudes) to perform a specific task or duty successfully.

5. Competency-based vocational education. A methodology of instruction that (a) identifies the competencies needed for on-the-job performance; (b) informs students and teachers of the precise and detailed learning objectives required to achieve these competencies; (c) emphasizes high performance standards in testing, course requirements, and/or graduation; and (d) facilitate learning by letting each student master the tasks prior to advancing to another.

6. Criterion-referenced measures. An evaluative procedure used to determine if a student has mastered a performance objective.

7. Domain. A group of related jobs within an occupational area.

8. Duty. One of the distinct, major work activities in an occupational area. A duty is made of numerous tasks. A duty lends itself to the design of units of instruction.

9. Enabling objectives. Objectives identifying support knowledge, and subskills, that are prerequisites to the mastery of a task.

10. Occupational inventory. An instrument used to obtain responses from workers on what duties and tasks are actually performed in an occupational area.

11. Performance checklist. A list of performance steps derived from the performance guide to record acceptable or unacceptable performance of each step of a task.

12. Performance guide. A step-by-step description of how a task is ordinarily performed on the job.

13. Performance objective. A statement of what the learner must do, in observable and measurable terms.

    a. Conditions: "Given what?"
    Describes the situation, including tools and equipment to be used, and limits under which the tasks will be performed.

    b. Task: "Does what?"
    States the observable activity the learner will perform.

    c. Standard: "How well?"
    Indicates performance required of a successful incumbent worker in an actual job environment.

14. Psychomotor. Skills which emphasize manipulation of materials or tools.

15. Quality review. A review of content by V-TECS director or designated representative to examine quality of content
format, and style of curriculum guide.

16. Resources. Materials which are used to develop instruction and/or learn specific objectives.

17. State-of-the-art reference. Current materials from which information or resources can be found to facilitate instruction.

18. Task. A unit of work with a beginning and an ending which is measurable and observable.

19. Task list. A list of individual tasks which correspond to a specific job title(s) derived from V-TECS catalogs.

20. Teaching activities. Methods and/or procedures for delivering instructional contents to students.

APPENDI C

## TOOL AND EQUIPMENT LIST

Tool/Equipment

- Flashlight
- Alcohol
- Dental mirror
- Needles/pins, package of assorted sizes
- Adjustable wrench
- Digital logic probe
- Digital voltmeter
- Nonresidue spray cleaner
- Circuit-board puller
- Parts manual
- Combination wrench set
- Disks, blank
- Voltmeter
- Wire strippers
- Clean dry cloth
- Socket set, standard
- Technical manual
- Drill bit set
- Lubricating grease
- Oscilloscope
- Chip (integrated circuit) inserter
- Feeler gauge
- Electrician pliers
- Ruler, 25 ft. retractable tape
- Adjustable pliers
- Soldering tool
- Wire, assorted gauges (sizes)
- Tweeking tools (non-metal adjusting tools)
- Modum
- Tweezers
- Bristol wrench
- Nut driver set
- Wired alligator clips
- Logic pulser
- Socket set, metric
- Disks, diagnostic
- Electronic/computer books & magazines
- Open end wrench set
- Solder
- Allen wrench set
- Electronic tape
- Grip tip pliers
- Fedron (rubber cleaner)

Tools/Equipment

Lubricating oil
Spring hook
Cotton swab
Printer
Brush, fine bristle
Cleaning solution
Combination gauge
No-op tester
Phillip screwdriver, assorted sizes
Magnet
Burnishing fluid (corrosion remover)
Specialized test equipment
Vise grip pliers
Central processing unit
Dies (wire cutters)
Disk file cabinet
Drill
Spring clip pliers
Frequency counter
Screwdriver gripping tip
Sponge
Brush, stiff bristle
Heat sink
Schematics
Hammer
Hand cleaner
Heat gun
Small 1 lb. weight
Surgical pliers
Thread-lock compound
Disk drive
Channel lock pliers
Flute spline wrench set
Box wrench set
Microfiche reader
Circuit-board vise
Spring scale or postage scale
Solder sucker
Monitor (computer)
Metal hand file set
Microfiche
Ruler, 12 inch
Exacto razor knife
Flat tip screwdriver, assorted sizes
Chip (integrated circuit) remover
Wire wrap extractor
Wire wrap tool
Transistor tester
Flux
Wire gauge
Integrated circuit test clip
Needle nose pliers
Screw starter
Solder wick

Tools/Equipment

- Breakout box
- Micrometer
- Snap ring pliers
- Dust-off spray
- Automotive ignition wrench set
- Connector-gender changers
- Pocket knife (2 or 3 blades)
- Video patch cord

APPENDIX D

## BIBLIOGRAPHY


1. Abacus Software. 1541 Repair and Maintenance Handbook. Grand Rapids, MI, 1985.

2. Abacus Software. The Anatomy of the 1541. Grand Rapids, MI, 1985.

3. Ace. Communications Handbook. Interstate Printers, Inc., Danville, IL, 1983.

4. Apple Computer, Inc., The Applesoft Tutorial. Cupertino, CA, 1979.

5. Baron, Steinfield, and Schultheis. Practical Record Keeping, Fifth Edition. South-Western Publishing Company, Cincinnati, OH, 1983.

6. Baron, Steinfield, and Schultheis. Working Guide and Working Papers for General Accounting. Gregg Division, McGraw-Hill Book Company, New York, NY, 1976.

7. Baron, Steinfield, and Schultheis. Working Papers and Supplementary Items for Practical Record Keeping and Bookkeeping. South-Western Publishing company, Cincinnati, OH, 1983.

8. Buescher, W. Instant Meeting Planning. Interstate Printers and Publishers, Danville, IL.

9. Commodore Business Machines, Inc., Commodore User's Manual. Wayne, PA, 1983.

10. Cordinal Software. 1541 Physical Exam. Wood Bridge, VA, 1985.

11. Fujitsu America, Inc., Dynamic Random Access Memory. Santa Clara, CA, 1982.

12. Gibilisco, Stan. Encyclopedia of Electronics. Tab Books, Inc., Blue Ridge Summit, PA, 1985.

13. Goodman, Robert. Troubleshooting Microprocessors and Digital Logic. Tab Books, Inc., Blue Ridge Summit, PA, 1980.

14. Howard W. Sams and Company, Inc., Computer Facts. Indianapolis, IN, 1984.

15. Howard W. Sams and Company, Inc., Semi Conductor General Purpose Replacements. Indianapolis, IN, 1975.

16. Howard W. Sams and Company, Inc., Service Data. Computer Facts. Indianapolis, IN, 1984.

BIBLIOGRAPHY (cont.)


17. Howard W. Sams and Company, Inc., Servicing Data for Computer Facts. Indianapolis, IN, 1984.

18. Howard W. Sams and Company, Inc., Television Servicing with Basic Electronics. Indianapolis, IN, 1984.

19. Huffman and Stewart. Activity Guide and Working Papers for General Accounting. Gregg Division, McGraw-Hill Book Company, New York, NY, 1976.

20. Huffman and Stewart. General Record Keeping, Seventh Edition. Gregg Division, McGraw-Hill Book Company, New York, NY, 1976.

21. Intel Corporation. Component Data Catalog. Santa Clara, CA, 1981.

22. Intel Corporation. Systems Data Catalog. Santa Clara, CA, 1981.

23. Maguire, Byron. Handbook of Computer Maintenance and Troubleshooting. Reston Publishing Company, Inc., Reston, VA, 1985.

24. Margolis, Art. Computer Technician's Handbook, 2nd Edition. Tab Books Inc., Blue Ridge Summit, PA, 1985.

25. Margolis, Art. Computer User's Guide to Electronics. Tab Books, Inc., Blue Ridge Summit, PA, 1985.

26. Margolis, Art. Troubleshooting and Repairing Personal Computers. Tab Books Inc., Blue Ridge Summit, PA, 1983.

27. Molecular Computer AP/86 and Terminal Concentrator. San Jose, CA, 1984.

28. Molecular Computer Series 36 Manual. San Jose, CA, 1984.

29. Mostek Z80 Microcomputer Systems. Carrollton, TX, 1984.

30. Motorola Inc., MOS Integrated Circuit Groups, Microprocessor Division. Motorola Microprocessors Data Manual. Austin, TX, 1978.

31. Motorola Semiconductor. Motorola Linear and Interface Circuits. Phoenix, AZ, 1983.

32. National Five Protection Association. National Electrical Code 1984, NFPA. No. 70-1984. Boston, MA, 1984.

33. National Semiconductor. CMOS Databook. Santa Clara, CA, 1978.

34. National Semiconductor. Interface Databook. Santa Clara, CA, 1980.

BIBLIOGRAPHY (cont.)


35. National Semiconductor. Linear Databook National Semiconductor. Santa Clara, CA, 1982.

36. National Semiconductor. MOS/LSI Databook. Santa Clara, CA, 1977.

37. National Semiconductor. TTL Databook. Santa Clara, CA, 1976.

38. National Semiconductor Corporation. Voltage Regulator Handbook National. Santa Clara, CA, 1977.

39. Project-recorder Belt Corporation. Comprehesive Cross Reference Belt Guide. Whitewater, WI. 1983.

40. Roberts, H. Roberts Rules of Order. Printers and Publishers. Danville, IL, 1979.

41. Radio Shack. Basic Computer Language. Fort Worth, TX, 1980.

42. Rosenberg, Swinney, and Van Sickle. Projects in Business Record Keeping. South-Western Publishing Company. Cincinnati, OH, 1985.

43. Semiconductor and IC Sales and Service Division. Hitachi Full Line Condensed Catalog. San Jose, CA, 1982.

44. Signetics Bipolar and MOS Memory. Sunnyvale, CA, 1978.

45. Signetics Logic - TTL Data Manual. Sunnyvale, CA, 1978.

46. Stephenson and Cahill. How To Maintain and Service Your Small Computer. Howard W. Sams and Company, Inc., Indianapolis, IN, 1983.

47. Technical Publications Department. NCR Data Communications Concepts. Howard W. Sams and Company, Inc., Indianapolis, IN, 1978.

48. TIME Life Books. Electrical Wiring. Home Repair and Improvement Series. Time Life Books, Inc., Alexandria, VA, 1980.

49. TRS-80-Non Prorpietary. RPM to the Rescue. Silicon Express, Colombus, OH, 1980.

50. TRS-80-Non Propietary. System Diagnostics. Howe Software, New York, NY, 1978.

51. United Technical Publications Inc., IC Master. Cox Broadcasting Corporation. New York, NY, 1985.

52. Universal Software. Disk Drive Alignment. CSM. Claremont, NH, 1980.

53. Zilog. Components and Development Systems. Cupertine, CA, 1979.