DOCUMENT RESUME

ED 272 709 CE 044 808

TITLE	Apprentice Food Service Specialist (AFSC 62230).
INSTITUTION	Air Univ., Gunter AFS, Ala. Extension Course Inst.
PUB DATE	21 Jul 86
NOTE	198p.; Supersedes ED 221 680.
PUB TYPE	Guides - Classroom Use - Materials (For Learner) (051)
EDRS PRICE	MF01/PC08 Plus Postage.
DESCRIPTORS	*Apprenticeships; Bakery Industry; Behavioral Objectives; *Cooking Instruction; Correspondence Study; *Food Handling Facilities; *Food Service; Foods Instruction; Learning Activities; Military Personnel; Military Training; *Occupational Home Economics; Postsecondary Education; *Sanitation; Supervisory Methods
IDENTIFIERS	Air Force; Military Curriculum Materials

ABSTRACT

This two-volume student text is designed for use by Air Force personnel enrolled in a self-study extension course for apprentice food service specialists. Covered in the first volume are fundamentals of food preparation and service (careers in food service, food service sanitation, principles of food preparation and service, and baking fundamentals and production of pastry). The second volume deals with the fundamentals of food service equipment and management and special feeding situations. Each volume in the set contains a series of lessons, exercises at the end of each lesson, a bibliography, and answers to the exercises. Volume review exercises are also included. (MN)

APPRENTICE FOOD SERVICE SPECIALIST

(AFSC 62230)

Extension Course Institute
Air University

ECI COURSE MATERIALS SHIPPING LIST

I

COURSE NUMBER	COURSE TITLE	EFFECTIVE DATE
62230	APPRENTICE FOOD SERVICE SPECIALIST (AFSC 62230)	21 Jul 86

INSTRUCTIONS: The following materials are needed to complete this course. Check this list immediately upon receiving your course package, and if any materials are missing or incorrect (numbers don't match), notify ECI immediately. Use the ECI Form 17 for this purpose, and be sure to include your identification number, address, course and volume number, and VRE form designation (if a VRE is involved). Send all correspondence separately from your answer sheet.[1]

ITEM	TYPE	DESIGNATION OR TITLE	INVENTORY CONTROL NUMBER	VRE ANSWER SHEET IDENTIFICATION
3	VOL	VOL 1, Fundamentals of Food Preparation and Service	62230 01 8605	
4	VRE	VOLUME REVIEW EXERCISE (VOL 1)	62230 01 26	62230 01 26
5	VOL	VOL 2, Fundamentals of Food Service Equipment and Management	62230 02 8605	
6	VRE	VOLUME REVIEW EXERCISE (VOL 2)	62230 02 24	62230 02 24
		NOTES: DIRECT ANY QUESTIONS OR COMMENTS RELATING TO ACCURACY OR CURRENCY OF TEXTUAL MATERIALS TO AUTOVON 926-3178.		

[1]*SEE REVERSE SIDE FOR ADDITIONAL INSTRUCTIONS.*

ECI FORM JUN 84 25 PREVIOUS EDITION WILL BE USED.

62230 01 8605

CDC 62230

APPRENTICE FOOD SERVICE SPECIALIST

(AFSC 62230)

Volume 1

Fundamentals of Food Preparation and Service

Extension Course Institute
Air University

Prepared by
SMS Kenneth F. Quesinberry Jr.

Reviewed by
Doris Sartor

Edited by
Tommie F. Davis

3440TH TECHNICAL TRAINING GROUP (LOGISTICS)
3400 TECHNICAL TRAINING WING (ATC)
LOWRY AIR FORCE BASE, COLORADO 80230-5000

EXTENSION COURSE INSTITUTE (AU)
GUNTER AIR FORCE STATION, ALABAMA 36118-5643

Preface

THE MISSION of the Air Force is the defense of our Nation. How well the Air Force accomplishes its mission depends, to a large degree, upon the attitudes of its personnel toward their jobs and organizations. Attitudes, working conditions, and personnel needs (clothing, housing, and dining facilities) go together to help form a basis for attitudes. Here is where you come in. You hold in your hands the health and happiness of the Air Force, for, as the saying goes, "An Army travels on its stomach," and you are the one who will prepare the food for the Air Force stomach. Because of local conditions, some adverse factors cannot be completely corrected, but an organization that supplies good, tasty, and nourishing food is characterized by efficiency and high morale. So, if it is an opportunity for service to the Air Force that interests you, look no further. Few career fields offer greater opportunities than the Food Service Career Field.

This career development course consists of two volumes.

In Chapter 1 of this volume you will be introduced to the Food Service Career Field - the career fields structure, career ladder advancement, and duties and responsibilities of food service personnel. Also, we will cover the food service organizational structure and responsibilities.

Chapter 2 covers sanitation and personal hygiene standards. Communicable diseases, their causes, and preventive measures are also covered. Cleaning objectives, materials, and methods are explained. Methods used to control insects and rodents as they pertain to dining facilities are also discussed.

In Chapter 3 we cover the subject of nutrition. This includes the elements of nutrition and conservation of nutrients. We also cover measuring standards and cooking terms, cooking methods, meat identification, principles of food preparation, increasing/decreasing standardized recipes, waste prevention measures, progressive cooking, quality of taste and garnishing, and finally basic serving techniques and procedures.

In Chapter 4 we discuss baking fundamentals and pastry production to include baking terminology and the functions of baking ingredients.

Code numbers appearing on figures are for preparing agency identification only.

The inclusion of names of any specific commercial product, commodity, or service in this publication is for information purpose only and does not imply indorsement by the Air Force.

To get an *immediate response* to your questions concerning subject matter in this course, call the author at AV 926–3178 between 0800 and 1600 (MST), Monday through Friday. Otherwise write the author at 3440 TCHTG/TTMXF–5000, to point out technical errors you find in the text, Volume Review Exercises, or Course Examination. Sending subject matter questions to ECI slows response time.

NOTE: Do not use the Suggestion Program to submit changes to this course.

Consult your education officer, training officer, or NCO if you have questions on course enrollment or administration, Your Key to a Successful Course, and irregularities (possible scoring errors, printing errors, etc.) on the Volume Review Exercises and Course Examination. Send questions these people can't answer to ECI, Gunter AFS AL 36118–5643, on ECI Form 17, Student Request for Assistance.

This volume is valued at 21 hours (7 points).

Material in this volume is reviewed annually for technical accuracy, adequacy, and currency. For SKT purposes the examinee should check the Index of ECI Study Reference Material to determine the correct references to study.

Contents

NOTE: This course teaches through numbered lesson segments, each containing a behavioral objective, text, and exercises. The objective sets your learning goal. The text gives you the information you need to reach that goal, and the exercises let you check your achievement. When you complete each segment, see whether your answers match those in the back of the volume. If your response to an exercise is incorrect, review the objective and its text.

Introduction to the Service Career Field

YOU ARE NOW actively engaged in gaining the necessary skill and knowledge needed for advancement in the Food Service Career Field. Your effort determines whether you can progress to a higher skill level, qualify for greater responsibility and authority, and eventually become a proficient food service supervisor.

In this chapter, you will be introduced to the Food Service Career Field, the career field structure, career ladder advancement, and duties and responsibilities of food service personnel. We will also cover publications concerning food service. A complete understanding of your career field is necessary to your career development and your performance of duties in the Food Service Field.

Let's first examine the makeup of your career field and how you fit into it.

1-1. Your Career Field

An organization as large as the Air Force employs thousands of persons. To identify and control these persons, a system known as the Airman Career Program was developed. It was under this program that the Food Service Career Field was established.

Setting up the Airman Career Program involved isolating and identifying every single task required to carry out the Air Force mission. The classification of these tasks is known as functional grouping (the grouping of related positions on the basis of similarity of education, training, experience, and other abilities of the people who perform in the positions). All positions that require essentially the same basic abilities are grouped into Air Force specialties (AFS). While you are not expected to be able to do each duty of your AFS [illegible] time you will probably d[illegible] st[illegible] duties at [illegible] your military career. In [illegible]ort, this [illegible] is called career advancement. We will first identify [illegible] Force specialty code, then examine the structure of the Food Service Career Field, and explain the specialty (job) descriptions that describe the duties of food service personnel.

001. Associate the meanings of different parts of the Air Force specialty code with their specific digits and state your AFSC.

Air Force Specialty Code. Each food service specialty is given an AFS title—Food Service Helper, Food Services Specialist, Food Service Supervisor, or Food Service Superintendent—as you can see in figure 1-1. For ease of reporting and assigning airmen, each AFS is given a series of meaningful digits called an Air Force specialty code (AFSC). The following is a breakdown of the AFSC toward which you are training.

62 . . . . . Career field (Food Service)
2 . . . . . Career field subdivision (Cook)
3 . . . . . Skill level (Apprentice)
0 . . . . . Specific AFS

Put together, these digits give us 62230, which is the code for the Apprentice Cook.

Exercises (001):

1. Match each meaning of an Air Force code number in column B with its related code digits in column A, which properly combined add up to AFSC 62230. Each item in column B may be used only once.

Column A	*Column B*
_____(1) 62.	a. Career field.
_____(2) 2.	b. Skill level.
_____(3) 3.	c. Specific AFS.
_____(4) 0.	d. Career field subdivision.

2. When you have satisfactorily completed this CDC, [illegible] will [illegible] AF[illegible]

002. [illegible]te how to advance to a 3 level and distinguish the obtaining of the 3 level for the DDA from the usual way this level is obtained.

Career Field Progression. Note in figure 1-1 that there is only one major area in the Food Service Career Field—the Food Service Specialist. This area is known as a career ladder.

In order to show the advancement of individuals within their profession, the career ladder idea was developed. As each individual increases in knowledge, skill, and ability to assume responsibility, that person progresses to a more advanced skill level. In other words, you cannot start at the top of the ladder, you must start at the bottom and climb.

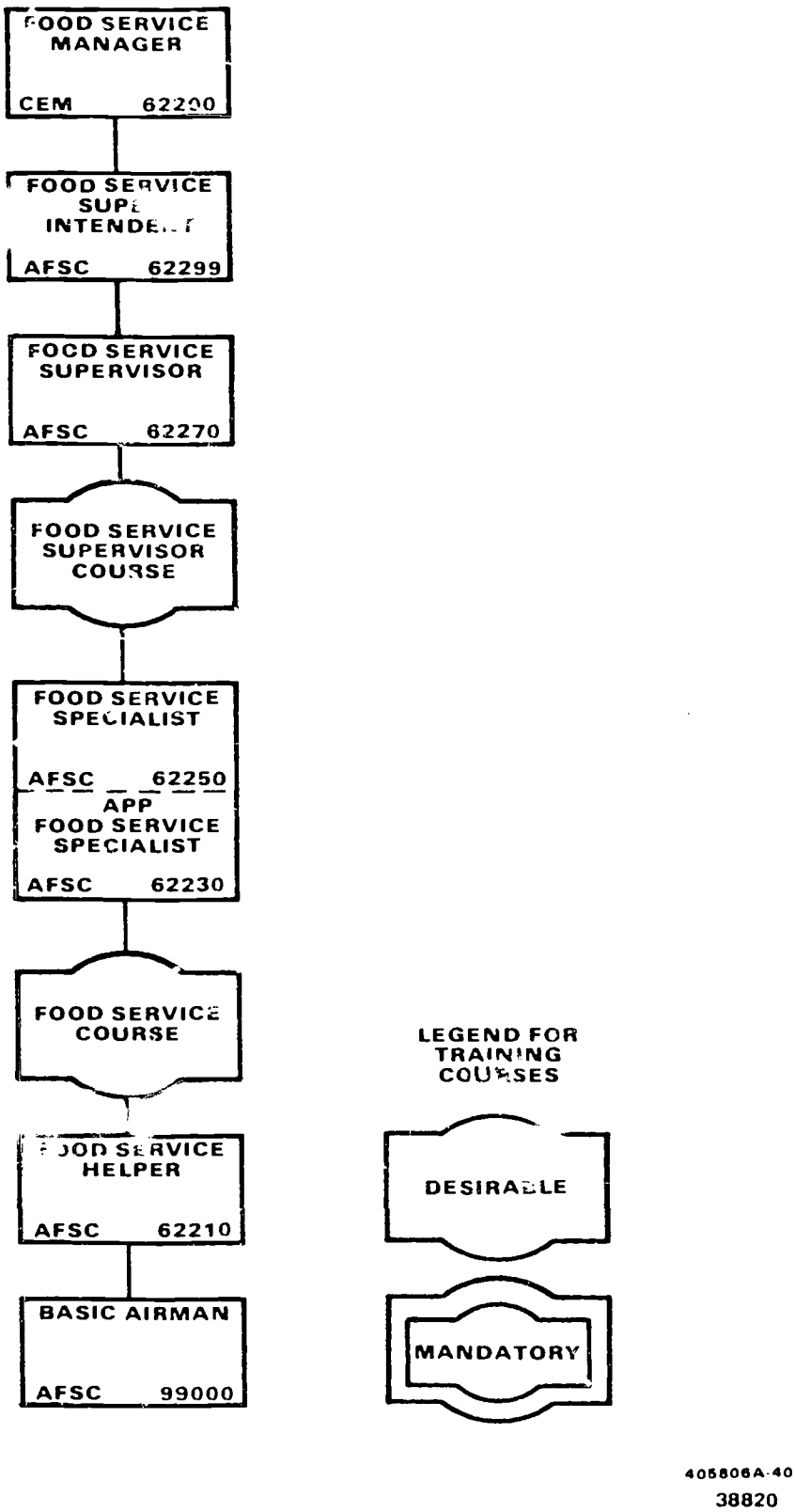

Figure 1-1. Food Service Career Field chart.

Skill levels and promotions are related, as you can see in figure 1-1 by noting the blocks at the left of the corresponding skill levels. All of us are interested and motivated by promotion and additional pay. How do you obtain a 3 skill level? One way is to attend a 9-week technical training course (G3ABR62230 Food Service Specialist Course) at Lowry AFB, Colorado. The other way is to receive a directed duty assignment (DDA) immediately after your basic military training. As a DDA, you are required to complete a career development course (CDC). You do this to gain the technical knowledge necessary to do your job satisfactorily.

Equally important is your on-the-job training (OJT). This is taking the technical knowledge you've gained through your CDCs and putting it to use in the work area. In essence you'll be learning by doing to obtain proficiency in your Air Force specialty.

The award of a 3 level is usually automatic when a person completes any basic technical training course. However, for the DDA to obtain the 3 skill level, it's OJT and completion of CDC 62230.

Exercises (002):

1. What are the two ways in which a 3 skill level is obtained?

2. Give one way for the DDA to obtain the 3 skill level that differs from the usual way in which it is awarded.

003. Identify proficiency statements as 3, 5, or 7 skill level; group various entries on food service personnel extracted from AFR 39–1, and pair them with AFS codes or AFR 39–1 sections on this specialty.

Specialty Description. The duties of food service personnel are spelled out in Air Force specialty (job) descriptions found in AFR 39–1, *Airman Classification Regulation*. Only three specialty descriptions are given in each career ladder—those for specialist, supervisor, and superintendent.

Each AFS description consists of three sections:

(1) Specialty Summary.
(2) Duties and Responsibilities.
(3) Specialty Qualifications.

The specialty summary section gives the overall picture of the specialty. The duties and responsibilities section lists the general duties of a particular AFS. The specialty qualification section contains a statement of education, experience, training, and other qualifications a person must have if that individual is to perform well in the specialty. The following is extracted from AFR 39–1. Study it carefully until you can answer quickly and accurately questions on both the AFS codes and their meanings and the three sections relating to the food service specialist.

A35–7/8
AFSC 62250
Semiskilled AFSC 62230
Helper AFSC 62210

AIRMAN AIR FORCE SPECIALTY
*FOOD SERVICE SPECIALIST

1. SPECIALTY SUMMARY

Prepares, bakes, cooks, and serves food in dining halls, flight kitchens, consolidated preparation facilities, central pastry kitchens, and field kitchens.

2. DUTIES AND RESPONSIBILITIES

a. Prepares, bakes, cooks, and serves food. Prepares fresh, frozen, canned, and dehydrated foods for cooking and serving by following standard, revised or approved created recipes. Cooks food by roasting, frying, broiling, grilling, simmering, boiling, or stewing. Prepares all items that appear on daily menus, such as meat, fish, poultry, cheese and eggs, vegetables, soups, sauces, gravies, salads, salad dressings, relishes, sandwiches, and hot and cold beverages. Prepares a limited range of baked products such as biscuits, rolls, cakes, cookies, pies, puddings, fillings, and icings. Assures timely and adequate preparation of pastry items, desserts, yeast-raised dough products, quick breads, and specialties decorated with icing.

b. Maintains kitchen, bakery, and dining hall utensils and equipment. Maintains and performs first echelon maintenance for all food service utensils and equipment used in dining halls, kitchens, pastry kitchens, bakeries, flight kitchens, alert facilities, and crash and field kitchens. Responsible for the operation of food service equipment such as electric slicer; mixing machines; baking and roasting oven; gas, oil, or electric ranges; gas and electric grills; tilt grill; steam cooker; speed pressure cooker, electric broiler; carbonated and noncarbonated beverage dispensers; milk dispenser; soft ice cream milk shake maker; pie dough divider, and rolling machine; vegetable peeler; doughnut machine; waffle iron; dough proofing cabinet; coffee maker; field range; and im[illegible] water heater.

c. Supervises food service personnel. Assumes direct control of food preparation, assigns work and reviews work performed, assists supervisor in menu planning, assumes supervisor's duties during absence, conducts OJT, and inspects and tastes food during and after preparation for conformance with standards of quality and quantity. Receives and checks all incoming food and ensures proper storage; prepares AF Form 148, Senior Cook's Requisition; receives subsistence items to prepare the meal according to the menu and instructions from the supervisor. Performs duty as monitor of food service contracts.

3. SPECIALTY QUALIFICATIONS

a. Knowledge. Knowledge of recipes; composition and characteristics of ingredients; menu planning; food preparation methods; nutritive content of foods; food storage standards; sanitary standards; pastry decorating techniques; and operation of equipment is mandatory. Possession of mandatory knowledge is determined according to AFR 35–1.

b. Education. Completion of high school with courses in ac[illegible]ing, home economics, and mathematics is desirable.

c. Experience. Experience in functions such as preparing, cooking, baking, and serving food is mandatory.

d. Training. Completion of a baking and cooking course is desirable.

e. O[illegible] A minimum aptitude level of General 40 is mandatory.

The airman who is awarded a 3-level AFS is expected to know a limited amount about the job. With different amounts of supervision, this airman is expected to be able to perform many of the tasks involved.

At the 5 level, the airman is expected to be skilled in the performance of most of the tasks involved. This airman's responsibilities as a 5 level are also increased.

When you finally get the 7-level AFS (supervisor), you are expected to know and be skilled in the total job. Then

you must be able to assign, train, and direct those that work for you. You also handle many administrative tasks associated with the position.

Bear in mind that as a food service member, your general health and appearance are not merely a personal matter. They are of the utmost concern to the people with whom you work and to those personnel who also handle many administrative tasks associated with the position.

The next rung of the ladder is the superintendent position, while the position of Chief Enlisted Manager (CEM 62200) fills the top position of the career field.

Exercises (003):

1. Which regulation describes the food service personnel duties and responsibilities?

2. Which awarded AFSC level is an airman expected to know a limited amount about the job?

3. At what skill level are you expected to know and be skilled in the total job?

4. Match each entry concerning food service personnel skill-level AFS codes, duties/responsibilities, qualifications, or specialty data found in column B with its corresponding AFS code meaning or section of AFR 39–1 related to this specialty field, given in column A. Each item in column B may be used once, more than once, or not at all.

Column A	*Column B*
_____ (1) Helper (AFS code meaning).	a. Maintains kitchen, bakery, and dining hall utensils and equipment.
_____ (2) Section 1, Specialty Summary.	b. 62230.
_____ (3) Section 2, Duties and Responsibilities	c. Supervises food service personnel and assists supervisor in menu planning.
_____ (4) Section 3, Specialty Qualifications.	d. 62210.
_____ (5) Semiskilled (AFS code meaning).	e. Prepares, bakes, cooks, and serves food in dining halls, flight kitchens, consolidated preparation facilities, central pastry kitchens, and field kitchens.
	f. 62250.
	g. Possession of mandatory knowledge determinee according to AFR 35–1.

1-2. Food Service Organization

Like any company the Air Force has organizational structure. A chain of command that shows the rank structure and lines of authority and responsibility. Each organization within the Air Force is structured in the same manner. Let's look at the basic food service organization and its responsibilities.

004. State the reason for an organization structure within Food Service.

As a new airman joining the Food Service Organization one of the first things you'll observe is an organizational chart hanging on the wall in the food service staff office. See figure 1-2. Whether you know it or not this chart gives the nuts and bolts of the overall food service operation. It is a blueprint or game plan for the operation of food services activities. This chart not only shows individual authority but also personal responsibility as well. Once assigned to a particular area in the operation, you can see what part you play in the overall food service mission. If you interrelate this chart with figure 1-1 in the previous lesson on career fields you can see how career progression fits into the overall food service mission.

As you can see the food service organizational chart is set up as chain of command which shows individual responsibility and authority. In CDC 62250 a more indepth look at the food service structure is conducted.

Exercises (004):

1. What does an organizational chart show?

2. Once you've assigned to a particular area what does the organizational structure show you?

005. State the basic responsibilities of the food service organization.

The mission of Air Force Food Service is to provide the highest possible standards of food preparation and service to authorized personnel within the Air Force. You play an important role in ensuring this is carried out. In addition, Food Service is also tasked with providing a trained task force of personnel who can respond to wartime taskings and contingency operations worldwide. With the importance of good nutrious meals to promote health, morale, and welfare, Food Service in the USAF mission cannot be over stressed.

TYPICAL BASE SERVICE ORGANIZATION

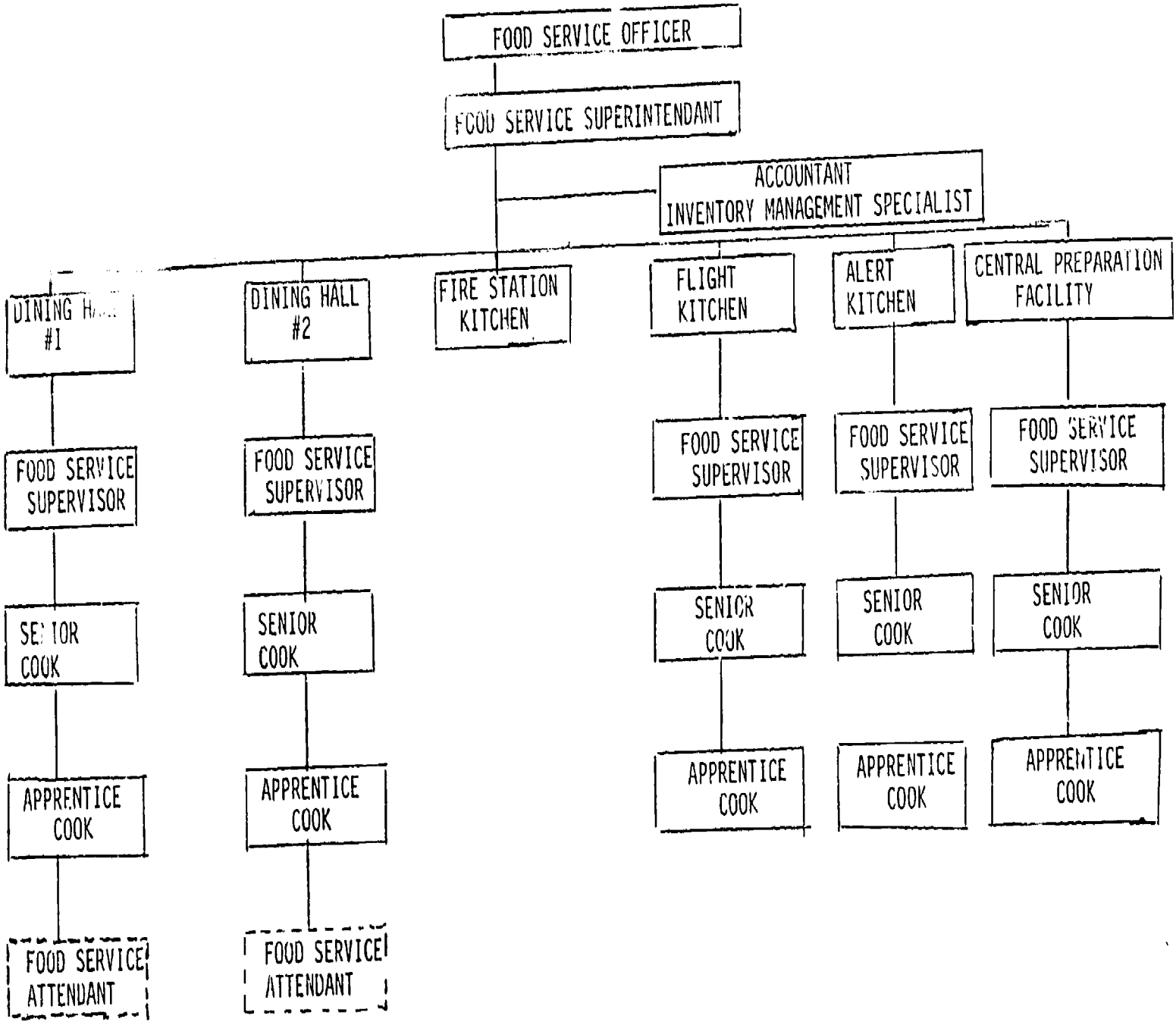

not applicable if attendant function is contracted.

Figure 1-2. Typical food service organizational chart.

Exercises (005):

1. What is the mission of Air Force Food Service?

2. What is the mission of Air Force Food Service?

3. What is an additional responsibility food service tasked with?

14

Food Service Sanitation

SANITATION is the science and practice of effecting healthful and clean conditions. However, your supervisor probably refers to sanitation as simply a matter of reaching and maintaining a state of cleanliness. You will soon discover that sanitation is more than a measure, procedure, or condition. It is a way of life.

It will not take you long to realize how your supervisor feels about sanitation. You may believe that thorough and constant cleaning operations represent an unreasonable decision on the part of your supervisor. That is not so: your supervisor knows the sanitation standards and is required to protect the health and welfare of all persons.

This chapter introduces the subject of sanitation as it pertains to food service. We will discuss the importance of personal hygiene, communicable diseases, and control measures to combat these diseases. We will also discuss some of the common cleaning problems, precautions, materials, and procedures. Each facility has its own peculiar problems of sanitation and it is impossible to anticipate them all.

Therefore, if you find a need for more information than is contained in this chapter, check with your trainer or supervisor.

2-1. Food Service Standards

From your own experiences, you must agree that a clean, wholesome atmosphere and environment are necessary to a successful food service operation. Even if we were to discount entirely the harmful effects upon health that a lack of sanitation creates, we would still be faced with the fact that no one enjoys food prepared and served in unclean surroundings. The fresh, distinctive flavor of food simply cannot be maintained unless the food is handled and prepared according to high standards of sanitation.

006. Identify the regulation that establishes sanitation standards and the personnel who assist food service personnel on matters relating to sanitation.

Sanitation Standards. Nowhere is the applying of established rules and standards of sanitation more important than in our food service activities. Because of its importance, both to health and morale, sanitation is governed by regulations and is measured against definite standards. Each Air Force commander is responsible for enforcing these regulations. Medical service personnel supervise the various activites in matters of sanitation, and they advise the commander as to the effectiveness of the sanitation procedures employed and of problems that may exist. Food service personnel work closely with medical service personnel on matters relating to sanitation. Each section supervisor should actively seek the advice and recommendations of qualified medical personnel. With the commander's approval, the food service supervisor carries out the practices and procedures set down by the medical department personnel who provide for the health and welfare of those who use the facility.

While Air Force regulations place certain responsibilities for sanitation upon certain offices and persons, the fact remains that sanitation in a dining facility is the responsibility of everyone. To the people with whom we have contact, we have an obligation to devote proper attention to cleanliness and hygiene, both as they pertain to our person as well as to our work areas and quarters. Any one person who neglects responsibility for sanitation can endanger the health and the lives of airmen who depend upon food service personnel for providing wholesome food served in clean, healthful surroundings.

The authority for establishing sanitation standards in Air Force food service facilities, as well as the responsibility for their enforcement, is outlined in AFR 161–26 *Control of Foodborne Illness*. A copy of this regulation should be on file in all food service activities. You will find the information provided by this regulation to be helpful as a source of reference when sanitation problems are encountered.

Exercises (006):

1. With whom must food service personnel work closely on matters relating to sanitation?

2. Who is responsible for sanitation in a dining facility?

3. Which AF regulation is the authority for establishing the sanitation standards for all food service activities?

2-2. Personal Hygiene

Sanitation, like charity, begins at home. There is no place in the food service organization for a person having a casual attitude toward personal cleanliness.

007. Cite the attitude and the proper precautions necessary for food service workers to protect their health and the health of others.

Personal Hygiene and Food Service Personnel. Personal hygiene is of special importance to food service personnel. Not just our own health but also that of everyone for whom we prepare or serve food depends heavily on the personal hygiene we practice. Where does our personal hygiene begin? It begins with a "soap and water" attitude. By this we mean that every person directly involved in any food-handling operation is expected to use soap and water. Food service people should use it generously in keeping themselves clean as they would in keeping their own eating utensils clean. For us, one shower daily is considered a minimum requirement; at times, two or more may be needed.

Our skins are naturally covered with staphylococci bacteria, and they are a major source of food poisoning. If, through lack of proper attention, these bacteria are permitted to multiply, a point may be reached at which there is a serious danger of contamination of food that is handled. The best protection against such multiplication is soap and water. The hands, particularly, should be washed frequently. They should be washed immediately before going on duty, after every visit to the latrine, after using a handkerchief, and after each contact with anything that might constitute a source of germs. Each washing of hands must include plenty of soap—simply running water over the hands is not enough.

It is well to note that sanitation and hygiene involve both physical and mental factors. Food service personnel not only must be clean—they must look clean. If you have ever eaten a meal in a "greasy spoon" restaurant, you are doubly appreciative of the need for a clean, neat appearance presented by cooks and Food Service. There is nothing worse than the sight of a soiled apron to dull the appetite.

A person who takes pride in a profession also takes pride in appearance and makes sure that personal habits and mannerisms are socially acceptable.

A Personal Hygiene Checklist for Food Service Personnel. A pilot making ready for takeoff follows a definite checklist to ensure that the aircraft is in all respects prepared for flight. Similarly, food service personnel do well to honor a personal hygiene checklist when preparing for their duties and responsibilities. The following personal hygiene rules are presented as such a checklist:

(1) Keep your fingernails short and clean. A nail brush should be available at each sink in latrines. Dirty fingernails not only detract from your sanitary appearance but also carry collected germs that can be passed on to the food you prepare or serve.

(2) Bathe daily, especially before reporting for duty. Foul body odor does not improve appetizing food aromas.

(3) Change your socks and undergarments daily. Perspiration-soaked socks and garments give off an offensive odor.

(4) Brush your teeth a minimum of twice daily. Unbrushed teeth lead to stains, and cavities, both of which have a tendency to injure your health. This unclean condition also leads to bad breath.

(5) Visit your barber or hairdresser. At regular intervals visit your barber or hairdresser and have your hair cut to the required military standards.

(6) Shampoo your hair at frequent intervals. A person with dandruff or other scalp disorders does not present a pleasing appearance and may cause food to become contaminated.

(7) If male, have a good, close, clean shave before reporting for duty. This is a standard prerequisite.

(8) To prevent hair from falling into food during preparation, inspection, or serving, wear a clean white hat if male and wear a hairnet if female.

(9) All personnel should report for duty in freshly laundered white uniforms. That is, garments that cover the armpits.

(10) Keep all of your shoes polished and in good repair. Polished shoes add to your personal appearance. Have two pairs of work shoes and wear them alternately. This prolongs the life of your shoes and reduces the possibility of bad odor or possible foot ailments.

(11) To prevent spreading of respiratory germs. Check all coughs and sneezes with a handkerchief or, more preferably, with a disposable tissue. When coughing and sneezing spells are persistent, you should report to sick call for prompt medical attention.

(12) During the performance of duty, your face is the largest area of your body exposed and accessible to the collection of germs. Therefore, do not touch your face or mouth with your hands while you are handling food.

(13) Do not smoke in areas where food is being prepared or served. Tobacco ashes may fall into food, and tobacco odors taint the appetizing aromas of food.

(14) When possible, keep your hands from making direct contact with food. Use forks, spoons, or tongs when preparing or serving food.

(15) When sampling foods during preparation for palatability and flavor. Use a clean fork, spoon, or other suitable utensil for each sampling.

(16) Handle cups, glasses, plates, and other containers used in the consumption or preparation of food by the outside areas or edges only. Touching the interior of these receptacles with the fingers produces smudges and gives these items a soiled appearance. Furthermore, it is an unsanitary practice that increases the possibility of spreading germs among food consumers.

(17) Remove all wrist watches and rings (except wedding rings) before and during food preparation and serving.

(18) Get prompt medical attention for all cuts and scratches. Anything more than a superficial cut or scratch should be treated by qualified medical personnel.

Bear in mind that as a food service member, your general health and appearance are not merely a personal matter. They are of the utmost concern to the people with whom

you work and to those personnel who eat the foods you prepare.

Exercises (007):

1. With what kind of attitude should personal hygiene begin?

2. What two factors do sanitation and hygiene involve?

3. List 10 of the personal hygiene rules that pertain to food service personnel.

4. What bacteria is the major cause of food poisoning?

5. Touching the interior of cups, glasses, plates, and other containers increases the possibility of what occuring?

6. Why should you alternate wearing two pair of work shoes as an apprentice food service specialist?

7. Who should treat any cut that is more than superficial?

2-3. Communicable Diseases and Disease Control Measures

There are diseases that may be spread from person to person and from animals to humans, either through direct contact or through close association. These diseases are known as communicable diseases; that is, diseases given or transferred by one person to another.

One of the most important responsibilities in food service operations is preventing the spread of disease. As a matter of fact, this responsibility is the primary purpose of the entire sanitation program and, in this connection, your own good health is of vital importance.

008. List common types of communicable diseases, describe each briefly, and list the links in the chain spreading communicable diseases.

Types of Communicable Diseases. Three common types of communicable diseases exist against which you must be constantly on guard; respiratory, intestinal, and insect-borne. Of these, respiratory diseases are those that relate to the lungs and air passages. The spreading of such diseases is usually a result of discharges from the nose, mouth, throat, or lungs. Common colds, scarlet fever, and tuberculosis are examples of respiratory diseases that are communicable from one person to another.

Intestinal diseases are those that affect the digestive tract or system. Examples are typhoid fever and dysentery. Such diseases are spread by infected food handlers, flies, and other insects, rodents, and by otherwise contaminated food and water supplies.

Insect-borne diseases are usually considered to be those which are transmitted by bloodsucking insects. An example is malaria, which is spread by the mosquito.

There are three links in the chain for the spread of communicable diseases: (1) the source, (2) the means of transmission, and (3) the susceptible person. Control measures may be directed against all three. This involves isolation, physical inspection, and quarantine. For certain reasons, some diseases may require inoculation.

Exercises (008):

1. What are the three common types of communicable diseases?

2. Which diseases relate to the lungs and air passages?

3. Which diseases affect the digestive track or system?

4. Which diseases are usually considered to be those which are transmitted by bloodsucking insects?

5. Give in list form the links in the chain spreading communicable diseases.

009. State the measures and inspections used in food service establishments for controlling disease and name the areas periodically inspected by the medical food inspector.

Good health depends upon many factors, most of which are controllable to some degree. Proper rest, plenty of sleep, regular hours, good eating habits, and proper exercise are all necessary to a healthy body and an alert mind.

In this segment we will look at the supervisor's inspection, the physical examination, and the medical services inspection.

Supervisor's Inspection. The supervisor's inspection, conducted at the beginning of each shift, involves both permanent and temporary food handlers. Permanent food handlers include all personnel, military and civilian, who are permanently assigned to duties involving the handling, processing, preparing, or serving of food. Included are cooks, cooks' helpers, bakers, and food service supervisors. You might go a step further and say that this group also includes all persons who handle or serve food or beverages of any kind (other than in unbroken packages). This group also includes those who handle equipment or utensils necessary for preparing and serving food as part of their regular routine.

The temporary food handler group includes those persons who are assigned duties in food service activities for relatively short periods of time, and whose duties do not involve the handling of prepared food or food items to be served after cooking. Any person whose state of health is not up to par should not be permitted to work. If you have a cold, a sore throat, a persistent cough, or any other form of illness, you should not be permitted to work; because you can spread disease through contaminating the food you handle. You should not be handling food if you have skin diseases or disorders or a cut or sore of other than a superficial nature. You should not wait; however, for your supervisor to find you unfit for duty. If you are ill or are suffering from any injury or any kind of disorder, report that fact promptly to your supervisor. Normally, you are instructed to report immediately to the hospital.

Food service personnel, like other nonmedically trained personnel, are prohibited from the self-treatment of wounds or diseases because medical treatment, regardless of the extent or nature, is strictly a job for the medics. In addition to reporting for sick call, you are also expected to report promptly for the appropriate treatment of cuts, burns, strains, and other injuries. You are never to handle food unless your physical condition is up to par or, in the case of minor ailments, unless your continued presence and activity in the food service establishment are approved by competent authorities.

Physical Examination. In addition to the supervisor's inspection, all permanent food handlers must have a complete physical examination before beginning duties involving the handling and processing of food and food service equipment. Since you are classed as a permanent food handler, you are issued a medical certificate that is posted or kept on file in the facility where you work. Physical examinations are required periodically thereafter.

Officers or supervisors in charge of food service facilities are required to make written reports to the medical food inspector naming all permanent food handlers under their control. The medical food inspector takes the necessary steps to have the personnel examined and to keep a permanent record of the findings. Results of the examination are promptly reported to the organization commander, and persons found unfit for duty are relieved at once.

Medical Services Inspections. In addition to your initial food handler's examination and the usual daily inspections, your section is inspected periodically by a member of the Medical Food Inspection Services. This unannounced inspection usually takes place during meal preparation, meal serving, dishwashing, or the performing of other sanitation duties. The inspector observes personal appearance of personnel; techniques used in food preparation; area and equipment cleanliness; handwashing facilities; and the temperatures of foods being served, of wash and rinse waters in dishwashing machines, and in ice boxes and freezers, etc. The inspection can also include taking unannounced finger cultures of personnel on duty and swab cultures of plates, cups, glasses, eating, and of serving utensils and vessels used in preparing and serving food.

Exercises (009):

1. What are the three inspection measures used to control diseases?

2. What two types of inspections are conducted before a worker can perform duty in a food service establishment?

3. List 3 areas in your section which the medical food inspector periodically inspects?

2-4. Cleaning Agents and Sanitation Measures

Good sanitation is nothing more than good housekeeping, and good housekeeping is little more than the application of common sense.

In the Air Force, everyone has certain housekeeping responsibilities. Each individual is required to maintain certain standards of order and cleanliness in living quarters and to observe certain proprieties in conduct. If this were

not true, a number of health hazards would develop and would lower the efficiency of the Air Force.

010. Cite the categories of dirt and the classes of cleaning agents; state the cleaning agents used to remove dirt and the different ways stain is removed.

Use of Cleaning Agents. The aim of any cleaning operation is the removal of dirt. In terms of cleaning operations, dirt falls into three categories (1) dirt that is soluble in water, (2) dirt that is insoluble in water, and (3) dirt that produces a stain.

Dirt that is soluble in water requires only water for its removal. Water alone is ineffective against germs unless it is boiling hot.

Dirt that is insoluble in water can be washed away only by using a solvent or an emulsifying agent, something that suspends the dirt in water. Soap in a solution is a combination of both; so it is the most widely used cleaning agent. Soap extends the dissolving action of water and is the best-known agent for suspending grease and dust in water. However, detergents are also popular as cleaning agents and can effectively take the place of soap.

A stain is caused by dirt that, if not removed immediately, changes the color of the surface upon which it exists. Therefore, give prompt attention to the removal of stains in order to prevent permanent damage to the surface affected.

Cleaning agents commonly used in food service operations may be divided into two general classes: (1) those emulsifying dirt with water and (2) those removing dirt by abrasive action.

Soap is an agent that cleans as a result of an alkali action upon fats or oils. It is usually made up of fats or oils combined with alkali of sodium and has an excess of free alkali. The milder toilet and hand soaps are usually made with palm, coconut, or cottonseed oils combined with either a sodium or potassium-type alkali. Liquid soap is similar to bar soap, except that it is in a solution with water.

Detergents are cleansing or purging agents resembling soap in their ability to emulsify oils and to hold dirt in suspension. Detergents have, to a large degree, replaced soaps for the various cleaning operations in a food service establishment. The standard detergent for Air Force cleaning processes is known as all-purpose synthetic detergent cleaning compound. The standard detergent may be in powder, flake, liquid, or paste form. It contains no abrasives or fatty acid soap and is not irritating to the skin.

An alkali is a substance, such as potassium or sodium carbonate, having a characteristic acrid taste and the ability to neutralize acids. As you have already learned, alkalis are essential ingredients in soap, but there are many cleaning operations in which alkalis alone are used. They have cleaning power beyond that of soap and are less expensive. The most objectionable feature of an alkali is its caustic action; that is, a tendency to irritate and burn the skin. Alkalis do not produce suds, but they do soften the material that binds dirt to a surface.

Thorough rinsing is particularly important when the cleaning process has involved the use of alkali. This is important because surfaces that are not properly rinsed continue to be affected by the caustic action of the alkali, and damage may result. In general, alkalis should not be used on wood, linoleum, asphalt or rubber tile, or painted surfaces.

Some of the alkali cleaners in common use include trisodium phosphate, sodium bicarbonate, and borax.

An abrasive is a substance that, when rubbed on a surface, wears the surface away. An abrasive cleaner, therefore, is one that cleans by wearing away the dirt and, in the process, a part of surface to which the dirt had clung. If all cleaning is done regularly and properly, there is little need in a food service establishment for abrasives.

Stains may be removed in three different ways: (1) by dissolving the substance causing the stain, (2) by using a bleaching agent, and (3) by absorbing the substance causing the stain. You may sometimes be faced with special stain problems, such as the removal of water stains that appear on washbowls, urinals, and toilet bowls. Such stains may normally be prevented through the use of thorough daily cleanings with detergents. However, when stains do occur and normal detergent action proves inadequate, the use of a damp cloth and a soap-grit cake or scouring powder ordinarily removes them.

For stain removal, never use any solution that has not been approved by your supervisor. There are some solutions that remove stains, but they also cause serious and permanent damage to the surface. Therefore, it is far better to leave the stains than to remove them at the expense of removing the surface as well.

Cleaning agents tend to attack surfaces as well as the dirt or grime that may appear on those surfaces. For that reason, it is always well to consider that surfaces to be cleaned may be damaged in the cleaning process. Usually, there is a preferred cleaning agent and cleaning process for every cleaning operation, and you only have to match your surface to be cleaned with the preferred agent and process for that surface.

In food service operations, we must be doubly alert to the need for good housekeeping. Housekeeping might, indeed, be called our watchword. Although adequate measures of sanitation are important to every facet of Air Force life, they are imperative when they relate to food.

Exercises (010):

1. List three categories of dirt.

2. How is dirt that is soluble in water removed?

3. How can dirt that is insoluble in water be washed away?

4. What are the two classes of cleaning agents?

5. What are the different ways to remove stains?

6. What is the reason for always considering carefully the surfaces to be cleaned before you choose or use a cleaning agent? Explain what is involved.

011. State the purpose of properly cleaning floors and supply the methods of mopping and buffing; state the means for removing water from windowpanes.

Floor Care. Floors in a food service establishment are subject to hard use, and you must clean them often and thoroughly. Proper cleaning serves a threefold purpose; it provides the necessary sanitation; it protects the floor against undue damage and wear caused by abrasive dirt; and it adds to the attractiveness of the facility.

Sweeping. Remove dirt from floors by sweeping them with a dampened broom or by using a dry or treated mop. Your supervisor indicates which type of sweeping tool is best suited for the floor in your facility.

Mopping. Mopping removes dirt that has stuck to the floor surface and cannot be removed by sweeping. The two methods of mopping are wet and damp mopping.

Do wet mopping by spreading the soap or detergent solution and thus loosening and dissolving the dirt and grease clinging to the floor. Then use the mop to pick up the washing solution and the loosened dirt. Follow this with a rinse mopping to remove any of the remaining solution.

Do damp mopping with a mop that has been dipped into a clear water solution and then wrung out. Damp mopping is especially useful in the kitchen, where the use of a broom is prohibited because a broom raises dust, thereby contaminating the food. By damp mopping you remove the dust without spreading it around.

Waxing. Water emulsion wax is the most common type of wax used in the dining hall. You may apply it with either a lamb's-wool applicator or a clean mop. If you use the mop, make sure it is free of soap or dirt.

When applying the wax, evenly coat one small area at a time. Once you have started applying the wax in one direction, continue in the same direction. Do not rub the floor surface with the applicator after applying the wax.

Buffing. Wax should be thoroughly dry before buffing. You do the task of buffing with a disk-type buffing machine or a cylinder-type machine with a tampico brush. You can place a lamb's-wool pad or a piece of blanket under the buffer to give a higher luster or to remove brush marks.

Window Care. Few things detract more from the appearance of a food service establishment than dirty windows. How often the windows require cleaning depends on many factors. The season, the local terrain, the extent to which the air is filled with smoke, the local climatic conditions, the local method of heating—all of these have a bearing upon the situation. You might say that a thorough cleaning of all windows on a once-per-month basis represents an average or typical requirement. In short, if the windows look dirty, clean them.

For normal window cleaning, all you usually need is clear water. Use the water sparingly and change it frequently. You can remove water from the windowpanes with a chamois, a rubber squeegee, or a clean, lint-free cloth. For hard-to-clean windows, use a solution recommended by your supervisor or trainer.

Remember that maintaining a high standard of sanitation in food service facilities involves close attention to a great many details. It also involves the complete cooperation of all personnel assigned to the facility.

Exercises (011):

1. Name the threefold purpose served by the proper cleaning of floors.

2. What are the two methods of mopping?

3. How is buffing done?

4. State three means by which water can be removed from windowpanes.

012. Give the proper temperature for an automatic dishwashing machine and a three-compartment sink.

Dishwashing. Proper dishwashing is one of the most important procedures in any dining facility. Nothing can ruin a well-balanced, eye-appealing meal faster than to see breakfast egg still sticking to your plate. This could be an oversight, but normally it is just plain negligence on the part of the people doing the dishwashing. At times they just get in too big a hurry to finish their work. You should pay special attention to dishes and silverware before placing them in the automatic dishwasher. Scrape or remove all food particle from utensils and dishes before placing them in the washer. Before putting anything in the dishwasher, you must be sure it is operating at the proper temperature. These temperatures are 140 to 160° in the wash cycle and a minimum of 170° in the final rinse.

Final rinse temperatures are selected so the time-temperature "pasturize" surfaces of these items that are sanitized. A water temperature of 180°F (82.2°C) measured

in the pipe (as by an installed in-line thermometer) means the water is at least 170°F (76.6°C) on the surface of the item it sanitizes.

Operating a dishwasher below these required temperatures could be dangerous and, as a result, eating utensils would not be properly cleaned and sanitized. Also, you should change the water in a dishwasher that has been used for one continuous hour. Another effective step is to inspect dishes and utensils as you remove them from the dishwashing machine. This practice ensures you that things are clean and saves time. Chances are good that your shift leader, dining hall supervisor, or the base medical food inspector may inspect your work before the next meal. If any of these find numerous items unsanitary, you may be required to rewash all dishes and silverware from the previous meal. So play it safe. Do as we advise. Also, if, while checking utensils as you remove them from the machine, you find any are not clean, look for the following: (1) You may not have used enough dishwashing compound. (2) The water temparture may be inadequate. (3) The water may need to be changed. (4) Some of your equipment may be faulty. If, after checking out these possibilities, you still have problems, call your supervisor.

For larger equipment, such as pots and pans, you normally use a three-compartment sink. The first sink should contain hot soapy water from 120° to 130°F. The second sink should contain hot rinse water from 140° to 150°F. The third sink should contain rinse water maintained at a minimum of 170°F for sanitizing. If you cannot maintain proper temperature in the final rinse, submerse the pans for at least 1 minute in a chlorine solution. However, check with your supervisor before doing this in order to get the proper mixture of chlorine to water.

You should clean all utensils and equipment used for mixing, freezing, or storing dairy products like other food service equipment, but you must rinse them in cold water first.

Exercises (012):

1. What are the proper temperatures in each following cycle of a dishwashing machine?
   a. Wash cycle?
   b. Final rinse?
2. Provide the proper temperatures for each compartment of a three-component sink as follows:
   a. First sink.
   b. Second sink.
   c. Third sink.

013. Cite the procedures to follow when cleaning floors, equipment, toilet facilities, and dressing rooms and lockers.

Floors. You should keep the floors in a kitchen clean by damp mopping them and then scrubbing or mopping them with hot, soapy water or other cleaning agents, depending upon the condition of the floor. If these floors become excessively greasy or dirty, scrub them. Usually, under normal conditions, you can mop them clean. Whatever procedures you use to clean the floor, it must always be dried completely for sanitary and safety reasons. Any time grease is spilled on the floor, you must clean it up immediately.

Equipment. Clean all tables, coffee urns, griddles, deep-fat fryers, and steam-jacketed kettles after each use. You must clean other equipment frequently to prevent an accumulation of dust and grease. If anything boils over in an oven or range, clean it up immediately. Be sure that you wash and sanitize all food-contact equipment and utensils, such as meat grinders, knives, meat slicers, can openers, and pots and pans immediately after using them to avoid the growth of bacteria. Use wipe cloths to clean such areas as counters and tables. These cloths must be clean and odor-free and used for no other purpose. Be sure to rinse wipe cloths between uses in a pan of properly diluted sanitizing solution.

Toilet Facilities. Adequate and commonly located toilet facilities must be provided for all food handler personnel. The toilets and urinals in these facilities should be designed to be cleaned easily. These rooms must not open directly into areas where dishes or utensils are stored or where dishes and utensils are washed. Check that the doors to all toilet facilities are self-closing. Also, make sure a conspicious sign in the native language of each food handler is posted—a sign directing all personnel to wash their hands with soap and water.

Dressing Rooms and Lockers. Adequate facilities must be provided for the orderly storage of clothing and personal belongings. In facilities where food handlers routinely change clothes, adequate locker space should be provided. This area may be part of the toilet facility but may not be located within any food handling area.

Exercises (013):

1. Under normal conditions, how should floors be cleaned?
2. What must be cleaned up immediately any time it is spilled on the floor?

3. What rooms must not open directly into areas where dishes or utensils are stored or where dishes or utensils are washed?

4. Identify the area which may be a part of the toilet facility but may not be located within any food handling area.

2-5 Insect and Rodent Control

Another important factor in sanitation is the positive control of insects and rodents. No single measure completely controls the problems associated with the insects and rodents that infest food establishements. However, when you analyze all the elements of an insect and rodent control program, you find that this program is composed of two phases. The first phase includes the elimination of the breeding places, proper storage of refuse and garbage, and the installation of screens to prevent the entry of pests into the food service facility. The second phase involves the use of chemicals or pesticides to control the pests that already infest the building or surrounding areas.

014. Name the most common types of insects found in food service facilities, name the measures used to control these pests; and specify the knowledge needed for an effective rodent control program.

The common types of insects found in food establishments are the common housefly and the cockroach. Of course, other insects that cause problems include several types of mites, beetles, bugs, and moths. These insects seldom cause disease, but they do cause the food products to be filthy and unwholesome. The following paragraph deals with only the two most common types.

Flies. The fly is one of the most common of all food infecting insects, and it is one of the filthiest. Because a fly is bred in filth and lives in filth, you can reduce the fly population by eliminating the filth. When a fly travels from filth to food, it carries in its stomach and on its feet millions of bacteria that are subsequently deposited on the food.

More exactly, you can control flies through proper sanitation by eliminating their breeding areas, by proper screening of windows and doors, and by the use of chemicals to kill both adults and larvae (maggots). This elimination of all unnecessary sources of attraction for flies is essential in fly-control programs; therefore all food service personnel must give special attention to the following control procedures.

To eliminate the breeding places of flies, you must cover, dispose of, or treat promptly and effectively all human waste, animal manure, and garbage. In any fly control program, your strict observance of the following procedures is most important:

- Have garbage picked up at least once a day.
- Keep garbage cans clean and covered with tightly fitting lids.
- Keep ground area around garbage racks free of refuse.
- Clean exterior and interior grease traps regularly.
- Protect foods by screening or refrigeration.
- Clean latrines daily.
- Screen all windows and doors.

Roaches. The roach is another creature that may thrive in food service installations if a continuous control program is not in effect. These insects secrete a foul liquid from their scent glands, an obnoxious saliva from their mouths, and leave a mucous-covered excreta behind in their travels.

Roaches thrive in the presence of food, warmth, and sheltered locations. They are most active at night, usually remaining concealed in cracks or other hiding places during the day. Their favorite breeding places are under steamtables, sinks, drains, and storeroom shelving. In their search for food, they contaminate exposed food, dining and worktables, utensils, and food preparation equipment. Food service personnel can and must control roaches. However, this task is not easily done. Only by practicing a continuous control program produces the results you desire—the elimination of all roaches.

To control roaches, fill all cracks and crevices, eliminate all likely breeding places, keep food covered, and watch food deliveries so that roaches are not brought in.

Rodents. Such rodents as rats, mice, and ground squirrels not only act as reservoirs of disease but also destroy large amounts of Air Force food suppies. They damage buildings and equipment, and they cause fire loses by gnawing the insulation coverings of electrical connections. A few of the rodent-borne diseases are endemic typhus, bubonic plague, trichinosis, infectious jaundice, and various intestinal diseases. To have an effective rodent control program, you need to know the species to be controlled. When you notice evidence of rodent infestation, report it so your supervisor can contact Civil Engineers Entomology. This base activity formulates an effective rodent control program and, by following their advise, you can soon eliminate any rodent problem. Actually, the control of rodents, like the control of insects, begins with good housekeeping.

Exercises (014):

1. What are the two most common types of insects found in food service facilities?

2. Name four ways to control flies.

3. Name at least three parts of a program to control roaches.

4. What do you need to know to have an effective rodent control program?

CHAPTER 3

Principles of Food Preparation and Service

THE EFFICIENCY of any military organization depends largely on the strength, vigor, and alertness of its personnel. It is a recognized fact that diet has an all-important influence on physical condition and mental attitude. Wholesome nutritious food in the proper amounts contributes significantly to a healthy body and a healthy mind. This section gives you the background knowledge needed to prepare nutritious meals for the men and women of the Air Force.

3-1. Elements of Nutrition

Nutrition is the science of providing the body with the proper food in the proper amounts to maintain health and to prevent disease. If a person does not receive the proper foods in the proper amounts, efficiency is reduced and it is more difficult to recover from wounds and illness. Also, the person becomes more prone to becoming ill. The proper amount means that one receives neither too little nor too much. For example, an oversupply of fat in a diet can cause obesity or hardening of the arteries; and undersupply can cause mental dullness or recurring hunger. Obesity can also be caused when the body receives more carbohydrates than it needs for energy. On the other hand, if the body does not receive a sufficient amount of carbohydrates to supply it with the energy it needs, the person loses weight. A man or woman whose diet does not include enough proteins is in poor physical condition and mental reactions are slow. A lack of calcium and vitamin D in the diet causes tooth decay and weak bones; lack of phosphorus causes bones to be brittle. A lack of calcium and vitamin K may make the blood of a person who has been injured slow to coagulate (thicken). Wounds are less likely to heal when there is a lack of vitamin C. Too little in the diet can cause anemia. A person who does not get enough vitamin A may have night blindness or a person who does not receive enough vitamin B may experience blurred vision. These are only a few examples of the effects of poor nutrition.

015. Distinguish between the body's uses and sources of carbohydrates, fats, and proteins.

Carbohydrates. Carbohydrates are present in foods which are made up of carbon, hydrogen, and oxygen. They are mainly sugars and starches. Carbohydrates fall into the heat- and energy-producing food group and constitute the body's chief source of energy. The body uses or burns energy foods, not on the basis of the amount eaten, but on the demands of the muscles. If energy foods are eaten in excess, the surplus is stored in the body as fat. As we all know, too great a storage of fat handicaps normal activity.

There is no hard and fast rule governing the amount of carbohydrates the body requires. An individual's energy requirement varies widely depending on body size, physical activity, age, and climatic condition. During the digestive process, both sugars and starches are converted into glucose (simple sugar) and are absorbed into the bloodstream in this form.

Excessive consumption of carbohydrates not only produces fat but also lessons the desire for foods containing other essential nutrients, such as vitamins and minerals.

The heat- or energy-producing value of food is expressed in terms of calories. The calorie is a heat unit. When we say a certain quantity of a given food contains 100 calories, we are saying in effect that the food, when its nutrients are released to the body tissue, enables the body to exert an amount of energy corresponding to 100 calories.

Carbohydrates are found in abundance in sugar products such as table sugar, syrups, honey, and molasses. Carbohydrates are also found in starches which include products from grains and starchy vegetables, such as potatoes and root vegetables.

Proteins. Proteins are present in all plants and animals. They are an indispensable part of every living cell in our bodies. Proteins are classified as the building material of the body. Its nitrogen content is essential to the repair and maintenance of every living body cell. The human body is approximately 18 percent protein. The hair, skin, nails, and muscle tissues are almost entirely protein.

Proteins are broken down by digestive processes into simpler substances called amino acids. Sources of protein are milk, eggs, lean meats, fish, poultry, and cheese, with such vegetable products as soybeans, peanuts, and other legumes (peas and beans), cereals, and other cereal products.

Remember, a good diet calls for a protein supply from both animal (meat, milk, eggs, etc.,) and vegetable sources, to ensure that all of the essential amino acids are available to the body. The body cannot store protein in quantity, therefore it must be supplied daily. An insufficient supply causes the body to consume its small reserve and eventually its own tissue.

Fats. Fats, like carbohydrates, are a primary source of energy. On a pound-for-pound basis, fats contribute an average of more than twice as much energy as sugars and starches. For that reason we consider them a concentrated energy source. When necessary to plan a military ration to provide maximum energy-giving value with minimum bulk

weight, the inclusion of a relatively high percentage of energy foods is essential.

In temperate zones and for normal conditions of physical activity, it is recommended that at least 20 to 25 percent of the energy content of a ration be supplied by fat. For high levels of energy expenditures, such as actual combat or other extreme physical activities as well as for conditions of extreme cold, it may be necessary for 30 to 40 percent of the energy content of the ration to be made up of fatty foods.

Fat-rich foods are butter, cream, lard, lard substitutes, vegetable oils, the fats of meat, and cheese, all of which are included in the Air Force diet in sufficient quantities. Fats digest slowly; this delays the feeling of hunger. Thus, you find that the daily menu used in your kitchen directs that a certain amount of natural fats be served at every meal. On the other hand the excessive use of fat in cooking may have a bad effect on digestion. To be safe, follow your standard Air Force recipes to the letter. Remove excess fats that collect on the top of stews, soups, meat stocks, chili, etc. Check with your supervisor when you are to prepare meats containing a large amount of fat covering. Your supervisor tells you how much to trim off.

Exercises (015):

1. Carbohydrates are present in what types of foods?

2. What happens to energy foods that are eaten in excess?

3. How is the heat- or energy-producing value of food expressed?

4. Which nutrient is an indispensable part of every living cell in our body?

5. What is the body's chief source of energy?

6. What is an amino acid?

7. Which nutrient must be supplied to the human body daily since it cannot be stored in quantity?

8. Protein should be provided from what two sources to provide an adequate diet?

016. Identify and state the importance of minerals, vitamins, and water to good nutrition.

Minerals. Minerals are chemical elements that occur naturally. They are neither animal nor vegetable in origin. While the mineral elements of nutrition constitute only a small portion of the total body weight, they enter into all of the activities of the body to a much greater degree than their mere weight would seem to indicate. Minerals contribute greatly to the growth and health of the teeth and the bones. Together with vitamins they serve as regulating substances and are considered essential to the building and repair of the body.

The most important minerals are calcium, phosphorus, iron, copper, iodine, and salt. There are still other minerals that are essential for adequate nutrition; however, they are present in sufficient amounts in all Air Force diets and do not warrant special consideration.

Calcium. From the standpoint of military nutrition, calcium is considered to be one of the most important minerals. Unless foods that are rich in this mineral are carefully chosen and included in the daily menu, a serious shortage may result. Milk, milk products, peas, beans, and nuts are the chief sources of calcium. Eggs, cereal products, and leafy, green and yellow vegetables also contribute calcium to the diet.

The body uses calcium to maintain the bones and teeth; to produce clotting of the blood in wounds; and, in conjunction with potassium and sodium, to control the functioning of the heart. Although a small reserve supply of calcium can be stored in the bone structure of the adult, this reserve cannot be drawn on safely for a long period of time. An intake of 1.0 gram of calcium per day is recommended and the level of calcium in the diet should never fall below 0.7 gram.

Phosphorus. Seventy percent of the phosphorus in the body is combined with calcium in the formation of the body bone structure. The remaining 30 percent is associated with proteins, carbohydrates, fats, and various mineral and organic substances in the soft tissues. As such, it forms an essential part of every cell and is involved in all cell reproduction. Phosphorus is so widely distributed in foods that there is little chance of a phosphorus deficiency. Best sources are milk products, meats, and whole-grain cereals.

Iron. Iron is an important part of all living tissues in the human body, although the total amount in a normal person's body is small in comparison with the amounts of some of the other minerals. Approximately 70 percent of the iron is contained in the blood, principally in the hemoglobin (red coloring matter) of the red blood cells, where it functions in the transportation of oxygen by blood to all body tissues. Iron can be stored in the liver, spleen, and bone marrow where it is available for conversion into hemoglobin when the body needs it. There is evidence to indicate that iron is not used up or destroyed by the body

function but is conserved by the body and used over and over again. Iron is widely distributed in foods. The best sources are lean meats, eggs, edible animal organs such as liver and heart, green portions of plants, and vegetables such as peas and beans.

Copper. The chief role of copper in human nutrition is its action in the formation of hemoglobin. The quantity of copper necessary for adequate nutrition is very small. The foods that are the best sources of iron are also the best sources of copper. Thus, if the iron intake from the diet is adequate, this assures the proper copper intake.

Iodine. Iodine is an essential component of the thyroid hormone, a deficiency of which leads to the disorder of the thyroid gland, known as simple goiter. The body requires only small amounts of this mineral daily, but in some areas this amount is difficult to provide by means of natural foods. Iodine occurs only in seafood or in foods produced in soils which contain iodine. In recent years the use of iodized table salt, which contains .01 percent of iodine, has provided sufficient iodine to meet the body's needs.

Salt. Salt and water requirements are closely interrelated and depend, to a considerable degree, on climatic conditions and the extent of physical activities. Salt keeps the water content of the body at the required level (80 to 90 percent of body weight) so that it functions normally. Under normal physical and climatic conditions, the body's salt needs are taken care of through the foods consumed. But when perspiration is excessive, the loss of salt affects functioning of the whole body. In this situation, we have an increase in the body's need for salt. Food service personnel can take care of this situation by increasing the salt seasoning of the food or by making salt tablets available to individuals needing them.

Vitamins. Vitamins are organic compounds that are present in many foods. They are essential for normal growth and for the maintenance of health and life. They do not furnish energy nor act as building materials for tissues, but they are effective in regulating the use of food by the body. Vitamins are present in many foods, chiefly in vegetables and fruits and in the products of plant-eating animals. Liver and other edible animal organs are particularly rich in such vitamins as A, B_1, B_2, niacin, and vitamin C.

The Air Force menu is balanced nutritionally to provide vitamins in sufficient quantities, but poor handling or improper cooking procedures can destroy the vitamin content. We will discuss the conservation of vitamins in another section of this chapter.

Vitamin A. The chief function of vitamin A is to build up resistance to local infections of the skin cells, the membranes of the respiratory tract, and the digestive and genito-urinary systems. A lack of vitamin A produces night blindness, susceptibility to colds and lung infections, diarrhea and other digestive disturbances, dry and scaly skin, dry ear, and infected ears and eyes.

Vitamin B_1. This vitamin, known as thiamin, is part of the B complex. Since the body cannot store it, vitamin B_1 must be supplied daily. Vitamin B_1 prevents disturbances of the nervous system, maintains appetite, aids digestion, and checks the infection of the intestinal tract. It is sometimes called the morale vitamin

The daily requirement of vitamin B_1 varies with energy expenditure. A normally active person's daily needs of B_1 are supplied by one of the following: a pint of milk, five slices of whole grain or enriched bread, one medium potato, one egg, a cup of tomatoes, a cup of citrus fruit juice, or a 4- to 5-ounce portion of lean pork.

The main sources of vitamin B_1 are meats, particularly lean pork, and whole cereals or enriched flour products. Eggs, vegetables, and legumes also contain this vitamin.

Vitamin B_2. Vitamin B_2, known also as riboflavin, is often called the growth vitamin. It is associated with B_1 and is normally found in the same foods. The only food in which riboflavin exists separately is the white of an egg. The richest natural source is brewer's yeast. However, liver, kidney, and heart are almost as rich in this respect.

Vitamin B_2 is essential both to growth and to normal nutrition. A lack of vitamin B_2 may cause faulty teeth and bones, loss of weight, digestive disturbances, and nervous depression. Liberal amounts are required daily since the body cannot store it in appreciable quantities. Daily requirements are supplies by a pint of milk, generous helpings of fruit vegetables, one egg, or the normal meat ration.

Niacin. Niacin, also known as nicotinic acid, is another element in the B complex group. This acid, incidentally, is not the same as the nicotine found in tobacco. Its absence from the diet induces a disease called pellagra. This disease is rather common in some of the underfed countries but is rare among individuals whose diet is well balanced. The chief sources of niacin are meats (particularly liver), cereal products, and legumes.

Vitamin C. Vitamin C, otherwise known as ascorbic acid, is called the antiscurvy vitamin. The disease known as scurvy was at one time prevalent among sailors on long sea voyages due to lack of foods containing vitamin C. The lack of vitamin C in the diet can be fatal.

A person does not require vitamin C in great amounts. However, the body cannot store this vitamin. A daily glass of citrus fruit juice or tomato juice fills the requirement.

The chief sources of vitamin C are citrus fruits, tomatoes, and leafy green and yellow vegetables.

Vitamin D. Vitamin D, the "sunshine" vitamin, is the only vitamin the body itself manufactures through the direct influence of sunlight on the skin. In food, it is found in egg yolk, butter, cream, and milk. It is also found in some fish, especially salmon.

Miscellaneous. Other vitamins, such as E, K, and lesser known members of the B-complex group, are present in various foods. There is little doubt that a well-balanced diet of natural foodstuffs contains adequate amounts of these elements. For that reason it is not necessary to discuss them except to say that you can ensure that the personnel for whom you prepare food receive them in sufficient quantities if you give proper attention to food planning and preparing activities.

Water. Water is essential to life. It is the vehicle for transporting food materials to the body cells and the medium in which essential chemical changes take place. It helps to regulate the body temperature, eliminate waste products, and lubricate the body's moving parts.

The body gets its water from beverages and liquids we drink, from the solid foods we eat (many of which are largely water), and from the water formed in the tissues by the combustion of fuel foods. A good supply of liquids is necessary with and between meals.

The body loses its water through the skin in the form of perspiration, through the respiratory passages in the breathing proce , and through the alimentary tract and kidneys in the normal elimination process. Failure to receive the proper intake of water can be responsible for such disorders as general nervousness, inability to concentrate, headaches, loss of appetite, and constipation.

Exercises (016):

1. Minerals contribute to the growth and health of what parts of the body?

2. Minerals along with what other nutrient sources act as regulating substances?

3. From a military standpoint, which mineral is considered one of the most important?

4. How does calcium help the body other than to maintain bones and teeth?

5. What percent of phosphorus is combined with calcium in the body bone structure?

6. The largest percent of iron is contained in what part of the body?

7. What is the purpose of salt in the body?

8. What vitamin is sometimes called the morale vitamin?

9. What vitamin is also known as riboflavin?

10. What vitamin is known as the antiscurvy vitamin?

11. Which vitamin is the only vitamin manufactured by the body itself through the direct influence of sunlight on the skin?

12. What is the function of water in the body?

3-2. Conservation of Nutrients

The nutritive value of cooked foods may differ greatly from that of uncooked foods. This is especially true as it applies to vitamin content since vitamins may be lost as a result of solubility, oxidation, heat, and light. These losses differ with the individual vitamins and foods, and no one factor covers them all.

The effects on vitamin content of various methods of cooking meats—such as roasting, frying, broiling, and stewing—have been studied. Depending on the method of cooking used, thiamin retention ranged from 60 to 80 percent, niacin 70 to 100 percent, and riboflavin 80 to 100 percent. Similar studies with vegetables showed a thiamin retention of 55 to 70 percent and a riboflavin retention of 50 to 100 percent.

In the following paragraphs, we shall discuss each vitamin individually, pointing out the heating and cooking practices that cause vitamins to lose nutritive value.

017. State procedures for the conservation of nutrients in foods.

Conservation techniques. If you go by to the following rules when storing, thawing, and preparing foods, nutritive losses are held to a minimum:

a. Serve fresh raw fruits and vegetables often. When possible, serve fruits with the skins on.

b. Use fresh fruits and vegetables as soon as possible after they reach the dining hall.

c. Store fresh fruits and vegetables in a cool, dry, dark place.

d. Do not prepare or trim vegetables and fruits long before they are to be served.

e. Cover foods that have been prepared for cooking and store them in a cool, dark place.

f. Avoid blanching or boiling in excessive amounts of water. Dissolved minerals are lost when cooking water is discarded. Add vegetables while the water is boiling.

g. Do not overcook vegetables. Most foods are easily digested and have better color, flavor, and texture if cooked only until moderately tender.

h. Use the liquid (pot liquor) from cooked vegetables in soups, gravies, sauces, or stock.

i. Do not use baking soda (sodium bicarbonate) in cooking vegetables. While its use may preserve the color, it also destroys most of the important nutrients.

j. Heat canned vegetables quickly just before serving. Do not cook because canned foods are already cooked.

k. Store fresh meats in a refrigerator at the proper temperture (33 to 38°F) until time for preparation.

l. Do not allow meat or poultry to stand for long periods of time after thawing. This results in excessive loss of flavor and nutrients through the escaping juices.

m. Cook fish before it is completely thawed if you are using a dry-heat method of cooking. Fish used in chowder, soup, or stew need not be thawed before cooking.

n. Store butter, margerine, lard, and other fats in the refrigerator in tightly covered containers.

Vitamin A. Foods tend to lose their vitamin A content when they are stored for prolonged periods under conditions of high temperature, when they are exposed to the air, and when they are cooked under intense heat. Since vitamin A is soluble in fats, you should not cook foods that are rich in this vitamin in grease.

Never heat butter to a frying temperature. Such heating results in the complete loss of the vitamin A content.

Vitamin B_1. Since vitamin B_1 is soluble in water, a serious loss occurs when foods are allowed to stand in water or on steamtables for prolonged periods. Also, avoid long cooking periods, particularly when cooking involves large quantities of water, since that also reduces the vitamin B_1 content of food. Vitamin B_1 is not affected by the exposure of food to air.

Vitamin B_2. Vitamin B_2 is also soluble in water. For that reason, don't allow foods containing this important vitamin to stand in water or on steamtables. Do not subject such foods to prolonged periods of cooking, particularly when large volumes of water are involved. Vitamin B_2 is also affected by light, with continued exposure resulting in serious losses.

Vitamin C. Vitamin C is probably the easiest of all vitamins to destroy. It is affected by heat and air, by using baking soda in cooking, by cooking in copper utensils, and by letting cooked food stand for long periods.

Cooking losses can amount to as much as 50 percent of the original vitamin C content. Losses resulting from simple exposure to air are also quite serious. You should use fruit juices, for example, as quickly as possible once they have been exposed to the air since most of their vitamin C content is lost within a short time.

Exercises (017):

1. Where should you store fruits and vegetables?

2. How is the color, texture, and flavor of vegetables preserved?

3. Which food products should not stand for long periods of time after thawing?

4. Foods tend to lose their vitamin A content when they are stored for a prolonged period under what condition?

5. Which vitamin is not affected by the exposure of food to air?

6. Which is probably the easiest of all vitamins to destroy?

3-3. Measuring Standards and Cooking Terms

Some cooks are called guesstimaters. They are the ones who try to prepare food without properly measuring ingredients. Even the best of world-renowed chefs rely on recipe measurement instructions to prepare all their favorite dishes.

018. Name the graduated measures of standard cups and spoons and name the manual that covers weighing and measuring procedures.

Weight and Measurement. As an apprentice cook, you can become a skilled cook faster by doing as skilled chefs do; that is, use measurements to their fullest extent. Don't be a guesstimater. Weigh and measure ingredients carefully and correctly.

It is preferable to weigh ingredients if scales are available; otherwise, measure them in graduated measures, standard cups, and spoons. The standard measuring cup is of 1/2 pint or 8-ounce capacity. Cups are based on US standards and are so marked. Subdivisions are marked on the cup to measure 1/4, 1/2, 3/4, 1/3, and 2/3 cup.

Measuring spoons are standardized as well as measuring cups. You can obtain sets of spoons which measure 1 teaspoon, 1 tablespoon, 1/2, and 1/4 teaspoon. Sixteen level tablespoons are required to fill 1 cup and 3 teaspoons are equal to 1 tablespoon.

When emergencies arise, you can still obtain satisfactory results even with an unmarked utensil if you know its capacity. To do so you will have to judge the point on the utensil that equals 1/4, 1/3, 1/2, or 3/4 full.

We suggest that you refer to the pages on weighing and measuring in AFM 146–12, Volume 1, *Armed Forces Recipe Service*, before you prepare a dish. Use exact weights and measurements for each recipe you use.

Exercises (018):

1. What are the subdivisions marked on a standard measuring cup?

2. What are the measuring graduations of standard measuring spoons?

3. What is the publication that covers procedures for weighing and measuring?

019. Identify the meanings of selected cooking terms.

Specific terms are used in all career fields to define certain procedures or methods. This is also true of the Food Service Career Field.

Cooking Terminology. As you progress in your training, you encounter many terms that may seem strange to you. These terms are used in your career field to define certain procedures or methods.

Bake. Cook in an oven with dry heat. The term is usually applied to oven-cooked foods, but baking may be done on hot metal. The baking of pancakes or waffles is an example.

Beat. To use a fast, rotary, over and under movement to incorporate air into a product. Most commonly used in egg cookery or products containing eggs.

Boil. To cook in a liquid that has been brought to a boiling point.

Braise. Brown food in a small amount of fat and add small amounts of liquid at a time; simmer gently until tender.

Bread. To coat with a mixture, such as dipping in beaten eggs and then in bread crumbs.

Broil. To cook over or under direct heat or open flame.

Broth. Liquid in which food has been cooked.

Coat. To completely cover the outer surface of any food with any coating agent such as flour.

Deep fat fry. To cook any food in a deep fat medium.

Fry. To cook any food in a small amount of fat.

Garnish. Add accessory to any food product for color and eye appeal.

Leavening. Any ingredient which, when added to a product, causes it to rise during cooking. Refers to such agents as baking powder, yeast, or soda.

Roast. To cook with dry heat in an oven with fat side of meat up making it self basting.

Roux. Cooked mixture of fat and flour used as a thickening agent in a soup or sauce.

Saute. To cook in a small amount of fat on top of the stove.

Score. To cut shallow slits in a food item, across the top or in a pattern. Allows larger surface areas for extraction of natural fats and enhances eye appeal of the product.

Simmer. To cook at or just below the boiling point.

Steam. To cook over water or in a steam-jacketed kettle where the cooking medium is steam.

Stew. To cook in a liquid held at simmering temperature.

Stock. Liquid in which meat, bones, fish, poultry, and/or vegetables have been cooked. Used as basic ingredient for soups, gravies, and sauces.

Exercises (019):

1. Match the cooking term in column B with its appropriate meaning in column A. Place the letter of the cooking term in front of the meaning.

Column A	*Column B*
_____(1) To cook in a liquid that has been brought to a boiling point.	a. Broil.
_____(2) A cooked mixture of fat and flour.	b. Boil.
_____(3) To add accessory to any food product for eye appeal.	c. Fry.
_____(4) To cook in a small amount of fat.	d. Stew.
_____(5) To cook in a liquid held at simmering temperature.	e. Roux.
_____(6) To cook over or under direct heat or open flame.	f. Garnish.

020. Distinguish among kinds of herbs and spices by identifying descriptions of each.

The object of seasoning is to enliven or enhance the flavor of the food we are preparing. You must take care to avoid overseasoning or underseasoning. When we say "season to taste," we don't mean season to your taste, but season to the taste of those who will eat the product. This means that you must use an average amount of seasoning—neither too much nor too little.

Herbs and Spices. Herbs and spices, when fresh, contain aromatic oils that are strong. They should be used sparingly. Also, it is a good policy never to use more than two highly flavored seasonings in any one meal. Remember that most herbs lose their flavor during long cooking periods. To avoid loss of flavor, add the herbs during the last phase of cooking.

The following paragraphs describe some of the more common herbs and spices you come in contact with during food preparation.

Allspice is cultivated in Mexico and the West Indies, particularly Jamaica. It is a pea-size fruit that grows in small clusters on a tree. Its uses are: whole—gravies, pickling meats, and broiling fish; and ground—baking, puddings, relishes, and fruit preserves.

Bay leaves, which are grown in the Mediterranean countries, principally in Asia Minor, are dried leaves of an

evergreen tree. They are used for pickling, stews, spice sauces, and soups.

Cayenne pepper is grown mainly in Africa. It is a small red pepper, finely ground for export, used in meats, sauces, fish, and egg dishes.

Celery seed, imported from India and Southern Europe, is a minute, olive-brown seed obtained from the celery plant. It is excellent in pickling, salads, fish, salad dressings, and vegetables.

Chili powder is made from Mexican chili peppers and blended seasonings (usually oregano, cumin, and garlic salt). It is the basic ingredient for Mexican cooking.

Cinnamon is from Sri Lanka. It is the aromatic bark of the cinnamon tree. Whole cinnamon is used in pickling, preserving, and flavoring puddings and stewed fruits. Ground cinnamon is used in baking goods, in mashed sweet potatoes, and with sugar and cinnamon toast.

Cloves are from the East Indies, Madagascar, and Zanzibar. They are the fruit (dried flower buds) of a tree belonging to the evergreen family. Cloves are used for pork and ham roasts, stew, and vegetables.

Garlic is much esteemed in southern Europe and grown extensively. This is the most strongly flavored of the plants in the allium family and it is used as a condiment for seasoning other foods.

Onions are cultivated over large areas in temperate and tropical climates. This plant of the lily family has a strong odor and is very highly valued for the flavor it gives to other foods.

Oregano is native to Italy and Mexico. Oregano is a good flavoring for pork dishes and a fine seasoning for stews, sauces, and gravies.

Paprika is grown chiefly in Spain, Hungary, and the United States. Paprika is a sweet red pepper, ground after the seeds and stem have been removed. It is used as a colorful red garnish for any pale food.

Parsley is a widely cultivated garden plant with curly leaves. It is used as a garnishment.

The chief sources for pepper (black and white) are India and Indonesia. It is a small dried berry of a vine. Pepper is the world's most popular spice and is used in just about all foods.

Poultry seasoning is a mixture of herbs and spices. It is used for poultry, veal, pork, and fish stuffings.

Sage comes from Yugoslavia and Greece. Sage is a shrub about 2 feet high. It is particularly good with pork and pork products. It is also used in stuffings and sausages.

Thyme is grown in temperate climates, such as southern Europe. Thyme is a low shrub about a foot high. It is used for stews, soups, and poultry stuffings.

Exercises (020):

1. Match the terms in column B with the most appropriate description in column A by writing the correct letter in the blank provided.

Column A	*Column B*
_____ (1) Basic ingredient in Mexican cooking.	a. Cloves.
_____ (2) World's most popular spice.	b. Pepper.
_____ (3) A colorful garnish.	c. Thyme.
_____ (4) Fruit of a tree belonging to the evergreen family.	d. Chili powder.
_____ (5) A low shrub about a foot high.	e. Paprika.

3-4. Cooking Methods

To cook is to expose foods to the action of heat in order to make them more digestible. There are various ways of applying heat to foods. The method to use depends to a great deal on whether the item is tough or tender. If the item is tough, it requires a lengthy cooking period to make the item more appetizing and digestible. If the item is tender, use a faster cooking method.

Cooking is performed by two basic methods—dry heat and moist heat. One of these is used regardless of the product cooked, be it meat, vegetable, or poultry.

021. Differentiate among dry-heat cooking methods.

Dry-Heat Cooking Methods. When cooking with dry heat, no liquid is added. In most cases, the product itself supplies enough fat and/or juices to keep it from burning. Dry heat is used when cooking tender cuts of meat, fish, young poultry, some types of vegetables, and most pastry and bread products. Dry-heat cooking procedures are explained in the following paragraphs.

Roasting, one of the most popular cooking procedures, is done in an oven. The food being roasted must be kept uncovered; otherwise the food steams. The term "roasting," although essentially the same as baking, generally applies to meat items, while baking applies to fish and dough products.

Broiling is cooking by direct heat over coals or under gas flame or electric heating unit. This cooking procedure is used mainly in the preparation of meat, poultry, and fish. It is a very quick and simple method but is limited to the cooking of very tender meat cuts, such as steaks and chops.

Pan broiling is cooking on top of the range in a preheated frying pan or on a griddle, using for grease the fat of the meat itself.

Pan frying is done with just enough added fat (grease) to cook the food. Only certain foods are adapted to pan frying. Don't use this cooking method unless the recipe prescribes it.

Deep-fat frying is cooking food by completely covering it with hot fat. In deep-fat frying, foods are cooked quickly enough to prevent their absorbing any of the cooking fat. Holding the cooking fat at the correct temperature is very important when using this method. Too high a temperature

causes the product to become hard and dry; too low a temperature allows the product to absorb the cooking fat.

Exercises (021):

1. Match the dry-heat cooking method in column B with the definition that best describes it in column A.

Column A	*Column B*
_____ (1) Cooking food by completely covering it with hot fat.	a. Roasting.
_____ (2) Cooking food with just enough fat to cook the food.	b. Broiling.
_____ (3) Cooking by direct heat over coals, under gas flame, or electric heating unit.	c. Pan or griddle broiling.
_____ (4) Cooking on top of the range, using for grease the fat of the meat.	d. Pan frying.
_____ (5) One of the most popular cooking procedures done in an oven.	e. Deep-fat frying.

022. Identify descriptions of specific moist-heat cooking methods.

Moist-Heat Cooking Methods. Moist-heat cooking is the process of cooking food in a liquid, usually water. The moist-heat cooking methods described in the following paragraphs are generally used for less tender cuts of meat and for most vegetables.

Simmering is cooking in a liquid that is held just below the boiling point. When the temperature is right for simmering, the bubbles of steam that rise from the bottom of the container disappear before reaching the surface of the water.

Braising is similar to simmering. The food is first browned in a small amount of fat and is then simmered in a liquid until done. Braising provides long, slow cooking and is recommended for the less tender cuts of meat.

Boiling is the heating of a liquid until it bubbles; the bubbles rise to the surface and pass off in the form of steam. Cooks must remember that high or violent boiling does not cook foods better or faster than a slow boil. It is a waste of fuel. The liquid is the same temperature either way.

Steaming is cooking food in the steam produced from boiling water or other liquids. This is an excellent way to cook most vegetables and foods of high-starch content.

Pressure cooking is done in a tightly closed, specially constructed cabinet or container that does not allow steam to escape. Steam builds up pressure in the cooker and provides a moist heat above the boiling temperature. The temperature is controlled by the amount of pounds of pressure allowed to accumulate.

Exercises (022):

1. Match the moist-heat cooking method in column B with the statement in column A that most nearly describes it.

Column A	*Column B*
_____ (1) Browning food in a small amount of fat before simmering until done.	(a) Simmering.
_____ (2) Cooking in liquid that is held just below the boiling point.	(b) Braising.
_____ (3) Heating of a liquid until it bubbles.	(c) Boiling.
_____ (4) Cooking food in a tightly closed container.	(d) Pressure cooking.
_____ (5) Cooking food in the steam produced from boiling water.	(e) Steaming.

3-5. Identification of Meats, Seafood, and Poultry

To properly prepare meats, seafoods, and poultry, you should know how to distinguish among them. In this section, we will discuss the various cuts of meat, classes of poultry, and classes of seafood.

023. Distinguish among the meat cuts of beef, veal, or pork.

As we have already pointed out, to cook meat properly you must first learn to identify a meat cut. You start by either classifying it as beef, veal, or pork. PB "Beef." Beef is the flesh of mature cattle at least 1 year old. The best beef is produced by steers under 3 years of age, which are bred purely for meat producing purposes and subsist chiefly on a grain diet.

Veal. Veal is the flesh of young calves. In comparison with beef, veal has a higher water content, is lower in fat and extractives (juice), and contains a relatively low percentage of connective tissues. This has a pronounced bearing on the cooking of veal and we will discuss this later in this chapter.

Pork. Pork is low in juices. Its typical flavor is due largely to fat imbedded in the flesh. The composition of pork is determined by two factors—color and quality. The color of young pork is grayish pink, changing to a delicate rose in older animals. Quality pork is relatively firm and fine grained and free from excess moisture. The lean portion is well marbled and covered with firm, white fat.

Exercises (023):

1. Match the appropriate meat in column B with the definition that best describes it in column A.

Column A	*Column B*
_____ (1) Mature cattle at least 1 year old.	a. Pork.
_____ (2) Flesh of young calves.	b. Veal.
_____ (3) Lowest in juices.	c. Beef.

024. Identify classes of poultry.

Classes of Poultry. Proper poultry cooking requires a knowledge of the class of poultry you are preparing. The classes that follow apply to dressed poultry and individual carcasses of ready-to-cook poultry. When we speak of ready-to-cook poultry we are referring to birds that have been bled, picked, and eviscerated (head, feet, and inedible organs removed).

Chickens. ***A broiler or fryer*** is a young chicken usually under 16 weeks of age; it can be of either sex. It has tender meat and a soft, pliable, smooth-textured skin and flexible breastbone; in older birds, it is rigid and firm.

A roaster is a young chicken, usually under 8 months of age, with the same features as broilers and fryers. However, the breastbone cartilage is somewhat less flexible than that of a broiler or fryer.

A capon is a castrated male chicken, usually under 10 months of age, that has tender meat with soft, pliable, smooth-textured skin.

A hen or stewing chicken is a mature female bird, usually more than 10 months of age, with less tender meat than that of a roaster. It has a nonflexible breastbone.

Turkeys. ***A frying turkey*** is a young, immature bird of either sex, usually under 16 weeks of age. It has tender meat with soft, pliable, smooth-textured skin and has a breastbone cartilage that is flexible to the touch.

A young hen turkey is female, usually under 8 months of age, that has tender meat with soft, pliable, smooth-textured skin and a breastbone cartilage that is somewhat less flexible than that in the frying turkey.

A young tom turkey is a male turkey, usually under 8 months of age, having the same skin and flesh characteristics as those in the young hen turkey.

Exercises (024):

1. What is a roaster?

2. What is a capon?

3. What is a mature female bird usually more than 10 months of age with a non-flexable breastbone called?

4. What is a young tom turkey?

025. Identify classes of seafood.

Classes of Seafood. Seafood is classed as finfish and shellfish. A finfish is an animal that has a spine, gills, and, in most cases, scales. Trout, bass, salmon, and catfish are common examples. Shellfish are edible, spineless animals protected by a shell. Shrimp, oysters, clams, and lobsters are prominent members of the shellfish family.

Finfish. The two principal forms of finfish served in Air Force dining halls are fresh-frozen, and prefabricated frozen. The reason the Air force consumes so much frozen seafood is that it can be handled, stored, prepared, and cooked easily. Fish steaks, cross sections or cuts or a large dressed fish, and fish fillets practically boneless meaty sides of fish cut lengthwise away from the backbone, are served to military personnel. Fresh fish should arrive in the dining hall in a frozen state, without signs of thawing and refreezing, and they should be kept solidly frozen until ready for use.

Shellfish. The two classes of shellfish you use in the Air Force are mollusks and crustaceans. Probably the only mollusks you get are the bivalves (two-shell), such as oysters, scallops, and clams. Lobster, shrimp, and crab are crustaceans.

Exercises (025):

1. What are the two classes of seafood?

2. What are the two forms of finfish served in the dining halls?

3. List the two types of shellfish served in Air Force dining halls.

4. List the different types that are categorized as shellfish.

3-6. Meat Cookery

Modern research has developed some basic methods of meat cookery. As we have already pointed out, certain methods are adapted to cooking tender meat cuts, others to cooking less tender cuts.

Normally, tender cuts are best cooked by dry-heat methods; that is, by hot air in an oven, radiant heat in a broiler, or on a hot griddle. Some tender cuts of meat may be pan or deep-fat fried. Frying is an excellent way to prepare breaded meat products (chops, croquetes, etc).

Less tender meat cuts are made tender by moist-heat methods of cooking. The meat is surrounded or covered by hot liquid or is subjected to steam or steam pressure.

There are a few exceptions to the rule of dry heat for the tender cuts and moist heat for less tender cuts. For example, certain inherent texture and flavor characteristics of tender

veal and pork cuts make braising (moist-heat cooking method) an excellent way to prepare them.

026. State factors that affect meat cookery.

Factors Affecting Meat Cookery. In large-quantity meat cooking, there are a number of factors that you must consider in addition to the cooking method you use. These factors are:

- ***Type and grade of meat.***
- ***Size of cuts and total amount prepared at one time.***
- ***Number of cuts or pieces to a pan.***
- ***Oven or griddle load.***
- ***Type of equipment.***
- ***Frozen or fresh product.***

You will notice in our discussion of factors affecting meat cookery that we do not cover type and grade of meat. We will discuss those in our next objective segment.

Size, shape, and style of cut. Usually the larger the cut of meat, the longer the total cooking time required. A flat roast, however, cooks in less time than a chunky one of the same weight. Since the distance from the outside to the center of the meat is less in the flat roast than in the chunky one, less time is required for the heat to penetrate.

From a style-of-cut standpoint, standing rib roast cooks in considerably less time than if the same roast was boned and rolled. The reason is that in boning and rolling the roast, the distance from outside of the roast to its center is increased. The removal of bones, which act as conductors, also contributes to the cooking time variance. As much as 5 to 10 minutes per pound additional time may be necessary to cook rolled roast as compared to cooking the same roast with the bone left in.

Number of cuts per pan. The number of meat cuts you place in a roasting pan has a bearing on the time required to cook the product. Meat cuts, especially roast, should be evenly spaced in the pan with enough space between each cut to allow the hot air to circulate freely. Overloading a griddle not only increases the cooking time but may also produce partially cooked products.

Oven load. Load the oven evenly. Keep the pans from touching the sides or back of the oven and leave at least a 1/4-inch space between pans for proper circulation of hot air in the oven. The more meat you place in the oven at one time, the greater the cooking time.

Equipment. You must consider the type and condition of available equipment in the preparation of meat dishes. A cook cannot produce a good roasted product if the ovens do not retain the proper meat-roasting temperature.

Frozen products. When cooking meat in a frozen state, do not crowd roasts in the pan or overload the griddle. Putting too much frozen meat into ovens or on griddles lowers the temperature rapidly, and the time needed for recovery is excessive. When cooking frozen meats allow for a longer cooking time at a lower temperature.

Exercises (026):

1. The cooking time is longer or shorter for a large cut of meat?

2. Why should meat cuts of roast be evenly spaced in a pan?

3. What a larger quantity of meat is in an oven at one time, what effect does this have on cooking time?

4. What must you consider in the preparation of meat dishes?

5. Putting too much frozen meat into an oven or on a griddle does what to the temperature?

027. Distinguish between the characteristics of beef and veal.

You need to know the types and grades of meat the Air Force uses in order to use the proper cooking methods. You also need to understand the types and grades of poultry and seafood.

Beef. Different cuts and grades of beef vary greatly in tenderness. For this reason, it is necessary to adapt the cooking method to the cut issued. All of the thick cuts of better grades of beef, except the outside round, chuck, neck, and shank, are tender enough to cook by dry heat, especially if you use low temperatures. On the other hand few cuts of low-grade beef can be properly prepared by dry heat.

Less-tender cuts are from muscles that do a lot of work and have a high ratio of connective tissue. Less-tender cuts of beef are outside round heel, flank, shank, shoulder clod, neck, chuck tender, plate, and brisket. These cuts are best suited for stews, pot roast, and ground meat dishes.

Veal. In cooking veal you must consider two inherent characteristics: (1) lack of fat and (2) lack of connective tissue. Veal muscle is tender because it is the flesh of a young animal; but it contains little connective tissue and, therefore, requires long, slow cooking to make the whole cut tender. It formerly was thought that veal could not be cooked by true roasting because of this fact; however, experience shows that if you use a constant temperature of 300°F, you may roast veal very successfully.

Do not broil or pan-broil veal because it is lacking in fat and because of the small amount of connective tissue which requires a long, slow cooking in moist heat to make it tender. Braising produces a good product, as does the stewing of less-tender cuts of veal. Whatever cooking method you use, remember that veal should be cooked well done.

Exercises (027):

1. What type muscles make up less-tender cuts of meat?

2. What two inherent characteristics must be considered when cooking veal?

3. Why is veal muscle tender?

4. To what degree of doneness should veal be prepared?

028. Distinguish between techniques involved in preparing ham and fresh pork.

Ham. Commercial, domestic, and regular cured hams have a low salt content and may be cooked without parboiling or soaking. The bone may be left in or removed before cooking according to how you plan to use the ham.

Fresh pork. Fresh pork is cooked in the same way as fresh beef, except that you use a lower temperature and cooking time is longer per pound. Pork must always be cooked well done. This is to ensure that any worms, known as trichinella spiralis, are killed before the meat is eaten. If you use a meat-cooking thermometer and place it properly in the pork, you can be sure of a well-done roast.

The percentage of shrinkage when you cook pork is high because of its high-fat content, but by watching the cooking temperature you can hold the shrinkage to a minimum. Always check your recipe in AFM 146–12 for detailed instructions before you prepare any meat item.

Exercises (028):

1. How is fresh pork prepared?

2. To what degree of doneness should pork be prepared?

3. Why is the rate of shrinkage so high in pork?

4. Where can you obtain prepared detailed instructions on cooking meat?

029. State the procedures to follow in preparing poultry and seafood.

Poultry. You may prepare poultry in a number of ways, depending on the age and size of the bird. Young chickens may be broiled, fried, or roasted. Prepare older birds as fricasses, stews, etc. Cook young birds by the dry-heat method. Use only the youngest, tender birds for broiling. When deep-fat frying be sure not to overcook the birds; overcooking dries out the meat. Use the moist-heat method for older birds. Because of their toughness, the steam is needed to tenderize the muscles.

Seafood. Dry-heat methods of cooking are generally used in the preparation of finfish. Cooking time depends on the thickness of the fish and the type of preparation. Overcooking fish makes it tough or dry. As the fish cooks, you can test it from time to time by pressing it lightly with a fork. If the muscle fibers separate into flakes, it is done.

Shrimp is generally boiled in water, either before or after shelling. Only a short cooking time is needed for shrimp. They turn pink when cooked.

Oysters can be fried, simmered, or baked in a casserole. They should be fried only until light brown. When simmering or preparing a casserole, heat only to the boiling point, then turn off the heat.

When you are preparing poultry or seafood, be sure to consult recipes for detailed instructions.

Exercises (029):

1. What determines how poultry is prepared?

2. What method should you use to prepare older birds?

3. What method of cooking is generally used in the preparation of finfish?

4. How do you test fish to see if it is done?

3-7. Vegetable and Fruits

The nutritive value of fruits and vegetables is important to the human diet and daily food requirements. Proper preparation and cooking transforms the structure and texture of vegetables and fruit, making them more desirable and attractive in appearance.

030. State factors and procedures for preparing fresh, frozen, and canned vegetables.

Vegetables. The food value of any vegetable depends on two factors: (1) the way it is prepared and (2) the nutrients that have been preserved. Three methods are most commonly used in the preparation of vegetables—baking, steaming, and cooking in a liquid. The following paragraphs give you certain measures to follow when preparing different types of vegetables.

Fresh vegetables. The first step in the preparation of fresh vegetables is to wash them thoroughly and remove all unusable portions. When peeling vegetables always remember that most of the food value is concentrated next to the skin; for this reason keep the peeling as thin as possible. Keep vegetables under refrigeration or in a cool place until ready for preparation.

The process of cooking fresh vegetables is very important. Have the water boiling before vegetables are added. Then bring the water back to a boil and reduce the heat and simmer. Always cook vegetables in the shortest time possible, using as little water as possible. The following steps conserve valuable vitamins and minerals:

(1) Cook vegetables until tender: it is better to undercook vegetables than to overcook them.

(2) Remove vegetables from water as soon as they are cooked, since soaking destroys vitamins. With the exception of cabbage, cauliflower, brussel sprouts, and turnips, all vegetables should be covered while cooking.

Frozen vegetables. Frozen vegetables are used to a great extent today. They require less preparation and cooking time and also have less waste.

Frozen vegetables do not require thawing before being cooked. They may be placed directly into boiling salted water. Break tightly frozen packages into smaller pieces to speed the thawing when they are added to the boiling water. After the vegetables have been added to the boiling water, bring the water back to a boil, reduce the heat, and simmer until done. Cooking time begins when the water comes to a boil after the vegetables have been added. The same general rules apply to both fresh and frozen vegetables.

Canned vegetables. Most canned vegetables have been precooked and need only to be heated before serving. Excessive prolonged heating destroys nutritive value, decreases palatability, and ruins the appearance of the vegetables. Prepare canned vegetables in small quantities just before serving.

Exercises (030):

1. The food value of any vegetable depends on what two factors?

2. What are three methods most commonly used in preparing vegetables.

3. What are three factors to remember when heating canned vegetables?

031. State procedures to follow in preparing fruit.

Fruit. One may use fruit in many ways. In addition to serving it fresh, you can make fruit into pies, salads, and desserts. The people you are serving do not tire of fruits, especially if they have a little variety. From the standpoint of health, fruit contains vitamin C and larger amounts of other vitamins and minerals. Such fresh fruits as apples, pears, oranges, and plums should be served often and in their original form.

When you must prepare and cut fruit for cooking, don't pare it until immediately before cooking. If served raw, do not pare until just before serving. Pared fruit loses moisture and becomes discolored if it is exposed to the air for a long period of time. When it is necessary to pare fruit in advance of meal time, cover the fruit with a thin syrup or lemon juice to prevent discoloration. Pare fresh fruit as thin as possible, since most of the food value is located near the skin.

The use of frozen fruit saves time and effort because the fruit is ready for cooking or serving right out of the package. Keep frozen fruit frozen until just before use; otherwise it changes color, becomes soft, and loses its flavor. Some frozen fruits have to be sweetened with sugar before serving. The amount of sugar required depends on the type of fruit and individual tastes. It is a good idea to sweeten sour fruit lightly in the kitchen and let the consumer sweeten it to taste.

Canned fruit has the greatest nutritive value if consumed immediately after it is removed from the can. When fruit must be stored after removing it from the can, the syrup should cover the fruit, and it should be placed under refrigeration. Canned fruit can be served in many ways, and since a variety is always available, there is no reason for a person to become tied to only one way of preparing it.

Exercises (031):

1. How long should you keep frozen fruit frozen before serving it?

2. Why is it necessary to cover pared fruit with lemon juice or a thin syrup?

3. Why should you pare fruit just before serving?

4. Where is most of the food value located on fresh fruit?

3-8. Sauces, Gravies, and Soups

All sauces and gravies have the same fundamental purpose; to enhance the flavor, appearance, and nutritive value of the foods they accompany. The nutritive value of soup is very high. It is important as a first or second course dish. The best soups are made from meat stocks, such as chicken, turkey, or beef. Ham and pork stocks are used only for bean or pea soups.

032. State the procedures for preparing sauces and gravies.

Thickening Agents. The main thickening agent for sauces and gravies is roux. A roux is a smooth, cooked mixture of fat (butter, margarine, shortening, or meat drippings) and flour. Roux may or may not be browned, depending upon the type of food you are going to prepare. A liquid (milk, meat stock, or beef base and water) is added to the roux; the mixture is stirred briskly and constantly. It thickens as it is simmered. Other thickening agents are edible corn, wheat, and potato starches. Recipes may also specify eggs to be used as binders or thickeners.

Sauces. Generally, most sauces are thickened liquids or stocks. Sauces are classified as special, white or cream, and dessert sauces.

Special sauces. These sauces may or may not be thickened. They complement special foods such as raisin sauce with ham or barbeque sauce with spareribs.

Cream or white sauce. This sauce is made by thickening milk with a roux. In this case the roux is made from melted butter or margarine and flour. Creamed beef on toast is an example of the basic white sauce.

Dessert sauces. These are the sweet sauces used on desserts such as bread pudding, ice cream, cakes, etc. Thickening agents vary according to the recipes.

Gravies. These are usually made from the meat drippings. Meat drippings are the fat and juices which escape from the meat during the cooking process. At all times, when possible, use these meat drippings for a better tasting group. If you do not have any meat drippings available, a can of soup, gravy base or boullion cubes serve the same purpose. The four most common gravies used in Air Force dining halls are: (1) brown, (2) cream, (3) natural, and (4) Au jus.

Brown gravy. It is prepared by browning the roux to give it a golden, brown look. Water, meat drippings, and the necessary seasonings are then added. It is then simmered until it reaches the proper consistency.

Cream gravy. In making this gravy the roux is not browned, and milk is the liquid added instead of water. Chicken gravy is usually made this way.

Natural gravy. This type of gravy is not thickened. Instead it is made by adding water and seasonings to the meat drippings after the excess fat has been skimmed off. It is then simmered until all the ingredients are well blended.

Au jus. Au jus means "with juice" and this gravy is exactly that. It consists of only the natural juices of the meat.

Exercises (032):

1. What is the main thickening agent for sauces and gravies?

2. How are sauces classified?

3. What is done in order to give brown gravy its golden, brown look?

4. What liquid is used in the preparation of cream gravy?

033. State the procedures for preparing soup.

Meat stock. In order to prepare a tasty, highly nutritional meat stock, start with cold water. Add to this a bone or bones, meat and/or vegetables. Cook these at a slow simmer. This process extracts valuable proteins, fats, mineral, and gelatin. The stock can be either browned or white. The browning process develops flavor, particularly in beef. No heavy seasonings are needed. If the stock was prepared for later use, the stock should be cooled to 45°F or below within 4 hours. Use shallow pans (no deeper than 4 inches) or small containers (not more than 2 gallons in capacity) or circulate cold water around the outer surfaces of the containers to speed the cooling process. As the stock cools, the fat solidifies on the top which forms a protective cover that helps prevent any bacterial growth.

Soups. Soups are classified into two groups: (1) thin and clear, or (2) thick and creamy.

Thin and clear soups. These are strained so that all meats and vegetables have been removed. Thin and clear soups are commonly called broth, boullion, and consomme.

Thick and creamy soups. These are heavier soups. These soups may have a meat stock as a base and are thickened

with a roux or a cream sauce. Milk is usually used as a liquid for making creamy soups. There are few basic types of thick and creamy soups; they are puree, vegetable, chowder, and gumbo.

Puree. Puree soups are thick, heavy soups made by straining the cooked vegetables or meat through a sieve and then adding them to the soups. You should add a small amount of roux to the puree to keep it from settling to the bottom.

Vegetable. Old-fashioned vegetable soup is a popular soup. It is made from a meat stock. The seasonings and vegetables should be added midway through the cooking period. Never overcook the vegetables as this causes them to fall apart.

Chowder. These are creamy soups which contain a large amount of coarsley cut food. Since these soups are made with milk they should never be boiled. Some recipes call for a small amount of roux to be added in order to thicken it, an example would be New England clam chowder.

Gumbo. These are similar to vegetable soups, but they differ in ingredients. This soup is made with chicken stock as the base and may contain all parts of the chicken. The other main ingredients are okra, tomatoes, green peppers, and rice. Like vegetable soup the vegetables and rice should be added midway through the cooking period.

Exercises (033):

1. To what temperature should stock be cooled when prepared for later use?

2. What natural purpose does solidified fat on top of soup stock serve?

3. Into what two groups are soups divided?

4. What are the main ingredients in a gumbo?

3-9. Breakfast Foods and Dairy Products

Many forms of breakfast cereals are on the market. They are made of corn, wheat, oats, rice, and barley, or a combination of these grains. These cereals may be uncooked or ready to eat; whole grain, enriched or assorted; puffed, toasted, "exploded," shredded, or altered in other ways. These grains are made more appealing in flavor, texture, appearances, and in increasing the nutritive value.

034. State the preparation procedures for cereals.

Preparation of Cereals. They are divided into two types: (1) ready to cook and (2) ready to eat.

Ready to cook. These cereals are divided into three groups: (1) fine grain, such as farina or corn meal; (2) flake grain, such as rolled oats or flake wheat; and (3) whole grain, such as rice or hominy.

a. Fine grain. These cereals such as farina should be combined with enough cold water to form a smooth paste to prevent lumping. The rest of the required liquid is brought to a boil. The paste is stirred slowly and carefully into the boiling water. Covering the cereal prevents the formation of a skin on the top of the cereal. A ratio of approximately 6 parts of water to 1 part cereal is used in preparing the cereal. If the consistency of the cereal is too thin, excess moisture can be evaporated by further cooking. Cereal that is too thick can be thinned by adding a small amount of boiling water. Cooked cereals thicken even more after setting. Since they are served from the steam table, allow for more thickening.

b. Flaked grain. These cereals such as rolled oats should be sprinkled gently into boiling, salted water. Slight stirring may be required only if the water stops boiling. This cereal may be cooked at a gentle boil over direct heat. Unnecessary stirring or excessive boiling produces a sticky, gummy mess. Use 3 parts of water to 1 part of cereal.

c. Whole grain. These cereals such as hominy should be added slowly into boiling, salted water. Stir occasionally in order to prevent lumping. Use 6 parts of water to 1 part of cereal.

Ready to eat. The variety of ready-to-eat cereals are many. These precooked cereals are served directly from the box without further preparation. They are packed in individual servings. When the boxes are sealed tightly, the cereal stays crisp. If the seal is broken, damp weather may destroy crispness. Crispness can be restored by placing the cereal in a shallow pan in the oven. Then heat it at 350°F for a few minutes, leaving the oven door open a little bit.

Exercises (034):

1. Why must fine-grained cereals be combined with cold water during preparation?

2. State the preparation techniques for whole grain cereals.

035. Describe eggs in terms of size, quality, and preparation.

Eggs are considered to be almost a complete food. They are rich in proteins, fats, and vitamins. Proper preparation is necessary to prevent the loss of these nutrients.

Eggs. They range in size from jumbo to small and grades from AA to C. The Air Force normally purchases grade A medium eggs. They should always be kept at a 35°F temperature. A fresh egg of the best quality covers only a small area on the griddle. The yolk is upstanding, the white is large, thick, and stands firmly around the yolk. Poor quality eggs have yolks that are flat and break easily; the whites are thin and watery. Good quality, hard-cooked eggs show a well centered yellow yolk. Poor quality, hard-cooked eggs have an off-center yolk with a greenish tinge around the yolk edge.

In order to correctly cook with eggs, your success depends upon following these principles:

a. Break eggs separately in a dish in case one may be spoiled.

b. Always use even, moderate heat for cooking eggs. High temperature and long cooking periods toughen eggs and foods that contain eggs.

c. Never place eggs directly in hot mixture. First add some of the liquid from the recipe and blend it in with the beaten eggs, then beat the mixture in all at once.

d. Set eggs out at room temperature about one-half hour before preparation. This ensures some uniform cooking and prevents cracked shells when they are cooked in the shell. It produces an increased volume of air into the beaten egg whites.

e. Beaten egg whites are extremely important when making certain desserts that require a high, foamy texture. The air incorporated into these whipped eggs can break down easily. Therefore, always use a light over and under motion when you fold egg whites into the mixtures.

f. When slicing hard-cooked eggs, dip the knife in cold water and the yolk will not crumble.

g. Hard-cooked eggs should be set in cold water immediately to stop the cooking process and to keep the yolks from discoloring.

Exercises (035):

1. What is the range of egg size?

2. Describe how a quality fresh egg looks after having been cracked.

3. Why are hard-cooked eggs set in cold water after cooking?

036. State how heat affects cheese and margarine and list the kinds of milk processed in the Air Force.

Milk, butter, margarine, and cheese are the main dairy products used in the Air Force dining halls.

Cheese. Young unripened cheeses, such as cottage cheese and cream cheese, are very bland in flavor and very soft. Cured cheeses, such as cheddar cheese, may be aged from a few weeks to several years before they reach their full flavor. The longer cheese is cured, the sharper the flavor.

Store all cheeses in either a tightly covered container or wrap in wax paper or plastic wrap in the refrigerator. If mold forms on cheese, remove it before the cheese is served or used in cooking. Use low temperatures when cooking with cheese. High heat or prolonged cooking toughens the protein and causes the product to become stringy. When using cheese as a topping for casseroles, sandwiches, or vegetables, add the cheese when the product is just about done, and then cook the product just long enough to melt and brown the cheese. When grating cheese, chill it beforehand, this prevents it from falling apart during the grating process.

Milk. There are six kinds of processed milk used. They are: (1) fresh, (2) canned, (3) concentrated, (4) evaporated, (5) condensed, and (6) powdered, nonfat and powdered whole milk. Most of the recipes in AFM 146–12 call for powdered, nonfat, dry milk. Powdered milk sours the same as fresh milk when it has been reconstituted. After reconstitution, cover the milk, and refrigerate it until the milk is used. AFM 146–12 gives the proper amount of water to be mixed with powdered milk. If fresh milk must be used, replace the amount of water with the same amount of fresh milk. When cooking any product that contains milk, never allow the product to boil as it causes the milk to curdle.

Butter and margarine. They both have an equal amount of calories and are used in many Air Force recipes, especially in the preparation of pastries and sauces and for seasoning vegetables. When cooking with butter or margarine, take care to avoid scorching it since this destroys it's flavor and vitamin content.

Exercises (036):

1. How does high heat when cooking affect cheese?

2. List the six kinds of processed milk used in the Air Force.

3. How does scorching affect butter and margarine?

3-11. Salads, Salad Dressings, and Beverages

Be it a chef's salad to a simple cole slaw, salads and their dressings are a part of every meal. The chilled, crisp flavor and the bright array of color invite the diner to enjoy the

meal. Beverages are such standard drinks as tea, coffee, cocoa, and fruit juice. All have their place in the Air Force menu.

037. State the preparation procedures for salads and name the types of dressings.

Preparation of Salads. The cardinal rule for all salads is that the ingredients must be fresh. Naturally frozen or hot salads are prepared in advance. Salad greens should be torn, not cut, into bite-size pieces. All other vegetables should be sliced, diced, or chopped. Always store vegetables in separate containers until you are ready to use them. You may have to set them in ice for a brief time in order to restore their crispness. Like salad greens, lettuce should never be marinated because it wilts. AFM 146–12 contains many recipes for preparation of hot salads, molded salads (gelatin), and vegetable salads. Always consult the recipe card when preparing any salad.

Preparation of Salad Dressings. There are four basic types of salad dressings: (1) French, (2) cream, (3) mayonnaise, and (4) cooked. All other dressings are variations of these few types. Most salad dressings can be made in quantity and should be stored in the refrigerator. AFM 146–12 has a section devoted to salad dressings. You should consult these recipes for the preparation of salad dressings.

Exercises (037):

1. Why should lettuce or salad greens never be marinated?

2. How should vegetables be reduced to bite-size pieces?

3. What are the four basic types of salad dressings?

038. List the methods of brewing coffee and state the preparation for frozen concentrates.

Coffee. There are three basic methods for brewing coffee. They are: (1) percolator, (2) drip or urn, and (3) vacuum. Remember, coffee pots must be clean in order to ensure a good taste. AFM 146–12 contains the recipes for each method.

Tea. The brewing of tea is similar to that of coffee. The difference is in the proportions of tea and water and in the steeping process. In most dining halls the individual customers prepare their own cups of tea.

Fruit Drinks. The types of fruit drinks used in the dining hall are canned, frozen concentrated, and powdered. Chill canned fruit drinks before serving. Thaw frozen concentrated fruit drinks before preparation. Always follow the directions on the container when preparing these drinks.

Exercises (038):

1. List the three methods for brewing coffee.

2. What should you do before preparing frozen concentrated fruit drinks?

3-12. Sandwich Preparation

Many times our customers using the dining facilities want something light and not a full course meal. The sandwich fills that void. Sandwiches are popular and require little or no time to prepare.

039. State how to properly prepare a sandwich.

All bases have sandwich bars in their dining facilities, usually located on the short order serving line. These sandwiches can either be served hot or cold and are always made to order. Since sandwiches are also used in flight feeding meals they are very versatile. In this text we are concerned with sandwich preparation on the short order line.

Sandwiches are always very popular and usually aren't difficult to prepare. When preparing a sandwich there are four components (1) fillings (2) breads, (3) the method of preparation and (4) the garnish.

Lets look at the fillings which usually are either hot or cold. It can consist of peanut butter and jelly, cold cuts, cooked meats, seafood, cheese or canned processed meat such as tuna or chicken salad. Sandwich bars are set up to provide a variety of choices for the consumer. Always made to order the sandwiches can be open faced, closed, grilled or whatever the consumer desires.

It should be noted that perishable spreads and fillings must be kept at the proper temperature. Also, only the freshest and highest quality products should be used in sandwich preparation.

The breads used as the foundation of the sandwich vary in types. Usually the standards are white, wheat, rye or pumpernickle. The types can be sandwich, pullman burger, coney or steak bunsor rolls. The major thing is that they be fresh. Usually the bread is moistened with butter, salad dressing, mustard, catsup, or various types of sandwich spread. An example would be thousand island dressing on pumpernickle for a grilled Reuben sandwich.

The method of preparation is also intricate in the preparation of a sandwich. Usually the preparation of cold sandwiches aren't that difficult to complete. However, hot sandwiches can entail some work and preparation. A french toasted or monte carlo sandwich entailes dipping the

sandwich in egg and milk and sometimes bread crumbs and deep-fat fried is a good example. The types of sandwichs are numerous and are covered in more detail in CDC 62250.

Lastly, the garnish for a sandwich is important. Many times you could say that the garnish is the finishing touch to a master piece. An example of self-garnishing would be, lettuce leaves, sliced tomato and onion on a cheese burger or chopped onions shredded cheese and chili on a coney dog. Eye appealing as well as appetite stimulating is the goal of garnishing a sandwich.

Garnishes are usually edible. Sliced dill pickle with potato salad accompanying a grilled reuben on rye is an excellent example of an edible garnish.

The sky is the limit as far as garnishing sandwiches goes, only limited to the apprentice food service specialist imagination.

AFM 146–12, *Armed Forces Recipes*, provides a number of sandwich recipes which can be utilized to provide a varied selection of sandwiches. Preparing a sandwich is more than just slapping a filler and two pieces of bread together. Its a master craftsperson creating a masterpiece.

Exercises (039):

1. What are the four basic components of a sandwich?

2. Where can you find a source for a variety of recipes for sandwich preparation.

3. Which component of a sandwich preparation is considered the foundation?

4. List some items that are used as moistening agents in sandwiches to prevent them from drying out.

3-13. Increasing/Decreasing Standardized Recipes

As an apprentice food service specialist you will be involved in many important activities in food production. One of your most effective tools is the "Standardized Recipe."

040. State the purpose of standardized recipes.

AFM 146–12, Volume 1, *Armed Forces Recipes*, assures consistent quality for produced menu items. If used as required the recipe cards will also control production as well as supply information for predicting food costs. The purpose of standardized recipes cards is to provide brief, concise instructions to assure the preparation of consistent-quality food items.

The Armed Forces Recipe service consists of an elaborate set of standardized recipes designed to feed 100 people. Figure 3-1 is an example of a standardized recipe card index section for easy reference The general information section, preceding major food sections, provides valuable information about abbreviations, equivalent weight and measures (eggs. milk, etc) measuring procedures, and terms used in food preparation.

Each recipe (fig. 3-2) provides valuable information. There are six specific areas: (1) title, (2) identifier, (3) yield, (4) size of portion, (5) ingredients and amounts and (6) brief and clear instructions.

Exercises (040):

1. What is the purpose of the standardized recipe?

2. How many people is a standardized recipe designed to feed?

3. Where would you look to reference a recipe card?

4. List the six specific areas of a recipe card.

041. Cite the factors involved in recipe adjustment.

There are several reasons for adjusting a recipe. One is to adjust the recipe yield. An example being from 100 to 150 or from 100 to 40 portions. Another reason for adjustment is to use a specific amount of an ingredient already available such as 15 pounds of leftover roast beef and lastly to produce a specific number of smaller or larger portions.

To convert recipes you should change the amounts of ingredients from pounds and ounces to decimals. An example being changing 2½ pounds to 2.5 pounds. There is a conversion chart in the "A General Information" section of AFM 146–12, card number 1 (1). In your five level CDC we will go in to more depth in developing the formulas for recipe adjustment.

Exercises (041):

1. List the three circumstances when you may have to adjust a recipes.

L. MEAT, FISH AND POULTRY No. 26

BARBECUED BEEF (SLOPPY JOE)

YIELD: 100 Portions — EACH PORTION: ½Cup plus 1 Sandwich Bun

INGREDIENTS	WEIGHTS	MEASURES		METHOD
Beef, boneless, ground	30 lb			1. Brown beef in its own fat in steam-jacketed kettle or roasting pan. Drain or skim off excess fat during cooking period.
Onions, dry, chopped	5 lb 6 oz	4 qt		2. Combine ingredients; add to beef and stir to mix well.
Catsup, tomato	7 lb 2 oz	3 qt (1-No. 10 cn)		3. Cover; simmer 30 minutes.
Mustard, prepared	1 lb	2 cups		
Salt	8 oz	3/4 cup		
Sugar, brown	12 oz	2 cups		
Vinegar		3 cups		

508707-2

Figure 3-1. Standard recipe index card.

CH—2

INDEX-CARD

50870/A1-82

Figure 3-2. Standard recipe card.

2. To convert recipes what must be done?

3. Where can you obtain information recipe conversion?

3-14. Waste Prevention Measures

Waste prevention in food service is very important. Conservation of food means economy, savings, wise use of material and equipment, and the prevention of waste.

Air Force food conservation, however, is not intended to mean that food is saved at the cost of proper nutrition in the airman's daily diet. It is intended that wise use be made of all food that is bought, that it can be prepared in the best way to conserve its full nutritive value, and that it is served in such a way it is consumed and not wasted.

042. Cite the factors that emphasize good, controlled waste-prevention measures.

Waste prevention in food service is the job of each and every individual in the Armed Forces. This responsibility will not or cannot be delegated to any one else. Each of us must do our part. In the long run, each of us will profit if conservation is practiced; each will suffer if food is wasted or not used wisely. Basic control or waste or conservation originates with the persons responsible for receiving, handling, and preparing food to be eaten. When food is received at the dining facility, it should be examined carefully. All items should be in good condition. If any item is partially bad, salvage the good portions so that they may be used. Make a careful check of weights, count, and allowance of items received to guarantee that the dining facility is receiving the food to which it is entitled. Properly store all food to make sure it remains in good condition until used.

In quality food service production the most important factor is establishing a waste-control program. The improper handling of food can increase its cost, lower its quality, and increase waste. Poor preparation is a major cause of food waste. However, this can be eliminated by occasionally checking all areas of food production and service. Also, food studies assist in pinpointing problem areas in food production. Watch for plate waste and evaluate serving portions and appearance of food. Observe progressive cooking, or cooking as needed methods. This provides adequate portions and keeps leftovers to a minimum.

Exercises (042):

1. What is the most important factor in quality food production?

2. What is a major cause of food waste.

3. List the ways food waste due to poor preparation can be eliminated.

3-15. Progressive Cooking

For years the military as well as large and small commercial food outlets have been using batch cooking, better known as progressive cooking. The ultimate goal of progressive cooking is to provide customers with appetizing and freshly cooked food items as needed.

043. Define the term progressive cooking and list the advantages of it.

Progressive or batchcooking is when you cook only small portions of food to coincide with serving intervals. Food is most appealing when it is served piping hot, naturally flavorsome, brightly colored and properly textured. This condition is due to proper planning by the dining facility supervisor, based on the head count or amount of people fed.

The main objective of the progressive cooking technique is to provide a freshly prepared product to the consumer, whether its at the beginning or end of the serving period.

As an apprentice food service specialist you'll learn to closely observe cooking times recorded on AF Form 662, Food Service Production Log, and the Armed Forces recipes. Prepare food in small batches as close to the meal serving time as possible. Do not prepare the complete meal before the serving line is open.

Progressive cooking assures that:

a. Food nutrients are conserved.
b. Fresh food is available continuously.
c. The bulk of the food is available when needed.
d. Leftovers are reduced to a minimum.

Exercises (043):

1. Define the term progressive cooking.

2. What is the main objective of progressive cooking?

3. List four advantages of progressive cooking.

3-16. Quality of Taste and Garnishing

Members of the Air Force come from all types of environments. Likewise, their taste for food items is as varied as their backgrounds. Each member is accustomed to the taste of the particular flavor of the foods from home.

At this stage of your service, you have eaten many meals in Air Force dining halls. Some of the foods were good, according to your taste, and others were flat or tasteless. You may have decided that the cook should have been assigned to another career field. Several factors could have caused you to have this reaction. The cook may not have cared and placed the food on the serving line without seasoning.

Two other reasons which were more likely the cause are failure to taste the food before serving or seasoning to one's own taste. A good cook should consider both factors. The major problem of seasoning to your own taste is covered in AFM 146-12.

044. State the source for guidelines in preparing acceptable dishes and state the method of determining if a finished food product is acceptable.

Preparing Acceptable dishes. The Armed Forces Recipe Service (AFM 146–12) is designed to ensure that all foods served are standard in taste and appearance. These recipes are set up to hit a happy medium that ensures acceptance by each individual. This recipe service contains the largest variety of food items in print for one publication. Any item that appears on the AF Form 662, Food Service Production Log, can be found in AFM 146–12.

This leaves only one other area which requires your attention. It is the most important step in food production. You must test the completed product] Even though you follow each step of the recipe, things can still go wrong. The taste test is the only way to determine if a product is acceptable.

This is a very simple procedure to complete. You use a separate spoon for each item you are required to taste. If an item must be tested again use another clean spoon. Never use the same spoon twice when tasting] Experience tells you how each different food item is supposed to taste. If you prepare a food item you do not personally care for, have someone else taste the finished product. Once you are sure the product is acceptable, return the spoons for cleaning.

Remember that many advancements have been made in the Food Service Career Field, but the only method to ensure quality is taste!

Exercises (044):

1. What directive contains recipes of foods that are standard in taste and appearance?
2. What method or test is used to determine if a food product is acceptable?

045. Define "garnish" and name types of garnishes.

Preparing of Attractive Dishes. Garnish is primarily a decoration added to food. Although designed primarily to improve appearance, in most cases, it also adds food value. The science of garnishing when mastered by a cook raises the cook out of the run-of-the-mill class to a culinary position of esteem.

Food must appeal to the appetite, and food that has an attractive appearance is always the most satisfying. The appetite may be stimulated, or a very common dish made appetizing, by the use of a garnish that offers the interest of color and design.

Listed below are some practical guides to effective food garnishing:

- Use restraint in garnishing. Keep a picture of the whole meal in mind.
- Don't get carried away trying to add a garnish to every food item.
- Vary food garnishes.
- Don't let garnishes become monotonous by leaning too heavily on the well-worn parsley spring, sliced stuffed olive, and maraschino cherries.
- Plan garnishes ahead.
- Plan simple garnishes.
- Don't sacrifice timely preparation for the sake of garnishing.
- Don't rely too frequently on food coloring to supply color contrast.

There are many food items that can be used for garnishing. Examples may be found in AFM 146–12.

Exercises (045):

1. Define the word garnish.
2. What are commonly used garnishes?

3-17. Basic Serving Rules and Procedures

Basic serving rules and techniques that we will cover in this section include: placing food in the serving counters,

carving individual servings of meat and poultry, and serving proper portions of food.

046. State rules to follow when placing food on the serving line.

Food Display. Most people eat first with their eyes. Of course, they don't bite or chew with them, but they do accept or reject food items on the serving line. This is a human trait that we, as food service people, cannot afford to ignore. If a person can't accept the appearance of food, you have a poor chance of getting that person to eat it.

There is a cardinal principle that you must observe when displaying food on the serving line—food must be arranged, not deposited. In the arrangement of food, the main idea is to get the hot food on the plate last so that it won't get cold. The order of placing food on the serving line varies slightly from meal to meal. The following lineup is considered standard: salad, bread and butter, dessert, vegetables, potatoes, meat, gravy, soup, and hot drinks.

When setting up the serving line your shift leader or supervisor should have a detailed plan of operation and follow it through. It is the shift leader's or supervisor's responsibility to see that things run smoothly throughout the serving period. It is to your advantage to observe the technique that your supervisor uses in setting up the serving line because some day you will be called on to perform this function.

Exercises (046):

1. In the arrangement of food, the main idea is to get the hot food on the plate last. Why?

2. What is the essential principle that you must observe when displaying food on the serving line?

047. State procedures involved in carving meat and poultry for individual servings.

Carving Meat and Poultry. The sight of a person carving a roast or ham on the serving line is more attractive than seeing the meat item already sliced in a serving tray. Even though the slicing machine has advantages, such as speed and uniformity in slices, carving the meat on the serving line also has many advantages. The meat portions have more natural juices, all edible portions of the meat can be served, carving the meat stimulates the customer's appetite and manpower is saved by the carver acting as a server.

Knowing the direction in which the muscles run is essential, because in slicing a roast you should cut across the grain when possible. This shortens the fibers and makes a more desirable serving. The shorter the fiber, the easier it is the chew the meat. You, as a carver, should learn to carve neatly without scattering bits and pieces of meat all over the place. Also, take care to ensure that all customers receive the same amount of meat. If the carving is done correctly, the portion of the roast which has not been cut is attractive, not jagged and rough. The five steps in carving a roast or canned ham are as follows:

(1) Gather all equipment necessary to carve. This includes a carving knife, carving fork, butcher steel, and cutting board.

(2) Place the roast or ham on the cutting board.

(3) Stick a carving fork 3 to 4 inches from the edge to be cut. Hold the roast firmly so that it does not slide.

(4) Hold the carving knife firmly in your hand. Start at the heel of the blade on the opposite side of the roast. Make long strokes the entire length of the blade toward you, making sure that you always carve cross the grain.

(5) After each slice is carved, lift it on the blade of the knife, steadied with the fork, and place it on the plate of the consumer. (NOTE: Place every fourth or fifth slice on a meat scale to ensure portion size accuracy.)

Unlike other meats, it is best to carve poultry in the kitchen before serving. When carving poultry, place the bird breast side up on the cutting board. Remove the leg and thigh first. To remove it, hold the end of the leg bone in your fingers and gently pull the drumstick away from the body. Cut through the skin and meat between the thigh and the body. Cut through the joint that joins the thigh and the backbone. Separate the drumstick from the thighs at the joint. Slice the meat from the drumstick and thigh. Remove the wing in the same way as you did the leg. To slice the breast meat, begin at the front about halfway up the breast. Cut the slices until enough meat has been carved for the first servings or until you reach the breast bone. When one side of the bird has been carved, begin on the other side and repeat the process. Remember, to become proficient in carving takes a lot of experience.

Exercises (047):

1. When carving meat, why should the carver cut across the grain?

2. When carving poultry, how should you place the bird?

3. Listed below are the steps used in carving a roast or ham. Rearrange the steps in proper sequence by placing 1, 2, 3, 4, or 5 in the space in front of the steps.

   _____ a. Stick a carving fork 3 to 4 inches from the edge to be cut.

   _____ b. After the slice is carved, place it on the plate of the consumer.

   _____ c. Place the roast or ham on the cutting board.

_____d. Gather all equipment necessary to carve.
_____e. Holding the carving knife firmly in your hand, make long strokes the entire length of the blade toward you.

048. State whether given procedures are the proper rules to follow when serving individual portions of specific food items.

Serving Techniques. In the following paragraph, we discuss serving techniques as they apply to specific food items.

When serving baked or oven-browned foods, such as au gratin vegetables, scalloped products, macaroni and cheese, baked puddings, and baked beans, you should try to serve a portion of the browned surface to each diner if at all possible.

When serving potpies and cobblers, serve a proportionate share of both filler and crust.

When serving soups, other than broth or bouillon, stir frequently during the serving process to ensure that each diner gets a proportionate share of the solid ingredients and the liquid. To avoid spilling when serving soup or chowder, half fill the serving ladle and fill the diner's bowl only to about two-thirds of its capacity.

When serving gravy, sauce, or syrup to an individual, give a "good," but not excessive amount.

Don't place one food over another unless it is intended to be served that way. For example, gravies for meats are intended to be served over the meat or the potatoes; sauces for vegetables are served over the vegetables. A good server always asks the diner where to place this gravy or sauce.

Don't force an item of food on a customer if the person doesn't want it. Serve food portions according to menu specifications and the desires of the consumer. For example, if the menu specifies two pork chops for each diner and an individual desires only one, don't force the other one on the person. However, don't serve more than the menu specifies.

Exercises (048):

1. How should baked or browned foods be served?

2. What should a good server ask a diner when serving gravy or a sauce?

3. How should food portions be served to the customer?

Baking Fundamentals and Productions of Pastry

THIS CHAPTER deals with the basics of baking terminology, the functions of ingredients used to produce pastry products, and the actual production of pastry. Good pastry is never an accident. It is the result of the baker's knowledge of baking. This includes each phase of the baking operation from the basic ingredient to the finished product. This chapter is not designed to teach you the entire operation of baking. Instead, it provides you with the knowledge you need to begin baking pastries and sweet doughs in the Air Force. This chapter along with your duties will get you started in baking.

It is up to you with the help of your supervisor to learn as much as possible about baking. You can do this only by working with pastry products.

4-1. Baking Terms and Ingredients

In the process of your normal duty day you hear various terms that apply to the production of sweet rolls and pastry. The following paragraphs identify some of these terms.

Each ingredient used in the production pastry items has its own function. Some act as binders or structure builders, while others give volume, add color, sweeten, or give moisture and palatability to the product. Other ingredients tend to enhance freshness, to tenderize, or to leaven.

049. Identify definitions of terms used in baking.

Definitions. Words do not always mean what you think they mean when hearing them. You must recognize what you are doing and associate the word with the job. For instance, what would happen if you told a dishwasher to wash a pie. What would happen if you told a maid to dust a piece of dough? Would these people know what you wanted them to do? Probably not. But pies are washed and dough is dusted.

Wash. This is a liquid brushed on the surface of an unbaked product, usually a pie, to give it a golden brown color when it is baked. The liquid may be water, milk, thin syrup, eggs, or a combination of these items.

Dust. To dust a baking product, distribute a film of flour to prevent dough from sticking on a worktable or piece of equipment. Dough is dusted to prevent it from sticking to the rolling pin or the table. The flour used for dusting is either hard wheat flour or bread flour.

Dough. This is a mixture of combined ingredients for piecrust, cookies, sweet rolls, etc., stiff enough to be kneaded.

Knead. To knead is to shape or form dough. This is done by working the dough with the hands as if massaging.

Cake. This is a leavened and shortened sweet product containing flour, sugar, salt, eggs, milk, liquid, flavoring, shortening, and some type of leavening agent. Most cakes used in Air Force bakeries are prepackaged and require only the addition of eggs, flour, or water.

Batter. This is a mixture of combined ingredients such as flour, sugar, eggs, and milk, thin enough to be dropped from a pastry bag, a spoon, or by hand. This includes cake batter, cookie batter, brownie batter, etc.

Pie. A dessert with a crust bottom; fruit, cream, or custard filling; and meringue, whipped cream, or crust top.

Ice. To apply frosting.

Glaze. This is a thin, sugar-water mixture or a cooked syrup used to put a shiny finish on pastry items, usually sweet rolls.

Frosting. Frosting is a mixture of sugar and other ingredients, such as shortening, egg whites, and flavoring used to finish and decorate cakes.

Texture. Texture refers to the interior grain or structure of a baked product as shown by a cut surface or by the feeling of a substance under the fingers.

Bake. This means to cook by dry heat in a closed place. This is done in an oven.

Exercises (049):

1. Match the term in Column B with its proper definition in Column A.

Column A	*Column B*
_____ (1) A leavened or shortened sweet product.	a. Wash.
_____ (2) A dessert with a crust bottom, filling, top, or topping.	b. Dust.
_____ (3) Liquid brushed on an unbaked product.	c. Dough.
_____ (4) A mixture of combined ingredients stiff enough to be kneaded.	d. Cake.
_____ (5) Used to finish and decorate cakes.	e. Batter.
_____ (6) A mixture of combined ingredients thin enough to be dropped from a pastry bag or spoon or by hand.	f. Pie.
_____ (7) To shape with the hands.	g. Ice.
_____ (8) Distribute a film of flour.	h. Knead.
	i. Glaze.
	j. Frosting.

Column A	Column B
_____ (9)	A cooked syrup used to put a shiny finish on pastry items.
_____ (10)	To apply frosting.

050. Associate characteristics and functions of ingredients used in the production of pastry with a specific ingredient, and state the purpose or function of specific ingredients.

Flour. Flour is the chief structure builder in most cakes, pastries, and rolls. Its absorptive abilities allow the use of water, eggs, shortening, and milk in batters and doughs. The absorptive abilities of flour depend on the type of flour used. Hard-wheat flour is light and yellowish but becomes white with age. When bread flour is used in cake production, it is necessary to replace up to 10 percent of it with cornstarch.

Sugar. Sugar in some form is used in all pastry recipes. It is an important ingredient because sugar crystals have a cutting effect on flour proteins during mixing. The amounts and types of sugars used control such factors as sweetening, carmelization, moisture retention, and the outward spread of the various pastry products during the baking process. Various types of sugar and their functions follow.

Granulated sugar. Granulated sugar is used as a sweetener in cakes, yeast-raised products, pie fillings, and cookies. In yeast-raised products it also acts as a yeast food. In cookies, the size of the granule has a tendency to control the spread of the cookie. In pie fillings, sugar increases the palatability, body, and character of the filling. Granulated sugar acts as a tenderizer. It also has softening effects on the proteins of the flour and allows cakes and other pastries to be baked at lower temperatures because granulated sugar lowers the carmelization point of batters and doughs.

It also improves the keeping qualities of pastry items through its moisture-retaining abilities. In cakes, granulated sugar aids in obtaining volume because, during mixing, the crystals reduce air incorporated into the batter.

Powdered sugar. Powdered sugar is used primarily for frosting, but can be substituted for part or all of the granulated sugar in pastry recipes. When used in cake batters, the cake batter has a finer cell structure, but the liquid content of the batter has to be adjusted. In cookies, it produces a compact fine-grain interior, allowing the cookie a minimum amount of spread while baking.

Brown sugar. Brown sugar is used to obtain a certain flavor. When brown sugar is used in place of granulated sugar in cookies and cakes, you must use baking soda to adjust the acidity of the mix. The crystals are soft and dissolve completely during mixing. Therefore, it is necessary to make adjustments in recipes to obtain the required spread in cookies and the pliability in cake batters. You can substitute brown sugar for part or all of the granulated sugar in such pie fillings as apple, pumpkin, and sweet potato.

Molasses. Molasses is used in cake and cookie recipes to give these items a particular flavor. In pumpkin and sweet potato pies you can use it as part of the sugar content of filling. The color that molasses gives to cakes and cookies is largely dependent on grade, type, and quality, as with brown sugar recipes. In recipes containing molasses as an ingredient you must also adjust the recipe to compensate for the acidity and moisture differences.

Honey. Honey is used in pastry baked items to obtain a distinct flavor. It can be used in icing, glazes, pie fillings, cake batters, and yeast-raised sweet doughs. Honey gives cookies a chewy quality and aids in giving all pastry items a rich brown crust color.

Salt. Salt is used in pastries to prevent excessive sweetness and to intensify the natural flavor of other ingredients in the recipe.

In icings, salt acts as a stimulant to the taste buds and brings out pleasing tastes that would otherwise seem flat. When salt is used as an ingredient in baking, it enhances flavor even in such items as pie doughs, fillings, custards and puddings. In yeast-leavened sweet rolls it aids in the control of fermentation. Granulated table salt is best suited for pastry production and is the type normally issued for pastry kitchen use.

Shortening. Shortening used in the production of pastry is usually of the solid form. Liquid shortenings are not meant to be used in cake batters; however, their use is acceptable in yeast-raised doughs. Shortening improves the eating quality of cakes and other pastry items by improving their nutritional value and by making them soft, moist, and tender. Without shortening, pastries would be dry-compact, solid masses. When the gases from the baking powder and the air and moisture that are worked into the cake batter during mixing expand in the oven, the shortening acts as an internal lubricant to reduce internal friction and allows the expanding bubbles to slide past one another creating expansion and volume.

The use of shortening, in recipes that call for it, enhances the freshness of all pastry items. The proper type of shortening and the correct mixing operation create a uniform and stable emulsion that coats the batter and dough particles: thus, while baking, the film of fat retards the escape of moisture which causes baked items to stay fresh longer. In pie dough, shortening helps to make the crust tender and is responsible for its flakiness. The degree of tenderness and type of flake is largely dependent on how much shortening is used, to what degree it is blended with the flour, and how much it is mixed.

In cookies, shortening not only makes cookies soft, tender, and nutritious but also is responsible for the amount they spread outward during baking.

Eggs. In cakes, eggs provide moisture, flavor, and food value. Structure (the most important contribution of eggs to cake) is provided by egg protein coagulation during baking. In foam-type cakes, eggs are the primary leavening agent. When used in pies, such as custard and cream, eggs contribute quality, flavor, color, and also act as a thickening agent. In cookies, eggs both tenderize and toughen. The yolk of the egg is the tenderizer because of its fat content and the egg white is the toughening agent because of its protein (which coagulates during baking and acts as a structure builder). You can use whole eggs or just

the whites or yolks depending on the type of cookie you are making. Whole eggs contribute the combined characteristics of moisture, shorteness, and aeration in cookies. In yeast-leavened sweet doughs, eggs contribute nutritional value and wholesome flavor. By supporting the weight of the sugar and shortening, they prevent the product from being dense and heavy. For best results the weight of shortening and eggs should be about equal.

Milk Solids. Milk solids add favor, retain moisture, and aid in control of crust color in all pastry items. The solids of milk have a binding effect on flour proteins causing a slight toughness in the finished products. In pies, such as the cream, and custard types, milk solids add body, flavor, quality, and palatability to the fillings. All recipes in AFM 146–12 require nonfat dry milk.

Leaveners. The type of leavener to use is dependent on the type of item you are producing. Yeast is used in the production of cinnamon rolls, yeast-raised doughnuts, and Danish pastry. Baking powder is used in cake batters. Its function is to make these types of items rise in the oven while baking. Baking soda is used in cake batters that contain buttermilk, molasses, or sour milk to neutralize the acidity of these ingredients. When baking soda is used in devil's food cake, it produces the characteristic red color in the cell structure. The use of excessive amounts of baking soda results in a soapy taste in the finished product.

Exercises (050):

1. What is the chief structure builder in pastry products?

2. How does granulated sugar act on yeast-raised pastries?

3. How is powdered sugar primarily used?

4. What happens to crystals of brown sugar during mixing?

5. What type of sweeteners are used in cake and cookie recipes to give these items a particular flavor?

6. Which sweetener gives cookies a chewy quality and aids in giving all pastry items a rich brown crust color?

7. What is the purpose of salt in yeast-raised dough?

8. What ingredient in pie dough helps to make pie crust tender and is responsible for its flakiness?

9. What is an egg's most important contribution to cakes?

10. What baking ingredient aids in control of crust color in all pastry items?

11. The use of excessive amounts of what ingredient results in a soapy taste in the finished product?

4-2. Cakes

Instructions on how to mix a particular pastry item are usually contained on each recipe that is best suited for that particular mix. All ingredients in any type of bakery item should be carefully weighed. Too much of one ingredient and too little of another could result in an inferior product. Other aspects of cake making covered in this section include pan preparation, mixing, batter types, and baking practices.

051. Identify the types of scales used in an Air Force bakery and state ways to prepare pans for cakes.

Scales. One of the most important segments of pastry production is the act of weighing products before mixing. Two types of scales are used in the bakery to weigh ingredients. To weigh large amounts of items such as flour, sugar, and shortening, a heavy-duty scale is used. For items such as cinnamon, salt, and baking powder, a light, sensitive scale is used. Take care in weighing items accurately. Never weigh one item on top of another. This leads to faulty scaling.

Pan Preparation. When preparing pans for baking cakes, you must select pans that are not dented or warped. If a pan is warped, the cake batter runs to the low side and you have a cake that is thick on one side and thin on the other. If the pan is dented, it causes uneven baking. After you select your pans, you must prepare them so you can remove the cake after baking. There are four basic methods of preparing (greasing) pans for cake: (1) using a shortening and flour mixture, (2) using a salad oil and flour mixture, (3) lining the pan with wax paper, and (4) greasing the pan with shortening and dusting it with flour.

Exercises (051):

1. What are the two types of scales used in a bakery?

2. List the four ways you may prepare pans for cakes.

052. Name and distinguish between the types of cakes mixed in Air Force baking facilities.

Mixing. Mixing is the process by which all ingredients are evenly distributed throughout the mix to get the desired consistency. It is important to follow the instructions on the recipe for the mixing time and speed. If batter-type cake is mixed at high speed for too long a period of time, too much air is incorporated, causing it to fall during baking. Sufficient air is not incorporated when it is undermixed, resulting in a heavy cake. Angel food cake is not mixed in the same way as batter-type cakes because it is necessary to incorporate more air into the mix to get the desired volume.

Batter type. There are a number of ways to mix batter-type cakes, but the most preferred is the two-stage method. This method is simpler and less subject to error. When mixing a batter-type cake, there should be just enough batter in the mixing bowl to cover the paddle. After the cake is mixed, the batter should be between 72° and 78°F.

In the two-stage method of mixing cake batters, part of the ingredients are mixed in the first stage, and the other ingredients are added and mixed in during the second stage.

a. Stage 1. Sift all dry ingredients together twice. Place the dry ingredients, shortening, milk, and the main portion of water into the mixing bowl. To avoid splashing, mix at low speed until all ingredients are combined. Once the ingredients are blended, mix for 3 minutes at medium speed and then scrape the bowl down thoroughly.

b. Stage 2. Combine the eggs, remaining water, and flavoring and add them slowly to the ingredients already mixed in the bowl while mixing at low speed. After this has been done, stop your mixer (shut it off for the sake of safety), again scrape the bowl thoroughly, and then mix for 3 minutes at medium speed.

Angel food. When mixing angel food cake, you should not have enough batter in the mixing bowl to cover the wire whip. Too much batter in the mixing bowl could cause you to overmix it when adding the flour.

Angel food cake is prepared from egg whites, granulated sugar, salt, flavoring, cream of tartar, and flour. The egg whites should be fairly cool (approximately 70°F) for whipping. Before attempting to whip egg whites, you must the be sure that bowl and whip you use are free of any oil or grease. Should one of these utensils have a spot or streak of oil or grease on it, the egg whites will not whip. Place egg whites, salt, cream of tartar, and flavoring in the clean bowl and, with the clean whip, beat these ingredients until they are foamy. Add approximately one-half the granulated sugar (which must also be grease and oil-free) in a slow stream and beat to a wet peak. Do not beat egg whites to a dry peak, as this causes your cake to collapse in the oven while baking. To test for wet peaks, stop your mixer, dip your index finger into beaten egg whites, and get a small amount off the bowl. The properly beaten egg white mixture should form a peak and feel moist. Once the egg whites are properly beaten you gently fold in the flour and granulated sugar which have already been sifted together five times. Fold or mix only until the sifted flour and sugar are evenly distributed throughout the mix.

Exercises (052):

1. What are the two types of cakes mixed in an Air Force bakery?

2. In which type cake are the ingredients mixed in stages?

3. Which cake is prepared from egg whites, granulated sugar, salt, flavoring, cream of tartar, and flour?

053. State the technique used to check cakes for doneness.

Baking Cakes. To ensure consistent results in producing good-quality cakes, you must allow the ovens adequate time to preheat. By doing this first, you know the ovens are at the correct temperature when the item is ready to be baked. The cake batter must be scaled or measured into pans that have been properly prepared. Do not place pans too close to each other or to the sides of the oven. Space pans evenly so that the heat can circulate around each pan. To tell whether or not a cake is done, press in the top with your fingers (about 1/16 inch). If the cake springs back, it is done. But if your fingers leave an indentation or the cake sinks slightly, you should bake it a few minutes longer. After a cake is baked and removed from the oven, allow it to cool for about 10 minutes before removing it from the pan.

The following is a list of some cakes, their baking temperatures, and their baking times. You can see that all of these cakes are baked at the same temperature, but the length of time they are baked varies, depending on the size of cake made.

Angel Food	375°F	Loaf pan	30 minutes
Applesauce	375°F	Sheet pan	35–40 minutes
Yellow	375°F	Sheet pan	30–35 minutes
		9-inch pan	25–30 minutes
Chocolate	375°F	Sheet pan	30–35 minutes
		9-inch pan	25–30 minutes
Devil's Food	375°F	Sheet pan	30–35 minutes
		9-inch pan	25–30 minutes

Exercises (053):

1. What is the proper technique to use to check cakes for doneness?

2. How long should cakes cool before you remove them from the pan?

4-3. Cookies

Cookies make an excellent dessert when served with ice cream, fruit, or pudding. The two basic types of cookies are: (1) soft batter and (2) stiff batter. Almost all cookies are prepared using four basic ingredients: (1) flour, (2) sugar, (3) shortening, and (4) liquid (milk and/or eggs). The proportions of these ingredients determine whether the cookies are hard or soft.

054. State and distinguish between the types of cookie dough mixed in Air Force baking facilities.

Mixing. Generally, two methods are used for mixing cookies: (1) the one-stage method and (2) the two-stage method or creaming method. We will discuss the creaming method.

When mixing cookies by the creaming method, in the first stage add shortening, sugar, and salt to the mixing bowl and cream them together. The eggs are added in the second stages, scraping the bowl down after each stage. After doing this, add about half of the water and all of the dry ingredients (flour and baking powder). Mix this at low speed until you combine all ingredients and have formed a smooth dough. If the dough is not at the desired consistency, add small amounts of water until you reach the consistency you desire. When adding additional water, be careful not to mix the cookie dough for a prolonged period. Overmixing causes the cookie to be tough and spread very little while baking. "Makeup." Now that you have a soft- or stiff-batter cookie dough made, the next step is to prepare the cookies for baking.

Stiff batter. After you have put the stiff-batter cookie dough on the workbench for makeup, handle it as little as possible. Overworking the dough causes the finished product to be tough. For makeup take a large handful of dough and hand roll it to a diameter of approximately 3/4 inch. Cut the roll of cookie dough into pieces about 1 inch long. Now place the pieces of dough on a baking sheet and flatten. When placing a stiff-batter cookie on the baking sheet, always place the cut end of the cookie down. When you do this, the cookie is round when flattened (fig. 4-1).

Soft batter. Soft-batter cookies contain more moisture than stiff-batter cookies, and because of this extra moisture a spoon or pastry bag is used to drop them on a baking sheet. To keep the cookies uniform in size, extreme care must be taken when dropping them onto the baking sheet (fig. 4-2 and 4-3).

Exercises (054):

1. State the two types of cookie dough mixed in Air Force bakeries.

2. Which batter type should you place cut end down to give a round cookie shape?

055. State when you should remove cookies from the oven and ways of finishing cookies.

Baking Cookies. After you place the cookies on the baking sheet, they are ready for baking. Remember, you should always preheat the oven to the desired temperature before attempting to bake any pastry items. It is best to remove cookies from the oven slightly underbaked, because the heat retained in the pan finishes baking them. When cookies are overbaked they are dry and lose their flavor rapidly.

The following gives some cookie baking temperatures and times:

Peanut butter	375°F	14 minutes
Oatmeal	375°F	10 minutes
Sugar	400°F	10 minutes

Finishing Cookies. Icing cookies is not necessary, although it may add eye appeal. Before baking cookies you may garnish them with sugar, nuts, or raisins. You may ice cookies with different colored icing or use a white icing and dip in colored coconut.

Exercises (055):

1. When should you remove cookies from the oven?

2. What happens when cookies are overbaked?

3. List ways in which to finish cookies.

4-4. Pie Dough (Crust) and Pie Filling

This section discusses the types of pies, dough mixing, and rolling methods, panning, and pie filling preparation.

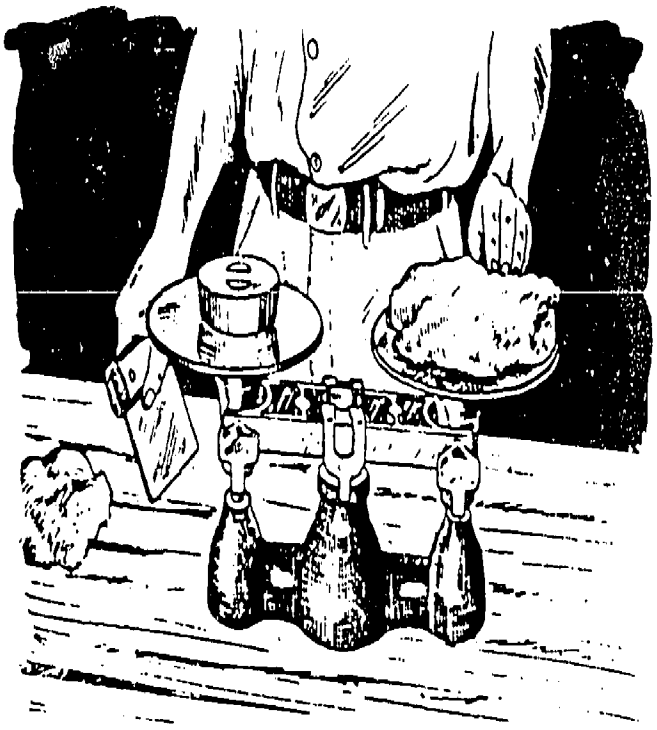

A. SCALE DOUGH

B ROLL DOUGH INTO CYLINDER

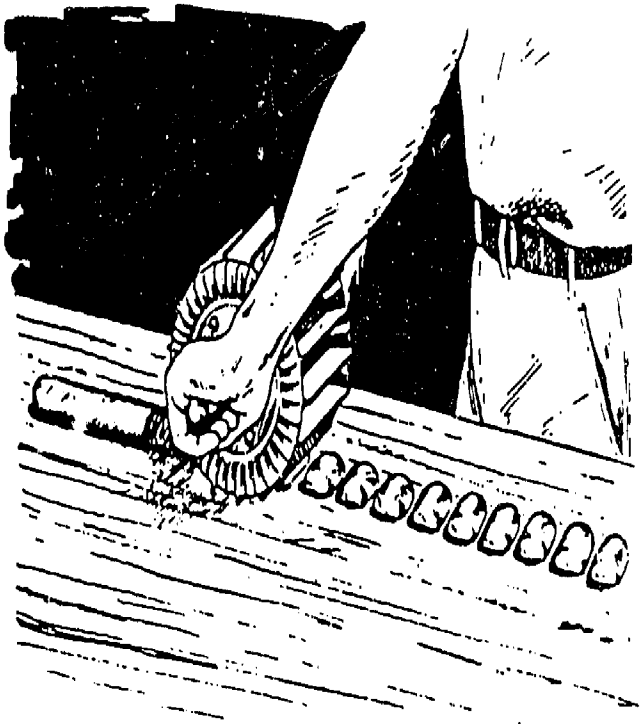

C. CUT CYLINDER INTO SMALL PIECES, EITHER WITH A SQUIRREL CAGE CUTTER OR BY HAND

D. PLACE PIECES ON BAKING SHEET AND FLATTEN

00913

Figure 4-1. Preparing cookies for baking.

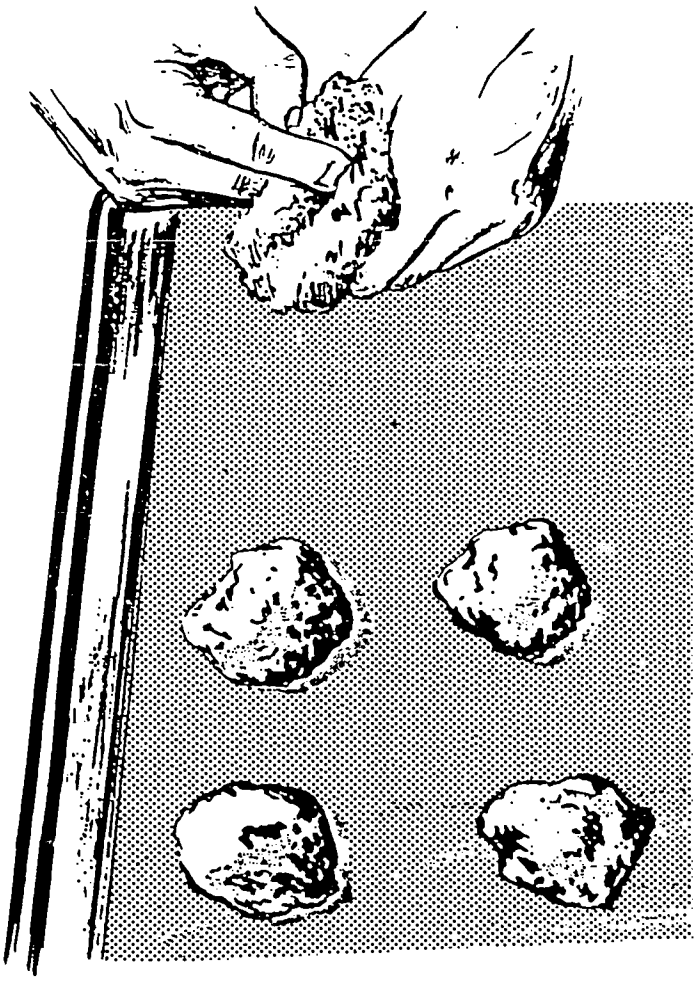

00914

Figure 4-2. Dropping cookies by hand.

056. Name the basic types of pies and state how they differ.

Types of Pies. A quality pie depends on two things (1) a proper filling and (2) a tender crust. Pies are of three basic types: (1) double-crust fruit pies, (2) single-crust custard pies, and (3) single-crust cream pies. When making double-crust fruit pies and single-crust cream pies, the raw filling is put into the pie shell and baked at the same time. When making single-crust cream pies, the crust is prebaked and the cream filling is cooked separately and put into the shell. Pies prepared in prebaked shells (cream pies) are often topped with meringue or whipped topping.

Exercises (056):

1. List the three basic types of pies.

2. Which type of pie has a prebaked crust?

3. Which type(s) of pie contains a raw filling?

057. State methods of mixing and rolling pie dough.

Pie Dough Mixing Method. Mixing pie dough correctly is very important because it is very easy to overmix. Overmixing pie dough causes it to be tough and rubbery. When making pie dough, it is best to use chilled ingredients. If this is not possible, use ice water. Put the ingredients (except water) into the mixing bowl and mix them until you obtain lumps about the size of marbles. Then add the water and mix this enough to form a dough.

Pie Dough Rolling Method. The next step in making pies is rolling the dough out to the desired diameter and thickness. There are two pie dough rolling methods: (1) hand rolling and (2) machine rolling.

Hand rolling. Take a piece of dough (approximately 8 ounces) and form it into the shape of a hamburger bun. Dust a small area of the workbench and place the piece of dough on the dusted area. Place the rolling pin in the center of the dough piece and roll back and forth until the dough is about 10 inches long. Turn dough piece over and at right angle to the first line of direction and roll until the dough piece is about 1/8 inch thick and large enough to fit the pie tin (fig. 4-4).

Machine rolling. Dough that is to be machine rolled should be firm. You should mix the dough in advance and chill it slightly. Before you machine roll the dough you must scale it into pieces weighing 8 ounces for bottom crust and 6 ounces for top crust. These pieces of dough also must be in the shape of a hamburger bun. Then dust the pieces of dough with hard-wheat flour and run through two sets of rollers, from which they emerge the desired thickness and diameter. A pie dough rolling machine is shown in figure 4-5.

Exercises (057):

1. How should you mix pie dough?

2. How much should the dough to be hand-rolled weigh?

3. The dough is rolled back and forth until it is how long?

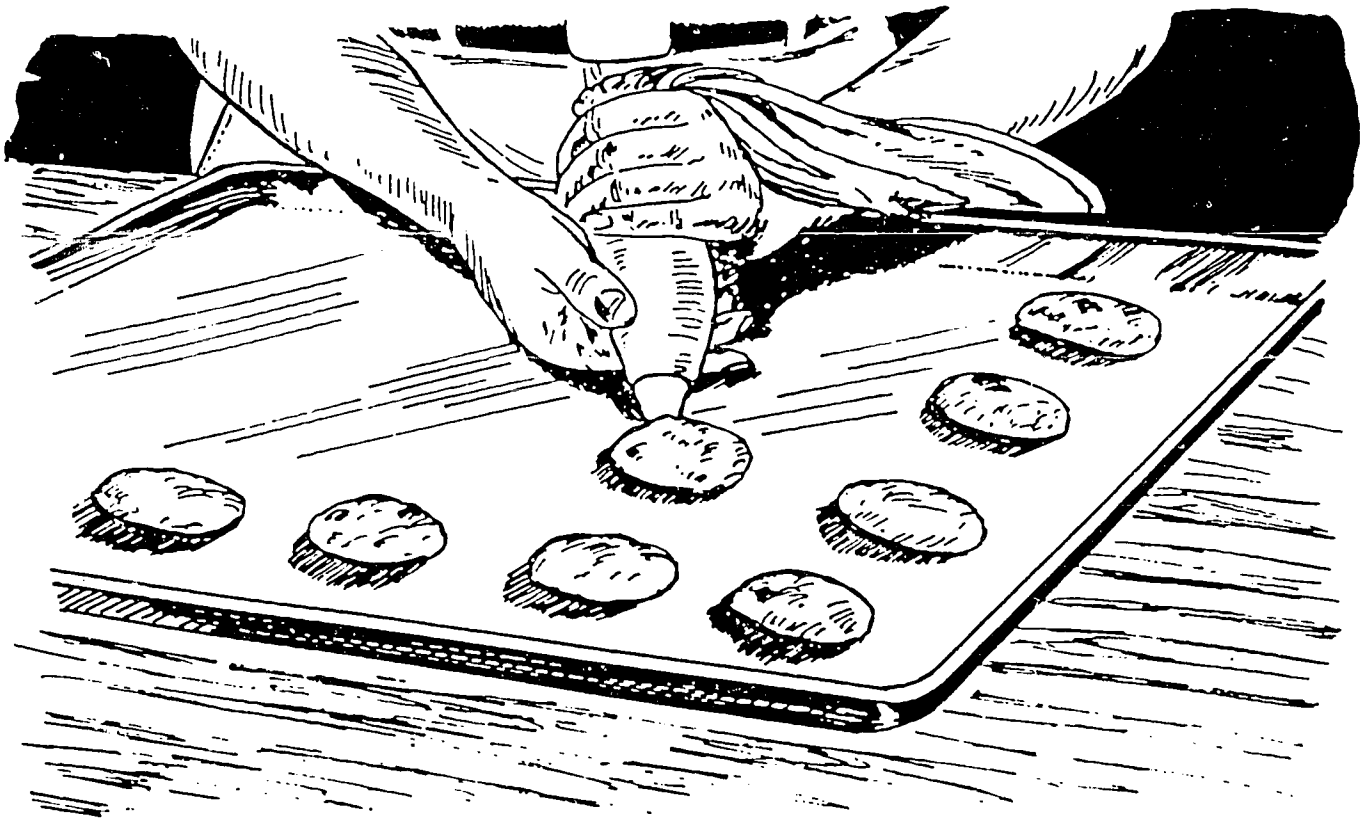

Figure 4-3. Dropping cookies with pastry bag.

00915

4. How thick should the rolled dough be?

5. Of what consistency should dough that is to be machine rolled be?

6. How much should the bottom crust of machine rolled dough weigh?

7. How much should the top crust weigh?

058. Identify procedures for panning double-crust pies.

Panning Double-Crust Pies. When you roll out the pie dough, handle it carefully (not stretched) and place it in clean ungreased pans.

Bottom crust. Now that you have rolled out the pie dough to the correct size and thickness, fold it in half to form a semicircle, and place it over one-half of a pie tin so that you have about 1 inch of pie dough hanging over the edge. Then, unfold the dough piece to cover the other side of the pan. When the pan is covered, air is likely under the dough piece. Gently remove the air by picking up the pan and tapping it on the table or use a piece of dough or your hand (palm) to press out the air. Now the pie shell is ready to be filled and covered with the top crust.

Top crust. Before filling the pie shell, wash the edge with water or a milk and egg mixture (fig. 4-6). This makes the top and bottom crust stick together and prevents the pie from boiling over during baking. After filling the pie (fig. 4-6), take one of the dough pieces for the top crust and roll it the same as the bottom piece. Fold it in half and make about six 1/2-inch cuts about 1/2-inch apart on the folded edge near the center (fig. 4-6). The purpose of the cuts in the top crust is to let steam escape from the pie filling during baking. Place the fold of the top crust as near the center of the pie as possible. Unfold the top crust to cover the exposed half of the pie filling (fig. 4-6). Press down around the rim of the pie with your hand so that the top and bottom stick together. To trim the edge of the pie, press the palms of your hands against the rim of the pie tin and turn

A. CUTTING DOUGH MASS INTO LARGE PIECES

B. ROLLING LARGE PIECE INTO A CYLINDER

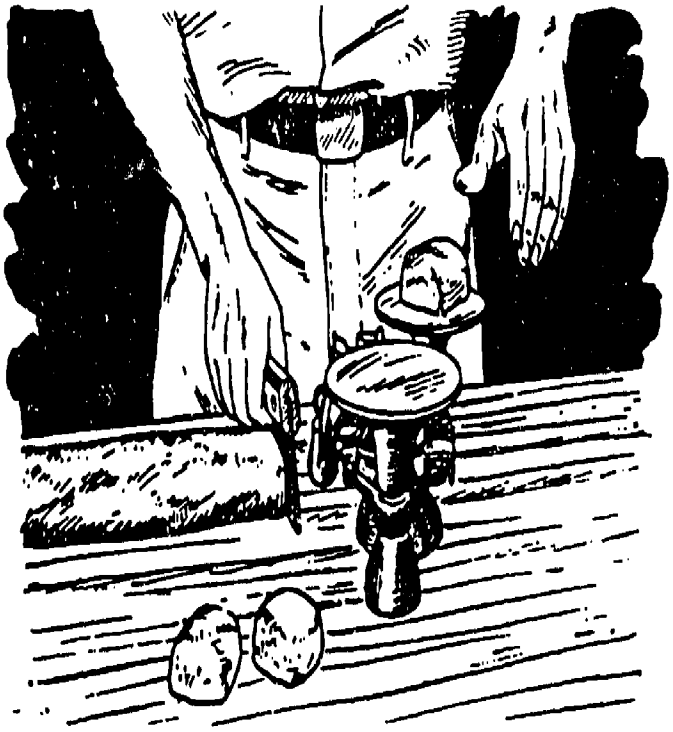

C. SCALING DOUGH

D. ROLLING DOUGH

00916

Figure 4-4. Pie dough rolling.

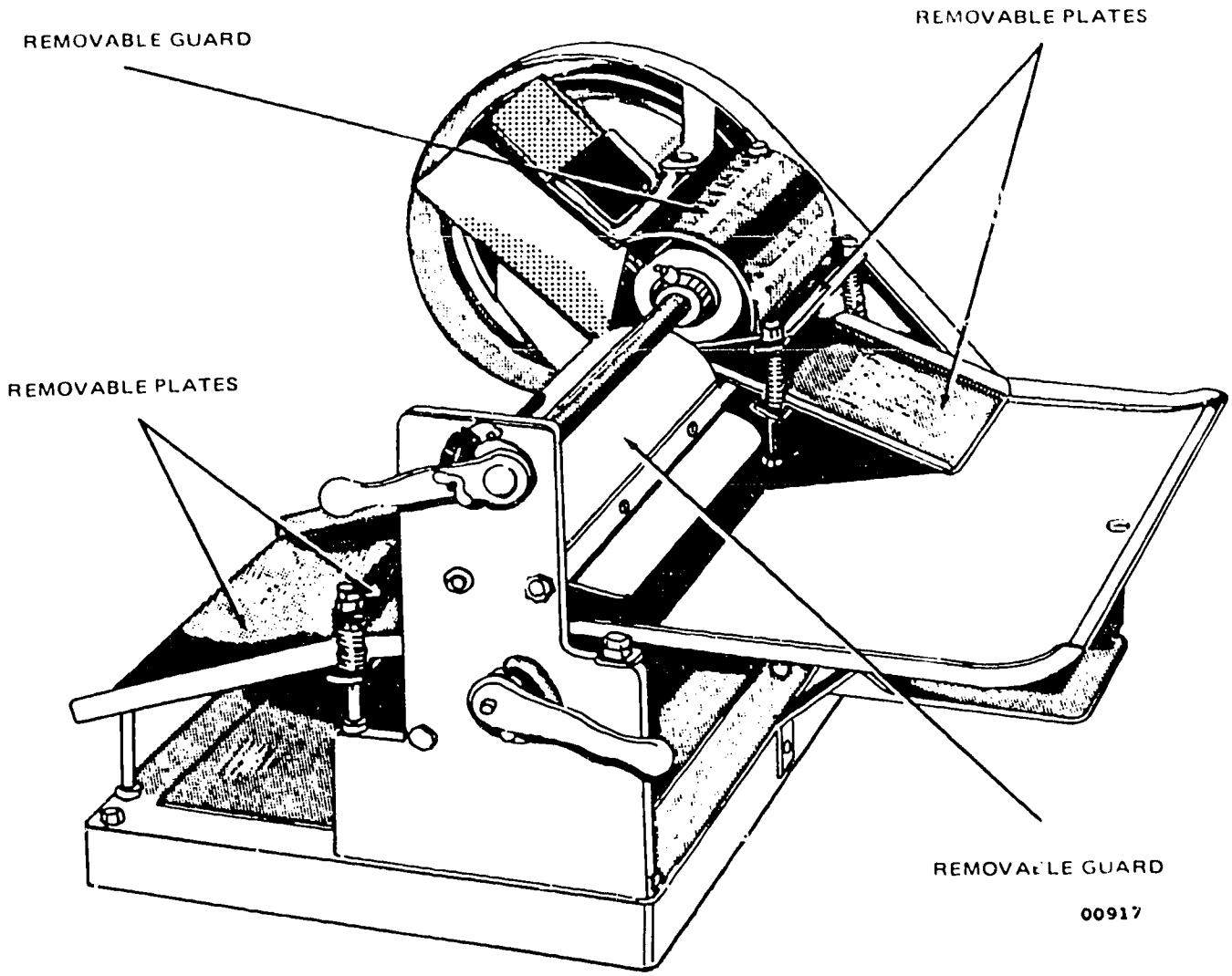

Figure 4-5. Pie dough rolling machine.

the pie until the excess dough is trimmed off (fig. 4-6). To give the pie a golden brown color, wash the top crust with a mixture of egg and milk or sugar, and water. You should not wash the outside edge of the pie because here the crust is thin and the wash can cause it to burn before the rest of the pie has finished baking.

Exercises (058):

1. What type of pans are double-crust pies placed in?

2. What should be done to the crust before filling a pie shell?

3. Why must the top crust of a double-crust pie have holes in it?

4. Why should the entire top of a double-crusted pie be washed with a sugar and water or milk and egg mixture?

059. State the methods of preparing pie filling, state which is the preferred method, and tell why.

Pie Filling Preparation. We have discussed how pie dough is mixed, rolled out, and placed in the pan and how

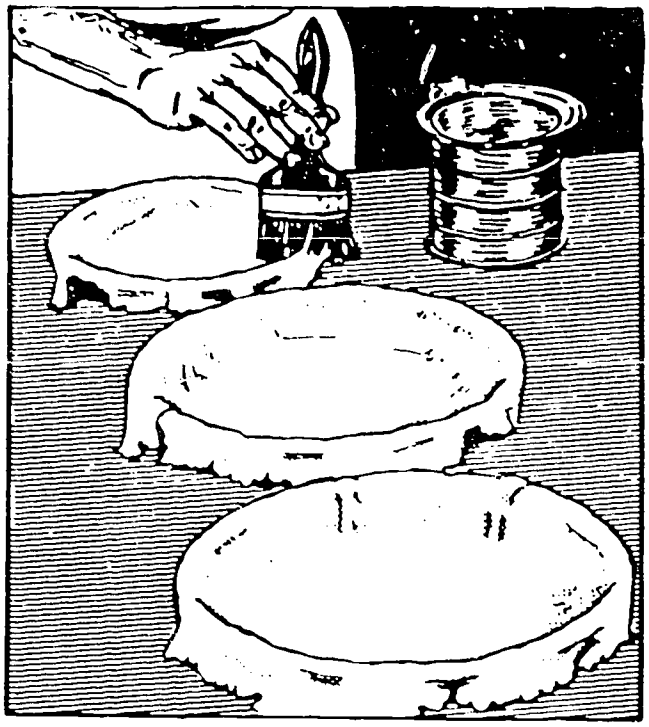

A. WASHING RIM OF BOTTOM CRUST

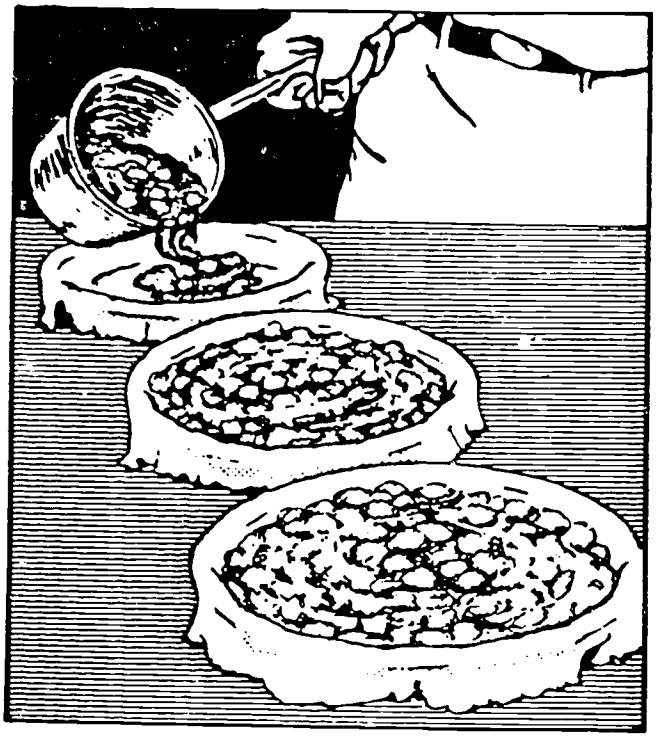

B. FILLING PIE SHELL WITH FRUIT

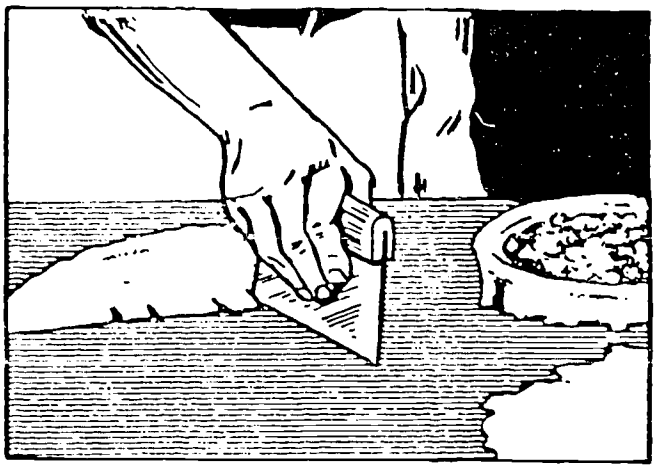

C. CUTTING TOP CRUST

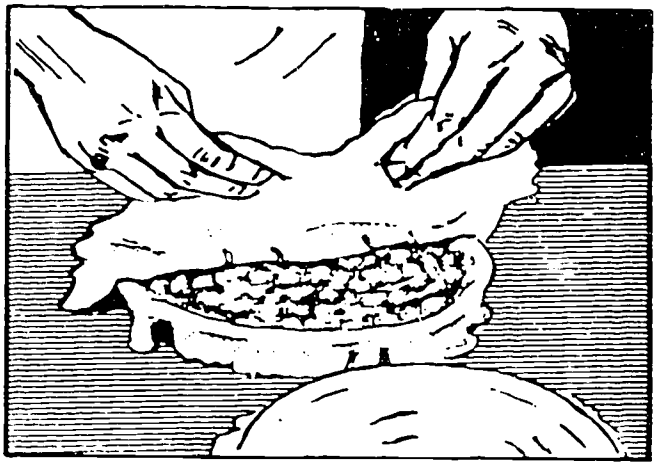

D. COVERING PIE WITH TOP CRUST

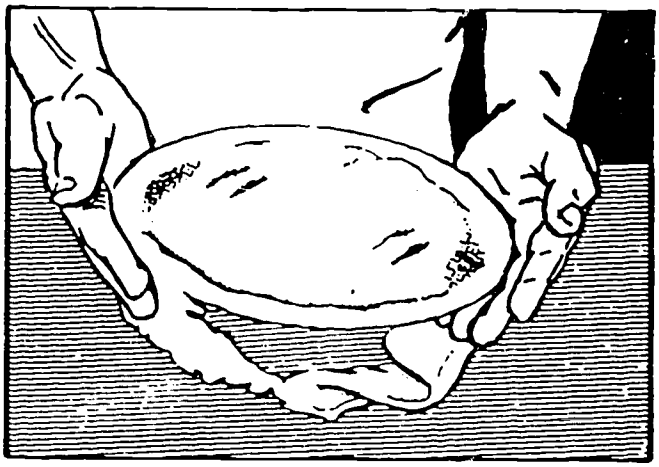

E. TRIMMING EXCESS DOUGH

00908

Figure 4-6. Panning double-crust pies.

to cover and trim pies. Now we will discuss how to prepare pie filling. You must take extreme care when preparing pie filling. Improper preparation can result in lumps of starch or a filling that is too thick or too thin.

When preparing cooked fruit filling with cornstarch as a thickening agent, prepare it in advance so that the filling cools before you place it in the pie shell. When pies are made with hot filling, wet or raw spots appear in the bottom crust. Also, fillings, if hot, boil out during baking. To prepare this type of filling follow these steps:

(1) Drain juice into steam kettle.

(2) Add water to juice if more liquid is required.

(3) Dissolve cornstarch in a portion of the liquid.

(4) Bring liquid in steam kettle to a boil.

(5) While stirring, add cornstarch mixture slowly, and continue cooking until thick and clear.

(6) Add sugar, salt, and other seasonings to hot mixture, and stir until dissolved.

(7) Pour cooked mixture over drained fruit and blend carefully so that fruits are not crushed.

When preparing filling using pregelatinized starch, follow these steps:

(1) Drain fruit.

(2) Add water to juice to obtain the required volume.

(3) Blend all ingredients (dry) in a bowl.

(4) Add juice gradually to dry ingredients and mix until smooth.

(5) Carefully fold drained fruit into thickened mix.

The use of pregelatinized starch has a number of advantages over cornstarch. A batch of filling can be prepared in minutes as opposed to hours required to cook and cool conventional fruit fillings. Since there is no cooking required, there is no loss through evaporation. Thus, you have 6 to 12 percent more filling.

Exercises (059):

1. What are two methods of preparing a pie filling?

2. Which is the preferred method. Why?

4-5. Yeast Dough

Items made from yeast dough are no more difficult than other types of pastry but require more time because of the necessity for fermentation and proofing. Once mixing has begun, the process cannot be interrupted without damage to the finished product.

060. State why you should avoid overmixing of sweet dough and why thorough mixing is necessary.

Mixing Yeast-Raised Dough. After you have accurately scaled and prepared the ingredients in the appropriate manner, you are ready to mix the ingredients into a dough. Thorough mixing of the dough is necessary to distribute the yeast cells throughout the dough, to distribute yeast food, to free the dough of ingredient lumps, and to form and develop the gluten. For the satisfactory development of gluten, all particles of flour must be thoroughly wet. Mixing brings moisture into contact with the gluten, forming proteins in the flour. As the mixing continues to be formed until a complete gluten network is developed in the dough. Avoid overmixing because the dough becomes very stickly and lacks elastic properties, thus producing an inferior product. The time and speed for mixing doughs are on the recipe card of the particular item being made.

Exercises (060):

1. Why is it necessary to mix the dough thoroughly?

2. Why should you avoid overmixing sweet dough?

061. Name the types of fermentation that take place during the fermentation of yeast doughs and state the primary purpose and characteristics of fermentation.

Fermentation. In the following paragraphs we discuss the fermentation and proofing of yeast-raised dough. Regardless of the type of yeast-raised dough being made, the fermentation and proofing process is the same, but the fermentation and proofing time may vary.

Fermentation starts immediately after yeast is put into the dough mixture. The chemical changes continue until the yeast is killed by the heat of the oven. As generally used, the fermentation period is the time between mixing and dividing the dough for makeup. Punching the dough is included in this period.

Leavening the dough is the primary purpose of fermentation. Leavening is the result of chemical action that creates carbon dioxide gas in the gluten network that expands and causes the whole dough mass to expand.

Maturing, or ripening the dough, is the secondary purpose of fermentation. This is the result of changes in the gluten which cause it to stretch more effectively. This secondary action makes the dough more spongy and results in a light, easily digested food.

There are four types of fermentation which occur with yeast doughs. They are: (1) alcoholic, (2) acetic, (3) lactic, and (4) butyric. Alcoholic is the most desirable type. To ensure a predominantly alcoholic type of fermentation, it is best to have doughs come out of the mixer between 78° and 82°F. If, because of uncontrolled factors of weather or

equipment, a dough is mixed at a higher temperature, an edible product may still be produced by shortening the fermentation period. If doughs are mixed and fermented at relatively high temperatures and for long periods of time, fermentation other than alcoholic fermentation may predominate, thus producing an inferior product.

When mixing is completed, the dough is placed in a container approximately three times its size. This seemingly excessive amount of space is needed for the dough to rise during the fermentation period. The container should be greased lightly to prevent the dough from sticking. After the dough is put into the container, cover the container with a clean apron or paper. Covering the dough prevents a hard crust from forming on the top. You should find a warm draft-free area in the bakery where you can place the container of dough. Heat is important when making yeast-raised dough because heat, along with sugar, is what makes the yeast ferment during the fermentation period. Cold, drafty areas retard the fermentation process and possibly cause damage to the dough. In bakeries where a fermentation room is available, place the dough in it until it is ready for makeup. The fermentation room has control valves that keep the temperature at 80°F and the relative humidity at 75 percent. This combination is ideal for the fermentation of dough.

Exercises (061):

1. When does fermentation begin?

2. What is the primary purpose of fermentation?

3. State the four types of fermentation that take place in the fermentation of yeast dough.

062. State the fermentation time and the method for punching sweet dough.

Punching Dough. Refer to Figure 4-7. The fermentation time for yeast-raised dough is approximately 90 minutes. To determine whether or not the dough is ready to be punched, stick your fingers gently into the dough about 2 inches. If the dough begins to sink around the depression, it is ready to be punched. However, when the indentation caused by the fingers tends to spring back, the dough is not ready. Should the dough fall rapidly, the proper time for punching has already passed. You should punch and makeup the dough at once. The correct way to punch dough is to press the center down and fold the sides of the dough in toward the center until most of the carbon dioxide gas is expelled. Then allow the dough to ferment for a period of 15 to 30 minutes before makeup.

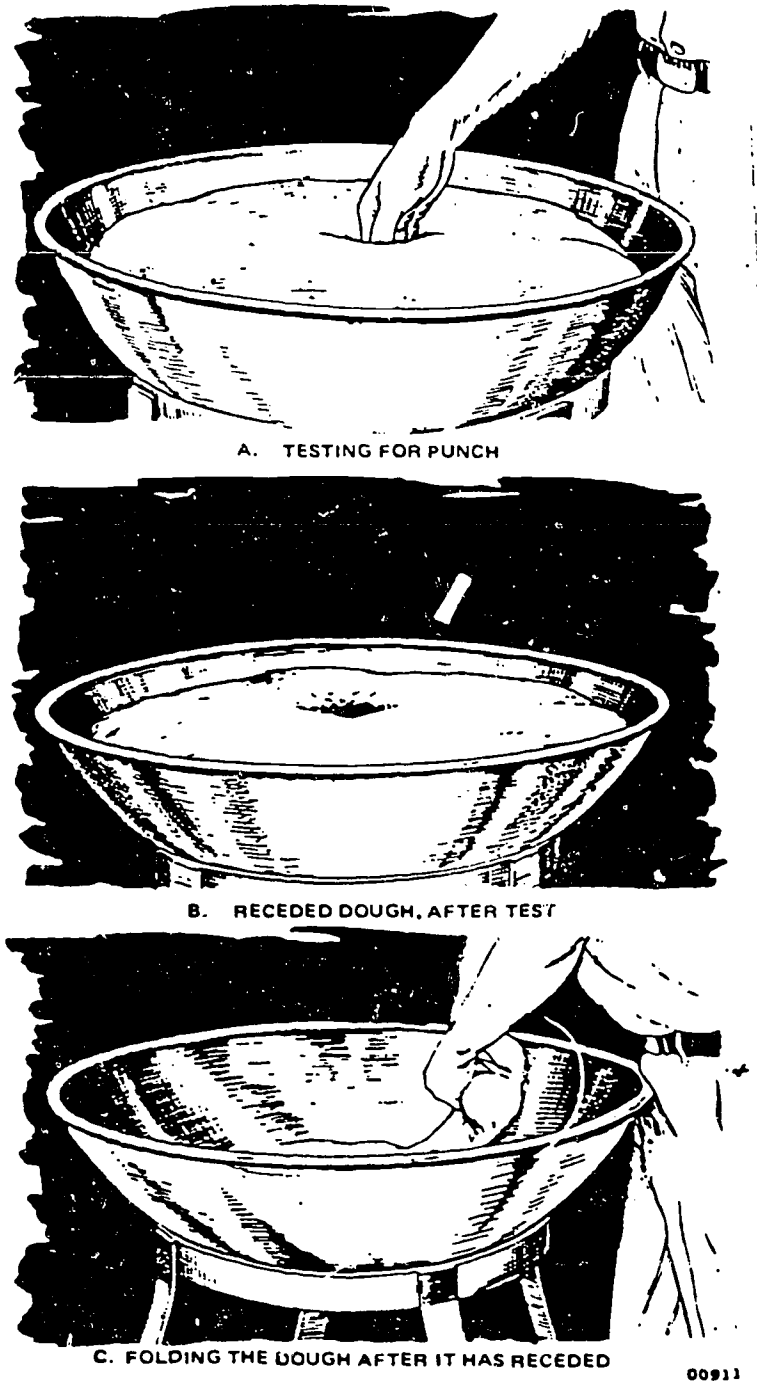

Figure 4-7. Punching dough.

Exercises (062):

1. How long should you allow yeast-raised dough to ferment?

2. How should you punch sweet dough?

063. State procedures and name the ingredients other than dough used in making cinnamon rolls.

Cinnamon Rolls. For cinnamon rolls, cut the dough into pieces weighing about 5 pounds each. Then mold them into an elongated form (about 18 inches long) and give them a short relaxing period. Next, roll out each dough piece with a rolling pin until it is about 1/4 inch thick and about 16 inches wide (fig. 4-8). Sprinkle a mixture of cinnamon and sugar on the dough (fig. 4-8). Also, you may add raisins if

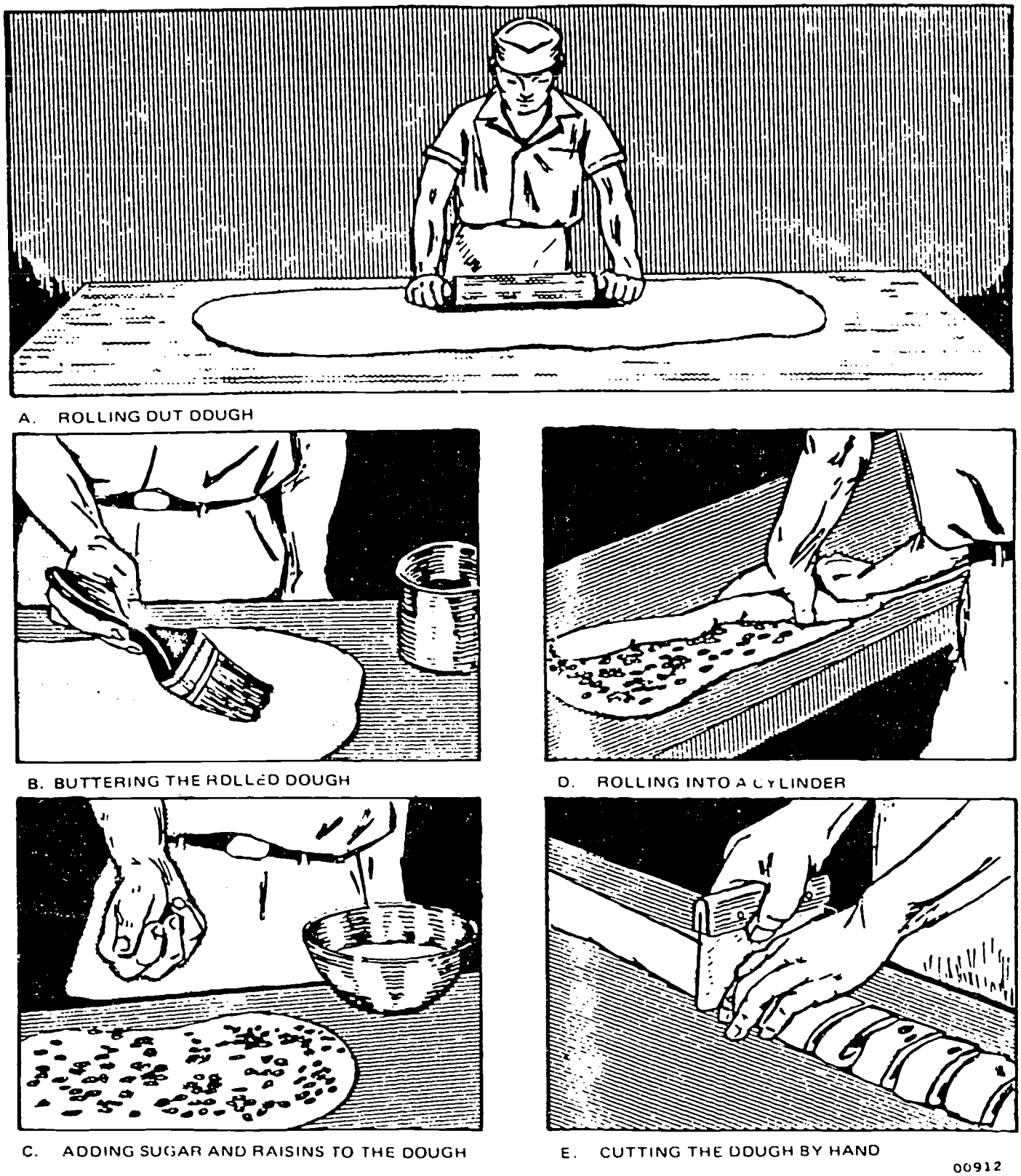

Figure 4-8. Making cinnamon rolls.

you desire. Then start from the farthest side of the dough (fig. 4-8) and roll it in a tube shape approximately 2 1/2 inches in diameter. Cut this piece of dough crosswise (fig. 4-8) into pieces about 3/4 inch long and place them on a sheet pan.

Exercises (063):

1. How much should each dough piece weigh when you cut the dough?

2. What ingredients are added to the dough in the makeup of cinnamon rolls?

3. With what should you roll out the dough?

064. Define proofing and state why sweet rolls must have a proof period before they are baked.

Proofing and Baking. After cinnamon rolls are made up, they must be allowed to proof (rise in the pan) until they are approximately double in size before baking. Maintain the temperature of the proofing cabinet at from 90° to 100°F, and the relative humidity at 80 to 85 percent. You must take extreme care when handling proofed rolls, since jarring could cause them to fall. Cinnamon rolls are best baked at 400°F for 15 to 20 minutes.

Exercises (064):

1. What is proofing?

2. Why must sweet rolls have a proof period before they are baked?

Bibliography

Department of Air Force Publications

AFR 39–1, *Airman Classification Regulation*
AFR 146–7, *Food Service Management*
AFP 146–11, *Baking Handbook*
AFM 146–12, Volume 1, *Armed Forces Recipe Service*
AFM 146–12, Volume 2, *Index of Recipes*
AFR 161–6, *Control of Communicable Diseases*
AFR 161–26, *Control of Foodborne Illnesses*

NOTE: None of the items listed in the bibliography are available through ECI. If you cannot borrow them from local sources, such as your base library or local library, you may request one item at a time on a loan basis from the AU Library, Maxwell AFB, AL 36112, ATTN: ECI Bibliographic Assistant. However, the AU Library generally lends only books and a limited number of AFMs. TOs, classified publications, and other types of publications are not available. Refer to current indexes for the latest revisions of and changes to the official publications listed in the bibliography.

Answers for Exercises

CHAPTER 1

Reference:

001 – 1. (1) a.
(2) d.
(3) b.
(4) c.

001 – 2. 62230.

002 – 1. One way is attendance at a technical training course, while the other is to receive a directed duty assignment (DDA) right after completing your basic military training.

002 – 2. For the DDA to obtain the 3 skill level, it's OJT and completion of CDC 62230 whereas usually, when a person completes a basic technical training course, the awarding of a 3 level is automatic.

003 – 1. AFR 39(en1.

003 – 2. 3 skill level.

003 – 3. 7 skill level.

003 – 4. (1) d.
(2) e.
(3) a, e, c.
(4) g.
(5) b.

004 – 1. It is setup as a chain of command which shows individual responsibility and authority.

004 – 2. You can see what part you play in the overall food service mission.

005 – 1. To provide the highest possible standards of food preparation and service to authorized personnel with in the Air Force.

005 – 2. Health, morale, and welfare.

005 – 3. Food service is also tasked with providing a trained task force of personnel who can respond to wartime taskings and contingency operations worldwide.

CHAPTER 2

006 – 1. Medical service personnel.

006 – 2. Everyone.

006 – 3. AFR 161(en26.

007 – 1. A "soap and water" attitude.

007 – 2. Physical, mental.

007 – 3. Your answer should contain any 10 of the following:
(1) Keep your fingernails short and clean.
(2) Bathe daily, especially before going on duty.
(3) Change your socks and undergarments daily.
(4) Brush your teeth a minimum of twice daily.
(5) Visit your barber or hairdresser at regular intervals.
(6) Shampoo your hair frequently.
(7) If male, have a good, close, clean shave.
(8) If male, wear a clean white hat; if female, wear a hair-net.
(9) All personnel should wear clean white uniforms.
(10) Keep all of your shoes polished and in good repair.
(11) Check all coughs and sneezes with a hankerchief or a disposable tissue.
(12) Do not touch your face or mouth with your hands when you are handling foods.
(13) Do not smoke in food preparation or serving areas.
(14) If possible, use forks, tongs, or spoons—not your hand—when preparing or serving food.
(15) Use a clean utensil when sampling food during its preparation.
(16) Handle cups, glasses, plates, and other containers used in the consumption or preparation of food by the outside edges or areas only.
(17) Remove all wrist watches and rings (except wedding rings) before and during food preparation and serving.
(18) Get prompt medical attention for any cuts and scratches which are of a more than a superficial nature.

007 – 4. Staphylococci bacteria.

007 – 5. The possibility of spreading germs among food consumers.

007 – 6. Prolongs the life of your shoes and reduces the possibility of bad odor or possible food ailments.

007 – 7. Qualified medical personnel.

008 – 1. Respiratory, intestinal, and insect borne

008 – 2. Respiratory.

008 – 3. Intestinal.

008 – 4. Insect borne.

008 – 5. (1) The source, (2) the means of transmission, and (3) the susceptible person.

009 – 1. Supervisory inspection, physical examination, and medical service inspection.

009 – 2. Supervisory inspection and physical examination.

009 – 3. Your answer should contain any three of the following areas: (1) Personal appearance, (2) techniques used in food preparation, area and equipment cleanliness, handwashing facilities, and the temperatures of foods being served, of wash and rinse waters of dishwashing machines, in ice boxes and freezers, etc. (3) As well as finger cultures of personnel on duty and swab cultures of plates, cups, glasses, eating, and serving utensils, and vessels used in preparing and serving food.

010 – 1. (1) Dirt that is soluble in water, (2) dirt that is insoluble in water, and (3) dirt that produces a stain.

010 – 2. By water.

010 – 3. By a solvent or an emulsifying agent.

010 – 4. Those emusifying dirt with water and those removing dirt by abrasive action.

010 – 5. By dissolving the substance causing the stain; by the action of a bleaching agent; and by absorbing the substance causing the stain.

010 – 6. Because cleaning agents tend to attack surfaces as well as the dirt or grime on those surfaces, there is a preferred cleaning agent and cleaning process for every cleaning operation. You only have to match your surface to be cleaned with the preferred agent and process for that surface.

011 – 1. (1) Provides necessary sanitation, (2) protects the floor against undue damage and wear caused by abrasive dirt, and (3) adds to attractiveness of the facility.

011 – 2. Wet and damp mopping.

011 – 3. With a disk-type buffing machine or cylinder-type machine with a tampico brush. You can put a lamb's-wool pad or a piece of

blanket under the buffer to give a higher luster or to remove brush marks.

011 – 4. With a chamois, a rubber squeegee, or a clean, lint-free cloth.

012 – 1. a. 140to 160°F.
b. 170°F.

012 – 2. a. 120 to 130°F.
b. 140 to 150°F.
c. 170°F.

013 – 1. By mopping.
013 – 2. Grease.
013 – 3. Toilet.
013 – 4. Dressing rooms and lockers.

014 – 1. The common housefly and cockroach.
014 – 2. (1) Proper sanitation, (2) eliminating breeding areas, (3) proper screening, and (4) use of chemicals.
014 – 3. (1) Fill all cracks and crevices, (2) eliminate all likely breeding places, (3) keep food covered, and (4) watch food deliveries so that roaches are not brought in.
014 – 4. The species to be controlled.

CHAPTER 3

015 – 1. Sugars and starches.
015 – 2. The surplus is stored as body fat.
015 – 3. In terms of calories.
015 – 4. Proteins.
015 – 5. Carbohydrates.
015 – 6. Proteins broken down by digestive processes into simpler substances.
015 – 7. Protein.
015 – 8. Animal and vegetable.

016 – 1. Teeth and bones.
016 – 2. Vitamins.
016 – 3. Calcium.
016 – 4. Clotting of blood, works with potassium and sodium to control heart functions.
016 – 5. 70.
016 – 6. In the hemoglobin in the red blood cells.
016 – 7. Keeps the water content of the body at the required levels.
016 – 8. Vitamin B_1, or thiamin.
016 – 9. Vitamin B_2.
016 – 10. Vitamin C.
016 – 11. Vitamin D.
016 – 12. The vehicle for transporting food materials to the body cells and the medium which chemical changes take place. It helps to regulate the body temperature, eliminate wastes and lubricate the body's moving parts.

017 – 1. In a cool, dry, and dark place.
017 – 2. By not overcooking them.
017 – 3. Meat and poultry.
017 – 4. High temperatures.
017 – 5. Vitamin B_1.
017 – 6. Vitamin C.

018 – 1. 1/4, 1/2, 3/4, 1/3, 2/3.
018 – 2. 1/4 and 1/2 teaspoon, 1 teaspoon, and 1 tablespoon.
018 – 3. AFM 146–12.

019 – 1. (1) b.
(2) e.
(3) f.
(4) c.
(5) d.
(6) a.

020 – 1. (1) d.
(2) b.
(3) e.
(4) a.
(5) c.

021 – 1. (1) e.
(2) d.
(3) b.
(4) c.
(5) a.

022 – 1. (1) b.
(2) a.
(3) c.
(4) d.
(5) e.

023 – 1. (1) c.
(2) b.
(3) a.

024 – 1. Roasters are usually under 8 months of age.
024 – 2. A castrated male chicken usually under 10 months of age.
024 – 3. A hen or stewing chicken.
024 – 4. Male turkeys that are usually less than 8 months.

025 – 1. Finfish and shellfish.
025 – 2. Fresh-frozen or prefabricated frozen finfish.
025 – 3. Mollusks and crustaceans.
025 – 4. Oysters, scallops, clams, lobsters, shrimp, and crab.

026 – 1. Longer.
026 – 2. To allow the hot air to circulate freely.
026 – 3. The greater the oven load, the greater the cooking time.
026 – 4. Type and grade of meat, size of cuts and total amount to be prepared, number of cuts per pan, oven or griddle load, equipment to be used, frozen or fresh product, and time available for preparation.
026 – 5. Lowers the temperature causing excessive recover time.

027 – 1. Muscles that do a lot of work and have a high ratio of connective tissue.
027 – 2. Lack of fat and lack of connective tissue.
027 – 3. It is the flesh of a young animal that contains little connective tissue.
027 – 4. Well done.
028 – 1. The temperature should be lower and the cooking time longer.
028 – 2. Well done.
028 – 3. Its high-fat content.
028 – 4. AFM 146–12.

029 – 1. The age and size of the bird.
029 – 2. Moist-heat method.
029 – 3. Dry-heat method.
029 – 4. Press with a fork to test for flaking.

030 – 1. The way it is prepared and the nutrients that have been preserved.
030 – 2. Baking, steaming, and cooking in a liquid.
030 – 3. (1) Prolonged heating destroys nutritive value (2) decreases palatability, (3) ruins the appearance of the vegetables.

031 – 1. Until just before use.
031 – 2. To prevent discoloration.
031 – 3. Because it loses moisture and becomes discolored if exposed to air for a long time.
031 – 4. Near the skin.

032 – 1. Roux.
032 – 2. Special, white or cream, and dessert.
032 – 3. The roux is browned.
032 – 4. Milk

033 – 1. To 45°F within 4 hours.
033 – 2. As protective cover that helps prevent any bacterial growth.
033 – 3. Thin and clear or thick and creamy.
033 – 4. Chicken, okra, tomatoes, green peppers, and rice.

034 – 1. To prevent lumping.
034 – 2. Add slowly into boiling salted water and stir occasionally.

035 – 1. Jumbo to small.
035 – 2. It covers only a small area of the griddle. The yolk is upstanding; the white is large and thick and stands firmly around the yolk.
035 – 3. To stop the cooking process and to keep the yolk from discoloring.

036 – 1. Makes it stringy.
036 – 2. Fresh, canned, concentrated, evaporated, condensed, and powdered.
036 – 3. It destroys their flavor and vitamin content.

037 – 1. Because they wilt.
037 – 2. By tearing, slicing, dicing, or chopping them.
037 – 3. French, cream, mayonnaise, and cooked.

038 – 1. Percolator, drip or urn, and vacuum.
038 – 2. Thaw the frozen concentrated fruit drinks.

039 – 1. Fillings, breads, the method of preparation and the garnish.
039 – 2. AFM 146–12.
039 – 3. Bread.
039 – 4. Butter, salad dressing, mustard, catsup or various types of sandwich spreads.
040 – 1. To provide brief, concise instructions to assure the preparation of consistent quality food items.
040 – 2. 100 people.
040 – 3. AFM 146–12.
040 – 4. (1) Title.
(2) Identifier.
(3) Yield.
(4) Size of portion.
(5) Ingredients and amounts.
(6) Brief and clear instructions.

041 – 1. To adjust the recipe yield; to use specific amounts of an ingredient already available such as leftovers; to produce a specific number of larger or smaller portions.
041 – 2. Changing the amounts of ingredients from pounds and ounces to decimals.
041 – 3. There is a recipe conversion chart in the "A General Information" section of AFM 146–12, card number 1 (1).

042 – 1. Establishing a waste-control program.
042 – 2. Poor preparation.
042 – 3. (1) Checking all areas of food production and service.
(2) Food studies assist in pin-pointing problem areas in food production.
(3) Watch for plate waste.
(4) Evaluate serving portions and appearance of food.
(5) Practice progressive cooking.

043 – 1. When you cook only small portions of foods to coincide with the serving intervals.
043 – 2. To provide a freshly prepared product to the consumer, whether its at the beginning or the end of the serving period.
043 – 3. (1) Food nutrients are conserved.
(2) Fresh food is available continuously.
(3) The bulk of the food is available when needed.
(4) Leftovers are reduced to minimum.

044 – 1. AFM 146–12.
044 – 2. Taste testing.

045 – 1. A decoration added to food.
045 – 2. Sprigs of parsley, sliced stuffed olives, and maraschino cherries.

046 – 1. So that it won't get cold.
046 – 2. Food must be arranged on the serving line, not deposited.

047 – 1. To produce a more desirable serving as this shortens the muscle fibers making it easier to chew.
047 – 2. Breast side up.
047 – 3. a. 3.
b. 5.
c. 2.
d. 1.
e. 4.

048 – 1. Try to serve a portion of the browned surface to each diner if possible.
048 – 2. Asks the diner where to place this gravy or sauce.
048 – 3. According to menu specifications and the desires of the consumer.

CHAPTER 4

049 – 1. (1) d.
(2) f.
(3) a.
(4) c.
(5) j.
(6) e.
(7) h.
(8) b.
(9) i.
(10) g.

050 – 1. Flour.
050 – 2. As a yeast food or sweetner.
050 – 3. For frostings.
050 – 4. They become soft and dissolve completely.
050 – 5. Molasses, brown sugar, and honey.
050 – 6. Honey.
050 – 7. It aids in the control of fermentation.
050 – 8. Shortening.
050 – 9. Structure.
050 – 10. Milk solids.
050 – 11. Baking soda.

051 – 1. Heavy-duty scales and light, sensitive scales.
051 – 2. (1) Use a shortening and flour mixture, (2) use a salad oil and flour mixture, (3) line the pans with wax paper, or (4) grease the pan with shortening and dust it with flour.

052 – 1. Batter type and angel food.
052 – 2. Batter type.
052 – 3. Angel food.

053 – 1. Press in the top of the cake about 1/16 inch. If the cake is done it springs back.
053 – 2. 10 minutes.

054 – 1. Stiff and soft batter.
054 – 2. Stiff batter.
055 – 1. When they are slightly underbaked.
055 – 2. They are dry and lose their flavor rapidly.
055 – 3. They may be iced or garnished with sugar, nuts, raisins or coconut.

056 – 1. Double-crust fruit pies, single-crust custard pies, and single-crust cream pies.
056 – 2. Single-crust cream pies.
056 – 3. Double-crust fruit pies and single-crust cream pies.

057 – 1. Mix all ingredients together except water until lumps about the size of marbles are obtained, then add water and mix enough to form a dough.
057 – 2. About 8 ounces.
057 – 3. 10 inches.
057 – 4. 1/8 inches.
057 – 5. Firm.
057 – 6. 8 ounces.
057 – 7. 6 ounces.

058 – 1. Ungreased pans.
058 – 2. Wash the edge with water or a milk and egg mixture.

058 – 3. To let steam escape from the pie filling during baking.
058 – 4. To give the pie a golden brown color.
206.
059 – 1. With cornstarch or with pregelatinized starch.
059 – 2. Pregelantized starch. Because you can prepare a batch of filling in minutes as opposed to hours required to cook and cool conventional fruit fillings. Since there is no loss through evaporation; thus 6 to 12 percent more fillings is produced.

060 – 1. To distribute the yeast cells, free the dough of lumps, and form and develop the gluten.
060 – 2. Because the dough becomes too sticky and lacks elasticity, thus producing an inferior product.

061 – 1. Immediately after yeast is put into the dough.
061 – 2. Leavening.
061 – 3. Alcoholic, acetic, lactic, and butyrics.

062 – 1. 90 minutes.
062 – 2. Press the center down and fold the sides of the dough in toward the center.

063 – 1. 5 pounds.
063 – 2. Butter or margarine, cinnamon, sugar, and raisins (optional).
063 – 3. A rolling pin.

064 – 1. Allow dough to rise.
064 – 2. So they can double in size.

AUGAFS, AL (862289) 1300
631-028 / 40238

STOP - 1. MATCH ANSWER SHEET TO THIS EXERCISE NUMBER.
2. USE NUMBER 2 PENCIL ONLY.

EXTENSION COURSE INSTITUTE
VOLUME REVIEW EXERCISE

62230 01 26

FUNDAMENTALS OF FOOD PREPARATION AND SERVICE

Carefully read the following:
DO's:

1. Check the "course," "volume," and "form" numbers from the answer sheet address tab against the "VRE answer sheet identification number" in the righthand column of the shipping list. If numbers do not match, return the answer sheet and the shipping list to ECI immediately with a note of explanation.
2. Note that item numbers on answer sheet are sequential in each column.
3. Use a medium sharp #2 black lead pencil for marking answer sheet.
4. Write the correct answer in the margin at the left of the item. (When you review for the course examination, you can cover *your* answers with a strip of paper and then check your review answers against your original choices.) After you are sure of your answers, transfer them to the answer sheet. If you *have* to change an answer on the answer sheet. be sure that the erasure is complete. Use a clean eraser. But try to avoid any erasure on the answer sheet if at all possible.
5. Take action to return entire answer sheet to ECI.
6. Keep Volume Review Exercise booklet for review and reference.
7. If *mandatorily* enrolled student, process questions or comments through your unit trainer or OJT supervisor. If *voluntarily* enrolled student, send questions or comments to ECI on ECI Form 17.

DON'Ts:

1. Don't use answer sheets other than one furnished specifically for each review exercise.
2. Don't mark on the answer sheet except to fill in marking blocks. Double marks or excessive markings which overflow marking blocks will register as errors.
3. Don't fold, spindle, staple, tape, or mutilate the answer sheet.
4. Don't use ink or any marking other than a #2 black lead pencil.

NOTE: **NUMBERED LEARNING OBJECTIVE REFERENCES ARE USED ON THE VOLUME REVIEW EXERCISE.** In parenthesis after each item number on the VRE is the *Learning Objective Number* where the answer to that item can be located. When answering the items on the VRE, refer to the *Learning Objectives* indicated by these *Numbers*. The VRE results will be sent to you on a postcard which will list the *actual* VRE *items you missed*. Go to the VRE booklet and locate the *Learning Objective Numbers* for the items missed. Go to the text and carefully review the areas covered by these references. Review the entire VRE again before you take the closed-book Course Examination.

MULTIPLE CHOICE

Note to Student: Consider all choices carefully and select the *best* answer to each question.

1. (001) In AFSC 62230, the *3* indicates the
   a. skill level.
   b. career field.
   c. specific AFSC.
   d. career field subdivision.

2. (001) Which digit of an AFSC indicates a person's skill level?
   a. First.
   b. Second.
   c. Third.
   d. Fourth.

3. (002) Usually when a person completes a basic training technical course they are what skill level?
   a. 1.
   b. 3.
   c. 5.
   d. 7.

4. (003) Information on the education that a person needs to perform well in a specialty is found in which section of the AFS description?
   a. Specialty summary.
   b. Duties and responsibilities.
   c. Specialty qualifications.
   d. Specialty data.

5. (004) What is the food service organizational chart set up as?
   a. A chain of command.
   b. An administrative aid.
   c. A managerial tool.
   d. An on-the-job training plan.

6. (005) What additional responsibility is Air Force food service tasked with?
   a. Assist MWR in worldwide operations.
   b. Coordinate with AFCOMS concerning subsistence.
   c. Assist common services in food management manners.
   d. Respond to wartime taskings and contingency operations.

7. (006) Sanitation standards for Air Force food service facilities are outlined in
   a. AFR 161-26.
   b. AFR 161-8.
   c. ASFR 146-15.
   d. AFR 146-7.

8. (006) AFR 161-26 establishes what types of standards for food service personnel?
   a. Nutrition.
   b. Sanitation.
   c. Manpower.
   d. Accountability.

9. (007) Sanitation and hygiene involves what two factors?
   a. Mental and physical.
   b. Mental and personal.
   c. Physical and environmental.
   d. Personal and environmental.

10. (007) Which of the following precautions is a part of the personal hygiene checklist for food service personnel?
    a. Bathe at least every two days.
    b. Keep fingernails long and clean.
    c. Remove all rings after food preparation.
    d. Brush your teeth at least twice daily.

11. (008) Scarlet fever is an example of
    a. an insect-borne disease.
    b. a food-borne disease.
    c. an intestinal disease.
    d. a respiratory disease.

12. (009) Which of the following is normally unannounced and may require taking finger cultures from personnel on duty?
    a. Medical services inspection.
    b. Food handler's examination.
    c. Supervisor's inspection.
    d. Semiannual inspection.

13. (010) Which of the following is a list of the categories of dirt?

    a. Dirt that is soluble in water and dirt that is insoluble in water.
    b. Dirt that produces a stain and dirt that does not produce a stain.
    c. Dirt that produces a stain, dirt that is insoluble in water and dirt that is soluble in water.
    d. Dirt that produces a stain, dirt that does not produce a stain, and dirt that is soluble in water.

14. (010) What type of cleaning agent does *not* produce suds, but does soften the material that binds the dirt to the surface?

    a. Alkali.
    b. Detergent.
    c. Soap.
    d. Abrasive.

15. (011) When cleaning windows, you should remove the water from the windowpanes with

    a. a chamois.
    b. squeegee.
    c. a clean lint-free cloth.
    d. any of the above.

16. (012) The water in the first sink of the three compartment sink should have a temperature of

    a. 120° to 130° F.
    b. 130° to 140° F.
    c. 140° to 150° F.
    d. 150° to 160° F.

17. (013) No matter what procedure you use to clean the kitchen floor, you *must* always

    a. dry it completely.
    b. mop it with a strong disinfectant.
    c. scrub it with a properly diluted sanitizing solution.
    d. buff it to a high glass shine.

18. (013) What *must* be cleaned up immediately any time it is spilled on the floor?

    a. Water.
    b. Grease.
    c. Food.
    d. Soup.

19. (014) What two insects are *most* commonly found in food service establishments?

    a. Housefly and beetle.
    b. Housefly and cockroach.
    c. cockroach and rat.
    d. Ant and beetle.

20. (014) Which of the following is *not* a proper procedure for a fly control program?

    a. Clean latrines every other day.
    b. Have garbage picked up daily.
    c. Screen all windows and doors.
    d. Protect foods by screening or refrigeration.

21. (015) The following parts of the body made up *almost* entirely of proteins are the

    a. skin, nails, and brain.
    b. hair, nails, and body fat.
    c. hair, nails, and internal organs.
    d. hair, skin, nails, and muscle tissue.

22. (016) The lack of a vitamin which may result in blindness is vitamin

    a. A.
    b. B_1.
    c. D.
    d. K.

23. (017) Heating butter to a frying temperature results in the complete loss of what vitamin?

    a. A.
    b. B_1.
    c. C.
    d. D.

24. (017) Vitamin B_1 is *not* affected by exposure to

    a. heat.
    b. air.
    c. water.
    d. baking soda.

25. (018) If scales are not available to weight ingredients, you should

    a. use a different recipe.
    b. ask your supervisor for suggestions or assistance.
    c. estimate the amounts needed by using your own judgment.
    d. measure them by using graduated measures, standard cups, and spoons.

26. (018) If three teaspoons are equal to one tablespoon, how many level tablespoons equal one cup?

a. 14.
b. 16.
c. 18.
d. 24.

27. (019) Cooking in a small amount of fat on the top of the stove is known as

a. frying.
b. braising.
c. sauteing.
d. roasting.

28. (020) Which of the following herbs and spices is a small red pepper, grown mainly in Africa, and used in meats, fish, sauces, and egg dishes?

a. Cayenne pepper.
b. Paprika.
c. Oregano.
d. Chili powder.

29. (021) Which of the following is *not* a dry-heat cooking method?

a. Broiling.
b. Roasting.
c. Braising.
d. Deep-fat frying.

30. (021) Which of the following is a dry-heat cooking method?

a. Simmering.
b. Braising.
c. Steaming.
d. Deep-fat frying.

31. (022) Braising is different from simmering in that braising

a. is done at a lower temperature.
b. cooks the food faster than simmering.
c. begins by first browning the product in a small amount of fat.
d. is recommended only for tender cuts of meat; simmering is for tough cuts.

32. (023) Select the statement about veal that is the *most* correct.

a. Veal has more fat than beef.
b. Veal is the flesh of mature sheep.
c. Quality veal is low in connective tissue and very tender.
d. Veal has a low water content.

33. (023) Which of the following statements about pork is *incorrect?*

a. Young pork should be a delicate rose color.
b. Pork's flavor is due largely to fat imbedded in the flesh.
c. Quality pork is firm, fine-grained, and free of excess moisture.
d. Lean pork should be well-marbled and covered with firm white fat.

34. (024) One method of estimating the age of a chicken is to test the flexibility of the

a. neck.
b. wings.
c. thigh joints.
d. breastbone cartilage.

35. (024) A young turkey of either sex, usually under 16 weeks of age is

a. a tom turkey.
b. a hen turkey.
c. a frying turkey.
d. a capon.

36. (025) The two principle forms of finfish served in the dining hall are

a. fresh frozen, and prefabricated frozen.
b. fresh frozen, prepared canned.
c. canned, and prefabricated.
d. fresh, and frozen breaded.

37. (025) Which of the following would not be a shellfish?

a. Oysters.
b. Scallops.
c. Shrimp.
d. Halibut.

38. (026) Which of the following statements is *not* true concerning the cooking of meat?

a. A standing rib roast will cook in less time than a rolled roast.
b. A chunky roast will cook in less time than a flat one.
c. When cooking frozen meat do not crowd roasts in a pan.
d. The more meat placed in the oven at one time, the greater the cooking time.

39. (027) Which of the following is *not* a less tender cut of beef?

a. Flank.
b. Brisket.
c. Outside round heel.
d. Standing rib roast.

40. (027) The cooking methods best suited for veal are

a. braising, and stewing.
b. broiling, and simmering.
c. broiling, and pan-broiling.
d. pressure cooking, and steaming.

41. (028) Which of the following statements is *not* true about the cooking of pork?

a. Always cook pork well done.
b. Pork has a high amount of shrinkage when cooked.
c. ALways use a lower temperature, and shorter amount of cooking time.
d. Pork has high amount of fat.

42. (029) The moist-heat cooking method is used for older poultry because

a. they are too large for frying.
b. the dry-heat method takes too long.
c. dry-heat cooking causes excessive shrinkage.
d. the steam is needed to tenderize the muscles.

43. (029) What method is used to test a fish for doneness?

a. Meat thermometer.
b. Oven thermometer.
c. Fork test.
d. Joint test.

44. (030) The cooking time for frozen vegetables begins

a. when the water comes to a boil before the vegetables are added.
b. when the water comes to a boil after the vegetables are added.
c. as soon as the vegetables are added to the water.
d. when the vegetables are removed from the freezer for thawing.

45. (031) To keep pared fruit from discoloring, cover it with

a. lemon juice.
b. thick syrup.
c. water and baking soda.
d. water and salt solution.

46. (032) What is the main thickening agent for sauces and gravies?

a. Cornstarch.
b. Flour and water.
c. Roux.
d. Eggs.

47. (032) What liquid is used in the preparation of a cream sauce?

a. Water.
b. Milk.
c. Beef stock.
d. Meat drippings.

48. (033) Which of the following soups would be classified as a thin and clear soup?

a. Gumbo.
b. Chowder.
c. Broth.
d. Puree.

49. (034) Which of the following cereals should be combined with enough cold water to form a smooth paste and then stirred slowly into boiling water?

a. Flake grain.
b. Whole grain.
c. Ready to eat.
d. Fine grain.

50. (034) During preparation, what will prevent the formation of skin on the top of ready to cook cereals?

a. Adding hot water.
b. Adding cold water.
c. Covering it.
d. Adding salt.

51. (035) A poor quality hard cooked egg would have

a. an off-centered yolk.
b. a well-centered yolk.
c. a well-centered yolk with a greenish tinge.
d. an off-centered yolk with a greenish tinge.

52. (035) Hard cooked eggs are set in cold water after cooking to

a. keep the shells from cracking.
b. stop the cooking process.
c. keep the yolk from crumbling.
d. wash the salt off.

53. (036) When using chees s a topping for casseroles, it is added

a. when the casserole is just about done.
b. when mixing the ingredients for the casserole.
c. at the beginning of the cooking process.
d. in the middle of the cooking process.

54. (036) Most of the recipes in AFM 146-12 call for what type of milk?

a. Fresh.
b. Condensed.
c. Evaporated.
d. Powdered, non-fat, dry.

55. (037) When using salad greens for a tossed salad, how should they be prepared?

a. Torn.
b. Sliced.
c. Chopped.
d. Diced.

56. (037) Which of the following is *not* one of the basic types of salad dressings?

a. French.
b. Mayonnaise.
c. Italian.
d. Cream.

57. (038) What type of fruit drinks should be chilled before serving?

a. Canned.
b. Powdered.
c. Instant.
d. Frozen, concentrated.

58. (039) How many components does it take to construct a sandwich?

a. 2.
b. 4.
c. 6.
d. 8.

59. (039) Which of the following components is considered the foundation of a sandwich?

a. Filling.
b. Bread.
c. Garnish.
d. Moistening agent.

60. (040) How many people are the standardized recipe cards in the Armed Forces Recipe Service designed to feed?

a. 50.
b. 75.
c. 100.
d. 125.

61. (040) Each standard recipe in the Armed Forces Recipe Service consists of how many specific areas?

a. 2.
b. 4.
c. 6.
d. 8.

62. (041) To convert recipes you should change the amounts of ingredients to what numerical values?

a. Pounds and ounces to decimal.
b. Milligram and grams to decimal.
c. Milligram and ounces to decimal.
d. Pounds and milligrams to decimal.

63. (041) Information concerning a recipe conversion chart can be located in a section of

a. AFR 146-7.
b. AFM 146-12.
c. AFP 146-16.
d. AFR 146-18.

64. (042) Who's responsible for waste prevention in Air Force food service facilities?

a. DOD.
b. HQ USAF.
c. MAJCOM.
d. Each individual.

65. (042) How can leftover food items be kept to a minimum?

a. Using progressive cooking.
b. Discarding all leftovers.
c. Freezing and reusing leftovers at a later date.
d. Transferring leftover foods to other dining facilities.

66. (043) Progressive cooking assures you that

a. all food items will be readily accepted by diners.
b. the cooking times will be reduced.
c. food nutrients are conserved.
d. there will be no leftovers.

67. (044) If you prepare a food item you do *not* personally care for, you should

a. be sure to follow the recipe.
b. assume the product is acceptable.
c. have someone else taste the finished product.
d. call your supervisor when the food is ready.

68. (044) What publication is designed to ensure that all foods served are standard in taste and appearance?

a. AFR 146-7.
b. AFM 146-12.
c. AFR 146-15.
d. AFM 163-8.

69. (045) What is primarily a decoration added to food?

a. Garnish.
b. Condiments.
c. Herbs.
d. Spices.

70. (045) Which of the following is *not* a guide to effective garnishing?

a. Vary the food garnishes.
b. Plan the garnishes ahead.
c. Use restraint in garnishing.
d. Be sure each dish or food item is garnished.

71. (046) What is the cardinal principle for displaying food on the serving line?

a. Food should be arranged, not deposited.
b. Food should be deposited, not arranged.
c. Food should be served properly.
d. Food should be kept warm.

72. (046) Which of the following foods should be served first or nearest to the beginning of the serving lines?

a. Soup.
b. Salad.
c. Meat.
d. Vegetables.

73. (047) Which of the following is a correct procedure for carving meat?

a. Stick a meat fork 1 to 2 inches from the edge to be cut.
b. Always carve across the grain.
c. Always carve with the grain.
d. Make short strokes half the length of the blade.

74. (047) How far from the edge to be cut should the meat fork be inserted in the roast?

a. Flush to the edge to be cut.
b. 1 to 2 inches.
c. 2 to 3 inches.
d. 3 to 4 inches.

75. (048) When serving chowder, a customer's bowl should be filled to what fraction of it's capacity?

a. One-half.
b. Two-thirds.
c. Three-quarters.
d. Seven-eights.

76. (049) What is a liquid brushed on the surface of an unbaked pie in order to give it a golden, brown color when it is baked?

a. Knead.
b. Glaze.
c. Wash.
d. Ice.

77. (049) A mixture of combined ingredients thin enough to be dropped by a spoon is called

a. glaze.
b. batter.
c. dough.
d. frosting.

78. (050) Which ingredient controls the outward spread of cookies during baking?

a. Milk.
b. Sugar.
c. Flour.
d. Shortening.

79. (050) In yeast levened sweet doughs, the weight of the eggs should be

a. about equal to the weight of the milk.
b. about equal to the weight of the shortening.
c. half the weight of the shortening.
d. twice the weight of the milk.

80. (051) When weighing items such as cinnamon, baking powder, or salt, what type of scale should be used?

a. A Hobart scale.
b. A condiment scale.
c. A sensitive scale.
d. A heavy-duty scale.

81. (051) After baking, you find that your cake is thin on one-side and thick on the other. What is the most likely cause?

a. The pan was warped.
b. The oven was unevenly heated.
c. The pan was improperly prepared.
d. The batter was spread unevenly in the pan before baking.

82. (051) Which of the following is *not* a basic method for preparing pans for baking cakes?

a. Using shortening and flour.
b. Using salad oil and flour.
c. Using water and flour.
d. Using wax paper.

83. (052) Which of the following are the types of cakes mixed in the Air Force dining halls?

a. Angel Food and Devil's food.
b. Batter and Chiffon.
c. Chiffon and Angel Food.
d. Batter and Angel Food

84. (052) After a cake batter is mixed, the proper temperature of the batter should be between

a. 50° and 55° F.
b. 55° and 60° F.
c. 62° and 68° F.
d. 72° and 78° F.

85. (052) What type of cake is made from egg whites, granulated sugar, salt, flavoring, cream of tarter, and flour?

a. Devil's Food cake.
b. Angel Food cake.
c. Vanilla cake.
d. Chocolate cake.

86. (053) When checking a cake for doneness you press in the top with your fingers and it is done if

a. the cake sinks.
b. the cake springs back.
c. the cake sticks to your finger.
d. your fingers leave an indentation.

87. (053) How long after a cake is baked should it be allowed to cool before removing it from the pan?

a. 10 minutes.
b. 16 minutes.
c. 20-25 minutes.
d. 30 minutes.

88. (054) When preparing stiff-batter cookie dough for make-up, to what diameter should the dough be rolled out?

a. 1/4 inch.
b. 1/2 inch.
c. 3/4 inch.
d. 1 inch.

89. (054) The difference between soft batter and stiff batter cookie dough is the soft batter cookie dough contains

a. more salt.
b. more sugar.
c. more flour.
d. more moisture.

90. (055) It is *best* to remove cookies from the oven slightly underbaked because

a. they dry out after they've cooled.
b. the heat from the pan will finish cooking them.
c. they will lose their crispness when overbaked.
d. they lose their flavor if allowed to cook completely.

91. (055) If you wish to garnish cookies with raisins or nuts they should be added

a. before baking.
b. during the baking.
c. after baking.
d. five minutes before the cookies are done.

92. (056) A good quality pie depends upon two things,

a. fresh fruit and crisp crust.
b. proper filling and tender crust.
c. a fresh topping and golden crust.
d. prepared filling and pre-baked pie shell.

93. (056) The three basic types of pies are double-crust fruit, single-crust cream, and

a. meringue topped.
b. whipped topping.
c. prebaked pie shells.
d. single-crust custard.

94. (057) Which statement *best* describes the appearance of good pie dough when all the ingredients except water have been mixed together?

a. It should be a smooth, thick paste.
b. It should be a powdery consistency.
c. It should have lumps about the size of marbles.
d. It should appear to be fine and granular resembling corn meal.

95. (057) To what thickness should pie dough be rolled?

a. 1 1/6 inch.
b. 1/8 inch.
c. 1/4 inch.
d. 1/2 inch.

96. (057) When machine rolling dough, a double-crust pie requires 6 ounces of dough for the top crust. How much dough is used for the bottom crust?

a. 4 ounces.
b. 6 ounces.
c. 8 ounces.
d. 10 ounces.

97. (058) What is the purpose of the cuts in the top crust of a pie?

a. For decoration.
b. To check the pie for doneness.
c. To let steam escape during baking.
d. To identify what type of pie it is.

98. (058) You should *not* wash the outer edge of a double-crust pie because

a. the edge will shrink.
b. it will make the edge shrink.
c. it will cause the thin edge to crack and break easily.
d. it will cause the thin edge to burn before the rest of the pie finishes.

99. (059) When preparing a cooked fruit filling with cornstarch, it should be prepared

a. just before using.
b. well ahead of time.
c. in advance and cooked.
d. carefully and kept warm.

100. (059) Pregelatinized starch is preferred to cornstarch in fruit fillings because

a. it produces a flakier crust.
b. there is less cooking required.
c. it produces 6 to 12 percent more filling.
d. all of the above.

101. (060) Through mixing of yeast dough is necessary to distribute the yeast cells, to remove any lumps, and

a. to develop the gluten.
b. to break up the gluten.
c. to force out excess air.
d. to break down the elasticity.

102. (060) Over mixing yeast-raised dough will cause the dough to become

a. lumpy.
b. tough.
c. very dry.
d. very sticky.

103. (061) After mixing is completed, yeast dough should be placed in a container that is

a. ungreased and at least twice the size of the dough mass.
b. approximately three times the size of the dough mass.
c. prewarmed and lightly greased.
d. cold and ungreased.

104. (061) What is the ideal temperature and relative humidity for fermentation of dough?

a. 75° F, 60 percent.
b. 72° F, 75 percent.
c. 75° F, 80 percent.
d. 80° F, 75 percent.

105. (061) The fermentation time for yeast-raised dough is about

a. 15 minutes.
b. 30 minutes.
c. 90 minutes.
d. 2 hours.

106. (062) What is the correct method for punching sweet dough?

a. Press the center down and fold the center to the sides.
b. Press the sides down and fold the sides to the center.
c. Press the center and sides down.
d. Press the center down and fold the sides in toward the center.

107. (062) How long should the dough be able to ferment after punching?

a. 10 to 20 minutes.
b. 15 to 30 minutes.
c. 15 to 20 minutes.
d. 10 to 30 minutes.

108. (063) For cinnamon rolls, the dough is cut into pieces weighing about

a. 1 pound each.
b. 2 pounds each.
c. 5 pounds each.
d. 8 pounds each.

109. (019) What length should the dough for cinnamon rolls be cut crosswise?

a. 3/4 inch.
b. 1 inch.
c. 1 3/4 inch.
d. 2 inches.

110. (064) How long should cinnamon rolls be proofed before baking?

a. 15 to 20 minutes.
b. 25 to 30 minutes.
c. Until they double in size.
d. Until they triple in size.

END OF EXERCISE

MAIL TO: ECI, GUNTER AFS AL 36118-5643

STUDENT REQUEST FOR ASSISTANCE

PRIVACY ACT STATEMENT

AUTHORITY: 10 USC 8012. PRINCIPAL PURPOSE: To provide student assistance as requested by individual students. ROUTINE USES: This form is shipped with ECI course package, and used by the student, as needed, to place an inquiry with ECI. DISCLOSURE: Voluntary. The information requested on this form is needed for expeditious handling of the student's inquiry. Failure to provide all information would result in slower action or inability to provide assistance to the student.

I. CORRECTED OR LATEST ENROLLMENT DATA

1. THIS REQUEST CONCERNS COURSE (1-6)	2. TODAY'S DATE	3. ENROLLMENT DATE	4. AUTOVON NUMBER

5. SOCIAL SECURITY NUMBER (7-15)	6. GRADE/RANK	7. NAME (First initial, second initial, last name)
___ - __ - ____		(17) ___ - (18) ___ - (19-32)

8. ADDRESS

OJT ENROLLEES: Address of unit training office with zip code.

ALL OTHERS: Current mailing address with zip code.

(33-53)

(54-75)

9. NAME OF BASE OR INSTALLATION IF NOT SHOWN ABOVE	10. TEST CONTROL OFFICE ZIP CODE/SHRED (33-39)

II. REQUEST FOR MATERIALS, RECORDS, OR SERVICE

X	*Place an 'X' through number in box to left of service requested.*
1	Request address change as indicated in Section I, Block 8.
2	Request Test Control Office change as indicated in Section I, Block 10.
3	Request name change/correction. *(Provide Old or Incorrect data here)*
4	Request Grade/Rank change/correction.
5	Correct SSAN. *(List incorrect SSAN here.)* *(Correct SSAN should be shown in Section I.)*
6	Extend course completion date *(Justify in "Remarks")*
7	Request enrollment cancellation. *(Justify in "Remarks")*
8	Send VRE answer sheets for Vol(s): 1 2 3 4 5 6 7 8 9 10 Originals were: [ ] Not received [ ] Lost [ ] Misused
9	Send course materials. *(Specify in "Remarks")* [ ] Not received [ ] Lost [ ] Damaged
10	Course exam not yet received. Final VRE submitted for grading on _____ (date).
11	Results for VRE Vol(s) 1 2 3 4 5 6 7 8 9 10 not yet received. Answer sheet(s) submitted _____ (date).
12	Results for CE not yet received. Answer sheet submitted to ECI on _____ (date).
13	Previous inquiry ([ ] ECI Fm 17, [ ] ltr, [ ] msg) sent to ECI on _____ (date).
14	Give instructional assistance as requested on reverse.
15	Other *(Explain fully in "Remarks")*

FOR ECI USE ONLY

G	16	33
K	VOL 33-35	GR 36-38
M	33-34	35-40
N	33-35	
P	VOL 33-35	
	TC 36-37	38
	DOE 39-45	
Q	33-34 ØØ	38 1
	MC 39-42	

REMARKS *(Continue on reverse)*

OJT STUDENTS must have their OJT Administrator certify this record.

ALL OTHER STUDENTS may certify their own requests.

I certify that the information on this form is accurate and that this request cannot be answered at this station.

SIGNATURE

ECI FORM DEC 84 17 PREVIOUS EDITION WILL BE USED.

REQUEST FOR INSTRUCTOR ASSISTANCE

NOTE: Questions or comments relating to the accuracy or currency of subject matter should be forwarded directly to preparing agency. For an immediate response to these questions, call or write the course author directly, using the AUTOVON number or address in the preface of each volume. All other inquiries concerning the course should be forwarded to ECI.

VRE ITEM QUESTIONED:

COURSE NO _____

VOLUME NO _____

VRE FORM NO _____

VRE ITEM NO _____

ANSWER YOU CHOSE _____ *(Letter)*

HAS VRE ANSWER SHEET BEEN SUBMITTED FOR GRADING?

☐ YES ☐ NO

REFERENCE

(Textual reference for the answer I chose can be found as shown below)

IN VOLUME NO _____

ON PAGE NO _____

IN ☐ LEFT ☐ RIGHT COLUMN

LINES _____ THROUGH _____

MY QUESTION IS:

REMARKS

ADDITIONAL FORMS 17 available from trainers, OJT and Education Offices, and ECI. Course workbooks have a Form 17 printed on the last page.

ECI FORM 17, DEC 84 *(Reverse)*

AU GAFS AL(863350)1.500

62230 02 8605

CDC 62230

APPRENTICE FOOD SERVICE SPECIALIST

(AFSC 62230)

Volume 2

Fundamentals of Food Service Equipment and Management

Extension Course Institute
Air University

Prepared by
SMSgt Kenneth F. Quesinberry, Jr.

Reviewed by
Betty Sue Jones

Edited by
Steven A. McCarver

3440TH TECHNICAL TRAINING GROUP (LOGISTICS)
3400TH TECHNICAL TRAINING WING (ATC)
LOWRY AIR FORCE BASE, COLORADO 80203-5000

EXTENSION COURSE INSTITUTE (AU)
GUNTER AIR FORCE STATION, ALABAMA 36118-5643

Preface

THIS VOLUME will teach you the fundamentals of food service equipment as well as food service management. The information in this volume will help you throughout your food service career through better job performance and upgrade testing.

Chapter 1 covers the operation and maintenance of state of the art food service equipment, safety practices in the kitchen, and energy conservation. Chapter 2 discusses the different types of food service activities, storeroom operations, and subsistence and accountable records. Also, the second chapter introduces the a la carte system (ALACS); the Armed Forces consumer level subsistence appraisal program; the fraud, waste, and abuse program; and covers functions of contract personnel and quality assurance evaluation. Chapter 3 deals with specialized feeding situations. It covers ground-support meals, flight–feeding operations, missile-site operations, and the Prime Ribs readiness program.

The information in Chapter 1 on first aid for choking was provided by Red Cross poster 1030 with permission.

Code numbers appearing on figures are for preparing agency identification only.

The inclusion of names of any specific commercial product, commodity, or service in this publication is for information purposes only and does not imply indorsement by the Air Force.

To get an *immediate response* to your questions concerning subject matter in this course, call the author at AV 926–3080 between 0700 and 1600 (MT), Monday through Friday. Otherwise, write the author at 3440th Technical Training Group, Lowry AFB CO 80203–5000, to point out technical errors you find in the text, Volume Review Exercises, or Course Examination. Sending subject matter questions to ECI slows the response time.

NOTE: Do not use the Suggestion Program to submit changes to this course.

Consult your education officer, training officer, or NCO if you have questions on course enrollment or administration, Your Key to a Successful Course, and irregularities (possible scoring errors, printing errors, etc.) on the Volume Review Exercises and Course Examination. Send questions these people can't answer to ECI, Gunter AFS AL 36118–5643, on ECI Form 17, Student Request for Assistance.

This volume is valued at 24 hours (8 points).

Material in this volume is reviewed annually for technical accuracy, adequacy, and currency. For SKT purposes the examinee should check the Index of ECI Study Reference Material to determine the correct references to study.

Contents

Operation and Maintenance of Food Service Equipment

IN THIS CHAPTER we will discuss the maintenance procedures and safety precautions to follow in the use of portable and fixed equipment and the rules for energy conservation in Air Force dining facilities. Your supervisor or trainer will furnish you with the necessary information for operating the equipment. These instructions may be in the form of a job qualification standard (JQS) or the manufacturer's instructions. It is to your advantage to learn the step-by-step procedures from the very beginning because most of your training will be conducted on these procedures. Never attempt to use a piece of mechanical equipment until you are basically familiar with its operating characteristics. When in doubt, seek the aid of your supervisor or trainer.

1-1. Food Service Equipment

Food service people depend on specialized equipment to help them in storing, preparing, cooking, and serving food. Although this equipment is designed to give efficient trouble-free service over a long period of time, improper operation and careless maintenance can result in an early breakdown, costly repairs, and, possibly, serious accidents.

In this section we will discuss portable equipment including handtools and utensils. Also, we will discuss fixed equipment that is usually power operated and installed on a more or less permanent basis.

200. State how to properly handle and care for handtools.

Handtools. Handtools or utensils are hand-operated items, including such necessary tools as knives, meat forks, scrapers, scoops, wire whips, and spatulas. Figure 1-1 shows some common handtools for serving. Many handtools are issued in different sizes and shapes to meet specific needs. There are right and wrong ways to use and maintain each tool.

Knives are classed as cutting, scraping, or chopping tools. Like other bladed tools, the cutting motion and the angle at which they are held increases or decreases their effectiveness. For example, after the first incision is made in carving meat, the angle at which the knife is held should never be altered, or jagged, uneven slices will result. Your trainer will explain and demonstrate knife handling techniques; however, only practice will enable you to attain and maintain proficiency.

Sharp knives are essential if you expect to do an efficient cutting job. You can keep knives sharp only if you use them properly; for example, do not misuse a knife by opening a can.

How knives are cleaned has a lot to do with keeping them in good condition. You should wash them in warm, soapy water; rinse and dry before storing them. Do not allow knives with wooden handles to stand in water. Water causes the wooden handles to swell and pull away from the shaft. Also, knives left in water could cause serious injury to an unsuspecting person. An important safety measure to follow when handling a knife is: if a knife falls, stand back; let it fall and then pick it up.

Meat forks, basting spoons, spatulas, cake turners, egg whips, potato mashers, vegetable graters, butter cutters, sieves, collanders, and can openers are considered miscellaneous equipment. As with other tools, there are right ways and wrong ways to use them. Handle them carefully and keep them clean. A brush and warm soapy water will do the trick. Store each piece in a definite storage place when it is not is use.

Cleaning Handtools. You will work with kettles, measures, dippers, pots, and pans of all descriptions. To keep them in good working order, you must clean them thoroughly after each use and store them properly. To clean, wash them in hot soapy water. Rinse in clear hot water and air dry. Store pots and pans in a dry place, bottoms up. Do not put one utensil inside another. A proper circulation of air is necessary to prevent rust.

Different kinds of metal require different care. Thus, it is important to identify the various metals so that you can apply proper cleaning agents and methods.

Stainless steel. Never use harsh scouring powders on stainless steel utensils.

Tin or plated metals. Avoid using harsh scouring powders when cleaning tin or plated metals. Hot soapy water is the most effective cleaning agent for each item. Never use sharp tools in scraping food from tin or plated metals. Such mistreatment can remove the coating and expose the base metal.

Aluminum. Do not clean aluminum utensils with soda, lye, or highly caustic washing powders. Discoloration of the metal will result. Hot soapy water will do the job perfectly.

When lifting or transporting heavy pots and pans, take time for safety. When pans are hot, use hot pads; when pans are heavy, have someone give you a hand.

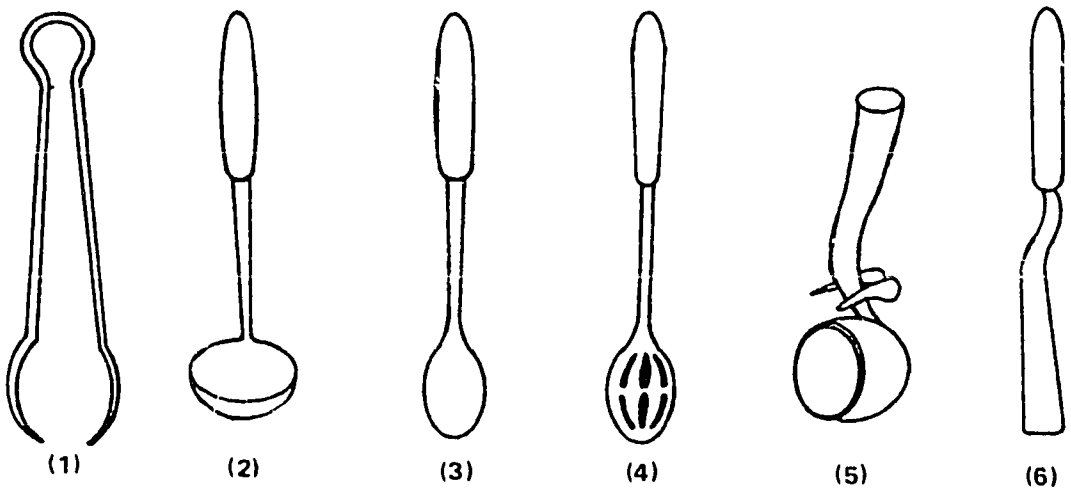

UTENSIL	USED FOR
1. FOOD TONGS (VARIOUS LENGTHS)	SOLID MEAT ITEMS (CHOPS, MEAT PATTIES, ROAST BEEF SLICES). SPAGHETTI AND NOODLES, STALK–TYPE VEGETABLES (BROCCOLI AND ASPARAGUS). LEAFY VEGETABLES (TOSSED SALAD, SPINACH, ETC.).
2. LADLE (1–OZ AND 4–OZ SIZES)	USE THE 1–OZ LADLE FOR GRAVIES AND SAUCES AND THE 4–OZ LADLE FOR SOUPS AND LIQUID–BASED FOODS.
3. SOLID SPOON	FOODS WHICH HAVE LIQUID SERVED WITH THEM (SWISS STEAK, BRAISED BEEF CREAMED CORN, ETC.).
4. SLOTTED SPOON	FOODS SERVED WITHOUT THE LIQUIDS (GREEN BEANS, PEAS, ETC.).
5. ICE CREAM SCOOP	FOODS OF MEDIUM CONSISTENCY (ICE CREAM, MASHED POTATOES, BREAD DRESSING).
6. SPATULA	FOODS SERVED FROM THE GRIDDLE (EGGS, FRENCH TOAST, PANCAKES, HAMBURGERS), AND FOOD ITEMS THAT TEND TO FALL APART (ENCHILADAS, STUFFED PORK CHOPS, TROUT).

37590

Figure 1–1. Hand tools.

Exercises (200):

1. What handtools are used in food service work?

2. Name two reasons why you should not leave knives in water.

3. Name the basic materials you should use to keep handtools clean.

4. What cleaning material and tools should you avoid when cleaning tin or plated metals? Why avoid such tools?

5. State the safety precautions you should follow when handling hot, heavy pans.

6. Why should you not store one utensil inside another?

201. State the proper use and care of cleaning equipment.

Cleaning Equipment. A wringer removes water from mops, and a bucket is the receptacle that catches and holds the water. A wringer consists of two long, round rollers that are set on a frame. The rollers are operated by two cogs on each side of the frame. Buckets may be different sizes and shapes.

Some scrub buckets have the wringer attached. To use this type, place the mop between the rollers and press your foot on the pedal to cause the rollers to move in on the mop. Hold the other foot on the foothold attached to the bottom of the bucket. Lift the mop handle straight up and remove the mop. When using buckets and wringers that are separate, place the wringer on the bucket by engaging the slot on the wringer over the edge of the bucket. Place the mop between the rollers, turn the latch on the wringer toward the inner part of the bucket, grasp the handle, and turn the handle clockwise. Repeat the process until all water has been removed from the mop. Release the latch on the wringer to remove the mop.

Clean the wringer and bucket after each use by placing a small amount of warm soapy water in the bucket and, holding the wringer over the bucket, scrub them both thoroughly with a brush. Then air dry them.

Other cleaning equipment includes scrub brushes, mops, brooms, and squeegees. The brushes vary in size and shape according to their purpose. To keep brushes, mops, brooms, and squeegees in good condition, clean them thoroughly after each use and store them properly. To clean brushes, mops, and squeegees, wash them in warm soapy water; then rinse in clear hot water and air dry. Mops should be hung with the heads down to prevent the dirty water from dripping down the handle. Clean used wipe cloths in bleach water. This keeps them sanitary and makes them acceptable to use again.

Exercises (201):

1. State the purposes of a scrub bucket and a wringer.

2. What are the procedures for cleaning a squeegee?

202. State operational procedures of dietetic scales.

Dietetic Scales. These scales are used to weigh food portions accurately. They are calibrated either in ounces and 1/4-ounce fractions or in gram graduation, as the one shown in figure 1-2.

This type of scale is easy to use. You merely place paper on the scale platform, set the dial so that the needle is on zero, and then place the food on the scale until the needle is in line with weight of the desired portion. This scale is an excellent way of ensuring good portion control specifically when preparing or serving meat entrees. Weighing the

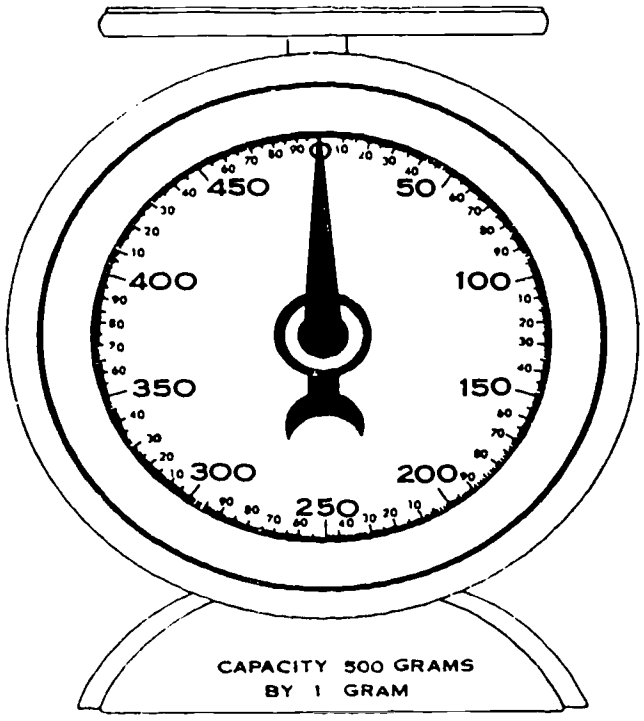

Figure 1-2. Dietetic scales.

meat entree for every fourth patron would ensure that each customer is getting the amount of meat called for in AFM 146-12, Vol. 1, *Armed Forces Recipe Service*, and AF Form 662, Food Service Production Log. Note that everytime an entree is weighed, a clean piece of paper should be used. After weighing it, the food portion can be transferred to the serving plate.

On most models you can remove the scale platform by lifting it straight up. It can be washed and sanitized with hot water and detergent. The body of the scale routinely should be wiped clean with a damp cloth. Like any scale, this scale can be knocked out of calibration (out of balance) if it is handled improperly. Always handle the scale with care and don't place it in areas where it can be easily bumped and knocked to the floor.

Exercises (202):

1. Why should you use a dietetic scale in your food service operation?

2. Why should you follow the procedure of weighing every fourth patron's meat entree?

3. What should you use to clean the dietetic scale platform?

203. State operation and maintenance procedures for a dishwasher.

Dishwashing Machine. There are two types of dishwashers in Air Force dining halls. One is equipped with a single tank and the other with a double tank. In this chapter, we will discuss the double-tank dishwasher because it is the one most commonly used in Air Force dining halls.

The dishwashing machine is used to wash and rinse eating utensils in a quick, efficient, and sanitary manner. It is located in a room or area specifically designated for dishwashing. This room or area should be well ventilated, properly drained, and free from interference of other activities.

Figure 1-3 gives you an illustration of a double-tank dishwashing machine. Before operation, close the drain valves (9), fill the tanks (8, 12) with water, turn on the heating unit, fill the machine with the proper amount of dishwashing compound, and start the machine. After dishes have been prewashed and placed on dishracks, feed the dishrack into the machine for washing and rinsing. Remove the dishes from the rack, then turn off the machine and the heating unit. Close the final rinse valve and drain the tanks before cleaning.

An efficient dishwashing system requires careful planning and design of the dish room, proper cleaning and maintenance scheduling, and thorough training of employees. Dishwashing can become the source of savings in time, labor, and energy.

Preventive maintenance and regular cleaning are essential to the continued satisfactory operation of

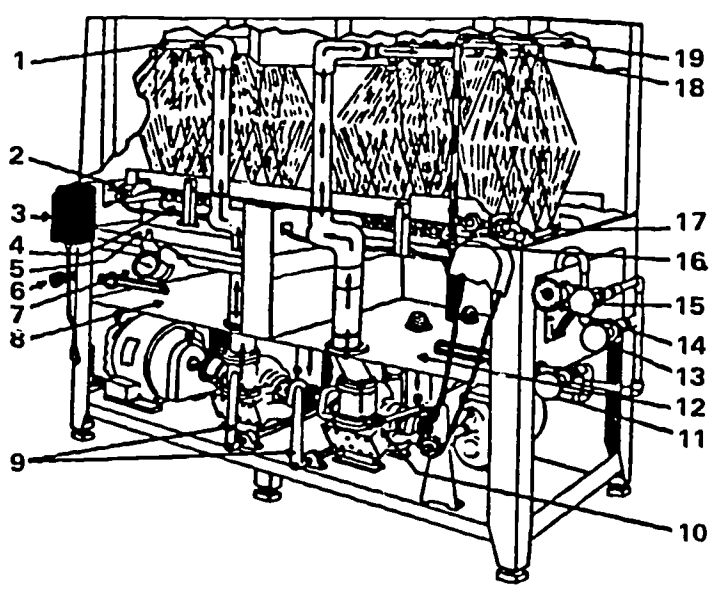

LEGEND:
1. UPPER WASH SPRAY TUBES.
2. DISH RACK GUIDE RAIL.
3. ELECTRICAL CONTROL BOX.
4. LOWER WASH SPRAY TUBES.
5. SCRAP TRAYS.
6. WASH TANK STEAM INJECTOR VALVE (STEAM HEATED).
7. WASH WATER THERMOMETER.
8. WASH TANK.
9. TANK DRAIN LEVERS.
10. CONVEYOR SPEED CONTROL LEVER.
11. RINSE TANK STEAM INJECTOR VALVE (STEAM HEATED).
12. RINSE TANK.
13. RINSE TANK HOT WATER VALVE.
14. RINSE TANK THERMOMETER.
15. FINAL RINSE HOT WATER VALVE.
16. LOWER RINSE SPRAY TUBES.
17. LOWER FINAL RINSE SPRAY TUBES.
18. UPPER RINSE SPRAY TUBES.
19. UPPER FINAL RINSE SPRAY TUBES.

NOTE:
A. WASH TANK HOT WATER VALVE NOT SHOWN, LOCATE ON WASH END OF MACHINE.
B. HEATING UNITS MAY BE GAS, STEAM OR ELECTRIC.

00901

Figure 1-3. Dishwashing machine.

dishwashing machines, as well as to meeting rigid sanitation standards. A cleaning and maintenance schedule should be worked out and posted near the warewashing machine for easy visibility. Ideally, responsibility for maintenance tasks should be delegated to one person whenever possible in order to reduce duplication of effort. This will result in better management and followthrough.

The following are some important cleaning and maintenance tips: Set equipment away from walls so that easy access may be had to all parts of it to allow for both cleaning and mechanical maintenance. The dishwashing machine should be flushed and thoroughly cleaned at the end of each meal period.

Remove and thoroughly clean all removable components inside the machine after each use. Food soils will buildup rapidly on the curtains and cause deterioration. In situations where machines are used almost 24 hours each day, it is recommended that two sets of curtains be provided and that they be used on alternate days, one set being permitted to dry out completely while the other is being used.

Empty scrap trays frequently, so that they will not interfere with the proper recirculation of the water. If trays are not in good repair and permit large scraps to enter the wash tank, the food scraps will be recirculated with the wash and rinse water, clog the jets in the wash and rinse arms, and interfere seriously with the proper washing action.

Keep overflow pipes from the various tanks clean and free of debris. A proper and continuous overflow from the wash and power-rinse tanks are essential to provide for the carry-off of excess detergent in the power-rinse tank and to prevent the accumulation of food, soil, and debris in the wash tank. A clogged overflow will permit the water level to rise to a point that will interfere with the proper action of the bottom wash arms or jets. Excessive food soils and grease in the wash tank will also require the use of additional quantities of detergent.

Keep wash and rinse jets clean and free of deposits and debris. Food scraps and bits of debris such as lettuce, paper, matches, and similar material can, through faulty prewashing operations and inadequate scrap trays, be carried into the wash water. When that happens, debris is recirculated in the wash water and clogs the wash jets, resulting in an inadequate wash job. Examine and thoroughly clean the wash and rinse jets after each period of peak use and, in the case of continuous operation of the machine, check them at least once each hour during heavy operation. Make routine inspection of the final rinse jets or nozzles to ensure that they are not materially reduced in size due to mineral buildup.

Mineral deposits from the water supply will interfere with the machine's effectiveness. Heavy liming will clog wash and rinse jets, and will seriously reduce the quantity of water being delivered to the machine. Even where minimum hardness does not indicate the need for softening of the water supply, liming will often be experienced due to high water temperatures used in warewashing machines. These lime deposits create rough surfaces within the machine that provide breeding places for bacteria and make cleaning difficult. In addition, the lime deposits can alter the shape of the water and rinse spray jets and drastically change the washing efficiency of the machine. Inorganic acids, such as muriatic acid, should not be used for cleaning or deliming. Safe acid cleaners, which can be circulated in the machine to remove lime deposits, are available. This procedure should be followed as often as necessary to keep the machine free of deposits.

Check the automatic detergent dispenser regularly and adjust when necessary to keep it clean and functioning properly.

Follow guidance on equipment lubrication as outlined in manufacturer's instructions.

Before operating a dishwashing machine, you should check it for cleanliness and see that it is put together properly. When operating the machine, keep your hands away from all moving parts; keep water away from the motor and other electrical equipment; be sure the water is at the proper level in the tanks before turning on the heat; and always turn off the heat before draining the tanks.

Temperature control of the water used in the warewashing operation is of utmost importance for cleaning, proper sanitation, and energy conservation.

The data plate on the dishwashing machine should specify:

a. The required wash water temperature in the tank.
b. The required final rinse water temperature.
c. The optimum final rinse temperature.
d. If applicable, the required pumped rinse water temperature in the tank.
e. The maximum conveyor speed.
f. The chemical type concentration of sanitizer to be used.

Individual thermometers should be on the machine to show the temperature of the water in all tanks, as well as the temperature of the final rinse water. An automatic thermostatic control will control the temperature in the wash and pumped rinse tanks. Thermometers should be checked occasionally for an accuracy of ± 3°F of the required temperatures.

A final sanitizing rinse temperature of 180°F is required in warewashing operations. Most operations use a booster water heater to supply the 180°F water. When the booster water heater is located farther than 5 feet from the point of use of the water at the machine, mechanical recirculation of the hot water to the machine must be provided. The 180°F hot water supply lines should be kept as short as possible (to reduce heat loss), insulated, and should not be used as a supply line for any other purpose. The recirculation pump must be in operation at all times that the dishwashing machine is in operation to ensure an adequate supply of fresh rinse water at the proper temperature.

The temperature of the wash water is extremely significant in providing effective sanitizing of tableware. Wash temperatures less than those prescribed will result in ineffective sanitation, even when the final rinse temperature is properly maintained. This is due to the cumulative temperature effects of the wash, power rinse (if applicable), and the final rinse water to make certain that the tableware reaches a temperature high enough to ensure proper sanitization (161°F). The wash temperature in a single tank conveyor machine must be a minimum of 160°F. In

stationary rack machines having longer washing cycles, or in multiple tank conveyor machines, wash temperatures may be permitted at 150°F.

Although water temperatures must be kept high enough for sanitation, it is also important that the temperature of the rinse water in the freshwater rinse line not be allowed to exceed 195°F. Above this temperature water tends to steam and vaporize when released from pressure in the lines, thus dissipating the heat before it reaches the surface of the utensils. This also wastes energy and releases more heat to the room than is necessary.

The water pressure should be between 15 and 25 pounds per square inch (psi) on the freshwater rinse line at the machine. If the pressure falls, the volume of water delivered per unit of time is reduced. An excessive pressure will result in excessive water used and, as a rule, unsatisfactory temperature control. Pressures should be checked periodically with a properly calibrated gauge and the necessary adaptive fitting.

The proper planning and construction of the dish room is important to employee morale as well as to the overall operation of a successful warewashing system.

The constant operation of the dishwashing machine introduces a great deal of steam and heat into the dish room. It is necessary that this steam be removed, preferably by mechanical exhaust ventilation directly above the machine although general room ventilation may be used. In any case, the system must be adequate to eliminate steam and vapors. Excessive ventilation, however, is detrimental in that wash power-rinse and final-rinse temperatures may be negatively affected and energy wasted.

Dishwashing machine operators should be properly trained in the cleaning and sanitizing of tableware and aware of the public heath hazard of improperly washed dishes.

Exercises (203):

1. What are the steps to perform before starting a dishwasher?

2. When should the dishwashing machine be flushed and thoroughly cleaned?

3. If the dishwashing machine is in continuous operation, how often should the wash and rinse jets be examined during heavy use?

4. Which mineral deposits from the water supply will interfere with the machine's effectiveness?

5. What information is on the dishwashing machine data plate?

6. The final rinse water should not exceed what temperature?

7. The water pressure should be between what pounds per square inch?

204. State the operation and maintenance procedures for a steam table and list the safety precautions to follow during its use.

Steam Table. A steam table is designed to keep food at the proper temperature for short periods of time during serving and to attractively display food.

In heating a steam table, three types of heating systems are used: steam, gas, and electric. Typical examples of the steam-operated steam tables are shown in figure 1-4.

To operate the steam table, fill it with water and heat the water to the desired temperature. Temperatures higher than 180°F dry food more rapidly and waste both fuel and food.

After serving the food, turn off the heating element, drain the water, and clean the inside of the compartment of all food particles. Use a scrub brush with cleaning powder and hot water. Check for cleanliness, then refill the compartment with water and check for leakage before serving meals.

Failure to observe safety precautions can be a dangerous practice. You may injure yourself or damage the equipment. Some of the precautions to follow are to:

- Inspect joints, connections, seams, and heating units for leaks before each use.
- Never turn on the heating unit until the compartment is partially filled with water.
- Keep the floor around the steam table dry and free of grease to prevent accidents.
- Always use the overflow pipe to prevent water from overflowing the steam table. Be sure the pipe is not stopped up.

Exercises (204):

1. What are the basic procedures for operating the steam table?

2. Give the steps in cleaning the steam table?

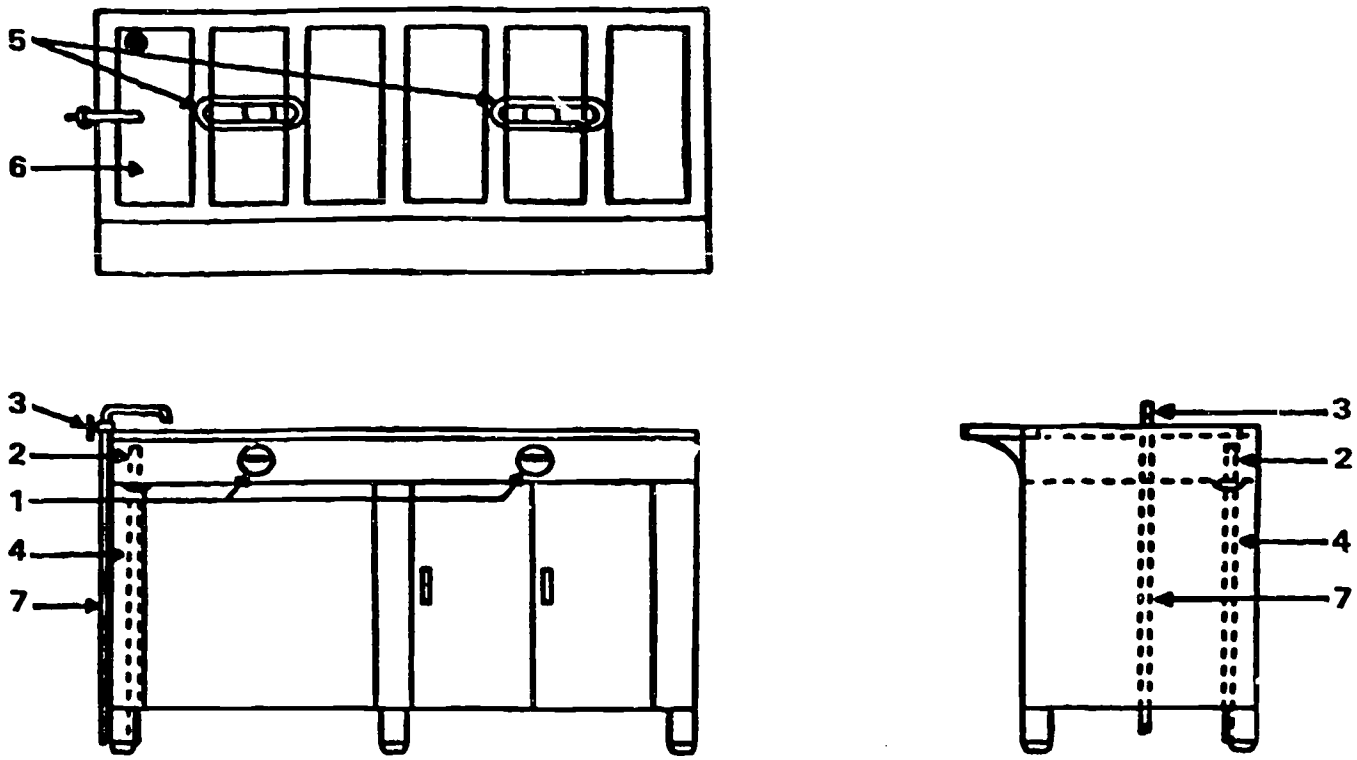

LEGEND:
1. HEAT CONTROL SWITCHES.
2. OVERFLOW PIPES.
3. WATER FAUCET.
4. WATER DRAIN.
5. HEATING ELEMENTS.
6. INSERT OPENING.
7. WATER PIPE.

Figure 1–4. Steam table.

3. List the safety precautions for using the steam table.

4. What is the proper temperature of the water in the steam table?

5. What item inside of the steam table compartment must always be covered with water?

205. State how to operate and maintain the compartment steam cooker and compartment jet cooker.

Compartment Steam Cooker. This appliance is primarily designed to provide well-cooked palatable foods in the shortest possible time and with minimum loss of vitamins. Originally it was designed for vegetable cooking only, but experiments have demonstrated that it is equally useful for cooking hams, roasts, poultry, and seafoods. The steam cooker consists of an insulated body equipped with shelves to hold several solid or perforated baskets in which the food is placed. These are shown in figure 1-5. This steam cooker has three compartments although there are models that have two compartments. Tight-fitting doors retain the pressure and prevent the escape of cooking odors. Every steam cooker has various control valves and an inlet pressure gauge. Normally the compartment steam cooker is placed in line with or near the steam-jacketed kettles and near a floor drain.

When you use the vertical steamer, prepare your vegetables, fruits, meats, fish, and poultry the same way you would for cooking on a range. Place root and leafy vegetables, fruits, meats, and poultry in perforated baskets if you do not want to save the juices. Never use perforated baskets if the broth is to be served. To save the broth, use standard steam table pans or other solid pans of suitable size.

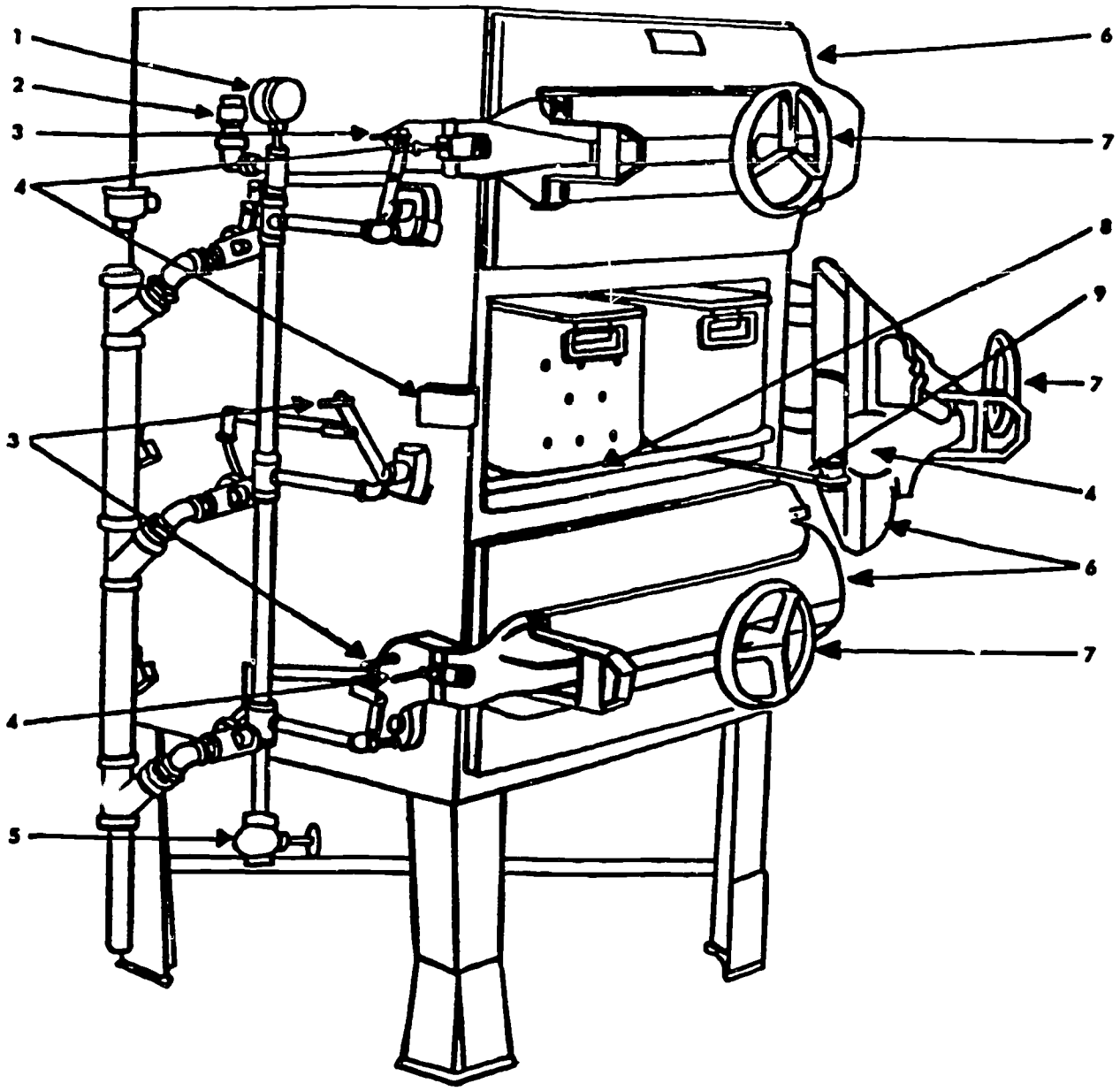

LEGEND:
1. STEAM PRESSURE GAUGE.
2. SAFETY VALVE.
3. COMPARTMENT STEAM VALVE CONTROL HANDLE.
4. DOOR LOCKING DEVICE.
5. MAIN STEAM INLET VALVE.
6. COMPARTMENT DOORS.
7. DOOR TENSION WHEEL.
8. SLIDING SHELF.
9. SHELF LINKAGE ATTACHMENT.

00924

Figure 1–5. Compartment steam cooker.

Since much time can be saved by cooking small quantities, keep the baskets less than three fourths full. Never pack the baskets or pans, because the food in the center will not cook properly if the steam cannot circulate through the utensil. Various foods can be cooked in different compartments of the cooker at the same time without mixing flavors since each compartment is an entirely separate cooking chamber.

Notice the sliding shelf in the center compartment of the steamer shown in figure 1-5. To use the steamer, put the loaded baskets on this pullout shelf. After the compartments have been loaded, close and tighten the doors. Admit the steam by opening the steam valve. Always check the pressure gauge to see that the steam is entering the chamber properly, and make note of the required cooking time as outlined in the recipe used.

When the cooking process is completed, turn the steam supply off and remove the cooked product from the compartment. Clean out the compartments. Never let food remain on the walls or the bottom of the compartment because other foods may become contaminated.

To get good service from a vertical steamer, you must clean it thoroughly after each day's operation. Wash the inside and outside with hot soapy water and then rinse with clear water. Remove the sediment from the bottom of each compartment. Remove the shelves frequently to see that the drains are clear. If the steamer has automatic pullout shelves, remove the shelves by lifting the drawbar off the pin on the bracket attached to the door. The inside of the compartment can then be washed easily. Leave the compartment doors open when not in use to permit compartments to air out and to prevent door gaskets from adhering to compartments. Never tighten door wheels or handles excessively because this wears out the door gaskets quickly. Use just enough force to seal the joint. Never obstruct or tamper with safety valves. Close and tighten doors before turning on live steam. Never attempt to open doors while live steam is on. After live steam is turned off, loosen the doors enough to release the pressure. Stand at the hinge side of the door when opening it to avoid escaping steam. Check the gauge frequently while the steamer is in operation. Never let the pressure exceed the manufacturer's recommended safe pressure.

Jet Cooker. The jet cooker (fig. 1-6) is a single compartment steam pressure cooker that is used for fast volume cooking or preparation of individual servings. The cooking process for frozen, thawed, refrigerated, or fresh foods is usually controlled by an automatic defrost cycle in addition to a pressure-delayed timer action. The actual cooking process is achieved by contact of dry steam directly on the food. During the automatic defrost cycle and at the end of the cooking cycle, moisture and steam pressure are exhausted through a valve and routed to an open floor drain. The manufacturer's handbook will have the times it will take to cook certain foods.

Use the following operating procedures to assure a proper cooking cycle. It is especially IMPORTANT that proper operation of door instructions be followed:

a. Turn on the steam supply at the inlet valve.

b. Turn on the main switch. The pilot lamp will glow.

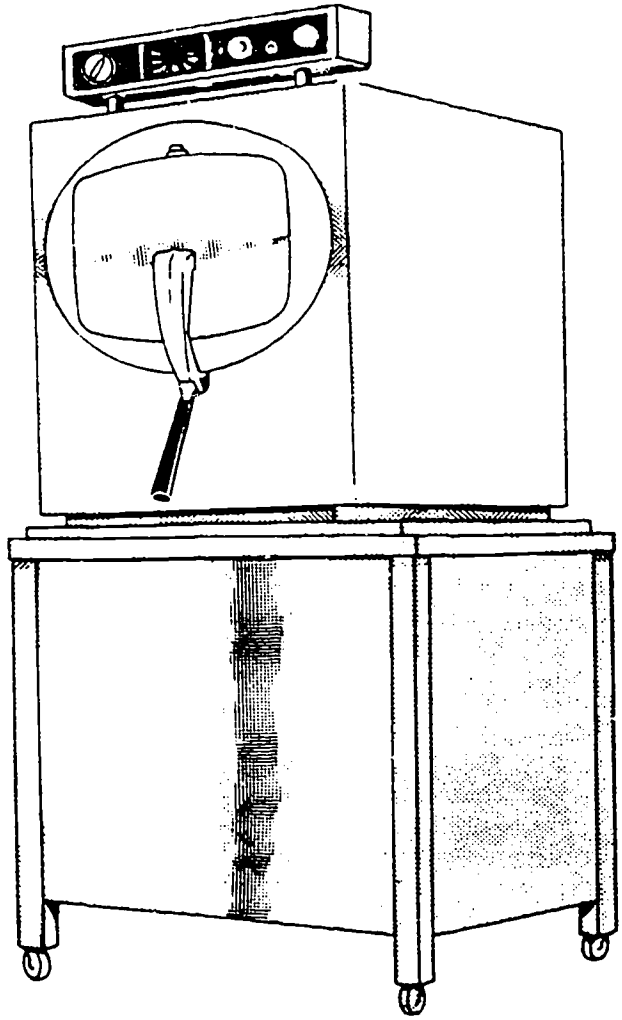

13272

Figure 1–6. Jet cooker.

c. Open the door by swinging the handle to the UNLOCKED position and sliding the entire door assembly to the right until the left edge of the door clears the cooker opening. Swing the door out and open.

d. Place the food in the cooker pan (furnished) on the top of the pan strainer. Do not use water except with dehydrated foods. Place the pan into the cooking compartment.

e. Swing the door assembly toward the closed position until the left edge clears the compartment rim. With the door handle still in the UNLOCKED position, slide the door to the right and into the compartment. Swing the door handle straight out to the LATCHED position ("center up" door; never force into place).

f. Prior to locking the door, start the timer by turning the timer knob clockwise past the 3-minute mark; then set the knob to the desired cooking time.

g. Swing the door handle to the LOCKED position against the cross arm.

NOTE: After the timer has been set to the desired time, frozen food will defrost before the timer starts. When the steam reaches the proper pressure (indicated on steam gauge) the timer will start.

h. When the timer cycle is completed, steam pressure in the compartment automatically drops to zero (indicated on steam gauge). The door should be opened *immediately* and food removed to prevent possible overcooking.

NOTE: If the cooker is allowed to cool, turn on the timer for 2 to 4 seconds to purge any moisture that may have formed.

To get good service from your jet cooker, you must make sure that it is thoroughly cleaned after each day's use. The same cleaning procedures that apply for the vertical steamer apply here. Wash the inside and outside with hot soapy water and then rinse with clear water. Leave the compartment door open when not in use to air out and prevent the door gasket from adhering to the compartment. Never stand directly in front of the jet cooker—always stand off to the side when opening to avoid live steam. Never try to open the door while live steam is on. Check the gauge frequently and never let the steam pressure exceed the recommended manufacturer's safety level.

Exercises (205):

1. Why can various foods be cooked in different compartments of the steamer without mixing flavors?

2. What materials are used to clean the inside of the steamer?

3. Why should you stand at the hinged side of the steamer door when you open it?

4. What two factors control the cooking process of a jet cooker?

5. How is the cooking process achieved in a jet cooker?

6. How is a jet cooker cleaned?

206. State how to operate and maintain the steam-jacketed kettle.

Steam-Jacketed Kettle. A steam-jacketed kettle is used to cook large quantities of food quickly and efficiently. To do this, steam is circulated between an inner and outer shell, producing an even distribution of heat for cooking. Steam-jacketed kettles are constructed of aluminum or stainless steel and are built to withstand 15 to 40 pounds of steam pressure. Sizes are determined by the capacity in gallons—20, 40, 60, and 80. The 40- and 60-gallon sizes are used in Air Force dining halls.

The kettle sits on a triple tubular-leg stand with floor flanges, as shown in figure 1-7, or on a pedestal. The kettle has a sanitary drawoff faucet, safety valve, and a hinged cover. Above each kettle is a water line and faucet for adding water. The kettle is installed in a recessed area or in an area with a raised masonry floor and tiled curbing. The floor is pitched to drain. A removal strainer in the bottom of the kettle prevents particles of food from draining into the drawoff pipe.

There is also a tilting or trunnion kettle, (fig. 1-8). The tilting models have a lip for pouring. These tilting kettles are excellent for progressive or batch cooking.

Steam-jacketed kettles can be dangerous equipment if not handled properly. Never turn on the heat unless water or food is in the kettle. The kettle may crack because of contraction when cold food or water is put into the hot, dry kettle. This may cause leaks. When the contents of the kettle are cooked, close the steam supply valve and remove the cooked product.

Clean the kettle very carefully after each use. No matter what kind or size of steam-jacketed kettle you have in your dining hall, you must carefully remove the clogged strainer, empty it, then wash and rinse it thoroughly. Then let the strainer air dry. Remove any food particles from the drawoff pipe and valves with a rod that has a flexible wire brush. Wash the interior of the kettle with soap and water. Use soap and a stiff brush if spots appear on the cover of the kettle wall. Rinse the kettle and allow it to air dry. Wipe with a cloth.

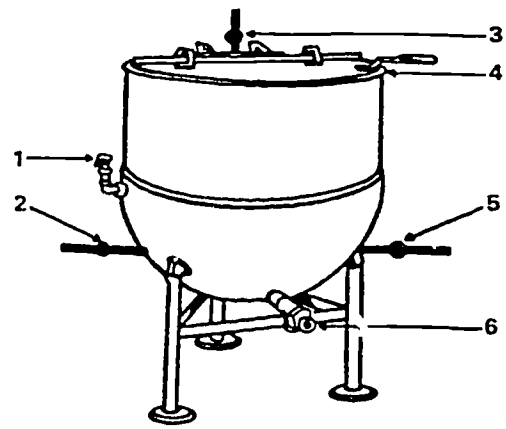

LEGEND:
1. SAFETY VALVE AND TRAPPED AIR RELEASE.
2. STEAM OUTLET VALVE.
3. WATER INLET VALVE.
4. LID.
5. STEAM INLET VALVE.
6. DRAW-OFF FAUCET.

NOTE: STRAINER NOT SHOWN, IT IS LOCATED INSIDE OF KETTLE, INSERTED IN DRAIN OPENING.

00902

Figure 1–7. Steam-jacketed kettle.

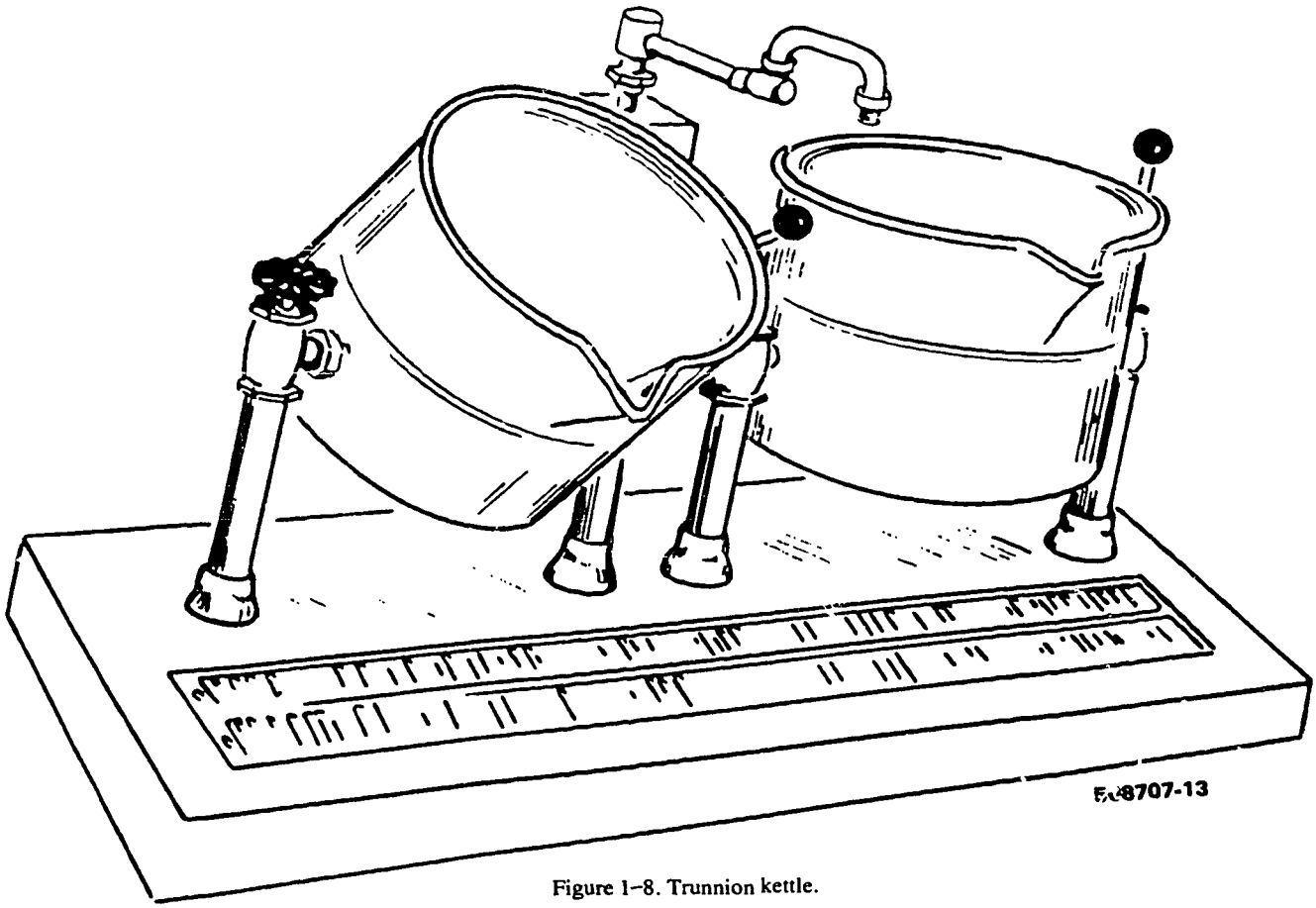

Figure 1–8. Trunnion kettle.

As you know, the civil engineering people perform the maintenance on your equipment. Nevertheless, there are many things that you can do to eliminate the need for extensive maintenance and to keep safe working conditions. Leave the cover open when the kettle is not in use. Inspect the steam pressure and see that there are no steam leaks in the fittings, piping, or valves. Lift the safety valve regularly to make certain that the disc is not sticking to its seat. Always open the steam outlet valve on direct-connected models before turning on the steam valve. Open the steam inlet valve a little at a time, and do not open it fully until all cracking noise has stopped. Do not turn on the steam unless water or food is in the kettle. Always open the safety valve to let trapped air escape. Check on steam leaks and operating pressure. Stand to one side of the kettle as you open the cover to avoid escaping steam. On all self-generating gas or electrically heated steam kettles, follow the manufacturer's instructions. Make sure the self-generated steam kettle contains water before turning on the heat. Do not put water in a hot, dry kettle.

Exercises (206):

1. What will happen if an empty kettle is allowed to heat?
2. What tool is used to remove food particles from the drawoff pipe and valves?
3. List the safety precautions to follow when using the steam kettle.

207. State operation and maintenance procedures for a range and list the safety precautions involved in its use.

Range. The ranges in Air Force dining halls are designed to cook, roast, and bake all types of food and liquids by an efficient heat-controlled method. The ranges are centrally located in the kitchen, close to other equipment.

Gas-fired ranges (fig. 1-9) are equipped with a pilot light that burns constantly after being lighted. On some ranges it is used to ignite burners automatically when gas is turned on to the burners. On other models the lighting is controlled manually by pushing a button (4) that increases the gas flow and forces the flame to the burners after you turn the gas on.

You might think everyone knows how to light a gas burner. There are, however, some important things to

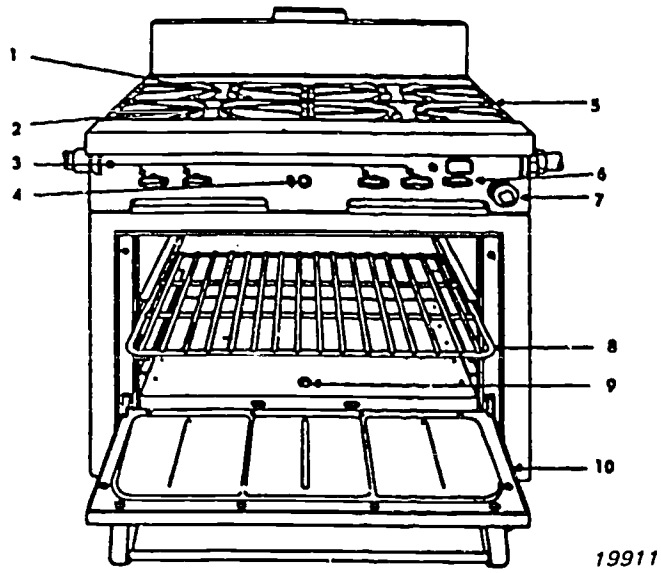

1. Pilot burner
2. Gas burner
3. Gas burner valves
4. Pilot burner button
5. Open top grates
6. Oven burner valve
7. Thermostat
8. Grate
9. Oven lighting porthole
10. Oven door

Figure 1–9. Gas-fired range.

remember that will help make the job easier and safer. When the gas-heated range is not equipped with a pilot light, hold a burning match over the burner with one hand. With the other hand, slowly open the control or gas cock until the burner is lighted. If the gas does not ignite the instant the gas is turned on, the mixing tube and burner are full of air. The pressure of the gas should force the air through the tube, and then the burner will ignite. This delay is particularly noticeable if the burners have long mixing tubes.

You should clean the range after every meal. Doing so will prevent grease and spilled food from accumulating. Remove the encrusted matter on the top of the stove and the grids with scrapers and a wire brush. Wash the grids with hot water and soap. Never use water or a damp cloth inside a hot oven. The water could heat up enough to warp the bottom of the oven, and the water in the damp cloth could heat up enough to burn your hand. Wipe the inside with a cloth and scrape off hardened material with a wire brush.

In addition to keeping the range in good shape, you should keep yourself in good shape. Here are a few tips for doing so:

- Keep your hands and arms away from open flames.
- Always make sure that the oven pilot is lit and the burner is burning before closing the door.
- Always use hot pads when handling hot pots and pans.
- Don't let foods spill over when removing pots from the top of the range.

Exercises (207):

1. When you are lighting the burner and there is a delay, what is probably the problem?

2. How often should you clean the range?

3. Name three safety precautions to observe when using the range.

208. Cite important uses of the tilting fry pan and the items used to clean it.

Tilt Grill. This piece of equipment (fig. 1-10) can be used more often and in more different ways than any other piece of cooking equipment in the kitchen. It can be used as a range, frying pan, griddle, boiler, deep-fat fryer, sauté pan, or kettle.

The grill's even heat pattern, its convenient working height, and the contoured lip and tilting mechanism make this an excellent piece of equipment to work with. The tilting concept eliminates ladling, heavy lifting, and possible spillage. Food can be transferred directly to the serving pan.

The tilt grill may be a counter model, floor model, wall-mounted model, mounted on modular cabinet base, or mounted on casters to expedite mobility between the kitchen and serving area. If it is new, make sure that the protective grease film applied at the factory is completely cleaned off. Do not connect it to a power outlet until you have checked the electrical data on the nameplate. If you operate the tilt grill on the wrong voltage, malfunction may occur.

Some models are equipped with a power ON/OFF switch, others are activated by the thermostat control. Models with a power ON/OFF switch have a separate signal light that will glow whenever the power is on. The thermostat signal light glows only while the unit is preheating or cycling.

The temperature range on a tilt grill is from 100 to 450°F. Some models will automatically shutdown by tripping the circuit breaker at temperatures above 450°F. To reactivate, simply operate the reset button (or switch) provided on the control console.

Always turn the power off at the end of each cooking day. This rule applies to all electric equipment.

Preheating. A tilting fry pan should be preheated to the recommended temperature for all cooking processes except boiling. Permit the unit to cycle (thermostat signal light flashing on and off) for more satisfactory results.

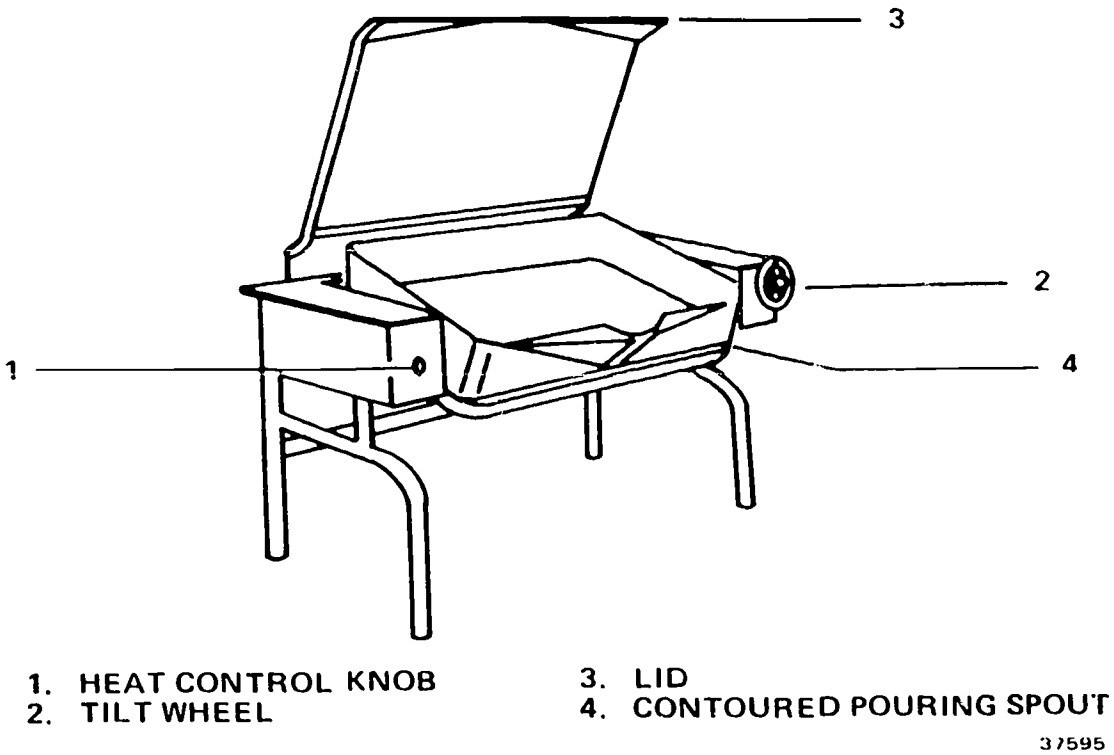

Figure 1–10. Tilt grill.

The following temperatures are suggested for key cooking processes:

Simmering	200°F (maximum)
Sauteing	225 to 275°F
Searing	300 to 350°F
Frying	325 to 375°F
Grilling	350 to 425°F

Simmering must be held at 200°F or boiling (evaporation) will occur.

For milk-based products 200°F is recommended to prevent scorching. Lower temperatures will prevent thickening.

Experience will show that some items should be started at a high temperature and then reduced to permit sealing in juices for about 20 percent of the time and cooking for the remaining 80 percent.

Two different foods can be prepared at the same time. Just place two pans on the tilt grill and heat the pans with the food in them. (Removable guide pans are featured on some models. Check manufacturer's instructions.)

Best Use of Cover. The tilt grill cover should be closed for simmering and boiling. Foods such as pork, veal, and lamb chops should be started with the cover open for browning. After the desired browning, put the cover on and continue cooking. Liver is excellent cooked with the cover closed.

Pot-roasting beef is best done by browning 6 to 8 pound pieces with the cover raised. After well browned, add beef stock and flour seasoning. Then close the cover and continue cooking at reduced heat until done.

Flavorful stews are easily prepared by browning small pieces of meat, then adding beef stock, water, and vegetables for cooking with the cover closed.

Because your tilting grill is in use for a wide variety of foods—for breakfast, lunch, and dinner service—clean it as soon as possible after each use. Before starting to clean, make sure that the power is off; then follow this recommended procedure: Flush the pan thoroughly with lukewarm water, then drain to remove as much loose soil as possible.

For an average soil, use a cleaning solution of 1 ounce of recommended cleanser to 3 gallons of hot water. Thoroughly brush all parts, including pouring lip, that touch or are splashed by food, particularly underside of the cover. (Use a fiber-bristled brush.)

For cooked-on or hardened soil, use a solution of 1 ounce of cleanser to 2 gallons of hot water. Soak for at least 30 minutes, making sure that the cleaning solution covers the highest food soil rings. Additionally, you should brush and clean all exterior surfaces. Use cleaning solution from the pan. Rinse well. Flush the entire unit with clear lukewarm water.

NOTE: To prevent development of undesirable odors and flavors, rinse the pan with a solution of a recommended sanitizing agent, then drain. Spray or fog inner surfaces with clear water to rinse. Keep cover closed until ready to resume cooking.

For mineral deposits and film caused by hard water and resistant food residues, let pan cool until cold to touch, then clean inside and outside with a recommended solution. It

may be necessary to soak the deposits well before scrubbing them off with a brush. In hard water areas, this procedure should be carried out weekly.

NOTE: Never use steelwool, metal sponges, or scouring powders when cleaning your tilting grill. The resulting scratches, no matter how minute, will shorten the life of the equipment, detract from its appearance, make subsequent cleaning increasingly difficult, and harbor bacteria that will multiply and lead to food contamination.

Exercises (208):

1. What is the temperature range on a tilt grill?

2. List five ways the tilt grill can cook food.

3. If the tilt grill is new, what should you do before using it?

4. Explain how to clean off average soil in a tilt grill.

5. In what two cooking methods should the cover for a tilt grill be closed?

209. State the operation and maintenance procedures of roasting and convection ovens.

Roasting Ovens. A cooking or roasting oven is designed specifically to bake or roast foods under sanitary conditions by regulated heat. The two main fuels used for heating the ovens are gas and electricity. The two types of ovens most commonly used by the Air Force are (1) sectional or stack ovens, and (2) conventional ovens. You can see in figure 1-11 that each of the sectional ovens has its own burner compartment, thermostat, and controls. Each oven can be set at a different temperature and can be used for either baking or roasting.

The individual compartments of stack ovens are placed one above the other. All are heated by the same heating unit and are at the same temperature. The sectional ovens are centrally located in the kitchen, adjacent to the other equipment and within easy access to the serving line.

Open the oven door on the gas oven 10 minutes before lighting to clear away any accumulated gas. Do this as a safety precaution. Open the burner compartment door, light a match or other lighting agent, and hold the flame to the pilot burner or the top oven burner. Turn the temperature control dial clockwise to approximately 250°F and open the gas valve to the ON position. The pilot light and oven burner should ignite simultaneously. Be sure that the pilot and oven burners are completely ignited. Close the compartment door. Turn the thermostat dial clockwise to the temperature required and allow the oven to preheat for approximately 10 minutes. You will learn the exact time required through experience.

To make oven cleaning a less distasteful job, remove boilover and spillover material before it has time to carbonize. Daily, when the oven is cool, wipe the interior with a damp cloth. Scrape the bottom if necessary. Never throw water on oven decks to clean them. To do so could cause warping. Swab with a damp cloth on a mop handle. After each use, remove grids, wash thoroughly, rinse, and air dry.

Following the suggestions given below will reduce maintenance work on the ovens and protect both equipment and personnel.

- Leave oven doors open to completely air-dry the interior of the oven.
- Turn on the heating element for 5 minutes to help dry the oven.
- When using the oven, never close the oven door without checking to make sure the gas is lit.
- Wipe up spilled grease immediately, because grease can create a fire hazard.
- Before lighting the oven, leave the oven door open for 10 minutes to allow gas fumes to escape.
- Never wash the oven while it is hot because this causes warping.
- Use dry cloths to protect your hands and grasp pans with both hands when removing them from the oven.

Convection Ovens. The convection oven (fig. 1-12) has added a new dimension to bulk cookery. It can turn out substantially more food in about 30 percent less floor space than a standard deck oven. The motor-powered blower in a convection oven constantly circulates heated air across and around racked food. This action accelerates heat absorption, shortens cooking time for most foods, and lowers cooking temperatures by about 50° for conventional foods of the same density. Roasting meats, for example, at lower temperatures helps reduce shrinkage, promoting significant economies. The convection oven is versatile, it can be used to roast, bake, reheat, and will accept standard pans or convenience foil packages.

There are a wide number of makes, sizes, and types of connection ovens. For ease of reference, we will refer primarily to standard six-rack models. Even so, the directions that follow are of a general nature designed to provide a helpful guide to successful convection oven operation. For specific instructions on your convection oven, study and use the manual issued by the individual manufacturer.

The standard six-rack oven is, in many models, adjustable to hold up to 11 racks. Single-oven sections may be mounted on legs, a storage stand, or a cabinet base. Two sections may be decked. Some feature vertical doors; others favor the horizontal [illegible]. The control panel on your convection oven is equipped with the following:

a. Main control switch (for on and off power supply). Some models may have a light to indicate when the power is on.

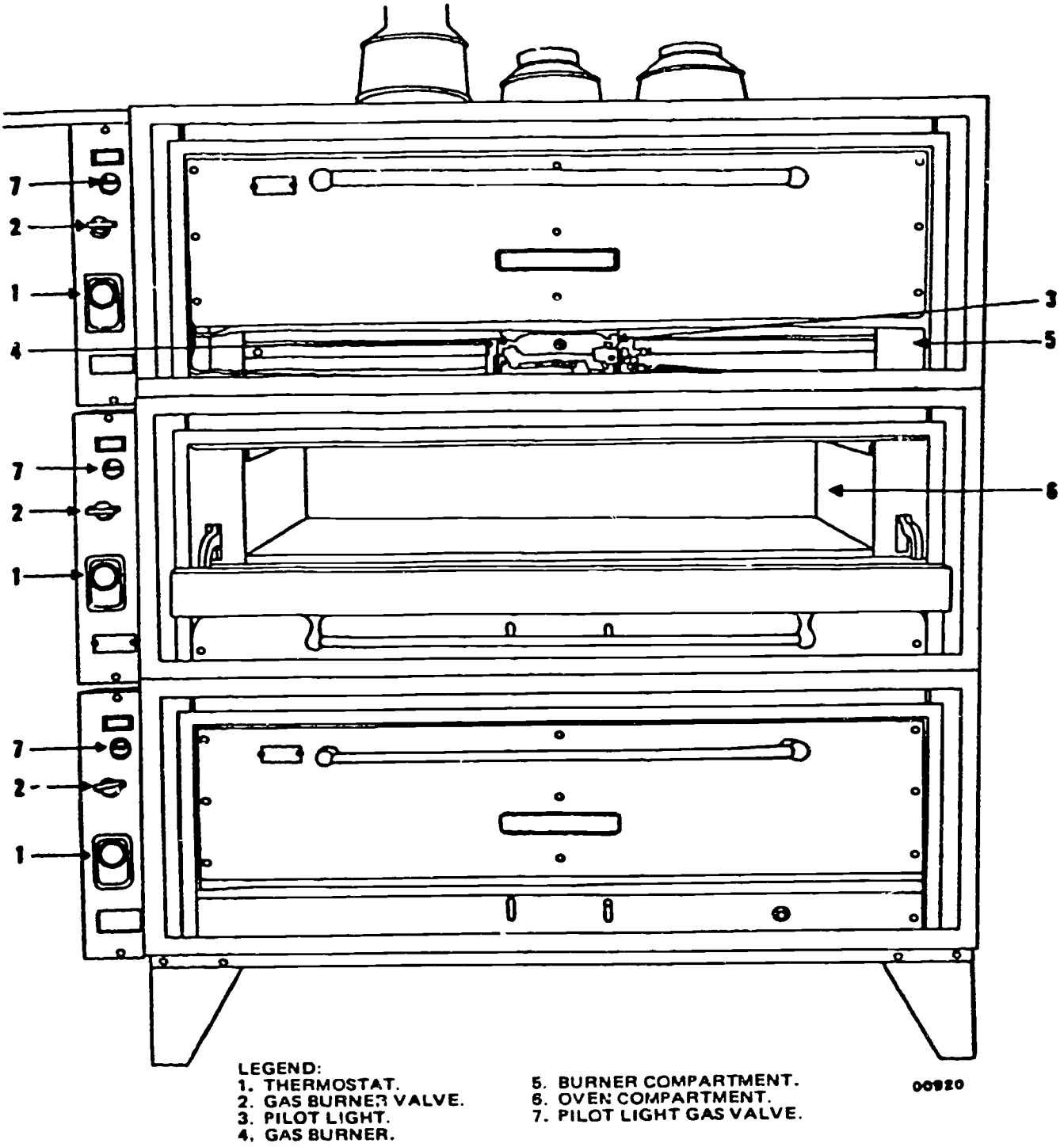

Figure 1-11. Roasting ovens.

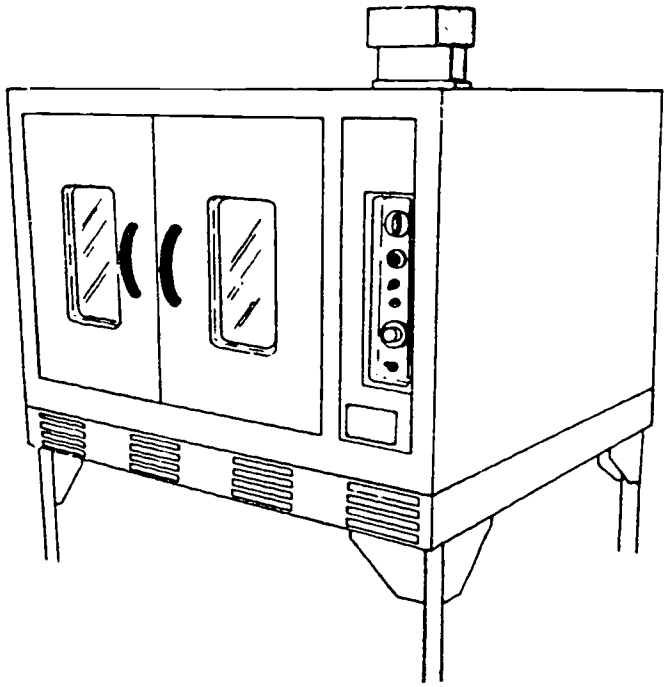

13275

Figure 1–12. Convection oven.

b. A thermostat dial, ranging up to 500°F, that controls the temperature.

c. Interior light switch.

d. Vent control (on during preheat, off when set temperature is reached).

e. Signal light (on during preheat, off when set temperature is reached).

f. Load control (on some models) governs the amount of heat and time it will take to return to the selected thermostat setting with a specific load.

g. Timer dial for 60 minutes. Additionally, some models feature a 5-hour timer.

NOTE: In most models, the oven works only with the power on and the doors closed; the oven de-energizes automatically when the doors are open. However, some models feature an independent blower switch to permit cooling of oven with doors open, and a motor-reset button if the fan should stop through electrical overload.

The operating instructions for a convection oven differ somewhat from a stack or roasting oven. Below are the standard operating procedures:

a. Position the racks according to the cooking load to be prepared.

b. Snap ON the power switch with the doors open on models with an independent blower switch. If the blower starts, press the blower switch so that it operates only when the doors are closed. On all other models, close the doors before snapping ON the power switch.

c. Set the thermostat dial to the required temperature. The light will go on. You can now preheat the oven in 10 to 15 minutes to reach temperatures from 300 to 400°F. Preheat with the load control set at high, if so equipped.

The oven should not be loaded for baking until the signal light has flashed off and on at least twice.

d. To preheat for baking, set the temperature 50°F higher than needed to compensate for heat loss when opening the doors for loading. Adjust to the correct temperature after loading. Then set load control dial (if equipped) to the correct setting for the product and load to be cooked (see manufacturer's manual).

e. Always load quickly to conserve heat, centering the pans on the racks. With light bake products, it is advisable to position pans as far as possible from the blower mechanism to reduce spattering. Take care to avoid spillage of batter or liquids while loading.

f. Set the timer. Cooking action starts as soon as the doors are closed.

g. The timer does not control the oven function, so check for doneness as soon as the bell or buzzer sounds.

h. Avoid unnecessary door opening during cooking; it disrupts the temperature pattern. Observe cooking progress through the door windows. Use interior oven lights only as necessary.

i. When roasting, place a pan of water at the bottom of the oven. This supplies humidity to reduce shrinkage.

j. Load and unload rapidly to conserve heat. Unloading is easier if the racks are pulled forward.

The cleaning of convection ovens requires cleaning methods somewhat different than stack ovens. The following instructions clearly state the steps to be taken for proper cleaning care.

Stainless steel exterior surfaces should be wiped down daily with a damp cloth. Stubborn soil may be removed with a mild detergent solution.

Do not use scouring pads or scouring powder on any exterior finish or on the door windows; damage will result.

Use a mild detergent solution on enamel finishes. An occasional application of a silicone-based automobile polish will help to maintain a "like new" appearance.

Racks and rack supports may be removed and cleaned at the pot sink. Some models feature a removable drip pan to catch spillage. This may be emptied and cleaned at the pot sink.

Interiors may be lined with porcelain, aluminized steel, stainless steel or Teflon®. Where removable (see individual manfucturer's instructions), liners may also be cleaned at the pot sink.

If not removable, liners (except Teflon®) should be brushed with a stiff brush or, if necessary, scraped with a spatula to loosen spillage and swept clean.

Never use a soaking-wet cloth or pour water in the interior of the oven.

Wash, dry, and polish plastic control knobs with a soft cloth.

Check frequently for hardened food particles or accumulation of carbon, especially around the oven doors. If doors do not close tightly because of such deposits, heat is wasted and the oven will not operate efficiently. Also, an ineffective door seal permits a constant escape of steam, which condenses and deteriorates the finish around the oven front and door lining.

After processing some foods at low temperatures, odors may linger in the oven. These odors may be cleared by running the oven fan for 10 to 15 minutes.

To clean the blower mechanism, consult individual manufacturer's instructions.

Exercises (209):

1. Why shouldn't you wash an oven while it is still hot—other than to avoid burning yourself?

2. What should you do before lighting a gas oven?

3. After you turn the temperture dial clockwise to 250°F, what is the next step?

4. What are the two types of oven most commonly used by the Air Force?

5. What does the motor-powered blower do?

6. What is the function of the load control in a convection oven?

7. When the door of most convection ovens is open, what effect does this have on the operation of the oven?

8. How is the stainless steel exterior of a convection oven cleaned?

9. How do you clean convection ovens that have enamel finishes?

10. How are the odors eliminated in a convection oven?

11. In a convection oven, why must the preheat temperature for baking be 50°F higher than needed?

210. State how to operate and maintain the microwave oven.

Microwave Oven. One of the newer pieces of equipment used in Air Force dining halls is the microwave oven (fig. 1-13). It differs from conventional ovens in that it doesn't use the direct application of heat to cook foods. In a microwave, foods are cooked by the microwave energy. This energy makes food generate heat within itself, thus cooking the food very rapidly. The food is cooked throughout and not from the outside as in conventional ovens. Microwaves are ideal for defrosting or finishing the cooking of meats but not for cooking from raw to done. Conventional cooking equipment should be used for browning.

The operating procedure for most models of microwave ovens is basically the same.

Turn the switch on. On most models a signal light will indicate the unit is working. Wait from 10 to 90 seconds (depending on make and model).

NOTE: Study manufacturer's instruction manual thoroughly; then file for future use.

The oven is now ready for continuous operation. Load the food item in its own serving dish. For the best efficiency, place only one type of food item in the oven at one time and close the door securely.

Set the timer and activate the starter control. A cooking light will come on. Once the cooking cycle is completed, the signal light will go off. Timers on some models must be reset to continue the cooking cycle. If the door of the oven is opened during the cooking cycle, the unit automatically shuts off.

The following safety precuations should be carefully and strictly followed.

a. Use cooking containers made only of paper, glass, porcelain, plastic, or ceramic. Never use metal utensils. Refer to manufacturer's handbook regarding use of foil wrap.

b. Never activate the starter control when the oven is empty with the door closed. However, the oven may be kept on standby between loads (switch on, door closed).

c. Don't place microwave units near cooking devices that give off excessive steam or heat. The working oven temperature should not exceed 90°F.

d. Allow for the maximum air circulation behind the oven in accordance with manufacturer's recommendations. Neither the airflow filter nor the discharge outlet should be obstructed.

e. Do not operate the oven if any of the following fine conditions exist:

(1) The door does not close firmly against oven front.
(2) The door has a broken or damaged hinge.
(3) The door gasket (seal) is damaged.
(4) The door is bent or warped.
(5) There is any visible damage to oven.

f. The oven should not be serviced or the safety interlock switches adjusted except by an authorized technician.

Microwave ovens are inherently clean. There are no fumes or grease-encrusted pans to deal with. Cleaning is simple.

(1) Turn the power switch to the off position.

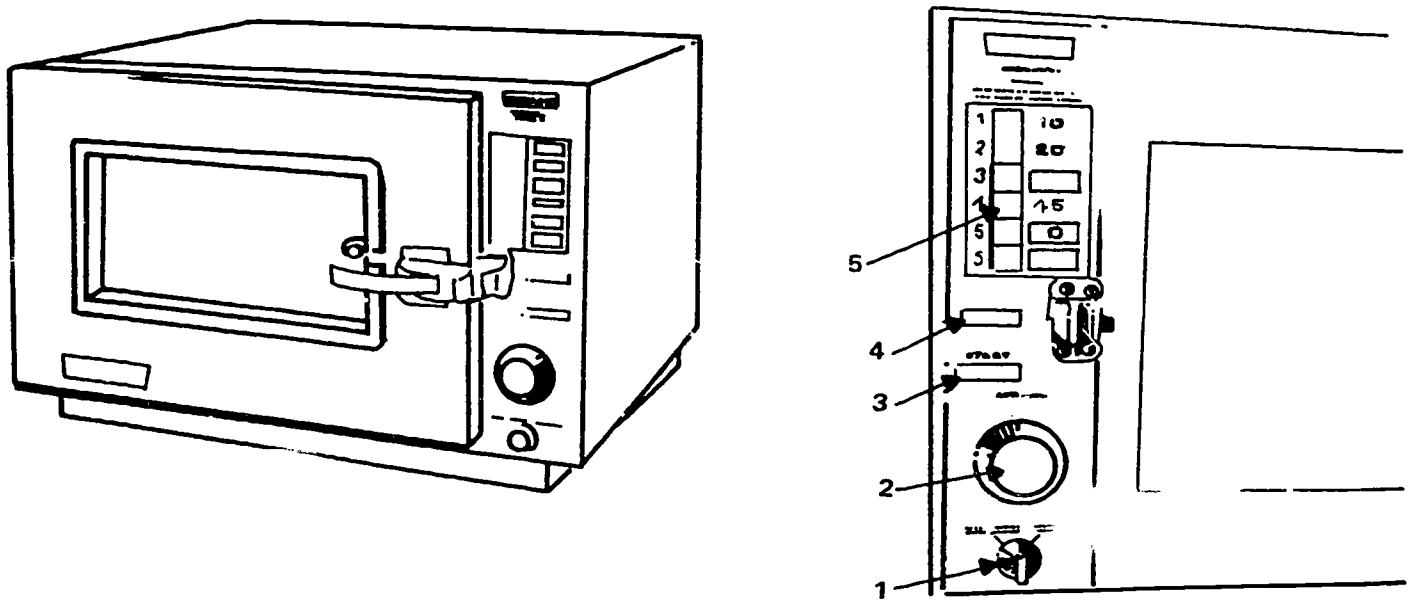

1. CONTINUOUS OPERATION—POWER IS CONTINUALLY BEING DELIVERED TO THE OVEN
2. STANDBY OPERATION
3. TIMER
4. "COOKING" LIGHT
5. PUSHBUTTON TIMER

40092

Figure 1-13. Microwave oven.

(2) Wipe all exposed surfaces in the oven cavity with cloth or sponge, using a recognized and acceptable detergent solution containing bacteria retardant; then dry.

(3) Turn the switch on and resume normal operations.

NOTE: Do not use scouring pads, powders, or other abrasive materials on any of the oven surfaces.

The major disadvantage of the microwave oven for dining hall use is its small capacity. Because of the limited amount of food that can be cooked at one time, the microwave is not practical for a large operation. There is still some questions about the safety of the microwave as well.

Exercises (210):

1. How does a microwave oven differ from a conventional oven?

2. If the door of the microwave oven is left open during the cooking cycle, what occurs?

3. How should you clean the cavity of the microwave oven?

4. What type of cooking containers should never be used in microwave ovens?

5. When does the signal light on a microwave oven go off?

6. Microwave ovens are ideal for what?

211. State how to operate and maintain a softserve ice cream machine.

Softserve Ice Cream Machine. One of the most popular items served in Air Force dining halls is ice cream. For morale purposes, the softserve ice cream machine (fig. 1-

14) is the most highly utilized piece of equipment in the dining hall.

All softserve ice cream machines have identical cabinets. However, there are usually three different types of twin-head machines: (1) both heads dispense only milk shakes, (2) both heads dispense softserve ice cream, and (3) one head dispenses softserve and the other dispenses milkshakes.

A softserve machine has a powerful motor and preset refrigeration components for a colder temperature.

Breakdown of equipment frequently occurs when the wrong mix is used. Approved mixes are available in two types: (1) dehydrated, or (2) fresh liquid. It is very important that the right mix is used for the right product (ice cream mix for software).

Each morning before operating the machine, dissolve 1/2 teaspoon of disinfectant in 1 quart of lukewarm water. Stir until completely dissolved; then add the sterilizing solution to 6 gallons of water.

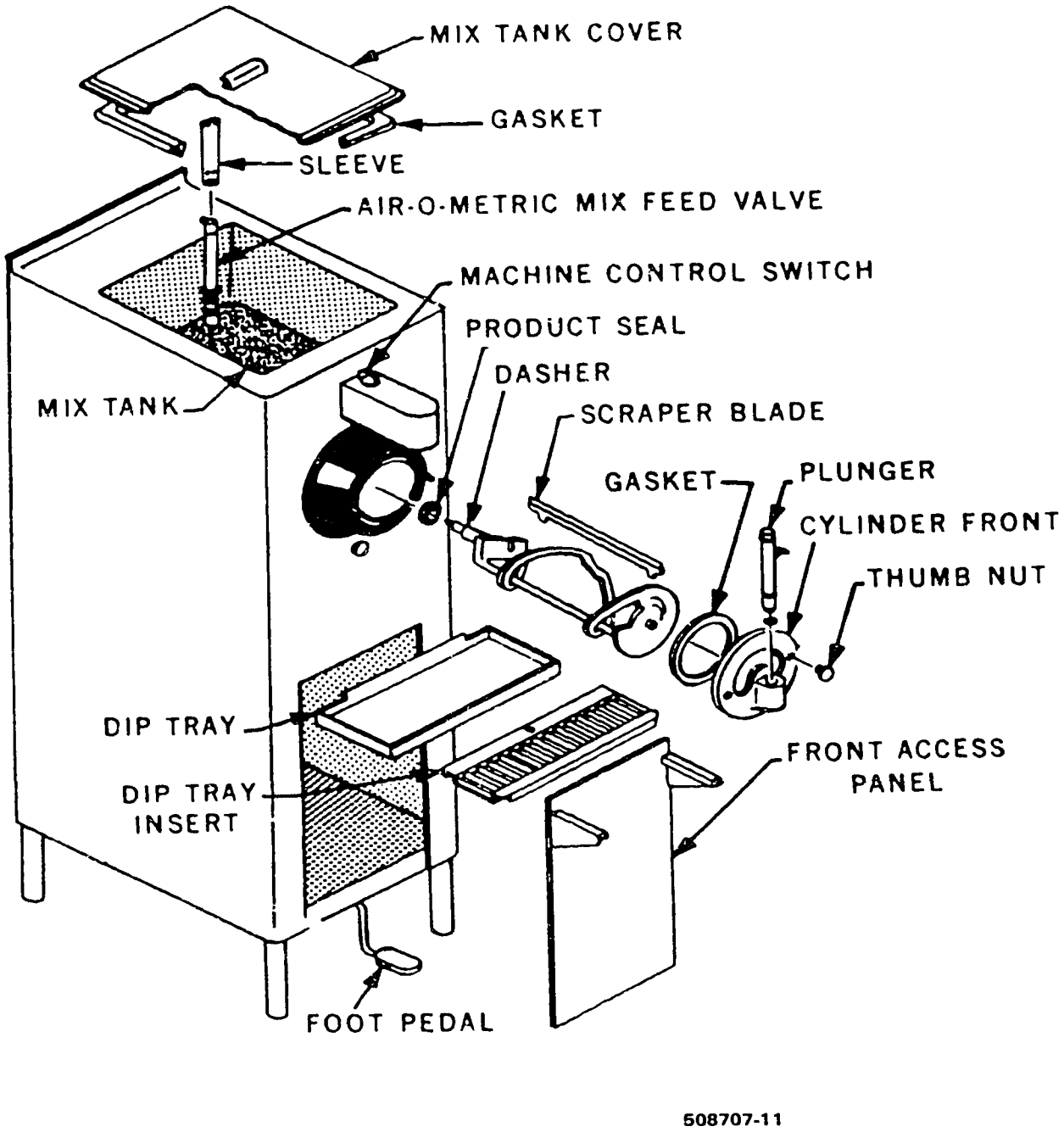

Figure 1-14. Softserve ice cream machine.

Pour the sterilizing solution into the mix tank and use the brush furnished with the machine to wet all surfaces that will come in contact with the mix. Turn the machine control switch to WASH for a maximum of 10 seconds to wet the cylinder parts.

After draining the sterilizing solution from the mix tank and cylinder, pour 2½ quarts of mix directly into the freezing cylinder, through the mix entry tube. At the same time, briefly open the front gate plunger to drain the sanitizing solution driven into the serving spout by the incoming mix.

Start dasher motor; turn on refrigeration. Freeze to a temperature of 18° to 22°F (approximately 10 minutes) or until the product can be drawn with a stiff consistency that will hold a peak.

At the end of the business day, or when the machine is not operated for a period of 1 hour or longer, the dispenser must be completely cleaned:

(1) Turn the machine control switch to WASH.

(2) Draw off the product until it is thin enough to run freely, switch machine to OFF.

(3) Remove the mix valve and draw off the remaining mix.

(4) Rinse the tank and cylinder with cold water, turning the machine control switch to WASH for 10 seconds. Always use cold water, the sudden application of hot water to a cold cylinder may cause permanent damage to the machine.

(5) Dissolve 4 teaspoons of detergent in 5 gallons of 130°F water. Mix the solution in the tank. Brush the tank surfaces and the hole connecting the tank and cylinder while the solution flows into the cylinder. Turn machine control switch to WASH for 10 seconds. Drain the solution from the tank through the front gate.

(6) Wet the brush in the detergent solution and brush through the hub drain tube. This step must be performed daily, since any plugging of the hub drain tube may result in serious damage to the drive mechanism of the machine.

(7) Carefully remove the front and dasher assembly. Remove the scraper blade and cream seal from the dasher assembly. Install the hub brush over the dasher drive shaft. Install the dasher and cylinder front with the hub brush in place.

(8) Pour 2 quarts of warm water into the tank, turning the switch to WASH while the water is draining into the cylinder. Before draining the water through the front gate, allow the water to flush through the hub drain tube.

Exercises (211):

1. How long is the machine control switch turned to WASH to wet the cylinder parts?

2. Why is the tank and cylinder rinsed with cold water instead of hot water?

3. What types of ice cream mixes are used in softserve machines?

212. State how to operate and maintain the meat slicing machine.

Meat Slicing Machine. This machine is a portable slicer designed for slicing hot or cold meat, vegetables, and cheese. It provides uniformity and speed in slicing with a minimum of waste. Slicers are made of either porcelain or stainless steel. They may be either gravity fed or semiautomatic. On semiautomatic slicers, the meat is placed on a platform and then pushed toward the slicing knife by a push plate. On gravity types, as shown in figure 1-15, the meat is placed on a V-shaped holder and fed to the cutting knife by gravity. Each slicer has a graduated dial or lever used to adjust the thickness of the slices. When the slicer is in use, it is located in the kitchen on a cook's table nearest the serving line.

Using the meat slicer is a simple, yet delicate operation. The entire machine and knife are constructed of sturdy material that can withstand years of hard wear. If you use the slicer with care, if safety precautions are observed, and if the knife is cleaned and sharpened according to instructions, the slicer is not so likely to fail. In case of any mechanical or electrical trouble, immediately disconnect all power. You must disassemble and clean the slicer following each use.

Before you start cleaning, turn the thickness control knob to 0 on the thickness indicator scale, and disconnect the plug. Use 1 ounce of soap (or other cleaning agent) dissolved in 1 gallon of hot water, a scrub brush, and two wiping cloths. Wash the stationary parts. Using one wiping cloth saturated with cleaning solution, remove all grease and food particles.

CAUTION: Keep the cloth away from the cutting knife edge. Also, watch your fingers to prevent contact with the cutting knife.

Use the other wiping cloth wet with clear water, to rinse off all traces of the cleaning solution. Wring the cloth dry and wipe the stationary parts dry. Use the rest of the cleaning solution to wash the disassembled parts. Rinse the washed parts by flushing with hot water from a faucet. Then air-dry the parts.

Clean as described in the preceding paragraphs. Never remove the knife guard until the machine is completely cleaned. After the slicer is cleaned, remove and clean the guard. The meat-slicing machines come equipped with a set of two circular sharpening stones that can be manually engaged to the edge of the circular knife for sharpening. Never sharpen the knife until the machine is cleaned, since grease will get into the sharpening stone and prevent sharpening. To sharpen the knife, place the outside of the sharpening stone on the back of the knife. With the knife running, depress the stone for 3 seconds and release. Repeat this operation until a burr appears on the inside edge of the knife. This indicates that the stone has ground across to the edge of the knife. Now apply both the inside and outside of

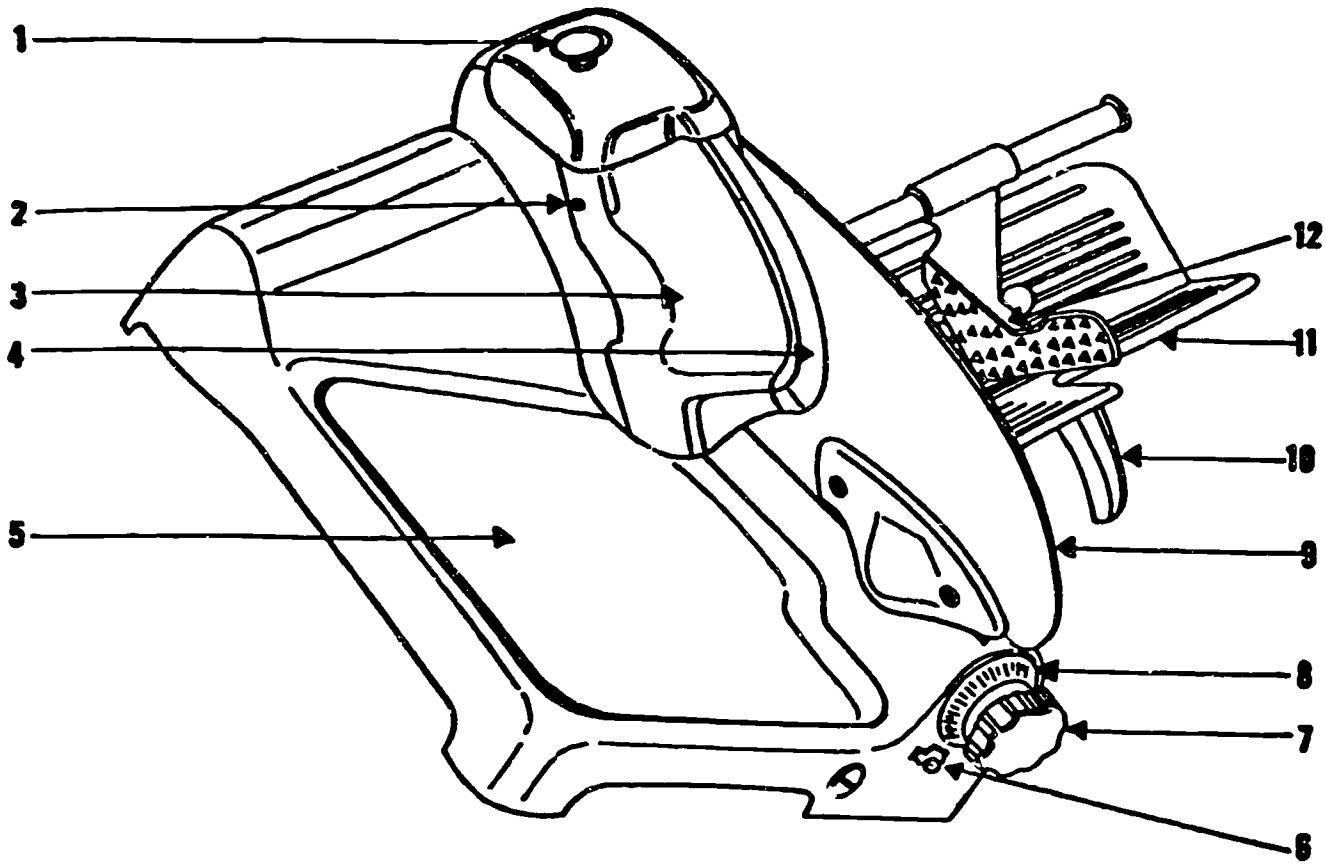

LEGEND:
1. SHARPENING ATTACHMENT.
2. SLICE DEFLECTOR PINS.
3. SLICE DEFLECTOR.
4. CUTTING KNIFE.
5. RECEIVING TRAY.
6. MOTOR SWITCH.
7. THICKNESS CONTROL KNOB.
8. THICKNESS INDICATING SCALE.
9. THICKNESS GAUGE PLATE.
10. FEED CARRIAGE GRIP.
11. FEED CARRIAGE.
12. END SLICE PLATE.

00922

Figure 1–15. Meat slicing machine.

the steeling stone for 3 seconds. After three or four such operations, the edge will be straight and make a perfect cutting edge. After each sharpening, wipe the dust from the machine.

Clean the slide rods at least once a week and oil them with standard slicing-machine oil. Never use the slicer when the knife guard is detached. Remove the electrical [illegible] ket immediately after each use. When you [illegible] ep your hands dry and away from the [illegible] push food products against the knife [illegible] hands; use the feed grip, push plate, or end-slice plate. To avoid severe cuts on your hands, never scrub or use a scrubbing motion when cleaning the knife. You should always wipe.

Exercises (212):

1. What should you use to push the food product against the slicing knife?
2. How often should you clean the slide rods on the meat slicing machine?
3. Where should the thickness control be set before you start to clean the slicing machine.
4. List the safety precautions for using the slicer.

213. State how to operate and maintain the meat-and-vegetable chopper.

Meat-and-Vegetable Chopper. The chopper is designed to chop or grind fat for rendering, meats (cooked or raw), vegetables, and bread crumbs from leftover bread or toast.

The main parts of the chopper are shown in figure 1-16. The chopper has a motor that moves the other working parts and a readily accessible, manually operated controller. Each chopper has a metal body with a hopper (feed pan and chopping cylinder). A feed worm in the body rotates, forcing the food into the hopper against the blades of the knife. The blades rotate against a perforated end plate. Attachments include a chopping cylinder, attachment hub, worm, knife, perforated plate, feed pan, adjusting ring, and stomper.

The small chopper has a capacity of approximately 8 pounds of meat per minute. The medium chopper has an approximate capacity of 20 pounds per minute. The large chopper has a capacity of 50 pounds per minute. Various kinds of knives or attachments can be used. The meat-and-vegetable chopper is portable and may be placed where most needed. It could be used on a steady stand, within easy reach of an electrical outlet.

Before placing meat or vegetables in the chopper, make sure that no bones or other foreign objects are present. Always feed the product into the worm by using a wooden stomper; never push the product into the worm by hand—you may lose some fingers. If food becomes clogged in the cylinder during operation, disconnect the power. Then remove the adjusting ring by turning it counterclockwise, and remove the perforated plate and knife. Clear the holes in the perforated plate and clean the worm. This cleaning practice maintains the operating efficiency of the machine.

After each use of the electrically operated chopper, disconnect the plug, remove all working parts, and wash them with a cloth and mild soap. Rinse them thoroughly and let all parts air dry. Never let the parts stand in boiling water because it is injurious to the plating. The following safety precautions should be carefully observed:

- Remember that the knives rotate several seconds after the machine is turned off.
- Never chop foods such as bone, gristle, cheese, soft bread, greens, or any spongy foods.
- Never try to push food into the worm with your fingers.

Exercises (213):

1. Before placing meat or vegetables in the chopper, make sure there are no what present?

   What sh[illegible] use to push food products into the hopper?

3. What is the first step in cleaning the vegetable chopper?

4. List the safety precautions for using the vegetable chopper.

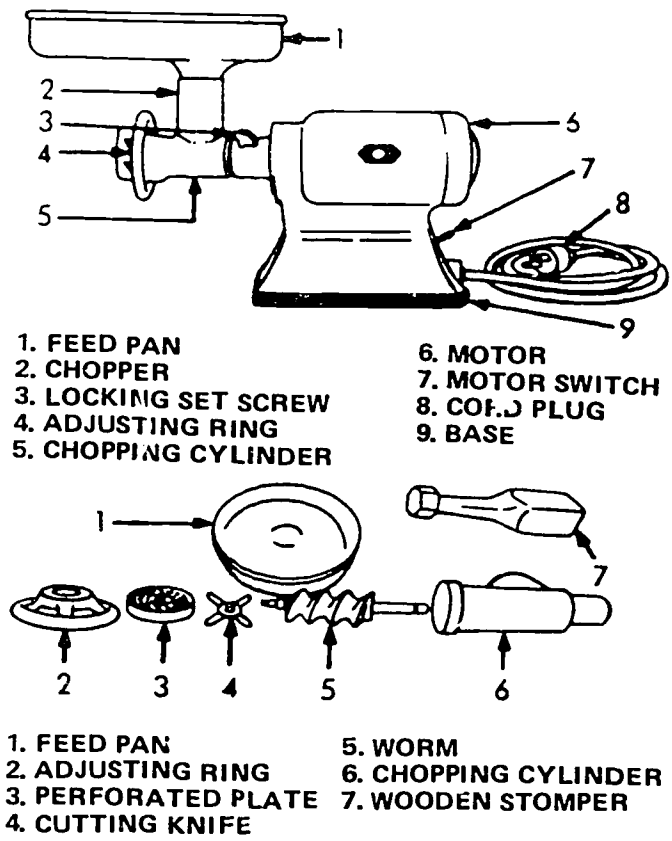

Figure 1–16. Meat and vegetable chopper.

214. State how to operate and maintain coffee-brewing equipment.

Coffee Urns. The coffee urn is used to brew coffee and keep it hot while it is being served. These large urns consist of an inner liner, or crock, and an outer jacket that is filled with hot water. The inner liner serves the dual purpose of heating the water for making coffee and holding the brew at a uniform temperature. The urn has two drawoff faucets, one for drawing [illegible]fee [illegible] the crock and the other for [illegible] water [illegible] the outer jacket. It has two glass gauge[illegible] for registering the amount of water in the outer jacket [illegible] the other for registering the amount of coffee in the crock.

The coffee urns are centrally located in the dining hall or located adjacent to the serving line, depending upon the amount of coffee served and on the feeding schedule. They are installed in single or double units.

The battery of pressure-type urns consists of one or two coffee urns and one boiler (fig. 1-17). As you can see, the boiler is mounted between the two urns in a three-piece battery; it supplies the hot water for the urns. The water is heated in the boiler and then siphoned under pressure to the urns, which can be used alternately, thus offering a big advantage over the single urn type.

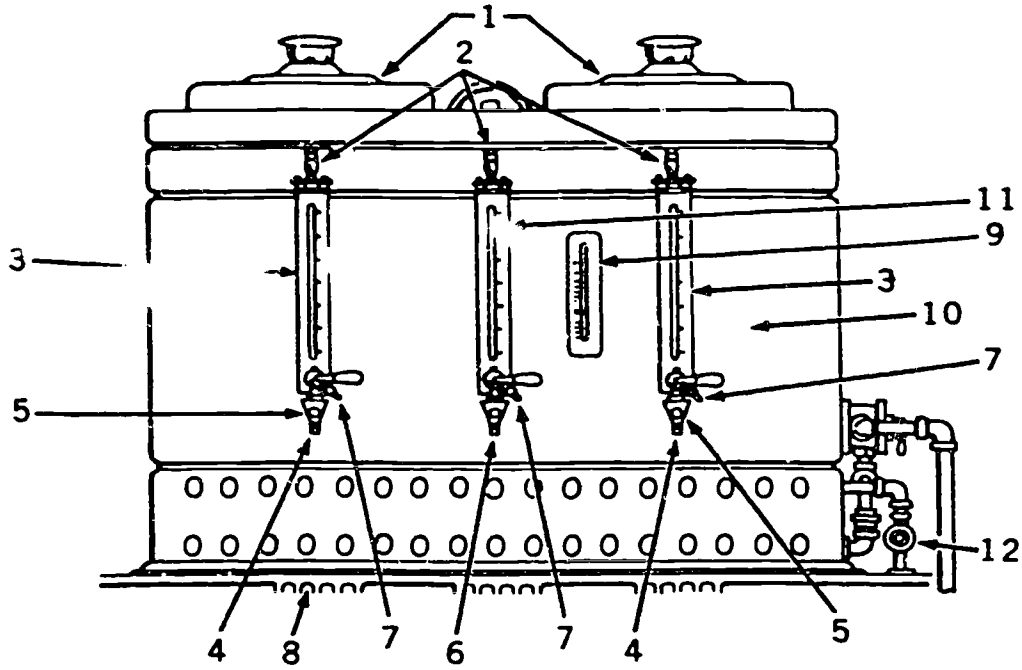

1. URN LIDS
2. GAUGE, GLASS CLEAN OUT CAPS
3. COFFEE GAUGE, GA GLASS
4. COFFEE FAUCET
5. COFFEE FAUCET CLEAN OUT CAP
6. HOT WATER FAUCET
7. GAUGE, GLASS PET—LOCK
8. DRAIN TROUGH
9. THERMOMETER
10. URN BODY
11. WATER GAUGE GLASS
12. WATER INLET VALVE

13277

Figure 1–17. Coffee urn.

The gravity type is like the pressure type except that the center boiler is elevated above the two urns. The outlet pipe from the boiler runs from the bottom of the boiler to the top of the urn, and gravity forces the water through the pipes. All these urns can be heated by gas, steam, or electricity, as shown in figure 1-17. Each has gauges for both water jacket and inner [illegible] some also have thermometer for indicating coffee temperature.

While [illegible] no great skill to make coffee, good coffee is not a matter of chance. Coffee urns, particularly manual types, should be operated only by experienced personnel who have been trained in the correct use and care practices. The following brewing steps are recommended.

Accurate measurement is the first critical step in brewing good coffee. Ratio should be 2 to 2½ gallons of water to 1 pound of coffee.

Spread fresh urn-grind coffee evenly in the filter bag (bag, basket, or paper). An even coffee bed is important. If a new urn bag is used, rinse it in hot water before placing it on the urn bag ring. If urn is not equipped with a brewing basket use a griddled riser to support the bag.

Use fresh boiling water. The urn should be attached to a cold waterline. The water temperature should be 200°F when it comes into contact with the coffee.

Pour water in a slow circular motion, making sure you wet all grounds evenly. Total contact time must be completed within 4 to 6 minutes when [illegible] urn grind. Replace urn cover between pours to [illegible] aroma. (Automatic models perform these steps [illegible] from the moment you touch the button.)

Remove grounds and filter [illegible] as soon as the water has dripped through. Neglect will result in bitter flavor transfers.

If cloth filter is used, rinse it in clear hot water, then store in cold water until next use.

Mix the brew. Draw off the heavy coffee from the bottom of the urn and pour it back into the brew to promote uniform mixing. Mix at least 1 gallon for each pound of coffee used.

Never repour brewed coffee back through used grounds. It only results in bitter taste.

Hold coffee for service at 185 to 190°F. Don't let it boil!

Never reheat brewed coffee. Brewed coffee should be discarded after 1 hour.

To maintain top quality coffee service, [illegible] cleaning care is crucial. Surfaces exposed to brewed coffee or coffee vapor accumulate deposits. Also, lime deposits from water minerals will collect. Consequently, a rigourous cleaning

porgram must be followed to prevent unpleasant tastes and odors.

The most important rule in cleaning coffee urns is the immediate and thorough cleaning after each use. There are two programs you should follow in cleaning the coffee urn—daily and semiweekly. The first area covered will be the daily cleaning schedule.

The daily cleaning program is very simple and will help you to achieve the maximum performance from the coffee urn.

Clean the urn immediately after each use. Rinse with a small amount of water to remove sediment and old coffee from the bottom of the urn and drainage line. Put a gallon or more of hot water in the urn and brush the inside carefully with a nylong brush, then drain and rinse with hot water until the drain runs clear. You are now ready to brew up the next batch.

At the end of each day, clean and brush the urn several times, then rinse thoroughly with hot water. Remove the clean out cap at the end of the faucets (or take apart faucets that have no caps) and scrub the pipe leading to the center of the urn. Clean the gauge glass with a nylon brush. Rinse well. Scrub the faucet, then rinse it thoroughly with hot water. Overnight, leave a gallon or more of fresh water in the urn until the next morning's use. Remove the cover and clean. When replacing the cover, leave it partly open overnight. The next morning, remember to empty and then rinse the urn with boiling water before starting to brew.

The semiweekly program is as follows. Fill the outer jacket three-fourths full of water. Turn on the heat and fill the urn liner three-fourths full of water. Use an urn cleaning compound recommended by the manufacturer. Mix the cleaning compound thoroughly with the water in the liner and let it stand for 30 minutes.

Clean the gauge glasses, facet pipes, plugs and any other deposit-collecting surfaces. Scrub with cleaning compound. Clean the fluid-seal diaphragm (around the spray head) daily. It is good practice to place a partially filled decanter under the brewing chamber when the device is not in use. Also, after each brewing, it is best not to remove the brewing chamber until the dripping has completely stopped. To clean the exterior of the device and the warming units, use water and damp cloth only. Avoid using caustic cleaning compounds or detergents.

Check all water, steam, and heating connections before using the urn. Use extreme care in pouring hot water over grounds—splashes can cause painful burns. Always use something substantial to stand on while you pour. When refilling water jackets or water urns, check closely to prevent water from overflowing. Never let water jackets or water urns run dry. If this occurs, shut off all sources of heat and let the urn cool before adding water.

When you light gas urns, make certain there is no gas accumulation under the urn before lighting a match. Check the safety valve frequently by inserting a blunt instrument through the top to be sure that the working mechanism is operable. Either air or steam will escape when you do this, indicating that the valve is in operating condition.

Automatic Coffee Maker. The coffee maker (fig. 1-18) is designed to brew fresh coffee under strict sanitary conditions. Each coffeemaker is made in units, and each unit may contain four or five burners set in a single or double deck. The electrically operated coffee maker has the ON/OFF switch and the heat control switches on the front. This type of coffee maker is shown in figure 1-18. Glass bowl containers are supplied for the actual brewing of the coffee.

Automatic coffee makers let you pour fresh water into a resevoir at the top of the device to obtain the same amount of hot coffee. In some models, gravity displacement of preheated hot water by cold water is the working rule. In others, water is brought to a boil before brewing a batch of coffee.

In using an automatic coffee maker there are two phases in making coffee, preheating and brewing. We will discuss both.

The preheating phase consists of some of the following steps. Slide the brewing chamber under the spray head and place an empty decanter under it. Then open the top cover and pour two decanters of cold water in the reservoir. Replace cover. Make sure to plug into electric outlet of the correct voltage (specified on the nameplate of device). It should be noted that two decanters of cold water are poured in *before* connecting the plug. Preheat time is usually 18 minutes, and a signal light will turn on when the water reaches the proper brewing temperature. At this point, add a third decanter of water to the reservoir. Hot water will immediately start to flow into the empty decanter beneath the brewing chamber.

Brewing good coffee requires skill, technique, and the experience of the skilled food service specialist. To properly brew coffee, remove the brewing chamber, and place one paper filter in it. Add required amount of coffee of recommended grind. Check to be sure that the coffee is evenly leveled before replacing brewing chamber. Add a decanter of cold water to the reservoir, coffee will immediately start to brew and flow into the decanter under the brewing chamber. When the flow stops, you are ready to serve.

The simple care of your equipment makes an important contribution to the excellence of your coffee service and efficient use of energy.

All parts of the brewer that come into contact with the coffee and coffee vapor should be kept immaculately clean. Decanters, for example, should be thoroughly cleansed and rinsed free of detergent after each use. Spray heads should be checked regularly for traces of lime or other deposits in or around the holes. Keep them clean.

Paper filters should never be reused, as they can pick up odors from other foods. Discard after each brewing process. Be careful where you store them.

Cloth filters should be rinsed after each brew and stored overnight in a vessel of fresh cold water. Replace cloth filters often to ensure good tasting coffee. A simple sniff test should tell you when it is time to change.

New cloth filters should be cleaned and rinsed in very hot water to remove sizing (starch) and cloth odors. Do not use soap, bleaches, or detergents; they transfer flavors.

If you brew in sealed filter bags with a stainless steel filter screen, rinse out the holding cartridge and screen

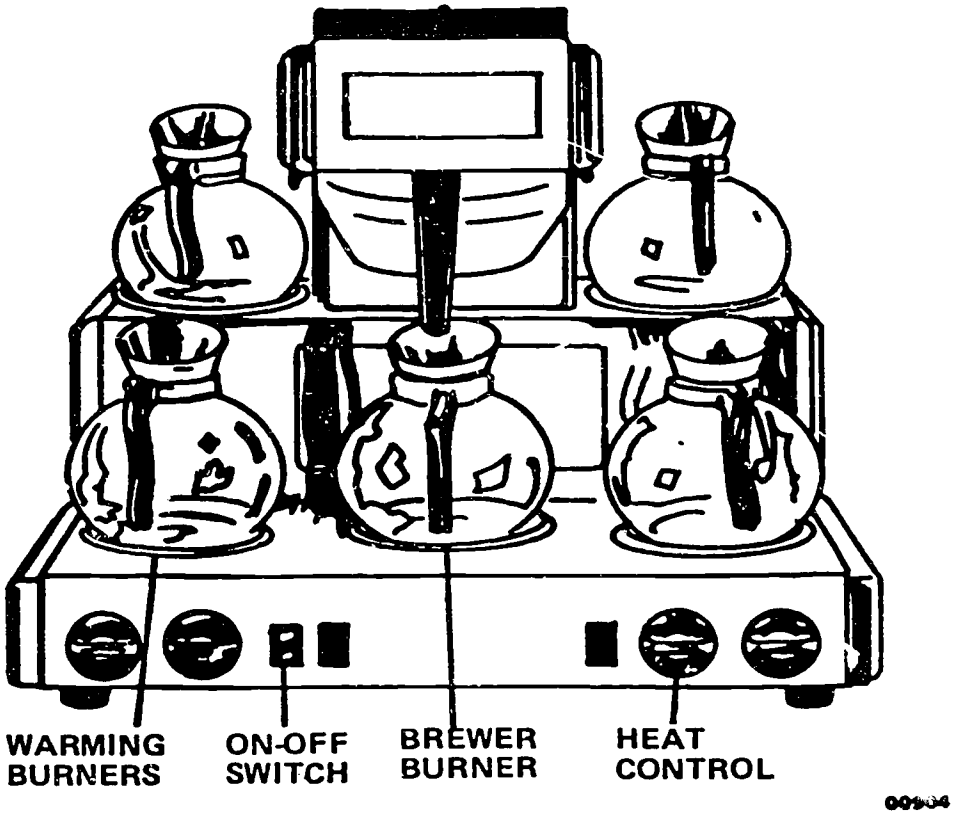

Figure 1–18. Automatic coffee maker.

daily. Once a week, soak the screen overnight in a solution of urn cleaner, and rinse thoroughly before reusing.

Exercises (214):

1. What is the ratio of water to coffee when preparing for brewing in a coffee urn?

2. What is the desired holding temperature for coffee in a urn?

3. What steps encompass the daily cleaning regiment of a coffee urn?

4. Where are the heat controls located on the coffee maker?

5. How are coffee decanters cleaned?

6. What are the two phases of coffee brewing in using an automatic coffee maker?

215. State how to operate and maintain a vegetable peeler.

Vegetable Peeler. A vegetable peeler (fig. 1-19) is designed to peel potatoes and other root vegetables with the least amount of waste. A vegetable peeler consists of a hopper, disc, peel trap, and motor. The vegetable peeler should be located near the vegetable work area and the vegetable storage rack, preferably near a floor drain.

The hopper is round in shape and has a funnel-shaped top opening to permit the pouring in of vegetables without spilling. The entire inner surface is covered with an abrasive substance. The outlet for the removal of the vegetables has a hinged door with a locking device and a chute for discharging the vegetables. Vegetables are peeled by the action of a revolving disc.

Before you pour in the vegetables, close and lock the outlet doors. Open the wash water valve, start the motor, and add the vegetables. Open the outlet door when the peeling is completed. Empty the peel trap after every three or four uses of the peeler.

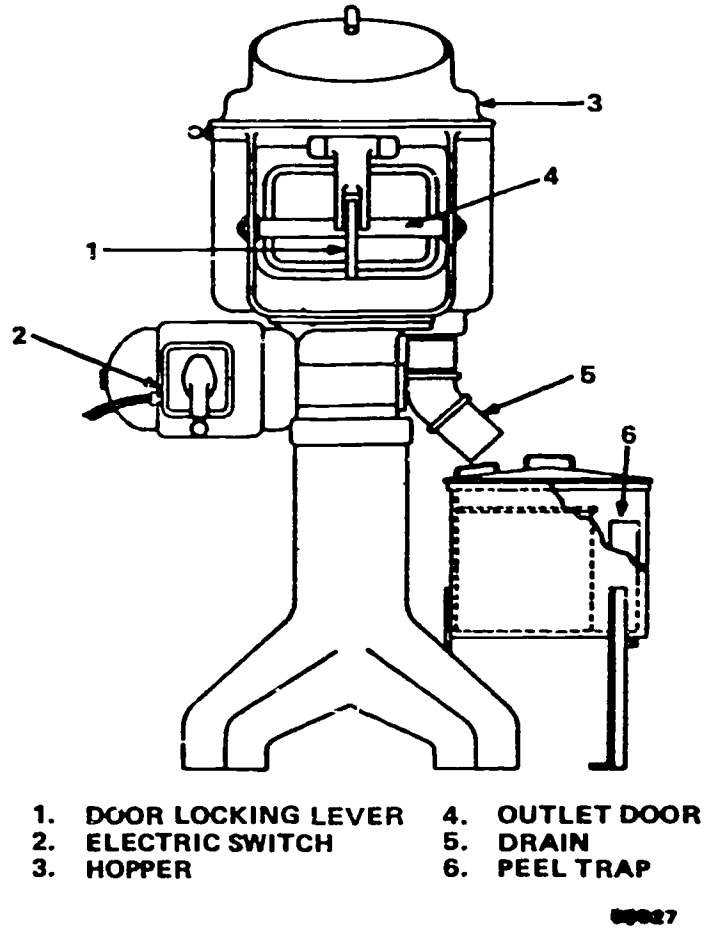

Figure 1–19. Vegetable peeler.

Each time you use the vegetable peeler, you must wash and rinse the disc. You should also pour hot water into the peeler until no sediment or peelings drain through the outlet pipe. Empty and rinse the peel trap as soon as you are through using the machine, and wash and rinse the strainer. Wipe the exterior surfaces with a damp cloth when you are through with the machine.

For best service, take care of your peeler. Be sure that there is no foreign material (gravel, wood chips, etc.) in with the vegetables. Check carefully as you pour the vegetables into the hopper. Make sure the running water c' ns the vegetables as they are being peeled and that helps to keep the sewer from being clogged.

Cleaning the machine is another preventive maintenance principle. At the end of each day's operation, remove the top cover and lift out the disc by its handles. Pour a bucket of hot water into the peeler to wash out the peelings. When the machine is not in use, leave the discharge door open to reduce wear on the gasket and to let the inside of the machine air dry.

Play it safe. Never overload the peeler. Check its rated capacity before loading. Check the abrasive disc before starting the machine. Make sure that it is secured in place. Do not put your hands into the machine when it is operating. Keep water off of the motor. Don't take a chance of electrocuting yourself.

Exercises (215):

1. What is the purpose of a vegetable peeler?

2. How often should you empty the peel trap on the vegetable peeler?

3. Explain how to clean a vegetable peeler.

216. State the operation and maintenance procedures of the pop-up and conveyer toaster.

Pop-up Toasters. A typical pop-up toaster is illustrated in figure 1–20. Be sure that the nameplate rating and voltage supply are identical before connecting your toaster. Line voltage that is higher or lower than the nameplate rating will affect the production and color of the toast. Check the manufacturer's operating instructions for the approved method for attaining top performance from your toaster.

Before operating, set the color-control dial which ranges from light to dark. A few trial runs will familiarize you with toast colors produced at different settings, giving you results that please your customers. Each lever and color dial controls two slots. At a given setting, your toaster will produce slice after slice, within acceptable limits, of uniformly colored toast.

Specialized toasters for English muffins, reglar muffins, or bagels are equipped with similar color-control dials. Dial settings depend on the produce, its moisture, and color desired. In toasting these split products, drop the halves into the slots with the cut surfaces facing each other. With the color dial set and the product loaded, all you have to do is press the carriage lever. The rest is automatic. The bread will pop-up at the end of the toasting cycle, color-controlled by the timer.

If it is necessary to interrupt the toasting cycle, press the manual trip release knob located near the color-control dial. On some models, cycle interrupt is accomplished by lightly pushing the carriage lever up.

If the toast does not pop-up freely when the cycle is completed, disconnect the device from the power source, allow it to cool, and try to remove the jammed bread with your fingers. Do not probe with a fork or other sharp object that might damage the heating elements.

Should heating elements need replacement, consult the manufacturer's manual or contact civil engineering.

The cleaning of pop-up toasters is very simple. The following steps will enable the toaster to operate at peak effiency.

The chromium plated finish is easily cleaned by wiping with a clean soft cloth. If your toaster has a satin finish, use

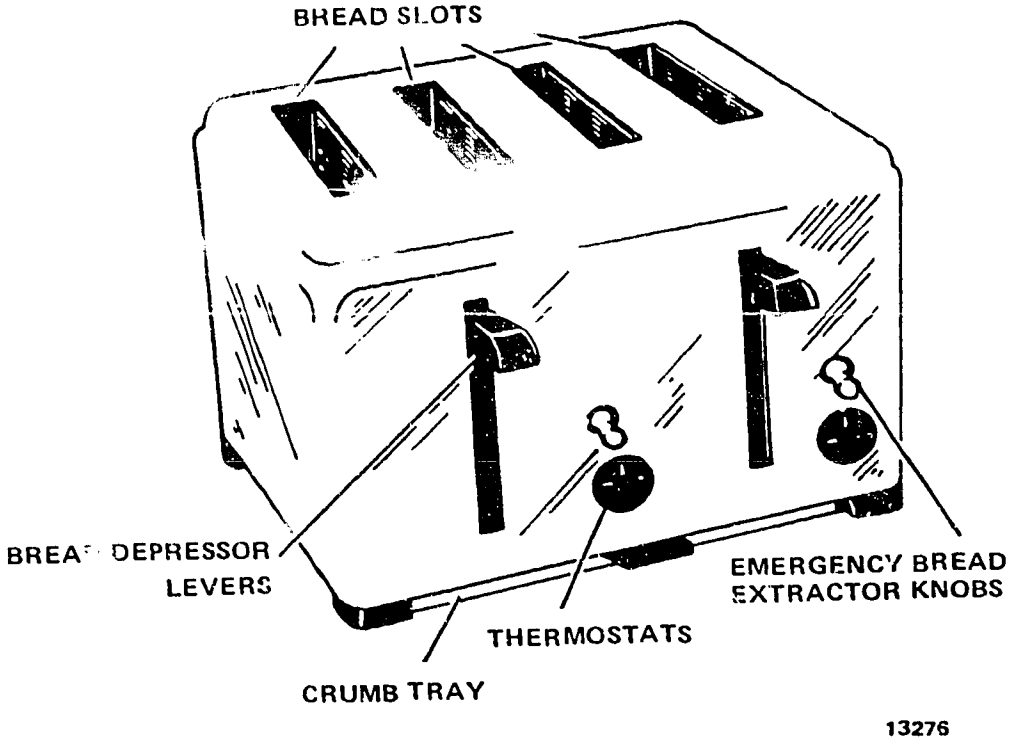

Figure 1–20. Pop-up toaster.

a detergent-soaked damp cloth, followed with a clear damp cloth.

Use a mild detergent. Avoid spilling any of the cleaning agent into the openings of the toaster. No steel wool or cleanser should be used, since it will mar the finish.

A removable crumb tray is located at the bottom of the toaster. This should be cleaned daily. Be sure to replace the crumb tray before continuing toasting operations.

Some models are equipped with removable base covers. Loose crumbs can be shaken out, but this cover should be taken out and washed to handle persistent accumulations. To remove, disconnect the power, take off the rubber feet and the four screws that secure the base cover. Do not reconnect the power until the base is replaced.

Failure of one of the heating elements will result in uneven heating by the others. To avoid interruption of service, it is wise to keep spare elements of the proper make and voltage on hand for speedy replacement (consult your authorized service agency).

NOTE: When a heating element fails, it must be replaced with an identically rated element. Rating is stamped on the element.

Conveyor Toaster (fig. 1-21). Most conveyors are equipped to toast either bread or buns; be sure to activate the control provided for operation needed. The bun control energizes only one-half of the heating for one side toasting. Consequently, buns must be loaded with the cut face toward the machine and away from the operator. If your conveyor is equipped for both toast and bun operation, activate the control indicated on the device.

To begin the operation, plug your conveyor toaster into a receptacle of the correct voltage (shown on nameplate). If local codes require a conduit hookup, consult your authorized service agency. Your conveyor may be equipped with a push button start control or ON/OFF switch to activate the motor and heating elements. Some models may be energized by the selector dial. On many models, a signal light indicates when the device is energized.

Before toasting, set your dial to the indicated "preheat" position. Preheat time, for maximum capacity, is about 20 minutes.

When changing from toast to bun operations, allow about 10 minutes for the unit to adjust to temperature change.

Set the color-control dial for the shade of color required. Each conveyor rack section will hold two, three, or four bread slices or buns, side by side, according to model size. Some models are designed to permit either front or rear discharge of toasted product. A toast slide is furnished and this can be sloped either way as needed. When the slide is set for rear discharge, the warming drawer and crumb tray must be inserted from the rear of the unit. This positioning, during rush hour, enables you to load from the front while the finished toast is unloaded to the rear.

To stop the unit at any time, push the off button or snap off the toggle switch.

The cleaning for conveyor toaster is essentially very simple. The stainless steel exterior of your conveyor toaster needs only daily wiping with a damp cloth to keep its original luster. Allow the unit to cool before wiping heated parts, then follow these suggestions:

a. To remove the conveyor racks for cleaning, hold the carrier chain against the side of the unit, then slide the rack in the opposite direction until it is engaged from the chain pin, and pull clear. Boil the racks in soapy water.

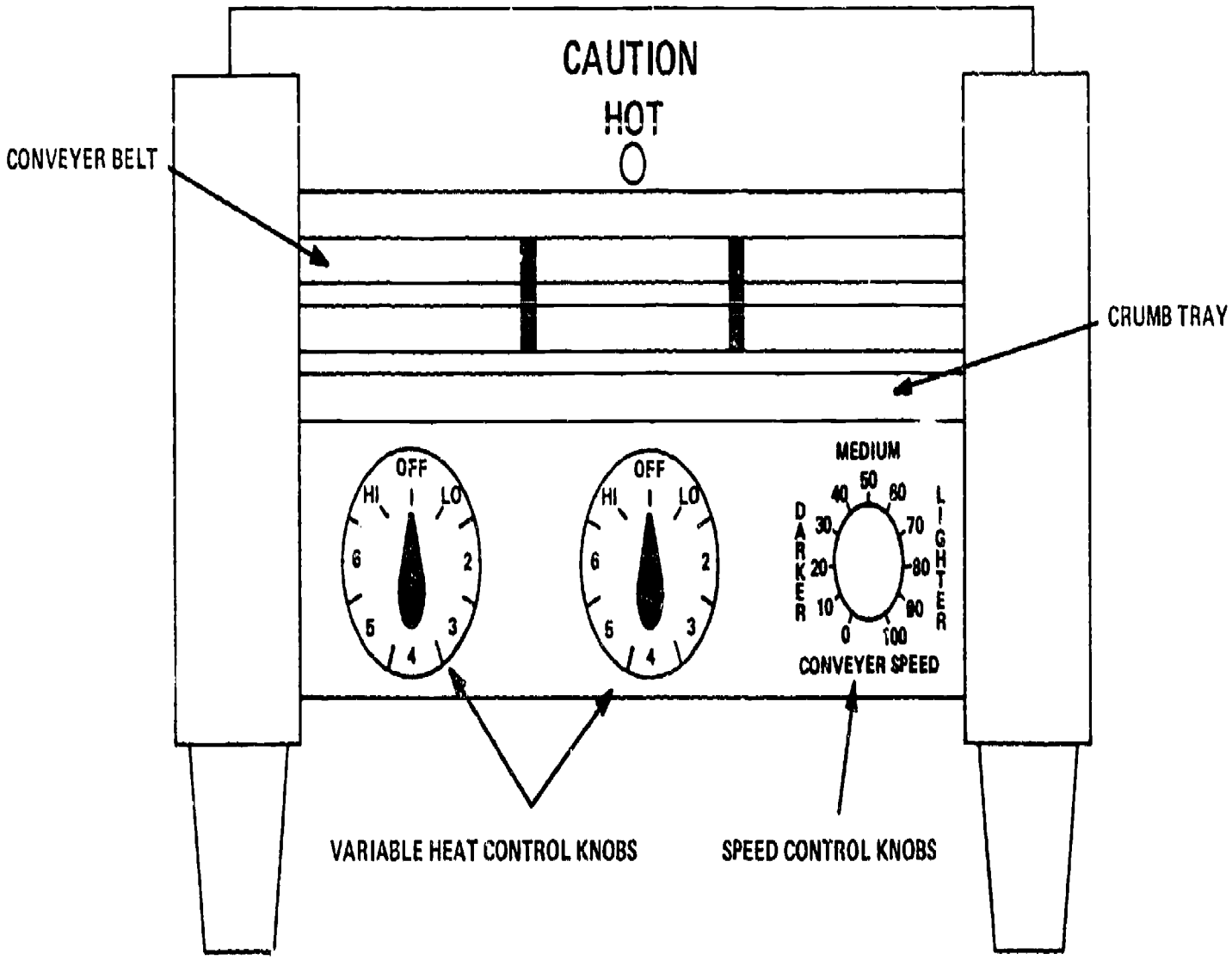

13288

Figure 1-21. Conveyor toaster.

b. To replace the racks, make sure that they face directly opposing chain pins or the conveyor belt will bind. It's a good tip to always leave one rack in its original position to ensure proper alignment of replaced racks.

c. When handling racks, avoid use of excessive force. A bent rack will cause trouble along the conveyor system.

d. Take care to keep water or cleaning compounds from contact with the conveyor chains; rust on the chains will threaten the life of the bearings and gears.

e. Do not oil or grease the chains. Burn-off from the heated toaster will convey carbon particles to the bearings. Instead, regularly apply a colloidal graphite lubricant.

f. The toast warming drawer and crumb tray on your conveyor are removable for cleaning. Replace the crumb tray first.

g. In the event of failure of the heating elements, call your authorized service agency.

Exercises (216):

1. How do you control the color of toast in a pop-up toaster?

2. What effect does line voltage have on toast?

3. How are crumbs removed from a pop-up toaster?

4. What is used to clean the exterior chromium plate finish of a toaster?

5. How is the satin finish cleaned on a pop-up toaster?

6. Why is it wise to keep spare parts for a pop-up toaster?

7. In a conveyor toaster what is the preheat time for the maximum load?

8. How much time should you allow when changing the temperature from toast to bun operations?

9. Why is it important to ensure that water or cleaning compounds do not make contact with the conveyor chains?

10. How are conveyor racks cleaned?

217. State how to use and maintain refrigerator equipment.

Refrigerator. The refrigerator is used to preserve food in its normal state at a safe temperature without freezing. It is boxlike in shape and can be built for either walk-in, reach-in, or pass-through use. The walk-in type, as the name implies, is a room/compartment that can be walked into. These rooms, or compartments, are kept at different temperatures, depending on the food product to be stored. The reach-in refrigerator, shown in figure 1-22, has a capacity of 65 cubic feet. Figure 1-23 shows a pass-through refigerator with a capacity of 40 cubic feet.

Refrigerator equipment should be installed in the area in which it will be used and should be used for the purpose for which it was designed. For example, if a particular unit is intended to support a short-order line operation, then install it directly behind that line; if a unit is intended to support a salad preparation area, then install it in that immediate area. Pass-through refrigerators should not be installed against walls where only one side may be utilized.

Before you clean a refrigerator of any type, remove the food and place it in another refrigerator immediately. Remove the dunnage and shelving from the walk-in box and the shelving from the reach-in and pass-through types. Dip a wiping cloth in baking soda or vinegar solution and wipe all shelving clean. Scrub the floors with a solution of detergent. Allow to air dry.

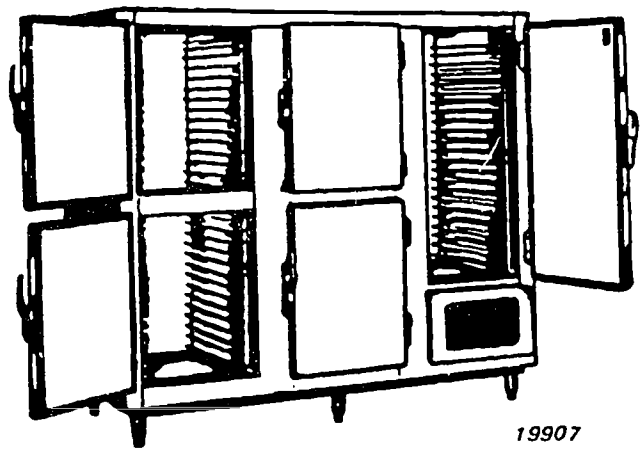

Figure 1–22. Reach-in refrigerator.

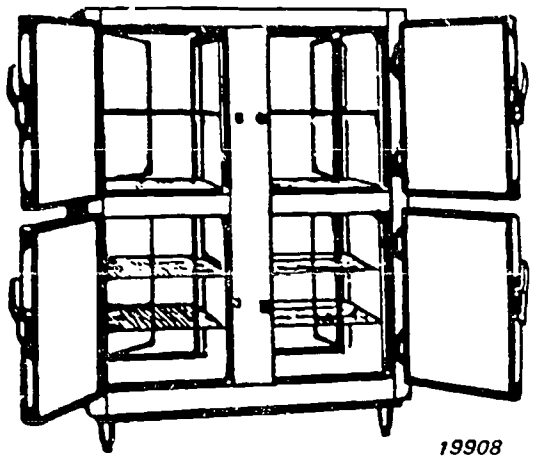

Figure 1-23. Pass-through refrigerator.

Always keep the doors closed when not removing or placing food. Store food so that the air can circulate around each article, and keep the most perishable foods in the coldest part of the refrigerator. Be sure the door on the walk-in can be opened from either inside or outside, and ensure that it has a sign reminding personnel to check the inside before locking. Always turn on the light as you enter the refrigerator. Never stock supplies so they are in danger of falling. Always keep floors free of grease and water to prevent the possibility of falling.

Exercises (217):

1. What must you do before you clean a refrigerator of any type?

2. What types of solutions are used to clean refrigerator shelves?

3. How must floors be maintained to prevent the possibility of falling?

218. State how to use the icemaking machine.

Icemaking Machine. Icemaking machines (fig. 1-24A) make ice cubes or crushed ice directly from flowing water. They are usually located in the kitchen area adjacent to the serving line. Capabilities available are 50, 200, 300, 400, and 2,000 pounds in a 24-hour period. Some of the machines can produce both cubes and crushed ice. The machines are constructed of steel and have an enamel finish. They have a refrigeration system, an ice bin, and a crusher (if the machine supplies crushed ice). The refrigerating unit usually has a hermetically sealed compressor mounted on a spring carriage. The water-cooled condenser is of copper-shell and finned-coil construction. The ice-freezing surface consists of brass tubes arranged vertically between copper refrigerant coils. The evaporator is insulated and enclosed in a galvanized casing.

The crusher is made of stainless steel. Its chute is divided into two channels by a hinged baffle. A flick of the selector switch turns the baffle to deflect cubes into the cutter blades, as depicted in figure 1-24B, to make crushed ice, or send them directly into the bins as cubes.

The frequency of operation of the ice machine depends upon the amount of ice needed. To operate the machine, flip the manual control to the ON position. Once the storage bin is full, the pressure against a trigger mechanism shuts the unit off automatically.

After each meal, wipe down the outside of the icemaking machine with a damp cloth; then dry it with a dry cloth. Never try to disassemble any parts on the icemaking machine. Installation and maintenance engineers take care of maintenance. However, there are safety precautions you must practice. Never remove the panel leading into the crusher while the machine is operating. As we have said before, this is a job for the installation and maintenance people.

Exercises (218):

1. What determines the frequency of operating of the ice machine?

2. What part of the icemaking machine should never be moved while the machine is in operation?

3. How do you operate the machine?

4. What is the capacity of ice machines?

1-2. AF Occupational Safety and Health (AFOSH) Program

As an apprentice food service specialist, your role takes a different meaning here as we discuss your responsibilities in supporting the Air Force Occupational Safety and Health (AFOSH) Program. AFOSH's policy is to conduct active and continuing occupational safety, health, and fire prevention programs at all organizational levels. In this section, we will discuss AFOSH and how it applies to your career field. We will discuss some hazards, AFOSH standards, and ways to keep your area safe and clean.

A

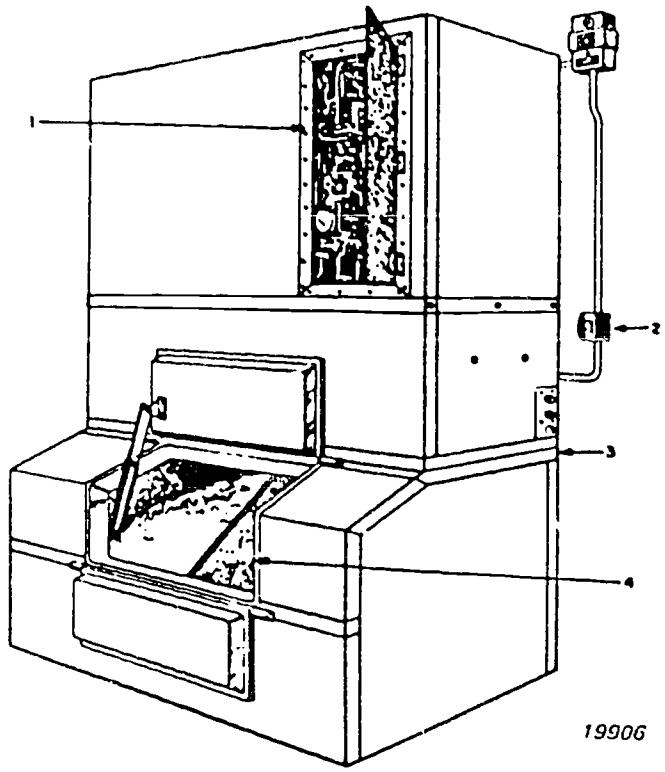

1. CONTROLS 2. SWITCH 3. BODY 4. STORAGE BIN

B

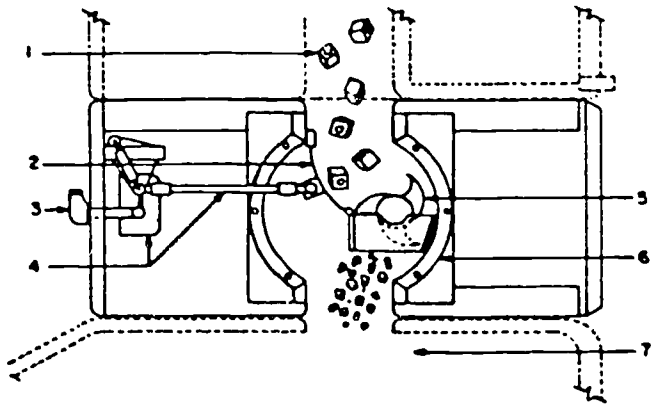

1. Ice chute
2. Hinged baffle
3. Selector switch
4. Baffle changing mechanism
5. Cutting blades
6. Baffle plates
7. Storage bin

19904

Figure 1–24. Icemaking machine.

219. State the precautions for operating equipment safely.

Equipment Safety. In the following paragraphs we will discuss various types of equipment and the safety precautions to observe when operating each.

Electrical Equipment. Dining hall personnel are constantly exposed to the dangers of electrical shock, burns, and injuries caused by electrical fires. Short circuits, overloads, accidental grounding, poor contacts, and misuse are all causes of accidents involving electricity.

Never operate electrically-powered equipment on a wet surface. If your equipment has exposed wires, don't operate it until the wire is replaced. Do not clean electrical equipment while the power is still connected. Unplug it. Do not overload sockets by using extension cords. Never try to fix electrical equipment yourself. Get a qualified electrician to do the repairs. Keep water away from electrical motors.

Gas equipment. Always follow manufacturer's instructions when lighting gas-operated equipment. There are a few general safety precautions that should be taken when cooking with gas equipment. All gas fumes should be cleared out of ovens before attempting to light them.

You clear gas fumes out of an oven by opening the oven door and airing it out for about 10 minutes. Light the burners on top ranges with long tapers to prevent flashbacks from burning you. If you suspect a gas leak, call the fire department. It is better to be safe than sorry.

Steam equipment. When operating steam equipment, always check for steam leaks. Steam is vaporized water. It is very hot and could easily burn you. If you detect a steam leak, get it repaired before you attempt to operate the equipment. Keep track of the steam pressure by checking the pressure gauge during equipment use. Follow the manufacturer's suggested operating pressure. Never open a steamer while the steam valve is still open. Shut the steamer off and wait a few minutes before opening the door. Stand at the hinge side of the steamer door to prevent the steam from burning you when you open it.

Knives are the cause of most injuries in food operations. When not in use, knives and other sharp instruments should be stored in racks or drawers so the blades are completely enclosed and protected. When cutting with a knife, cut away from your body and from fellow workers. When handwashing a knife, keep the sharp edge away from you. Do not leave knives in sinks or concealed areas. If a knife falls, do not grab it; get out of the way and let it fall. See that knives are kept sharp. A sharp knife is safer than a dull one because it will cut more easily and require less pressure. This reduces the danger of the knife slipping and cutting you. Use the proper knife for each job—boning knives for boning, carving knives for carving, paring knives for peeling, etc.

Exercises (219):

1. List at least two causes of electrical accidents.
2. What should you use to light burners?
3. Where should you stand when opening the door of a vertical steamer?

220. State the preventative measures for keeping a kitchen safe.

Kitchen Safety. Exhaust hoods installed over cooking equipment must be cleaned frequently to prevent an accumulation of flammable greases. The exhaust systems should be fitted with grease traps or filters which must be cleaned frequently.

All cold-storage rooms and walk-in refrigerator doors must be equipped with at least one door that can be opened from the inside. When freezer doors must be locked from the outside, the doors must be posted with permanent signs that read: DO NO LOCK THIS DOOR UNTIL YOU HAVE MADE CERTAIN NO ONE IS INSIDE.

The use of unskilled workers as kitchen help results in an increase in unsafe acts. Control of this factor demands constant and alert supervision. An effective approach is constant safety training of kitchen employees. Only fully trained personnel should be permitted to operate slicing, grinding, mixing, or other food-processing machines. As a constant reminder of the hazards involved, instructions and safe operating procedures should be posted in plain sight on all kitchen machinery.

Employees should make certain the way is clear before carrying hot containers from one place to another. Pads, potholders, or other insulated handguards should be used to carry hot pans. Containers of hot liquids or hot foods should never be carried by hand across greasy or slippery floors. The handles of all cooking utensils and containers must be inspected frequently for defects. All long-handled pots and pans should be placed with the handles parallel to the edges of stoves.

Have a planned traffic system to and from the kitchen and dining areas. Ensure employees follow the system. Doors should be marked ENTRANCE and EXIT and should be used for the stated purpose only. Employees must be instructed to use the proper door at all times. Low heeled, slip-resistant shoes should be worn by all food service personnel.

Insecticides, cleaning agents, poisons, and other substances that may contaminate food should have their own storage area. They must not be stored where food is prepared. You should provide metal containers for storing soiled laundry. Do not locate drying racks for towels, hot pads, and other kitchen accessories near open fires or hot surfaces. Passageways and aisles must be kept clean and free of obstructions.

Personnel should not be assigned heavy-lifting duties unless they are physically capable. Recommended weight limits are 50 pounds for male workers and 25 pounds for female workers. Before an object is lifted, it should be

inspected to ensure no grease or other slippery substance is present. When lifting, you should first make certain your footing is secure. You should then grasp the load in such a manner that you can hold it if it becomes unbalanced. You should lift from a squatting position with your back straight and your legs exerting the primary lifting force. This allows for smooth and even lifting with the least possible danger. You should wear gloves to lift objects that have sharp or burred edges or splintered surfaces. When the load requires excessive exertion, you should use a suitable mechanical device to do the lifting. Carry loads as close to your body as possible. Never shift your grip after you have lifted the load. Don't be afraid to ask for help with heavy loads.

Exercises (220):

1. Why should exhaust hoods be cleaned frequently?

2. Where should safe operating procedures of kitchen machinery be posted?

3. Where should cleaning agents be stored?

221. State the precautions used to prevent fires.

Fire Prevention. An important task in preventing fires is fire prevention inspections. They must be conducted daily and the report given, by phone, to the fire department. Ensure all open-element or open-flame equipment has been turned off or extinguished before closing the dining hall for the day. Disconnect all items of electrical equipment except those essential to after-hours maintenance functions.

The fire reporting procedures for all military personnel are easy to remember. Just remember the word SPEED.

S - Sound Alarm.
P - Phone fire department. At most bases it's 117.
E - Ensure personnel evacuation.
E - Extinguish if possible.
D - Direct fire-fighting personnel.

All military personnel are responsible for the following fire prevention practices in the course of their duty hours. You must practice fire safety in daily activities, know the correct fire reporting procedures, know how to use the fire extinguishers in your work area, and know how to operate your fire alarm system.

The building fire warden is appointed by the custodian or dining hall supervisor. The fire warden should check all fire extinguishers and door exits daily to ensure they are in proper operating condition. All personnel employed in the building must be familiar with fire alarm locations and the fire evacuation plan.

The fire warden must enforce designated smoking area rules and ensure that properly labeled receptacles for smoking materials are provided. He or she must ensure that proper closing inspections are conducted at the end of each work day. Other duties are:

a. Direct evacuation during fire drills or fires.
b. Report fires and sound alarms.
c. Direct fire fighting operations until fire fighting personnel arrive.

Exercises (221):

1. How often are fire prevention inspections conducted?

2. Who is responsible for checking all fire extinguishers daily?

222. Identify when and how to administer first aid for choking.

First Aid for Choking. Choking is one of the major causes of accidental death in the United States today. A person can choke to death within 4 minutes. The information in this section was taken from the American Red Cross Poster 1030, "First Aid for Choking." This information is to familiarize you with first aid for choking; it does not qualify you to perform it.

Choking is caused by objects blocking the windpipe. The universal sign for choking is for the victim to clutch his or her throat. If the victim can cough, speak, or breathe, do not interfere. The victim should be able to expel the object alone. If the victim cannot speak or breathe have someone call for medical help. Then take action to aid the victim.

For conscious victims, follow these four steps:

(1) Get behind the victim and give four quick, hard blows to the middle of the back. These are called back blows.

(2) Place your arms around the victim's waist.

(3) Make a fist with one hand and grasp the fist with the other hand.

(4) Give four abdominal thrusts by quickly pulling your fist into the abdomen of the victim in an action similar to a bear hug.

Repeat these steps until the victim expels the object or until the victim becomes unconscious.

For unconscious victims, follow these four steps:

(1) Try to ventilate the victim with mouth-to-mouth resuscitation.

(2) Administer four back blows.

(3) Administer four abdominal thrusts by quickly pushing up on the victim's abdomen between the rib cage and waist.

(4) Try a finger probe for the object by opening the victim's mouth and using your index finger like a hook to find the object.

Repeat these steps until effective or medical help arrives. The abdominal thrust can cause injury, so be cautious.

Exercises (222):

1. What is the universal sign for choking?

2. At what point should you take action on a choking victim?

3. What is the first step in treating an unconscious victim?

1-3. Energy Conservation

Wise use of natural gas and electricity has never been more important than it is today. Not only will it result in the conservation of vital resources but it will also help keep Air Force utility costs as low as possible. A better understanding of the wise use of equipment and lighting, as well as ways to guard against unwanted heat loss in the winter or unwanted heat gain in the summer, is essential in keeping energy consumption as low as possible in our food service facilities.

223. State the steps taken to conserve energy in food service facilities.

Equipment Conservation. Improper use of food service equipment causes hundreds of thousands of dollars in energy waste every year. Money that could be used to purchase better equipment, build better facilities, or further increase the wages of military personnel is being thrown away by poor energy conservation procedures. Here are some steps that each of you as food service personnel can do to help conserve energy.

Open refrigerators and freezers as seldom and for as short a time as possible.

Ensure your refrigerators and freezers are not operating at a colder temperature than required.

Check refrigerator and freezer door seals occasionally. If they are loose fitting, notify your supervisor immediately.

Do not allow ovens and ranges to preheat more than the required period of time. Most ovens should be preheated for 10 minutes at 250°F.

Turn off ovens and ranges after food items have been removed from them.

Use standardized recipes and cook by the time and temperatures stated on them to prevent cooking food items for a longer period at too high a temperature.

Trust the thermostat setting—don't continually open oven or range doors to check on products.

Remove sediment from around and under the heating elements of deep-fat fryers to ensure proper heating efficiency.

Prevent preheating fryers more than the specified period of time and preheat at the required preheating temperature.

Do not allow liquids to boil. The temperature setting that allows liquids to simmer is the highest temperature setting necessary to cook any food item.

When preparing food items in the steam-jacketed kettle, close the lid whenever possible to prevent valuable heat from escaping.

Turn off all lights when not is use.

Turn off all electrical equipment when not in use.

When the heat or air conditioning is on, keep the windows closed.

To get more in-depth information about energy conservation in dining facilities, review Air Force Pamphlet 146–21, *Energy Conservation for Airmen Dining Facilities*. This pamphet provides guidance for energy conservation in existing food service facilities. It applies to airmen dining halls and appropriated fund food service Air Force wide.

Exercises (223):

1. What steps can you take to prevent refrigerators from wasting energy?

2. How can you ensure proper heating effiecency of a deep-fat fryer?

3. What Air Force publication governs energy conservation in food service?

Food Service Management

IN THIS CHAPTER we will cover basic food service management. It is essential for you to understand the management process in order to understand management decisions.

We will discuss food service procedures; storeroom operations; subsistence records; accountable records; A la carte; AFCLSAP; fraud, waste, and abuse; and supervision of civil service and contract employees. All of these sections are important to the effective operation of all Air Force food service operations.

2-1. Food Service Activities

There is more to Food Service than dining facilities. Here we will discuss six different food service activities: dining facilities, flight kitchens, alert facilities, crash kitchens, pastry kitchens, and carry-out service.

224. State the purpose of different food service activities.

Dining Facilities. Dining facilities are designed to be comparable to commercial food service activities. The equipment in a military dining facility, which is commercially available, is set up to create a good workflow. This allows you to feed the number of people the dining hall was designed to feed. Dining facilities usually feed the bulk of the base enlisted population. This is why dining facilities (dining halls) are considered the most important facilities in food service.

Flight Kitchens. Flight kitchens are designed to provide authorized military and civilian passengers and crewmembers with acceptable meals to be eaten in flight. The types of aircraft on your base and the command you work under determine the types of meals you prepare in your flight kitchen. Flight kitchens will be discussed later in this chapter. The standard flight meal is the sandwich meal.

Alert Facilities. Alert facilities are designed to feed crewmembers, maintenance personnel, and Security Police personnel working in an alert area. Alert areas are set up to have a military force ready to respond to enemy attack 24 hours a day. They provide the personnel with fresh hot meals for both pre–flight and post–flight feeding. The food you serve in an alert facility is similar to that served in the main dining facility, but you should avoid serving spicy foods or any other foods that could tend to upset anyone's stomach.

You must be patient with alert customers. Some of them are required to stay in the alert area as long as 7 days. This tends to affect a person's disposition.

Fire Station Kitchens. Fire station kitchens are designed to provide a hot and otherwise acceptable meal to military and civilian firefighters who perform crash and building firefighter duties. Some fire station kitchens prepare and serve the food at the site of the emergency. But at the majority of bases, the food is cooked in the main dining facility and transported to the crash site for serving.

Pastry Kitchens. Pastry kitchens are authorized when there are several dining facilities on base and it would be impractical to have bakers in every dining facility. Pastry kitchens keep their own accounting records if they are separate from the dining facilities or if they have a separate storeroom in the facility where they are located. Most bases do their own baking in the dining halls. In these cases, you may include the bakery costs in the dining facility account. The Air Force is changing over to bakery mixes instead of scratch cooking to make it easier on the food service personnel. Some bases buy pre-cooked bakery goods from off-base firms.

Carry-Out Service. Carry-out services are designed to allow personnel to pick up from dining facilities "fast foods" to be eaten elsewhere. Not all bases have these services; they are provided as a luxury. Carry-outs are not designed to provide mission support. If ground feeding is necessary for mission support, many lunches must be picked up for personnel unable to eat at the dining facility. Multiple feeding is to be provided from flight kitchens or the main dining hall.

Exercises (224):

1. Which food service activity usually feeds the bulk of the base enlisted population?

2. When are pastry kitchens authorized?

3. Flight kitchens are designed to provide meals to whom?

2-2. Storeroom Operations

To serve your customers a good nutritious meal, you must start with nutritious food. It is important that you

know the proper storage procedures for each food item to assure that it remains as fresh while in storage as when it was received. To do this, you must be knowledgable of the types of facilities used, the layout and arrangement of the storeroom, refrigeration techniques, and the sanitation requirements for food storage areas.

225. Name the four levels of food inspection and define shelf life.

Inspection of Incoming Subsistence. Assume that you are the storeroom clerk. You have just received a box of fresh, beautiful, delicious apples that were shipped from Idaho. You put them aside and forget to inspect the apples before you set them in the refrigerator. A few days later, you notice an odor coming from the box. All of the apples have brown spots on them and a few are rotten. Because you did not sort out the few spoiled apples when you received them, you must throw away the whole box. The diners won't be served fresh apples, and the Government lost money. (The apples also should have been ordered so that they could have been scheduled to be served immediately.)

Food inspection should be a part of normal storeroom procedures. The storage period and the dining hall inspections begin when the food reaches your dining hall; and you, as the storeroom clerk, check the items for quantity and quality before you sign for them. You must ensure that all food supplies are properly stored to prevent spoilage or damage from the time you receive the food until the time it is eaten. You should make food storage inspections at least once a day.

Before the food reaches your dining hall, there are levels of inspections in which certain requirements must be met. The Department of Agriculture requires that food meet quantity, quality, and condition standards. They also consider the storage qualities, handling, and shipping conditions. When the food arrives at your base, the medical food inspector must inspect all foods. The commissary officer is responsible for all food items received, stored, and issued at base level. The food service officer is responsible for all foods received within the food service facilities; however, the storeroom clerk actually does the inspections.

As you can see, the food you receive has been checked and doublechecked before it gets to you. Some food could have been shipped a long way, handled many times, and/or stored for a long time. Even nonperishable food is perishable under these circumstances, and there is danger of spoilage and a loss of "shelf life." Shelf life means the period of time food can be stored before it must be used.

When receiving food in the dining hall, check all food for discrepancies in weight, count, etc., and note the discrepancies along with your initials on the AF Form 287, Subsistence Request. Set aside any questionable food items of large amounts for the medical food inspector to inspect. If it is a small quantity of food, discard it. Quantity check is important because you need a certain amount of food to feed the diners. Quantity check also concerns money. Quality checks ensure that the diners will be eating good food. Check the color, size, odor, flavor, and appearance.

Exercises (225):

1. What are the four levels of food inspection?

2. Define shelf life.

226. Differentiate between perishable and nonperishable food and specify the proper storage procedures for each.

In any storage area there must be adequate space to allow for orderly storage of different types of foods. Stored food should be located near the receiving and preparation areas. Food should be stored to maintain the natural state in which it was received (canned, frozen, fresh, etc.). To determine how the food should be stored, consider the type and form of the food.

There are two types of storerooms in the food service facility—storerooms for perishable food and storerooms for nonperishable food. Most perishable food must have constant refrigeration. Nonperishable items do not require refrigeration.

Storage of Perishable Food Items. Perishable food has a large range of forms and types of fresh, frozen, and lightly cured meats; fresh and frozen vegetables and fruits; and certain dairy products such as eggs, milk, and butter. When perishable food items are unloaded at your facility, they should be in the same condition as when they were purchased. Generally, you can determine their condition by the following factors.

a. Color—typical of the particular food item being inspected.

b. Odor—suggesting the condition of the product.

c. Flavor—characteristic of an item in prime condition.

d. Appearance—closely associated with quality; however, a good appearance does not always signify quality.

Failure to provide proper storage at proper temperatures results in spoilage from wilting, softening, discoloration, modling, rotting, sliming, and souring. Weight and nutritional losses also occur when food is not stored properly.

In addition to preventing food spoilage, proper refrigeration and the use of recommended practices ensure continued high value and quality of food. The temperature chart (fig. 2-1) shows the different temperatures for perishable food items.

Dining halls have refrigeration divided into freezers (+10 to −10°F) and refrigerators (32 to 45°F). Dining halls usually have two or three walk-in refrigerators. One is used for storing meat and the other for storing fresh fruit, fresh vegetables, and dairy products. Neither freezers nor refrigerators should be overcrowded; overcrowding reduces air circulation. Air circulation ensures uniform temperatures and prevents spoilage. High humidity is important in refrigeration. It keeps the food from drying out and helps the temperature penetrate the food.

RECOMMENDED TEMPERATURES FOR
REFRIGERATED PERISHABLE FOOD

	BODY TEMPERATURE 98.6°F BACTERIA GROWS BEST HERE
MAXIMUM ACCEPTABLE TEMPERATURE FOR STORAGE OF ALL PERISHABLE FOODS EXCEPT	45°F
FRUITS VEGETABLES AND MOST OTHER PERISHABLE PRODUCTS	35° TO 55°F
DAIRY PRODUCTS	32°F TO 45°F
MEAT & FOWL	
FISH & SHELLFISH	
FROZEN FOOD CAN BE KEPT ONLY 7 DAYS AT THIS TEMPERATURE	+10°F
FROZEN FOODS	0° TO -10°F

Figure 2-1. Temperature chart.

The refrigerator (in Air Force jargon it may be called the chill room, reach-in, walk-in, or cooler) should be maintained at the temperature for foods shown in figure 2-1. If the temperature falls too low, slow freezing action starts that can affect the quality of the contents. If the temperature is permitted to rise above the recommended temperature, bacterial action may start. The chill room temperatures must be carefully controlled, and temperature fluctuations must be held at a minimum.

The freezer room is a means of maintaining subsistence in a frozen state. Some of the frozen foods that will require freezer storage are: Meat and meat products including poultry and seafood products, commercially frozen milk, fruits, and vegetables.

Inspection and storage of fresh fruits and vegetables (35 to 55°F). Do you store bananas, grapes, and lettuce the same way? Different fruits and vegetables require different care and storage. Bananas need no refrigeration, but they must be kept dry and aerated. Lettuce requires refrigeration and moisture for crispness; the leaves and butts should be trimmed before storage. Grapes must be refrigerated immediately after they have been divided into bunches. They must be kept dry and should have air around them. As you can see, each perishable food item has special requirements for storage. Exceptions to the perishables needing refrigeration are such items as potatoes and onions. They require only a cool, dry storage area.

Inspection and storage of fresh meats and meat products (32 to 45°F). Meats that are recieived in the dining hall are normally top quality, since they are the most inspected food items. Nevertheless, meat may occasionally go bad. Test it with touch, smell, and sight. Watch for bruises, blood clotting, or freezer burn; cut off these portions. If you find foreign particles on the meat, wash it

off in running water. Any meat that is off color, has a disagreeable odor, or is slimy should be inspected by the medical food inspector before it is prepared. Check all meat for quality. Meat quality will be discussed in a later lesson. Meat should be refrigerated as soon as it reaches the dining hall.

The temperature of the chill room is ideal for the storage of fresh meat and meat products; smoked and salted ham or bacon; and frozen meat and meat products that are ready to be thawed. When smoked meats are to be placed in the chill room, they should be wrapped or packaged separately. If they are not, their smoky odor may penetrate other foods.

Inspection and storage of dairy products (32 to 45°F). The dairy products chill room is used for the storage of fresh and dried eggs, fresh milk, dried milk, butter, oleo, margarine, lard and lard substitutes, fresh yeast, and various types of processed cheese. One important fact to remember is that most dairy products will absorb the flavor of other products stored close by. This is the main reason why fruits, vegetables, and other items are not stored in the same chill box if possible.

Cold eggs will "sweat" when left in a warm room. Wet cardboard affects the flavor of the eggs, and wet crates will cause eggs to become moldy. So transfer eggs to dry containers if their containers become wet. Eggs can also be spoiled by freezing, and they can be frozen as a result of being stored too close to refrigerated pipes. They deteriorate very rapidly if subjected to heat; the yolk breaks easily and the white becomes watery.

Uncovered cheese and butter products will become rancid rapidly. If they accidentally freeze, their flavor and texture will be unsatisfactory. If cheese becomes modly, cut the moldy part off and use the cheese if it is still acceptable. Dairy products are usually dated; it is easy to read the expiration date to check for freshness. Also inspect these products for cleanliness and soundness of cartons and wrappings. Since eggs are already graded, inspection of them is usually limited to seeing whether or not there is any breakage.

Storage of Nonperishable Food Items. Canned goods make up the bulk of the nonperishable items. Other nonperishables are in bags or boxes and contain such items as flour, cereal, sugar, dry beans, and pasta products. Nonperishables may be sotred at 40 to 60°F for a reasonable length of time. The ideal storage areas should be cool, dry, clean, well-ventilated, and odorless. With this kind of storage only periodic inspections are necessary. In tropical or very wet climates nonperishables must be inspected constantly. The shelf life is much lower in these areas because the ideal conditions cannot be maintained and there will be spoilage.

There are many types of can spoilage that may become apparent either on receipt or during storage. Spoilage of canned goods is not prevalent in the United States, but it is often a problem overseas. The most common types of can spoilage are discussed in the following paragraphs.

A "swell" is a can that has both ends bulged out. A swell is caused by micro-organisms, chemical reaction of the contents upon the metal of the container, insufficient vacuum, or overfilling. In general, products in such cans are not safe for human consumption and should be rejected. There are exceptions to this rule. In hot weather incorrectly filled cans of syrup and molasses may swell but be in perfect condition. Slightly overfilled cans of apples and sauerkraut tend to swell in above normal temperatures without deterioration. Under normal conditions such cans should return to their original shape without spoilage.

A "springer" may result from a mild swell. It may be caused by overfilling, insufficient exhausting, or evolution of hydrogen dioxide gas through bacterial action. When one end is pressed with the fingers, the opposite end bulges out. Products in such cans are not safe for human consumption and should be rejected.

A "flipper" is a can having little or no vacuum and with loose ends that may be pushed in. When one end is struck against a flat surface or jarred, the other end may be forced out. The end forced outward usually may be pushed back in by hand without forcing the other end out. Contents may or may not be sound, depending on whether or not fermentation is observed or an offensive odor is detected.

A "flat sour" is a type of spoilage resulting from the growth of certain organisms that produce large amounts of acid without gas formation, giving the product a sour taste, a sour odor, and a turbidity to its liquid. The can is normal in appearance. Starchy vegetables are most often involved in this type of spoilage, which is caused by improper cooling after processing.

A "leaker" is a can in which the crimp, seam, or body leaks. This is caused by fault seaming; pinholing by corrosion from the inside of the can or rusting from the outside; bursting from gas pressure developed in the can by bacterial decomposition; the formation of hydrogen gas through corrosion; or a physical rupture through rough handling.

Pinholing may result from either internal or external corrosion. Internal corrosion is the result of an acid product attacking the interior of a can that has been imperfectly coated with enamel or tin. External corrosion and pinholing result when a can is rusted by rain or sweating. Canned goods stored within a few miles of the sea are susceptible to external corrosion. If you notice any defects in cans, set them aside and notify your supervisor.

When inspecting boxed and bagged products, be alert for insect and rodent infestation. Dampness is also an enemy of boxed and bagged foods. It can cause lumpiness, mild, or mildew. If foods have these signs of spoilage, have the medical food inspector inspect the foods. Dry foods in a high humidity area are more likely to deteriorate because of dampness. Be especially alert to this problem in humid areas.

Exercises (226):

1. What are the two types of storerooms in food service?

2. Freezers should be kept in what temperature range?

3. Why should dairy products be stored apart from fruits and vegetables?

4. What are the six types of can spoilage?

5. What four factors allow you to determine the condition of perishable foods?

6. Is it acceptable to use moldy cheese?

7. Refrigerators should be kept in what temperature range?

8. What is the danger in putting too much food in either a freezer or a refrigerator?

9. Besides keeping food from drying out, why is high humidity important in refrigeration?

10. Why must smoked meats be wrapped or packaged separately before they are placed in the chill room?

11. Most nonperishable items are in what kind of container?

12. What do you call a can with both ends bulged out?

13. What do you call a can that has little or no vacuum?

14. What causes pinholing?

227. State the requirements for storeroom layout and stock rotation.

Stock Rotation. Rotation of stock is mandatory for all forms of subsistence. Use the old stock before you use the new stock. The policy of "first in, first out" is to say that all old stock should be used before any new stock is opened. Set up a system in the storeroom so that all storeroom personnel know what is old and what is new. One way is to date all supplies that come into the storeroom. Another way is to place all new items to the rear of the old items.

Food service facilities are normally furnished with adequate storage space and facilities. When they are properly used, subsistence supplies will not deteriorate.

Layout of the Storeroom. The ideal storeroom has: adequate loading and unloading facilities; sufficient ceiling height for stacking packaged supplies: sufficient shelving, bins, and lockers; adequate floor space; adequate heating and ventilating facilities; convenient location with respect to preparation and serving areas; adequate provisions for security, with doors and windows that can be locked; proper screening for all outside openings; and adequate refrigeration.

Refrigeration Techniques for the Storeroom. When using the refrigerated space, you can be assured of satisfactory results if you follow these rules: Store food loosely; store meats away from walls, coils, and other meats; cover nonpackaged foods; place new stock in back of old stock; clean the area frequently; defrost before one-fourth inch of frost accumulates; and open the door only when necessary and avoid overcrowding.

Each refrigerator used in food service activities should be equipped with the following six things:

(1) A thermometer that works accurately.

(2) A temperature chart on which you record temperature readings at times specified by local regulations (AF Form 638, Refrigeration Unit Standard Temperature Chart).

(3) A warning sign, such as "look before locking," or words to that effect.

(4) A sign that denotes the type of food stored within and the temperature requirements.

(5) A safety lock that permits the door to be opened from the inside.

(6) An electrical light, preferably mounted overhead and protected by a grid-type metal cover.

Sanitation Requirements for the Storeroom. Keep all storage space including refrigeration units—clean, orderly, and as dry as possible. To avoid dampness, use as little water as possible when mopping a storeroom area. If possible, use a fan to dry the area faster. Clean the space used for dry storage as frequently as required by local authorities. Refrigeration space should be cleaned daily.

All these factors make it easier to keep an even flow of stock rotation. One more thing to remember—you should store all foods in the state they are in when you receive them. If food was frozen when received, store it in the freezer. If it is a refrigerated product like eggs, store in the refrigerator. If it is canned or nonperishable, you can store it in the storeroom.

Exercises (227):

1. Define rotation of stock.

2. State at least four refrigeration techniques that contribute to the life of food.

228. State the purpose of stock controls.

Stock Controls. Stock control is exactly what the term implies. It is the process of controlling supplies kept on hand to support our mission. The entire purpose of the storeroom function is stock control. It consists of ordering, receiving, storing, and issuing food supplies, and keeping detailed records of each transaction in which food is brought into, or removed from, the storeroom. Accuracy is extremely important to stock control. People who work in storerooms must be alert and make every effort to ensure that receipts, issues, and inventories are correct. Failure to do so will cause out-of-stock or out-of-balance conditions and serious problems in the facility monetary account. Here are nine of the most common mistakes made in a storeroom operation.

(1) Issuing more less of an item than is recorded on the AF Form 148, Senior Cook's Requisition, or AF Form 129, Tally In—Out.

(2) Issuing or returning food without signing for it on an AF Form 148 or AF Form 129.

(3) Signing in more or less of an item than was received.

(4) Failure to check food received from vendors or commissary for quantity.

(5) Mistakes in addition, subtraction, or weight in issuing bulk items or posting the AF Forms 147, Dining Hall Stock Record.

(6) Improper inventory procedures.

(7) Letting cooks or food service attendants get their own food from storage areas.

(8) Recording the wrong prices on issue documents.

(9) Returning food to stock on an AF Form 148, and not putting it back in the storeroom.

As you can see, all of these can easily be prevented by paying close attention to the task being done, doublechecking your work, limiting access to the storage areas, and following established procedures.

To prevent fraud, waste, and abuse in food service, good stock controls are necessary. These rules provide an excellent foundation for good stock control. All storerooms should be designed with security in mind. This includes locked doors and barred windows for proper protection for food. The food service officer must designate (in writing, by name or duty title) the person responsible for the security of food, and storeroom access is limited to that person and to food service supervisory personnel. Issues to the kitchen storeroom are only made to the senior cook on duty. All bulk subsistence received by, issued from, or returned to the storeroom is weighed and counted. All excess food from deactivating food service dining halls is transferred to other food service activities or returned to the commissary per commissary regulations. If this procedure is not practical the food is inventoried, documented, and (with written MAJCOM approval) donated to local charities.

Exercises (228):

1. Define the term stock control.

2. List the common mistakes made in a storeroom operation.

3. What duties or actions does stock control consist of?

4. What designation must the food service officer document in writing by name and duty title?

229. State how to get operational rations.

Operational Rations. We get operational rations the same way as regular food supplies, with only minor variations. Food service activities prepare an AF Form 287, Subsistence Request, listing the rations or prepackaged meals they need, the expected date of consumption, and the justification for the items. If base operation and maintenance (O&M) funds are to be used for the rations, include a statement from the base accounting and finance office to show the accounting classification and that enough money is available to pay for the meals. The completed forms are then forwarded to the commissary officer. When the items are issued, the commissary officer furnishes one copy to the receiving activity and returns a priced and extended copy to the food service activity within 2 workdays.

Exercises (229):

1. What information must be placed on the AF Form 287 by accounting and finance to use base O&M funds for operational rations?

2. What information does food service place on the AF Form 287 for operational rations?

230. State how to properly thaw perishable subsistence.

Proper Food Thawing Procedures. A major area of concern for food service managers and medical food inspectors is the proper thawing of meats. Items are to be thawed under refrigeration, except under emergency conditions.

AFR 161-26, *Control of Foodborne Illness*, outlines the procedures for thawing meats properly. When potentially hazardous foods have been frozen, thaw them according to the priority listing of methods below.

(1) As part of the conventional cooking process, do not attempt this with large meat items (such as whole turkeys and large roasts) because the exterior will be overcooked long before the interior thaws. Thoroughly thaw these items before cooking.

(2) Frozen foods should be thawed out in refrigeration units at temperatures of 45°F (7°C) or below.

(3) A microwave can be used for thawing as part of an uninterrupted cooking process or when the food will be transferred immediately to conventional cooking units. (Not for large meat items.) Also follow the manufacturer's instructions in using the rapid-thaw cabinet.

(4) AFR 161-26 allows thawing to begin at room temperature, then store at 45°F (7°C). Thawing out food under potable running water at a temperature 70°F (21.1°C) or below, with sufficient water velocity to agitate and float off loose food particles into the overflow (least preferred method) is another thawing method.

Although the previously mentioned thawing procedures are acceptable under the provisions of AFR 161-26, there are some drawbacks.

Thawing meats at room temperature results in excessive loss of liquids, loss of flavor, and contributes to a tough cooked product. Cooks receiving frozen meat usually do not have time to compensate by extending the normal cooking time. Therefore, improper preparation and cooking techniques are often used to make sure the item is prepared on time.

Improper thawing of meats is a major cause of overcooked, dry, tasteless Meat entrees on the serving line. meat items should be taken out of packing boxes, unwrapped, and covered for thawing. Seventy-two hours are normally required to thaw meat items under refrigeration (for example: meats to be cooked Wednesday should be placed in thaw boxes early Sunday). Many managers have found that it is best to label items being thawed with the date and meal these items are to be used.

Remember that proper planning and coordination between the dining facility supervisor and storeroom personnel is necessary in ensure that proper thawing techniques are followed.

Exercises (230):

1. What publication governs the procedures for properly thawing meat?

2. What is the proper temperature to thaw frozen foods in a refrigerated unit?

3. Explain how a microwave oven can be used in the thawing process.

4. Who's responsibility is it to properly thaw out frozen meat?

5. Which method of thawing is the least preferred?

231. State the procedures used to properly conduct an inventory.

At the close of the last day of the accounting period, regulations require a physical inventory of all food to determine the actual value of food on hand, the accuracy of records, and the effectiveness of internal controls. DD Form 160, Inventory of Class Quartermaster Supplies, records this physical count. The inventory includes all meat on hand in the meat processing facilities; all bread in the bread and pastry kitchens; all food in the dining halls not prepared for consumption, except condiments issued from the store room; all unopened containers regardless of issue or specified consumption dates; and all food in the storeroom or refrigerator.

To prepare DD Form 160, the following is done. To expedite the inventory, the nomenclature may be typed according to the sequence in which the AF Forms 147 are maintained. Enter date and the name of the person responsible for the food service account.

At the close of business on the last day of each month, the food service officer (FSO) has a physical inventory taken of all food supplies at each food service facility. The FSO determines whether a physical inventory is taken at any other time during the month to control the account. The results of any physical inventory are reconciled with AF Form 147, Dining Hall Stock Record, and the book inventory. If there are differences, recount to reconcile. If the physical count is correct, enter the count, physical inventory, and date in red of AF Form 147. A physical inventory must be taken by a disinterested person, appointed by the chief of services, at the end of each fiscal year.

Items are priced on the inventory at the prices listed on AF Form 147. Consolidated preparation facilities use prices from AF Forms 287 or equivalent stock record cards. If like items in stock were received at different prices, enter each item priced and extended at its own price. Proper inventory procedures require that the closing inventory of one period must be the same as the opening inventory of the following period.

Two copies and proper certification are required if a disinterested person helps in taking the inventory, or if the account is transferred from one responsible person to another. One copy is filed with AF Form 1119, Monthly Monetary Record, and the other copy is retained by the responsible person from whom the account is transferred or by a disinterested person. One copy of the inventory is sufficient at all other times. A statement that the inventory is true and correct is typed on the last page and signed by the person taking the inventory.

For proper control, the FSO is also required to certify the inventory. The value of the ending inventory of the installation food service account must not be more than 25 percent of the total earned income for the period. Other exceptions to the 25 percent inventory limit must be approved by HQ AFESC/DEHF.

Exercises (231):

1. What is the purpose of taking a physical inventory?

2. Who determines whether a physical inventory is taken at some other time during the month?

3. With what form is DD Form 160 compared to check for accuracy?

4. When is a disinterested inventory conducted?

232. Define the term excess cost and when it is authorized.

Excess Cost. Excess cost is the amount of money a substitute food item exceeds the replaced food item's price listed in Federal Supply Catalog C8900 PL or LP price. It is necessary to provide quality food to the consumer without affecting the BDFA. However, because of the excessive strain on the dining hall budget, excess cost should be avoided. Good coordination between the commissary, dining halls, and medical inspection personnel should help prevent excess cost.

Excess cost is authorized on the following conditions.

Forced substitutions. This is an item the base medical food inspector determines must be used within the next 60 to 90 days in order to prevent the item from spoiling. The commissary issues it to the dining halls in place of a like item, for example the commissary may issue pork roast in place of pork loin. The 60 to 90 days allows the dining hall to readjust its planned menu. In order to claim excess cost, the forced item must be more expensive than the item for which it was substituted.

Forced issues. Forced issues are done when the base medical food inspector identifies an item in the commissary as highly perishable and the item must be used within 96 hours in order to prevent spoilage. The commissary issues it to the dining hall for immediate consumption. Excess cost may be used only when the forced-issue item is substituted for an item that costs less than the forced item. Food Service must not accept a forced-issue item that is in such poor condition that it cannot be eaten. Food Service cannot be forced to take operational rations near expiration, such as Meals, Ready to Eat (MREs), Meal, Flight Feeding (MFFs), etc.

Not in stock (NIS). If a troop issue item is not in stock, a like item of equal or less value is not in stock, and a menu change is not feasible, excess cost may be taken for a higher priced item.

Beverages for security guards. You may claim the whole cost of beverage supplied to security guards performing duties outdoors because they receive them free of charge.

Alert exercises. When an exercise is called during a meal and replacement of the food to the individual is done, then excess cost is authorized. In order to claim excess cost under these circumstances, it must be documented on AF Form 148, Senior Cook's Requisition, showing the value of the replaced food. The replaced food must not exceed the original amount of food the customer had before the exercise.

Ground beef. Excess cost is authorized in alert facilities because they must use 100 percent ground beef instead of the 20-percent-soy beef that causes gaseous problems in alert crews. The difference in price between the ground beef and the soy beef is the excess cost.

Unsatisfactory subsistence and condemned items. Any item that had a hidden defect and was excepted by Food Service can get excess cost. Let's say you had hams that were excessively fatty and instead of getting 100 portions after cooking, you got 80 portions. The cost of the 20 lost portions may be taken as excess cost on AF Form 148. If the medical food inspector determines a food item in your facility is unfit for human consumption, the inspector condemns it on AF Form 129, Tally In—Out. You may show the cost of the item on your inventory and take it as excess cost.

New or test food items. These food items are directed by HQ AFESC to be served in a food service facility. Such items may take excess cost for the difference between the new or test item and the original menu item it is substituting, if the test item is higher priced.

Training. Excess cost is authorized for food items used for training food service personnel when serving the food in a dining hall would be impractical. Excess cost will be computed on AF Form 148.

Operational rations. You may take excess cost when using operational rations during testing, exercises, training research, or education. Authorized allowances for

operational rations are listed in AFR 146–15, *Flight Feeding*, and AFR 146–7, *Food Service Management*.

Exercises (232):

1. Define the term excess cost.

2. Describe a forced issue.

3. When would you be able to claim excess cost in a not-in-stock situation?

4. When can you claim excess cost on a new or test food item?

2-3. Subsistence Records

We now come to one of the most important parts of food service—keeping track of money. Some people dread paperwork; but it is very important to you, your supervisor, and the Air Force.

Food Service spends more than $90 million a year on food. If you are in charge of a dining hall account, you could be handling as much as $20,000 worth of food a month. You can bet that the Government wants close accounting for this large sum of money.

233. State the definitions of various food service accounting terms.

If you are to learn food service accounting, you must familiarize yourself with the following terms and abbreviations. You will use them throughout your food service career.

A La Carte System (ALACS). An Air Force system adopted from the civilian cafeterias in which military members on separate rations, basic allowance for subsistence, (BAS) pay for each item they select. It does not affect meal card, subsistence in kind, (SIK) personnel.

Basic Allowance for Subsistence (BAS). A monetary amount paid to enlisted members to take the place of a meal card. BAS is usually authorized for members who live off base or who are married to make up for meals the members consume away from the dining hall. BAS is a privilege; if abused, it can be taken away.

Book Inventory. The dollar value of the opening inventory, plus purchases, plus or minus transfers, and minus issues to the kitchen.

Basic Daily Food Allowance (BDFA). A prescribed monetary amount of food required to feed one person nutritionally for 1 day. The dining halls receive a percentage of this daily amount for every meal that SIK meal card personnel eat in the dining halls.

Common Service. Active duty members of other branches of the service in which the reimbursement money comes from a common defense fund.

Cross Service. Members of service branches other than active duty in which the reimbursement comes from separate funds, such as Air Force Reserves, Air National Guard, Civil Air Patrol, etc.

Subsistence Credit Allowance Management System (SCAMS). An Air Force accounting system based on the number of patrons per day and the BDFA.

Subsistence in Kind (SIK). Food furnished to enlisted people at Government expense. Personnel eating at Government expense will normally be issued a meal card.

Recipe and Menu Pricing System (RAMPS). An Air Force computer system that calculates recipe cost and the selling price of individual portions of each menu item for ALACS dining halls.

Physical Inventory. An actual count of your food inventory, which you must record on DD Form 160 or under A La Carte on the item inventory listing.

Exercises (233):

1. ALACS is an abbreviation for what?

2. Define basic allowance for subsistence.

3. Define book inventory.

4. Food furnished to enlisted people at Government expense is called what?

234. Give the names and purposes of selected food service forms.

AF Form 287, Subsistence Request. This form is used to order food from the commissary for the dining halls. Four copies (or more if required by local policy) are prepared every time you want to place an order to one of the commissary warehouses. Specify which warehouse by putting the name of the warehouse in block 9 of the 287 (fig. 2-2). The dining hall supervisor keeps the fourth copy for reference when making out menus. The other three copies are sent to the commissary officer at least 48 hours (preferably 72 hours) before the issue date.

When the storeroom person picks up the food from the commissary, he or she signs block 10 of AF Form 287 and takes the third copy back to the dining hall. At the commissary, the unit price from either the local purchase

SUBSISTENCE REQUEST

1. INSTALLATION: BLAKE AFB PA

2. ORGANIZATION: TWILIGHT DINING-HALL

3. CONSUMPTION DATE(S): MONTH MARCH; DAYS 13-15

4. DATE FOR ISSUE: 12 MAR 85

5. REQUEST NUMBER: D.H 3-7

6. FUND CITATION: 6743500-324-P562.11-503225

7. SIGNATURE OF REQUESTING OFFICIAL: William Wright, MSgt, USAF

ITEM NO. A	NOMENCLATURE B	NSN C	UNIT D	QUANTITY DESIRED E	QUANTITY ISSUED F	UNIT PRICE G	TOTAL COST H
1	Beef, Shoulder, Chuck (Out Roast)	8905-00-133-5887	LB	40	40	1.65	82.50
2	Fish Portions, Raw, Bnd.	8905-00-935-4765	LB	24	50	.91	45.50
3	Bacon, Sliced (Bulk)	8905-00-403-9592	LB	18	45	1.53	68.85
4	Beans, Lima, Frn.	8915-00-127-7984	LB	24	24	.45	10.80
5	Corn-on-Cob, Frn	8915-01-135-5787	BX	2	2	9.23	18.46
6	Juice, Orange, Conc, Frn	8915-00-437-7943	CN	6	12	1.63	19.56
7	Catsup, ind.	8950-00-616-5479	CS	3	3	2.68	8.04
8	Mustard, ind	8950-00-616-5474	CS	2	2	1.82	3.64
9		LAST ITEM					
10							
11							
12							
13							
14							
15							
16							
17							
18							
19							
20							
21							
22							
23							
24							
25							
26							
27							

8. ISSUED BY: Monette Bible, GS-6

9. ISSUE POINT: Perishable

TOTAL COST: 257.35

10. QUANTITIES SHOWN IN COLUMN E HAVE BEEN RECEIVED

DATE: 12 MAR 85

SIGNATURE: John A. Lucas, SSgt USAF

11. VERIFIED BY: George Brown GS-4

12. CONTROL NUMBER: PCF-19

13. VOUCHER NUMBER: FR01546

AF FORM FEB 84 287 PREVIOUS EDITION WILL BE USED.

Figure 2–2. Sample, AF Form 287, Subsistence Request.

list or C-8900PL is annotated in column F on AF Form 287. Then they multiply the quantity issued by the unit price to get the total cost to put in column H. The quantity issued from AF Form 287 is then transferred to AF Form 147.

AF Form 147, Dining Hall Stock Record. This form is designed to control all food supplies in the dining hall. It is a written inventory of all food brought into and out of the dining hall and all food used within the dining halls (fig. 2-3).

When you receive food into the dining hall on AF Forms 287 or 129 and receipts from local vendors, write the date received in column A, DATE, and the quantity received in column B, RECEIVED, on AF Form 147. Add the amount received to the old balance and write the new balance in column E, BALANCE, of AF Form 147. When you issue items on AF Form 148 or 129 you should write the amount issued in column C, ISSUED column. Substract this amount from the old balance in column E and enter the new balance in column E.

AF Form 129, Tally In—Out. This form is used by the medical food inspector to condemn food unfit to eat. It is also used to transfer food from one dining facility to another. It is normally done in two copies, one to be kept by the issuer and the other by the receiver. Local policy may dictate more than two copies (fig. 2-4).

AF Form 148, Senior Cook's Requisition. This form is used by the senior cook or shift leader to draw food from the storeroom. The senior cook fills out the following columns: heading, which includes the DINING HALL NUMBER, the MEAL the food was drawn for, and the DATE; column A, name of food ITEM required; and column B, AMOUNT REQUESTED. The senior cook then gives the 148 to the storeroom clerk. The storeroom clerk fills in the following columns: C, AMOUNT DRAWN; D, amount RETURNED; E, amount USED; F, UNIT PRICE, G, TOTAL cost of each item and TOTAL cost of the meal. The senior cook then signs the SIGNATURE block to verify that the items were used. This form is very important because it is the main record of food costs for each meal. The number of copies of the 148 to be made depends on local policy (fig. 2-5).

AF Form 662, Food Service Production Log. This form is used in the Subsistence Credit Allowance Management System (SCAMS) and ALACS as a guide to plan, prepare, and serve meals. It is a worksheet to inform the cooks what to prepare, how much to prepare, and when to prepare the food items. The dining hall supervisor fills out the heading and columns A through H of the AF Form 662 before meal time, signs it, and posts it in the dining hall where it will be visible to the workers. The shift leader fills

AF FORM 147 FEB 85 PREVIOUS EDITION WILL BE USED.

DINING HALL STOCK RECORD

ITEM CATSUP, TOMATO | NSN 8950-00-127-9789 | UNIT #10 CN | UNIT PRICE 1.94 | NUMBER 1

DATE A	AMOUNT RECEIVED B	AMOUNT ISSUED C	AMOUNT RETURNED D	BALANCE E	DATE A	AMOUNT RECEIVED B	AMOUNT ISSUED C	AMOUNT RETURNED D	BALANCE E
1 JAN 8*				20					
1 JAN 8*	0	4	0	16					
2 JAN 8*	6	1	0	21					
5 JAN 8*	0	5	2	18					

ITEM CATSUP, TOMATO | NSN 8950-00-127-9789 | UNIT #10 CN | UNIT PRICE 1.94 | NUMBER 1

Figure 2-3. Sample, AF Form 147, Dining Hall Stock Record.

TALLY ☐ IN ☐ OUT	SHEET OF	TALLY NUMBER
	REQUISITION OR PO NUMBER	DATE 30JAN85

STATION LOWRY AFB	CARRIER
CONSIGNOR DINING HALL #1	B/L NUMBER
CONSIGNEE DINING HALL #2	CAR NUMBER AND INITIALS
AUTHORITY AFR 146-7	SEAL NUMBERS

CONTAINERS OR PIECES	UNITS PER CONTAINER	CONTENTS	UNIT	TOTAL UNITS	UNIT SALES PRICE	TOTAL VALUE
1	25		LB	25	3.13	78.25

PACKER (Tally out use)	CHECKER
I CERTIFY THAT THE ABOVE LISTED ARTICLES *(Subject to Veterinary Inspection)* WERE INSPECTED BY ME AND THAT THEY CONFORM TO THE CONTRACT REQUIREMENTS.	RECEIVED THE ABOVE LISTED ARTICLES IN APPARENT GOOD ORDER AND CONDITION *(Except as noted)*
	SIGNATURE
INSPECTOR'S SIGNATURE	GRADE OR TITLE / DATE

AF FORM JUL 76 129 PREVIOUS EDITION WILL BE USED.

Figure 2–4. Sample, AF Form 129, Tally In–Out.

SENIOR COOK'S REQUISITION

DINING HALL NO.	MEAL	DATE
3 TWINING HALL	LUNCH	1 JUNE 1985

ITEM A	AMOUNT REQUESTED B	AMOUNT DRAWN C	RETURNED D	USED E	UNIT PRICE F	TOTAL G
Beef Round	160 LB	160 LB	Ø	160 LB	1.85	296.00
Turkey, Whole	75 LB	75 LB	Ø	75 LB	.86	64.50
Potatoes, Fresh	55 LB	55 LB	Ø	55 LB	.55	30.25
Spinach	10 LB	10 LB	Ø	10 LB	.33	3.30
Cauliflower	10 LB	10 LB	Ø	10 LB	.49	4.90
Butter Patties	10 LB	10 LB	Ø	10 LB	1.76	17.60
Butter Prints	4 LB	4 LB	1 LB	3 LB	1.66	4.98
Sugar Granulated	35 LB	35 LB	Ø	35 LB	.36	12.60
Sugar Powdered	3 LB	3 LB	1 LB	2 LB	.47	.94
Beverage Base	2 PKG	2 PKG	Ø	2 PKG	.18	.36
Catsup, Tomato	#10 CN	3 #10 CN	Ø	3 #10 CN	1.94	5.82
		LAST ITEM				
					TOTAL	441.25

I certify that I have received the items listed in Column C. Used the items in Column E in the preparation of the meal, and returned the items listed in Column D.

SIGNATURE OF SENIOR COOK

George Miller, Sgt USAF

AF FORM 148 APR 81 PREVIOUS EDITION WILL BE USED.

☆U.S. GOVERNMENT PRINTING OFFICE 1983 380-979/758

Figure 2–5. Sample, AF Form 148, Senior Cooks Requisition.

out SERVINGS SOLD, UNSERVED PORTIONS, REMARKS, and AMOUNT DRAWN columns after the meal. Under SCAMS, the CASH REGISTER CODE, UNIT PRICE, and SERVINGS SOLD columns are not used. Columns D and E help the dining hall supervisor to make sure that a progressive cooking schedule is followed (figs. 2-6 and 2-7).

AF Form 2039, Ground Support Meal Request. The AF Form 2039 is used for requesting ground support meals, which are meals consumed away from dining halls due to duty. A separate AF Form 2039 will be filled out for SIK and BAS customers. This form allows one authorized person to pick up meals for a large number of people, enabling the rest of the workers to continue working. The AF Form 2039 is only a source document and must accompany an AF Form 1339, Dining Hall Signature Record, 79, Cash Collection Record, or 463, Request for Flight Meals, for accountability (fig. 2-8).

AF Form 463, Request for Flight Meals. AF Form 463 can be used to account for ground support meals, but it is primarily for issuance of flight meals. It records AIRCRAFT NUMBER, DEPARTURE TIME of aircraft, CROSS or COMMON SERVICE, TYPE of meals sold, TOTAL number of MEALS per aircraft, TOTAL CASH taken in, and SIGNATURE of person receiving the meals. Refunds for meals are annotated on the back of the form. AF Form 463 is used to keep track of meals within a 24-hour period. It should be opened at midnight one night and closed midnight the next night. These are controlled forms and must be stored in a safe (figs. 2-9 and 2-10).

Exercises (234):

1. What is the purpose of AF Form 287?

2. What is the title of AF Form 147?

3. Which form is used to transfer food from one dining facility to another?

4. AF Form 463 is used primarily to issue what type of meal?

2-4. Accountable Records

The Air Force not only wants to account for all the food in the dining facility, it also wants to keep track of the number of people eating in the facility. This enables the Government to accurately get reimbursed for the food served to the customers. Let's take a look at the forms necessary to keep an accurate headcount.

235. Identify the types of forms needed and state how they are used to account for meals sold.

The food service officer is responsible for keeping an adequate supply of AF Form 1339, Dining Hall Signature Record, and AF Form 79, Cash Collection Record, for the food service facilities. The forms are prenumbered with serial numbers and the numbers are recorded on AF Form 1254, Register of Cash Collection Sheets. The AF Forms 79, 1339, and 1254 are locked in the staff office safe until they are issued to the dining facilities. The forms are issued to the dining facilities in bulk. It is the dining hall supervisor's responsibility to control the AF Form 1339 and 79 by keeping a copy of AF Form 1254 with the serial numbers in the dining facility safe. We will now discuss these three forms and a few others in greater detail.

AF Form 1339, Dining Hall Signature Record. This form is used to record signatures of SIK (meal card) personnel (figs. 2-11 and 2-12). This enables Food Service to figure out the proper percentage of the BDFA the dining facility accounts are credited for. It also identifies cross service personnel, enabling the Air Force to bill the proper agency. The 1339 is used for the following customers.

- Transit personnel. These people will be identified by orders and DD Forms 2AF, Armed Forces Identification Card.
- Permanent party SIK personnel possessing a valid DD Form 714, Meal Card.
- Reserves, Air National Guard, and all other cross service personnel authorized to eat in the dining facilities.

A separate AF Form 1339 is used for each of the above categories. A separate set will be used for each meal. In the heading block, there is one block for CATEGORY OF PERSONNEL and another for the MEAL. After the meal, the 1339s must be locked in the safe and annotated as returned on the AF Form 1254. The AF Form 1339 is worth money to the Air Force, so it should be treated as such.

AF Form 79, Cash Collection Record. This form is the basic record for collecting and accounting for cash received from the sale of meals (figs. 2-13 and 2-14). All officers, civilians, dependents, and enlisted personnel on leave or receiving BAS are required to reimburse the Government for meals they consume in the dining hall. Personnel not in uniform must present appropriate identification or special orders. Persons required to pay for their meals must sign and complete AF Form 79 in ink or by some other permanent means. BAS patrons who return for seconds pay no additional charge.

At the end of the meal, close out the unused portions of each form (figs. 2-13 and 2-14). Then return the forms and cash collected to the dining hall supervisor. That person will check the cash turned in against the amounts shown on AF Form 79. He or she will sign the forms on the controlling AF Form 1254 and enter the amount of cash collected from each form. On the AF Form 1254 controlling the AF Forms 1339, enter the number of signatures collected from each form in the AMOUNT CASH COLLECTED column, since these forms collect signatures instead of cash.

FOOD SERVICE PRODUCTION LOG

FACILITY: Chevron Dining Hall | DAY: Monday | DATE: 15 Oct 83

I MEAL PRODUCTION — ☐ BREAKFAST ☐ DINNER ☐ BRUNCH ☐ OTHER (Specify) ☒ LUNCH ☐ MIDNIGHT MEAL ☐ SUPPER

NUMBER TO BE SERVED — FORECAST: 200 | ACTUAL:

PERSON RESPONSIBLE A	MENU ITEM B	RECIPE NUMBER C	QUANTITY TO PREPARE D			FINISHED PRODUCT TIME E			SERVING SIZE F	CASH REGISTER CODE G	UNIT PRICE H	SERVINGS SOLD I	UNSERVED PORTIONS J	REMARKS K	AMOUNT DRAWN L
Hogan	Baked chicken	L-125	30lb	20lb	20lb	1030	1130	1230	2 ea	SF	.45	180	20	Serve for Dinner 15 Oct	70 lb
Petrovich	Braised short Ribs	L-44	16lb	8lb	8lb	1045	1130	1215	2 Ribs	SR	.60	86	3	Discard	32 lb
Victor	Mashed Potatoes	Q-57	1 #10 can	1 #10 can		1045	1145	–	4oz	PW	.05	192	8	Discard	2 #10 can
Victor	Sweet Potatoes	Q-67	20cm	10cm	10cm	1045	1140	1215	4oz	TD	.15	168	7	7 ea discard RTS 5cm	40 cm
Crockett	Green Beans	Q-6-3	12lb	6lb	6lb	1045	1130	1215	4oz	PP	.05	141	9	Discard	24 lb
Crockett	Succotash	Q-6-3	12lb	6lb	6lb	1045	1130	1215	4oz	PL	.10	80	2	2 ea Discard RTS 8lb	24 lb
Schmidt	Giblet Gravy	Q46-4	9gal			1045			2oz				½ gal	Discard	

(Section I Meal Production is used for main menu items like the ones shown above.)

II UNSERVED PORTIONS

PERSON RESPONSIBLE A	MENU ITEM B	SPECIAL INSTRUCTIONS C	QUANTITY D	SERVING SIZE E	CASH REGISTER CODE F	UNIT PRICE G	SERVINGS SOLD H	REMARKS I
Schmidt	Sausage	use in Vegetables	8ss		PP			

(Section II Unserved Portions deals with what to do with left overs from the prior meal as shown above.)

37677

AF FORM 662

Figure 2-6. Sample, AF Form 662, Food Service Production Log (front).

III DAILY CONSUMABLES

PERSON RESPONSIBLE A	ITEM B	SERVING SIZE C	CASH REGISTER CODE D	UNIT PRICE E	REMARKS F
Food	Coffee	8 oz	TL	.15	
Service	Iced Tea	10 oz	HP	.10	
ATTENDANTS	Hot Tea	8 oz	HP	.10	
	chocolate Milk	10 oz	HP	.10	
	White milk	10 oz	HP	.10	
	Carbonated Drinks	10 oz	HP	.10	Coke, orange, Root Beer, Sprite
	Butter Mints	2 ea	GB	.05	
	Crackers	2 ea	HL	.05	
	Croutons	2 ea	FD	.05	
	(This section is for items that are served Daily at every meal)				(Daily Consumables)

IV SERVING LINE SET UP

Baked chicken	Short Ribs	Mashed Potatoes	Sweet Potatoes	Green Beans / Succotash	Gravy

V SPECIAL INSTRUCTIONS

(This section is for special instruction or recipes for the cooks from the Dining hall Supervisor, Section IV, above, is a diagram of how to set-up the serving line)

NAME AND GRADE OF DINING HALL SUPERVISOR: John Sims SMSgt

SIGNATURE: John Sims

37579

Figure 2–7. Sample, AF Form 662, Food Service Production Log (Back).

GROUND SUPPORT MEAL REQUEST	1. CONTROL NUMBER	2. DATE
3. TO:	4. FROM:	

Request Ground Support Meals be issued following personnel for consumption away from the dining hall. _____ persons receive BAS, and _____ are authorized SIK. Consumption time _____ hours.

NAME A	GRADE B	REIMBURSEMENT			MEAL CARD NO. F
		MEAL RATE C	SURCHARGE D	TOTAL E	
1.					
2.					
3.					
4.					
5.					
6.					
7.					
8.					
9.					
10.					
11.					
12.					
13.					
14.					
15.					
16.					
17.					
18.					
	TOTAL				

I certify that the above is true and correct to the best of my knowledge and that these personnel are not able to eat in the dining hall because of duty reasons.

5. NCOIC/OIC NAME AND TITLE	6. GRADE	7. SIGNATURE

8. MEALS INDICATED ABOVE WERE ISSUED BY

NAME AND TITLE	GRADE

9. MEALS RECEIVED BY

NAME	GRADE	DATE	HOUR

AF FORM JUL 81 2039 PREVIOUS EDITION WILL BE USED.

☆U.S. Government Printing Office: 1981—360-979/371

Figure 2–8. Sample, AF Form 2039, Ground Support Meal Request.

REQUEST FOR FLIGHT MEALS

1. INSTALLATION: BLANK AFB

2. SERIAL NUMBER: 0001

3. DATE: 5 MAY 85

AIRCRAFT NUMBER (A)	DEPARTURE TIME (B)	TYPE FLIGHT MEAL DESIRED (Use separate line for each type) (C)	REIMBURSEMENT (Indicate number of meals at each rate. If Cross-Service indicate agency as USMA, ROTC, etc. If Common-Service indicate as A, N, MC. If other, indicate amount.) NONE	CRS-SVC	CMN-SVS	SNACK .45	SNACK .50	.90	1.10	MILC 1.50	BULK LIQUID COFFEE	OTHER	TOTAL MEALS (E)	TOTAL CASH (F)	I certify that I have questioned or caused to be questioned each passenger and crew member as to their ration status and the information opposite my name is correct to the best of my knowledge. (G) SIGNATURE: TRAF OFF, ACFT COMDR OR DESG REPR.
KC-154	0330	#3 sandwich						1	9				10	10.10	Major John Hill
		#4 Fruit pad						1	9				10	10.10	Major John Hill
EC-634	0415	#2 SNACK					3						3	1.50	Capt Joe Moore
		#4 sandwich							10				10	11.00	Capt Joe Moore
B-251	0530	#7 Fruit Pad							7				7	7.70	MSgt Jim Cook
		sandwich							7				7	7.70	MSgt Jim Cook
		1 gal COFFEE									1 gal		1	.60	MSgt Jim Cook
							LAST ENTRY								

I hereby acknowledge receipt of the total amount shown for the flight meals and/or beverages listed above.

DATE	SIGNATURE OF TRAFFIC OR OPERATIONS OFFICER			
5 MAY 85	Lonnie White Lt	SUB TOTAL		50.10
DATE	SIGNATURE OF FLIGHT KITCHEN SUPERVISOR: A.C. Doe MSgt	LESS RE-FUND	B251	16.00
DATE	SIGNATURE OF FOOD SERVICE OFFICER: Earl Johnson Capt	TOTAL		34.10

REFUND MUST BE IDENTIFIED ON REVERSE SIDE

AF FORM MAY 72 463 PREVIOUS EDITION IS OBSOLETE.

Figure 2-9. Sample, AF Form 463, Request for Flight Meals (Front).

REFUNDS FOR MEALS PAID FOR ON PAGE ONE

(When using this page, turn carbon. If additional space is required use plain bond paper. Prepare same number of copies as AF 463)

INSTRUCTIONS

Refunds may be made in accordance with AFM 146-2, for unopened meals that must be returned through no fault of the individual. Arbitrary cancellation of meal orders is not authorized.

CERTIFICATE

I, the undersigned, certify that as a crew member or a passenger of the aircraft number and departure time as listed on Page One, have been refunded the amount listed opposite my signature. This is the same amount I originally paid for a flight meal that I did not consume.

NAME AND GRADE	AMOUNT	NAME AND GRADE	AMOUNT
Jim Cook MSgt	16.00		
		TOTAL FIRST COLUMN BROUGHT FORWARD	
TOTAL THIS COLUMN		TOTAL THIS SHEET	

REASON FOR REFUND

B-2 SI - engine malfunction - abort flight

DATE	SIGNATURE OF TRAFFIC OFFICER, AIRCRAFT COMMANDER OR DESIGNATED REPRESENTATIVE

GPO : 1984 O - 456-716

Figure 2-10. Sample, AF Form 463, Request for Flight Meals (back).

DINING HALL SIGNATURE RECORD	CATEGORY OF PERSONNEL (Check one) ☐ CROSS SERVICE (Specify) ☑ PERMANENT ☐ TRANSIENT	SHEET REGISTER NO. [redacted]

DINING HALL NO.	DATE	TYPE OF MEAL SERVED (CHECK ONE)			MIDNIGHT MEAL
#1	1SEP78*	☐ BREAKFAST ☐ BRUNCH	☑ LUNCH ☐ SUPPER	☐ DINNER	☐ BREAKFAST ☐ DINNER

NO.	SIGNATURE	GRADE	MEAL CARD NO.	NO.	SIGNATURE	GRADE	MEAL CARD NO.
1	Bob Brown	E-1	5398	27			
2	Edmund Rogers	Amn	1234	28			
3	James Ray	SRA	4321	29			
4	Rocky Roads	A1C	3421	30			
5	Mike Port	Sgt	2341	31			
6				32			
7				33			
8				34			
9				35			
10				36			
11				37			
12				38			
13				39			
14				40			
15				41			
16				42			
17				43			
18				44			
19				45			
20				46			
21				47			
22				48			
23				49			
24				50			
25				51			
26				52			

AF FORM JUL 76 1339 PREVIOUS EDITION WILL BE USED.

Figure 2–11. Sample, AF Form 1339, Dining Hall Signature Record (Front).

NO	SIGNATURE	GRADE	MEAL CARD NO	NO	SIGNATURE	GRADE	MEAL CARD NO.
53				78			
54				79			
55				80			
56				81			
57				82			
58				83			
59				84			
60				85			
61				86			
62				87			
63				88			
64				89			
65				90			
66				91			
67				92			
68				93			
69				94			
70				95			
71				96			
72				97			
73				98			
74				99			
75				100			
76				101			
77				102			

I hereby certify that the above individuals have been furnished meals as listed above in a field ration dining hall at Government expense.

TYPED OR PRINTED NAME, GRADE OF CASHIER	SIGNATURE
TYPED OR PRINTED NAME GRADE OF UNIT COMMANDER OR DINING HALL SUPERVISOR	SIGNATURE

Figure 2–12. Sample, AF Form 1339, Dining Hall Signature Record (back).

CASH COLLECTION RECORD	To be completed when the Government is to be reimbursed for meals in cash	SERIAL NO.

1. ORGANIZATION OR DINING HALL: Eglin Dining Hall

DATE: 25 SEPT 85

2. FOOD CHARGES			3. SURCHARGES (S/C)			4. PER DIEM SURCHARGE		
BREAKFAST	LUNCH	DINNER	BREAKFAST	LUNCH	DINNER	BREAKFAST	LUNCH	DINNER
.70	1.50	1.50	.40	.40	.40	1.10	225	225
	BRUNCH	SUPPER		BRUNCH	SUPPER		BRUNCH	SUPPER
	1.65	2.05		.40	.55		2.25	3.35

COLUMN A						COLUMN B					
NAME	GRADE	AMOUNT PAID				NAME	GRADE	AMOUNT PAID			
		B	L/B	D/S	S/C			B	L/B	D/S	S/C
1. Charles Rush	TSgt	70				Balance brought forward from COLUMN A		1.40	3.00	3.00	5.60
2. Bruce Wayne	Capt	70			110	26.					
3. Barry Allen	Sgt		150			27.					
4. Clark Kent	Maj		150		225	28.					
5. Diana Prince	TSgt			150		29.					
6. Erin West	CMSgt			150	225	30.					
7.						31.					
8.						32.					
9.						33.					
10.						34.					
11.						35.					
12.						36.					
13.						37.					
14.						38.					
15.						39.					
16.						40.					
17.						41.					
18.						42.					
19.						43.					
20.						44.					
21.						45.					
22.						46.					
23.						47.					
24.						48.					
25.						49.					
						50.					
COLUMN A TOTAL		1.40	3.00	3.00	5.60	COLUMN B TOTAL (A + B)		1.40	3.00	3.00	5.60

Figure 2–13. Sample, AF Form 79, Cash Collection Record (front).

FOOD CHARGES			SURCHARGES (S/C)			PER DIEM SURCHARGE		
BREAKFAST	LUNCH	DINNER	BREAKFAST	LUNCH	DINNER	BREAKFAST	LUNCH	DINNER
70	1.50	1.50	.40	.40	.40	1.10	2.25	225
	BRUNCH	SUPPER		BRUNCH	SUPPER		BRUNCH	SUPPER
	1.65	2.05		.40	55		2.25	335

COLUMN C						COLUMN D					
NAME	GRADE	AMOUNT PAID				NAME	GRADE	AMOUNT PAID			
		B	L/B	D/S	S/C			B	L/B	D/S	S/C
51.						Balance brought forward from COLUMN C		0	0	0	0
52.						76.					
53.						77.					
54.						78.					
55.						79.					
56.						80.					
57.						81.					
58.						82.					
59.						83.					
60.						84.					
61.						85.					
62.						86.					
63.						87.					
64.						88.					
65.						89.					
66.						90.					
67.						91.					
68.						92.					
69.						93.					
70.						94.					
71.						95.					
72.						96.					
73.						97.					
74.						98.					
75.						99.					
COLUMN C TOTAL						100.					
CASH OVER/SHORT $ 0						COLUMNS C and D TOTAL		1			
EXPLANATION						COLUMNS A and B TOTAL		140	300	300	5.60
						TOTAL AMOUNT DUE ALL COLUMNS		$ 13.00			
						TOTAL COLLECTED		$ 1300			
SIGNATURE AND GRADE OF DINING HALL SUPERVISOR: M. Chandler Tsgt, USAF						SIGNATURE AND GRADE OF PERSON MAKING COLLECTION: Phil Wood, Sgt USAF					

☆ U.S. GOVERNMENT PRINTING OFFICE: 1982-378-387

Figure 2–14. Sample, AF Form 79, Cash Collection Record (back).

AF Form 1254, Register of Cash Collection Sheets. This form is used to control the issue and receipt of AF Forms 1339, 79, and 463 (fig. 2-15). For each bundle of the controlled forms, one AF Form 1254 will be kept in the food service staff office safe and another in the dining facility's safe. When the forms are issued, the receiver will sign the TO WHOM ISSUED block on the 1254, next to the corresponding SERIAL NUMBERS of the issued forms. The DATE ISSUED will also be written in. When the forms are returned, the DATE RETURNED will be entered. The AMOUNT CASH COLLECTED block shows head count for each 1339 or the amount of money collected for each 79 or 463. The person receiving the cash and form signs the CASH RECEIVED BY column. When the forms and money are turned in to Finance, the serial number of the DD Form 1131 VOUCHER, transferring the items to Finance, is annotated in the last column.

DD Form 1131, Cash Collection Voucher (fig. 2-16). This form serves as a receipt for the daily transfer (turn-in) of funds and cash collection sheets from the dining facility to the proper control office, and from the control officer to the accounting and finance officer. The turn-in to finance is accomplished by 1300 hours of the next workday or less daily. Those sites where the control office is so located to be impractical to turn in cash daily, are exempt from the daily turn-in requirement. At those places, cash turn-ins to the control office are made at least twice monthly; one is to be made as of the end of the monthly accounting period. A turn in is mandatory if cash collection exceeds $1,400. Adequate safeguards must be provided at the dining facility to protect the money collected and the cash collection sheets, Dining Hall Supervisor DD Form 1131 is prepared in two copies (original and carbon).

AF Form 812, ALACS Meal Order Record. This form (fig. 2-17) provides a record of item-priced meals requested and served in satellite facilities or away from the dining hall. The form is also used to record cash receipts, except in facilities such as crash kitchens, where a cashier is provided.

Patrons at other satellite food service locations, such as missile sites and dispensaries, order the meals or components they desire. Meals are prepared and issued from the dining hall or the site from which the priced menus are furnished. Meals are consumed at the site, or in other instances are eaten away from the facility. Each person orders a meal and signs the form. The food service site supervisor completes the form, collects the monies indicated from BAS personnel before meal components are issued, and certifies SIK or BAS status.

Exercises (235):

1. Which AF Form is a record of AF Forms 1339, 79, and 463?

2. Who is responsible for keeping on hand an adequate supply of AF Forms 79 and 1339?

3. When eating in a dining facility, what form is used for SIK permanent party personnel?

4. Of what is AF Form 79 a record?

5. What is the purpose of DD Form 1131?

6. What form is used by subsisting personnel at missile launch control facilities for ordering meals desired?

236. State the principle functions of maintaining a change fund.

Maintaining A Change Fund. For the purpose of security, all personnel should be familiar with the protection of funds. There are two types of routine responsibilities, what is done throughout the day and what is done at the close of business.

Lets define a change fund. A change fund is a certain amount of cash used to provide change for BAS customers that subsist in dining facilities. The amount of money in each fund varies from $20 to $100 depending on the particular feeding program you are under (ALACS, SCAMS, MCAMS). Management of controlled forms, receipts, vouchers, and master cash register tapes is important to the effectiveness of the various feeding operations.

The dining facility supervisor is the custodian for the change fund. The cashier maintains the change fund during serving hours. To get the change fund before each meal, the cashier must do an inventory of the cash and applicable AF forms and sign AF Form 1305, Receipt for Transfer of Cash and Vouchers. This form is prepared in duplicate. The AF Form 1305 is used to transfer responsibility of the change fund from the dining facility supervisor to the casher. The necessary guidance for maintaining funds is in AFR 125–37, *The Resources Protection Program*. Now let's look at some of the factors that affect the maintenance of change fund.

The change fund and the applicable Air Force forms are always kept in the safe. The closed-out controlled forms and the cash collected stay in the safe until the next day, when they are turned in to the food service officer. For security reasons, employees may not keep their valuables in this safe. Normally only dining facility supervisors and shift leaders are listed on AF Form 502, Persons Responsible for Storage Facility/Container. Only these people are authorized to open the safe and count the money. Every time an authorized person locks and unlocks the safe, he or she must note the time and initial General Services

SERIAL NO.	TO WHOM ISSUED (Signature)	DATE ISSUED	DATE RETURNED	AMOUNT/CASH COLLECTED	CASH RECEIVED BY (Signature)	DD 1131 VOUCHER NO.
0005210			23JAN85	19.00	[illegible]	CS-101
0005211				17.00	[illegible]	CS-101
0005212		23JAN85	23JAN85	39.00	[illegible]	CS-131
0005213				18.00	[illegible]	CS-102
0005214	Billy Williams			7.00	[illegible]	CS-102

☆ U. S. Government Printing Office: 1980—310-871/4062

Figure 2–15. Sample, AF Form 1254, Register of C. . Collection Sheets.

CASH COLLECTION VOUCHER	DISBURSING OFFICE COLLECTION VOUCHER NUMBER CS-733] RECEIVING OFFICE COLLECTION VOUCHER NUMBER

RECEIVING OFFICE

ACTIVITY (Name and location)
FOOD SERVICE BRANCH, BASE SERVICES DIVISION, LOWRY AFB, COLORADO 80230

RECEIVED AND FORWARDED BY (Printed name, title and signature)
K. QUESINBERRY ADMINISTRATIVE ASSISTANT
FOOD SERVICE BRANCH

DATE: 12 DEC 8*

DISBURSING OFFICE

ACTIVITY (Name and location)
ACCOUNTING AND FINANCE OFFICE, LOWRY AFB, COLORADO 80230

DISBURSING OFFICER (Printed name, title and signature)
E. J. JONES, LT COL, USAF

DISBURSING STATION SYMBOL NUMBER: 4431

DATE RECEIVED SUBJECT TO COLLECTION:

PERIOD: From MIDNIGHT MEAL 10 DEC 8* To DINNER MEAL 10 DEC 8*

DATE RECEIVED	NAME OF REMITTER DESCRIPTION OF REMITTANCE	DETAILED DESCRIPTION OF PURPOSE FOR WHICH COLLECTIONS WERE RECEIVED	AMOUNT	ACCOUNTING CLASSIFICATION
12 DEC 198*	VICTOR D. HELLICKSON ADM. ASST.	BASIC COST OF DINING HALL AND FLIGHT MEALS COLLECTED FROM OFFICERS AIRMEN, AND CIVILIANS REQUIRED TO REIMBURSE THE GOVERNMENT. 12 DEC 198* MEALS $ 474.70 COFFEE $ 2.70	$ 477.40	(Obtain proper classification from Accounting and Finance Office) 57*3500 32* C93 P562 S503725
		SURCHARGE 50%	5.32	57*3400 30* 6320 C93 304670 07 392 S503000
		SURCHARGE 50%	5.33	57*3500 32* C93 P530 S503725
	NOTE: For contract operated dining halls, 100% of the surcharge is deposited to 57*3400			
		TOTAL	$ 488.05	

DD FORM APR 67 1131

Form approved by Comptroller General, U.S. 24 January 1956

Figure 2-16. DD Form 1131, Cash Collection Voucher.

ALACS MEAL ORDER RECORD

1. ☐ BAS ☐ SIK

2. ☐ BREAKFAST ☐ DINNER ☐ BRUNCH ☐ LUNCH ☐ NIGHT ☒ SUPPER

3. DAY/DATE 4 SEPT 85

4. GRADE A	NAME B	MEAL CARD NUMBER C	MEAT D	SOUP E	POTATO F	VEGE-TABLE G	SALAD H	DESSERT I	BREAD J	DRINK K	OTHER L	MENU NO. M	TOTAL PRICE N
A1C	JACK JONES	6294TP	ROAST BEEF	VEG	MASHED	PEAS	TOSSED	W CAKE	WHEAT	MILK			
	PRICE		1.00	.10	.10	.05	.20	.15	.05	.10			1.75
L7	TOM SMITH	N/A	BAKED HAM	VEG	BAKED	G. BEANS	TOMATO	APPLE PIE	WHITE	COKE	S/C		
	PRICE	N/A	.60	.10	.10	.05	.15	.15	.05	.10	.40		1.70
	PRICE												
	PRICE												
	PRICE												
	PRICE												
	PRICE												
	PRICE												
	PRICE												
	PRICE												

AF FORM APR 81 812

Figure 2-17. Sample, AF Form 812, ALACS Meal Order Record. (front)

Administration's Optional Form 62, Safe or Cabinet Security Record.

Before each meal an authorized person counts out the change fund for each cashier. Each amount is written on a separate AF Form 1305 with the duplicate copies given to the cashiers who sign for the change fund. When these transactions are taking place, only authorized people (this also means the cashier who must sign) are allowed in the locked office. After the meal, the change fund and cash received are counted. The cash received is then compared to the amount shown on AF Form 79 or (under ALACS) the master cash register tape. The amount received is written on the AF Form 1305 with the change fund, and each cashier is given a signed copy. At the end of each day, the shift leader must wipe off all fingerprints from the safe. In case there is a break-in, no prints from the day must remain. She or he must also secure the building, ensuring all doors and windows are locked. We must educate our people and strengthen management procedures concerning protection of funds.

Exercises (236):

1. What is a change fund?

2. To get the change fund from the dining facility supervisor, what must a cashier do?

3. What form is used by authorized personnel to provide security for the safe and its contents?

4. After the cash received and change fund are counted, how is the cash received verified?

5. Why are fingerprints wiped off the safe?

6. Who is the change fund custodian?

7. What determines the amount of money maintained in a change fund?

8. How is responsibility for the change fund transferred from the dining facility supervisor to the cashier?

2-5. Cashier Procedures

As an apprentice food service specialist, you normally will not be required to carry out cashier duties since this is usually done by food service contractors. However a situation may arise where you'll be required to perform cashier duties. Also having knowledge of cashier duties will enable you to be able to evaluate their duty performance when, later in your career, you're a food service supervisor. The cashier duties and responsibilities are very important because if carried out correctly they help prevent fraud, waste, and abuse.

237. Identify the duties and responsibilities of cashiers in Air Force food service facilities.

Food service managers must develop detailed cashier instructions for each food service operation. Design the instructions for use both as an training aid and as a reference source for cashier duties. Cashier instructions should be kept current and accessible to the cashier at all times. This lesson provides basic guidelines applicable to all Air Force appropriated fund dining facilities. For contract operations, cashier instructions are prepared in accordance with the performance work statement.

Cashier Duties. A cashier who is courteous and proficient makes a positive contribution to customer relations. Three primary cashier duties include:

(1) Identifying and counting authorized patrons. Subsistence accounting and food production forecasting requires an accurate count of the number of people served.

(2) Obtaining signatures on AF Form 1339 from SIK customers in a subsistence credit allowance management system (SCAMS). In an a la carte system (ALACS), record the identification numbers of SIK personnel into the electronic cash register (ECR).

(3) Collecting proper payment for meals (basic food charge and surcharge, if applicable) under ALACS, record the payment in the ECR. In a SCAMS operation, get legible signatures of cash patrons on AF Form 79.

Cash and Voucher Receipt and Turn-in. Before the start of the meal, cashiers are issued a change fund and accountable forms. The form numbers and the amount of the change fund are recorded on a copy of AF Form 1305, Receipt of Transfer of Cash and Vouchers, kept by the supervisor. Cashiers are responsible for safeguarding the change fund, forms, and all cash collected from sale of meals. When the meal is finished, all cash and forms are turned in to the supervisor using AF Form 1305. After the supervisor determines that all forms and cash receipts are correct, the cashier will receive an AF Form 1305 as a receipt.

At the end of each meal, all unsigned lines are blocked out. In small food service facilities the form may be used for the entire day and then all unsigned lines are blocked out. Review all information, total all columns, and sign the form.

List all cash and form numbers on an AF Form 1305. Total the amount of money collected on all forms and then take out the amount of the change fund. Count the cash and

compare your count with the amounts shown on the AF Form 79. Report any difference between the cash on hand and the totals of AF Form 79 in writing to your supervisor.

All forms and cash collected must be turned in to your supervisor before leaving the dining hall.

ALACS Procedures. Under ALACS, cash collection and meal count information is normally obtained from the cash register reports rather than as described in the preceding paragraphs.

The correct way for recording different categories of customers is described in the cash register operating manual and instructions provided to the cashiers. The price of each menu item is programmed in the cash register by management.

Sales recording errors should be corrected as follows. When a sale is totaled and entered incorrectly, the customer signs the sales receipt. The cashier signs it and places it in the cash register and then enters the correct sale. See the cash register operating manual for use of the void key to change errors before sale is totaled.

At the end of each shift, the supervisor enters the items that were entered incorrectly into the cash register memory and cancels these entries before running the cash register reports. The ECR also provides a readout of all cancelled sales and subtracts the money registered and items counted as food sales. Cashiers are not authorized to operate the REFUND mode of the ECR.

Management maintains a log book for cashiers and supervisors to document VOID and REFUND actions. (A void log is used for ECRs without a refund capability.)

Cashier close out. At the end of each meal period, cash registers must be cleared using the following procedures: (1) The cashier will take the money tray out of the cash register and count all monies in the cash drawer. The supervisor will close out the cash register to get the information for the management reports. The cashier will enter all monies on the AF Form 1305, subtract the change fund, and total them. The cashier will compare the cash on hand with the audit tape provided by the supervisor. He or she will report any differences between cash on hand and the audit tape, *in writing*, to the dining facility manager.

Lost Meal Cards, DD Form 714. When told by the supervisor, cashiers will assist in the search for lost meal cards. Look for the lost meal cards by number and name by carefully checking each meal card as it is shown. If a lost meal card is presented, quickly notify the supervisor on duty.

A written record of attempts to recover the lost meal cards should be kept. In ALACS operations, the supervisor should check with the local service representative of the cash register to see if the registers can identify lost meal card numbers. This capability will make lost meal card searches easier.

Additional Instructions for Local Situations. Some additional cashier instructions for food service managers to consider are: (1) Procedures for transferring funds and making change. (2) Anti-robbery precautions. (3) What to do when a customer complains. (4) How to handle a customer who states he or she is on SIK but does not have a meal card, or is on BAS and does not have money to pay for a meal. Keep in mind that problems like these are normally the responsibility of commanders and first sergeants.

The cashier should not leave the cashier station during meal service, unless properly relieved. Do not require (or allow the contractor to require) the cashier to enforce dress codes, sell newspapers, make coffee, replace food items or tableware on serving line, or any other duty during meal service not related to the cashier functions.

Funds protection must be followed as described in AFR 125–37, *The Resources Protection Program*. After closeout of meal, money should be counted in a secure area, not in public areas.

Exercises (237):

1. What is the cashier responsible for safeguarding?

2. Under SCAMS what form is used by the cashier to list all cash and forms?

3. List the primary cashier duties.

4. What other duties are the cashiers responsible for during serving hours?

2-6. A La Carte System (ALACS)

Throughout the Air Force there is a big push to convert from the subsistence credit allowance management system (SCAMS) to the a la carte system (ALACS). ALACS is designed to charge basic allowance for subsistence (BAS) customers for each item selected instead of a basic price for the whole meal as in SCAMS. What advantages does ALACS provide? Let's consider the following.

ALACS gives BAS airmen a chance to buy only the items on the menu they prefer. It also allows them the chance to save money by buying the less expensive food items. The meal card personnel are not affected by the ALACS other than that it offers a wider selection of food items.

ALACS has a positive impact on many factors: recipe standardization; production controls such as progressive cookery, portion control, and decreased plate waste; and food merchandising. With all these factors taken into consideration, you can see that ALACS saves the Air Force

money, gives better control of meal costs and waste, and improves the overall food service program.

Since BAS customers must pay for each item they select, they are less likely to eat high-cost items. If they do eat the high-cost items, they will pay the exact amount it costs the dining hall to make it; thus, the dining hall loses no money. They are also less likely to take more than they can eat.

You and other food service personnel receive training and experience in the Air Force a la carte system, which prepares you for other assignments and promotions. It also prepares you for future employment and experience in civilian cafeteria operations. Keep this in mind as you read this section.

238. State what the RAMPS master recipe file is and how to use it.

The Master Recipe File. This is the primary component of RAMPS. This file contains ingredients and current costs of all standard recipes needed for item pricing. Each recipe contains a heading with all of the ingredients and costs for 100 portions. A surcharge of 10 percent is added to the basic cost per portion to cover condiments and frying-fat costs that are not recipe ingredients and food preparation losses (spillage, spoilage, burning, etc.). The total of the basic portion cost and surcharge is rounded to the nearest $.05 to get the item selling price. Upon request from a base that plans a conversion to ALACS, MAJCOM/DEH and data processing office will notify AFDSDC/PRE, Gunter AFS AL 36114–5000 in writing. They will arrange to send a complete current master recipe file. This request should be made at least 90 days before the implementation date. AFDSDC will release the master file and copies of the implementation plan directly to the base data automation office.

Required documentation, *Recipe and Menu Pricing System (RAMPS): F050/IE, Users Manual (UM)*, AFM 171–216, Volume 2, should be requisitioned through normal publications channels at least 3 months before implementation date. Documentation will accompany the release of the RAMPS to the data automation officer. Give the user's documentation to the FSO, who does the necessary coordination with the data processing installation (DPI) to establish local operating procedures and formulate food service requirements compatible with the DPI workload. When you get the master recipe file, you'll have to modify it to include local items and all current prices as necessary for your locale.

The master recipe file is approximately 600 pages long, with a recipe on each page. Besides the header data, preprinted information includes the stock number of each ingredient; what the item is; its as-purchased (AP) quantity for 100 servings (for example, the recipe may call for 4 pounds of lettuce but the AP quantity of 6 pounds of lettuce is used); the recipe price or actual cost of each unit of ingredient (that is, the cost per pound, gallon, or dozen, etc.); and the total cost of the recipe for 100 servings. The calculated selling price per portion is printed in three decimal figures. The RAMPS reference number for the master recipe file is UH166C110 and the file ID would be ATD11P (fig. 2-18). The portion price index has the RECIPE number, NAME, PORTION PER SERVING, and SELLING PRICE rounded to the nearest $0.05 for each recipe. The page numbers of the recipe calculation in the master recipe file and portion price list correspond.

Prepared 22 Dec 78 PORTION PRICE INDEX
STD110 DATED 78250 AS OF 79 Jan 01 PCN: UH166A110

RECIPE	NAME	PORTION PER SERVING	SELLING PRICE	PAGE
M039	Pineapple Cheese Salad	1/2 Cup	$.15	369
M040	Potato Salad	3/4 Cup	$.10	370
M042	Hot Potato Salad	3/4 Cup	$.10	371
M044	Spring Salad	1 1/2 Cups	$.15	372
M045	Three Bean Salad	1/3 Cup	$.05	373
N021	Taco	1 Ea	$.20	405
N022	Cannonball Sandwich	1 Sandwich	$.70	406
N023	Hot Pastrami Sandwich	1 Sandwich	$.30	407
N025	Monte Cristo Sandwich	1 Sandwich	$.40	408
N027	Barbecued Beef Sandwich Sloppy Joe	5 oz bbq 1 bu	$.50	409
N028	Italian Beef Pepper Sandwich	1 Sandwich	$.75	410
N029	Hamburger	1 Ea	$.35	411
N02901	Hamburger Deluxe	1 Ea	$.45	412
N02905	Cheeseburger	1 Ea	$.45	413
N02906	Cheeseburger Deluxe	1 Ea	$.55	414

Figure 2–18. Sample, Portion Price Index.

Exercises (238):

1. Which RAMPS document contains complete standard recipes with all the ingredients and costs for 100 portions?

2. Why is a ten percent surcharge added to the basic cost per portion for an item?

3. How many pages does the master recipe file consist of?

239. State what the item inventory listing is and how to use it.

Item Inventory Listing. This listing is a computer printout of every subsistence item in the storeoom (fig. 2-19). It contains columns with these headings: NATIONAL STOCK NUMBER, INGREDIENT, RECIPE PRICE, RECIPE UNIT, BALANCE, UNIT PRICE, and TOTAL $ VALUE.

The NATIONAL STOCK NUMBER column corresponds to the national stock number of each item found in Federal Stock Catalog 8900PL. The INGREDIENT column contains the name of each item. The RECIPE PRICE column contains the unit price of each item taken to 3 decimal places. The RECIPE UNIT column is the same as the unit issued, such as LB for pounds, CN for can, and PK for package. You fill out the BALANCE column as you take inventory to show a physical count of each item. The UNIT PRICE column is the recipe price rounded to two decimal places. You find the correct entry for the TOTAL VALUE column by multiplying the BALANCE by UNIT PRICE.

You use the item inventory listing to take the physical inventory at the end of the month. It replaces DD Form 160, Inventory of Class Quartermasters Supplies, used under the SCAMS System. After the physical inventory is complete, you add the TOTAL VALUE columns together to reflect the grand total of the subsistence on hand. You then sign it to verify accuracy of the inventory.

The item inventory is revised monthly to reflect price changes in FSC C8900 and local purchase listings. Local purchases pertain to items such as fresh milk, eggs, and breads that aren't available through the Federal stock system and must be purchased locally.

Exercises (239):

1. What is the item inventory listing?

PREPARED 79 JUL 02 ITEM INVENTORY LISTING AS OF 79 JUL 01 PCN UH166C120

NATIONAL STOCK NO.	INGREDIENT			RECIPE PRICE	RECIPE UNIT	BALANCE	UNIT PRICE	TOTAL $ VALUE
0000000000056	CHEESE AND CRACKERS		100 CS	$18.000	CS	-------	$.00	------
0000000000065	BACON BITS			$.650	BT	-------	$.65	------
0000000000097	NEDLDG BEVERAGE BASE		GAL	$5.130	GL	-------	$5.13	------
0000000000098	ASST JUICE			$.150	CN	-------	$.00	------
0000000000099	CHOC MILK HALF PINT			$.110	HP	-------	$.11	------
0000000000100	MILK HALF PINT			$.110	CT	-------	$.11	------
0000000000101	POTATO CHIPS			$.960	DZ	-------	$.00	------
0000000000102	DING DONG	10 PK		$1.000	PK	-------	$.00	------
0000000000103	TWINKIES	10 PK		$1.070	PK	-------	$.00	------
0000000000104	PEANUTS			$.120	EA	-------	$.00	------
0000000000105	HERSHEY BARS	36 PK		$4.680	PK	-------	$.00	------
0000000000106	COKE			$5.760	CS	-------	$5.76	------
0000000000107	ASST SOUP			$.190	CN	-------	$.00	------
0000000000110	CHEESE AND CRACKERS			$.100	EA	-------	$.00	------
0000000000114	ASST PUDDING	4 PK		$.630	PK	-------	$.00	------
0000000000116	VIENNA SAUSAGE			$.290	CN	-------	$.00	------
0000000000117	RAISINS			$.490	PK	-------	$.00	------
0000000000120	CHOCOLATE CHIPS LP			$.690	LB	-------	$.00	------
0000000000200	TORTILLAS CORN			$.300	PK	-------	$.30	------
8905000000003	HAM CURE 81			$1.710	LB	-------	$.00	------
8905000000300	CORNISH HEN			$1.340	EA	-------	$1.34	------
8905000441879	HOCKS FROZEN			$.950	LB	-------	$.95	------

PCN UH166C120 PAGE 2

40117

Figure 2–19. Sample, Item Inventory Listing.

2. What two columns of the item inventory listing are filled in when the inventory is taken?

3. What DD form used in SCAMS system does the item inventory listing replace?

4. Who must sign the item inventory listing after it is completed to verify its accuracy?

240. State the purpose of Portion Price Index and Recipe List and how it is used.

Portion Price Index and Recipe List. The portion price index is a listing of the recipe number, title, portion size and the selling price rounded to the nearest $.05 for each recipe computed in RAMPS. Also, it gives the page number of the recipe list. The recipe list is a printout of the recipe cost calculation, it shows exactly how the computer calculated the individual selling price for each item. These two items are used to identify the proper selling price for each menu item served in an a la carte facility (fig. 2-18).

Exercises (240):

1. State the purpose of the portion price index and the recipe list.

2. What does the portion price index and the recipe list consist of?

241. State the purpose of the RAMPS Basic Daily Food Allowance Computation.

Basic Daily Food Allowance Computation (BDFA). This is just as the name implies, a computer computation of the basic daily food allowance. This is the monetary value of food authorized to feed one enlisted person of one day. It replaces AF Form 200, Basic Daily Food Allowance Computation; however, it is a good idea to use the AF Form 200 to doublecheck the computer. The BDFA computation is contained in section R of the Master Recipe File. The BDFA computation contains the same components list on AF Form 200. It is used to ensure the a la carte facilities get properly reimbursed for their subsistence-in-kind patrons (fig. 2-20).

PREPARED 80 AUG 18 12:47 RAMPS BDFA COMPUTATION AS OF 80 AUG 15 PCN SF050-301

GUNTER AFS ALA

FOOD COST INDEX	NSN CONUS	NSN OVERSEAS	STANDARD CONTAINER	SUBSTITUTE CONTAINER	QUANTITY PER 100	PRICE PER LB, DOZ, GAL	VALUE OF COMPONENT
8915 - (NON-PERISHABLE)	8915-	8915-					
JUICE, PINEAPPLE, CANNED	00-634-2439	00-634-2439	NO. 3 CYL CN		1.875 LB	.195	$ .3656
JUICE, TOMATO, CANNED	00-255-9523	00-255-0523	NO. 3 CYL CN		3.75 LB	.242	$ .9057
PEACHES, SLICED, CANNED	00-577-4203	00-577-4203	NO. 10 CN		3.25 LB	.292	$ .9490
PEARS, HALVED, CANNED	00-616-0223	00-616-0223	NO. 10 CN		2.25 LB	.368	$ .8280
PEAS, GREEN, CANNED	00-127-9282	00-127-9282	NO. 10 CN		6.125 LB	.248	$1.5190
PINEAPPLE, SLICED, CANNED	00-170-5148	00-170-5148	NO. 10 CN		4.00 LB	.316	$1.2640
TOMATO, CANNED	00-582-4060	00-582-4060	NO. 10 CN		14.50 LB	.279	$4.0455
8920-	8920-	8920-					
CEREAL, CORNFLAKES, COATED	00-272-8939	00-272-8939	IND CT		2.00 LB	1.484	$2.9680
FLOUR, WHEAT, GEN. PURPOSE	00-140-7749	00-140-7749	50 LB BG		37.50 LB	.181	$6.7875
NOODLES, EGG	00-126-3388	00-126-3388	5 LB CT		3.00 LB	.580	$1.7400
RICE, PARBOILED	00-530-2185	00-530-2185	10 LB BG		3.00 LB	.320	$ .9600
SPAGHETTI	00-125-9441	00-125-9441	10 LB CT		3.00 LB	.380	$1.1400
8925-	8925-	8925-					
SUGAR, GRANULATED (CONUS)	01-059-5270		100 LB BG		31.25 LB	.252	$7.8750
SUGAR, GRANULATED (OVERSEAS)		01-059-4084	10 LB BG		31.25 LB	.000	$ .0000
8930-	8930-	8930-					
JAM, STRAWBERRY (CONUS)	00-197-1917		2 LB JR		1.875 LB	.645	$1.2094
JAM, STRAWBERRY (OVERSEAS)		00-599-8307	NO. 2 1/2 CN		1.875 LB	.000	$ .0000
JELLY, GRAPE (CONUS)	00-127-3079		2 LB JR		1.875 LB	.455	$ .8531
JELLY, GRAPE (OVERSEAS)		00-543-7607	NO. 2 1/2 CN		1.875 LB	.000	$ .0000

Figure 2–20. Basic Daily Food Allowance Computation.

Exercises (241):

1. What is the purpose of the BDFA computation?

2. Define the term BDFA.

3. What AF Form is replaced by the RAMPS BDFA computation?

242. State what AF Form 1212, ALACS Item Pricing, is and how to use it.

ALACS Item Pricing Form (AF Form 1212). The ALACS item pricing form is used to calculate manually any price change to a recipe. This form is used under the following four circumstances:

(1) New or changed recipes not in RAMPS, including changing the portion size.

(2) Limited use of special recipes not in the portion price index.

(3) When using forced-issue products in a recipe.

(4) Menu items sold at reduced prices.

The ALACS item pricing form is held in the dining hall and redone monthly to reflect price changes of recipe ingredients. The price changes are found in FSC 8900PL. When the item is finally in the RAMPS portion price index, the AF Form 1212 is sent to the food service staff office and kept on file 1 year. This form is prepared by the storeroom personnel and doublechecked by the dining hall supervisor.

To prepare the item pricing card (fig 2-21), you must first obtain the information for filling in the INGREDIENTS and QUAN/100 columns from AFM 146–12 or the recipe to be calculated. For the UNIT PRICE column, you must look up the unit price of each ingredient in FSC 8900PL. To figure out the COST column, you must multiply QUAN/100 column by UNIT PRICE. TOTAL FOOD COST/100 PORTIONS is the sum of the COST column. FOOD COST/PORTION is the TOTAL FOOD COST/100 PORTIONS divided by 100. ADDITIONAL COST is 10 percent of FOOD COST/PORTION—this covers the cost of fat for deep-fat fryers and the condiments placed on the table such as salt, pepper, catsup, etc. The SELLING PRICE/PORTION is the total of FOOD COST/PORTION plus the 10 percent ADDITIONAL COST. It is rounded off to the nearest $.05. If this card is prepared accurately, it will give you the correct selling price for any item you wish to serve.

RECIPE NAME: N-29-3 Cheesy BACON BURGER — PORTION: 1 BURGER

NSN	INGREDIENTS	QUAN/100	UNIT PRICE	COST	UNIT PRICE	COST	UNIT PRICE	COST
3192	Beef Patties W/Soy	20.000	1.500	30.000				
0993	Cheese American	5.000	1.500	7.500				
9592	Bacon	5.000	1.000	5.000				
5718	Hamburger Roll	10.000	.550	5.500				
TOTAL FOOD COST/100 PORTIONS				48.000				
FOOD COST/PORTION				.48				
ADDITIONAL COST 10 %	SUBTOTAL		1.048	.528				
SELLING PRICE/PORTION (Rounded)				.50				
DATE AND INITIALS				12-4-85	TS			

AF FORM APR 82 1212 PREVIOUS EDITION WILL BE USED. ALACS ITEM PRICING

Figure 2–21. Sample, AF Form 1212, ALACS Item Pricing.

Exercises (242):

1. For what is the ALACS item pricing card used?

2. The FOOD COST/PORTION on the AF Form 1212 is rounded to the nearest what?

3. How often is the ALACS item pricing form redone?

243. State what AF Form 1213, ALACS Price Reduction Record is, and how to use it.

AF Form 1213, ALACS Price Reduction Record. The sale of an item below the normal RAMPS selling price is authorized to keep the loss of subsistence (caused by the discarding of leftovers or forced issues) to a minimum. A reduced selling price should be the exception, since different prices for the same item may cause confusion among patrons. Do not reduce prices too often or without careful forethought. Reduced pricing may not be used to reduce an accumulated gain in the dining facility account.

The price of any leftover item may be reduced up to a maximum of 50 percent of the RAMPS price. The amount of the reduction is determined by the dining facility supervisor based on these circumstances: (1) the type, (2) quality, (3) quantity, (4) acceptability, and (5) the mix of SIK and BAS patrons. When the price is reduced, posting the menu price as a "Special" or "Sale" helps in merchandising the item.

Leftovers. Food production controls and progressive food preparation must be used to prevent excessive leftovers. Popular items such as roast beef, spaghetti, and desserts are not usually reduced in price because they have high acceptability even when they are leftovers. The price of a leftover item may be reduced if, in the opinion of the dining facility supervisor, the reduction is more cost effective. (For example, limited sales at the RAMPS price would result in discarding a significant quantity of the item.)

This procedure is a management tool to reduce losses caused by discarding leftovers. Excess cost is not authorized for the difference in the RAMPS and the reduced selling price.

Forced Issues. Forced issues of subsistence by the commissary prevent a loss to the Government.

Generally, the items issued are perishable or in danger of spoiling. They may be below acceptable quality and appearance standards. If the normal selling price for the forced issue subsistence item is considered excessive for the item to sell to cash customers, the dining facility supervisor may establish a lower price to encourage sales. This price reduction prevents additional loss to the Government by discarding unsold portions of the item. Excess cost for the forced issue is allowed only if it meets the requirements in AFR 146–7, paragraph 5–59. Reduced prices are not authorized for forced substitutions. Excess cost may be taken only when the requirements that are listed in the previous paragraph are met.

AF Form 1213, ALACS Price Reduction Record, is used to record any selling price used below the normal RAMPS selling price. AF Form 1213 is completed according to AFR 146–7. Figure 2-22 is an example of AF Form 1213.

Selling Price. AF Form 1213 is completed as follows: (1) Insert the DATE and MEAL for each price reduction entry in the left-hand columns. (2) Enter the ITEM name in column A. (3) Enter the normal RAMPS PRICE in column B. (4) Enter the REDUCED selling PRICE selected in column C. (5) Calculate the percentage that the reduced price represents of the RAMPS price. Enter this in column D. (6) The dining hall supervisor authorizing the price change signs his or her name in column E. (7) Enter number of portions sold—including cash and charge (SIK) sales—at the reduced price in column F. Get the number from the cash register report at the close of the meal period. (8) Use the REMARKS column (column G) for such data as whether the item was leftover or a forced issue and for any additional explanation.

At least once a month, the FSO must sign in the SIGNATURE blank (back of form) after reviewing all entries on completed forms to certify that price reductions were not used excessively or improperly. File AF Form 1213 with other food service records for the month.

Exercises (243):

1. When is the sale of an item authorized below the normal RAMPS selling price.?

2. What is the maximum amount that the price of a leftover can be reduced?

3. What is the purpose of AF Form 1213?

4. Who determines the amount of reduction for a food item?

244. Name the basic cash register functions and tell how to perform them.

Cash Register Functions. For you to use the cash register, you must know the basic functions of it. This lesson is based on the Data Terminal 400 cash registers. Not all ALACS bases use the 400, but most of the functions are basically the same as the other cash registers.

All registers come with a set of keys. These keys control different functions in the cash register, depending on what

ALACS PRICE REDUCTION RECORD

DATE 85	MEAL	ITEM A	RAMPS PRICE B	REDUCED PRICE C	% D	D.H.S. SIGNATURE E	PORTIONS SOLD F	REMARKS G
4 AUG 85	LUNCH	Grilled Liver	.40	.20	50	Walt Jones	10	Leftover - Discarded 2 part
8 AUG 85	Dinner	Beef Stew	.75	.50	33	Walt Jones	21	Leftover - All served
11 AUG 85	LUNCH	CHIPPER PERCH	.85	.45	47	[illegible]	96	Forced Issue

AF FORM APR 81 1213

Figure 2-22. Sample, AF Form 1213, ALACS Price Reduction Record. (front)

position you set the key in. The only key positions you need to be familiar with as an apprentice food service specialist are the A key and Z key positions. The A key position is used for all cashier functions such as ringing up the sales. The Z key position is used for all manager's functions. All cash registers come with special instructions on how to operate them. The function title may vary depending on the type of register.

The basic cash register functions are:

(1) Cashier's functions—ringing sales of SIK, (meal card), cash customers, and cross service.

(2) Manager's functions including date change, time change, changing prices, refund operations, reports, and changing ribbons and paper.

The only functions you will need to know are the cashier functions, along with reports, changing prices, and changing ribbons and paper under the manager's functions. These are functions you, an apprentice food service specialist, may have to use. Let's learn the cash register functions.

Cashier's functions, as indicated above, include ringing up all sales. There is a calculator type keyboard on all cash registers used in ALACS. This is used to ring up sales of food items programmed into the cash register. It is also used to ring in the meal card number of meal card (SIK) personnel and to program prices into the register. Each type of customer has a key on the register that is used to register their sales into the register's memory. There is a key for Army, Navy, Marine, Air National Guard/Reserves, meal card (SIK), cash customer, meal card seconds, and cash customer seconds. The cashier will ring up sales by using the following four steps:

(1) Press food item keys.
(2) Press subtotal key.
(3) Press total key.
(4) Press type of customer key.

If the customer is a SIK meal card customer, you continue as follows:

(1) Press meal card number on 10-digit keyboard.
(2) Press line feed key.
(3) Press (SIK) meal card key.

One of the main functions of the manager is to program prices of food items into the cash register (price changes). To do this, you must have the following columns of AF Form 662, Food Service Production Log, filled out: MENU ITEM, UNIT PRICE, and CASH REGISTER CODE. The information for filling out the PRICE and CODE columns is from the portion price index or the item pricing form. The information for filling out the MENU ITEM column is found in AFP 146–16, *Recapitulation of Menu Issues for United States Air Force Worldwide Menu for CY 1985 for 5 February to 31 December 1985*. You can now program the cash register by using the PRICE and CODE columns as a guide to tell you which keys to program the menu items into. The cash register instructions will tell you how to program these keys. The program instructions are laid out in step-by-step instructions. You should have no problem programming the register.

Exercises (244):

1. What are the two basic cash register functions?

2. Which cash register function provides instructions on ringing up sales?

3. What is the first step in ringing up sales?

245. State how to program an electronic cash register.

Programming Cash Registers. As stated earlier, there are a number of different cash registers used in ALACS. We will speak in general terms in our effort to cover similar areas on all the registers.

First let's talk about the general areas in which the registers can be programmed. The registers can have program changes in date, time, prices, and item description (name). These functions all fall under the manager's controls.

Changing date and time is usually not required. Most cash registers have time and date clocks programmed into them. The only time you may have to program time and date is when you have a power failure, when you first set up the register, when the number of days in a month fluctuates (February), or when switching back and forth from daylight savings time.

Price changes and item description changes are done before the start of the meal. The prices will be programmed into the register by referencing the prices on AF Form 662 and referring to the cash register operating instructions.

The only prices and descriptions changed daily or even from meal to meal will be main entrees. The cash register has at least 70 preset keys that should cover the different priced drinks, starches, vegetables, salads, etc.

The dining hall supervisor is responsible for all program changes in a register. The actual programming is usually delegated to the senior cook or shift leader. All programming procedures will be listed in the manufacturer's instructions. The programming functions are controlled by the management function key lock control. In other words, programming can only be done using the manager's register key. This key should only be used by the dining hall supervisor, shift leader, or senior cook. The cashiers should not have access to this key because it can be used to delete and change readings in the register. The manufacturer's instructions for your register will give step-by-step instructions on all programming.

Exercises (245):

1. In what areas can ALACS cash registers receive program changes?

2. Under what circumstances would you need to reprogram time and date?

3. When are price changes and description changes performed?

4. What reference materials are required to change prices?

5. What controls all programming functions?

6. The actual programming is usually delegated to whom?

2-7. Armed Force Consumer Level Subsistence Appraisal Committee

The Air Force is very concerned with serving its troups nutritious quality food items. The Air Force established a program which has been adopted by the Department of Defense to ensure that you receive quality food in military dining facilities. The new program is called the Armed Forces Consumer Level Subsistence Appraisal Program (AFCLSAP)

246. State what AFCLSAP is and what it does.

AFCLSAP. The Armed Forces Consumer Level Subsistence Appraisal Program (AFCLSAP) is a subsistence management program that is used to audit subsistence items at base level.

This program will provide a system to audit selected subsistence items in the Air Force inventory in the following four ways:

(1) Audits the quality and condition, food service adaptability, consumer acceptance, packaging and packing, and compliance with specification requirements.

(2) Provides feedback information from the consumer to management.

(3) Documents and reports unsatisfactory subsistence items.

(4) Serves as a management tool to obtain optimum food quality and maximum use of all subsistence, and reflects dollar savings.

Each quarter the Air Force Engineering and Services Center (AFESC) identifies which food items are to be audited based on:

- Complaints received from the field.
- Unsatisfactory material reports.
- Items that could cause problems or dissatisfaction at the time of use in the dining hall.
- Information requested by DOD agencies.
- High-dollar-value items.
- Items supplied under new or revised specifications.

This audit is actually conducted monthly on selected food items and then is submitted as a quarterly report.

Exercises (246):

1. What is the Armed Forces Consumer Level Subsistence Appraisal Program?

2. AFCLSAP provides feedback to management from whom?

3. How often does the Air Force Engineering and Services Center identify which item will be audited?

247. State how the COLEQUAP audit is prepared.

Performing the Audit. During each quarter, COLEQUAP questionnaires are sent by the Air Force Engineering and Service Center (AFESC) to the base food service officer. Included in this package is AF Form 2062, COLEQUAP Audit. This form is used as the answer sheet for the questionnaire.

Food Service Responsibility. The food service officer selects the dining facility in which the audit will be conducted if there is more than one facility on base.

Prior to the item check, the food service officer and the dining hall supervisor must read the questionnaire to find the right date and time for the evaluation to be conducted (when the item appears on the menu). After finding the right date and time to conduct the evaluation, they give the questionnaire to the cook who is responsible for the preparation and cooking of the item. The cook then evaluates the item and completes AF Form 2062.

Although the new acronymn is AFCLSAP in a DOD program, AF Form 2062 and AFR 74–10, *Consumer Level Quality Audit Program (COLEQUAP)* apply. The environment health office completes a separate portion of the program (using AF Form 2063, Individual COLEQUAP Report), involving primarily the technical aspects of the products and the specifications. The items audited are the same for both Environmental Health and Food Service.

When the audit reports have been completed by food service personnel and the environmental health service, they are then sent to the major command (MAJCOM), where they are checked to make sure they are completed properly. When the questionnaires are received from all participating bases, MAJCOM forwards them to AFESC. AFESC reviews and evaluates AF Form 2062 and AF Form

2063 for accuracy and completeness; they also compare and analyze computer printouts of the data for significant trends and take appropriate actions.

Exercises (247):

1. How often are COLEQUAP questionnaires sent to base food service officer?

2. Who selects the dining facilities in which to perform the COLEQUAP audit?

3. Who interprets the technical parts of food service specifications?

4. Where does the MAJCOM forward all completed COLEQUAP audits?

2-8. Fraud, Waste, and Abuse

Various audits performed by the Air Force have determined there is fraud, waste, and abuse in both subsistence (food) and cash controls in food service operations. You need not only avoid personal guilt in these areas but also guard against making it possible for others to become guilty of them.

248. Define fraud, waste, and abuse; state some problem areas in Food Service and ways to prevent them.

Before we talk about fraud, waste, and abuse, we must understand what they are. Fraud is the intentional misleading or deceitful conduct that deprives the Government of its resources or rights (in other words, covering up theft of Government property). Waste is the extravagant, careless, or needless expenditure of Government resources, resulting from improper or deficient practices, systems, controls, or decision (in other words, damage or destruction of Government property). Abuse is the intentional wrongful or improper use of Government resources. Examples are misuse of rank, position, authority, or Government property.

The Air Force regulation covering fraud, waste, and abuse is AFR 123–2, *Air Force Fraud, Waste, and Abuse (FW&A) Prevention and Detection*. Now that you know what fraud, waste, and abuse mean, let's discuss some problem areas in Food Service and ways to prevent these problems.

One of the problems in protecting monetary assets involves safeguarding and controlling accountable forms and money. These are worth money used or unused. To do this, you should store all controlled forms in a safe; use AF Form 1254, Register of Cash Collection Sheets, as prescribed by AFR 146–7; allow only authorized personnel to have the combination to the safe; use AF Form 1305, Receipt for Transfer of Cash and Vouchers, as prescribed to transfer all cash and forms; and make sure all entries on AF Form 79, 1339, and 463 are done in ink and closed out after use to prevent fraudulent signatures or erasing of signatures.

Another of the problems in protecting monetary assets involves proper control of head count and reimbursement to Government for meals served. To achieve this control, make sure that you charge correct prices for meals; tabulate seconds as such (to prevent improper head count); check ID cards of all personnel not in uniform; check all meal cards properly; check for lost or stolen meal cards; and ensure that contract, civil service, and military dining hall employees are paying for meals.

One of the problems in protecting subsistence involves access to storage facilities. The preventive measures are to restrict access of authorized personnel only and to lock or bar doors and windows of storage facilities.

Another problem in protecting subsistence involves ensuring proper count and control of food. To do so, make all entries on subsistence forms in ink. If you must make a correction on a form, line out the mistake, initial it, and make the proper correction. Verify the count of food on AF Form 287, Subsistence Request, and the physical count. Take physical inventories at least monthly and verify them with AF Form 147. Ensure that all entries on AF Form 147 agree with all received and issued items on AF Form 148, 287, and 129. Ensure that AF Form 662 menu items agree with items issued for that meal on AF Form 148. Ensure that the senior cook lines out unused lines on AF Form 148. Accurately annotate leftovers on AF Form 662 after each meal, and carry leftovers onto the next meal's AF Form 662.

Another problem in protecting subsistence involves proper storage to prevent deterioration. You should store food at the proper temperatures; rotate stock (put old food in front of new food); do not order more food than you can use before its expiration date; and refrigerate and date all leftovers immediately after the meal.

If you notice instances of fraud, waste, or abuse in your shop, you can do one or all of the following: correct the problem yourself; use the Air Force Suggestion Program; talk to your supervisor; talk to your commander; contact your unit FW&A officer; contact the AFOSI if you suspect fraud; call the Air Force Hotline (AUTOVON 227–1061); or use AF Form 635, USAF Fraud, Waste, and Abuse Disclosure.

Exercises (248):

1. What is intentional, deceitful conduct that deprives the Government of its resources?

2. What are the two areas of fraud, waste, and abuse in food service?

3. What does making all entries on subsistence forms in ink ensure?

4. What Air Force regulation covers the Fraud, Waste, and Abuse Program?

2-9. Functions of Contract Personnel

On many bases, the military no longer operate the food service facilities. The Government feels that it is less expensive to contract the operation to a civilian firm.

249. State the functions of contract personnel.

Contractors. When the food service operation is contracted to a civilian firm, the Government provides the building, equipment, and the food. The civilian contractor furnishes the manpower needed and manages the entire food service program. These civilian contractors must still follow Air Force regulations and the same rigid standards as the military-staffed dining halls. This is called a full food service contract.

On other installations, there may be a combination of military, contract, and civil service personnel. For example, the base may have the civilian contract employees performing the KP duties and have GS and military cooks working as a unit. As you can see, in these cases the food service contract is a partial one.

Civil service employees are employed directly by the Government. Contract personnel are employed by the contractor and are not entitled to Government benefits. Contract cooks do not necessarily have the same duties that military or civil service cooks have. Their duties depend entirely on the wording of the contract. You may be required to work along with them or monitor their work, but here you deal strictly with the supervisor and not the individual cook or mess attendant. If the individual violates the rules, you report it to the proper authorities and not to the individual concerned. Since contract services are civilian organizations that are not Government affiliated but are working on contracts for the Government, their policies are completely different. They can fire and hire at will and will only do what is in the contract and no more.

Exercises (249):

1. Define a full food service contract.

2. Who employs contract personnel?

3. What document determines the duty of contract cooks?

4. What is the Government required to furnish the contractor?

2-10. Quality Assurance Evaluation (QAE)

Every time a food service contract goes into effect, the military will need quality assurance evaluators to monitor the contract. You could end up being one.

250. State the duties, responsibilities, and conduct of a quality assurance evaluator (QAE).

Quality Assurance Evaluator's Duties and Responsibilities. The QAE is the eyes and ears of the contract officer and the food service officer. He or she is responsible for the following duties:

(1) Checks contractor performance using approved checklist.

(2) Prepares AF Form 801, Quality Assurance Evaluator Schedule.

(3) Coordinates on scheduling and contractor responses to sanitation inspections by the medical food inspectors.

(4) Evaluates and documents contractor performance.

(5) Notifies contracting officer and chief of services of any unsatisfactory performance by filling out AF Form 802, Contract Discrepancy Report.

(6) Submits all documentation concerning contract performance to the contracting officer each month.

(7) Accepts those services that have been performed satisfactorily by the contractor and certifies accuracy of contract invoices.

The QAE evaluates contractors on the basis of contract specifications and all applicable regulations. In the event the contract and regulations differ, the contract overrules the regulations. The QAE is responsible for quality assurance—that is, the QAE identifies the problems. The contractor is responsible for quality control—that is, the contractor actually does the job.

Standards of Conduct. As a member of the Air Force, and especially as one who deals extensively with contractors, all of your actions are subject to investigation and publicity. Because of the sensitivity of your position, the regulations governing your standards of conduct are very specific, very directive, and very strictly enforced. The main regulations covering this area are AFR 30–30, *Standards of Conduct*, and AFR 124–8, *Fraud Violations of Public Trust in Contract, Acquisition, and Other Matters*. AFR 30–30 and its ten attachments cover 49 pages. QAEs should get a copy of the regulation and carefully read it. AFR 30–30 applies to all Air Force personnel, military and civilian, and especially employees in both appropriated and nonappropriated fund areas. It also includes foreign nationals employed by the Air Force.

One subject in AFR 30–30 that applies to a QAE is that of conflicts of interest. Briefly, if a QAE or the QAE's dependents have a business, job, or other financial interest in which profitability is influenced by Air Force duties, those duties or those interests must go. If, for example, a contract monitor has an off-duty job as an employee of the contractor he or she monitors, an appearance of a conflict of interest is apparent. According to AFR 30-30, even though you technically have no conflict of interest, even the appearance of one is prohibited.

Exercises (250):

1. To whom does the QAE submit documentation concerning contractor performance?

2. What do we mean when we say that the QAE is responsible for quality assurance?

3. What AF publication covers reporting procedures for standard of conduct violations?

4. What is a conflict of interest?

Specialized Feeding Situations

UNUSUAL SITUATIONS will arise when it is physically impossible for some Air Force personnel to get to the dining hall on the main base during normal feeding hours. This could include men working on telephone lines, guarding airplanes on the flight line, manning remote missile sites, or flying. Because of these and similar situations, special feeding activities have been developed to meet these needs.

3-1. Ground Support Meals

As with every aspect of the Air Force, there is a specific authorization dealing with serving ground-support meals.

251. Specify the authorization for and the monetary allowance for ground-support meals.

Authorization. The authority to serve ground-support meals is as follows: To receive a ground-support meal, a person must meet two requirements: he or she must (1) be authorized to eat in an appropriated fund dining hall and (2) be unable to attend the dining hall during normal meal hours because of his or her job.

Monetary Allowance. The authorized monetary allowance for ground-support meals under SCAMS is either 20 or 40 percent of the BDFA, depending on the meal served. Under a la carte you may have 20, 30, or 40 percent of the BDFA depending on the types of food items contained in the ground-support meal.

For example, if the BDFA is $4, you would multiply $4 times 40 percent to arrive at the price of the meal; $4 x .40 = $1.60. So the selling price would be $1.60.

Exercises (251):

1. Amn Lois Blackwell wants to have a picnic lunch beside the flight line and watch the planes take-off and land. Is she authorized to pick-up a ground-support meal (box lunch)?

2. Sgt Richard Peters must have new telephone lines in building 869 by 1300 hours. He cannot leave his job until it is done. Can he receive a ground-support meal?

3. Lt Esteban Macanas wants to charge 43 percent of the BDFA for ground-support meals at 316 Bertha AFB and use the extra money for dining hall improvements. Is this authorized?

3-2. Flight Feeding Operations

In today's Air Force, crewmembers must sustain a high standard of performance. Each crewmember or passenger is exposed to extreme pressures, temperatures, sounds, vibrations, and unusual environments. To keep alert at all times during the exposure to these stresses, each individual must be physically and psychologically fit. Feeding of these people is an important factor in ensuring physical and mental health.

252. State the phases of flight feeding and the different types of flight meals.

Phases of Flight Feeding. Flight kitchens are authorized whenever there is a flying mission involved with the base. Flight meals are authorized for pilots, crewmembers, and passengers when the duration of the flight exceeds 3 hours. Flight meals may be prepared within the dining hall with pickup and delivery made from the dining hall. The flight kitchen itself is located as close as possible to the flight line to prevent unnecessary delays in transportation from the flight kitchen cooler to the refrigerator on board the aircraft. AFR 146–15, *Flight Feeding*, provides guidance and direction for the Air Force-wide flight feeding program. There are three phases of flight feeding—preflight, inflight, and postflight.

Pre-flight. Pre-flight feeding is an hour or two before takeoff. The crewmember should eat a freshly prepared and highly nutritious preflight meal to provide him or her with the energy necessary to maintain his or her efficiency until the next meal. The pre-flight meal should be eaten slowly in a pleasant atmosphere to encourage relaxation and good digestion. Foods that cause abdominal gas should be avoided. Such foods are cabbage, dried peas, turnips, and other fibrous vegetables, fruits, beer, and carbonated drinks. Also avoid foods that are poorly cooked, highly spiced, and those that contain a large amount of fat.

In-flight. The in-flight feeding concepts evolved from crewmembers having to fly longer missions. Factors influencing the extent and success of food service in an

aircraft are numerous. In-flight meals are often a nutritional compromise because of limited aircraft space, food service equipment, and the peculiar demands of the individual flight situation.

Postflight. Postflight feeding is after a long flight. Crewmembers need to relax and refresh themselves to relieve the tensions brought about by hours of concentration or fatiguing flight pressures. Having a snack or meal helps to do this. This also prevents chronic fatigue. Postflight feeding stimulates both the physical processes and morale of crewmembers.

Types of Flight Meals. The following meals are the different types that are authorized for flight feeding.

Sandwich meal. Of the several types of flight meals authorized, the sandwich meal is the most useful for several reasons. It can be used as a breakfast, lunch, or dinner meal. It can be planned from a wide variety of foods authorized in the Federal Supply Catalog C–8900–SL. The sandwich meal requires no installation aircraft equipment except a hot cup for warming soups.

Meals cooked frozen (MCF). The pre-cooked frozen meal is designed to provide a highly acceptable hot meal to crewmembers and passengers on administrative or operational flights aboard transport-type aircraft. This meal consists of commercially prepared main course food items for breakfast, lunch, and dinner.

Bulk items for preparation aloft. Meals prepared from bulk issue may be used for feeding air evacuation patients and may be served on passenger and administrative flights. They are prepared aboard aircraft equipped with galleys.

Bite-size meal. The bite-size meal is designed to provide subsistence to crewmembers aboard jet aircraft when the serving of any other type of flight meal is not practical. These crewmembers wear oxygen masks and can remove them only for short intervals. What they eat must be eaten quickly.

Frozen foil-pack meal (FFPM). The frozen foil-pack meal is designed to provide a hot meal for crewmembers on long flights aboard the aircraft. These meals are fresh. Meal components are prepared, partially cooked, and packaged by the flight kitchen. They are also used in missile crew feeding.

Meal, flight feeding (MFF). This meal was originally adoped for aircrew feeding only. This is actually a variation of the Meal, Ready to Eat (MRE). However, there are some differences between MFF and MRE. The MFF eliminates food components that the Surgeon General did not approve for use in preflight and flight feeding for aircrews. Examples are beans and tomatoes contained in three of the 12 MRE menus. Also eliminated are dehydrated entrees and potato patties from the MFF. MFF's will be fully implemented in CY 1987.

Meal, ready to eat (MRE). This meal was developed as a combat meal and was adopted to flight meals. It is a prepackaged, semidehydrated meal consisting of 12 menus. It is packaged in thick plastic bags. This eliminates the weight of the old combat-meal cans.

Exercises (252):

1. Flight meals are authorized when a flight exceeds what period of time?

2. What are the three phases of flight feeding?

3. Which meal was designed to provide a highly acceptable hot meal to passengers on administrative flights?

4. Which meal is used in missile-site feeding as well as for crewmembers on long flights?

253. State the proper preparation procedures for flight meals.

Meal Preparation. Each type of flight meal is prepared differently. The following are preparation procedures.

The sandwich meal preparation procedures are explained in Section 3-1, Ground-Support Meals, and need not be repeated here.

Meals cooked frozen, are commercially prepared dinners. We call them TV dinners. They can only be eaten on aircraft equipped with B–4 or other type ovens. Follow the manufacturer's instructions for cooking time and temperature of the MCF. They should be supplemented with fruit and beverages.

Bulk items for preparation aloft are prepared aboard the aircraft. The food is fresh, frozen, and canned items drawn from the commissary. They are prepared on aircraft with kitchens built into them and are prepared in the same way that food is prepared in the dining facility.

Bite-sized meals are prepared in the flight kitchens. They are bite-sized pieces of meat about 1 inch square. The meats should be low fat and high protein in content. They should be wrapped in aluminum foil and heated in a 350°F oven for 5 minutes. Time and date the package and refrigerate immediately. They have the same shelf life as the sandwich meal and must be eaten within 5 hours after issue if they are not under refrigeration.

The frozen foil-pack meal preparation will be discussed with Missile Feeding, Section 3–3 of this chapter. However, aboard an aircraft they should be heated for 30 minutes in a B–4 oven before consumption.

Exercises (253):

Identify the following statements as true or false, provide correct answer.

____ 1. The meal cooked frozen, is a commercially prepared TV dinner.

____ 2. Bite-size meals are prepared aboard the aircraft.

____ 3. You should heat sandwich meals at 350°F for 5 minutes.

254. Identify the different types of flight kitchens and equipment and how to maintain the equipment.

In-flight Service Equipment. Equipment necessary to provide food is authorized to the flight kitchen. Flight feeding equipment is authorized in accordance with the three most common facilities, which are: *Type A*, those serving less than 500 meals a month; *Type B*, those serving between 500 to 1500 meals a month; and *Type C*, those serving in excess of 1500 meals a month.

Four types of equipment used for inflight service are:

(1) Oven food warming, type B–4 (fig. 3-1). These are used to heat up FFPM and MCF meals.

(2) Frozen food holding box (fig. 3-2). This is used to transport FFPM and MCF meals.

(3) Container, metal, vacuum, 2-gallon capacity, electrically heated or dry-ice cooled type J-1 (figs. 3-3 and 3-4). Used to transport hot or cold beverages.

(4) Bracket and receptacle, four-unit hot cup (fig. 3-5). Used to heat up soups or other hot liquid foods aboard the aircraft.

All of this equipment should be washed in hot soapy water 120 to 130°F, rinsed in hot water of 140–150°F, and sanitized by soaking in water of 170°F for at least 30 seconds or by soaking for at least 1 minute in a solution of water and either 50 ppm (parts per million) of chlorine or 12.5 ppm of iodine. The solution temperature should be 75–120°F.

Exercises (254):

1. Match each definition in column B with its appropriate term in column A.

Column A	*Column B*
____ (1) Type A, Facility.	a. Serves 500 to 1,500 meals a month.
____ (2) Type B, Facility.	b. Used to heat up FFPM and MCF meals.
____ (3) Type C, Facility.	c. Serves less than 500 meals a month.
____ (4) B–4 oven.	d. Serves 1,500 or more meals a month.
____ (5) Four-unit hot cup.	e. Used to heat up soups aboard the aircraft.

3-3. Missile Feeding

Missile feeding has nothing to do with feeding missiles. It is feeding personnel working on missile sites. All the missile sites are under the Strategic Air Command (SAC) at the present time. In the following material, we will explain everything from the preparation of the FFPM to accounting forms.

255. Identify the responsibilities of Food Service in missile feeding.

Food Service Responsibilities. A successful feeding program requires the maximum effort of all responsible personnel. The duties and responsibilities of the food service is to ensure, first, that the food service activity assumes responsibility for all site feeding requirements. Then, Food Service must establish effective procedures and controls to requisition, store, distribute, dispose of, and account for frozen foil-pack meal components and other subsistence necessary for site feeding.

Food Service must maintain close coordination with the central preparation facility regarding requirements and delivery cycle. A feedback of customer acceptability will be provided the CPF with recommended improvements in the FFPM program. Of course, Food Service must make sure that competent personnel are assigned to the missile-site feeding program and this entails training of personnel in all phases to ensure continuity of experienced service.

Food Service must inspect the central distribution section (CDS) and launch control facility kitchens (LCFK) weekly to ensure that appropriate housekeeping procedures are followed, food service equipment is properly used, and that the food service program is conducted with existing food items issued from the CDS.

Food Service must maintain a rotation of personnel between base and missile food service facilities. This is accomplished to assure maximum training in every aspect of the food service program for each individual. Food Service sees that its personnel are relieved from site duty on schedule. If necessary, this will be accomplished at the expense of assigned base food service personnel.

Exercises (255):

1. What must Food Service coordinate closely with the central preparation facility?

2. What does a rotation of food service personnel between the base and missile sites assure?

3. How often does Food Service conduct inspections of the central distribution section and the launch control facility kitchen?

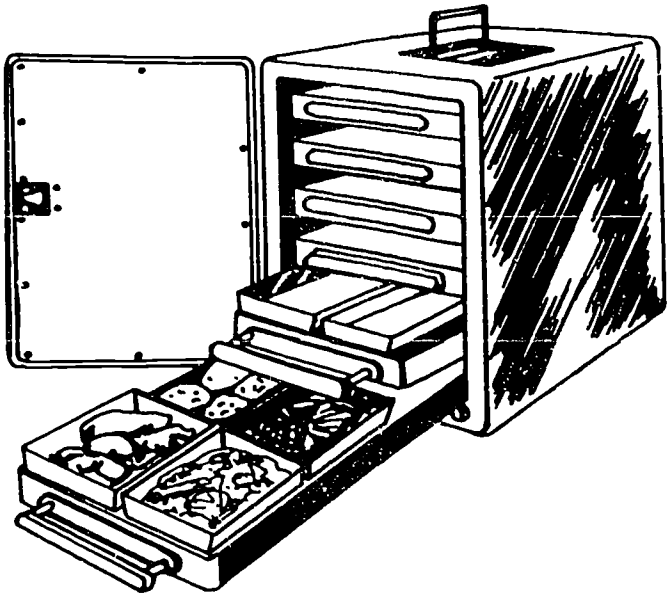

Figure 3–1. Oven, food warming type B–4.

256. Identify the food service activities involved in the frozen foil-pack meal program and indicate how they prepare and distribute the FFPM.

The Frozen Foil-Pack Meal Program (FFPM). The following are the facilities involved in the frozen foil-pack meal program and what they do.

The primary objective of missile-site feeding is to provide acceptable, nutritious meals. To accomplish this objective and to assure quality preparation and service, the Air Force uses the frozen foil-pack meal that is prepared and frozen in the central preparation facility (CPF). After the meals are prepared and blast frozen, they are then shipped by refrigerated trucks to a central distribution section (CDS). From there the frozen foil-pack meals (FFPMs) are distributed to the manned missile site (called the launch control facility kitchen (LCFK)). Each LCFK requests the amount and type of meals from CDS based on their feeding requirements. The following is a list of terms used in missile feeding.

Manned sites. Those missile sites equipped for small quantity food preparation and to which food service personnel are assigned.

Frozen foil-pack meal (FFPM). Food items (excluding salads, beverages, and some breakfast items) prepared, individually packed, frozen, and stored for future selection and consumption by authorized personnel.

Central preparation facility (CPF). An activity that prepares, freezes, and distributes individual frozen foil-pack meal components to designated using organizations. CPF, located at F.E. Warren AFB, Wyoming, prepares all the FFPMs for all of SAC.

Central distribution section (CDS). An activity on each base that is designated to receive FFPM components from the CPF and distribute them to the LCFKs.

Launch-control facility kitchen (LCFK). Located on the manned missile sites, these kitchens are used to heat the FFPMs and to prepare and serve other fresh and cooked food.

At the central preparing facility, all food is carefully inspected. A sample unit portion of each prepared food item is taken to be used for inspection while looking for communicable diseases and food poisons. Sample size is determined on the total lot size (number of sample units) of a given food item prepared at one time (not to exceed an 8-hour period). Whenever retesting of a sample lot is required for final bacteriological evaluation, the inspection level must meet environmental health standards.

All materials must be of edible grade, clean, sound, wholesome, free from evidence of insect infestation or other objectionable foreign matter, odors, and flavors. They must be in excellent condition at time of use. Food items are prepared in accordance with AFM 146–12. When applicable, rice flour may be substituted for hard wheat flour and approved stabilizers of vegetables and animal origin may be used to improve the texture and flavor of products.

Consideration of product quality must include such characteristics as appearance, color, moisture, tenderness, texture, consistency, greasiness, flakiness, fluffiness, and smoothness, as well as pleasing aroma and taste.

After preparation, stamp the product date (day, month, and year) on the primary container to identify the lot. CPF will accomplish normal filling and container sealing operation within a time frame of 20 minutes. Food temperatures throughout the container filling and sealing operation must be above 140°F or below 45°F. Food subjected to environmental temperature below 140°F and

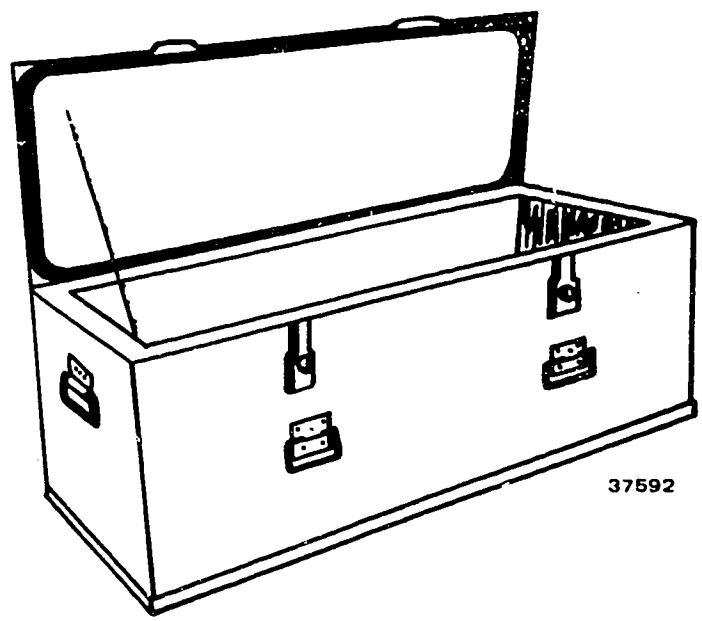

Figure 3–2. Frozen food holding box.

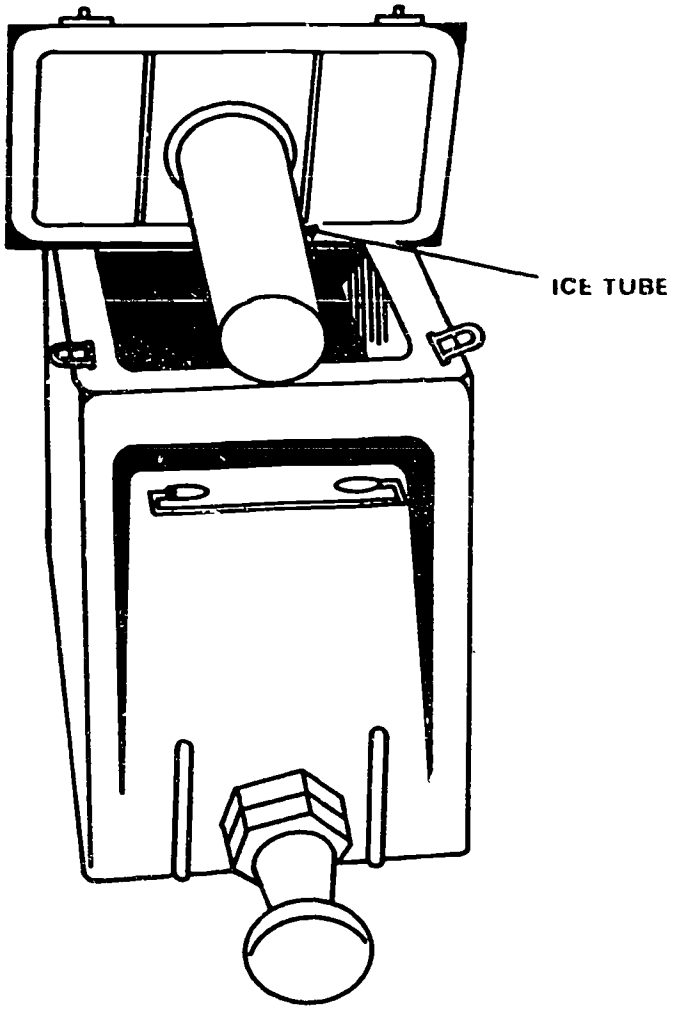

Figure 3–3. Metal vacuum container.

above 45°F must immediately be placed in shallow storage pans not to exceed a depth of 2 inches and then placed in a refrigerated environment of 40°F or below. The above time cycle has been established to inhibit the growth of bacteria. Foods prepared within these perimeters should contain less than 300 bacteria per gram. After preparation, the FFPMs are flash-frozen.

The normal shelf life is 4 to 6 months for products prepared and packaged in accordance with the standards in AFR 146–7 and held at refrigerated temperatures of 0°F or below. Extension of shelf life of a product beyond 6 months can be on an individual lot basis only and must be approved by command headquarters. The quality of frozen foods packaged in accordance with the above procedures begins moderate deterioration after 6 months.

Exercises (256):

1. Match each definition in column B with its appropriate term in column A.

Column A	*Column B*
____ (1) Kitchens that receive FFPMs from CPF and issue them to LCFKs.	a. Manned site.
____ (2) Missile sites equipped for small quantity food preparation with assigned food service personnel.	b. CPF.
____ (3) A portion of each food item used for food inspections.	c. LCFK.
____ (4) Activity that prepares and freezes FFPM.	d. Sample unit.
____ (5) Kitchens located on the manned missile sites.	e. CDS.

257. Identify the forms involved in missile feeding and their purposes.

Missile Site Accounting. Since SAC handles all missile feeding, most of the forms used are SAC forms; however, some are Air Force forms. We will discuss both the SAC forms and Air Force forms used at the missile sites.

AF Form 287, Subsistence Request form, is used to distribute FFPMs from the CPF at F.E. Warren AFB to

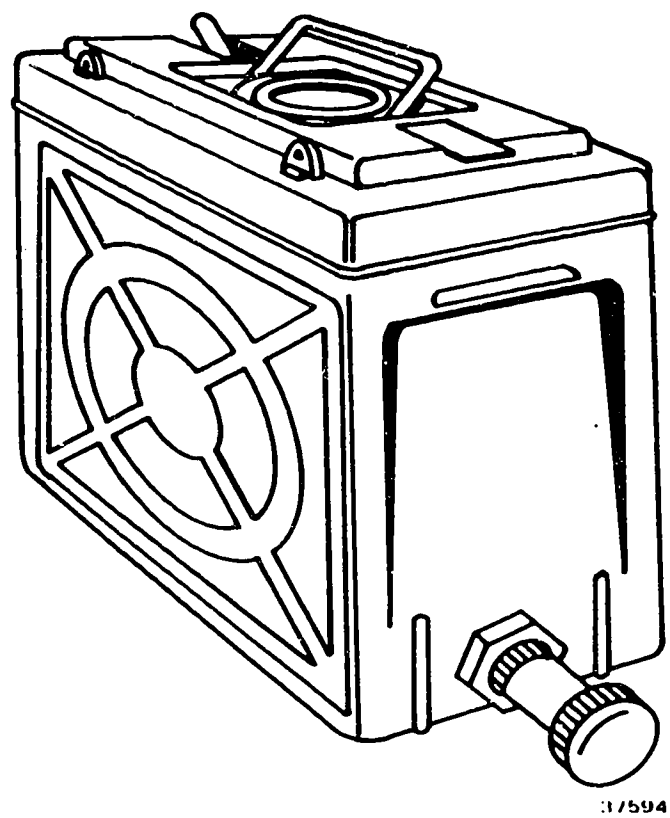

Figure 3–4. Beverage dispenser.

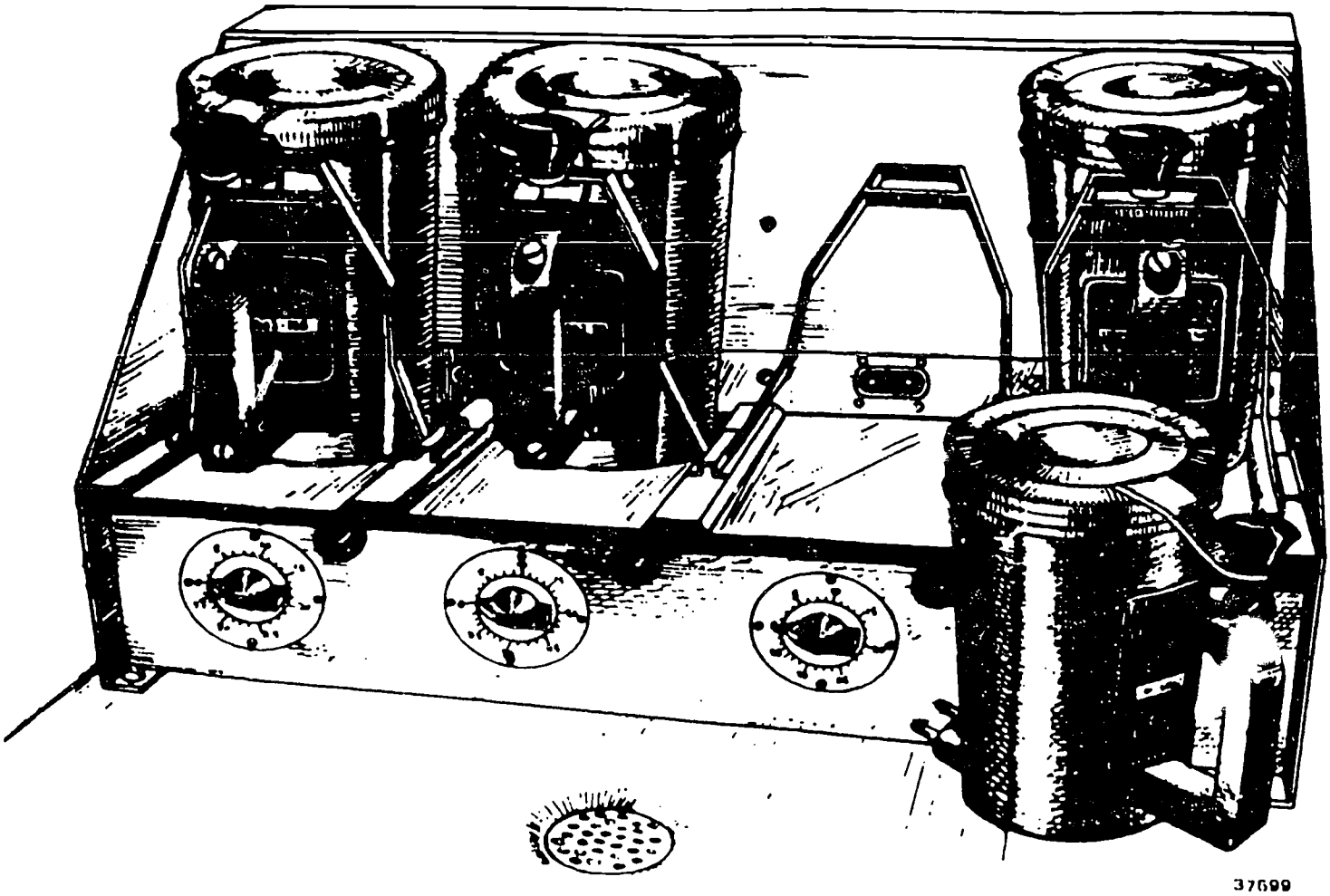

Figure 3–5. Hot cup.

missile bases. The missile bases must submit the AF Form 287, 21 days prior to delivery. Delivery of FFPMs will be done every 60 days.

Once the CDS of the missile bases receives the FFPMs on AF Form 287, these amounts are annotated on AF Form 147, Dining Hall Stock Record.

The LCFKs are issued the FFPM on AF Form 129, Tally In—Out, from CDS (fig. 3-6).

SAC Forms 420 and 420a (figs. 3-7 and 3-8) are used to control all food items at the LCFK. These are used in place of AF Forms 147. When an identical item is on hand at a different price, make a separate entry for each. Columns F, G, and H of Form 420 and 420a will be annotated daily to show each day's meal consumption. These forms will be turned in to CDS at the end of each cook's shift, and the balances will be carried over from one shift to the next. The title of SAC Form 420 is Launch-Control Facility Kitchen (Shift) Stock Control Record.

AF Form 812, ALACS Meal Order Record, is used to keep a record of food items eaten by each individual at each meal (fig. 3-9). You use this the same way you use it a Form 148 in the dining hall. You use it to subtract items from SAC Forms 420 and 420a. The patrons will sign AF Forms 79 or 1339 to account for meals sold and cash received. AF Forms 1339 and 79 can be used for more than one meal in small facilities such as missile sites.

Exercises (257):

1. What is the AF Form that is used to distribute FFPMs from CPF at F.E. Warren AFB to the central distribution section of missile bases?

2. What do SAC Forms 420 and 420a control?

3. What Air Force forms are used to account for cash and meals sold in a missile site?

TALLY ☐ IN ☒ OUT

SHEET 1 OF 1

REQUISITION OR PO NUMBER

TALLY NUMBER: Oct 15-1

DATE: 15 Oct. 79

STATION: BLANK AFB

CARRIER:

CONSIGNOR: FLIGHT KITCHEN

B/L NUMBER:

CONSIGNEE: FLEET SERVICE

CAR NUMBER AND INITIALS:

AUTHORITY:

SEAL NUMBERS:

CONTAINERS OR PIECES	UNITS PER CONTAINER	CONTENTS	UNIT	TOTAL UNITS	UNIT SALES PRICE	TOTAL VALUE
1	12	MFCF, Fr. Fried Shrimp	ME	12	2.00	24.00
1	10	MFCF, Beef Burgundy	ME	10	1.70	17.00
				Total		41.00

PACKER (Tally out use)

CHECKER

I CERTIFY THAT THE ABOVE LISTED ARTICLES *(Subject to Veterinary Inspection)* WERE INSPECTED BY ME AND THAT THEY CONFORM TO THE CONTRACT REQUIREMENTS.

RECEIVED THE ABOVE LISTED ARTICLES IN APPARENT GOOD ORDER AND CONDITION *(Except as noted)*

SIGNATURE

INSPECTOR'S SIGNATURE

GRADE OR TITLE

DATE

AF FORM JUL 76 129 PREVIOUS EDITION WILL BE USED. 37562

Figure 3–6. Sample, AF Form 129.

LAUNCH CONTROL FACILITY KITCHEN (SHIFT) STOCK CONTROL RECORD (CONTINUATION)

DATE(S)

ITEM A	UNIT B	BALANCE FORWARD C	AMOUNT RECEIVED D	AMOUNT TURNED IN E	SUBSISTENCE USED DAY 1 F	DAY 2 G	DAY 3 H	TOTAL AMOUNT USED I	END INV J	UNIT COST K	TOTAL COST L
OATMEAL	BX										
PANCAKE MIX	BX										
WORCUESTERSHIRE SAUCE	BTL										
CHEESE	LB										
WAFFLES	BX										
VINEGAR	BTL										
PEANUT BUTTER	JR										
BAKING SODA	BX										
BEEF PATTIES	LB										
FRANKS	LB										
HAMBURGER BUNS	PKG										
HOT DOG BUNS	PKG										
RELISH, PICKLE	PKG										
ITALIAN DRESSING	PKG										
TARTER SAUCE	PKG										
GREEN OLIVES	CN										
POTATO, INSTANT	CN										
DONUTS	PKG										
PARMESAN CHEESE	EA										
LEMON SQUEEZE	BTL										
LETTUCE	LB										
CARROTS	LB										

SAC FORM APR 72 420a REVISED

Figure 3-7. Sample, SAC Form 420a. front

ITEM A	UNIT B	BALANCE FORWARD C	AMOUNT RECEIVED D	AMOUNT TURNED IN E	SUBSISTENCE USED DAY 1 F	DAY 2 G	DAY 3 H	TOTAL AMOUNT USED I	END INV J	UNIT COST K	TOTAL COST L
Vinegar	BT										
Peanut Butter	JR										
Baking Soda	BX										
Beef Patties	LB										
Franks	LB										
Hamburger Buns	PG										
Hot Dog Buns	PG										
Pickle Relish	BX										
Instant Potatoes	BG										
Butter Patties	LB										
Donuts	PG										
Parmesan Cheese	CO										
Lemon Squeeze	CO										
Tarter Sauce	PG										
Lettuce	HD										
Carrots	LB										
Tomatoes	LB										
Green Peppers	LB										
Cucumbers	LB										
Onions	LB										
Coffee Creamer	PG										
Grilled Steak	LB										
										TOTAL	

Figure 3-8. Sample, of SAC Form 420a. back

ALACS MEAL ORDER RECORD			1. ☐ BAS ☐ SIK		2. ☐ BREAKFAST ☐ DINNER ☐ BRUNCH ☐ LUNCH ☐ NIGHT ☑ SUPPER					3. DAY/DATE 4 SEPT 81			
4. GRADE A	NAME B	MEAL CARD NUMBER C	MEAT D	SOUP E	POTATO F	VEGE-TABLE G	SALAD H	DESSERT I	BREAD J	DRINK K	OTHER L	MENU NO. M	TOTAL PRICE N
AIC	JACK JONES	624889	ROAST BEEF	VEG	MASHED	PEAS	TOSSED	W. CAKE	WHEAT	MILK			
	PRICE		1.00	.10	.10	.05	.20	.15	.05	.10			1.75
LT	TOM SMITH	N/A	BAKED HAM	VEG.	BAKED	G BEANS	TOMATO	APPLE PIE	WHITE	COKE	S/C		
	PRICE	N/A	.60	.10	.10	.05	.15	.15	.05	10	.40		1.70
	PRICE												
	PRICE												
	PRICE												
	PRICE												
	PRICE												
	PRICE												
	PRICE												

AF FORM APR 81 812

16883

Figure 3-9. Sample, AF Form 812.

3-4. Readiness

Readiness deals with our capacity to go to war at a moment's notice. In order for Food Service to function in a wartime situation, we must know what is expected of us. The field feeding situations also involve special equipment.

258. State the goals and responsibilities of the Prime RIBS Program.

Prime Readiness In Base Services (RIBS) Program Goals and Responsibilities. What is a Prime RIBS program? It is a program that organizes and trains services for world wide combat support. The goals of Prime RIBS are listed in AFR 140–3, *Air Force Prime Readiness in Base Services (RIBS) Program*. The following is a synopsis of the eight goals.

(1) Organizing, training, and equipping services forces to support the Air Force mission during wartime, natural disasters, major accidents, and other contingencies.

(2) Developing and maintaining highly skilled mobile services military forces capable of rapid response to worldwide contingencies.

(3) Developing and maintaining highly skilled in-place services military forces in support of CONUS and theater Air Force forces directly tasked in operations plans.

(4) Providing supplementary home-station and formal training to services personnel to ensure they are capable of performing their combat-support tasks under contingency operating conditions.

(5) Developing and maintaining ANG and USAFR services forces to complement and supplement services active duty forces.

(6) Maintaining highly skilled in-place military services to support forces in the United States and in oversea bases.

(7) Provide additional training to ensure that personnel are capable of performing direct combat support tasks.

(8) Maintain Air National Guard and Reserve forces to help active duty forces.

The Prime RIBS teams are responsible for all food service, billeting, mortuary affairs, and laundry services during wartime. You may have to do any number of these duties on a RIBS team, but your main function is to feed personnel. There are three types of RIBS teams, each designed to support a certain base population. No matter what team you are on, you will be required to provide adequate and nutritious food and beverages to support your base.

As a team member, you may be required to be shipped out at a moment's notice. You must keep a mobility bag packed at all times. A list of items required in a mobility bag may be found in AFR 67–57, *Uniform Clothing Allowances for Air Force Enlisted Members*. Be ready.

Exercises (258):

1. What program organizes and trains services for worldwide combat support?
2. What four categories of services are Prime RIBS teams responsible for during time of war?
3. What AFR covers Prime RIBS goals?
4. What does the acronym RIBS stand for?

259. Identify the different types of field feeding equipment and how to operate them.

Field Equipment. To function in the field, you must know and understand the equipment involved. In the following paragraphs, we will discuss some of the equipment you will be exposed to in a RIBS team.

Harvest Bare. These are semipermanent structures, transportable in a C–130, C–141, or C–5 aircraft. The Harvest Bare package is equipped with air-conditioned dining rooms and kitchens. They have hard floors and are completely equipped with conventional dining hall equipment. Most of the equipment is steam operated. Either A-, B-, or T-rations can be prepared in them. (These rations will be explained in the next objective.) The equipment can be maintained only by trained repairmen. Each Harvest Bare package contains 9 kitchens and can feed 4,500 people.

Harvest Eagle. This is a tent city. Each kit contains 4 kitchens and can feed up to 1,100 people. It is lighter, more compact, and easier to erect than the Harvest Bare. There are two types of Harvest Eagle: (1) the old Eagle has the M59 Field Range, M–2, and immersion heaters for cooking and cleaning. (These will be discussed in greater detail later.) The new Eagle is based on the M–2 burner, but it has conventional equipment—such as grills, steam lines, ovens, and sinks that are heated by M–2 burner units that receive fuel from a main fule. The Harvest Eagle is designed for preparation of A-, B-, or T-rations.

MKT–82 Mobile Kitchen (fig. 3-10). The MKT–82 is a Mini-Harvest Eagle mounted on a 10- by 8-foot trailer. It can be pulled by a 2½-ton truck and can feed up to 250 people. It is very similar to a pop-up camper. It has no refrigeration or dining facilities. It is designed to prepare T-rations, which are canned, prepared foods, and B-rations, which are dehydrated foods. It uses M–2 burners and M–59 field ranges. It can also be transported by air.

The M–1948 Kitchen Tent. The M–1948 is a screened kitchen tent with a stack section in the back for cooking. The stack end is higher than the rest of the tent and has openings for ventilating out the gas fumes. It is awkward to set-up and is slowly being phased out. It is, however, still in use.

M–2 Burner Unit (fig. 3–11). The M–2 is a single burner gasoline unit (fig. 3-11). The gas tank is U-shaped. It can be used with the M–59 field range or independently. Since it is gas operated, it must be operated in a ventilated area.

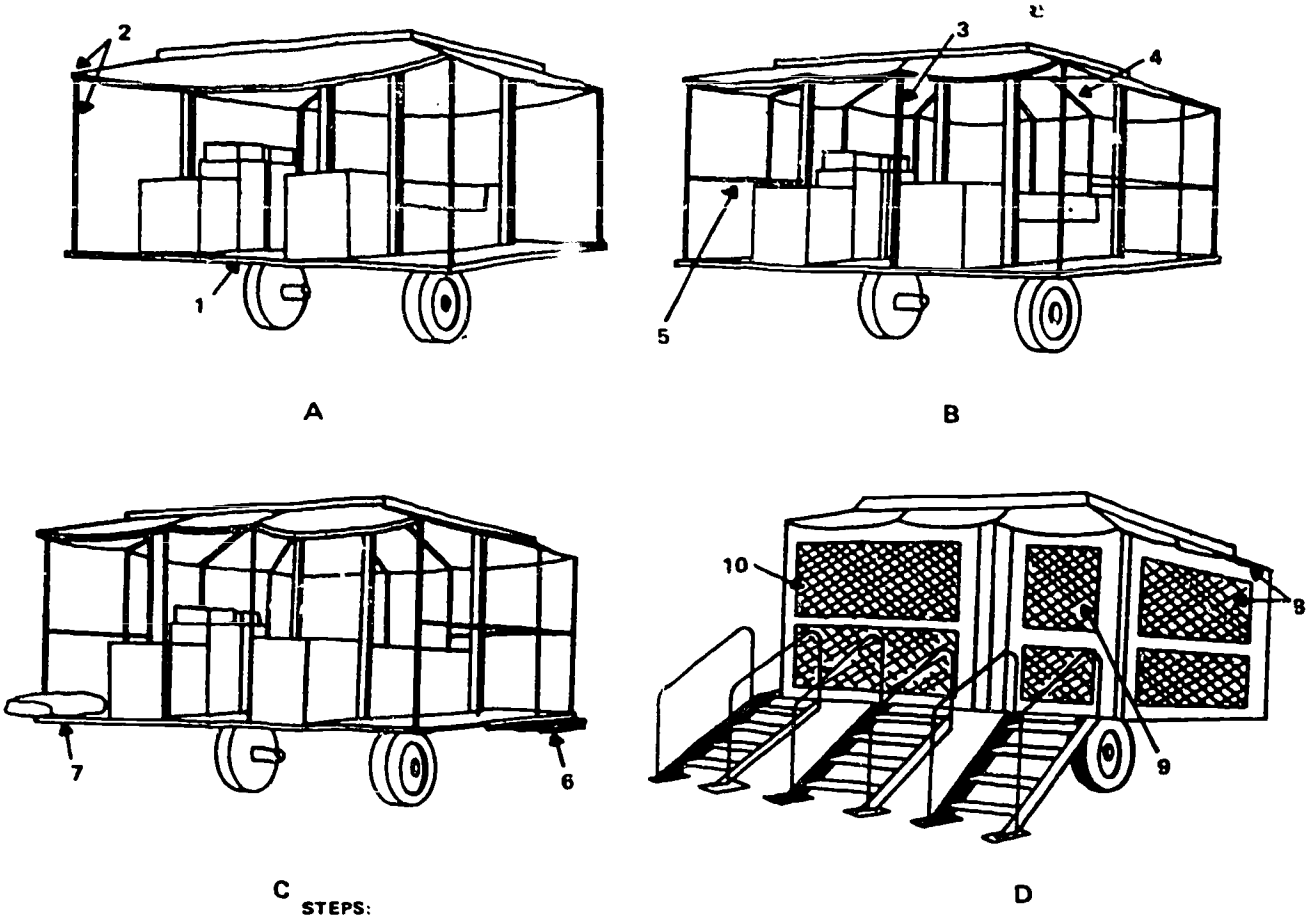

STEPS:

1. REMOVE 12 TENT POLES AND HAND RAILS FROM STOWAGE.
2. INSTALL CORNER TENT POLES.
3. INSTALL REMAINING POLES.
4. ADJUST TENSION ON SMALL ARMS.
5. INSERT HAND RAILS INTO SOCKETS.
6. USE HOLDOUT STRUTS DURING FOUL WEATHER CONFIGURATION.
7. STORE ON DUNNAGE BOARD DURING FOUL WEATHER.
8. INSTALL LONGEST CURTAINS ON SIDES AND ATTACH TO INSIDE OF ROOF FABRIC FLAG WITH VELCRO TIE.
9. INSTALL THE TWO SMALLEST CURTAINS AT BOTH ENDS ON RIGHT SIDES OF ROOF FABRIC FLAGS.
10. INSTALL REMAINING CURTAINS.

37598

Figure 3–10. MKT-82, mobile kitchen tent.

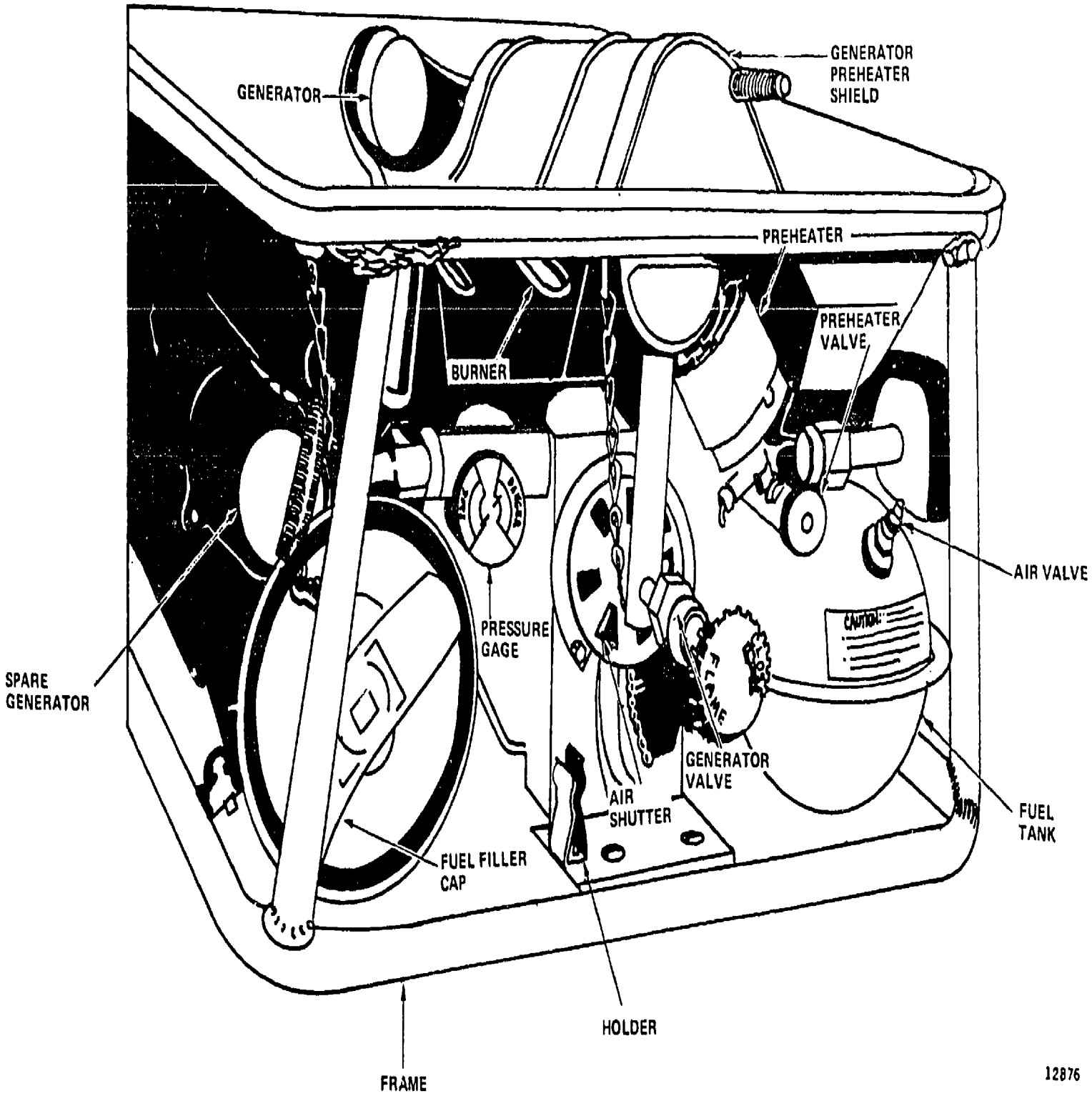

Figure 3-11. M-2 burner unit.

First you fill the tank. Then you use a hand pump or a bicycle pump to pressurize it with 6 to 8 pounds per square inch (psi). You then light the preheater and wait until it preheats the generator. When the generator is hot, open the generator valve until the burner lights. Shut off the preheater and adjust the burner until the flame is blue-green in color. To shut it down, just shut off the generator valve.

If you detect a leak while operating, shut the unit down and let it cool. Then repair the leak. Always inspect the unit for leaks before operating and never operate the M–2 without a fire extinguisher nearby. Figure 3-12 gives a troubleshooting chart for the M–2.

The M–59 field range is an enclosure for using the M–2 burner unit to bake, boil, grill, roast, and deep-fat fry food in the field (fig. 3-13). If the burner is in the bottom rack of the range, the shutter doors should be closed. If it is operated in the top position, the shutters should be opened. The M–59 can be transported by truck. It does not have any insulation, so it should not be touched while operating.

Immersion Heater. This is a gas operated heater (fig. 3-14) that is immersed in a metal can full of water to do utensil and mess kit cleaning in the field (fig. 3-15). It works by lighting gasoline as it drips down the burner tube and splashes on the burner. The flame is drawn around the doughnut-shaped bottom by a draft. The doughnut heats up and heats the water. Do not light the heater without covering the doughnut with water. Do not operate it without a fire extinguisher in the area. In a mess kit laundry, there is a set of three or more immersion heaters set up to wash equipment. The first contains hot soapy water; the second and third can contain clear boiling water for rinsing.

Exercises (259):

1. Most of the dinning hall equipment contained in a Harvest Bare is what type?

2. Which types of rations is the MKT–75 designed to prepare?

3. What would you do to troubleshoot an M–2 unit that fails to maintain pressure?

MALFUNCTION	CAUSE	CORRECTIVE ACTION
FUEL SYSTEM FAILS TO MAINTAIN PRESSURE.	FUEL DRAIN PLUG IS LOOSE.	TIGHTEN PLUG.
PREHEATER FAILS TO IGNITE.	ORIFICE IS CLOGGED.	CLEAN ORIFICE.
	LOW AIR PRESSURE.	PRESSURIZE FUEL SYSTEM.
BURNER FAILS TO IGNITE.	LOW AIR PRESSURE.	PRESSURIZE FUEL SYSTEM.
	INSUFFICIENT FUEL SUPPLY.	FILL FUEL TANKS.
	GENERATOR INSUFFICIENTLY PREHEATED.	PREHEAT GENERATOR FOR LONGER PERIOD.
YELLOW BURNER FLAME.	AIR CONTROL SHUTTER IMPROPERLY ADJUSTED.	ADJUST SHUTTER.
	MIXING CHAMBER FLOODED.	TURN OFF GENERATOR VALVE, ALLOW FLAME TO BURN OUT AND THEN RELIGHT BURNER.
BLUE BURNER FLAME.	AIR CONTROL SHUTTER IMPROPERLY ADJUSTED.	ADJUST SHUTTER.
BURNER FLAME TOO LOW.	LOW AIR PRESSURE.	PRESSURIZE FUEL SYSTEM.
	INSUFFICIENT FUEL SUPPLY.	FILL FUEL TANK.
BURNER FLAME UNEVEN.	SLOTS IN BURNER ARM CLOGGED.	CLEAN BURNER SLOTS.

22733

Figure 3–12. M-2 trouble shooting.

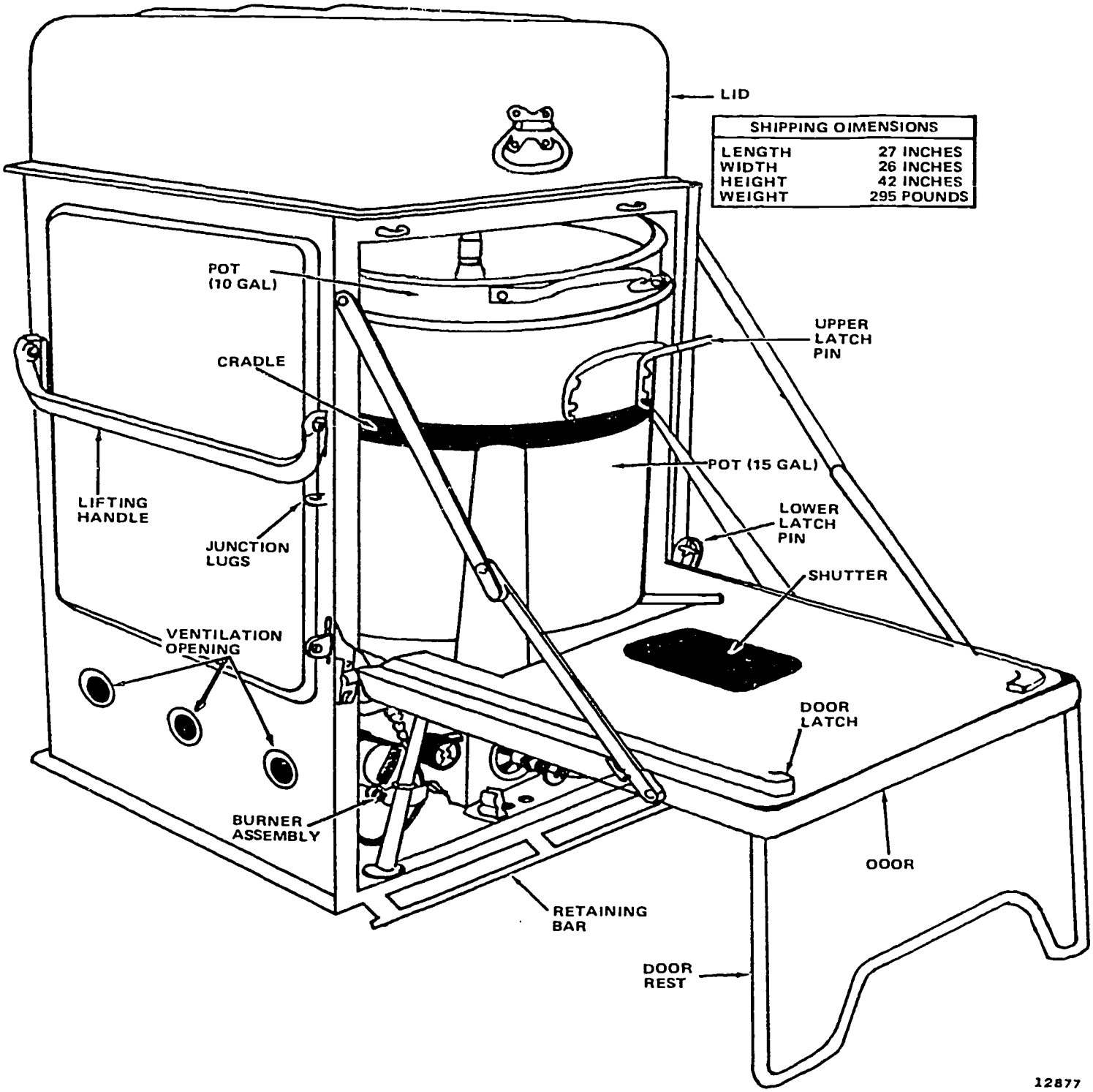

Figure 3–13. M-59 field range.

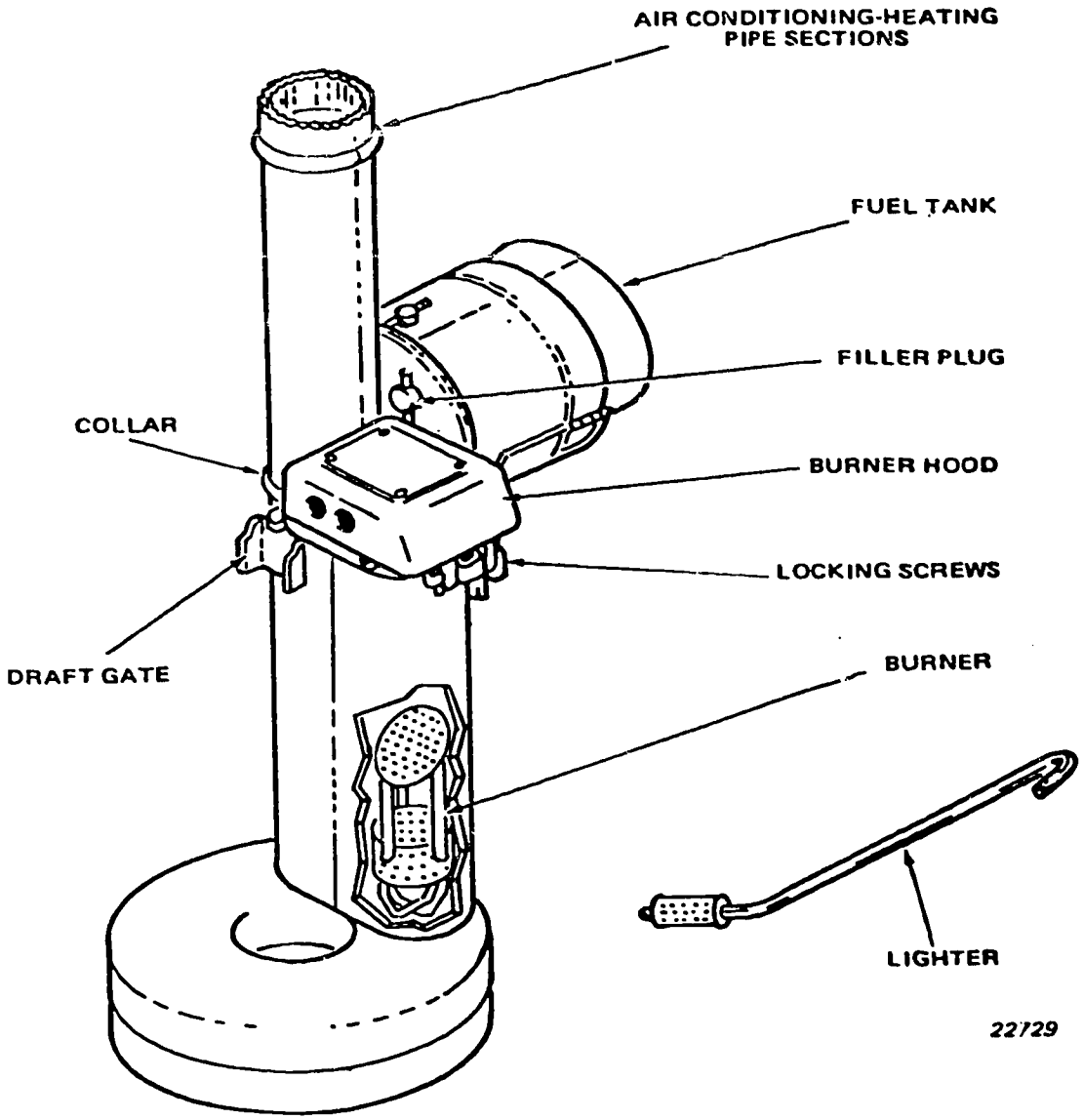

Figure 3–14. Immersion heater.

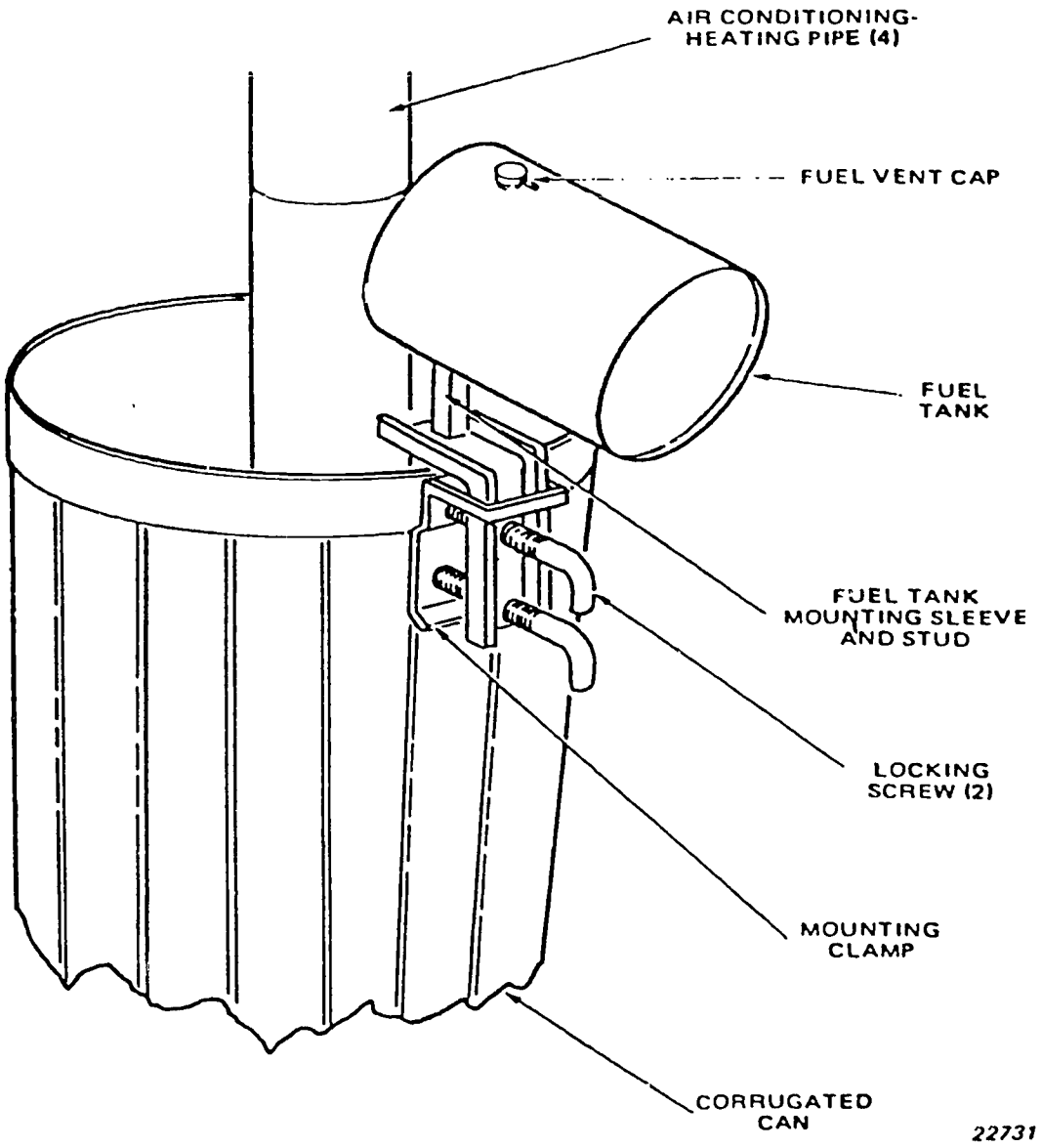

Figure 3–15. Immersion heater with can.

4. What is the trouble when M–2 burner flame burns unevenly?

260. Identify the layout requirements for field kitchens.

Field Kitchen Layout. We will cover the main points on layout in this section. Two major points are: (1) a field kitchen must have a waste disposal area and (2) a smooth traffic flow through the serving line to the dining area and to the mess kit laundry.

In field kitchens, water purification bags (luster bag) are used to store, purify, and dispense drinking water. The bags may be suspended from a tree limb or mounted on poles. Each bag should be suspended over a sump pit to prevent puddling under the bag.

Latrines must be at least 100 yards downhill from kitchen tents for obvious reasons. Food service personnel should not be tasked with latrine setup.

Waste disposal is usually done by burial or burning. If garbage is to be buried, it should be buried at least 30 yards from the kitchen and dining areas. It should be no closer than 100 feet from your water source to prevent water contamination. The garbage pit should be sprayed with insecticide. It should be filled with earth, mounded over the pit at least 1 foot high when the pit is filled to 1 foot below ground surface with garbage or at the end of the day.

If the garbage is to be burned, the incinerator should be located at least 50 yards down wind of the field kitchen.

Liquid kitchen waste is disposed of in the soil by using soakage pits. The pit should have a grease trap to prevent the soil from clogging over with grease. This would prevent the water from soaking into the ground. See figure 3-16 fo an idea of a typical field layout.

Consideration must be given to proper layout of the field kitchen. Plans should include the dining area, food preparation and serving area, fuel area, maintenance area for M–2 burner units, and the storage and sanitation area. The layouts shown in figure 3-16 with storage and waste disposal facilities provide a smooth flow of traffic through the site.

Exercises (260):

1. What are water purification bags used for?

2. What are the two methods for waste disposal?

3. How should you dispose of liquid kitchen waste?

261. State the different types of rations and how they are prepared.

Rations. Preparations for wartime activities are based on three types of rations: The Meal, ready to eat (MRE), which we discussed in the flight feeding sections; A-rations; and B-rations.

A-rations are fresh and frozen food products and are therefore perishable. They can be prepared under field conditions the same way they are prepared in a conventional dining hall. If fresh or frozen foods (A-rations) are to be used, refrigeration is required.

B-rations are canned, bottled, or cartoned rations. The majority of B-rations are dehydrated; therefore, they take special preparation and handling procedures. Foods like dehydrated steaks will fall apart if handled improperly after rehydration. B-rations are nonperishable rations. Follow manufacturer's instructions on rehydration.

MRE, MFF, and B-rations are the basis of food service contingency plans for the first 100 days of a war. The first 10 days will be MREs; the next 90 days will be B-rations. After that we expect to have A-rations available for use. The MRE or MFF and B-rations will be prepositioned in strategic locations in overseas areas. These supplies are known as war readiness material (WRM).

Exercises (261):

1. Fresh and frozen food products are what type of ration?

2. If a ration is dehydrated, which type is it?

3. If a ration must be refrigerated, which type is it? A or B?

4. How long does Food Service expect to serve MREs or MFF in case of war?

262. Name the different types of food contamination and state how to protect the food.

Protection of Food Supplies. During activities on the field, you may be exposed to nuclear, chemical, or biological attack. Food preparation would be impossible during these attacks since the food would get contaminated. Most packaging is enough to protect foods against chemical attacks. You can decontaminate the packaging by washing the container prior to opening it. All containers that were opened during a chemical attack must be discarded. There is no known protection or decontamination of food supplies existing from a nuclear attack at the present time. These

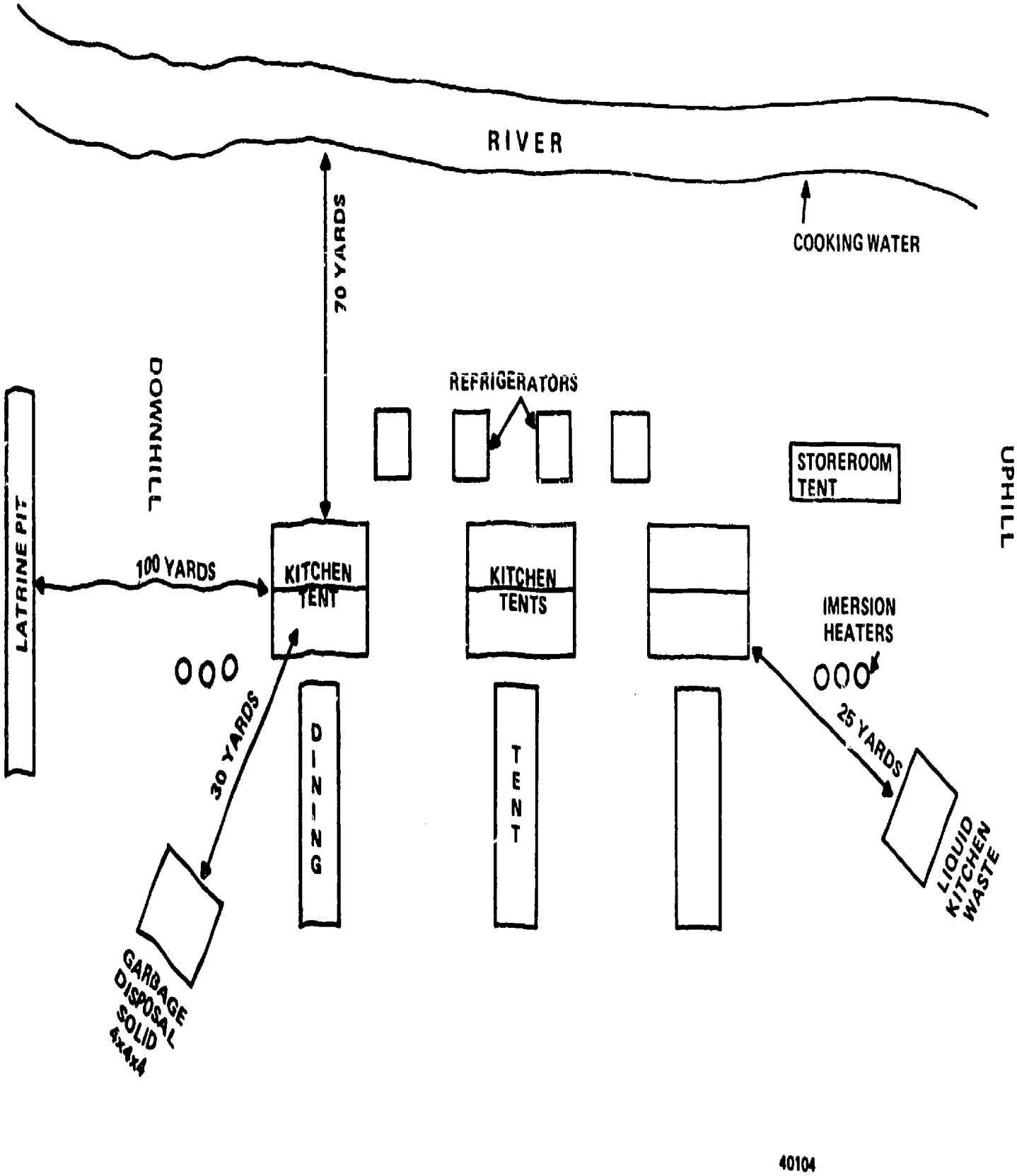

Figure 3-16. Field kitchen layout.

food items must be destroyed. Biological contamination of food would normally occur through the air or the water supply. Most sealed packages will protect the food from air contamination. If there is no safe water supply in the area, A- and B-rations would be impossible to use. In these areas, MRE rations would be used.

Exercises (262):

1. What are the three types of food contamination?

2. What protection from nuclear radiation is currently available for food supplies?

3. How can you decontaminate packaging contaminated during a chemical attack?

263. Specify the proper sanitation procedures for field conditions.

Sanitation. Sanitation in the field is the same as in a conventional dining hall. All hot foods must be kept at 140°F or more and all cold foods must be kept at 45°F or less. Leftovers should be kept for no more than 24 hours. If refrigeration is not available, all leftovers must be discarded.

As a member of the food service team, you should scrub down the field ranges after every meal to prevent food from baking on them. You should clean refrigerators frequently with hot soapy water. You should scrub all tables after use. The tables should have a smooth surface to prevent food particles from being trapped on them.

You should clean all eating and cooking utensils in hot soapy water, rinse in hot water, and disinfect in water of at least 180°F for 30 seconds. Allow them to air dry but protect them from dust. If hot water is not available, wash the utensils in soapy water, rinse in clear water, and immerse them in a chlorine water solution for at least 30 seconds. Air-dry the utensils and keep them free from dust and contamination.

The rules for personal hygiene are the same as they are anywhere else. You should shampoo your hair at least once a week. As food service personnel, you should take a shower once a day. You should keep your uniforms clean; launder them on a daily basis if necessary. You should wash your hands with soap and water after any dirty work or after using the latrine.

You should change your undergarments daily. You should change your bedding at least once a week. You should brush and floss your teeth after every meal. You should get plenty of exercise and rest to promote a fit mind as well as a fit body.

The following are 10 rules for preventing illnesses in the field.

(1) Do not eat food or drink from questionable sources.

(2) Do not defecate on the ground. Use the latrines or dig a cat hole and cover your waste.

(3) Keep fingers and other dirty objects out of your mouth.

(4) Wash hands following any contamination and before handling food.

(5) Wash and disinfect your mess kit after every meal.

(6) Clean mouth and teeth at least once a day and after every meal if practical.

(7) Avoid insect bites by keeping your body clean and using proper protection by using repellents, insect bars, and proper clothing.

(8) Wear clothing according to the climate and if clothing gets wet change it immediately.

(9) Do not share your personal items with other people. Examples are pipes, toothbrushes, towels, hair brushes, combs, handkerchiefs, and shaving items.

(10) Do not use self treatment for illnesses such as stomach problems. See a doctor.

Exercises (263):

1. Hot foods in the field should be kept at what minimum temperature?

2. In the field, you should change your undergarments how often?

3. In the field, how often should you shampoo your hair?

4. Cold foods in the field should be kept at what maximum temperature?

5. In the field, leftovers should be kept no longer than what maximum period?

264. State how accounting is accomplished in a field feeding environment.

Administrative responsibilities are an integral part of Food Service. These responsibilities do not cease if Food Service must go into a field feeding environment. The accountability procedures must be modified to adapt to the field feeding situation.

AF Form 287, Subsistence Request, must be used to obtain subsistence from the commissary. The priced extended copies and any vendor receipts must be retained on file as supporting documents.

AF Form 129, Tally In—Out, will be used for turn-ins to the commissary, transfers to and from other dining facilities, and for subsistence medically condemned items.

The use of AF Form 662, Food Service Production Log, is optional but highly recommended for use as the kitchen operating plan and to direct food preparation and use of leftovers.

DD Form 160, Inventory of Class Quartermaster Supplies, must be used to record (1) a weekly physical inventory and, (2) the physical inventory that must be performed at the close of business on the last calendar day of the month. At the end of the field exercise, turn in AF Form 129 with the remaining subsistence inventory to the support commissary or to an Air Force appropriated fund dining facility. If subsistence is returned to the commissary, the AF Form 129 must be priced and extended by item and clearly annotated INVENTORY TURN-IN. The DD Form 160 is annotated that the inventory was turned in; one copy of the AF Form 129 must be attached.

AF Form 1650, Daily Dining Facility Summary, must be completed on a weekly basis.

Use the BDFA from the host installation plus 15 percent, regardless of anticipated numbers of weighted rations to be served. The 15 percent supplemental allowance is authorized to offset additional subsistence intake due to increased physical activity under field conditions, and the cost of integrating B-ration components in the menu.

The normal accounting cycle for field feeding must remain the calendar month except when a field exercise is of shorter duration. In a field environment, the financial status of the dining facility is posted weekly instead of daily, and a weekly physical inventory is accomplished to determine subsistence used during the week. AF Forms 147 and 148 are not used during exercises and field feeding operations.

Exercises (264):

1. What is the normal accounting cycle for field feeding?

2. In a field environment, when is a financial statement posted?

3. What Air Force forms are not used during exercises or field feeding operations?

4. Why should an AF Form 662 be used?

Bibliography

Department of the Air Force Publications

AFR 140–13, *Air Force Prime Readiness in Base Services (RIBS) Program.*
AFR 146–7, *Food Service Management.*
AFR 146–15, *Flight Feeding.*
AFR 161–26, *Control of Foodborne Illness.*
AFOSH Standard 127–66.
SACR 146–1, *Frozen Foil Pack Meal Program.*

Commercial Manuals

Red Cross Poster Number 1030, July 1981.

Answers for Exercises

CHAPTER 1

Reference:

200 – 1. Hand operated kitchen tools such as knives, meat forks scrapers, scoops, wire whips, and spatula.
2. Water causes the wooden handles to swell and pull away from shaft, and knives left in the water could cause injury to an unsuspecting person.
3. A brush and warm soapy water.
4. Harsh scouring powders and sharp tools. Never use sharp tools to scrape food from the surface because doing so can remove the coating and expose the base metal.
5. Use hot pads and ask for help.
6. Proper circulation of air is necessary to prevent rust.

201 – 1. The wringer removes water from the mop, and the bucket catches and holds water.
2. Wash in warm soapy water; rinse in clear hot water and air dry.

202 – 1. To weigh food portions accurately and assure good portion control.
2. To assure that each customer is getting the amount of meat called for in AFM 146–12 and on AF Form 662.
3. Hot water and detergent.

203 – 1. Close the drain valves, fill the tanks with water, turn on the heating unit, fill the machine with the proper amount of dishwashing compound, and start the machine.
2. At the end of each meal period.
3. At least once each hour.
4. Lime.
5. Required wash water temperature in the tank, required final rinse water temperature, optimum final rinse temperature, and, if applicable, required pumped rinse water temperature in the tank, maximum conveyor speed, and chemical type concentration of sanitizer to be used.
6. 195°F.
7. Between 15 psi and 25 psi.

204 – 1. Fill it with water and heat the water to desired temperature of 180°F.
2. Turn off heating element; drain; remove food particles; clean with scrub brush, cleaning powder, and hot water.
3. Inspect for leaks before use. Never turn on heat until elements are covered with water. Keep floor around steam table dry and free of grease. Ensure that the overflow functions properly.
4. 180°F or less.
5. Heating element.

205 – 1. Each compartment is an entirely separate cooking chamber.
2. Hot soapy water and clear rinse water.
3. To avoid being burned by steam.
4. An automatic defrost cycle in addition to a pressure-delayed timer action.
5. By direct contact of dry steam onto the food.
6. Wash with hot soapy water and then rinse with clear water.

206 – 1. It will crack.
2. A flexible wire brush.
3. Always open the safety valve to let trapped air escape; stand to one side of the kettle when opening the cover to avoid escaping steam; lift the safety valve regularly to make certain the disc is not sticking to its seat.

207 – 1. Air in the mixing tube and burner.
2. After every meal.
3. Keep your hands and arms away from open flames. Always make sure that the oven pilot light is lit and the burner is burning before closing the door. Always use hot pads when handling hot pots and pans. Don't let foods spill over when removing pots from the top of the range.

208 – 1. From 100 to 450°F.
2. Simmering, sautéing, searing, frying and grilling.
3. Make sure the protective grease film applied at the factory is completely cleaned off.
4. Use a cleaning solution of 1 ounce of recommended cleanser to 3 gallons of hot water. Thoroughly brush all parts, including pouring lip, that touch or are splashed by food particularly underside of the cover. (Use a bristled brush).
5. Simmering and boiling.

209 – 1. This causes warping.
2. Open the oven door on the gas oven 10 minutes before lighting to clear away an accumulated gas.
3. Open the gas valve to the ON position and the burners should ignite.
4. Sectional (or stack) and convection.
5. Constantly circulates heated air across and around racked food.
6. It governs the amount of heat and time it will take to return to the selected thermostat setting with a specific load.
7. It disrupts the temperature pattern.
8. Wiped down daily with a damp cloth. Stubborn soil may be removed with a mild detergent solution.
9. Use a mild detergent solution.
10. By running the oven fan for 10 to 15 minutes.
11. To compensate for heat loss when opening the door for loading.

210 – 1. It doesn't use the direct application of heat to cook foods.
2. The unit automatically shuts off.
3. With a cloth or sponge using a recognized and acceptable detergent solution containing bacteria retardant.
4. Metal utensils.
5. Once the cooking cycle is completed.
6. For defrosting or finishing the cooking of meat.

211 – 1. Ten seconds.
2. The sudden application of hot water to a cold cylinder may cause permanent damage to the machine.
3. Dehydrated or liquid.

212 – 1. The feed grip, push plate, or end-slice plate.
2. Once a week.
3. 0.
4. Never use the meat slicer when the knife guard is detached, remove the electrical plug from the socket immediately after each use; keep hands dry while using the slicer; keep hands away from the revolving knife during operation; never push food products against the knife with your hands; never scrub or use scrubbing motion to clean the knife.

213 – 1. Bones or foreign objects.

2. Wood stomper.
3. Disconnect the plug.
4. Remember the knives rotate several seconds after the machine is turned off; never chop foods such as bone, gristle, cheese, soft breads, greens, or any spongy foods; never try to push food into the worm with your fingers.

214 – 1. 2 to 2½ gallons of water to 1 pound of coffee.
2. 185 to 190°F.
3. Clean the urn immediately after each use. Rinse with a small amount of water to remove sediment and old coffee from the bottom of the urn and the drainage line. Put a gallon or more of hot water in the urn and nylon brush the inside carefully, then drain and rinse with hot water until it runs clear. You are now ready to brew up the next batch. At the end of each day, clean and brush the urn several times, then rinse thoroughly with hot water. Remove the clean out cup at the end of the faucets and scrub the pipe leading to the center of the urn; clean the gauge glass with a nylon brush. Rinse well. Scrub the faucet, then rinse it thoroughly with hot water. Overnight, leave a gallon or more of fresh water in the urn until the next morning's use. Remove the cover and clean. When replacing the cover, leave it partly open overnight. The next morning, remember to empty and then rinse the urn with boiling water before starting to brew.
4. On the front.
5. Thoroughly cleansed and rinsed free of detergent after each use.
6. Preheating and brewing.

215 – 1. To peel potatoes and other root vegetables.
2. After every three or four loads.
3. Never overload the peeler. Check rated capacity before loading; ensure that the abrasive disc is secured in place before starting. Never put your hands in the machine when it is operating. Keep water off the motor.

216 – 1. Set the color-control dial, which ranges from light to dark.
2. Line voltage that is higher or lower than the nameplate rating will affect the production and color of the toast.
3. A removable crumb tray is located at the bottom of the toaster or a removable base cover.
4. A clean soft cloth.
5. Use a detergent-soaked damp cloth, followed with a clear damp cloth.
6. For speedy replacement.
7. 20 minutes.
8. 10 minutes.
9. Rust on the chains will threaten the life of the bearings.
10. Boil the racks in soapy water.

217 – 1. Remove the food and place it in another refrigerator immediately.
2. Baking soda or vinegar.
3. Always keep floors free of grease and water.

218 – 1. The amount of ice you need.
2. Panel leading into the crusher.
3. Flip manual control.
4. Varying capacities (50, 200, 300, 400 and 2,000 pounds).

219 – 1. Short circuits, overloads, accidental grounding, poor contacts, and misuse.
2. A long taper.
3. At the hinge side.

220 – 1. To prevent an accumulation of flammable greases.
2. In plain sight of all kitchen machinery.
3. In their own storage area.

221 – 1. Daily.
2. Building fire warden.

222 – 1. The victim clutches his or her throat.
2. When the victim cannot breathe or speak.
3. Try mouth-to-mouth resuscitation.

223 – 1. Open as seldom and briefly as possible; do not operate at a colder temperature than required; and check seals.
2. By removing sediment from around and under the heating elements.
3. AFP 146–21, *Energy Conservation For Airmen Dining Facilities.*

CHAPTER 2

224 – 1. The dining facility (dining hall).
2. When there are several dining facilities on base and it would be impractical to have bakers in every facility.
3. Authorized civilian and military passengers and crewmembers.

225 – 1. Department of Agriculture, medical food inspector, commissary officer, and food service officer.
2. Period of time food can be stored before it must be used.

226 – 1. Perishable and nonperishable.
2. −10 to 10°F.
3. Dairy products absorb the flavor of other products.
4. Swell, springer, flipper, flat sour, leaker, and pinholing.
5. Color, odor, flavor, and appearance.
6. Yes, after the moldy part has been cut off.
7. 32 to 45°F.
8. Overcrowding reduces air circulation that is necessary to ensure uniform temperatures and prevent spoilage.
9. It helps the temperature penetrate other foods.
10. Otherwise, their smoky odor may penetrate other foods.
11. Cans.
12. A swell.
13. A flipper.
14. Either internal or external corrosion.

227 – 1. Using old stock first.
2. (1) Store food loosely.
(2) Store meats away from walls, coils, and other meats.
(3) Cover nonpackaged foods.
(4) Place new stock in back of old stock.
(5) Clean area frequently.
(6) Defrost before one-fourth inch of frost accumulates.
(7) Open door only when necessary and avoid overcrowding.

228 – 1. The process of controlling supplies kept on hand to support our mission.
2. (a) Issuing more or less of an item than is recorded on the AF Form 148 or AF Form 129.
(b) Issuing or returning food without signing for it on an AF Form 148 or AF Form 129.
(c) Signing in more or less of an item than was received.
(d) Failure to check food received from vendors or commissary for quantity.
(e) Mistakes in addition, subtraction, or weight in issuing bulk items or posting the AF Forms 147.
(f) Improper inventory procedures.
(g) Letting cooks or food service attendants get their own food from storage areas.
(h) Recording the wrong prices on issue documents.
(i) Returning food to stock on an AF Form 148, and not putting it back in the storeroom.
3. It consists of ordering, receiving, storing, and issuing food supplies, and keeping detailed records of each transaction in which food is brought into, or removed from the storeroom.
4. The person responsible for security of the food, and store room access is limited to that person and to food service supervisory personnel.

229 – 1. A statement from the base accounting and finance office to show accounting classification and that money is available to pay for the meals.
2. The items needed, the date they're needed, and the justification.

230 – 1. AFR 161–26.
2. 45°F (7°C) or below.
3. It can be used in thawing as part of an uninterrupted cooking process or when the food will be transferred immediately to conventional cooking units.

4. Proper planning and coordination between the dining facility supervisor and storeroom personnel.
5. Thawing out food under potable running water.

231 – 1. To determine the actual cost of food on hand, the accuracy of records, and the effectiveness of internal controls.
2. Food service officer.
3. AF Form 147, Dining Hall Stock Record.
4. At the end of each fiscal year.

232 – 1. The amount of money a substitute food item exceeds the replaced food items price listed in Federal Supply Catalog C8900 PL or LP price.
2. The base medical food inspector identifies an item in the commissary as highly perishable and the item must be used within 96 hours so as to prevent spoilage. The commissary issues it to the dining hall for immediate consumption.
3. If a troop issue item not in stock, a like item of equal or less value is not in stock, and a menu change is not feasible, excess cost may be taken for a higher priced item.
4. When the food items are directed by HQ AFESC to be served in a food service facility, excess cost may be taken for the difference between the new or test item and the original menu item it is substituting, if the test item is higher priced.

233 – 1. A la carte system.
2. A monetary amount paid to enlisted members in place of a meal card.
3. The dollar value of the opening inventory, plus purchases, plus or minus transfers, minus issues to the kitchen.
4. Subsistence in kind (SIK).

234 – 1. To order food from the commissary for the dining halls.
2. Dining Hall Stock Record.
3. AF Form 129, Tally In—Out.
4. Flight Meals.

235 – 1. AF Form 1254, Register of Cash Collection Sheets.
2. Food service officer.
3. AF Form 1339, Dining Hall Signature Record.
4. Collecting and accounting for cash received from the sale of meals.
5. This form serves as a receipt for daily transfer (turn-in) of funds and cash collection sheets from the dining facility to the proper control office, and from the control office to the accounting and finance office.
6. AF Form 812, ALACS Meal Order Record.

236 – 1. A certain amount of cash used to provide change for BAS customers that subsist in dining facilities.
2. Make an inventory of the cash and applicable Air Force forms and sign AF Form 1305.
3. Optional Form 62, Safe or Cabinet Security Record.
4. AF Form 79 or (under ALACS) the master cash register tape.
5. In case there is a break-in, no prin from the day must remain.
6. Dining facility supervisor.
7. The particular feeding system you are under (ALACS, SCAMS, MCAMS).
8. AF Form 1305, Receipt for Transfer of Cash and Voucher.

237 – 1. Safeguarding the change fund, forms, and all cash collected from the sale of meals.
2. AF Form 1305.
3. (1) Identifying and counting authorized patrons.
(2) Obtaining signatures on AF Form 1339 from SIK customers in subsistence credit allowance management system (SCAMS). In a la carte (ALACS), record the identification numbers of SIK personnel into the electronic cash register (ECR).
(3) Collecting proper payment for meals (basic food charge and surcharge if applicable) under ALACS, record the payment in the ECR. In a SCAMS operation get legible signature of cash patrons on AF Form 79.
4. The cashier will not perform any other duty during meal service not related to the cashier functions.

238 – 1. Master recipe file.
2. To cover condiments and frying-fat costs that are not recipe ingredients and food preparation losses (spillage, spoilage, burning, etc.)
3. 600 pages.

239 – 1. A computer printout of every subsistence item in the storeroom.
2. BALANCE column and TOTAL VALUE Column.
3. DD Form 160, Inventory of Class Quartermaster Supplies.
4. The person who took the inventory.

240 – 1. A printout of the recipe cost calculation.
2. A listing of the recipe number, title. portion, size, and the selling price.

241 – 1. It is used to ensure that a la carte facilities get property reimbursed for their subsistence-in-kind patrons.
2. The monetary value of food authorized to feed one enlisted person for 1 day.
3. AF Form 200, Basic Daily Food Allowance Computation.

242 – 1. To calculate manually any price change to a recipe.
2. Nickel.
3. Monthly.

243 – 1. To keep the loss of subsistence (caused by discarding of leftovers or forced issues) to a minimum.
2. 50 percent.
3. It is used to record any selling price used below the normal RAMPS selling price.
4. The dining hall supervisor.

244 – 1. Cashier's functions and manager's functions.
2. Cashier Report.
3. Press food item key.

245 – 1. Time, date, prices, and item descriptions.
2. When you have a power failure, when first setting up the cash register, when the number of days in the month fluctuates, or when switching back and forth from daylight savings time.
3. Before the start of the meal.
4. AF Form 662 and cash register operating instructions.
5. The management functions key lock control.
6. The shift leader or senior cook.

246 – 1. A subsistence management program that is used to audit, at base level, subsistence items.
2. The consumer.
3. Quarterly (every 3 months).

247 – 1. Quarterly.
2. The food service officer.
3. Environmental health office.
4. Air Force Engineering and Service Center.

248 – 1. Fraud.
2. Monetary assets and subsistence.
3. Proper count and control of food.
4. AFR 123–2.

249 – 1. The civilian contractor furnishes the manpower needed and manages the entire food service program. These civilian contractors must follow Air Force regulations and the same rigid standards as the military staffed dining halls.
2. The contractor.
3. The contract.
4. The building, equipment, and the food.

250 – 1. The contracting officer.
2. The QAE identifies the problems.
3. AFR 30–30, *Standards of Conduct*.
4. If a QAE or the QAE's dependents have a business, job, or other financial interest in which profitability is influenced by Air Force duties.

CHAPTER 3

251 – 1. No. Amn Blackwell doesn't meet either of the two requirements necessary to qualify for a box lunch.

2. Yes. Sgt Peters meets the two requirements. He is authorized to eat in an appropriated fund dining hall and he is unable to attend dining hall during normal meal hours because of his or her job.
3. No.

252 – 1. Three hours.
2. Pre-flight, in-flight, and postflight feeding.
3. Precooked, frozen meal.
4. The frozen foil-pack meal.

253 – 1. True.
2. False. They are prepared in the flight kitchens.
3. False. The sandwich meal requires no installation or aircraft equipment.

254 – 1. (1) c.
(2) a.
(3) d.
(4) b.
(5) e.

255 – 1. Subsistence requirements and delivery cycle.
2. Maximum training in all aspects of food service for each person.
3. Weekly.

256 – 1. (1) e.
(2) a.
(3) d.
(4) b.
(5) c.

257 – 1. AF Form 287, Subsistence Request.
2. All food items at the LCFK.
3. AF Forms 1339 and 79.

258 – 1. Prime RIBS.
2. Food, billeting, mortuary affairs, and laundry services.
3. AFR 140–3.
4. Prime Readiness In Base Services.

259 – 1. Conventional.
2. T-rations and B-rations.
3. Tighten the fuel plug.
4. Slots in the burner arm are clogged.

260 – 1. To store, purify, and dispense drinking water.
2. Burial and burning.
3. Place it in soakage pits.

261 – 1. A-rations.
2. B-rations.
3. A-rations.
4. 10 days.

262 – 1. Nuclear, chemical, and biological.
2. None.
3. By washing it.

263 – 1. 140°F.
2. Daily.
3. Once a week.
4. 45°F.
5. 24 hours.

264 – 1. The calendar month except when a field exercise is of shorter duration.
2. Weekly.
3. AF Forms 147 and 148.
4. For use as a kitchen operating plan and to direct food preparation and use of leftovers.

AUGAFS, AL (862647) 1300
631-028 / 40280

STOP - 1. MATCH ANSWER SHEET TO THIS EXERCISE NUMBER.
2. USE NUMBER 2 PENCIL ONLY.

EXTENSION COURSE INSTITUTE
VOLUME REVIEW EXERCISE

62230 02 24

FUNDAMENTALS OF FOOD SERVICE EQUIPMENT AND MANAGEMENT

Carefully read the following:

DO's:

1. Check the "course," "volume," and "form" numbers from the answer sheet address tab against the "VRE answer sheet identification number" in the righthand column of the shipping list. If numbers do not match, return the answer sheet and the shipping list to ECI immediately with a note of explanation.
2. Note that item numbers on answer sheet are sequential in each column.
3. Use a medium sharp #2 black lead pencil for marking answer sheet.
4. Write the correct answer in the margin at the left of the item. (When you review for the course examination, you can cover *your* answers with a strip of paper and then check your review answers against your original choices.) After you are sure of your answers, transfer them to the answer sheet. If you *have* to change an answer on the answer sheet, be sure that the erasure is complete. Use a clean eraser. But try to avoid any erasure on the answer sheet if at all possible.
5. Take action to return entire answer sheet to ECI.
6. Keep Volume Review Exercise booklet for review and reference.
7. If *mandatorily* enrolled student, process questions or comments through your unit trainer or OJT supervisor. If *voluntarily* enrolled student, send questions or comments to ECI on ECI Form 17.

DON'Ts:

1. Don't use answer sheets other than one furnished specifically for each review exercise.
2. Don't mark on the answer sheet except to fill in marking blocks. Double marks or excessive markings which overflow marking blocks will register as errors.
3. Don't fold, spindle, staple, tape, or mutilate the answer sheet.
4. Don't use ink or any marking other than a #2 black lead pencil.

NOTE: **NUMBERED LEARNING OBJECTIVE REFERENCES ARE USED ON THE VOLUME REVIEW EXERCISE.** In parenthesis after each item number on the VRE is the *Learning Objective Number* where the answer to that item can be located. When answering the items on the VRE, refer to the *Learning Objectives* indicated by these *Numbers*. The VRE results will be sent to you on a postcard which will list the *actual* VRE *items you missed*. Go to the VRE booklet and locate the *Learning Objective Numbers* for the items missed. Go to the text and carefully review the areas covered by these references. Review the entire VRE again before you take the closed-book Course Examination.

MULTIPLE CHOICE

Note to Student: Consider all choices carefully and select the *best* answer to each question.

1. (200) Wash pots and pans in hot soapy water and then
   a. rinse in clear hot water and air dry.
   b. rinse in warm water and wipe dry.
   c. rinse in hot clear water and wipe dry.
   d. rinse in warm water and air dry.

2. (201) Scrub brushes, mops, brooms, and squeegees should be cleaned
   a. once a week.
   b. after each use.
   c. before each use.
   d. at the end of the day.

3. (202) The dietetic scales are calibrated either in ounces and 1/4-ounce fractions or in
   a. pounds.
   b. meters.
   c. liters.
   d. grams.

4. (202) Suppose you are carving meat on the serving line. How often should you use the dietetic scales to ensure proper portion control?
   a. Randomly weigh servings at 15-minute intervals.
   b. Weigh servings every thirty minutes.
   c. Weigh entrees every fourth person.
   d. Randomly weigh servings at the beginning, middle, and end of the meal.

5. (203) What is the final sanitizing rinse temperature required for a dishwashing machine?
   a. 200°F.
   b. 180°F.
   c. 160°F.
   d. 140°F.

6. (203) The temperature of the fresh water rinse line should *not* exceed
   a. 170°F.
   b. 185°F.
   c. 195°F.
   d. 200°F.

7. (204) The water temperature of a steam table should *not* exceed
   a. 200°F.
   b. 180°F.
   c. 160°F.
   d. 140°F.

8. (204) To clean a steam table, use
   a. a sponge with vinegar and cold water.
   b. a scrub brush with vinegar and cold water.
   c. a sponge with cleaning powder and hot water.
   d. a scrub brush with cleaning powder and hot water.

9. (205) How often should the compartments of the vertical steamer be cleaned?
   a. After each use.
   b. At least once a week.
   c. After each day's operation.
   d. At least twice a week.

10. (205) How often should the jet cooker be thoroughly cleaned?
    a. After each day's use.
    b. Once a week.
    c. Twice a week.
    d. Only when necessary.

11. (206) Steam-jacketed kettles are built to withstand steam pressure of
    a. 10 to 15 pounds.
    b. 10 to 30 pounds.
    c. 15 to 40 pounds.
    d. 20 to 50 pounds.

12. (206) Which statement is correct concerning the steam-jacketed kettle?
    a. Food must be added after the heat is turned on.
    b. Water must be added after the heat is turned on.
    c. Food or water must be placed in the kettle before the heat is turned on.
    d. Food or water must be removed from the kettle before the heat is turned off.

13. (207) What is indicated if a burner does *not* ignite when the gas is turned on?

a. Air pressure is low.
b. Burner was cleaned improperly.
c. Burner has condensation buildup.
d. Mixing tube and burner are full of air.

14. (208) To remove average soil from the tilting fry pan, what ratio of cleanser to water is needed?

a. 1 ounce of cleanser to 3 gallons of water.
b. 1 ounce of cleanser to 2 gallons of water.
c. 2 ounces of cleanser to 1 gallon of water.
d. 3 ounces of cleanser to 1 gallon of water.

15. (208) To remove hardened soil from a tilt grill, soak for at least

a. 60 minutes.
b. 45 minutes.
c. 30 minutes.
d. 15 minutes.

16. (209) Before lighting ovens, you should

a. clear out gas fumes.
b. turn on gas.
c. preheat them.
d. check pressure gauge.

17. (209) To remove offensive odors in a convection oven, how long should the oven fan be allowed to run?

a. 5 to 10 minutes.
b. 10 to 15 minutes.
c. 15 to 20 minutes.
d. 20 to 25 minutes.

18. (210) If the door of the microwave oven is opened during the cooking process, the unit will

a. shut off.
b. need repair.
c. short circuit.
d. continue to operate.

19. (210) Which type of cooking containers should *never* be used inside a microwave oven?

a. Paper.
b. Plastic.
c. Ceramic.
d. Metal.

20. (211) What is the *maximum* time necessary to wet the cylinder parts of the softserve ice cream machine before operating?

a. 10 seconds.
b. 15 seconds.
c. 20 seconds.
d. 25 seconds.

21. (211) To obtain ice cream of stiff consistency, a softserve ice cream machine must maintain a freezing temperature of

a. 9° to 15°F.
b. 11° to 18°F.
c. 18° to 22°F.
d. 25° to 30°F.

22. (212) When cleaning the meat slicer, remember to keep the cleaning cloth away from the

a. knife guard.
b. slide rods.
c. feeding carriage grip.
d. knife edge.

23. (212) Which of the following is *not* used to push food products against the knife of the meat slicer?

a. Feed grip.
b. Push plate.
c. Hands.
d. End-slice plate.

24. (213) Which part of the meat-and-vegetable chopper forces food into the hopper and against the knife blades?

a. Chopping cylinder.
b. Wooden stomper.
c. Feeding head.
d. Feed worm.

25. (214) What is the holding temperature for coffee brewed in a coffee urn?

a. 180° to 185°F.
b. 185° to 190°F.
c. 190° to 195°F.
d. 195° to 200°F.

26. (215) How often is the peel trap cleaned on a vegetable peeler?

a. After every one or two uses.
b. After every two or three uses.
c. After every three or four uses.
d. After every four or five uses.

27. (216) How long does it take a conveyor toaster to preheat?

a. 5 minutes.
b. 10 minutes.
c. 15 minutes.
d. 20 minutes.

28. (216) Concerning the use of the conveyor toaster, how much time should you allow when changing the temperature from toast to bun operations?

a. 5 minutes.
b. 10 minutes.
c. 15 minutes.
d. 20 minutes.

29. (217) Before cleaning a refrigerator of any type, you must

a. turn off power.
b. check manufacturer's operating instructions.
c. maintain the refrigerator's proper temperature.
d. remove and relocate food in another refrigerator.

30 (218) After turning the selector switch of the icemaking machine, what deflects the ice cubes into the cutter blades to make crushed ice?

a. Slide bar.
b. Deflector shield.
c. Baffle.
d. None of the above.

31. (218) Determining the frequency of operation of the ice machine depends upon the

a. size of the machine.
b. amount of ice needed.
c. number of personnel using the machine.
d. number of ice baffles.

32. (219) Electrical equipment should be operated

a. on a heavy-duty extension cord.
b. on a 3-wire extension cord.
c. on an insulating pad.
d. on a dry surface.

33. (219) The correct operating pressure for steam equipment is

a. the manufacturer's suggested pressure.
b. your supervisor's suggested pressure.
c. 15 pounds per square inch.
d. 7 pounds per square inch.

34. (220) An effective approach to kitchen safety is

a. to use only 7-skill-level workers to operate machines.
b. to have refrigerator doors that open from the outside only.
c. to have constant safety training of kitchen employees.
d. to store insecticides where they are to be used.

35. (220) The recommended lifting limit for a male is

a. 25 pounds.
b. 30 pounds.
c. 40 pounds.
d. 50 pounds.

36. (221) You should report your fire prevention inspections to the fire department by

a. a written report.
b. a formal report.
c. telephone.
d. mail.

37. (221) Select the *first* procedure to follow in reporting a fire.

a. Sound the alarm.
b. Ensure evacuation.
c. Direct the firefighters.
d. Dial the emergency phone number.

38. (222) How many back blows should you administer to a choking victim at one time?

a. One.
b. Two.
c. Three.
d. Four.

39. (222) When giving abdominal thrust to a choking conscious victim, you should position yourself

a. behind the victim.
b. in front of the victim.
c. at the victim's side.
d. on top of the victim.

40. (223) Concerning oven use, how can you conserve energy?

a. By not frequently opening the door to check on the product.
b. By turning up oven temperature to speed cooking.
c. By leaving the oven turned on low to prevent cool-down.
d. By preheating the oven for 30 minutes.

41. (223) Which of the following is the *best* way to conserve energy?

a. Set freezer temperatures lower than required to prevent thawing.
b. Leave the refrigerator door propped open when you are inside.
c. Do not allow liquids to boil when cooking.
d. Leave a steam-jacketted kettle cover open when in use.

42. (224) Alert facilities should avoid serving

a. hot meals.
b. spicy foods.
c. security police.
d. nongaseous foods.

43. (224) The majority of fire station kitchen food is cooked in

a. alert facilities.
b. the flight kitchen.
c. commercial facilities.
d. the main dining facility.

44. (225) Food inspections should be made at *least*

a. once a week.
b. twice a week.
c. once a day.
d. twice a day.

45. (225) When food arrives at your base, it is *first* inspected by the

a. Department of Agriculture.
b. medical food inspector.
c. commissary officer.
d. food service officer.

46. (226) You can generally determine the condition of perishable products by checking the following factors:

a. quality, and quantity.
b. size, shape, and color.
c. color, odor, flavor, and appearance.
d. size, quantity, appearance, and smell.

47. (226) A flipper is a can that

a. opens easily.
b. leaks at the crimp.
c. has internal or external corrosion.
d. has little or no vacuum.

48. (227) Which choice is properly associated with rotation of stock?

a. First in, first out.
b. First in, last out.
c. Use new stock first.
d. Place new stock in front of old stock.

49. (227) Storing food in its natural state means

a. store food loosely.
b. cover nonpackaged foods.
c. store nonperishables in the refrigerator.
d. store food the way it is received.

50. (228) Issues from the storeroom should be made to

a. the senior cook on duty.
b. any cook on duty.
c. the food service officer.
d. the medical food inspector.

51. (229) On what form should you order operational rations?

a. AF Form 147.
b. AF Form 287.
c. AF Form 662.
d. AF Form 1385.

52. (230) When thawing frozen foods in a refrigeration unit, the refrigeration unit temperature should be

a. 25°F.
b. 45°F.
c. 65°F.
d. 70°F.

53. (230) What is the *maximum* permitted temperature of potable running water used for thawing food?

a. 45°F.
b. 60°F.
c. 70°F.
d. 88°F.

54. (231) When is a "disinterested" inventory conducted?

a. At the end of the fiscal year.
b. At the end of the calendar year.
c. During the beginning of the fiscal year.
d. During the end of the calendar year.

55. (231) The ending inventory of the installation food service account must not exceed what percentage of the total earned income for the period?

a. 5 percent.
b. 15 percent.
c. 20 percent.
d. 25 percent.

56. (232) A forced substitution is an item the base medical food inspector determines that, to prevent spoilage, *must* be used within

a. 72 hours.
b. 96 hours.
c. 60 to 90 days.
d. 72 to 96 days.

57. (233) An Air Force system in which military members on separate rations pay for each item they select is the

a. A La Carte System.
b. Subsistence Issue System.
c. Basic Food Allowance System.
d. Subsistence Credit Allowance Management System.

58. (233) Members of service branches other than active duty where reimbursement comes from separate funds are called

a. BAS members.
b. cross service members.
c. common service members.
d. SIK members.

59. (234) The commissary officer must receive AF Form 287, Subsistence Request, *at least*

a. 24 hours before issue.
b. 35 hours before issue.
c. 48 hours before issue.
d. 60 hours before issue.

60. (234) AF Form 147, Dining Hall Stock Record, is used to

a. transfer food from one facility to another.
b. draw subsistence from the commissary to the dining hall.
c. inform the cooks what is prepared.
d. control all food supplies in a food service facility.

61. (234) The title of AF Form 2039 is

a. Request for Flight Meals.
b. Ground Support Meal Request.
c. Request for Ground Meals.
d. Request for Flight Meals.

62. (235) Which of the following forms should be kept in a safe?

a. AF Forms 1305, 1212, and 287.
b. AF Forms 1339, 1254, and 79.
c. AF Forms 148, 147, and 129.
d. AF Forms 1305, 1131, and 714.

63. (235) Which Air Force form is used as a cash collection record?

a. AF Form 1339.
b. AF Form 1305.
c. AF Form 1254.
d. AF Form 79.

64. (236) the title of AF Form 1305 is

a. Cash Collection Record.
b. Dining Hall Signature Record.
c. Record of Cash and Forms.
d. Receipt for Transfer of Cash and Vouchers.

65. (236) When should fingerprints be wiped off the safe?

a. At the end of the day.
b. At the beginning of the day.
c. After every meal.
d. After every use.

66. (237) Which of the following is a key cashier duty?

a. Forecasting BAS requirements.
b. Forecasting SIK requirements.
c. Controlling patron food servings.
d. Identifying and counting authorized patrons.

67. (237) Which of the following publications describes fund protection?

a. AFR 125-37.
b. AFR 127-13.
c. AFR 146-7.
d. AFR 146-15.

68. (238) Which RAMPS document contains complete standard recipes with all the ingredients and costs for 100 portions?

a. Master recipe file.
b. Portion price index.
c. Item inventory listing.
d. Item pricing form.

69. (238) The system that is used to figure out the selling price of food items by computer is

a. SCAMS.
b. MCAMS.
c. RAMPS.
d. IAMPS.

70. (239) A RAMPS computer printout of every subsistence item in the storeroom is

a. a Portion Price Index.
b. a Master Recipe File.
c. an Item Inventory Listing.
d. an Item Pricing Form.

71. (239) The inventory form that the Item Inventory Listing replaces under SCAMS is

a. DD Form 714.
b. DD Form 160.
c. AF Form 148.
d. AF Form 129.

72. (240) What are the columns of AF Form 662 that require information from the RAMPS Portion Price Index?

a. Serving Size and Unit Price columns.
b. Servings Sold and Cash Register Code columns.
c. Quantity to Prepare and Servings Sold columns.
d. Unserved Portions and Recipe Number columns.

73. (240) Which of the following should you research to find the selling price, portion size, and recipe number of a specific food item?

a. Master Recipe File.
b. Item Pricing Form.
c. Item Inventory Listing.
d. Portion Price Index.

74. (241) What AF Form is replaced by the RAMPS BDFA computation?

a. AF Form 200.
b. AF Form 662.
c. AF Form 1119.
d. DD Form 1101.

75. (241) The BDFA computation is contained in which of the following?

a. The Master Recipe File.
b. Portion Price Index.
c. Inventory Audit Listing.
d. Error/Audit List.

76. (242) Which of the following is one reason to use an AF Form 1212?

a. Use of alternate menus.
b. use of recipes found in the Portion Price Index.
c. Use of troop issue foods.
d. Use of recipes not found in RAMPS.

77. (242) After a recipe is in the RAMPS system, the AF Form 1212 is sent to the staff office and kept on file for

a. one year.
b. one quarter.
c. one month.
d. one week.

78. (243) Which of the following is a reason to use the AF Form 1213?

a. To calculate the gain or loss of ALACS facilities.
b. To calculate recipes using reduced cost items.
c. To change selling price to make money.
d. To reduce the price of leftovers.

79. (244) Which of the following key positions is used for all manager functions?

a. W key position.
b. X key position.
c. Y key position.
d. Z key position.

80. (244) Ringing sales of SIK, Cash Customer, and Cross Service Customers is accomplished in

a. manager's functions.
b. cashier's functions.
c. manager's fund.
d. cashier's fund.

81. (245) Which listed form is used as a reference when programming cash registers with prices?

a. AF Form 147.
b. AF Form 148.
c. AF Form 287.
d. AF Form 662.

82. (245) An electronic cash register has at least how many preset keys?

a. 40.
b. 70.
c. 100.
d. 150.

83. (246) The Armed Forces Consumer Level Subsistence Appraisal Program (AFCLSAP) accomplishes which of the following?

a. Feedback from management to the consumer.
b. A management tool to obtain minimum food quality.
c. Compliance with specification requirements.
d. Minimum use of all subsistence.

84. (246) The Air Force Engineering and Services Center (AFESC) determines AFCLSAP audit items based on

a. low dollar value.
b. the worldwide menu.
c. the location of the base.
d. complaints from the field.

85. (247) COLEQUAP Audit is the title of

a. AF Form 2061.
b. AF Form 2062.
c. AF Form 2063.
d. AF Form 2064.

86. (247) Which of the following is a responsibility of food service under the Consumer Level Quality Audit Program (COLEQUAP)?

a. Determine date and time of audit.
b. Determine items to be audited.
c. Complete AF Form 2063.
d. Forward completed forms to AFLSC.

87. (247) Completion of the questionnaire and the Fool Service audit form is accomplished by the

a. food service officer.
b. dining hall supervisor.
c. cook preparing the item.
d. Environmental Health Office.

88. (248) Extravagant, careless, or needless expenditure of Government resources is

a. fraud.
b. deceit.
c. abuse.
d. waste.

89. (248) The Air Force regulation covering fraud, waste, and abuse is

a. AFR 123-2.
b. AFR 124-2.
c. AFR 146-7.
d. AFR 146-8.

90. (249) When a food service operation is contracted to a civilian firm, what is the Government required to furnish the contractor?

a. Building, equipment, and the food.
b. Building, management, and the food.
c. Manpower, equipment, and the food.
d. Manpower, building, and the food.

91. (249) Which choice is correct concerning the duties of contract workers?

a. They are the same as duties of military and civil service workers.
b. They depend on the wording of the contract.
c. They are technical, professional, and clerical duties.
d. They depend on their union contract.

92. (250) The eyes and ears of the contract officer and the food service officer is the

a. AQE.
b. QEA.
c. QAE.
d. EQA.

93. (250) Which of the following is a duty of the quality assurance evaluator (QAE)?

a. Checks performance of military personnel.
b. Submits documentation to the contracting officer each day.
c. Performs medical food inspections.
d. Evaluates and documents contractor performance.

94. (251) In order to [illegible] a ground-support meal, individuals must be authorized to eat in an appropriated fund dining hall and be unable to attend the dining hall during normal meal hours because of

a. traffic problems
b. their jobs.
c. off-duty employment.
d. participation in squadron sports.

95. (251) Monetary allowance for ground-support meals under SCAMS, depending on the meal served, is

a. 10 or 20 percent of the BDFA.
b. 20 or 30 percent of the BDFA.
c. 20 or 40 percent of the BDFA.
d. 10 or 40 percent of the BDFA.

96. (252) Which phase of flight feeding is cited in the text as stimulating both physical processes and morale of crewmembers?

a. preflight.
b. Inflight.
c. Postflight.
d. Prior flight.

97. (252) The meal that consists of commercially prepared main course food items is the

a. sandwich meal.
b. meal, ready to eat.
c. frozen foil-pack meal.
d. pre[illegible] meal.

98. (253) During preparation, bite-size meals should be heated

a. at 350°F for 5 minutes.
b. before pasteurizing.
c. at 350°F for 10 minutes.
d. aboard the aircraft.

99. (253) Bite-size meals should be refrigerated

a. within 6 hours of preparation.
b. immediately after preparation.
c. immediately before issue.
d. before wrapping them in foil.

100. (254) The flight kitchen serving in excess of 1500 meals a month is a type

a. A kitchen.
b. B kitchen.
c. C kitchen.
d. D kitchen.

101. (254) Flight food service equipment is washed in hot soapy water having a temperature of

a. 75 to 120°F.
b. 120 to 130°F.
c. 140 to 150°F.
d. 170°F.

102. (254) In a flight kitchen, which of the following cleaning procedures uses a water temperature of 140-150°F?

a. Prewash.
b. Wash.
c. Rinse.
d. Sanitize.

103. (255) All missile-site feeding requirements are the responsibility of

a. the central preparation facility.
b. the central distribution center.
c. the launch central facility.
d. food service.

104. (255) Food Service inspects the central distribution section (CDS)

a. daily.
b. weekly.
c. monthly.
d. quarterly.

105. (255) To assure m[illegible]ning of food service personnel, food se[illegible]

a. rotate personnel between base and missile sites.
b. leave competent personnel where they work best.
c. train each individual for a specific job.
d. send only trainees to missile sites.

106. (256) What meal is used in most missile-site feeding situations?

a. Meal, ready to eat.
b. Meal, cooked frozen.
c. Frozen foil-pack meal.
d. Sandwich meal.

107. (256) The meals for missile-site feeding are shipped from the central preparation facility (CPF) to a

a. launch control facility.
b. central distribution section.
c. manned missile site.
d. central contention center.

108. (256) Concerning the preparati[illegible] of frozen foil-pack meals, the foil packs must be fi[illegible] and sealed within

a. 10 minutes.
b. 15 minutes.
c. 20 minutes.
d. 25 minutes.

109. (257) AF Form 147 is used to keep a stock record of frozen foil-pack meals (FFPMs) at the

a. launch-control facility kitchen (LCFK).
b. central distribution section (CDS).
c. central preparation facility (CPF).
d. manned site.

10. (257) FFPMs are issued to the launch-control facility kitchen (LCFK) on

a. AF Form 421.
b. AF Form 420.
c. AF Form 257.
d. AF Form 129.

111. (257) SAC Forms 420 and 420a will be turned in to the central distribution section (CDS) at the end of

a. each cook's shift.
b. each month.
c. the week.
d. the day.

112. (258) The Air Force regulation governing the Prime RIBS Program is

a. AFR 148-6.
b. AFR 146-7.
c. AFR 143-8.
d. AFR 140-3.

113. (258) The Prime RIBS Program has how many goals?

a. Two.
b. Four.
c. Six.
d. Eight.

114. (259) Concerning field feeding, the Harvest Eagle is

a. a semipermanent structure.
b. mounted on a 10- by 8-foot trailer.
c. a tent city.
d. a screened kitchen tent.

115. (259) The M-2 burner's fuel tank must be pressurized to

a. 8 to 10 psi.
b. 6 to 8 psi.
c. 4 to 6 psi.
d. 2 to 4 psi.

116. (260) Latrines must be located at least how far downhill from the kitchen tent?

a. 25 years.
b. 50 yards.
c. 100 yards.
d. 200 yards.

117. (260) A grease trap is used with

a. latrines.
b. water purification bags.
c. soakage pits.
d. incinerators.

118. (261) On which three types of rations are preparations for wartime activities based?

a. A, B, and C rations.
b. A, B, and MRE rations.
c. B, C, and MRE rations.
d. A, B, and fresh rations.

119. (261) What ration requires refrigeration?

a. A-rations.
b. B-rations.
c. Boxed rations.
d. MREs.

120. (262) Which of the following, if any, protects food products from chemical contamination?

a. Using MRE rations.
b. Washing the container.
c. There is no protection.
d. Avoiding air contact.

121. (262) Biological contamination normally occurs through

a. the air or water supply.
b. radiation exposure.
c. chemical attack.
d. cleaning solutions.

122. (263) In the field, eating utensils should be disinfected by

a. washing in hot soapy water.
b. soaking in water of at least 180°F for 30 seconds.
c. soaking in chlorine solution for 5 seconds.
d. soaking in water of 140°F for 30 seconds.

123. (264) In a field environment, when is the financial status of the dining facility posted?

a. Daily.
b. Weekly.
c. Semimonthly.
d. Monthly.

124. (264) Which of the following forms are *not* used during field exercises?

a. AF Forms 147 and 148.
b. AF Forms 287 and 129.
c. AF Forms 1119 and 1650.
d. AF Forms 129 and 1650.

END OF EXERCISE

MAIL TO: ECI, GUNTER AFS AL 36118-5643

STUDENT REQUEST FOR ASSISTANCE

PRIVACY ACT STATEMENT

AUTHORITY: 10 USC 8012. PRINCIPAL PURPOSE: To provide student assistance as requested by individual students. ROUTINE USES: This form is shipped with the course package and used by the student, as needed, to place an inquiry with ECI. DISCLOSURE: Voluntary. The information requested on this form is needed for expeditious handling of the student's inquiry. Failure to provide all information would result in slower action or inability to provide assistance to the student.

CORRECTED OR LATEST ENROLLMENT DATA

1 THIS REQUEST CONCERNS COURSE (1-6)

2 TODAY'S DATE

3 ENROLLMENT DATE

4 AUTOVON NUMBER

5 SOCIAL SECURITY NUMBER (7-15)

6 GRADE RANK

7 NAME (17) (18) (19-32)

8 ADDRESS (33-53)

(54-75)

9 NAME OF BASE OR INSTALLATION IF NOT SHOWN ABOVE

10 TEST CONTROL OFFICE

REQUEST FOR MATERIALS, RECORDS, OR SERVICE

11 (Enter an X through number in box to left of service requested)

X	
1	Request address change as indicated in Section I, Block 8.
2	Request Test Control Office change as indicated in Section I, Block 10.
3	Request name change correction. (Enter Old or Incorrect data here)
4	Request Grade Rank change correction.
5	Correct SSAN. (Enter incorrect SSAN here) (Correct SSAN should be shown in Section I)
6	Extend course completion date. (Justify in "Remarks")
7	Request enrollment cancellation. (Justify in "Remarks")
8	Send VRE answer sheets for Vol's: 1 2 3 4 5 6 7 8 9 10 Originals were: [ ] Not received [ ] Lost [ ] Misused
9	Send course materials. (Specify in "Remarks") [ ] Not received [ ] Lost [ ] Damaged
10	Course exam not yet received. Final VRE submitted for grading on ____ (date)
11	Results for VRE Vol's: 1 2 3 4 5 6 7 8 9 10 not yet received. Answer sheet(s) submitted ____ (date).
12	Results for CE not yet received. Answer sheet submitted to ECI on ____ (date)
13	Previous inquiry [ ] ECI Form 17, [ ] ltr, [ ] msg) sent to ECI on ____ (date)
	Request instructional assistance as requested on reverse. (Specifically in "Remarks")

REMARKS

FOR ECI USE ONLY

16 G 33

K VOL 33-35 CR 36-38

M 34 35-36

N 33-35

VOL 33-35

P TC 36-37 38

DOE 39-45

Q 33-34 0.0 38 1

MC 39-42

OJT STUDENTS must have their OJT Administrator certify this record.

ALL OTHER STUDENTS may certify their own requests.

I certify that the information on this form is accurate and that this request cannot be answered at this station.

SIGNATURE

ECI FORM DEC 84 17 PREVIOUS EDITION WILL BE USED.

REQUEST FOR INSTRUCTOR ASSISTANCE

NOTE: Questions or comments relating to the accuracy or currency of subject matter should be forwarded directly to proponent agency. For an immediate response to these questions, call or write the course author directly, using the AUTOVON number or address in the preface of each volume. All other inquiries concerning the course should be forwarded to ECI.

VRE ITEM QUESTIONED:

COURSE NO _____

VOLUME NO _____

VRE FORM NO _____

VRE ITEM NO _____

ANSWER YOU CHOSE _____ (Letter)

HAS VRE ANSWER SHEET BEEN SUBMITTED FOR GRADING?

( ) YES ( ) NO

REFERENCE

(Textual reference for the answer I chose can be found as shown below:)

IN VOLUME NO _____

ON PAGE NO _____

IN ( ) LEFT ( ) RIGHT COLUMN

LINES _____ THROUGH _____

MY QUESTION IS:

REMARKS

ADDITIONAL FORMS 17 available from trainers, OJT and Education Offices, and ECI. Course workbooks have a Form 17 printed on the last page.

ECI FORM 17, DEC 84 *(Reverse)*