DOCUMENT RESUME

ED 272 066 HE 019 488

AUTHOR Young, Michael E.; Haight, Michael J.
TITLE An Approach to Student Flow Analysis: An Application of the NCHEMS Costing and Data Management System.
INSTITUTION National Center for Higher Education Management Systems, Boulder, Colo.
PUB DATE Nov 80
NOTE 230p.; Some pages may be marginally legible due to broken print.
PUB TYPE Guides - Non-Classroom Use (055) -- Tests/Evaluation Instruments (160)

EDRS PRICE MF01/PC10 Plus Postage.
DESCRIPTORS College Administration; College Credits; College Planning; College Programs; College Students; *Computer Software; *Departments; *Enrollment Trends; Faculty Workload; Higher Education; *Majors (Students); *Management Information Systems; *Predictive Measurement; Program Implementation
IDENTIFIERS Costing and Data Management System; Department Workload; National Center for Higher Educ Management Systems; *Student Flow Model

ABSTRACT

An analytic system for colleges that involves student flow calculation, an historical curriculum matrix, and departmental workload forecasts is examined. The conceptual base, uses of the data, technical issues, and implementation are covered. The student flow calculation uses enrollment trends to develop the probability of a student with a given major and student level being in another major/student level in the next year. The curriculum matrix describes in credit hours the relationship between students majoring in various degree programs and the departments from which they draw instructional services. These two steps provide outputs to produce departmental workload forecasts. Included are sample output reports (historical transition probabilities, projected headcount enrollment, detailed and summary department workload, and curriculum matrix). A technique for historical analysis of student flow is described in detail, along with techniques for enrollment and credit hour projection using the National Center for Higher Education Management Systems' software, the Costing and Data Management System (CADMS). Four enhanced software programs are also covered. Appendices include: control record forms that illustrate fields for: historical student flow, projected student flow, projected department workload, and projected credit hours. (SW)

ACKNOWLEDGEMENTS

Mr. R. Victor Martin of Arziona State University was substantially involved in the software design and computer programming of the system described in this document.

The Ohio State University and The New Mexico Bureau of Education Finance and Post-Secondary Education provided the time and resources necessary to develop the technique and system.

Mr. Richard Cady of The University of New Mexico provided helpful thoughts as well as the bibliography.

Mr. John W. Orwig of The Ohio State University completed many test runs and produced the sample reports.

Mary J. Leggett typed numerous drafts of the document.

Our special thanks go to Mr. Chisholm of The National Center for Higher Education Management System who recognized, early on, the value of these techniques for college and university planing and manangement. Mr. Chisholm also provided a thoughtful, thorough, conscientious, and helpful review of the preliminary draft which substantially improved the final document.

Finally, we want to thank Caroline Andree, William Johnston, Lynn Phillips, and Clara Roberts of the NCHEMS staff for their efforts in the final editing, typing, and production of this document.

Preface

This document was produced as part of NCHEMS Strategic Planning Project. NCHEMS contracted with Michael E. Young, Director of Planning Studies at the Ohio State University, and Michael J. Haight, formerly of the New Mexico Bureau of Education Finance and Post-Secondary Education, to write this document because of their unique qualifications and background. They are both also former employees of NCHEMS and were very active in the initial design and implementation of the Costing and Data Management System (CADMS). Michael Haight was one of the chief authors of the Student Data Module (SDM) and Data Management Module (DMM) of CADMS, and Michael Young was responsible for much of the early training and dissemination efforts of CADMS. After leaving NCHEMS to go on to work at the Ohio State University and in New Mexico, they continued to work with the CADMS software and developed the student-flow applications of that software described in this document.

We felt that these applications would be of interest and value to other institutions and that they were also related to project work currently ongoing at NCHEMS. Many schools have purchased the CADMS software for cost analysis and resource requirement projections, but one of the most useful

and commonly used parts of the NCHEMS software is its Student Data Module, which takes institutional student registration data and produces induced course load matrices (ICLM's). An ICLM, or curriculum matrix, arrays students of different levels and programs (majors) by the departments and course levels in which they are enrolled. Many institutional planners have found that these reports provide useful information about: (1) the curricular demands of programs on departments, (2) the intrainstitutional market that is being served by different departments or courses within the institution, and (3) the impacts on departments that may be expected from changes in program enrollment or on curriculum requirements.

As part of its multi-year project to develop strategic planning approaches and concepts for postsecondary education, NCHEMS is developing an enrollment analysis approach called the Enrollment Analysis Matrix (EAM).[1] The EAM concept focuses on the enrollment interface between the environment and the institution, but it is also concerned with the analysis of institutional student data and the insight to the internal workings of the

---

1. See the Enrollment Analysis Matrix Concept, NCHEMS, 1980, --- (as determined by final publication details)

institution that can arise from that type of study. Thus, the student flow adaptation of CADMS by Michael Young and Michael Haight represents a specific application of an EAM approach to institutional planning.

In addition, we felt that the methods described in this document were simple and straightforward, and that they could be of value to researchers at many institutions. All current users of the CADMS software should be able to implement these methods by using their own versions of SDM and DMM. But, since these calculations use only a small part of the entire CADMS package, they should also be fairly easy to develop by those who do not currently have CADMS.

NCHEMS has put together a tape that contains those parts of SDM and DMM that are necessary to implement the student flow calculations described in this document. This tape also includes some new programs developed by Michael Haight and Victor Martin that produce more readable reports than SDM and that facilitate the translation of institutional student data into the correct format for input into SDM. Either a current CADMS user or someone who does not currently have CADMS could purchase this tape, and

then, using this document as a guideline[2], implement the different student flow, department credit hour projections, and curricular matrix reports possible with this approach.

While the CADMS software provides a readily accessible and flexible tool for implementing student flow analysis, other software systems could also be used. Any researchers who wanted to develop their own software for these techniques should be able to follow the general design described in this document. Finally, there may be some institutions that do not have the resources to either develop their own software or to install the CADMS package without some difficulty. In these cases, the NCHEMS Direct Assistance Network is a resource that can provide consultants, for a daily fee, that are familiar with this system and who could greatly facilitate the implementation of the CADMS student flow package at an institution.

2. The NCHEMS CADMS Data Management Module Reference Manual, Technical Report 62, and the NCHEMS CADMS Student Data Module Reference Manual, Technical Report 60, are also required to use this system.

TABLE OF CONTENTS

TABLE OF CONTENTS (CONTINUED)

LIST OF FIGURES

CHAPTER I
CONCEPTUAL OVERVIEW

EXECUTIVE SUMMARY

The analytic system described in this document is designed to allow institutions of higher education to address questions of the following type:

1. What is the likely department workload that will occur next autumn for upper division undergraduate courses in English?

2. What is the probability that a junior majoring in Accounting this fall will be a senior in Accounting next fall? What is the probability of that student shifting to Marketing?

3. What are the comparative retention/attrition rates for students of various majors?

4. What is the credit hour impact of advanced undergraduate Physics majors on the Math Department as well as on other departments?

The system consists of three steps. The first step, Student Flow Calculation, computes the relationship of enrollments by major and student level from one year to another. This calculation utilizes historical enrollment trends and a simple flow technique to develop the probability of a student with a given major and student level being in another major/student level in the next year.

The second step is the construction of a historical Curriculum Matrix (CM). This matrix describes, in credit hours, the relationship between students majoring in various degree programs and the departments from which they draw instructional services.

The third and final step of the system combines the outputs of the first two steps to produce Departmental Workload Forecasts. The remainder of this Executive Summary discusses each component of the system.

A. STUDENT FLOW CALCULATION

The student flow calculation computes the percentage of students of a given major and rank in one period who end up with a given major and rank in a subsequent period. For example, what percentage of junior Accounting majors in Autumn Quarter 1978, were enrolled as senior Accounting majors in Autumn Quarter 1979; what percentage graduated; what percentage remained junior accounting majors, etc. Figure 1 is a display of student flow transitions.

FIGURE 1

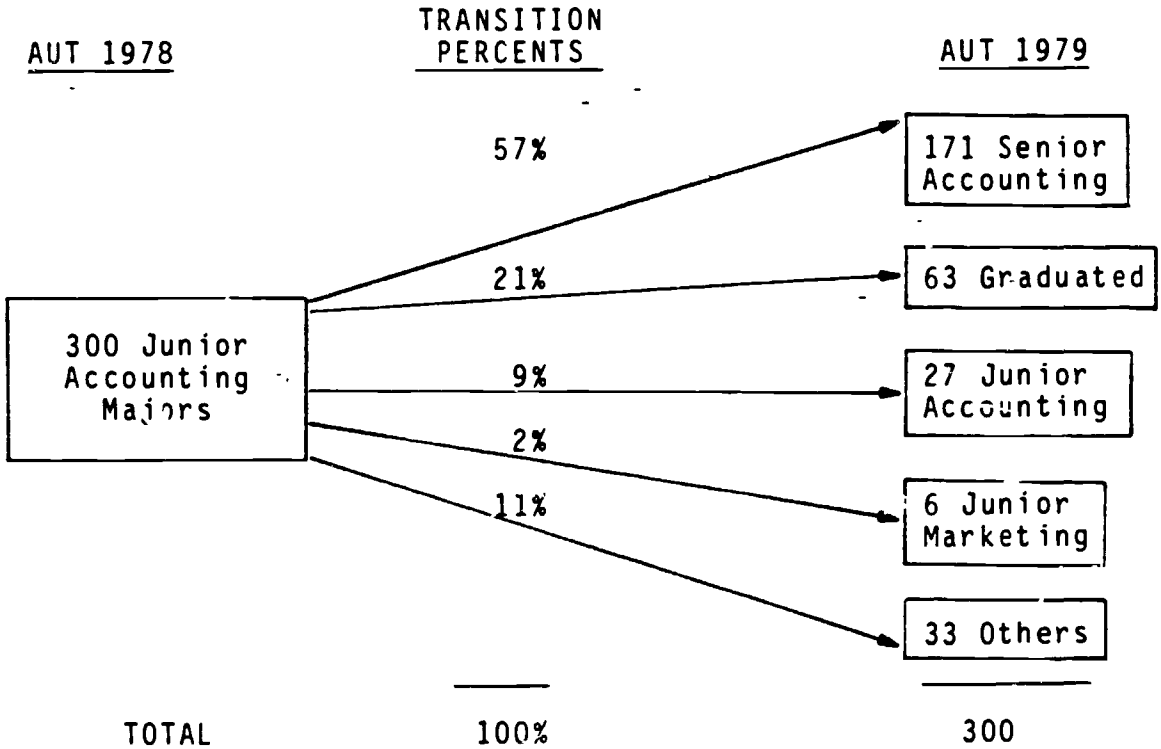
AUT 1978
TRANSITION PERCENTS
AUT 1979
300 Junior Accounting Majors
57%
21%
9%
2%
11%
171 Senior Accounting
63 Graduated
27 Junior Accounting
6 Junior Marketing
33 Others
TOTAL
100%
300

B. CURRICULUM MATRIX:

A Curriculum Matrix can be one of two types of reports. The first report is Credit Hours Taken, which is organized by student major. It shows the average number of credit hours taken by each student major from each instructional department. The second report is Credit Hours Taught which is organized by department and shows the average number of credit hours taught by each department to each student major. Figure 2 is a simplified Credit Hours Taken Curriculum Matrix:

FIGURE 2

CURRICULUM MATRIX

Average Number of Credit Hours Taken by Majors in:

DEPARTMENTS	HIST	ENGLISH	MATH
PSYCH	3.5	1.0	1.0
HIST	6.0	3.0	3.0
ENGL	3.0	6.0	3.0
MATH	2.5	3.0	6.0
TOTAL	15.0	13.0	13.0

This Curriculum Matrix shows that History Majors take, on the average, 3.5 credit hours from the Psychology Department; 6.0 credit hours from the History Department; 3.0 credit hours from the English Department and 2.5 credit hours from the Math Department.

C. DEARTMENTAL WORKLOADS:

Projection of departmental workloads is obtained by first projecting enrollments in the various student major categories. This projection can be made by using the student flow transitions computed in Step A. These projected enrollment data are then multiplied by the proper curriculum matrix elements to give projected departmental workloads. For example - suppose the student flow calculations are used to project that the University will enroll 300 History majors, 200 English majors and 100 Math majors. Multiplying the columns of the sample curriculum matrix, displayed in Figure 2 by 300, 200, and 100 respectively produces the workload matrix shown in Figure 3.

FIGURE 3

PROJECTED WORKLOAD MATRIX

MAJOR / DEPT	HIST	ENGLISH	MATH	TOTAL PROJECTED DEPT. WORKLOAD
PSYCH	1,050	200	100	1,350
HIST	1,800	600	300	2,700
ENGL	900	1,200	300	2,400
MATH	750	600	600	1,950
TOTAL	4,500	2,600	1,300	8,400

Thus, the projected total departmental workload, based on the sample historical curriculum matrix in Figure 2 and sample projected student majors of 300, 200, and 100 head-count students in History, English and Math respectively, produces 1,350 credit hours in the Psychology Department. (3.5 x 300 + 1.0 x 200 + 1.0 x 100). Similar calculations produce projected workload of 2,700 credit hours in the History Department; 2,400 credit hours in the English Department; and 1,950 credit hours in the Math Department. Projected total University workload is 8,400 student credit hours.

D. USES OF THE DATA:

All of the above reports have potential benefit to institutional administrators. Projected credit hour workloads have obvious utility in the institutional budgeting process. In an era of stable or declining resources, when funding for new and expanding programs must be redirected from existing programs, the ability to identify departments with slack resources, as well as those requiring additional resources, becomes extremely important. The institution that can project resource demand in a reasonably accurate fashion can remove several years lag time from the resource reallocation process. In addition, intermediate steps in the process produce useful results independently of their association with projected departmental workloads.

The Credit Hours Taken Report (See Figure 2, 7, 13) of the curriculum matrix can be used by a dean or department chairman to determine in which departments, and at what course levels his/her majors are taking courses. Are upper division students taking an unexpectedly large number of credit hours in lower division courses? Are students taking a large number of credit hours in unexpected disciplines? If so, perhaps the department or college is not offering a broad enough array of courses.

A Credit Hours Taught Report (See Figures 8, 14) can be used to determine what majors and what levels of students are taking courses offered by a department. Typical questions include: Are an unexpectedly large number of lower division students taking upper division courses or vice versa? Are students of unexpected majors taking credit hours taught by the departments? Are non-majors taking courses intended primarily or exclusively for majors? Different course consumption patterns of male versus female students can be determined by producing the curriculum matrix first with only male students included and then with only female students. In fact, any variable may be substituted for the student major/ student level, department/course level categories traditionally shown in the curriculum matrix.

The Transition Probabilities (See Figures 6, 9) from the student flow calculation have substantial utility also. For example, by running the student flow calculation "backwards" a retention study can be conducted. A backwards run is constructed by designating the more recent term the "from" term and the more distant term the "to" term. In this configuration students who are not enrolled in the more recent term, but who were enrolled in the more distant term are defined as exiting students. In this mode one can determine which student majors and student levels within student majors have higher or lower

attrition rates. Transition probabilities for several years can be compared from like term to like term in order to highlight trends in student major changes. For example, if students are switching out of the department's majors into other degree programs, further analysis could be conducted to determine the reason and take necessary corrective action where appropriate.

This data can also be used for finanical planning. If productivity ratios (average credit hours produced per FTE faculty member) are known, staffing levels can be projected by department then multiplied by average salary to project departmental faculty salary needs. Other components of departmental expenditures can be projected as a function either of credit hours, headcount students, FTE faculty or headcount faculty, or student credit hours.[1]

The above applications are illustrative and not intended to be exhaustive of potential uses. Undoubtedly, each institution and users within each institution will find new and creative users of the data and utility. Indeed, mere perusal of the reports and attempts to explain unexpected relationships are sufficient to justify the exercise.

[1]Calculations like these are handled by the NCHEMS Resource Requirements Prediction Model (RRPM 1.6). In effect, the headcount projections coming from the system described herein produce more accurate and realistic RRPM input than heretofore has been possible.

CONCEPTUAL BASE AND SAMPLE CALCULATIONS

A. CONCEPTUAL BASE:

The underlying conceptual framework for this Student Flow System is the Markov Process. The Markov model was chosen because of its conceptual simplicity and because among all the curve fitting methods for projecting student enrollments (See Wing, 1974) it best replicates the real world student flow process. A Markov process is a stochastic process in which the transition probabilities depend upon the preceeding state or event. As applied to university student flow modeling this means simply that the probability of a student becoming a senior accounting major next autumn quarter is conditional on his/her student major/level state in the current autumn quarter. These probabilities are estimated from his/her state in the previous autumn quarter, etc. Transition probabilities in the Markov process are calculated from each individual student rather than by groups of students as in the cohort survival method.

The Markov model is superior to the cohort survival method of student flow modeling because it does not rely on sampling a segment of the population (cohort) and extrapolating the results to the entire population. The Markov model does, however, share with the cohort survival method the universal weakness of curve fitting techniques. Namely, it relies solely on historical data to construct the transition probability matrix. Thus,

implicity, the model assumes that future transition rates will be similar to past transition rates, at least through the time period being forecast. This assumption may lead to significant projection errors, especially as curricular requirements change or as the composition of the student body evolves. However, as will be shown later, ample provision has been made for modification of historically generated transition probabilities to reflect anticipated future changes in curricular requirements, student preferences, etc.

B. SAMPLE CALCULATION

This section describes the processing flow of individual student records required to produce projected departmental workloads. With this software, historical transition probabilities are calculated from individual student records and are then multiplied by the most recent term's headcounts. The results are projected headcount majors which are multiplied through the columns of the historical or projected headcount Curriculum Matrix producing a projected Instructional Work Load Matrix (IWLM). The row totals of the IWLM are the projected departmental student credit hour workloads. The following sample calculation will make this process more clear.

The first step is to calculate historical transition probabilities from individual student records from two semesters or terms. The calculation follows a two-step process, as illustrated in Figure 4. The first step is to build a headcount matrix that simply counts the number of students in each transition category. For example, the number of students in major A in 1978 who were in major B in 1977; the number of students in major A in 1978 that were not enrolled in 1977; or the number of students in major A in 1977 who were not enrolled in 1978. The second step is to divide the headcounts

by the column totals to estimate the transition percentages (or probabilities). Notice that this calculation gives transition rate estimates for exiting students and a prediction of the distribution of entering students, as well as an estimate of the flow percentages between majors.

The next step of the calculations is to use these transition rates as a predictor of future enrollments. This process is illustrated in Figure 5. The most recent year's enrollment is used along with an estimate of the number of new students expected. These are then multiplied by the transition percentages from Figure 4 to produce an estimate of the headcount enrollment by major. Thus, projected fall 1979 type A major headcount is 870 (900 x .4 + 1,000 x .1 + 1,000 x .1 + 1,100 x .1 + 1,000 x .2).

FIGURE 4
CALCULATION OF TRANSITION PERCENTAGES
FROM HISTORICAL DATA

HEADCOUNT MATRIX OF STUDENTS IN
TWO TIME PERIODS:

		FALL 1977					
		MAJOR A	MAJOR B	MAJOR C	MAJOR D	ENTERING STUDENTS (NOT ENROLLED 1977)	TOTAL 1978 STUDENTS
FALL 1978	MAJOR A	400	100	100	100	200	900
	MAJOR B	100	400	100	150	250	1,000
	MAJOR C	200	150	350	100	200	1,000
	MAJOR D	50	150	200	350	350	1,100
	EXITING STUDENTS (NOT ENROLLED IN 1978)	250	200	250	300		1,000
	TOTAL 1977 STUDENTS	1,000	1,000	1,000	1,000	1,000	

FIGURE 4 (CONTINUED)
CALCULATION OF TRANSITION PERCENTAGES
FROM HISTORICAL DATA

TRANSITIONAL PROBABILITY MATRIX,
(HEADCOUNT MATRIX DIVIDED
BY COLUMN TOTALS):

	MAJOR A	MAJOR B	MAJOR C	MAJOR D	ENTERING STUDENTS
MAJOR A	.40	.10	.10	.10	.20
MAJOR B	.10	.40	.10	.15	.25
MAJOR C	.20	.15	.35	.10	.20
MAJOR D	.05	.15	.20	.35	.35
EXITING STUDENTS	.25	.20	.25	.30	

FIGURE 5

SAMPLE CALCULATION OF DEPARTMENT WORKLOADS

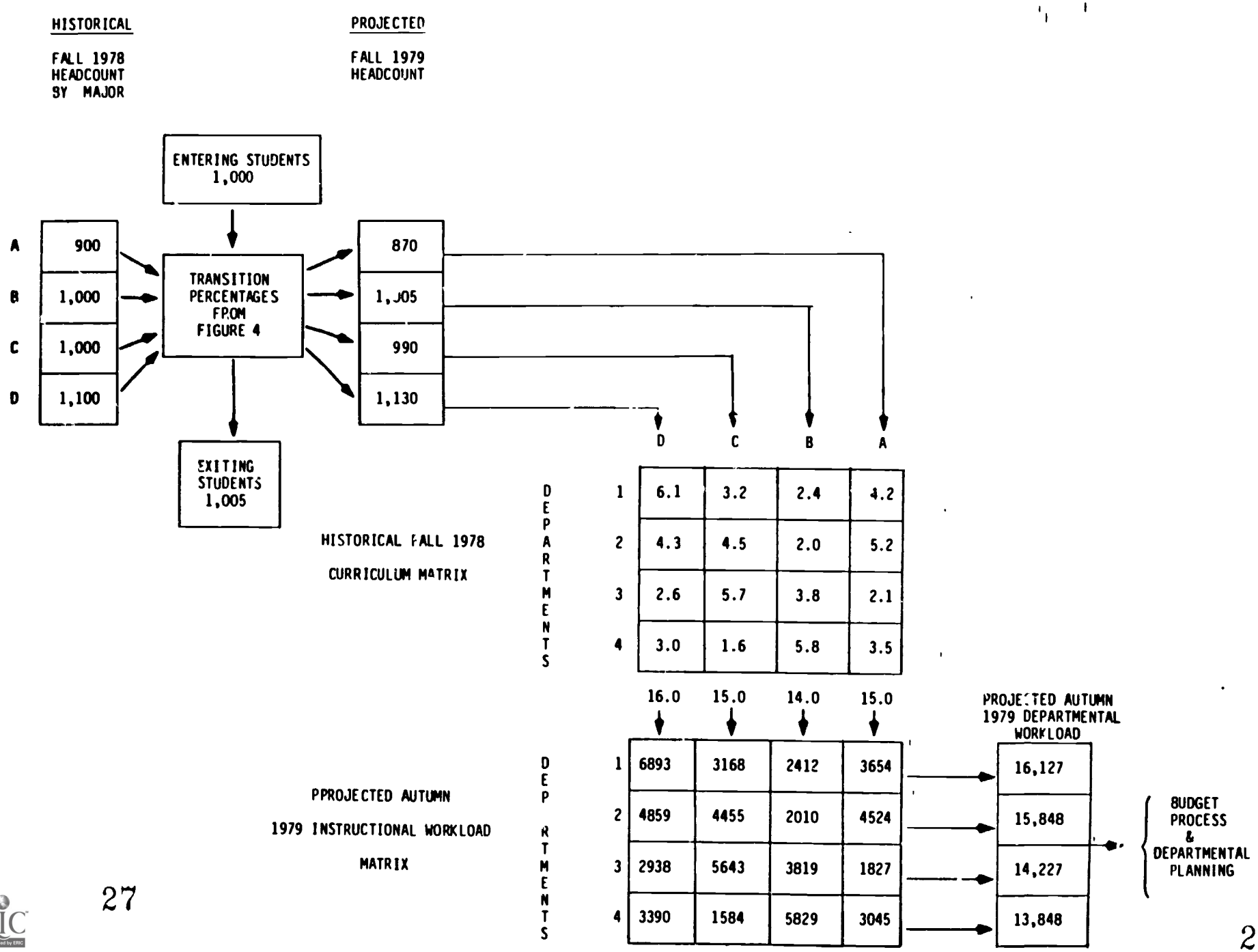

These projected headcount majors are then multiplied through the columns of the curriculum matrix, producing an Instruction Work Load Matrix (IWLM). The Autumn 1978 historical curriculum matrix shows in Autumn 1978 that the average Type A headcount major took 4.2 credit hours from department 1. Since we project 870 Autumn 1979 Type A headcount majors, we project the resulting workload induced on Department 1 will be 3,654 (870 x 4.2). Similarly, the 1,005 projected Type B majors will take, on the average, 2.4 credit hours from department 1, resulting in 2,412 projected credit hours. Similar calculations for all cells of the curriculum matrix complete the instructional workload matrix.

Finally, by summing the rows of the IWLM, we obtain projected Autumn 1979 departmental workloads and credit hours. In the sample calculation, projected credit hours are:

1. 16,127
2. 15,848
3. 14,227
4. 13,848

The computer software necessary to produce these results is in the public domain and available from NCHEMS at the cost of duplication.[2] The techniques have been proven through implementation at many institutions of higher education and are regarded to be of substantial value in planning, budgeting and management.

[2]The software used is derived from NCHEMS Costing and Data Management System (CADMS) and is more fully described in Chapter III.

CHAPTER II
TECHNICAL CONSIDERATIONS

DATA REQUIREMENTS

In this section we will discuss the inputs required and the outputs produced from each step of the process described in the above sample calculation.

A. TRANSITION PROBABILITIES:

The student flow calculations described in Chapter I are produced by the Student Data Module (SDM) of the NCHEMS Costing and Data Management System (CADMS) utilizing term by term student specific data to calculate transition probabilities. Individual student records are read for the sending (from) and receiving (to) terms. When a student ID number, usually a Social Security Number, is found on both the sending and receiving term files, a match is made and the sending and receiving state (MAJOR/LEVEL) combinations are noted. If a student ID is present only in the sending term the student is assumed to have exited the system. Conversely, if an ID is only present in the receiving term the student is assumed to have entered in that term. Transition probabilities for present, as well as for entering and exiting students, are calculated. A transition probability matrix (See Figure 6) is developed from the individual

FIGURE 6

```
FLO-03          T H E   O H I O   S T A T E   U N I V E R S I T Y          PAGE  29
STU FLOW                SENDING TERM TO RECEIVING TERM                     10/02/80
                              (SDM-ACTI=MAJ.)

                                                          AMOUNT     FLOW   CUM FLOW
     05   .3JR                        JUNIOR                  1     .0017     .9862
     05   .4SR                        SENIOR                  1     .0017     .9879
     07   .LDV SOC&BEH SCI MAJ        LOWER DIVISION          1     .0017     .9896
     11   .LDV AG&HOME EC MAJOR                               1     .0017     .9913
     14   .LDV ENGINEERING MAJR                               1     .0017     .9930
     14   .4SR                        SENIOR                  1     .0017     .9947
     42   .3JR ACAD AFF MAJORS        JUNIOR                  1     .0017     .9964
     44   .LDV EDUC SERV MAJORS       LOWER DIVISION          1     .0017     .9981
     60   .3JR CAP- ADM MAJORS        JUNIOR                  1     .0017     .9998
* TOTAL *                                  .585.00=ENRL     585      FLOW=AMT/ENRL

10   .3JR ADM SCI MAJORS    JUNIOR
     10   .4SR ADM SCI MAJORS         SENIOR                777     .6206     .6206
     EXIT.3JR EXITING STUDENTS        JUNIOR                297     .2372     .8578
     10   .3JR ADM SCI MAJORS                               127     .1014     .9592
     10   .7MA                        MASTERS                 6     .0048     .9640
     14   .4SR ENGINEERING MAJR       SENIOR                  6     .0048     .9688
     07   .4SR SOC&BEH SCI MAJ                                5     .0040     .9728
     12   .3JR EDUCATION MAJORS       JUNIOR                  5     .0040     .9768
     11   .4SR AG&HOME EC MAJOR       SENIOR                  4     .0032     .9800
     05   .4SR HUMANITIES MAJOR                               3     .0024     .9824
     07   .3JR SOC&BEH SCI MAJ        JUNIOR                  3     .0024     .9848
     23   .6PR LAW MAJORS             PROFESSIONAL            3     .0024     .9872
     00   .4SR UNDECIDED MAJORS       SENIOR                  2     .0016     .9888
     10   .LDV ADM SCI MAJORS         LOWER DIVISION          2     .0016     .9904
     21   .6PR DENTISTRY MAJORS       PROFESSIONAL            2     .0016     .9920
     60   .4SR CAP- ADM MAJORS        SENIOR                  2     .0016     .9936
     00   .3JR UNDECIDED MAJORS       JUNIOR                  1     .0008     .9944
     02   .4SR ARTS MAJORS            SENIOR                  1     .0008     .9952
     07   .7MA SOC&BEH SCI MAJ        MASTERS                 1     .0008     .9960
     10   .5OT ADM SCI MAJORS         OTHER UG                1     .0008     .9968
     11   .3JR AG&HOME EC MAJOR       JUNIOR                  1     .0008     .9976
     14   .3JR ENGINEERING MAJR                               1     .0008     .9984
     44   .3JR EDUC SERV MAJORS                               1     .0008     .9992
     66   .4SR CAP- ENG MAJORS        SENIOR                  1     .0008    1.0000
* TOTAL *                                 1,252.00=ENRL   1,252      FLOW=AMT/ENRL

10   .4SR ADM SCI MAJORS    SENIOR
     EXIT.4SR EXITING STUDENTS        SENIOR              1,277     .8021     .8021
     10   .4SR ADM SCI MAJORS                               230     .1445     .9466
     10   .7MA                        MASTERS                33     .0207     .9673
     44   .5OT EDUC SERV MAJORS       OTHER UG               13     .0082     .9755
     10   .5OT ADM SCI MAJORS                                11     .0069     .9824
     23   .6PR LAW MAJORS             PROFESSIONAL            7     .0044     .9868
     07   .4SR SOC&BEH SCI MAJ        SENIOR                  4     .0025     .9893
     14   .4SR ENGINEERING MAJR                               4     .0025     .9918
     10   .8DR ADM SCI MAJORS         DOCTORAL                2     .0013     .9931
```

student record matches showing the percentage of students in a given state in the sending term who transited to a given state in the receiving term. An example of a transition probability matrix is given in Figure 6. In this example there are 1,252 junior Administrative Science majors in the sending term. Of these, 777 (62.06%) have become senior Administrative Science majors in the receiving term. 297 (23.72%) were not enrolled (exited) and 127 (10.14%) were still junior Administrative Science majors. The data elements required to calculate transition probabilities are:

1. Student Major
2. Student Level
3. Student ID
4. Term/Year

THE CURRICULUM MATRIX

The curriculum matrix, also known as the induced course load matrix, describes, in credit hours, the relationship between student majors who take courses and departments that offer courses. Specifically, the curriculum matrix shows the average number of credit hours students of a given major and level take from various departments and instruction levels within departments. The curriculum matrix is constructed by reading individual student records for a single term. Required data elements are:

FIGURE 7

FLO-03 ICLM RUN

O S U C U R R I C U L U M M A T R I X

STUDENT MAJOR TO DISCIPLINE
(SDM-ACTI=AU79)

			AMOUNT	ICLM	CUM ICLM
140	ECONOMICS	**********			
0762	ECONOMICS	**********	1,452	.4740	.4740
1014	ACCOUNTING		182	.0594	.5334
1043	MANAGEMENT SCI		133	.0434	.5768
0537	ENGLISH		116	.0379	.6147
0584	ROMANCE LANGUAGE		116	.0379	.6526
0671	MATH		116	.0379	.6905
0557	HISTORY		95	.0310	.7215
1035	FINANCE		84	.0274	.7489
1435	COMPUTER INF SCI		54	.0176	.7665
0684	PHYSICS		50	.0163	.7828
0733	GEOGRAPHY		50	.0163	.7991
0694	STATISTICS		44	.0144	.8135
0614	ASTRONOMY		40	.0131	.8266
1050	MARKETING		36	.0118	.8384
0755	POLITICAL SCI		35	.0114	.8498
0509	CLASSICS		30	.0098	.8596
1265	HEALTH PHYS EDUC		28	.0091	.8687
0766	PSYCHOLOGY		26	.0085	.8772
0300	BIOLOGICAL SCI		25	.0082	.8854
0547	GERMAN		25	.0082	.8936
0575	PHILOSOPHY		25	.0082	.9018
0711	ANTHROPOLOGY		25	.0082	.9100
0777	SOCIOLOGY		23	.0075	.9175
0788	COMMUNICATION		23	.0075	.9250
1030	COL OF ADM SCI		22	.0072	.9322
0280	THEATRE		20	.0065	.9387
0971	NEWARK CAMPUS		18	.0059	.9446
0502	BLACK STUDIES		15	.0049	.9495
0593	SLAVIC LANGUAGES		15	.0049	.9544
1465	INDUST SYSTM ENG		14	.0046	.9590
0956	MARION CAMPUS		13	.0042	.9632
0554	HEBREW		10	.0033	.9665
0656	GEOLOGY & MINERL		10	.0033	.9698
0628	CHEMISTRY		9	.0029	.9727
1485	PHOTO & CINEMA		8	.0026	.9753
1415	AVIATION		6	.0020	.9773
2580	PREVENTIVE MED		6	.0020	.9793
4470	MILITARY SCIENCE		6	.0020	.9813
0310	BIOCHEMISTRY		5	.0016	.9829
0350	MICROBIOLOGY		5	.0016	.9845
0360	BOTANY		5	.0016	.9861
0390	ZOOLOGY		5	.0016	.9877
0518	COMPARATIVE LANG		5	.0016	.9893
0660	MATH & PHYS SCI		5	.0016	.9909
1114	AGRI ECONOMICS		5	.0016	.9925
3020	MERSHON CENTER		5	.0016	.9941
4235	INTERNTL STUDIES		5	.0016	.9957
0262	MUSIC		4	.0013	.9970
0215	ART		3	.0010	.9980
1220	EDUCATION ADM		3	.0010	.9990
1230	EXCEPTL CHILDREN		3	.0010	1.0000
* TOTAL *		3,063.00=ENRL	3,063	ICLM=AMT/ENRL	

1. Student ID (for headcount curriculum matrix)
2. Student Major
3. Student Level.
4. Department/discipline offering the course
5. Course level
6. Credit hours
7. Term/Year

The total number of credit hours taken by each student type (column) is accumulated in the matrix at the intersection of the department (row) offering the courses. These accumulated credit hours constitute the historical instructional workload matrix. The curriculum matrix is constructed by dividing the columns of the historical instructional work load matrix by the number of student majors in each column.

The sample curriculum matrix Credit Hours Taken Report in Figure 7 shows that all economics majors took 3,063 credit hours. Of these 1,452 (47.40%) were taken in economics courses, 182 (5.94%) were taken in accounting courses, 4.34% were taken in management, etc.

Figure 8, a curriculum matrix Credit Hours Taught Report, shows that the Entomlogy Department taught 1,185 credit hours. Of these, 517 (43.63%) were taken by Entomology students 108 by Agronomy students, 79 by Horticulture students, etc.

FIGURE 8

FLO-03 O S U C U R R I C U L U M M A T R I X PAGE 25
ICLM RUN DISCIPLINE TO STUDENT MAJOR 10/13/80
(SOM-ACTI=AU79)

			AMOUNT	ICLM	CUM ICLM
0330	ENTOMOLOGY	**********			
183	ENTOMOLOGY	**********	517	.4363	.4363
042	AGRONOMY		108	.0911	.5274
225	HORTICULTURE		79	.0667	.5941
025	AGR EDUCATION		68	.0574	.6515
075	BIOLOGY		38	.0321	.6836
445	ZOOLOGY		37	.0312	.7148
000	UNDECIDED		36	.0304	.7452
392	PLANT PATHOLOGY		34	.0287	.7739
184	ENVIRON BIOLOGY		25	.0211	.7950
603	CONTINUING EDUC		24	.0203	.8153
055	ANIMAL SCIENCE		23	.0194	.8347
285	MICROBIOLOGY		19	.0160	.8507
584	WILDLIFE MGT		16	.0135	.8642
580	ENVIRON INTERPRT		14	.0118	.8760
125	DAIRY SCIENCE		13	.0110	.8870
060	ANTHROPOLOGY		11	.0093	.8963
255	LANDSCAPE ARCH		11	.0093	.9056
181	ENGLISH		10	.0084	.9140
840	CAP- ENGINEERING		10	.0084	.9224
604	BIO SCI EDUC		8	.0068	.9292
805	CAP- ADMIN SCI		8	.0068	.9360
420	PSYCHOLOGY		6	.0051	.9411
033	AGR MECH & SYS		5	.0042	.9453
080	BOTANY		5	.0042	.9495
163	EDUC: SCI & MATH		5	.0042	.9537
205	GEOLOGY & MINERL		5	.0042	.9579
405	POULTRY SCIENCE		5	.0042	.9621
450	SPANISH		5	.0042	.9663
586	DRAW/PAINT/GRAPH		5	.0042	.9705
649	HONORS		5	.0042	.9747
810	CAP- AGRICULTURE		5	.0042	.9789
835	CAP- EDUCATION		5	.0042	.9831
990	CAP- VET MED		5	.0042	.9873
020	AG ECON & R SOCL		3	.0025	.9898
105	CIVIL ENGINEER		3	.0025	.9923
465	THEATER		3	.0025	.9948
576	FISHERIES MGT		3	.0025	.9973
956	CAP- MEDICINE		3	.0025	.9998
* TOTAL *			1,185	ICLM=AMT/TOTL	

VALIDATION

The historical data technique is recommended for validating the model discussed in this document. This means, simply, that the user should satisfy himself/herself as to the accuracy of the predicted results of the model prior to relying on it for decision making and planning. Numerous considerations are involved designing a testing strategy. First, the level of aggregation must be determined. In general, the model should be validated using the least aggregate level of detail that will be used for planning and decision making purposes. This will usually be, at least initially, at the department level.

Second, the question of whether to select a sample of departments or include all departments in the validation analysis must be answered. Again, since the possibility of undetected errors arises when using samples we recommend the user examine every department in the validation.

Third, the number of years to be validated prior to acceptance of the model must be determined. Assuming analytical, computer, and data resources are available, a three year validation scheme is recommended. The law of diminishing returns sets in for validations beyond three years since relationships within the curriculum matrix and student's propensity to transfer from state to state in the transition matrix probably become more dissimilar as the data become older.

Finally, acceptable standards of accuracy must be determined. This, of course, depends upon the ultimate use of the data and the environment in which it is used. Generally, however, an accuracy level of ± 1 percent for the total institution and ± 5 percent for individual colleges or schools seems appropriate. There are special cases, of course, where these somewhat arbitrary upper and lower bounds of acceptability would not apply. This is particularly true in the case of a small discipline or department where a relatively small change in absolute numbers could produce a large percentage change. Each institution's unique environment will dictate required levels of accuracy.

Once answers to the above questions have been determined and agreed upon the validation process is a relatively simple one. First, the model is run using historical data to "predict" credit hour workloads for an academic term which has already passed. Comparisons are made between actual and "predicted" values and differences are noted. If ± 5 percent is the acceptable tolerance limit and certain organizational units fall beyond these limits further analysis must be conducted to determine the reason why. Differences between actual and predicted values simply indicate, by definition, that either a change occurred in the curriculum matrix or a change occurred in the transition probability matrix or the base headcount student count was in error. Thus, analysis of the differences must begin with these components of the model.

The amount of the variability between predicted and actual values attributable to either the curriculm matrix or the transition probability matrix can be determined easily. This is accomplished by substituting either the actual curriculum matrix or the actual transition probability matrix for the forecast curriculum or transition probability matrices. For example, if the actual transition probability matrix were substituted for the forecast transition probability matrix, any resulting differences between actual and predicted values would be attribuable solely to differences between actual and predicted curriculum matrices. Thus, by substituting, one at a time, the actual curriculum matrtix or the actual transition probability matrix the user can readily determine the quantity of difference associated with either matrix. Obviously, the matrix with the larger difference will be the starting point for analysis.

Changes in the curriculum matrix can reflect changing student demand for particular courses. These tend to be gradual over time and are usually not fruitful ground for explaining wide fluctuations in predicted results. However, administratively induced changes in the curriculum matrix can happen suddenly and are possible explanations for wide fluctuations in predicted results. Happily, these administratively induced changes are predictable and can be corrected prior to running the model. Examples of these types of changes are curricular modifications

requiring students to take courses in disciplines previously not required. Also, capacity factors can be involved, e.g., doubling the number of drafting tables in Engineering or Design Departments.

The predicted and actual transition probability matrices and curriculum matrics are very easy to compare side by side. This is true if the reports are sorted by flow percent since the top three to five lines of each department will cumulatively account for 80-95 percent of all students. Thus, only a very small portion of the substantial printout generated from the model will need to be analyzed to explain the differencess between predicted and actual values. Usually, the most common explainer for inaccuracies in either the curriculum matrix or the transition probability matrix is a small number of students in the base period. As noted before, a small absolute change can result in relatively large percentage changes. Where this occurs, the user should either attempt to collapse the small departments into other larger related departments or be prepared to give special detailed analysis to these departments each time the model is run.

Finally, the user should be cognizant of the relevance of the trend in student credit hours per headcount student. If, as has been the case in recent years, students take fewer credit hours each succeeding year, workloads will be overprojected. This occurs because the average number of credit hours shown in the projected curriculum matrix will be slightly overstated. Therefore, the user should not be surprised to see consistantly overprojected workloads during the validation process. Conversely, if the number of credit hours per head count student is increasing, department workloads will be underprojected.

IMPLEMENTATION CONSIDERATIONS

This section contains discussion of several important factors the user should address during the implementation process. These include both data and design questions.

A. MATRIX STABILITY

Previous discussions in this document have not distinguished between historical and projected curriculum matrices and between historical and projected transition probability matrices. Clearly, there must be a difference between the future and the past. If there were none the future would be identical to the past and there would be no need for forecasting, or simulation modeling. This brings up the question of modifying the curriculum matrix and transition probability matrix to reflect known or probable changes in the future which are not contained in historical data. As mentioned in the section on Validation, administratively induced curricular requirements changes or capacity changes can be an immediate indicator of need for change in the curriculum matrix. Using capacity change as an example, if we know the number of seats in an art studio has been increased by 200% and course demand has always exceeded course supply, we could make a legitmate assumption that the relevant cell of the curriculum matrix will be changed in succeeding quarters.

Likewise, predictably necessary changes to the transition probability Matrix can be apparent due to changes in the university's mode of operation. For example, if performance standards are increased or curricula are made more difficult one might assume the propensity of students to leave the university in academic difficulty would increase, thus increasing the number of exiting students. Also, if, as the competition for students increases the institution begins to recruit students who are academically less prepared for college work, lower retention rates may be expected.

The important point to be remembered is that the curriculum matrix and transition probability matrix will change over time. As this occurs the alert researcher will, through informed opinion, questionnaires, analysis, etc., make estimates of these changes and incorporate them into the projection process. The types of changes that are likely to occur at a given institution will become clear as the researcher tracks down the differences between projected and actual values during the validation process discussed above.

B. DATA ACCURACY

Analysts are frequently and rightly concerned about the accuracy of the data from which forecasts are made. More

important, however, for projection purposes is the consistency with which data are collected and coded. Thus, the accuracy of a projection of the number of credit hours to be taught in the History Department would not be adversly affected if all English students had been consistently coded as History students in the source data from which the transition probability matrix and the curriculum matrix were constructed and if all English students were consistently coded as History students in the projection period. Clearly a more desirable situation, however, would be to have the major code for all students be accurately recorded and utilized in the system. This is a necessary condition for accurate headcount projections by major. Since well used data tends to be high quality data, coding errors will work themselves out of the system as the data elements contained therein are used more frequently.

C. BASE PERIOD SELECTION

The user must determine which base period to use for projection purposes, i.e., Should the projected transition probability matrix be based on the most recent year, the average of the most recent three years, the weighted average of the most recent three years, etc? The answer to these questions is almost always that the most recent time period best reflects the future and should be used, therefore, as the base for projection purposes. Intuitively, students' demand for courses in Autumn Quarter 1980, would be more

similar to students' demand for courses in Autumn Quarter 1979 than in Autumn Quarter 1976. Since much can be learned through analysis associated with rediscovery of this wheel, the user is encouraged, time permitting, to investigate and emperically determine which year or combination of years produces the best projection results.

A related, but somewhat different concern, is which base academic period is best for projecting a given term. Should an autumn quarter be projected from an earlier autumn quarter curriculum matrix and previous autumn to autumn transition probability matrix or could one project autumn quarter credit hour demands by first projecting headcount enrollments from a spring to autumn transition probability matrix and then project departmental workload by multiplying the projected headcounts through an autumn CM. Since, invariably, the most recent term is more likely to reflect future demand and transition patterns the spring to autumn transition probability matrix is likely to give good results. It is at least worth comparing its accuracy with the autumn to autumn methodology described above. One note of caution: In the spring to autumn alternative the number of entering autumn students must be adjusted to reflect new students who entered during the summer quarter.

The user should be aware that entering students are defined by the system as students who were not present in the sending term but who were present in the receiving term. Furthermore, unless it is overridden, the system as described in this document assumes that this year's count of entering students will be equal to last year's count. Therefore, in the likely event this is not the case, the user should override this step so that the number of entering students for the projection period will more accurately reflect reality.

D. COST/TIME

The underlying assumptions that support the techniques described in this document are not new. Markov Student Flow Modeling, transition probability, and curriculum matrices have been in use in institutions of higher education for many years. Now, for the first time, however, well promulgated, well documented, public domain software is available to reduce greatly the cost of projecting headcount enrollments, as well as departmental workloads.

The cost of and time required for implementation will vary from institution to institution depending upon the institution's starting point. The institution that has adequate historical data, as well as substantial experience with the NCHEMS Costing and Data Management System will be able to produce the results described in this document with one

person month and $1,500 of computer time. On the other hand, an institution which has adequate data and no experience with the NCHEMS Costing and Data Management System will need to learn this system prior to implementation. This learning process can be substantially short-cut through involvement of the NCHEMS Direct Assistance Network. The CADMS has so many options and is so flexible that it is sometimes difficult for the new user to determine which option is appropriate for a given situation and to determine which path to take through the first successful run of the software. Therefore, we strongly recommend that the new CADMS user, as well as perhaps experienced CADMS users, avail themselves of the services offered by the Direct Assistance Network.

E. ENHANCED SOFTWARE:

The user is also strongly encouraged to employ the enhanced version of CADMS described in this document as opposed to the original version of CADMS which has been distributed between 1975 and 1980. The original version was designed to support cost analysis, the Resource Requirements Prediction Model and Information Exchange Procedures. It is flexible enough as it stands to handle also the Student Flow Model application described in this document. However, the printed outputs are extremely difficult to read in the student flow environment.

All sample outputs shown in this document are from the enhanced version. This replacement software is available from NCHEMS at the cost of duplication.

SAMPLE REPORTS

This section contains sample output reports for the transition probability matrix of the Student Flow Model (Figure 9); the projected headcount enrollments report of the Student Flow Model (Figure 10); the Detailed Projected Credit Hour Workload by Department Report of the Student Flow Model (Figure 11); The Summary Projected Credit Hour Report of the Student Flow Model (Figure 12); a Curriculum Matrix (Figures 13 and 14). All of the reports described in this section are produced from the enhanced version of the CADMS software. The enhanced version is decribed in the technical implementation chapter and is strongly recommended because of its greatly improved readability and user orientation. The circled numbers in the following text relate to circled numbers on the referenced printout.

A. HISTORICAL TRANSITION REPORT - Figure 9

(1) indicates the sending and receiving time periods. In this case the flow of students is from "sending" Autumn 1977 to "receiving" Autumn 1978. (2) is the sending major code (06). (3) is the sending major name (Math and Physical Sciences). (4) indicates the level code of student majors for the Autumn 1977 sending term (3-Jr.) (5) is the number

FIGURE 9

```
FLU-03          T H E   O H I O   S T A T E   U N I V E R S I T Y          PAGE 14
STU FLOW                AUTUMN 1977 TO AUTUMN 1978                          02/05/80
                                (SUM-ACTI-MAJ.)

                                                                  AMOUNT   FLOW   CUM FLOW
  06   .3JR MATHGPHY SCI MAJ JUNIOR
       06   .4SR MATHGPHY SCI MAJ SENIOR                            67     .5317   .5317
       EXIT.3JR EXITING STUDENTS JUNIOR                             20     .1587   .6904
       06   .3JR MATHGPHY SCI MAJ                                   17     .1349   .8253
       14   .4SR ENGINEERING MAJOR SENIOR                            6     .0476   .8729
       03   .4SR BIO SCI MAJORS                                      4     .0317   .9046
       10   .4SR ADM SCI MAJORS                                      3     .0238   .9284
       05   .4SR HUMANITIES MAJOR                                    2     .0159   .9443
       00   .3JR UNDECIDED MAJORS JUNIOR                             1     .0079   .9522
       06   .7MA MATHGPHY SCI MAJ MASTERS                            1     .0079   .9601
       07   .4SR SOCGBEH SCI MAJ  SENIOR                             1     .0079   .9680
       12   .3JR EDUCATION MAJORS JUNIOR                             1     .0079   .9759
       14   .3JR ENGINEERING MAJOR                                   1     .0079   .9838
       14   .7MA                  MASTERS                            1     .0079   .9917
       42   .3JR ACAD AFF MAJORS  JUNIOR                             1     .0079   .9996
  * TOTAL *                          126.00=ENRL                   126     FLOW=AMT/ENRL

  06   .4SR MATHGPHY SCI MAJ SENIOR
       EXIT.4SR EXITING STUDENTS SENIOR                             80     .4848   .4848
       06   .4SR MATHGPHY SCI MAJ                                   44     .2667   .7515
       06   .7MA                  MASTERS                           14     .0848   .8363
       06   .8DR                  DOCTORAL                           5     .0303   .8666
       14   .7MA ENGINEERING MAJOR MASTERS                           3     .0182   .8848
       03   .4SR BIO SCI MAJORS   SENIOR                             2     .0121   .8969
       06   .5OT MATHGPHY SCI MAJ OTHER UG                           2     .0121   .9090
       14   .4SR ENGINEERING MAJOR SENIOR                            2     .0121   .9211
       25   .6PR MEDICINE MAJORS  PROFESSIONAL                       2     .0121   .9332
       44   .5OT EDUC SERV MAJORS OTHER UG                           2     .0121   .9453
       00   .3JR UNDECIDED MAJORS JUNIOR                             1     .0061   .9514
       00   .4SR                  SENIOR                             1     .0061   .9575
       00   .6PR                  PROFESSIONAL                       1     .0061   .9636
       07   .4SR SOCGBEH SCI MAJ  SENIOR                             1     .0061   .9697
       10   .7MA ADM SCI MAJORS   MASTERS                            1     .0061   .9758
       11   .4SR AGRHUME LC MAJOR SENIOR                             1     .0061   .9819
       21   .6PR DENTISTRY MAJORS PROFESSIONAL                       1     .0061   .9880
       27   .6PR OPTOMETRY MAJORS                                    1     .0061   .9941
       44   .4SR EDUC SERV MAJORS SENIOR                             1     .0061  1.0002
  * TOTAL *                          165.00=ENRL                   165     FLOW=AMT/ENRL

  06   .5OT MATHGPHY SCI MAJ OTHER UG
       EXIT.5OT EXITING STUDENTS OTHER UG                            5     .3571   .3571
       06   .5OT MATHGPHY SCI MAJ                                   5     .3571   .7142
       06   .7MA                  MASTERS                           2     .1429   .8571
       06   .3JR                  JUNIOR                            1     .0714   .9285
       44   .5OT EDUC SERV MAJORS OTHER UG                          1     .0714   .9999
  * TOTAL *                          14.00=ENRL                    14     FLOW=AMT/ENRL
```

of Math and Physical Science students, Autumn 1977. (6) 67 is 53.17% of 126. This is the "flow" or transition probability. The value .5317 will be used later to project the flow of Autumn 1978 junior level Math and Physical Science majors to Autumn 1979 senior level Math and Physical Science majors. (7) is the cumulative transition probability through this row of the printout. (8) indicates the total number of junior level Math and Physical Science majors Autumn Quarter 1977.

B. PROJECTED HEADCOUNT ENROLLMENTS - Figure 10

(9) indicates the major level state being projected. In this case major 06 equals Math and Physical Sciences. The student level being projected is rank 4 which is senior.

(10) indicates the major level states from which students will transit in the sending term. (11) indicates that there were 129 junior Math and Physical Science students in Autumn 1978. (12) indicates that 53.17% of the 129 junior Math and Physical Science majors in Autumn Quarter of 1978 are projected to transit to senior Math and Physical Science majors in Autumn Quarter 1979 producing (13) 68.5893 projected Autumn 1979 headcount enrollments. (14) is the total projected headcount enrollment for Autumn Quarter 1979 senior level Math and Physical Science majors (150).

C. DETAILED DEPARTMENTAL WORKLOAD FORECAST REPORT - Figure 11

(15) is the department code (0656 = Geology and Mineralogy). (16) is the level of instruction (intermediate or upper division). (17) is student types by major who will take upper division Geology and Mineralogy courses. (18) is the level of students who will take upper division Geology and Mineralogy courses. (19) is the projected number of Autumn 1979 headcount students (See Item 14 on the Transition Probability Matrix Report). (20) is the average number of credit hours that senior level Math and Physical Science majors (major code 06) will take in upper division Geology and Mineralogy courses. This value comes from the Curriculum Matrix. (21) is the product of (19) and (20) and is the projected Autumn 1979 credit hour demand for upper division Geology and Mineralogy courses created by senior level Math and Physical Sciences majors. (22) is total projected Autumn 1979 credit hours for upper division Geology and Mineralogy courses.

D. SUMMARY PROJECTED CREDIT HOUR REPORT - Figure 12

(23) is projected credit hours by level of instruction for each department. (24) is projected credit hours for each department.

Figure 10

[redacted] TRANSITION REPORT

DMM-07
000002.02

RECEIVING	SENDING	BASE.ENKL.HU	TRANS PROBS	AU79.ENKL.HU
MAJ.06 .3JK	**TOTALS**			124.4660
MAJ.06 .4SK	MAJ.ENTR.4SK	341.0000	.0276	16.0136
	MAJ.00 .LUV	3,253.0000	.0006	2.0118
	MAJ.00 .3JK	215.0000	.0029	3.1824
	MAJ.03 .LUV	185.0000	.0041	.7585
	MAJ.03 .4SK	364.0000	.0074	2.6208
	MAJ.05 .4SK	304.0000	.0021	.9424
	MAJ.06 .LUV	88.0000	.0743	6.5560
	MAJ.06 .3JK	129.0000	.5317	68.5843
	MAJ.06 .4SK	153.0000	.2667	40.8051
	MAJ.07 .4SK	961.0000	.0010	.9610
	MAJ.11 .3JK	1,055.0000	.0004	.4445
	MAJ.12 .3JK	591.0000	.0021	1.2411
	MAJ.14 .LUV	1,059.0000	.0010	1.0590
	MAJ.14 .3JK	664.0000	.0021	2.0874
	MAJ.15 .3JK	140.0000	.0078	1.0140
	MAJ.6M .LUV	2,710.0000	.0004	1.0840
	MAJ.00 .3JK	26.0000	.0370	.9620
MAJ.06 .4SK	**TOTALS**			150.9379
MAJ.06 .5UI	MAJ.ENTR.5UI	2,662.0000	.0026	6.9212
	MAJ.03 .4SK	264.0000	.0024	.6336
	MAJ.05 .4SK	153.0000	.0121	1.8513
	MAJ.06 .5UI	15.0000	.3571	5.3565
MAJ.06 .5UI	**TOTALS**			15.0026
MAJ.06 .6PK	MAJ.ENTR.6PK	652.0000	.0015	.9780
	MAJ.06 .LUV	88.0000	.0106	.9328
	MAJ.06 .6PK	6.0000	.3000	1.8000
MAJ.06 .6PK	**TOTALS**			6.7108
MAJ.06 .7MA	MAJ.ENTR.7MA	2,972.0000	.0377	112.0444
	MAJ.00 .5UI	186.0000	.0014	1.1074
	MAJ.03 .4SK	264.0000	.0024	.6336
	MAJ.03 .7MA	125.0000	.0052	.6500
	MAJ.06 .LUV	68.0000	.0136	.9328
	MAJ.06 .3JK	129.0000	.0079	1.0191
	MAJ.06 .4SK	153.0000	.0848	12.9744
	MAJ.06 .5UI	15.0000	.1429	2.1435
	MAJ.06 .7MA	167.0000	.2486	40.3256
	MAJ.06 .6PK	353.0000	.0079	2.8787
	MAJ.06 .3JK	591.0000	.0001	.0591
	MAJ.06 .5UI	2,965.0000	.0006	.9258
MAJ.06 .7MA	**TOTALS**			182.2358
MAJ.06 .[illegible]	MAJ.[illegible]	1,629.0000	.0[illegible]	1[illegible].9892

9 10 11 12 13 14

Figure [illegible]

UMM-07
000001.06

THE [illegible]
PROGRAM UNIT COST [illegible]

PROGRAM	DISCIPLINE	[illegible]/CR	[illegible]	[illegible]
	MAJ.01 .SUI	[illegible]	[illegible]	[illegible]
	MAJ.01 .LDV	[illegible]	[illegible]	[illegible]
	MAJ.01 [illegible]	[illegible]	[illegible]	[illegible]
	MAJ.03 .LDV	[illegible]	[illegible]	[illegible]
	MAJ.03 .LDV	[illegible]	[illegible]	[illegible]
	MAJ.03 .SUI	[illegible]	[illegible]	[illegible]
	MAJ.06 .LDV	[illegible]	[illegible]	[illegible]
	MAJ.06 .LDV	[illegible]	[illegible]	[illegible]
	MAJ.06 .LDV	[illegible]	[illegible]	[illegible]
PRG.0000BAS	**TOTALS**	304.6749	14.[illegible]	[illegible]
PRG.0050INI	MAJ.03 .7MR	111.1714	.0001	.9666
	MAJ.03 .8DR	200.4[illegible]	.0040	.9491
	MAJ.03 .6DR	[illegible]	.0060	1.6704
	MAJ.06 .3DR	124.4660	.1550	19.2922
	MAJ.06 .4SR	150.8379	1.0324	155.9004
	MAJ.06 .5UI	15.0026	.0667	10.0022
	MAJ.06 .7MA	102.2384	1.6231	270.2034
	MAJ.06 .8DR	542.9749	.1370	74.3315
	MAJ.07 .6DR	588.7050	.0081	4.7085
	MAJ.11 .LDV	764.0054	.0063	4.8436
	MAJ.11 .3DR	950.4342	.0047	4.4670
	MAJ.11 .4SR	1,205.3493	.0082	9.9100
	MAJ.11 .7MA	385.4138	.0313	19.1711
	MAJ.11 .8DR	367.6785	.0218	8.0153
	MAJ.14 .3DR	1,055.4143	.0020	1.9054
	MAJ.14 .4SR	1,308.4016	.0016	2.1894
	MAJ.14 .5UI	142.7057	.0076	1.0845
	MAJ.14 .7MA	860.1341	.0126	.3179
	MAJ.14 .8DR	509.2099	.0021	1.0609
	MAJ.44 .5DT	1,577.1656	.0038	5.9932
PRG.0050INI	**TOTALS**	167.5364	3.7663	650.9923
PRG.0656PST	MAJ.05 .8DR	283.4042	.0099	2.8057
	MAJ.06 .7MA	102.2384	.0460	47.7464
	MAJ.06 .8DR	542.9749	.2777	150.7841
PRG.0656PST	**TOTALS**	366.3322	.5475	201.3362
PRG.0671BAS	MAJ.00 .LDV	3,486.0307	2.0534	7,158.2154
	MAJ.00 .3DR	608.1514	.5744	480.3624
	MAJ.00 .4SR	277.0505	.2273	62.9803
	MAJ.00 .5UI	794.2742	.4669	370.8460
	MAJ.02 .LDV	225.4013	.4740	106.2492
	MAJ.02 .3DR	206.7713	.3174	64.9005
	MAJ.02 .4SR	274.0521	.2569	70.4348
	MAJ.02 .5UI	39.1520	.2361	9.2120
	MAJ.02 .8DR	69.3105	.0266	5.0336

15 16 17 18 19 20 21 22

BEST COPY AVAILABLE

Figure 12

UMM-02
000001.07

THE UNIT STATE UNIVERSITY
PROJECTED CREDIT HRS

********** PARAMETER VERIFICATION ********

CENTER IDENT.	AU79.CR.HRUR
** SUB-TOTAL **	3,910.4467
PRG.0628BAS	19,916.5733
PRG.0628INT	1,526.4750
PRG.0628PST	1,976.8693
** SUB-TOTAL **	23,421.9102
PRG.0642INT	353.5061
PRG.0642PST	243.1222
** SUB-TOTAL **	626.6283
PRG.0656BAS	5,145.7612
PRG.0656INT	630.9923
PRG.0656PST	201.3362
** SUB-TOTAL **	5,976.1097
PRG.0671BAS	62,594.5603
PRG.0671INT	3,521.4694
PRG.0671PST	863.5485
** SUB-TOTAL **	66,983.4782
PRG.0684BAS	15,637.0343
PRG.0684INT	553.4491
PRG.0684PST	1,233.1967
** SUB-TOTAL **	17,433.6801
PRG.0694BAS	4,531.6691
PRG.0694INT	2,714.7871
PRG.0694PST	182.0575
** SUB-TOTAL **	7,428.5337
PRG.0711BAS	6,690.3129
PRG.0711INT	623.2525
PRG.0711PST	451.4800
** SUB-TOTAL **	7,765.0454
PRG.0722BAS	11,535.9082
PRG.0722INT	10,857.5556
PRG.0722PST	1,224.2752
** SUB-TOTAL **	23,617.8190
PRG.0733BAS	8,081.7165
PRG.0733INT	829.4576
PRG.0733PST	265.8496
** SUB-TOTAL **	9,781.0237
PRG.0744BAS	2,010.7552
PRG.0744INT	2,505.8896
PRG.0744PST	104.9760

23

24

42

CURRICULUM MATRIX

CREDIT HOURS TAKEN REPORT - Figure 13

(25) indicates this printout is an ICLM or Curriculum Matrix Report. (26) is the student major code. (27) is the student major name. (28) is the code for the department offering the course. (29) is the name of the department offering the course. (30) is the number of credit hours taken by Economics students in in each department. (31) is the percentage of all credit hours taken by Economics students in courses offered by each department. (32) is the cumulative percent of credit hours taken by Economics students. (33) is the total number of credit hours taken by Economics students. (34) indicates this is a Credit Hours Taken Report (i.e., student major to discipline.

CREDIT HOURS TAUGHT REPORT - Figure 14

(35) indicates this printout is an ICLM or CM report. (36) indicates this is a Credit Hours Taught Report (i.e., student discipline to major. (37) is the code for the department offering the courses. (38) is the name of the department offering the course. (39) are the codes for the student majors taking the courses. (40) are the names of the majors taking the courses. (41) is the number of credit hours taken by each major in Entomolody courses. (42) is the percentage of credit hours taken by the various majors in Entomology courses. (43) is the cumulative percentage. (44) is the total number of credit hours taught in the Entomology department.

Fig. 13

FLO-03 ICLM RUN (25)

O S U C U R R I C U L U M M A T R I X

STUDENT MAJOR TO DISCIPLINE (34)
(SDM-ACTI=AU79)

(26) 140 (27) ECONOMICS **********

		AMOUNT	FLO.	CUM FLO.
0722	ECONOMICS **********	1,452	.4740	.4740
1014	ACCOUNTING	192	.0594	.5334
1043	MANAGEMENT SCI	133	.0434	.5768
0537	ENGLISH	116	.0379	.6147
0584	ROMANCE LANGUAGE	116	.0379	.6526
0671	MATH	116	.0379	.6905
0557	HISTORY	95	.0310	.7215
1035	FINANCE	84	.0274	.7489
1435	COMPUTER INF SCI	54	.0176	.7665
0684	PHYSICS	50	.0163	.7828
0733	GEOGRAPHY	50	.0163	.7991
0694	STATISTICS	44	.0144	.8135
0614	ASTRONOMY	40	.0131	.8266
1050	MARKETING	36	.0118	.8384
0755	POLITICAL SCI	35	.0114	.8498
0509	CLASSICS	30	.0098	.8596
1265	HEALTH PHYS EDUC	28	.0091	.8687
0766	PSYCHOLOGY	26	.0085	.8772
0300	BIOLOGICAL SCI	25	.0082	.8854
0547	GERMAN	25	.0082	.8936
0575	PHILOSOPHY	25	.0082	.9018
0711	ANTHROPOLOGY	25	.0082	.9100
0777	SOCIOLOGY	23	.0075	.9175
0788	COMMUNICATION	23	.0075	.9250
1000	COL OF ADM SCI	22	.0072	.9322
0280	THEATRE	20	.0065	.9387
0971	NEWARK CAMPUS	18	.0059	.9446
0502	BLACK STUDIES	15	.0049	.9495
0593	SLAVIC LANGUAGES	15	.0049	.9544
1465	INDUST SYSTM ENG	14	.0046	.9590
0956	MARION CAMPUS	13	.0042	.9632
0554	HEBREW	10	.0033	.9665
0656	GEOLOGY & MINERL	10	.0033	.9698
0628	CHEMISTRY	9	.0029	.9727
1485	PHOTO & CINEMA	8	.0026	.9753
1415	AVIATION	6	.0020	.9773
2580	PREVENTIVE MED	6	.0020	.9793
4470	MILITARY SCIENCE	6	.0020	.9813
0310	BIOCHEMISTRY	5	.0016	.9829
0350	MICROBIOLOGY	5	.0016	.9845
0380	BOTANY	5	.0016	.9861
0390	ZOOLOGY	5	.0016	.9877
0518	COMPARATIVE LANG	5	.0016	.9893
0600	MATH & PHYS SCI	5	.0016	.9909
1114	AGRI ECONOMICS	5	.0016	.9925
3020	MERSHON CENTER	5	.0016	.9941
4235	INTERNTL STUDIES	5	.0016	.9957
0262	MUSIC	4	.0013	.9970
0215	ART	3	.0010	.9980
1220	EDUCATION ADM	3	.0010	.9990
1230	EXCEPTL CHILDREN	3	.0010	1.0000
* TOTAL *	3,063.00=ENRL	3,063	FLO.=AMT/ENRL	

(28) (29) (30) (31) (32) (33)

44

Figure 14

35 FLO-03 ICLM RUN

36 O S U CURRICULUM MATRIX
DISCIPLINE TO STUDENT MAJOR
(SDM-ACTI=AU79)

PAGE 25
10/13/80

37 38

			AMOUNT	ICLM	CUM ICLM
0330	ENTOMOLOGY	**********			
183	ENTOMOLOGY	**********	517	.4363	.4363
040	AGRONOMY		108	.0911	.5274
225	HORTICULTURE		79	.0667	.5941
025	AGR EDUCATION		68	.0574	.6515
075	BIOLOGY		38	.0321	.6836
495	ZOOLOGY		37	.0312	.7148
000	UNDECIDED		36	.0304	.7452
392	PLANT PATHOLOGY		34	.0287	.7739
184	ENVIRON BIOLOGY		25	.0211	.7950
603	CONTINUING EDUC		24	.0203	.8153
055	ANIMAL SCIENCE		23	.0194	.8347
285	MICROBIOLOGY		19	.0160	.8507
584	WILDLIFE MGT		16	.0135	.8642
580	ENVIRON INTERPRT		14	.0118	.8760
125	DAIRY SCIENCE		13	.0110	.8870
060	ANTHROPOLOGY		11	.0093	.8963
255	LANDSCAPE ARCH		11	.0093	.9056
181	ENGLISH		10	.0084	.9140
840	CAP- ENGINEERING		10	.0084	.9224
604	BIO SCI EDUC		8	.0068	.9292
805	CAP- ADMIN SCI		8	.0068	.9360
420	PSYCHOLOGY		6	.0051	.9411
033	AGR MECH & SYS		5	.0042	.9453
080	BOTANY		5	.0042	.9495
163	EDUC: SCI & MATH		5	.0042	.9537
205	GEOLOGY & MINERL		5	.0042	.9579
405	POULTRY SCIENCE		5	.0042	.9621
450	SPANISH		5	.0042	.9663
586	DRAW/PAINT/GRAPH		5	.0042	.9705
649	HONORS		5	.0042	.9747
810	CAP- AGRICULTURE		5	.0042	.9789
835	CAP- EDUCATION		5	.0042	.9831
990	CAP- VET MED		5	.0042	.9873
020	AG ECON & R SOCL		3	.0025	.9898
105	CIVIL ENGINEER		3	.0025	.9923
465	THEATER		3	.0025	.9948
576	FISHERIES MGT		3	.0025	.9973
950	CAP- MEDICINE		3	.0025	.9998
* TOTAL *			1,185	ICLM=AMT/TOTL	

39 40 41 42 43 44

45

CHAPTER III
IMPLEMENTATION GUIDE

STANDARD CADMS SOFTWARE

This section is a detailed technical description of a technique for historical analysis of student flow as well as techniques for enrollment and credit hour projection using an unmodified version of the NCHEMS Costing and Data Management System (CADMS) with no modifications.

The user must have a working knowledge of the Student Data Module (SDM) and the Data Management Module (DMM) portions of the NCHEMS CADMS in order to implement effectively these techniques. This discussion assumes that the reader is familiar with these programs and has the following relevant NCHEMS documents:

Student Data Module (SDM) Reference Manual NCHEMS Technical Report #60
Data Management Module (DMM)Reference Manual, NCHEMS Technical Report #62

This technique uses the Induced Course Load Matrix (ICLM) function of the SDM to produce transition probabilities from a sending state (Major/Level) to a receiving state (Major/Level) over time. The transition probabilities are then used in the DMM Program Costing function to produce projected enrollments. In this application, rows and sub-rows of the ICLM contain receiving state data while the columns and sub-columns contain sending state data.

The specific steps to implement these techniques are as follows.

HISTORICAL STUDENT FLOW

This discussion refers to control records SF-01 through SF-13 in Appendix A. These records illustrate the fields that need to be filled in for the SDM control records described on pages 21 to 41 of the SDM Reference Manual.

Note that the input student data record (SF-09) must be constructed from two academic terms. The student identifier must be the same for an individual student in both terms in order to match successfully the two files. After a file of student record (SF-09) is constructed, the identifier is no longer used by the system. The program, FLOW-01, described in the section on the enhanced software can be used to generate SF-09 records. These records correspond to the student registration data records (page 32) in the SDM Reference Manual. The units field is left blank since the zero units replacement option (SF-01) is used to put a value of 1.00 in each record, resulting in a count of 1 for each movement from sending state to receiving state.

In addition to specific DEFN and CNVT records (SF-02 through SF-07), it is necessary to define (DEFN) each institutional major and level code, both sending (COL, SCOL) and receiving (ROW, SROW) terms, as in a standard SDM implementation.

By defining an FTE student as 1 (SF-08), the I-CLM division in SDM-03 will result in transition coefficients.

The resulting SDM-FILE from SDM-01/02 in COL sequence in conjunction with SF-10 and SF-11 and in ROW sequence in conjunction with SF-11 and SF-12 will produce updates to DMM.

Although the level of report detail can be changed on SF-10 and SF-12, the reports are particularly difficult to comprehend in a student flow environment. The user is advised to report out of the DMM (via DMM-02 rather than SDM-03.)

B. PROJECTED STUDENT FLOW

Projected student headcount enrollments are calculated and reported by using the matrix manipulation, data storage, and report writing capabilities of the DMM, particularly the program costing function. The specific control records needed for these several steps are SF-14 through SF-45 in Appendix B. These DMM steps assume that transition coefficients developed from a single term to a single term are used to project a single term. Also, by default, it is assumed that the new students ("ENTR" state) for the projected term are exactly the same as entered in the receiving term.

After the initial DMM-FILE, Iteration #1, has been constructed from the SDM updates, an execution of DMM-03 (SF-14 through SF-18) is needed to prepare the DMM-FILE for projection.

SF-14 and SF-15 reproduce the receiving term enrollments (except for "EXIT" states) as the "BASE" enrollments.

SF-16 reproduces the "ENTR" state enrollments as "BASE" enrollments. If you are supplying your estimates of the projected term's entering enrollments, this request should be omitted. Rather, your estimates should be entered in the DMM-FILE (via DMM-01 updates) as CID = MAJ.ENTRXXXX PID = BASE.ENRL.HD. where XXXX is replaced by your definition of sending student levels. If your transition coefficients were

not developed from a single term to single term, then SF-14 through SF-16 should be omitted, and "BASE" enrollments must be entered as described above for "ENTR".

SF-17 and SF-18 rename sending state "ENTR" PIDs for later DMM reports. The updates from this DMM-03 step should be input to DMM-01 to produce DMM-FILE Iteration #2.

SF-19 through SF-21 specify parameters to the Program Costing function of the DMM (DMM-06/07) that will produce projected enrollments from the "BASE" enrollments using the transition coefficients from sending term to receiving term developed by the SDM. The updates from this DMM-06/07 step should be input to DMM-01 to produce DMM-FILE Iteration #3.

SF-22 through SF-27 calculate ratios and rename records for later DMM reports, as well as deleting data no longer needed. The updates from this DMM-03 step should be input to DMM-01 to produce DMM-FILE, Iteration #4.

C. STUDENT FLOW REPORTS

SF-28 through SF-45 specify requests for three reports from the DMM-FILE via DMM-02. These reports are: changes in enrollments in entering and exiting states for two terms (receiving and projected); changes in enrollment in continuing states for three terms (sending, receiving, and projected); a complete dump of the final DMM-FILE.

PROBLEM

The inherent costing design of DMM-06/07 is inexact for this student flow technique. DMM-06 produces error message #0058 "MATCHING RECORD NOT FOUND." This indicates that transition coefficients were found, but there were no base enrollments in this sending state. This is acceptable and does not represent an error. However, the reverse situation (a base enrollment, but no transition coefficients) is not noted, and these enrollments are lost.

One remedy is to determine which programs (Major/Level) have enrollments in the receiving term but have no enrollments in the sending term. This can be detected easily by inspection of the "PROJECTED ENROLLMENT" report from DMM-02. Once these have been determined, update DMM-FILE Iteration #2 via DMM-01 with a record for each offending "majr.lvl" as follows:

CID = MAJ.majr.lvl PID = FLO.majr.lvl AMT = 1.0000

Then rerun starting with DMM-06/07. The result of this is to continue the enrollments in those Major/Level states without transitional histories into the projected term unchanged.

D. PROJECTING DEPARTMENT WORKLOAD

Simply stated, this technique uses a headcount ICLM (from SDM) and projected student flow headcount enrollments (from the DMM) to produce projected credit hours by department(in the DMM).

Headcount ICLM

This discussion refers to control records PH-01 through PH-04 in Appendix C. A standard implementation of the SDM to produce a typical credit hour SDM-FILE is needed. The Major/Level structure needs to match (Major/Level to Major/Level) the structure in the projected term. In this document's implementation, that structure is the receiving term. More generally speaking the projected term Major/Level structure is the same as the "BASE" used by DMM-06/07. Therefore, if you use a term other than the receiving term for "BASE" enrollments, the source term for the credit hour SDM-FILE should be the same as the source of the "BASE" enrollments used in DMM-06/07. Any ICLM (i.e., an average of multiple terms or years) can be used as long as the Major/Level structure is a proper subset of the ICLM structure. The ACTI of this SDM-FILE should be "DPT." to mesh with these suggested control records.

The resulting SDM-FILE from SDM-01/02 in COL sequence in conjunction with PH-01 and PH-02 and in ROW sequence in conjunction with PH-03 and PH-04 will produce updates to DMM and minimal reports. The updates from these SDM-03 steps should be input to DMM-01 to produce DMM-FILE Iteration #5.

Projecting Hours

This discussion refers to control records PH-05 through PH-10 in Appendix C.

PH-05 through PH-07 specify parameters to the Program Costing function of the DMM (DMM-06/07) that will produce projected credit hours. The updates from this DMM-06/07 should be input to DMM-01 to produce DMM-FILE Iteration #6.

PH-08 through PH-10 calculate ratios and change amounts for later DMM reports, as well as deleting data no longer needed. The updates from this DMM-03 step should be input to DMM-01 to produce DMM-FILE Iteration #7.

PH-11 through PH-17 specify a single report request showing receiving credit hours, projected credit hours, ratio and difference for each department/level.

PROBLEM

Again, DMM-06 produces error message #0058 "MATCHING RECORD NOT FOUND." This indicates that an ICLM record was found, but there are no projected enrollments. This represents a real error if you expected the Major/Level structure of the projected term to exactly match the Major/Level structure of the ICLM. The reverse situation (a projected enrollment, but no ICLM) is not noted, but represents an underprojection of credit hours and is not detectable from the "PROJECTED CREDIT HOURS" report from DMM-02.

In order to ensure this does not occur, it is necessary to compare the COL sequence report (PH-01) produced by SDM-03 with the "PROJECTED ENROLLMENT" report (SF-35) produced by DMM-02. Every Major/Level on the "PROJECTED ENROLLMENT" report should also be on the COL sequence report. If not, the Major/Level structure is incorrect. Note that if the projected term Major/Level structure, is exactly the same as the ICLM major/level structure, neither situation will occur.

E. TECHNICAL CONSIDERATIONS

The resulting DMM-FILE (Iteration #7) contains the following data

CIDS	PIDS
MAJ.MMMMSSSS	SEND.ENRL.HD RECV.ENRL.HD PROJ.ENRL.HD RECV / SEND PROJ / RECV

Where MMMM is the SDM-01 (student flow) definition (DEFN) of Majors, SSSS is the SDM-01 (student flow) definition (DEFN) of student levels.

DPT.DDDDCCCC	RECV.CR.HOUR PROJ.CR.HOUR PROJ / RECV CHNG.CR.HOUR

where DDDD is the SDM-01 (ICLM) definition (DEFN) of academic departments, CCCC is the SDM-01 (ICLM) definition (DEFN) of course levels.

Note: All "FLO" and "HICL" PIDS have been deleted.

For report readability, you may replace all occurrences of each of the following codes with your choice of unique code in the control records.

"SEND"	"MAJ."
"RECV"	"FLO."
"PROJ"	"HICL"

File sizes are moderate for all but very large institutions. The largest student flow file is out of SDM-01 and is nearly equal to the number of unique student identifiers in both

the sending and receiving term's headcount enrollment. As always, the SDM-FILE out of SDM-01 in a credit hour environment is by far the largest.

Since few actual arithmetic calculations are performed, these programs (with the probable exception of SDM-01) run at I/O speed.

F. OTHER USES

These same techniques can be (and have been in New Mexico) used for a statewide interinstitutional student flow, including the two-year community college network.

By careful construction of the STUD-FILE (SF-09) into SDM-01, one can selectively analyze student flow (and therefore retention) of subsets of the student population (i.e., gender, age, transfers, freshmen, etc.).

ENHANCED SOFTWARE

This section presumes familiarity with the preceeding Implementation Guide section and, as does the guide, a working knowledge of the SDM (NCHEMS Technical Report #60) and the DMM (NCHEMS Technical Report #62).

By implementing a new program, a replacement program, and modifying three existing programs, the user produces a truly generalized flow-oriented computer based analytical tool. These software changes consist of a new version of DMM-06, DMM-07, and SDM-01; a replacement for SDM-03 that is named FLOW-03; and a pre-processor program called FLOW-01. These enhancements not only overcome some serious shortcomings encountered in using the standard NCHEMS costing and management system in a flow environment, but produce new highly readable 8 1/2 x 11 sized transition and ICLM reports.

A. FLOW PRE-PROCESSOR (FLOW-01)

This program reformats and matches an institutional student file (INST-FILE) to produce a student file (STUD-FILE) suitable as input to SDM-01 (CADMS) in a student flow environment.

The INST-FILE record should contain at least the following items: student identifier, student major, student level, academic term. As many terms as wanted may be on this file. Note that a conventionally defined STUD-FILE, suitable as input to SDM-01 in a typical credit hour environment, satisfies these requirements.

The required sequence of the INST-FILE is:

Major	- Student Identifier	(Required)
	- "MSTR" CODE	(Required only if "MSTR" "UNIQ")
	- Academic Term	(Optional - may be deleted)
	- Student Major	(Optional - May be deleted)
Minor	- Student Level	(Optional - may be deleted)

This complete sequence is required for FLOW-01 to detect invalid transitions within a term. Technically, FLOW-01 will operate with an INST-FILE sequenced only on student identifier. However, multiple executions of FLOW-01 on the same INST-FILE may result in slightly different results. If a student has multiple records within a term, only the last will be used. This exhaustive sort sequence will ensure that the last record in the series will be the same and, therefore, that FLOW-01 will produce the same results each execution on the same INST-FILE. FLOW-01 is written in ANS COBOL.

B. CONTROL RECORDS

A control file is required. This file contains requests for processing. All error messages are unnumbered, descriptive, and follow the control record in error.

FLOW-01 control input consists of the following:

(1)	Transition Definitions	(Required)
(2)	Default Name Changes	(Optional)
(3)	Replacement Requests	(Optional)
(4)	Master Definition	(Optional)
(5)	Comment Records	(Optional)

A discussion of each input follows.

RECORD NAME

T	R	A	N
1	2	3	4

STUDENT FLOW MODEL

SFM

TRANSITION DEFINITION

REQUIRED

INPUT=FLO-01

SDM ACTI NAME

6	7	8	9

SENDING TERM CODE

11	12	13	14

RECEIVING TERM CODE

16	17	18	19

PRINT INVALID TRANSITIONS? (Y/N)

20

TRANSITION DEFINITION

This required input defines transitions to be selected.

TRANSITION RECORD FORMAT

1-4	"TRAN"	
6-9	SDM ACTI name to be attached to this transition	
11-14	Sending Term Code	A field on the INST-FILE containing this value must be moved to HOLD-TERM in FLOW-01 source.
16-19	Receiving Term Code	
20-20	Print invalid transitions within a term? (Y/N) (DFLT=Y). These errors will always be counted, but the printing of the error message may be suppressed. This option affects all transitions, not just the "TRAN" record on which it appears.	

A maximum of 50 transitions may be defined.

RECORD NAME

N	A	M	E
1	2	3	4

STUDENT FLOW MODEL

SFM

DEFAULT NAME CHANGE

OPTIONAL

INPUT FLO-01

NAME OF ENTERING STATE

6	7	8	9

NAME OF EXITING STATE

11	12	13	14

SEPTEMBER 1980

DEFAULT NAME CHANGE

This optional feature allows renaming of entering and exiting states.

NAME RECORD FORMAT

1-4	"NAME"
6-9	XXXX Name of entering state
11-14	XXXX Name of exiting state

If this record is not encountered, "ENTR" and "EXIT" will be used.

If this record is input, both names need to be entered.

ENTERING STATE DEFINITION

An entering state is defined as the absence of a sending term.

If the master feature is invoked, a sending term record from a non-master also causes an entering state condition.

EXITING STATE DEFINITION

An exiting state is defined as the absence of a receiving term.

If the master feature is invoked, a receiving term from a nonmaster also causes an exiting state condition.

RECORD NAME

R	E	P	
1	2	3	4

STUDENT FLOW MODEL

SFM

REPLACEMENT REQUESTS

OPTIONAL

INPUT=FLO-01

REPLACEMENT TYPE

6	7	8	9

INST-FILE CODE

11	12	13	14	15	16

REPLACEMENT ACTION

18	19	20	21

MAXIMUM ELSE CONDITIONS

23	24	25	26

STATE AND SUBSTATE REPLACEMENT FEATURE

This optional feature specifies values to replace state and substate codes on specific records.

REPLACEMENT RECORD FORMAT

1-4	"REP1"	Applies to state replacement
	"REP2"	Applies to substate replacement
6-9	"REPL"	Replace state or substate with XXXX on all INST-FILE records containing CODE
	"PASS"	No state or substate replacement for INST-FILE records containing CODE
	"DROP"	Drop all INST-FILE records containing CODE
	"ELSE"	Specifies replacement action to be taken if no match on CODE
11-16	CODE	To be found on INST-FILE. A field from the INST-FILE must be moved to HOLD-REP1 or HOLD-REP2 in FLOW-01 source
18-21	XXXX	State or substate replacement action. If "CODE," use first four characters of CODE as replacement value. If "PASS," no replacement for INST-FILE records containing CODE. If "DROP," drop all INST-FILE records containing CODE. Otherwise, use XXXX as replacement value for all INST-FILE records containing CODE.
23-26	9999	Specify a four-digit number that defines the maximum number of "ELSE" conditions to be allowed. The default is nolimit. This field is only used on "ELSE" records.

The "ELSE" action is only in effect if "REPL," "PASS," OR "DROP" records are present.

The default XXXX value for the state "ELSE" condition is "DROP."

The default XXXX value for the substate "ELSE" condition is "DROP."

A maximum of 50 "REP1" replacements may be requested.

A maximum of 50 "REP2" replacements may be requested.

RECORD NAME

M	S	T	R
1	2	3	4

STUDENT FLOW MODULE

SFM

MASTER DEFINITION

OPTIONAL

INPUT FLO-01

MASTER DEFINITION TYPE

6	7	8	9

INST-FILE CODE

11	12	13	14	15	16

REPLACEMENT ACTION

18	19	20	21

MASTER FEATURE

This optional feature is used to define a master set of INST-FILE records for analysis.

Flow from a master to a nonmaster causes an exiting condition.

Flow to a master from a nonmaster causes an entering condition.

The nonmaster substate may optionally be replaced by the nonmaster CODE (or replacement value).

This feature is typically used to select a particular college or campus for analysis.

MASTER RECORD FORMAT

1-4	"MSTR"	
6-9	"MSTR" or "UNIQ"	All INST-FILE records containing CODE are defined as master records. All nonmaster records will have their state replaced by the entering (DFLT = "ENTR") or exiting (DFLT = "EXIT") state, depending on whether they are a sending or receiving term. Additionally, if "UNIQ", CODE becomes part of the sort sequence, and multiple CODEs within a term for one entry will be treated as multiple entities.
	"REPL"	Replace substate with XXXX for nonmaster INST-FILE records containing CODE.
	"ELSE"	Specifies nonmaster substate replacement action to be taken if no match on CODE.
11-16	CODE	To be found on INST-FILE. A field from the INST-FILE must be moved to HOLD-MSTR in FLOW-01 source.

18-21	XXXX	Substate replacement action for nonmaster records. If "CODE," use first four characters of CODE as substate replacement value. If "PASS," no substate replacement for nonmaster records containing CODE. Otherwise, use XXXX as substate replacement value for all nonmaster records containing CODE.

If "REPL" or "E ' records are present, an "MSTR" must also be present.

The default XXXX value for the "ELSE" condition is "PASS".

The "ELSE" condition is only in effect if "MSTR" or "REPL" records are present.

A maximum of 50 "REPL" records may be present.

COMMENT FEATURE

This optional feature simply allows comment records in the control file to be printed, thus allowing specific run documentation on the output report.

COMMENT RECORD FORMAT

1-4	"CMNT"
5-80	Comment Text

Note: Blank records will also be printed.

C. FLO-01 SOURCE CODE MODIFICATIONS

The "FD" for INST-FILE must be modified to read your specific INST-FILE. Move statements in paragraph INST-GET, section INST-READ-SECT need to be included as follows. At least four MOVE statements should be included. They are:

```
MOVE   Student Identifier    TO   HOLD-IDNT.
MOVE   Student Major         TO   HOLD-STAT.
MOVE   Student Level         TO   HOLD-SUBS.
MOVE   Academic Term         TO   HOLD-TERM.
```

Optionally, INST-FILE fields may be moved to HOLD-REP1, HOLD-REP2, and HOLD-MASTER. (See control records explanation.)

The exhaustive sort sequence may be eliminated by removing any or all of the four MOVE statements in FLOW-01 source; paragraph INST-SEQ-BLD: Section INST-READ-SECT.

Note that if the "MSTR" "UNIQ" feature is invoked, "MSTR" CODE is a required part of the sequence (immediately after student identifier).

Some modifications may be required for your specific hardware or installation standards. They include:

A. Configuration Section
B. Select Statements
C. Label Record Clauses
D. Block Contains Clauses
E. Use of RETURN-CODE in MAIN-RTN SECTION
F. Apostrophe versus quote as literal delimiter.

INTERNAL TABLE SIZES

"REP1" and "REP2" Records
01 REPLACEMENT-TABLE

```
        10 RT-MAX              VALUE 50
        10 RE-ENTRY            OCCURS 50
```

"TRAN" Records
01 TR-TABL

```
        10 TR-MAX              VALUE 50
        05 TR-ENTRY            OCCURS 50
        05 ST-ENTRY            OCCURS 50
```

"MSTR" Records
01 MT-ENTRY

```
        10 MT-MAX              VALUE 50
        05 MT-ENTRY            OCCURS 50
```

D. FLOW REPORT (FLOW-03)

This program produces a report from an SDM-FILE produced by SDM-01/SDM-02. Although an SDM-FILE built in a student flow environment is expected, an SDM-FILE in a typical credit hour environment is acceptable.

The SDM-FILE may be in two different sequences.

To produce a report showing Transitions from sending term to receiving term ("COL" to "ROW"), the required sequence is on positions 5 through 12, ascending. (See Figure 5)

To produce an attrition report showing transitions from receiving term back to sending term ("ROW" to "COL"), the required sequence is on positions 13 through 21, ascending.

Note that "COL" or "ROW" sequence required by SDM-03 is also acceptable to FLOW-03.

A more useful report is produced by FLOW-03 if the sort includes additional sort fields. This has the effect of producing a rank ordered report and is recommended.

Report Sequence	Required Sort Fields	Suggested Additional Sort Fields	
Send to Receive	5-12 Ascending	22-29 Descending	13-21 Ascendir
Receive to Send	13-21 Ascending	22-29 Descending	5-12 Ascendir

The heading of FLOW-03 is taken from the SDM-FILE; therefore, particular attention should be paid to naming dimensions ("DEFN" "NAME" "ROW" and "DEFN" "NAME" "COL") is SDM-01.

If FTE enrollment records are present on the SDM-FILE, they will be used by FLOW-03. This is only appropriate in a typical credit hour environment, and they should not be present in a student flow environment.

All error messages are documented in NCHEMS Technical REPORT #60 (Student Data Module).

FLOW-03 is written in ANS COBOL.

A control file is optional.

RECORD NAME

F	L	0	3
1	2	3	4

STUDENT FLOW MODULE — SFM

FLO-03 CONTROL RECORD

OPTIONAL — INPUT=FLO-03

RUN NAME	RUN DATE	LINES PER PAGE
6 7 8 9 11 12 13	15 16 17 18 19 20 21 22	24 25

WHICH ACTI?	HEADING OPTION	DMM FUNCT	DMM ENROLL
27 28 29 30	32	34	36

DMM ENROLLMENT PID	DMM TRANS	DMM TRANS PID
38 39 40 41 42 43 44 45 46 47 48 49	51	53 54 55 56

SEPTEMBER 1980

FLO-03 CONTROL FILE INPUT

No sequence required; blank records allowed.

Control Record (Optional)

1-4	"FLO3"	
6-13	Run Name	Will be printed as part of heading; DFLT = Value from SDM1
15-22	Run Date	Will be printed as part of heading; DFLT = Value from SDM1
24-25	Lines Per Page	Specify report lines per page; DFLT = Value from SDM1, minimum = 30. Entering "00" will suppress new page headings caused by page full condition.
27-30	Which ACTI?	Enter specific ACTI code to be used. DFLT = "MAJ."
32-32	Heading Option	Specify if a new report heading is wanted on each new state. "Y" or "N"; DFLT = "N".
34-34	DMM Function?	Specify the update function of DMM update records; "C", "U", "E", or "R"; DFLT = "C".
36-36	DMM Enrollments?	Specify if DMM update enrollment records are to be written; "Y"or "N"; DFLT = "Y".
38-49	DMM Enrollment PID	Enter PID name for DMM update enrollment records. DFLT SEND Seq = "SEND.ENRL.HD" DFLT RECV Seq = "RECV.ENRL.HD"
51-51	DMM Transitions?	Specify if DMM update transition records are to be written: "Y" or "N"; DFLT SEND Seq = "Y". DFLT RECV Seq = "N".

53-56	DMM Transition PID	Enter PID prefix for DMM update transition records. DFLT = "FLO." Note: This field is also USED as a report column heading, regardless of DMM output request.

Modifications

Some modifications may be required for your specific hardware or installation standards. They include:

A. Configuration section
B. Select statements
C. Label record clauses
D Block contains clauses
E. Apostrophe versus quote as literal delimiter.

Internal Table Sizes

```
01      TOTL-TABLE

        10    TOTL-MAX       VALUE 2000
        05    TOTL-ENTRY     OCCURS 2000
```

Standard CADMS vs Enhanced CADMS Notes

A. Ensure the SDM ACTIs defined on SF-04 and SF-05 match "TRAN" control records in FLOW-01.

B. Ensure the entering and exiting codes from FLOW-01 ("NAME" control record or defaults) match SF-06 and SF-07.

C. Ensure any new state or substate codes created through FLOW-01 options are defined ("DEFN") or converted ("CNVT") in SDM-01.

D. Delete SF-08.

E. Replace SF-10 through SF-13 with FLOW-03 control record(s).

F. Optionally replace or augment SF-19 through SF-21 with DMM-06 "FLOW" control record.

G. Optionally replace or augment PH-05 through PH-07 with DMM-06 "FLOW" control record.

SDM-01 MODIFICATIONS

When cycling an SDM-FILE from SDM-02 back through SDM-01 (a common practice in this implementation) for redefinition and reconversion, the descriptive name on "DEFN" records was lost. This bug has been fixed.

DMM-06/07 MODIFICATIONS

The problems mentioned previously in DMM-06 concerning error message #0058 have been corrected. Enrollments previously dropped with no messages are now noted and counted.

In addition, a new control record is used in lieu of all other control records into DMM-06. This not only substantially reduces the complexity of DMM-06, but also changes columns and report headings to be more descriptive and meaningful in a flow environment.

RECORD NAME

F	L	O	W	3	3	4
1	2	3	4	5	6	7

STUDENT FLOW MODULE

SFM

DMM-06 FLOW CONTROL RECORD

OPTIONAL

DMM-06

BASE ENROLLMENT PID

8 9 10 11 12 13 14 15 16 17 18 19

FLOW TRANSITION PID

21 22 23 24 25 26 27 28 29 30 31 32

PROJECTED ENROLLMENT PID

34 35 36 37 38 39 40 41 42 43 44 45

CID PREFIX

47 48 49 50

DMM-06 Flow Control Record

Record Position	Content	Explanation
1-7	"FLOW334"	
8-19	Base Enrollment PID	Specify PID that identifies the base year enrollment DFLT="BASE.ENRL.HD".
21-32	Flow Transition PID	Specify first four characters of PIDs containing transition probabilities DFLT="FLO."
34-45	Projected Enrollment PID	Specify PID to be used to identify resulting projected year enrollments. DFLT="PROJ.ENRL.HD"
47-50	CID Prefix	Specify a 4 character prefix to be used in conjunction with receiving state and substate codes to construct a CID. This CID and the projected enrollment PID (above) jointly identify the projected enrollment value. DFLT="MAJ.".

NOTE: If this record is used it should be the only DMM-06 control record.

APPENDIX A

RECORD IDEN[illegible]ER

Record Name	Record Number
S D M 1	1 0 0
1 2 3 4	5 6 7

STUDENT DATA MODULE | SDM

CONTROL RECORD

OPTIONAL

INPUT = SDM-01

STUDENT FLOW OPTION

SF-01

Run Name: S T U F L O W (8 9 10 11 12 13 14 15)

Run Date: (16 17 18 19 20 21 22 23)

Lines Per Page: (24 25)

Institution Name: (26 27 28 29 30 31 32 33 34 35 36 37 38 39 40 41 42 43 44 45 46 47 48 49 50 51 52 53 54 55)

Input File? (STUD/SDM/BOTH): S T U D (56 57 58 59)

Student File in Sequence? (Y/N): N (60)

Zero Units Replacements: 0 1 0 0 (61 62 63 64)

Convert SDM-File? (Y/N): (65)

Message Limit: (66 67 68 69)

RECORD IDENTIFIER

Record Name	Record Number
D E F N	1 0 5
1 2 3 4	5 6 7

DIMENSION DEFINITION RECORD

REQUIRED

INPUT=SDM-01

STUDENT FLOW OPTION

SF-02

Dimension Type

N A M E

10 11 12 13

Code

C O L

16 17 18 19

Name

S E N D I N G T E R M

28 29 30 31 32 33 34 35 36 37 38 39 40 41 42 43

STUDENT DATA MODULE	SDM

DIMENSION DEFINITION RECORD

REQUIRED

INPUT=SDM-01

STUDENT FLOW OPTION

SF-03

RECORD IDENTIFIER

Record Name	Record Number
DEFN	105
1 2 3 4	5 6 7

Dimension Type

NAME

10 11 12 13

Code

ROW

16 17 18 19

Name

RECEIVING TERM

28 29 30 31 32 33 34 35 36 37 38 39 40 41 42 43

STUDENT DATA MODULE | SDM

RECORD IDENTIFIER

Record Name	Record Number
D E F N	1 0 5
1 2 3 4	5 6 7

DIMENSION DEFINITION RECORD

REQUIRED

INPUT=SDM-01

STUDENT FLOW OPTION

SF-04

Dimension Type

A C T I

10 11 12 13

Code

M A J .

16 17 18 19

Name

S T U D E N T F L O W

28 29 30 31 32 33 34 35 36 37 38 39 40 41 42 43

111

112

STUDENT DATA MODULE | SDM

RECORD IDENTIFIER

Record Name	Record Number
C N V T	1 1 0
1 2 3 4	5 6 7

DIMENSION CONVERSION RECORD

OPTIONAL

INPUT = SDM-01

STUDENT FLOW OPTION

SF-05

Dimension Type

A	C	T	I
10	11	12	13

FROM FIELD

Values on Student File

Low End of Range	High End of Range
E L S E	
16 17 18 19	28 29 30 31

TO FIELD

Defined Code

M	A	J	.
40	41	42	43

NOTE:

If you have multiple transition codes (SDM ACTI) in the STUD-FILE, you must replace 'ELSE' with a specific code.

RECORD IDENTIFIER

Record Name	Record Number
D E F N	1 0 5
1 2 3 4	5 6 7

DIMENSION DEFINITION RECORD

REQUIRED

INPUT=SDM-01

STUDENT FLOW OPTION

SF-06

Dimension Type

C	O	L	
10	11	12	13

Code

E	N	T	R
16	17	18	19

Name

E	N	T	E	R	I	N	G		S	T	U	D	N	T	S
28	29	30	31	32	33	34	35	36	37	38	39	40	41	42	43

116

115

RECORD IDENTIFIER

Record Name	Record Number
D E F N	1 0 5
1 2 3 4	5 6 7

DIMENSION DEFINITION RECORD

REQUIRED

INPUT-SDM-01

STUDENT FLOW OPTION

SF-07

Dimension Type

R O W
10 11 12 13

Code

E X I T
16 17 18 19

Name

E X I T I N G S T U D E N T S
28 29 30 31 32 33 34 35 36 37 38 39 40 41 42 43

117

118

STUDENT DATA MODULE | SDM

RECORD IDENTIFIER

Record Name	Record Number
E N R L	1 1 5
1 2 3 4	5 6 7

ENROLLMENT DEFINITION RECORD

OPTIONAL

INPUT = SDM-01

STUDENT FLOW OPTION

SF-08

Program (COL) Code

D	F	L	T
10	11	12	13

Student Level (SCOL) Code

D	F	L	T
16	17	18	19

Full Time Equivalent (FTE) Value

0	0	1	0	0
22	23	24	25	26

STUDENT DATA MODULE SDM

STUDENT REGISTRATION DATA RECORD

REQUIRED

INPUT=SDM-01

STUDENT FLOW OPTION

SF-09

Student Identifier

1	2	3	4	5	6	7	8	9	10

Transition ID	Sending Term		Receiving Term	
	Major	Level	Major	Level
11 12 13 14	15 16 17 18	19 20 21 22	23 24 25 26	27 28 29 30

NOTES:

- Student identifier is optional.
- Transition ID is your choice of code to uniquely identify this transition.
- If no sending term for a student: sending major = 'ENTR', sending level = receiving level.
- If no receiving term for a student: receiving major = 'EXIT', receiving level = sending level.
- Unused positions should be blank.

RECORD IDENTIFIER

Record Name				Record Number		
S	D	M	3	1	3	5
1	2	3	4	5	6	7

CONTROL RECORD

OPTIONAL

INPUT = SDM-03

STUDENT FLOW OPTION

SF-10

Run Name	Run Date	Lines Per Page
8 9 10 11 12 13 14 15	16 17 18 19 20 21 22 23	24 25

SDM File Sequence? (ROW/COL)	Which Activity (ACTI) Wanted?	Print Option	Program Center Identifier (CID) Prefix	Which Enrollment? (FTE/HEAD)
C O L	M A J .	3	M A J .	F T E
26 27 28	29 30 31 32	33	34 35 36 37	38 39 40 41

DMM Function? (C/U/E/R)	Heading Option? (Y/N)
C	N
42	43

STUDENT DATA MODULE SDM

RECORD IDENTIFIER

Record Name	Record Number
D M M C	1 5 0
1 2 3 4	5 6 7

DATA REQUEST RECORD (COL SEQUENCE)

OPTIONAL

INPUT = SDM-03

STUDENT FLOW OPTION

SF-11

Discipline ICLM Updates? (Y/N)	ICLM PID Prefix
N	
8	9 10 11 12

Program ICLM Updates? (Y/N)	ICLM PID Prefix
Y	F L O .
13	14 15 16 17

Program Credit Hour Updates? (Y/N)	Parameter Identifier (PID)
Y	S E N D . E N R L . H D
18	19 20 21 22 23 24 25 26 27 28 29 30

RRPM "MAJR" Records? (Y/N)	RRPM "ICLM" Records? (Y/N)
N	N
31	32

STUDENT DATA MODULE | SDM

RECORD IDENTIFIER

Record Name				Record Number		
S	D	M	3	1	3	5
1	2	3	4	5	6	7

CONTROL RECORD

OPTIONAL

INPUT = SDM-03

STUDENT FLOW OPTION

SF-12

Run Name	Run Date	Lines Per Page
8 9 10 11 12 13 14 15	16 17 18 19 20 21 22 23	24 25

SDM File Sequence? (ROW/COL)	Which Activity (ACTI) Wanted?	Print Option	Program Center Identifier (CID) Prefix	Which Enrollment? (FTE/HEAD)
R O W	M A J .	3		
26 27 28	29 30 31 32	33	34 35 36 37	38 39 40 41

DMM Function? (C/U/E/R)	Heading Option? (Y/N)
C	N
42	43

APPENDIX B

DATA MANAGEMENT MODULE | DMM

RECORD IDENTIFIER

Record Name				Record Number		
D	U	P		3	2	0
1	2	3	4	5	6	7

DUPLICATE TRANSACTION REQUEST RECORD

OPTIONAL

INPUT—DMM-03

STUDENT FLOW OPTION

SF-14

Function (C/U/E/R)	Which is A Range? (CID/PID/NEI)	Center Identifier (CID) 1	Center Identifier (CID) 2
C	CID		MAJ.EXIS
8	9 10 11	12 13 14 15 16 17 18 19 20 21 22 23	24 25 26 27 28 29 30 31 32 33 34 35

Parameter Identifier (PID) 1	Parameter Identifier (PID) 2
RECV.ENRL.HD	BASE.ENRL.HD
37 38 39 40 41 42 43 44 45 46 47 48	49 50 51 52 53 54 55 56 57 58 59 60

NOTE: This request assumes a vendor specific collating sequence in the CID range.

DATA MANAGEMENT MODULE — DMM

RECORD IDENTIFIER

Record Name				Record Number		
D	U	P		3	2	0
1	2	3	4	5	6	7

DUPLICATE TRANSACTION REQUEST RECORD

OPTIONAL

INPUT—DMM-03

STUDENT FLOW OPTION

SF-15

Function (C/U/E/R)	Which is A Range? (CID/PID/NEI)	Center Identifier (CID) 1	Center Identifier (CID) 2
C	C I D	M A J . E X I T 9 9 9 9	
8	9 10 11	12 13 14 15 16 17 18 19 20 21 22 23	24 25 26 27 28 29 30 31 32 33 34 35

Parameter Identifier (PID) 1	Parameter Identifier (PID) 2
R E C V . E N R L . H D	B A S E . E N R L . H D
37 38 39 40 41 42 43 44 45 46 47 48	49 50 51 52 53 54 55 56 57 58 59 60

NOTE: This request assumes a vendor specific collating sequence in the CID range.

DATA MANAGEMENT MODULE	DMM

RECORD IDENTIFIER

Record Name	Record Number
D U P	3 2 0
1 2 3 4	5 6 7

DUPLICATE TRANSACTION REQUEST RECORD

OPTIONAL

INPUT—DMM-03

STUDENT FLOW OPTION

SF-16

Function (C/U/E/R)	Which is A Range? (CID/PID/NEI)	Center Identifier (CID) 1	Center Identifier (CID) 2
C	CIO	MAJ.ENTR	MAJ.ENTR9999
8	9 10 11	12 13 14 15 16 17 18 19 20 21 22 23	24 25 26 27 28 29 30 31 32 33 34 35

Parameter Identifier (PID) 1	Parameter Identifier (PID) 2
SEND.ENRL.HD	BASE.ENRL.HD
37 38 39 40 41 42 43 44 45 46 47 48	49 50 51 52 53 54 55 56 57 58 59 60

NOTE: This request assumes a vendor specific collating sequence in the CID range. If you are supplying estimates of entering enrollments, this request must be omitted.

DATA MANAGEMENT MODULE | DMM

RECORD IDENTIFIER

Record Name				Record Number		
D	U	P		3	2	0
1	2	3	4	5	6	7

DUPLICATE TRANSACTION REQUEST RECORD

OPTIONAL

INPUT--DMM-03

STUDENT FLOW OPTION

SF-17

Function (C/U/E/R)	Which is A Range? (CID/PID/NEI)	Center Identifier (CID) 1	Center Identifier (CID) 2
C	CID	MAJ.ENTR	MAJ.ENTR9999
8	9 10 11	12 13 14 15 16 17 18 19 20 21 22 23	24 25 26 27 28 29 30 31 32 33 34 35

Parameter Identifier (PID) 1	Parameter Identifier (PID) 2
SEND.ENRL.HD	RECV.ENRL.HD
37 38 39 40 41 42 43 44 45 46 47 48	49 50 51 52 53 54 55 56 57 58 59 60

NOTE: This request assumes a vendor specific collating sequence in the CID range.

DATA MANAGEMENT MODULE — DMM

RECORD IDENTIFIER

Record Name	Record Number
DEL	320
1 2 3 4	5 6 7

DELETE TRANSACTION REQUEST RECORD

OPTIONAL

INPUT—DMM-03

STUDENT FLOW OPTION

SF-18

RANGE OF CIDs TO BE SELECTED

Low Center Identifier (CID)	Thru	High Center Identifier (CID)
MAJ.ENTR		MAJ.ENTR9999
12 13 14 15 16 17 18 19 20 21 22 23		24 25 26 27 28 29 30 31 32 33 34 35

RANGE OF PIDs (within CIDs) TO BE DELETED

Low Parameter Identifier (PID)	Thru	High Parameter Identifier (PID)
SEND.ENRL.HD		SEND.ENRL.HD
37 38 39 40 41 42 43 44 45 46 47 48		49 50 51 52 53 54 55 56 57 58 59 60

NOTE: This request assumes a vendor specific collating sequence in the CID range.

RECORD IDENTIFIER

Record Name	Record Number
D D E F	3 3 5
1 2 3 4	5 6 7

DATA MANAGEMENT MODULE | DMM

DISCIPLINE UNIT COST DEFINITION RECORD

OPTIONAL

INPUT—DMM-06

STUDENT FLOW OPTION

SF-19

NAMES OF PARAMETER IDENTIFIERS (PIDs) FOR DERIVATION OF DISCIPLINE UNIT COST

Cost Parameter Identifier (PID)

9 10 11 12 13 14 15 16 17 18 19 20

Unit's Parameter Identifier (PID)

22 23 24 25 26 27 28 29 30 31 32 33

New PID? (Y/N)

35

Name of New Discipline Unit Cost Parameter Identifier (PID)

37 38 39 40 41 42 43 44 45 46 47 48

Function (C·U·E R)

50

OR

Parameter Identifier (PID) Containing Unit Cost

B	A	S	E	.	E	N	R	L	.	H	D
52	53	54	55	56	57	58	59	60	61	62	63

DATA MANAGEMENT MODULE — DMM

STUDENT FLOW OPTION

SF-20

RECORD IDENTIFIER

Record Name	Record Number
I D E F	3 3 5
1 2 3 4	5 6 7

IWLM DEFINITION RECORD

OPTIONAL

INPUT - DM[illegible]-06

RANGE OF CIDs CONTAINING IWLM PIDs

Low Center Identifier (CID)	Thru	High Center Identifier (CID)
M A J .		M A J . 9 9 9 9 9 9 9 9
8 9 10 11 12 13 14 15 16 17 18 19		20 21 22 23 24 25 26 27 28 29 30 31

DEFINITION OF IWLM PID

Starting Location	Length	Value to be Found In Parameter Identifier (PID)
0 1	0 4	F L O .
32 33	34 35	36 37 38 39 40 41 42 43 44 45 46 47

RANGE OF PIDs (WITHIN CIDs) TO BE SEARCHED

Low Parameter Identifier (PID)	Thru	High Parameter Identifier (PID)
F L O .		F L O . 9 9 9 9 9 9 9 9
48 49 50 51 52 53 54 55 56 57 58 59		60 61 62 63 64 65 66 67 68 69 70 71

NOTE: This request assumes a vendor specific collating sequence in both CID and PID ranges.

DATA MANAGEMENT MODULE — DMM

RECORD IDENTIFIER

Record Name	Record Number
P D E F (1 2 3 4)	3 3 5 (5 6 7)

PROGRAM CID PID DEFINITION RECORD

OPTIONAL

INPUT—DMM-06

STUDENT FLOW OPTION

SF-21

DEFINITION OF PROGRAM CENTER IDENTIFIER (CID)

Constant Portion			Transfer From IWLM PID Portion		
CID Start	Length	Constant (Left Justified)	PID Start	Length	CID Start
0 1 (8 9)	0 4 (10 11)	M A J . (12 13 14 15)	0 5 (24 25)	0 8 (26 27)	0 5 (28 29)

DEFINITION OF PROGRAM PARAMETER IDENTIFIER (PIDs)

PROGRAM TOTAL COST PARAMETER IDENTIFIER (PID)

Updates? (Y/N)	PID Name	Function (C/U/E/R)
Y (30)	P R O J . E N R L . H D (31 32 33 34 35 36 37 38 39 40 41 42)	C (43)

PROGRAM IWLM UNITS PARAMETER IDENTIFIER (PID)

Updates? (Y/N)	PID Name	Function (C/U/E/R)
N (44)	(45 46 47 48 49 50 51 52 53 54 55 56)	(57)

PROGRAM UNIT COST PARAMETER IDENTIFIER (PID)

Updates? (Y/N)	PID Name	Function (C/U/E/R)
N (58)	(59 60 61 62 63 64 65 66 67 68 69 70)	(71)

DATA MANAGEMENT MODULE — DMM

STUDENT FLOW OPTION

SF-22

ARITHMETIC TRANSACTION REQUEST RECORD

OPTIONAL

INPUT-DMM-03

RECORD IDENTIFIER

Record Name	Record Number
ARTH	320
1 2 3 4	5 6 7

Function (C/U/E/R): C (8)

Arithmetic Operation (ADD/SUB/MUL/DIV): DIV (9 10 11)

RANGE OF CIDs TO BE SELECTED

Low Center Identifier (CID): MAJ. (12 13 14 15 16 17 18 19 20 21 22 23)

Thru

High Center Identifier (CID): MAJ.99999999 (24 25 26 27 28 29 30 31 32 33 34 35)

Literal Code (1/2/N): N (36)

FIELD 1

Parameter Identifier (PID) 1 or Literal 1: SEND.ENRL.HD (37 38 39 40 41 42 43 44 45 46 47 48)

FIELD 2

Parameter Identifier (PID) 2 or Literal 2: RECV.ENRL.HD (49 50 51 52 53 54 55 56 57 58 59 60)

Resulting Parameter Identifier (PID): RECV / SEND (61 62 63 64 65 66 67 68 69 70 71 72)

NOTE: This request assumes a vendor specific collating sequence in the CID range.

DATA MANAGEMENT MODULE — DMM

ARITHMETIC TRANSACTION REQUEST RECORD

OPTIONAL

INPUT--DMM-03

STUDENT FLOW OPTION

SF-23

RECORD IDENTIFIER

Record Name	Record Number
A R T H	3 2 0
1 2 3 4	5 6 7

Function (C/U/E/R)	Arithmetic Operation (ADD/SUB/MUL/DIV)
C	D I V
8	9 10 11

RANGE OF CIDs TO BE SELECTED

Low Center Identifier (CID)	Thru	High Center Identifier (CID)
M A J .		M A J . 9 9 9 9 9 9 9 9
12 13 14 15 16 17 18 19 20 21 22 23		24 25 26 27 28 29 30 31 32 33 34 35

Literal Code (1/2/N)	FIELD 1 — Parameter Identifier (PID) 1 or Literal 1	FIELD 2 — Parameter Identifier (PID) 2 or Literal 2
N	R E C V . E N R L . H D	P R O J . E N R L . H D
36	37 38 39 40 41 42 43 44 45 46 47 48	49 50 51 52 53 54 55 56 57 58 59 60

Resulting Parameter Identifier (PID)

P R O J / R E C V
61 62 63 64 65 66 67 68 69 70 71 72

NOTE: This request assumes a vendor specific collating sequence in the CID range.

DATA MANAGEMENT MODULE — DMM

ARITHMETIC TRANSACTION REQUEST RECORD

OPTIONAL

INPUT--DMM-03

STUDENT FLOW OPTION

SF-24

RECORD IDENTIFIER

Record Name	Record Number
A R T H	3 2 0
1 2 3 4	5 6 7

Function (C/U/E/R): C (8)

Arithmetic Operation (ADD/SUB/MUL/DIV): D I V (9 10 11)

RANGE OF CIDs TO BE SELECTED

Low Center Identifier (CID): M A J . E N T R (12 13 14 15 16 17 18 19 20 21 22 23)

Thru

High Center Identifier (CID): M A J . E N T R 9 9 9 9 (24 25 26 27 28 29 30 31 32 33 34 35)

Literal Code (1/2/N): N (36)

FIELD 1

Parameter Identifier (PID) 1 or Literal 1: R E C V . E N R L . H D (37 38 39 40 41 42 43 44 45 46 47 48)

FIELD 2

Parameter Identifier (PID) 2 or Literal 2: B A S E . E N R L . H D (49 50 51 52 53 54 55 56 57 58 59 60)

Resulting Parameter Identifier (PID): P R O J / R E C V (61 62 63 64 65 66 67 68 69 70 71 72)

NOTE: This request assumes a vendor specific collating sequence in the CID range.

DATA MANAGEMENT MODULE | DMM

RECORD IDENTIFIER

Record Name	Record Number
D U P	3 2 0
1 2 3 4	5 6 7

DUPLICATE TRANSACTION REQUEST RECORD

OPTIONAL | INPUT–DMM-03

STUDENT FLOW OPTION

SF-25

Function (C/U/E/R)	Which is A Range? (CID/PID/NEI)	Center Identifier (CID) 1	Center Identifier (CID) 2
C	C I D	MAJ.ENTR	MAJ.ENTR9999
8	9 10 11	12 13 14 15 16 17 18 19 20 21 22 23	24 25 26 27 28 29 30 31 32 33 34 35

Parameter Identifier (PID) 1	Parameter Identifier (PID) 2
BASE.ENRL.HD	PROJ.ENTR.HD
37 38 39 40 41 42 43 44 45 46 47 48	49 50 51 52 53 54 55 56 57 58 59 60

NOTE: This request assumes a vendor specific collating sequence in the CID range.

DATA MANAGEMENT MODULE — DMM

STUDENT FLOW OPTION

SF-26

DELETE TRANSACTION REQUEST RECORD

OPTIONAL

INPUT—DMM-03

RECORD IDENTIFIER

Record Name	Record Number
DEL	320
1 2 3 4	5 6 7

RANGE OF CIDs TO BE SELECTED

Low Center Identifier (CID)	Thru	High Center Identifier (CID)
MAJ.		MAJ.99999999
12 13 14 15 16 17 18 19 20 21 22 23		24 25 26 27 28 29 30 31 32 33 34 35

RANGE OF PIDs (within CIDs) TO BE DELETED

Low Parameter Identifier (PID)	Thru	High Parameter Identifier (PID)
BASE.ENRL.HD		BASE.ENRL.HD
37 38 39 40 41 42 43 44 45 46 47 48		49 50 51 52 53 54 55 56 57 58 59 60

NOTE: This request assumes a vendor specific collating sequence in the CID range.

DATA MANAGEMENT MODULE	DMM

RECORD IDENTIFIER

Record Name				Record Number		
D	E	L		3	2	0
1	2	3	4	5	6	7

DELETE TRANSACTION REQUEST RECORD

OPTIONAL

INPUT--DMM-03

STUDENT FLOW OPTION

SF-27

RANGE OF CIDs TO BE SELECTED

Low Center Identifier (CID)												Thru	High Center Identifier (CID)											
M	A	J	.										M	A	J	.	9	9	9	9	9	9	9	9
12	13	14	15	16	17	18	19	20	21	22	23		24	25	26	27	28	29	30	31	32	33	34	35

RANGE OF PIDs (within CIDs) TO BE DELETED

Low Parameter Identifier (PID)												Thru	High Parameter Identifier (PID)											
F	L	O	.										F	L	O	.	9	9	9	9	9	9	9	9
37	38	39	40	41	42	43	44	45	46	47	48		49	50	51	52	53	54	55	56	57	58	59	60

NOTE: This request assumes a vendor specific collating sequence in both CID and PID ranges.

DATA MANAGEMENT MODULE	DMM

RECORD IDENTIFIER

Record Name	Record Number
R E Q C	3 1 0
1 2 3 4	5 6 7

REQUEST CONTROL RECORD

OPTIONAL

INPUT–DMM-02

STUDENT FLOW OPTION

SF-28

Request Identifier	Output Option (REPT SDMM BOTH)	Request Heading
E N E X	R E P T	E N T E R I N G _ A N D _ E X I T I N G
9 10 11 12	14 15 16 17	19 20 21 22 23 24 25 26 27 28 29 30 31 32 33 34 35 36 37 38

Report Format (C L)	Starting Page Number	Page Number Increment	Lines Per Page
40	42 43 44 45	47 48 49 50	52 53

DATA MANAGEMENT MODULE	DMM

RECORD IDENTIFIER

Record Name	Record Number
C I D S	3 1 0
1 2 3 4	5 6 7

CID SELECTION RECORD

OPTIONAL

INPUT--DMM-02

STUDENT FLOW OPTION

SF-29

Request Identifier

E	N	E	X
9	10	11	12

RANGE OF CIDs TO BE SELECTED

Low Center Identifier (CID)												Thru	High Center Identifier (CID)											
M	A	J	.	E	N	T	R						M	A	J	.	E	N	T	R	9	9	9	9
14	15	16	17	18	19	20	21	22	23	24	25		27	28	29	30	31	32	33	34	35	36	37	38

NOTE: This request assumes a vendor specific collating sequence in the CID range.

DATA MANAGEMENT MODULE	DMM

RECORD IDENTIFIER

Record Name				Record Number		
C	I	D	S	3	1	0
1	2	3	4	5	6	7

CID SELECTION RECORD

OPTIONAL

INPUT–DMM-02

STUDENT FLOW OPTION

SF-30

Request Identifier

E	N	E	X
9	10	11	12

RANGE OF CIDs TO BE SELECTED

Low Center Identifier (CID)												Thru	High Center Identifier (CID)											
M	A	J	.	E	X	I	T						M	A	J	.	E	X	I	T	9	9	9	9
14	15	16	17	18	19	20	21	22	23	24	25		27	28	29	30	31	32	33	34	35	36	37	38

DATA MANAGEMENT MODULE | DMM

RECORD IDENTIFIER

Record Name	Record Number
P I D S	3 1 0
1 2 3 4	5 6 7

PID SELECTION RECORD

OPTIONAL

INPUT—DMM-02

STUDENT FLOW OPTION

SF-31

Request Identifier	PID Column Location
E N E X	1
9 10 11 12	13

RANGE OF PIDs (WITHIN CIDs) TO BE SELECTED

Low Parameter Identifier (PID)	Thru	High Parameter Identifier (PID)
R E C V . E N R L . H D		
14 15 16 17 18 19 20 21 22 23 24 25		27 28 29 30 31 32 33 34 35 36 37 38

112

165

164

DATA MANAGEMENT MODULE — DMM

RECORD IDENTIFIER

Record Name				Record Number		
P	I	D	S	3	1	0
1	2	3	4	5	6	7

PID SELECTION RECORD

OPTIONAL

INPUT – DMM-02

STUDENT FLOW OPTION

SF-32

Request Identifier				PID Column Location
E	N	E	X	2
9	10	11	12	13

RANGE OF PIDs (WITHIN CIDs) TO BE SELECTED

Low Parameter Identifier (PID)												Thru	High Parameter Identifier (PID)											
P	R	O	J		/		R	E	C	V														
14	15	16	17	18	19	20	21	22	23	24	25		27	28	29	30	31	32	33	34	35	36	37	38

DATA MANAGEMENT MODULE — DMM

RECORD IDENTIFIER

Record Name	Record Number
P I D S	3 1 0
1 2 3 4	5 6 7

PID SELECTION RECORD

OPTIONAL

INPUT - DMM-02

STUDENT FLOW OPTION

SF-33

Request Identifier	PID Column Location
E N E X	3
9 10 11 12	13

RANGE OF PIDs (WITHIN CIDs) TO BE SELECTED

Low Parameter Identifier (PID)	Thru	High Parameter Identifier (PID)
P R O J . E N R L . H D		
14 15 16 17 18 19 20 21 22 23 24 25		27 28 29 30 31 32 33 34 35 36 37 38

DATA MANAGEMENT MODULE — DMM

SUB-TOTAL CONTROL RECORD

OPTIONAL

INPUT—DMM-02

STUDENT FLOW OPTION

SF-34

RECORD IDENTIFIER

Record Name				Record Number		
S	T	O	T	3	1	0
1	2	3	4	5	6	7

Request Identifier			
E	N	E	X
9	10	11	12

CID Mask Field											
				E	N	E	X				
14	15	16	17	18	19	20	21	22	23	24	25

DATA MANAGEMENT MODULE	DMM

RECORD IDENTIFIER

Record Name	Record Number
R E Q C	3 1 0
1 2 3 4	5 6 7

REQUEST CONTROL RECORD

OPTIONAL

INPUT-DMM-02

STUDENT FLOW OPTION

SF-35

Request Identifier	Output Option (REPT-SDMM BOTH)	Request Heading
L O W	R E P T	P R O J E C T E D _ E N R O L L M E N T
9 10 11 12	14 15 16 17	19 20 21 22 23 24 25 26 27 28 29 30 31 32 33 34 35 36 37 38

Report Format (C L)	Starting Page Number	Page Number Increment	Lines Per Page
40	42 43 44 45	47 48 49 50	52 53

DATA MANAGEMENT MODULE	DMM

RECORD IDENTIFIER

Record Name	Record Number
C I D S	3 1 0
1 2 3 4	5 6 7

CID SELECTION RECORD

OPTIONAL

INPUT--DMM-02

STUDENT FLOW OPTION

F-36

Request Identifier

F	L	O	W
9	10	11	12

RANGE OF CIDs TO BE SELECTED

Low Center Identifier (CID)	Thru	High Center Identifier (CID)
14 15 16 17 18 19 20 21 22 23 24 25		27 28 29 30 31 32 33 34 35 36 37 38
		M A J . E N T Q 9 9 9 9

NOTE: This request assumes a vendor specific collating sequence in the CID range.

DATA MANAGEMENT MODULE	DMM

STUDENT FLOW OPTION

SF-37

RECORD IDENTIFIER

Record Name	Record Number
C I D S	3 1 0
1 2 3 4	5 6 7

CID SELECTION RECORD

OPTIONAL

INPUT—DMM-02

Request Identifier

F	L	O	W
9	10	11	12

RANGE OF CIDs TO BE SELECTED

Low Center Identifier (CID)												Thru	High Center Identifier (CID)											
M	A	J	.	E	N	T	S						M	A	J	.	E	X	I	S	9	9	9	9
14	15	16	17	18	19	20	21	22	23	24	25		27	28	29	30	31	32	33	34	35	36	37	38

NOTE: This request assumes a vendor specific collating sequence in the CID range.

DATA MANAGEMENT MODULE	DMM

RECORD IDENTIFIER

Record Name				Record Number		
C	I	D	S	3	1	0
1	2	3	4	5	6	7

CID SELECTION RECORD

OPTIONAL

INPUT–DMM-02

STUDENT FLOW OPTION

SF-38

Request Identifier

F	L	O	W
9	10	11	12

RANGE OF CIDs TO BE SELECTED

Low Center Identifier (CID)												Thru	High Center Identifier (CID)											
M	A	J	.	E	X	I	U																	
14	15	16	17	18	19	20	21	22	23	24	25		27	28	29	30	31	32	33	34	35	36	37	38

NOTE: This request assumes a vendor specific collating sequence in the CID range.

DATA MANAGEMENT MODULE	DMM

PID SELECTION RECORD

OPTIONAL

INPUT--DMM-02

STUDENT FLOW OPTION

SF-39

RECORD IDENTIFIER

Record Name	Record Number
P I D S	3 1 0
1 2 3 4	5 6 7

Request Identifier	PID Column Location
F L O W	1
9 10 11 12	13

RANGE OF PIDs (WITHIN CIDs) TO BE SELECTED

Low Parameter Identifier (PID)	Thru	High Parameter Identifier (PID)
S E N D . E N R L . H D		
14 15 16 17 18 19 20 21 22 23 24 25		27 28 29 30 31 32 33 34 35 36 37 38

DATA MANAGEMENT MODULE	DMM

STUDENT FLOW OPTION

SF-40

RECORD IDENTIFIER

Record Name	Record Number
P I D S	3 1 0
1 2 3 4	5 6 7

PID SELECTION RECORD

OPTIONAL

INPUT--DMM-02

Request Identifier	PID Column Location
F L O W	2
9 10 11 12	13

RANGE OF PIDs (WITHIN CIDs) TO BE SELECTED

Low Parameter Identifier (PID)	Thru	High Parameter Identifier (PID)
R E C V / S E N D		
14 15 16 17 18 19 20 21 22 23 24 25		27 28 29 30 31 32 33 34 35 36 37 38

183

182

DATA MANAGEMENT MODULE | DMM

RECORD IDENTIFIER

Record Name				Record Number		
P	I	D	S	3	1	0
1	2	3	4	5	6	7

PID SELECTION RECORD

OPTIONAL

INPUT-DMM-02

STUDENT FLOW OPTION

SF-41

Request Identifier				PID Column Location
F	L	O	W	3
9	10	11	12	13

RANGE OF PIDs (WITHIN CIDs) TO BE SELECTED

Low Parameter Identifier (PID)												Thru	High Parameter Identifier (PID)											
R	E	C	V	.	E	W	R	L	.	H	D													
14	15	16	17	18	19	20	21	22	23	24	25		27	28	29	30	31	32	33	34	35	36	37	38

DATA MANAGEMENT MODULE	DMM

RECORD IDENTIFIER

Record Name	Record Number
P I D S	3 1 0
1 2 3 4	5 6 7

PID SELECTION RECORD

OPTIONAL

INPUT-DMM-02

STUDENT FLOW OPTION

SF-42

Request Identifier	PID Column Location
F L O W	4
9 10 11 12	13

RANGE OF PIDs (WITHIN CIDs) TO BE SELECTED

Low Parameter Identifier (PID)	Thru	High Parameter Identifier (PID)
P R O J / R E C V		
14 15 16 17 18 19 20 21 22 23 24 25		27 28 29 30 31 32 33 34 35 36 37 38

DATA MANAGEMENT MODULE	DMM

PID SELECTION RECORD

OPTIONAL

INPUT--DMM-02

STUDENT FLOW OPTION

SF-43

RECORD IDENTIFIER

Record Name				Record Number		
P	I	D	S	3	1	0
1	2	3	4	5	6	7

Request Identifier				PID Column Location
F	L	o	w	5
9	10	11	12	13

RANGE OF PIDs (WITHIN CIDs) TO BE SELECTED

Low Parameter Identifier (PID)												Thru	High Parameter Identifier (PID)											
P	R	o	J	.	E	N	R	L	.	H	D													
14	15	16	17	18	19	20	21	22	23	24	25		27	28	29	30	31	32	33	34	35	36	37	38

DATA MANAGEMENT MODULE	DMM

RECORD IDENTIFIER

Record Name	Record Number
S T O T	3 1 0
1 2 3 4	5 6 7

SUB-TOTAL CONTROL RECORD

OPTIONAL

INPUT--DMM-02

STUDENT FLOW OPTION

SF-44

Request Identifier	CID Mask Field
F L O W	M A J . . L E V
9 10 11 12	14 15 16 17 18 19 20 21 22 23 24 25

DATA MANAGEMENT MODULE | DMM

STUDENT FLOW OPTION

SF-45

RECORD IDENTIFIER

Record Name

R	E	Q	C
1	2	3	4

Record Number

3	1	0
5	6	7

REQUEST CONTROL RECORD

OPTIONAL

INPUT DMM-02

Request Identifier

D	U	M	P
9	10	11	12

Output Option (REPT SDMM BOTH)

R	E	P	T
14	15	16	17

Request Heading

	S	T	U		F	L	O	W		F	I	L	E		D	U	M	P	
19	20	21	22	23	24	25	26	27	28	29	30	31	32	33	34	35	36	37	38

Report Format (C L)

40

Starting Page Number

42	43	44	45

Page Number Increment

47	48	49	50

Lines Per Page

52	53

APPENDIX C

STUDENT DATA MODULE

SDM

CONTROL RECORD

OPTIONAL

INPUT = SDM-03

RECORD IDENTIFIER

Record Name	Record Number
S D M 3	1 3 5
1 2 3 4	5 6 7

PROJECT HOURS OPTION

PH-01

Run Name	Run Date	Lines Per Page
8 9 10 11 12 13 14 15	16 17 18 19 20 21 22 23	24 25

SDM File Sequence? (ROW/COL)	Which Activity (ACTI) Wanted?	Print Option	Program Center Identifier (CID) Prefix	Which Enrollment? (FTE/HEAD)
C O L	D P T .	2	M A J .	H E A D
26 27 28	29 30 31 32	33	34 35 36 37	38 39 40 41

DMM Function? (C/U/E/R)	Heading Option? (Y/N)
C	
42	43

STUDENT DATA MODULE

SDM

PROJECT HOURS OPTION

PH-02

RECORD IDENTIFIER

Record Name	Record Number
D M M C	1 5 0
1 2 3 4	5 6 7

DATA REQUEST RECORD (COL SEQUENCE)

OPTIONAL

INPUT = SDM-03

Discipline ICLM Updates? (Y/N)	ICLM PID Prefix
N	
8	9 10 11 12

Program ICLM Updates? (Y/N)	ICLM PID Prefix
Y	H I C L
13	14 15 16 17

Program Credit Hour Updates? (Y/N)	Parameter Identifier (PID)
N	
18	19 20 21 22 23 24 25 26 27 28 29 30

RRPM "MAJR" Records? (Y/N)	RRPM "ICLM" Records? (Y/N)
N	N
31	32

RECORD IDENTIFIER

Record Name				Record Number		
S	D	M	3	1	3	5
1	2	3	4	5	6	7

CONTROL RECORD

OPTIONAL

INPUT = SDM-03

PROJECT HOURS OPTION

PH-03

Run Name	Run Date	Lines Per Page
8 9 10 11 12 13 14 15	16 17 18 19 20 21 22 23	24 25

SDM File Sequence? (ROW/COL)	Which Activity (ACTI) Wanted?	Print Option	Program Center Identifier (CID) Prefix	Which Enrollment? (FTE/HEAD)
R O W	D P T .	2		
26 27 28	29 30 31 32	33	34 35 36 37	38 39 40 41

DMM Function? (C/U/E/R)	Heading Option? (Y/N)
C	
42	43

STUDENT DATA MODULE | SDM

Record Name	Record Number
D M M R	1 4 0
1 2 3 4	5 6 7

DATA REQUEST RECORD (ROW SEQUENCE)

OPTIONAL

INPUT = SDM-03

PROJECT HOURS OPTION

PH-04

Discipline Credit Hour Updates? (Y/N)	Parameter Identifier (PID)	RRPM "DISC" Records? (Y/N)
Y	RECV.CR.HOUR	N
8	9 10 11 12 13 14 15 16 17 18 19 20	21

202

201

DATA MANAGEMENT MODULE	DMM

RECORD IDENTIFIER

Record Name				Record Number		
D	D	E	F	3	3	5
1	2	3	4	5	6	7

DISCIPLINE UNIT COST DEFINITION RECORD

OPTIONAL

INPUT—DMM-06

PROJECT HOURS OPTION

PH-05

NAMES OF PARAMETER IDENTIFIERS (PIDs) FOR DERIVATION OF DISCIPLINE UNIT COST

Cost Parameter Identifier (PID)

9	10	11	12	13	14	15	16	17	18	19	20

Unit's Parameter Identifier (PID)

22	23	24	25	26	27	28	29	30	31	32	33

New PID? (Y/N)

35

Name of New Discipline Unit Cost Parameter Identifier (PID)

37	38	39	40	41	42	43	44	45	46	47	48

Function (C/U/E/R)

50

OR

Parameter Identifier (PID) Containing Unit Cost

P	R	O	J	.	E	N	R	L	.	H	D
52	53	54	55	56	57	58	59	60	61	62	63

204

203

DATA MANAGEMENT MODULE	DMM

RECORD IDENTIFIER

Record Name	Record Number
I D E F	3 3 5
1 2 3 4	5 6 7

IWLM DEFINITION RECORD

OPTIONAL

INPUT–DMM-06

PROJECT HOURS OPTION

PH-06

RANGE OF CIDs CONTAINING IWLM PIDs

Low Center Identifier (CID)	Thru	High Center Identifier (CID)
M A J .		M A J . 9 9 9 9 9 9 9 9
8 9 10 11 12 13 14 15 16 17 18 19		20 21 22 23 24 25 26 27 28 29 30 31

DEFINITION OF IWLM PID

Starting Location	Length	Value to be Found In Parameter Identifier (PID)
0 1	0 4	H I C L
32 33	34 35	36 37 38 39 40 41 42 43 44 45 46 47

RANGE OF PIDs (WITHIN CIDs) TO BE SEARCHED

Low Parameter Identifier (PID)	Thru	High Parameter Identifier (PID)
H I C L		H I C L 9 9 9 9 9 9 9 9
48 49 50 51 52 53 54 55 56 57 58 59		60 61 62 63 64 65 66 67 68 69 70 71

NOTE: This request assumes a vendor specific collating sequence in both CID and PID ranges.

DATA MANAGEMENT MODULE	DMM

PROJECT HOURS OPTION

PH-07

RECORD IDENTIFIER

Record Name	Record Number
P D E F	3 3 5
1 2 3 4	5 6 7

PROGRAM CID PID DEFINITION RECORD

OPTIONAL

INPUT-DMM-06

DEFINITION OF PROGRAM CENTER IDENTIFIER (CID)

Constant Portion			Transfer From IWLM PID Portion		
CID Start	Length	Constant (Left Justified)	PID Start	Length	CID Start
0 1	0 4	D P T .	0 5	0 8	0 5
8 9	10 11	12 13 14 15 16 17 18 19 20 21 22 23	24 25	26 27	28 29

DEFINITION OF PROGRAM PARAMETER IDENTIFIER (PIDs)

PROGRAM TOTAL COST PARAMETER IDENTIFIER (PID)

Updates? (Y/N)	PID Name	Function (C/U/E/R)
Y	P R O J . C R . H O U R	C
30	31 32 33 34 35 36 37 38 39 40 41 42	43

PROGRAM IWLM UNITS PARAMETER IDENTIFIER (PID)

Updates? (Y/N)	PID Name	Function (C/U/E/R)
N		
44	45 46 47 48 49 50 51 52 53 54 55 56	57

PROGRAM UNIT COST PARAMETER IDENTIFIER (PID)

Updates? (Y/N)	PID Name	Function (C/U/E/R)
N		
58	59 60 61 62 63 64 65 66 67 68 69 70	71

DATA MANAGEMENT MODULE	DMM

RECORD IDENTIFIER

Record Name	Record Number
A R T H	3 2 0
1 2 3 4	5 6 7

ARITHMETIC TRANSACTION REQUEST RECORD

OPTIONAL

INPUT—DMM-03

PROJECT HOURS OPTION

PH-08

Function (C/U/E/R)	Arithmetic Operation (ADD/SUB/MUL/DIV)
C	D I V
8	9 10 11

RANGE OF CIDs TO BE SELECTED

Low Center Identifier (CID)	Thru	High Center Identifier (CID)
D P T .		D P T . 9 9 9 9 9 9 9 9
12 13 14 15 16 17 18 19 20 21 22 23		24 25 26 27 28 29 30 31 32 33 34 35

Literal Code (1/2/N)	FIELD 1 — Parameter Identifier (PID) 1 or Literal 1	FIELD 2 — Parameter Identifier (PID) 2 or Literal 2
N	R E C V . C R . H O U R	P R O J . C R . H O U R
36	37 38 39 40 41 42 43 44 45 46 47 48	49 50 51 52 53 54 55 56 57 58 59 60

Resulting Parameter Identifier (PID)

P R O J	/	R E C V
61 62 63 64 65 66 67 68 69 70 71 72		

NOTE: This request assumes a vendor specific collating sequence in the CID range.

RECORD IDENTIFIER		
Record Name	Record Number	
A R T H	3 2 0	
1 2 3 4	5 6 7	

DATA MANAGEMENT MODULE	DMM
ARITHMETIC TRANSACTION REQUEST RECORD	
OPTIONAL	INPUT–DMM-03

PROJECT HOURS OPTION

PH-09

Function (C/U/E/R)	Arithmetic Operation (ADD/SUB/MUL/DIV)
C	S U B
8	9 10 11

RANGE OF CIDs TO BE SELECTED

Low Center Identifier (CID)	Thru	High Center Identifier (CID)
D P T .		D P T . 9 9 9 9 9 9 9 9
12 13 14 15 16 17 18 19 20 21 22 23		24 25 26 27 28 29 30 31 32 33 34 35

Literal Code (1/2/N)	FIELD 1 — Parameter Identifier (PID) 1 or Literal 1	FIELD 2 — Parameter Identifier (PID) 2 or Literal 2
N	R E C V . C R . H O U R	P R O J . C R . H O U R
36	37 38 39 40 41 42 43 44 45 46 47 48	49 50 51 52 53 54 55 56 57 58 59 60

Resulting Parameter Identifier (PID)

C H N G . C R . H O U R

61 62 63 64 65 66 67 68 69 70 71 72

NOTE: This request assumes a vendor specific collating sequence in the CID range.

DATA MANAGEMENT MODULE — DMM

RECORD IDENTIFIER

Record Name	Record Number
DEL	320
1 2 3 4	5 6 7

DELETE TRANSACTION REQUEST RECORD

OPTIONAL

INPUT—DMM-03

PROJECT HOURS OPTION

PH-10

RANGE OF CIDs TO BE SELECTED

Low Center Identifier (CID)	Thru	High Center Identifier (CID)
MAJ.		MAJ.99999999
12 13 14 15 16 17 18 19 20 21 22 23		24 25 26 27 28 29 30 31 32 33 34 35

RANGE OF PIDs (within CIDs) TO BE DELETED

Low Parameter Identifier (PID)	Thru	High Parameter Identifier (PID)
HICL		HICL9999999
37 38 39 40 41 42 43 44 45 46 47 48		49 50 51 52 53 54 55 56 57 58 59 60

NOTE: This request assumes a vendor specific collating sequence in both CID and PID ranges.

DATA MANAGEMENT MODULE | DMM

RECORD IDENTIFIER

Record Name	Record Number
R E Q C	3 1 0
1 2 3 4	5 6 7

REQUEST CONTROL RECORD

OPTIONAL

INPUT—DMM-02

PROJECT HOURS OPTION

PH-11

Request Identifier

C R H R

9 10 11 12

Output Option (REPT SDMM BCTH)

R E P T

14 15 16 17

Request Heading

P R O J E C T E D _ C R E D I T _ H R S

19 20 21 22 23 24 25 26 27 28 29 30 31 32 33 34 35 36 37 38

Report Format (C L)

40

Starting Page Number

42 43 44 45

Page Number Increment

47 48 49 50

Lines Per Page

52 53

215

215

DATA MANAGEMENT MODULE — DMM

RECORD IDENTIFIER

Record Name				Record Number		
C	I	D	S	3	1	0
1	2	3	4	5	6	7

CID SELECTION RECORD

OPTIONAL

INPUT--DMM-02

PROJECT HOURS OPTION

PH-12

Request Identifier

C	R	H	R
9	10	11	12

RANGE OF CIDs TO BE SELECTED

Low Center Identifier (CID)												Thru	High Center Identifier (CID)											
D	P	T	.										D	P	T	.	9	9	9	9	9	9	9	9
14	15	16	17	18	19	20	21	22	23	24	25		27	28	29	30	31	32	33	34	35	36	37	38

NOTE: This request assumes a vendor specific collating sequence in the CID range.

DATA MANAGEMENT MODULE — DMM

RECORD IDENTIFIER

Record Name				Record Number		
P	I	D	S	3	1	0
1	2	3	4	5	6	7

PID SELECTION RECORD

OPTIONAL

INPUT~DMM-02

PROJECT HOURS OPTION

PH-13

Request Identifier				PID Column Location
C	R	H	R	1
9	10	11	12	13

RANGE OF PIDs (WITHIN CIDs) TO BE SELECTED

Low Parameter Identifier (PID)												Thru	High Parameter Identifier (PID)											
R	E	C	V	.	C	R	.	H	O	U	R													
14	15	16	17	18	19	20	21	22	23	24	25		27	28	29	30	31	32	33	34	35	36	37	38

DATA MANAGEMENT MODULE	DMM

PID SELECTION RECORD

OPTIONAL

INPUT~DMM-02

PROJECT HOURS OPTION

PH-14

RECORD IDENTIFIER

Record Name	Record Number
P I D S	3 1 0
1 2 3 4	5 6 7

Request Identifier	PID Column Location
C R H R	2
9 10 11 12	13

RANGE OF PIDs (WITHIN CIDs) TO BE SELECTED

Low Parameter Identifier (PID)	Thru	High Parameter Identifier (PID)
P R O J . C R . H O U R		
14 15 16 17 18 19 20 21 22 23 24 25		27 28 29 30 31 32 33 34 35 36 37 38

DATA MANAGEMENT MODULE	DMM

RECORD IDENTIFIER

Record Name	Record Number
P I D S	3 1 0
1 2 3 4	5 6 7

PID SELECTION RECORD

OPTIONAL

INPUT--DMM-02

PROJECT HOURS OPTION

PH-15

Request Identifier	PID Column Location
C R H R	3
9 10 11 12	13

RANGE OF PIDs (WITHIN CIDs) TO BE SELECTED

Low Parameter Identifier (PID)	Thru	High Parameter Identifier (PID)
P R O J / R E C V		
14 15 16 17 18 19 20 21 22 23 24 25		27 28 29 30 31 32 33 34 35 36 37 38

224

223

DATA MANAGEMENT MODULE | DMM

PROJECT HOURS OPTION

PH-16

RECORD IDENTIFIER

Record Name				Record Number		
P	I	D	S	3	1	0
1	2	3	4	5	6	7

PID SELECTION RECORD

OPTIONAL

INPUT–DMM-02

Request Identifier				PID Column Location
C	R	H	R	4
9	10	11	12	13

RANGE OF PIDs (WITHIN CIDs) TO BE SELECTED

Low Parameter Identifier (PID)												Thru	High Parameter Identifier (PID)												
C	H	N	G	.	C	R	.	H	O	U	R														
14	15	16	17	18	19	20	21	22	23	24	25		27	28	29	30	31	32	33	34	35	36	37	38	

226

225

DATA MANAGEMENT MODULE — DMM

PROJECT HOURS OPTION

PH-17

SUB-TOTAL CONTROL RECORD

OPTIONAL

INPUT—DMM-02

RECORD IDENTIFIER

Record Name				Record Number		
S	T	O	T	3	1	0
1	2	3	4	5	6	7

Request Identifier				CID Mask Field																				
C	R	H	R	D	P	T	.						.	L	E	V								
9	10	11	12	14	15	16	17	18	19	20	21	22	23	24	25									

SELECTED LITERATURE ON ATTRITION-RETENTION IN COLLEGES AND UNIVERSITIES

NATIONAL STUDIES

Alexander W. Astin, Preventing Students from Dropping Out, San Francisco: Jossey-Bass (1975).

William B. Fetters, Withdrawal from Institutions of Higher Education: An Appraisal With Longitudinal Data Involving Diverse Institutions, Washington: Superintendent of Documents (1977) This is NCES 77-264 by HEW, a report from the National Longitudinal Study (NLS).

Research Triangle Institute, Transfer Students in Institutions of Higher Education, Washington: Superintendent of Documents (1977). This is NCES 77-250 for HEW, a report from the NLS.

R. E. Iffert, Retention and Withdrawal of College Students, U. S. Department of HEW, Bulletin 1958, No. 1, Washington: Superintendent of Documents, 1958.

SURVEY AND SYNTHESIS OF RESEARCH

Robert G. Cope and William Hannah, Revolving College Doors: The Causes and Consequences of Dropping Out, Stopping Out and Transferring, New York: Wiley (1975).

William G. Spady, "Dropouts from Higher Education: An Interdisciplinary Review and Synthesis," Interchange, 1970, 1, 64-85.

Vincent Tinto, "Dropout from Higher Education: A Theoretical Synthesis of Recent Research," Review of Educational Research, Winter, 1975, 45, 1, 89-125.

D. M. Knoell, "A Critical Review of Research on the College Dropout," in L.A. Pervin, L.E. Reik, and W. Dalrymple (eds.), The College Dropout and the Utilization of Talent, Princeton: Princeton University Press (1966).

Paul Wing, Higher Education Enrollment Forecasting: A Manual for State-Level Agencies, NCHEMS at WICHE, Boulder, Colorado, 1974.

METHODOLOGICAL

A. W. Astin, "The Methodology of Research on College Impact, Part One," Sociology of Education, Summer 1970, 43, 3, 223-254.

A. W. Astin, "The Methodology of Research on College Impact, Part Two," Sociology of Education, Fall 1970, 43, 4, 437-450.

D. M. Knoell, "Institutional Research on Retention and Withdrawal," in H.T. Sprauge (ed.), Research on College Students, Boulder: WICHE (1960).

P. U. Eckl.-d, "A Source of Error in College Attrition Studies," Sociology of Education, 1964, 38, 60-72.

Samuel S. Peng, Celcille E. Stafford, and Robin J. Talbert, Review and Annotation of Study Reports, National Longitudinal Study, NCES 78-238, Washington: Superintendent of documents (May, 1977).

Thomas H. Naylor, Joseph L. Balintfy, Donald S. Burdick, and Kong Chu, Computer, Simulation Techniques, John Wiley & Sons, Inc., New York, 1966.