DOCUMENT RESUME

ED 249 219 SP 025 347

AUTHOR	Meyers, Joel
TITLE	Consultation Skills: How Teachers Can Maximize Help from Specialists in Schools.
INSTITUTION	Minnesota Univ., Minneapolis. National Support Systems Project.
SPONS AGENCY	Office of Special Education and Rehabilitative Services (ED), Washington, DC. Div. of Personnel Preparation.
PUB DATE	[82]
GRANT	OEG007902045
NOTE	129p.; For other modules in this series, see ED 238 844 and SP 025 332-354. For the genesis of these modules, see ED 186 399. Reviewed by Jack I. Bardon and Barbara Meyers.
PUB TYPE	Guides Classroom Use - Guides (For Teachers) (052)
EDRS PRICE	MF01/PC06 Plus Postage.
DESCRIPTORS	*Consultants; *Counseling Effectiveness; Counseling Objectives; *Counselor Teacher Cooperation; Helping Relationship; Higher Education; Learning Modules; Mainstreaming; Preservice Teacher Education; Resource Teachers; Specialists; *Teacher Attitudes; *Teacher Education Curriculum; *Teacher Educators
IDENTIFIERS	Education for All Handicapped Children Act

ABSTRACT

This module (part of a series of 24 modules) is on training teachers to make effective use of consultation. The genesis of these materials is in the 10 "clusters of capabilities," outlined in the paper, "A Common Body of Practice for Teachers: The Challenge of Public Law 94-142 to Teacher Education." These clusters form the proposed core of professional knowledge needed by teachers in the future. The module is to be used by teacher educators to reexamine and enhance their current practice in preparing classroom teachers to work competently and comfortably with children who have a wide range of individual needs. The module includes objectives, scales for assessing the degree to which the identified knowledge and practices are prevalent in an existing teacher education program, and self-assessment test items. Bibliographic references and articles on how teachers can acquire consultation skills are included. (JD)

****
* Reproductions supplied by EDRS are the best that can be made *
* from the original document. *
****

ED249219

CONSULTATION SKILLS:

HOW TEACHERS CAN MAXIMIZE HELP FROM SPECIALISTS IN SCHOOLS

PREPARED BY

JOEL MEYERS

REVIEWED BY

JACK I. BARDON

BARBARA MEYERS

U.S. DEPARTMENT OF EDUCATION
NATIONAL INSTITUTE OF EDUCATION
EDUCATIONAL RESOURCES INFORMATION
CENTER (ERIC)

X This document has been reproduced as received from the person or organization originating it.
Minor changes have been made to improve reproduction quality.

• Points of view or opinions stated in this document do not necessarily represent official NIE position or policy.

SP 025 347

Extending the Challenge:

Working Toward a Common Body of Practice for Teachers

Concerned educators have always wrestled with issues of excellence and professional development. It is argued, in the paper "A Common Body of Practice for Teachers: The Challenge of Public Law 94-142 to Teacher Education,"* that the Education for All Handicapped Children Act of 1975 provides the necessary impetus for a concerted reexamination of teacher education. Further, it is argued that this reexamination should enhance the process of establishing a body of knowledge common to the members of the teaching profession. The paper continues, then, by outlining clusters of capabilities that may be included in the common body of knowledge. These clusters of capabilities provide the basis for the following materials.

The materials are oriented toward assessment and development. First, the various components, rating scales, self-assessments, sets of objectives, and respective rationale and knowledge bases are designed to enable teacher educators to assess current practice relative to the knowledge, skills, and commitments outlined in the aforementioned paper. The assessment is conducted not necessarily to determine the worthiness of a program or practice, but rather to reexamine current practice in order to articulate essential common elements of teacher education. In effect, then, the "challenge" paper and the ensuing materials incite further discussion regarding a common body of practice for teachers.

Second and closely aligned to assessment is the developmental perspective offered by these materials. The assessment process allows the user to view current practice on a developmental continuum. Therefore, desired or more

* Published by the American Association of Colleges for Teacher Education, Washington, DC, 1980 ($5.50).

appropriate practice is readily identifiable. On another, perhaps more important dimension, the "challenge" paper and these materials focus discussion on preservice teacher education. In making decisions regarding a common body of practice it is essential that specific knowledge, skill and commitment be acquired at the preservice level. It is also essential that other additional specific knowledge, skill, and commitment be acquired as a teacher is inducted into the profession and matures with years of experience. Differentiating among these levels of professional development is paramount. These materials can be used in forums in which focused discussion will explicate better the necessary elements of preservice teacher education. This explication will then allow more productive discourse on the necessary capabilities of beginning teachers and the necessary capabilities of experienced teachers.

In brief, this work is an effort to capitalize on the creative ferment of the teaching profession in striving toward excellence and professional development. The work is to be viewed as evolutionary and formative. Contributions from our colleagues are heartily welcomed.

This module is one in a series of modules. The series is intended for use by teacher educators to prepare all teachers to work competently and comfortably with children who have a range of individual needs. The genesis of the modules is in ten "clusters of capabilities" that are outlined in the paper, "A Common Body of Practice for Teachers: The Challenge of Public Law 94-142 to Teacher Education." The "clusters" form the proposed core of professional knowledge needed by teachers who will practice in the world of tomorrow. Each module provides further elaboration of a specified "cluster of capabilities"--in this case, maximizing the assistance derived from consultation with school specialists.

CONSULTATION SKILLS:

HOW TEACHERS CAN MAXIMIZE HELP FROM SPECIALISTS IN SCHOOLS

Current approaches to providing special education (as required and implied in P.L. 94-142) cause teachers to rely more heavily on consultative help from a variety of school specialists in meeting effectively the increasingly complicated challenges in today's schools. For example, the Least Restrictive Environment principle dictates that greater numbers of handicapped children spend more time in regular classrooms. As a result, regular classroom teachers are being asked to work with handicapped children often despite their lack of training for teaching these children. These teachers are also asked to use Individualized Education Programs which require the implementation of a comprehensive curriculum for the child based on his or her individual needs. Detailed and individualized educational plans represent a major change for many teachers whose traditional approach has been to gear the curriculum to the group. Consultative support is one important resource which can help teachers meet these new demands effectively.

As teachers are asked to work more in the regular classroom with special needs students, the role of professionals on child study teams (e.g., psychologists, counselors, resource room teachers), has changed. Rather than being expected to help move these children out of the classroom, the consultant's job is ever more frequently one of helping the teacher keep these children in the classroom. Not only is there an increased demand for consultation, but consultative help is needed from a greater variety of school specialists.

There is an important perspective to maintain on this issue. Even though the need for consultation has increased dramatically, often it has not been provided since current service delivery models historically have not included consultation.

For example, school psychologists are often required to complete a large number of evaluations rather than work with the teacher to help develop an effective educational program for the child. Efforts to stimulate special service personnel such as school psychologists, speech and language pathologists, counselors, and others to shift their roles toward consultation in order to provide meaningful services to a maximum number of children are still needed.

Classroom teachers are a group with potential to be a significant factor in stimulating effective consultative relationships in schools. However, at least three factors interfere with this: (1) Teachers are not clearly aware of the consultative services which might be available to them; (2) Teachers are taught that seeking help is a sign of weakness; (3) Consultation is a dynamic process which does not generally produce the "quick solution" or "product" which some teachers may expect. Teacher training programs must provide information about the types of consultative support which are available, and they must convey the notion that being a professional requires teachers to seek help. As teachers become more aware of the availability and need for consultation they will be more likely to request it -- providing some pressure for consultation. Also, as teachers become familiar with the consultation process and skilled at receiving this help, they will be able to facilitate more effective consultation.

Consideration of the teacher's role in facilitating effective consultation is rather new. Nevertheless, it is a potentially powerful concept since it puts more control and responsibility in the hands of the teacher. Teachers need training in order to request and facilitate consultation in an effective manner. Training must emphasize the knowledge base underlying consultation as well as the skills necessary in receiving consultative help and in facilitating effective consultation. In the past, teachers have seldom received training in consultation,

and most school consultants have supported the teacher's lack of knowledge about consultation in order to maintain a superior position and control the relationship. The consultation process must be more open and facilitating of open communication if it is to meet the needs of today's teachers. The purpose of this module is to provide a rationale and resources for teacher training programs in training teachers in the skills necessary to receive consultation.

Training teachers to make effective use of consultation requires didactic presentation of the knowledge base which underlies consultation. Teachers need to know what types of consultation may be available, what kinds of outcomes might be expected, and what theoretical models of behavior are used by consultants. Beyond the conceptual background, teachers need to develop a variety of specific skills as a part of this training. For example, teachers need to know how to define their children's problems in sufficiently specific terms, they need to understand and be experienced with the consultation process, and they need to know what it is like to provide and to receive consultation. Perhaps most importantly, teachers need communication skills in order to maximize the effectiveness of consultation. If teacher-educators really want consultation to occur after training, then they need to be sure that teachers view giving and requesting help as important professional activities. Teachers who are trained to use consultants need to know that they will have to overcome notions that consultation is a sign of weakness (i.e., the teacher should be able to handle the problem without help). Consequently, teachers who seek consultation will need to develop ways in which to respond to this resistance and part of their training will need to include motivation to do whatever they can to be more effective, including seeking and using assistance from consultants.

This training module will present consultation from the perspective of the

teacher. The goal is to provide a basis for faculty from Colleges of Teacher Education to assess their teacher training program to determine the extent to which they currently teach the knowledge and skills teachers need to make effective use of consultation. This assessment is designed to promote changes in the teacher training curriculum which would add ideas about receiving consultation.

This module will provide a basis for developing courses and workshops designed to train teachers in the knowledge and skills necessary to take advantage of consultation. It is important to distinguish between receiving and offering consultation. This module focuses on the knowledge and skills necessary to be an effective recipient of consultation; it is not designed to be a stimulus for developing courses or workshops which provide training to those who would offer consultation. In addition to presenting the didactic information which is necessary for this training, some sample simulation activities are included which teacher educators may wish to include or modify for their training programs.

Objectives of the Module

Upon completion of this module the teacher educator will be better able to:

1. Describe the rationale which underlies the use of consultation as a model for the delivery of special services in schools.
2. Define consultation including consultation based on direct service, indirect service to the child, service to the teacher, and service to the organization.
3. Identify the stages which typically occur in the consultation process.
4. Identify the important process variables involved in the interaction between consultant and teacher.
5. Identify the consultant's role in the consultation process.
6. Identify the teacher's role in the consultation process.
7. Identify those skills which the teacher must use to facilitate successful consultation.
8. Identify those factors in the school environment which may interfere with teachers seeking consultative help.
9. Assess teacher training programs regarding the adequacy of their efforts to train prospective teachers in the use of consultation.

Reasonable Objectives for Teacher Education

Students in teacher training programs should have knowledge, practical skills, and professional commitment to the following areas relating to consultation:

1. Understanding the rationale for using a consultation model for the delivery of special services.
2. Understanding 4 types of consultation (consultation based on direct service, indirect service to the child, service to the teacher, and service to the

organization) including the recommendations likely to result from each type.

3. Understanding the circumstances in which each of the four major approaches to consultation are most appropriate.
4. Understanding the stages which occur typically in consultation.
5. Understanding those process variables which influence the successful interaction between consultant and teacher.
6. Understanding the consultant's role in the consultation process.
7. Understanding the teacher's role in the consultation process.
8. Understanding those factors in schools which can inhibit teachers from seeking consultation.
9. Being motivated to seek consultation when needed.
10. Understanding the techniques teachers can use to facilitate effective consultation.
11. Possessing the skills to facilitate effective consultation.

Rating Scale for the Teacher-Training Program

A. Check the level that best describes your present teacher education program on the topic of consultation.

___ 1. Students in preparation for teaching have no awareness of the availability of consultative support from special services personnel. They believe that any problems they encounter should be handled on their own without outside help. They believe that the only requests they should make of special services personnel (e.g., school psychologist, speech and language pathologist, learning consultant, etc.) are for testing that leads to special class placement or direct interventions such as counseling.

___ 2. Students in preparation for teaching are aware that special services personnel sometimes provide consultation to regular classroom teachers. They believe that this generally occurs only when a child has been tested and found ineligible for placement in a self-contained special education class. They are not aware that they can request consultative support for children who will be maintained in their classroom.

___ 3. Students receive some consultation during training and they receive some exposure to the research literature relevant to assessment and treatment of learning and behavior problems. However, they lack systematic structured knowledge about consultation or their role in consultation and they have received no training regarding consultation skills.

___ 4. Students in preparation for teaching have had broad didactic training in consultation, including the knowledge base underlying consultation and the teacher's role in consultation. However, they receive essentially no training regarding the skills of consultation and they receive consultation during their training in an inconsistent manner.

____ 5. Students in preparation for teaching have had broad didactic training, extensive skill training and a systematic opportunity to receive consultation services during training. These students understand both didactically and experientially the importance of a consultation model for the delivery of special services indirectly to children.

Self-Assessment

This self-assessment device is designed for the teacher trainer to determine his/her knowledge regarding consultation. This same test could be used to assess the knowledge of a teacher in training or a regular classroom teacher.

A. Self-Assessment Regarding Consultation

For each of the following statements circle "T" if the item is true and "F" if the item is false.

T F 1. Under ideal circumstances school-based consultants are responsible for developing the specific recommendations which teachers are responsible for implementing.

T F 2. When the teacher refers a problem child (e.g., behavior problem, learning problem, speech and language problem, etc.), the consultant should first consider interventions directed to the school as a system rather than those focused on the referred child.

T F 3. Consultation and psychotherapy can be differentiated by the fact that in therapy there is a focus on feelings and the personal background of the teacher.

T F 4. The concept of pre-referral intervention is consistent with a consultation model for the delivery of special services since it is implied in the concept of Indirect Service to the Child.

T F 5. Consultation is proposed as a model for the delivery of special services indirectly to children because there is serious doubt about the effectiveness of interventions provided directly by special services personnel (e.g., counseling, psychotherapy, speech therapy, etc.).

T F 6. The intervention stage, where specific recommendations are provided, is the most frequently neglected aspect of the consultation process.

T F 7. When a teacher does not accept a consultant's recommendations the consultant's primary task is to persist in explaining the rationale until the teacher accepts the recommendations.

T F 8. In order for consultation to be successful it is necessary to gather a wide variety of data regarding the child. Formal, individually administered psychodiagnostic techniques with high reliability and validity should be one source of data.

T F 9. "Consultee-centered base consultation" and "service to the teacher" each describe essentially the same approach to consultation.

T F 10. The two primary intervention techniques of consultee-centered case consultation are direct confrontation and indirect confrontation.

T F 11. Behavior modification consultation is better conceptualized as "indirect service to the child" rather than consultation based on direct service.

T F 12. "Accurate Reflection of Feelings" (a scale developed by Alan Ivey) and "Accurate Empathy" (a scale developed by Robert Carkhuff) each reflect the same construct.

T F 13. Client-centered consultation is an approach to consultation which is based largely on principles of counseling developed by Carl Rogers.

T F 14. One important goal for the consultant can be to discuss the teacher's feelings in an effort to decrease the teacher's emotional involvement with the case.

T F 15. There are many instances where the consultant's primary goal is <u>not</u> to remediate the referred problem.

B. Answer Key to Self-Assessment Questions

1. F Consultation is most likely to be successful when the recommendations are developed jointly by the consultant and the teacher.

2. T There are many instances when the referral problem is best handled by remediating a system-wide problem, rather than remediating the specific referral.

3. F This statement is only partially correct. Both psychotherapy and consultation focus on feelings.

4. T Although the concepts of pre-referral intervention and indirect service to the child are not identical, they are highly similar. Both typically involve the development and implementation of interventions based on data gathered by someone other than the consultant.

5. T Although there are other reasons supporting the consultation model, this is one important reason.

6. F Although lack of good intervention procedures is often a weakness of school consultants, there is a tendency to omit the evaluation of intervention more frequently than any other stage of the consultation process.

7. F Although the consultant may restate the recommendation to make sure the recommendation is understood, the consultant should generally refrain from "convincing" the teacher to accept it.

8. F Formal psychodiagnostic techniques are one of the data gathering procedures that can be used in consultation. However, they are not always necessary for successful consultation, and they should not be used needlessly since this would be a waste of limited time.

9. T Although there are some differences in emphasis, consultee-centered case consultation and service to the teacher each refer to the same category of consultation techniques.

10. F Caplan only discusses indirect confrontation techniques.

11. T "Consultation Based on Direct Service" and "Indirect Service to the Child" are each categories of consultation. Behavior modification is most often conceptualized as "indirect service to the child" since behavior modification can be implemented without the consultant having any direct contact with the child.

12. T Accurate Reflection of Feelings and Accurate Empathy Scales both measure the construct of empathy.

13. F Client-centered consultation is part of Gerald Caplan's framework of Mental Health Consultation and was developed independently of Carl Rogers' approach to client-centered therapy.

14. T There are some problems which are exacerbated largely because of the teacher's emotional involvement with the case. In these instances the consultant's goal is to increase teacher objectivity.

15. T Although the consultant does want to help with the problem which has been referred, the primary goal is to help the teacher in such a way that many children will be helped both in the present and the future. These generalized effects are the most important goal in consultation. Therefore, sometimes the consultant responds to a problem of the system or the teacher rather than the immediate referral.

CONSULTATION SKILLS

This section of the module presents information on the following topics related to consultation: (1) The rationale for consultation, (2) an overview of the consultation model, (3) the stages of consultation, and (4) the process of consultation. It is important to note that while the purpose of this module is to develop the expertise of teachers who receive consultative help, these first four topics reflect the general literature on consultation. These sub-sections are written from the perspective of the consultant, since this is the way most of this literature has been written. However, the unique aspect of the module is its focus on the role of the teacher-consultee, and this receives particular attention in the last of section of the module, "Skills Necessary for the Consultee".

Please keep in mind, also, that the purpose of this module is to serve as a stimulus to encourage teacher training programs to devise a variety of approaches for preparing teachers regarding the skills needed to be a successful consultee. It is not intended to be a detailed course outline. Instead, the ideas presented should be adapted and developed as appropriate for each teacher training program. Consequently references are suggested which provide added information regarding each component of the module. Consistent with the goal of serving as a stimulus, some learning tasks which can be used to facilitate the process of teaching these skills are presented. These learning tasks are presented only as examples of the kinds of activities which might be used by the teacher-educator. They might be modified for a specific course structure or entirely different exercises might be developed as needed.

Rationale For Consultation

Consultation is a problem solving process which occurs between two or more professionals where one (the consultant) tries to help the other(s) (the consultee) maximize the academic, cognitive and socio-emotional development of the clients (e.g., students) under the consultee's care. In school consultation the consultee may be the teacher(s), administrator(s), other school personnel, or the school organization. The consultant could be a counselor, learning consultant, reading specialist, school psychologist, speech and language pathologist, another specialist. Consultation involves a voluntary relationship in which a current work problem of the consultee (e.g., teacher) is considered. The consultee has the freedom to accept or reject the consultant's ideas, and when consultation is effective and consultee learns to handle both current and future problems more effectively. Frequently the term consultation has been used to connote the expert who solves someone's problem for them. However, school consultation is different. It involves a collaborative relationship between two professionals who view themselves as colleagues and work to solve the problem together. Teachers who seek consultation should expect to work hard with the consultant in defining the problem and developing intervention plans.

The traditional approach to special services has been to remove the child from the regular classroom. Children have been removed for individual testing; they have been removed for special class placement; they have been removed for counseling; and they have even been removed for various forms of tutoring. In each of these instances the special service personnel (e.g., counselor, reading specialist, school psychologist or speech and language pathologist) provide services directly to the child outside of the regular classroom. The implicit

assumption is that the special service professional will be more effective with the child than the classroom teacher. However, this viewpoint has been criticized for many reasons: (1) These approaches generally are based on a medical model which conceptualizes the educational problem as an internal disease process. This model has received much recent criticism by those who argue that alternatives are needed which emphasize the impact of the environment. (2) The traditional interventions resulting from individual psychodiagnostic work with children (e.g., placement in special education classes, counseling and psychotherapy) are not predictably effective. Alternative approaches to intervention are needed and a consultation model offers the potential to develop such alternatives. (3) There is an inadequate number of specialists to provide help directly to all those children with special needs. (4) There is a need to develop approaches to the delivery of special services which have the potential to prevent the development of future problems. Consultation has the potential to prevent the development of future problems. Consultation has the potential to develop effective preventive approaches. (5) Specialists have a limited opportunity to influence the development of the child because the time of contact is so limited. Consider, for example, the speech therapist who meets with the student for one or two half-hour sessions each week, and compare this to the regular classroom teacher who has the opportunity to influence the child's speech or language for several hours each day.

The basic point is that there are not enough special class placements, counselors, speech and language pathologists, reading specialists, etc. to provide help directly and in an effective manner to all children who need help. Instead, these professionals must find realistic ways to translate their skills so that regular classroom teachers, who have continuous contact with the child, can

intervene effectively with the children in their classes. This approach offers an opportunity for services to be provided to more children in a more effective manner.

The Consultation Model

During the past ten years a growing number of professionals have written about a variety of approaches to consultation. Among these are behavior modification, mental health consultation, and organizational consultation. One model has been developed which seeks to integrate these different approaches (Meyers, Parsons & Martin, 1979). This model is based on a 5-part conceptualization of the delivery of special services in schools which vary in terms of the degree to which services are provided directly or indirectly to the child. The first part of this conceptualization is referred to as "Testing and Direct Interventions with Children". This refers to those instances when the child is tested and/or receives tutoring, counseling or therapy, and when the information gained from this direct contact with the child is not used as a basis for consulting with the teacher. This approach is probably dominant among specialists in today's schools, and it is the one approach to delivery of special services that is not part of the consultation model. Generally it is used when the student's problem seems mystifying, classroom interventions are unsuccessful, and it is suspected that the child needs help outside the classroom (e.g., counseling, speech therapy, special class placement). While this can provide the needed help to some severely impaired children, it is relied on much too frequently in practice.

The five-part continuum of special services moves from this first approach which involves the specialist providing service directly to the child to other approaches in which the teacher or the school, itself, is viewed as providing the service to the child. The first category of service, Testing and Direct

Interventions with Children, does not involve consultation since the specialist provides intervention in lieu of the teacher or school.

The consultation model presented in this module conceptualizes consultation in terms of the remaining four categories of service: Consultation Based on Direct Service, Indirect Service to the Child, Service to the Teacher and Service to the Organization. The model is unique in that it stresses the more indirect approaches to service delivery (e.g., service to the teacher or service to the organization).

Level I is Consultation Based on Direct Service. This is a form of consultation based on the individual diagnostic techniques used most frequently by specialists in schools. By testing or observing the child, the consultant develops hypotheses which result in intervention ideas that the teacher can implement. While the data gathering process is based on direct contact with the child, the interventions are carried out by the teacher. The assessment techniques used might include psychodiagnostic techniques such as individual tests of intelligence, adaptive behavior, speech, language, personality, reading, and direct classroom observation. This approach differs from "Testing and Direct Intervention with the Child" because the data are used to develop interventions which are implemented by the teacher. Only when the data are used to help teachers (or other school personnel) devise appropriate strategies designed to promote the development of the child can these individual testing procedures be considered as part of consultation. Further, these strategies must be devised by the consultant and teacher in face to face meetings in order to consider this as consultation. More details about the psychodiagnostic approach to consultation can be obtained from the following sources: Blanco, 1972; Blanco & Rosenfeld, 1978; Meyers, Martin & Hyman, 1977; Meyers, Parsons & Martin, 1979.

Level II is Indirect Service to the Child and as implied by the title it represents a more indirect approach than Level I. When using indirect service techniques, the consultant is still focused on the child referred by the teacher, but someone other than the consultant gathers the data. For example, the teacher or a classroom aide might gather the data used as a basis for defining the problem. Similar to Level I the teacher rather than the consultant carries out the intervention derived from consultation and a frequent example of this approach is a behavior modification plan designed to reduce disruptive behavior based on data gathered by the teacher. This is often an economical and efficient use of the consultant's time, since time spent gathering data directly from the child is avoided by the consultant.

One important feature of this approach to consultation is that the teacher is likely to help gather the data regarding the child. This means that there must be an emphasis on some assessment techniques that are practical to use within the context of the teaching process. Therefore, as the teachers learn evaluation skills for this type of consultation, they will also learn skills which might be applied in other circumstances without the consultant. This would lead lead to the realization of an important goal of consultation, that is to transfer its effects to other current as well as future situations, since the teacher would now be more likely to solve some problems on his or her own with these new assessment techniques.

There are several intervention techniques which might be recommended by consultants providing indirect service to the child, and some of these same techniques are occasionally recommended during Level I consultation. One type of recommendation might include the use of reinforcement contingent on appropriate behavior (e.g., task oriented, non-disruptive behavior) where a wide range of

reinforcers and systems of reinforcement have been demonstrated to be effective: social attention by the teacher, permission to engage in preferred activities such as recreation, privileges, concrete rewards such as stars or food, or token economies (Axelrod, 1977). Consistent with the behavioral notion of shaping, recommendations are likely to include a series of gradual steps (Kuehnel & Kuehnel, in press). For example, rather than recommend that the teacher implement a classroom strategy immediately, the consultant might use a structured role play technique and provide feedback to the consultee before carrying out the technique in the classroom. This is similar to the micro-consultation approach developed by Goodwin, Garvey & Barclay (1971). Another approach is for the consultant to observe the teacher implementing the plan in the classroom and provide immediate feedback to the teacher either in verbal or written form. Yet, another intermediary technique is for the consultant to use modeling by demonstrating the technique in the classroom. Sometimes a consultant may choose to employ combinations of these techniques.

Indirect service to the child may be used in response to a variety of referrals. These include behavioral, socio-emotional, academic, speech, language, etc. One recent promising line of work focused on academics has been to use the amount of the student's time engaged in instructional tasks as the criterion (Bergan, in press). More detailed information about the variety of techniques associated with Indirect Service to the Child can be obtained from the following references (Axelrod, 1977; Bergan, 1977; Bergan & Schnaps, in press; Kuehnel & Kuehnel, in press; Meyers, Martin & Hyman, 1977; Meyers, Parsons & Martin, 1979; O'Leary & O'Leary, 1972; Sulzer-Azaroff, McKinley & Ford, 1977).

Level III is Service to the Teacher. The consultation model conceptualizes the teacher as a central environmental factor with an important effect on each

child. Since there are occasions when the teacher's lack of knowledge or lack of confidence may interfere with effective teaching, sometimes the most efficient consultation strategy will be to help the teacher directly. The other approaches to consultation (e.g., Level I and Level II) can also help to improve the teacher's general functioning. However, Level III (Service to the Teacher) is distinct because the primary goal is to promote change in the teacher's behavior and/or attitudes rather than the child's. Thus, Level III consultation represents a more indirect form of service to the child, and it is consistent with a preventive orientation.

The primary methods designed to provide service to the teacher are derived from Gerald Caplan's (1970) consultee-centered case consultation techniques. The consultant interviews the teacher in depth concerning a school related problem in an effort to determine whether the problem is one requiring Service to the Teacher. This approach to consultation might be selected when the teacher and the consultant agree that the teacher has a lack of knowledge, lack of skill, lack of self-confidence, or lack of objectivity. When the teacher lacks relevant knowledge or a particular skill, the consultant's goal would be more didactic and there would be an effort to teach the necessary knowledge or skill. In skill development particularly, the consultant would use shaping techniques similar to those mentioned earlier. In addition to structured role play techniques, there would also be direct classroom observation with specific feedback for the teacher-consultee.

When lack of confidence is judged to be the problem and neither knowledge nor skill are involved, the consultant's primary goal would be to provide emotional support and encouragement to the teacher. Although this can be a simple form of intervention, there are many instances where it can have a significant effect by giving the teacher confidence to act. For example, a teacher who was faced

with a child who had emotional problems felt incompetent to work with this child because of her lack of training or experience with emotionally disturbed children. Consultation supported the teacher in implementing the excellent ideas she already had (e.g., helping the child to play with dolls as a means of expressing feelings) but was afraid to use with this child. Lack of objectivity may be the least obvious reason for consultation focused on the teacher and it is based on the notion that there are some occasions where the teacher's emotional involvement can interfere with effectiveness. Typically this can occur with any professional who temporarily fails to maintain proper professional distance, which results in clouded professional judgement. Lack of objectivity can occur when the teacher identifies with his or her students, when the teacher has a conflict about authority, or when the teacher has difficulty recognizing and expressing anger. When it is concluded by the consultant and teacher that these conflicts exist, then the consultant can discuss this directly with the teacher in a supportive manner designed to help the teacher become more aware of and develop a clearer understanding of the effects this conflict has on his or her teaching. As a result of this discussion the teacher and consultant generate alternative strategies for the teacher. Since this deals so directly with the teacher's feelings, it can generate resistance, especially when implemented too early in a consultative relationship.

Sometimes people confuse consultation with counseling or psychotherapy, and this is particularly likely when the teacher's lack of objectivity is determined to be the problem. However, consultation and therapy are different techniques, and psychotherapy is not an appropriate technique for one professional to use with another professional in the same organization. One way to differentiate the two techniques is that the focus of consultation remains clearly on the <u>current work problem</u> and it does not seek to remediate personal problems associated with

issues outside of the school situation. In one example, when the teacher's classroom management problems resulted from her conflict about assuming the role of the authority in the classroom, consultation involved a discussion of the teacher's feelings about authority. However, this discussion was always focused clearly on the authority problem in school, rather than bringing up non-professional issues related to authority (e.g., relationships between the teacher and her parents).

At this point, it may be useful to consider Level III Consultation in terms of the definition of mental health consultation which was presented earlier. This definition suggested that consultation is a problem solving process between a consultant and consultee (teacher) designed to benefit students. Based on this triadic model, mental health consultation often involves the consultant and teacher discussing a specific student(s). While Level III consultation can be conducted in this manner, it can also involve discussions focused directly on a concern of the teacher without reference to a specific child. The prior example of a teacher's conflict over being the authority figure is a good example of Level III consultation where the discussion focused clearly on the teacher.

Level IV is Service to the Organization and this approach is the most indirect form of service to the child. Anyone who has attempted to intervene in schools has experienced organizational factors which interfere with the effectiveness or even the implementation of various interventions. Frequently the consultant's primary task must be to modify the organizational structure or climate of the school. Although it is the most indirect way of affecting the child's behavior there are some situations where it is the most effective consultation intervention.

For example, the author once consulted to a school in which two children died

within a one month period. Although the staff and students throughout the school were upset and distracted by these events, cultural taboos interfered with discussion of the problem. In this atmosphere the consultant's recommendations about specific students were to no avail since teachers were unable to focus on such specific intervention strategies. After the consultant provided organizational consultation to help the school cope with bereavement some referrals disappeared while others could then be consulted on in an effective manner. (More details about this example are provided in Meyers & Pitt, 1976).

In addition to helping a school organization cope with specific crises such as the one described above, service to the organization often requires assessment and remediation of more generalized communication barriers. The result should be a school organization which is more successful in meeting its goals. The basic techniques include: (1) interviews and surveys to gather data from a range of personnel in the organization; (2) feedback to the organization regarding the data obtained to reach consensus about the important findings; and (3) a problem solving process whereby the organization develops intervention plans. There are several sources which provide a detailed consideration of the techniques which may be associated with this category of consultation (e.g., Meyers, Parsons & Martin, 1979; Schein, 1969; Schmuck & Miles, 1971; Schmuck & others, 1972) and an example of a survey instrument which was used for this approach to consultation is reproduced in the appended article by Lennox, Flanagan & Meyers, (1979).

A Learning Task Regarding the Four Levels of Consultation

When teaching a component on the four levels of consultation it is useful to stimulate small group discussions.

(1) Break the class into groups of about four students each (there should be at least four groups so that there is at least one group to discuss each approach to consultation.

(2) Assign each group to one of the four levels and ask them to discuss the approach with two goals: to determine under what circumstances they would seek the approach; and to raise a series of questions about the practical implications of the approach.

(3) Ask the group to select a recorder/reporter.

(4) After the small groups have had about 15 minutes of discussion reconvene the entire class and ask at least one representative from each group to report the results of their discussion.

Consultation Stages

Consultation involves a series of stages. The first stage is to negotiate a consultation contract. The consultant must negotiate a clear contract with the organization and with the consultee. The purpose is to make certain there is clear agreement as to the variety of services which might be provided by the consultant. First the contract for potential services must be negotiated with the school administration, but after that is accomplished, an informal contract must be negotiated with each teacher who receives consultation. It is important that each teacher who receives consultation is made aware of the consultation services which might be provided. However, the informal nature of this contract must be stressed since it is developed and continually revised as part of the discussions which occur during consultation. At all times during consultation either the consultant or the teacher may wish to initiate a new aspect of consultation, but the teacher retains the freedom to reject any aspect of consultation.

The second stage is problem identification. During this stage the consultant decides which level of consultation is most appropriate to the referral. (These levels are defined in some detail above and information about how to determine the appropriate level is presented below). Generally the consultant

should choose to work at the most indirect level of service that is appropriate to the case. The third stage is problem definition. During this stage the consultant and teacher(s) develop a detailed definition of the problem. As one part of problem definition relevant data are generally gathered by the teacher, consultant and/or someone else involved in the case. During this stage the consultant will request specific descriptions of the problem, rather than accepting vague, general descriptions. A critical aspect of this phase is that the consultant and teacher must reach consensus on the problem definition.

The fourth stage is the point where intervention strategies are developed and implemented. The teacher and consultant both work together to develop these strategies. However, the teacher is generally responsible for implementation. The one exception to this occurs when the consultant implements the approach initially in order to model it for the teacher. In some instances observing someone first makes it easier to carry out the strategy. The fifth stage is the evaluation to determine whether change occurs. To some extent evaluation goes on throughout consultation. However, it is stressed during the fifth stage since it is essential to determine whether the intervention strategies are working. Basically, the same types of assessment strategies used during Problem Definition would be used to Evaluate the impact of consultation. This stage must be stressed because it is one of the components of consultation which is most likely to be omitted. The last stage is to conclude the consultation relationship. However, the teacher has the option to request further help from the consultant and the consultant will make periodic follow-up contacts.

One factor with a significant impact on consultation has to do with

whether the consultant comes from inside or outside the system. For example, it would be possible for a consultant to provide these services in a school from some external agency such as a community mental health center or a University. However, most frequently these services are provided by special services personnel in the school district. Whether the consultant is internally or externally based, it will be beneficial to follow the stages which have been outlined above. Further, while external consultants often provide all four categories of consultation, internal consultants most frequently offer Level I and Level II and encounter greater resistance to offering Level III and Level IV consultation as indicated by the case demonstration of the flow chart which is presented later.

A Flow Chart for Implementing the Consultation Model

Consultation is a dynamic process which involves a series of stages. At the beginning the consultant must negotiate a contract with the organization which will determine, in part, which of the four levels of consultation the consultant is sanctioned to provide. While this model includes four levels of consultation which should all be offered under ideal circumstances, there are many schools which will not permit consultation at all four levels. Many school districts will not readily accept the more indirect approaches to service. For example, "Service to the Organization" (Level IV) frequently is not a sanctioned part of the school consultant's role, while most districts will willingly approve "Consultation Based on Direct Service" (Level I).

In every consultation case it is important to decide which of the four levels of consultation will be used. The preventive goal of influencing the largest possible number of children suggests that the consultant should use the most indirect approaches which promise to be effective and which are

sanctioned by the school.

Since organizational factors can interfere with any consultation intervention, Service to the Organization (Level IV) should be the consultant's first choice when there are system level problems affecting the referral. If organizational factors are ruled out then the preventive model suggests that teacher-related difficulties be considered, and Service to the Teacher (Level III) would be the consultant's next choice. If teacher-related problems can be ruled out, the most indirect intervention would be Indirect Service to the Child (Level II). The teacher would implement intervention procedures which do not require that the consultant spend time in direct contact with the student. In those cases where Indirect Service to the Child cannot provide meaningful help the consultant would use Consultation Based on Direct Service (Level I). Although Level I can be a time consuming approach to the delivery of services to children, there are some problem situations where the consultant needs to observe the child directly with systematic observation techniques and/or formal diagnostic techniques in order to develop effective intervention procedures. The flow chart depicted in Figure 1 demonstrates the integrated view of consultation which incorporates the above decision-rules about the level of service.

Two points should be emphasized regarding the flow chart: (1) After negotiating a contract with a local school administration the consultant might not receive sanction to work at some of the higher levels depicted in the chart (e.g., Level III or Level IV). In these instances the consultant would begin by responding to referrals at the highest level permitted by the administration that is appropriate to the particular consultation problem. The important factor to bear in mind is that the consultant (or the consultee)

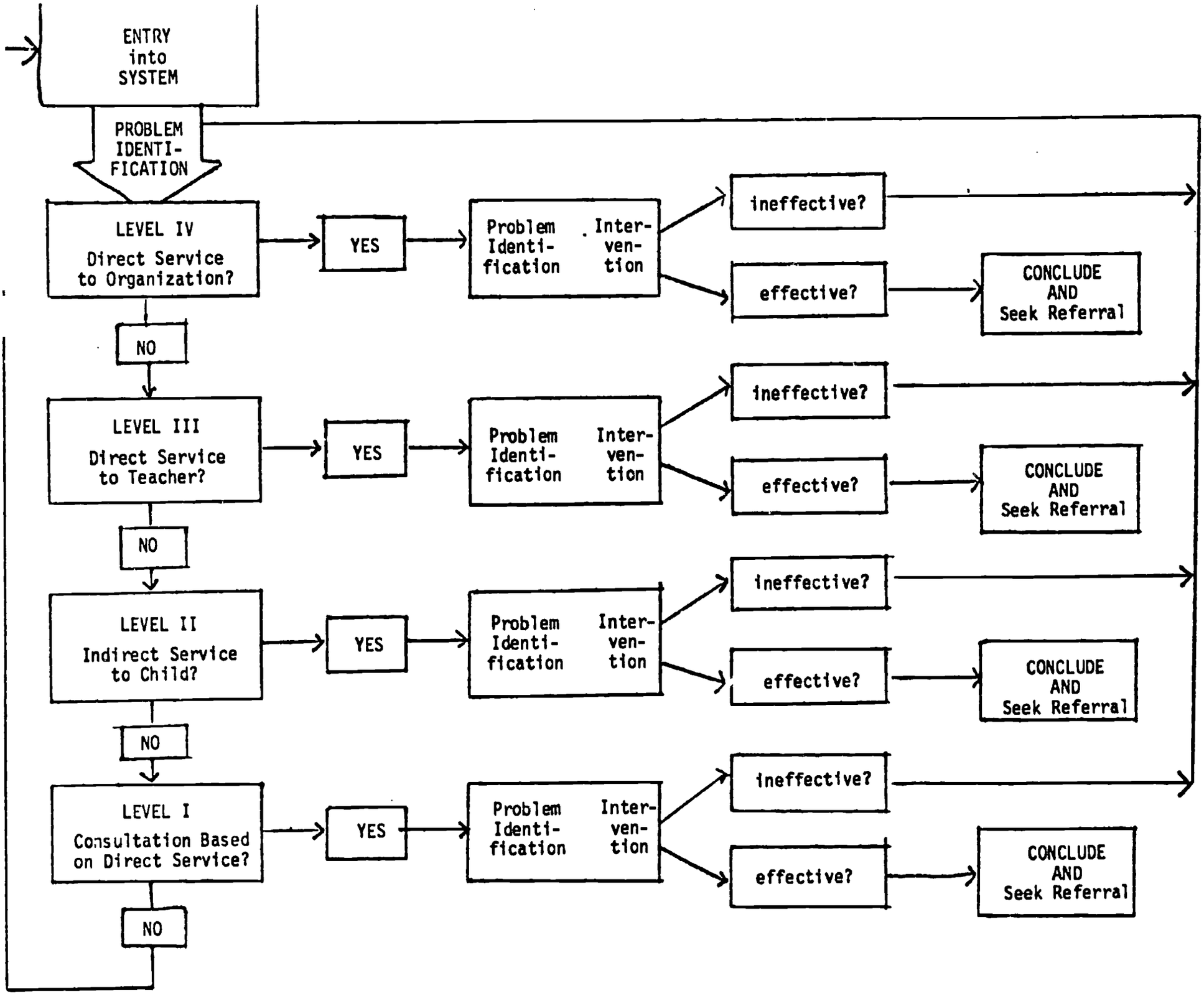

Figure 1. Stages of consultation process.

always has an option to renegotiate the contract in order to gain sanction to function at higher levels. (2) Eventhough this model stresses the most indirect consultation approaches as indicated in the flow chart, this does not preclude working at the lower levels on the chart. Even in those instances where the consultant begins working at Level IV (Service to the Organization), after the organizational problem is solved there may still be an individual child who presents difficulties in the classroom. Under these circumstances the consultant might use consultation techniques which are focused more specifically on the child's individual problem. For example, the consultant might attempt to resolve the child's difficulties by using Level II techniques (Indirect Service to the Child). Further, in practice there will be instances when the consultant works simultaneously on more than one level. The process of consultation can keep changing in this way as the consultant may move from a high level to a lower level on the flow chart for related consultation cases.

Learning Task: Case Demonstration of the Flow Chart

1. When presenting the consultation model it is important to present one case which demonstrates the dynamic way in which the model can work moving from one level of consultation to another.
2. The instructor can use any case he or she is familiar with which serves to dramatize the model. As an example, a case is presented below based on the author's consulting experience, and if the instructor does not have a personal example this one may be presented to the class. An article which presents this case in more detail is included in the references (Meyers & Pitt, 1976).

On the occasion in question the author served as a school psychologist consulting to a parochial school containing grades kindergarten through eighth. This school was located in a small-town parish located near a large city. The school included

14 classroom teachers, 3 supplementary teachers, and 422 students in addition to the psychologist who worked there one day per week. Many students had one or more siblings at the school and the parish had a stable population of families who had attended the same church for years. The members of this parish knew each other well.

The initial consultation contract had been negotiated informally with the school principal. Level I (Consultation Based on Direct Service) and Level II (Indirect Service to the Child) were the only sanctioned consultation procedures, and it was understood that the consultant's primary activity would include Indirect Service to the Child rather than testing.

During one school vacation a sixth grade boy dies a tragic, accidental death. The school sent condolences to the family, but made no official response within the school. As a result teachers were uncertain how to handle the situation, and discussion with students was frequently avoided at this time. Within a month a seventh-grade boy was injured fatally in a car accident.

In a period immediately following the deaths several new problem behaviors were observed. (1) There was an increase in the number of children sent to the principal or referred to the consultant as discipline problems, and it was reported that acting out, lying and other disruptive behavior had increased. Further, several efforts to consult with teachers about reducing their discipline problems (i.e., Level II consultation) were unsuccessful, and the problems just mounted. (2) There was a series of bomb scares at the school with at least some connection to the deaths. The boy responsible for the last bomb scare was caught and he had been a friend of one of the deceased children. Projective testing and analysis of dream material revealed a clear emphasis on fantasies about the friend's death. Following testing, the consultant recommended counseling for the boy and a sensitive, supportive approach by the teacher (Level I consultation). These recommendations

were rejected initially. The principal indicated that the child should be expelled from school, and the teacher reported that he could not be supportive and reinforce such negative behavior. (3) There was an increase in superstitious rumors and fantasies among the students. When the kindergarten teacher reported to the consultant that her students had "seen" parts of the boys' bodies in the dark church basement, the consultant set up a meeting with the principal.

In this meeting the consultant pointed out the effects the deaths were having on the children's behavior. The consultant pointed out, further, that as a result of this system wide problem, his efforts at Level II consultation had been unsuccessful. In other words it was suggested that the crisis over the deaths interfered with his ability to help the teachers with classroom management. In effect, the consultant "renegotiated" the consultation contract so that Level IV consultation (Service to the Organization) could be used to help the school deal more effectively with the bereavement process.

It was agreed that a teacher workshop on this topic would be the most effective way to help the school cope with this crisis (Level IV consultation). Two goals were set for the workshop: (1) to help the teachers understand that the increase in disturbing behaviors might be part of the bereavement process; and (2) to help the teachers encourage students to express their feelings about death and related issues. Following this Level IV consultation the system was more effective dealing with the process of bereavement. Several teachers indicated their positive experiences discussing feelings about death with their classes and there was a decrease in discipline problems.

As noted earlier, this organizational problem (the crisis regarding bereavement) had interfered with effective consultation using Level I (the bomb scare student) and Level II (classroom management regarding discipline problems). Subsequent to the workshop those teachers who referred disruptive children were able to concentrate

on the recommendations and consultation returned to its previous level of effectiveness. Similarly, the Level I (Consultation Based On Direct Service) consultation regarding the youngster who had made the bomb scares was now successful. Soon after the bereavement workshop the principal volunteered her revised opinion that the youngster should be maintained in the school and the teacher agreed that perhaps he could provide the needed support and positive relationship for this youngster.

Another significant change began to occur after the organizational consultation. Teachers began to bring their own professional problems to the consultant rather than being limited to discussions of specific cases (i.e., Level III consultation). As a result the consultant met with the principal, indicating this general trend without revealing teacher names. At this point the principal was able to see the potential value of the consultant responding to these teacher needs, and she willingly sanctioned Level III consultation (Service to the Teacher).

The Process of Mental Health Consultation

All consultation relationships involved an interpersonal process, and the interaction between the consultant and teacher can influence the outcome of consultation. Regardless of the level of consultation, the most carefully conceived recommendations are not likely to succeed if the consultation relationship is marked by difficulties. The interpersonal process is particularly important to minimize the effects of resistance.

Any professional who has consulted in schools has experienced resistance to his or her interventions, and teachers also understand resistance in terms of their experience with parent conferences. Often teachers have encountered parents who were resistant to the teacher's ideas, unable to listen to the teacher, and destructive within the relationship. Inertia regarding any form of change or new idea is a natural phenomenon. Consider the resistance which is often encountered when a teacher taking a University course tries to bring the new ideas from the

course to the rest of the faculty. Any teacher or school professional who has experienced this phenomenon has a realistic idea about how resistance is a part of school life.

Eventhough a person may recognize the existence of a problem initially, frequently that person will respond defensively and deny responsibility for the situation. Similar to any person seeking help, the teacher is likely to consider external factors as causing the problem rather than accepting the "blame", and this can be referred to an externalization. A primary goal of consultation is to help the teacher recognize and accept his or her responsibility for the problem. If the teacher recognized his or her contribution, then change strategies will be available over which the teacher has maximum control. In effect the goal is to help the teacher develop a feeling of ownership for his or her part in the problem which will result in meaningful interventions. However, blaming the teacher is not the consultant's intention.

While teacher resistance is a factor which often interferes with consultation, it is a dynamic process which changes depending on the situation. The sections which follow indicate some factors related to the process of consultation which can affect resistance. However, teacher characteristics such as the teacher's developmental level can also affect resistance, and this will be discussed before specific approaches to the consultation process are considered.

Katz (1977) has described the following four stages which she feels are experienced by most teachers: (1) Stage I is the Survival Stage, the period in which discrepancies between anticipated success and classroom realities intensify feelings of inadequacy. (2) Stage II is the Consolidation Stage, when the teacher consolidates gains and differentiates tasks and skills to be mastered next. (3) Stage III is the Renewal Stage, when the teacher gets tired of doing the same old things and seeks out developments in the field, new approaches, etc. (4) Stage IV is the

Maturity Stage, when the teacher comes to accept his or her approach to teaching. Although these stages may overlap and may not occur neatly in a fixed sequence, it is useful for the consultant and consultee (teacher) to be aware of them.

Although there are no data available, several hypotheses can be raised about how these sorts of stages affect resistance in consultation. (1) Perhaps many new teachers are so concerned with survival factors that they would have difficulty asking for help or profiting from consultation. (2) Perhaps the maturing teacher is comfortable enough about his or her role as a teacher to be able to profit from consultation and show minimal resistance. (3) Perhaps teachers who have reached the stage of maturity are so fixed in their role and reluctant to admit weakness that they would express more resistance to consultation. Presenting stages in such a way teachers may become more aware of the effect of their own emotional states on their willingness or reluctance to engage in an otherwise primarily professional activity.

Another factor related to the concept of resistance is that frequently the intense nature of the interaction between consultant and teacher creates anxiety on the part of the consultant as well as the teacher, and as a result there are occasions when the consultant may resist helping. It is important that the consultant and consultee maintain an awareness of this possibility in order to be maximally facilitative. The interpersonal process in consultation is frequently as important as the nature of the problem or the quality of the solutions.

A variety of approaches exist for structuring the consultation relationship; among these are behavior modification, transaction analysis, social psychology, outgrowths of Rogerian counseling, and research on the diffusion of innovations. (For more details about the process of consultation see Meyers, Parsons & Martin, 1979). Due to space limitations, this presentation will consider 3 approaches to the consultation process (the collaborative model, derivatives of Rogerian counseling,

and research on conflict resolution). There is no intent to imply that these are the best approaches to the consultation process. However, they are presented here because there is a developing data base relevant to each approach.

The Collaborative Model of Process. One factor which is frequently considered an important part of the consultation process is the notion that consultation is a collaborative effort between two professionals (Caplan, 1970; Curtis & Anderson, 1976; Meyers, 1973). This concept derives directly from Caplan who has stated that to be effective a consultant must conceptualize the relationship as an interchange between colleagues. This can occur if the consultant views the teacher as the person with expertise in teaching, while the consultant has expertise regarding mental health. According to this assumption the goal should be for the consultant and teacher to share their expertise in a collaborative manner so that the teacher's students will benefit.

When the consultant uses this approach he does not tell the teacher what to do. Rather than present detailed recommendations to be implemented as stated, the consultant should expect the teacher to be actively involved in developing or modifying the strategy, or in developing an entirely different plan. This approach suggests that the consultant communicate clearly that the teacher has the freedom to accept or reject the consultant's recommendations.

This principle is an important part of theory about mental health consultation and there have been a few beginning efforts at relevant research. Taken as a group, the data from these studies suggest that consultation will be more effective if the consultant and consultee interact in a collaborative manner (Curtis & Zins, 1978; Freidman, 1978; Ritter, 1978; Wenger, 1979). However, there are not yet enough data to make firm conclusions.

Derivatives of Rogerian Counseling. Carl Rogers' ideas have had a widespread

impact on applied psychology, and his proposition that several core conditions are necessary for successful psychotherapy has particular relevance for consultation. These conditions which were defined initially by Rogers (1957) have been elaborated by others (e.g., Carkhuff, 1969a,b; Egan, 1975; Gazda et al., 1973). Operational definitions have been developed for three conditions which appear relevant to consultation (genuineness, non-possessive warmth and accurate empathy), and there has been ample demonstration that they involve skills which can be trained.

Genuineness occurs in a consultation relationship if the consultant is free to be him/herself. The genuine consultant acts in an integrated, authentic fashion, in which verbal and non-verbal cues both communicate the same feelings. This does not imply that the consultant always communicates feelings to the teacher, as there will be occasions when the consultant chooses freely not to express feelings during consultation. The key is that this decision should be made in light of the consultant's awareness of his or her feelings. The consultant who is genuine strives to remain non-defensive and does not retreat into a professional facade.

Non-possessive warmth occurs when the consultant accepts the teacher without imposing conditions on the teacher for this acceptance. For example, the consultant would value the teacher as a person without evaluating or imposing conditions on the teacher's behavior. This does not imply unconditional approval of any teacher behavior. Instead it suggests that regardless of the consultant's reactions to the teacher's behavior (whether positive or negative) there is always a basic sense of respect and acceptance for the teacher as a person.

Accurate empathy occurs when the consultant is able to understand the world through the teacher's eyes. The empathetic consultant understands the teacher's feelings and the meaning of the teacher's experience. A key element to this concept is that the consultant must be able to communicate this understanding to the teacher

in a genuine way which is not patronizing.

There has been very little research about the impact of these process variables in consultation and most of it has focused on variables similar to empathy. The work that has been completed to date suggests a positive relationship between the construct of empathy and consultation outcome (Martin & Meyers, 1980; Meyers, 1978; Schowengerdt, Fine & Poggio, 1976; Wilcox, 1977), however, there is a need for more research.

A Learning Task Focused On Empathy

According to each of the three views of the consultation process which were presented, the consultant must have good listening skills. This point can be taught most readily to prospective teachers by training them to assess their use of empathy -- which is one important listening skill. For the purposes of this exercise use the scale for assessing accurate reflection of feelings which is presented in the Appendix. This scale is adapted from one that was developed by Alan Ivey for training counseling skills, it measures the construct of empathy, and it is particularly applicable to consultation. (More detailed information about this scale can be obtained from the following sources: Ivey, 1971; Ivey & Gluckstern, 19-74).

1. Go over the entire scale with the class to ensure understanding.
2. Spend ten minutes role playing a consultation interview. The teacher-educator should play the consultant role and someone from the class should take the role of consultee. Rather than actually role playing, this exercise usually works best when the consultant does a real interview with someone taking the consultee role who is willing to discuss a real problem. This session should be audio-taped.
3. After it is complete, replay the session and have the class rate the consultant's statements for accurate reflection of feelings.

4. Have the class discuss the ratings and the types of empathic behaviors they observed.

5. This same exercise can be expanded by having several people from the class work as consultant-consultee pairs and then assessing the tapes of these interviews for accurate reflection of feelings.

Research on Conflict Resolution. Morton Deutsch is a social psychologist who has conducted research on conflict resolution which has important implications for the consultation process (Deutsch, 1949; 1960). He has discovered 2 characteristics which are relevant to conflict resolution: cooperativeness and competitiveness.

He described cooperativeness as including the following characteristics and behaviors: egalitarian, trusting, open-minded, tolerant of ambiguity, high scores on scales measuring empathy, respect and genuineness, a favorable view of human nature, and communication which is open and honest. According to Deutsch a cooperative relationship occurs when each person expects and depends on rewards that are mediated by the other person.

The description of competitiveness includes the following characteristics and behaviors: aggressiveness, authoritarianism, need for dominance, suspiciousness, exploitive nature, a lack of or misleading communication, and a tendency to impose solutions. Deutsch has found that competitive relationships are those where each person expects and fears a punishment or loss mediated by the other person.

These dimensions have implications for consultation and particularly for resistance in consultation which are depicted in Figure 2. Although these implications are based on Deutsch's laboratory research on conflict resolution, they are presented in terms of consultation. To understand this chart it is important to recognize that in consultation a consultee or consultant who exhibits competitive behavior would be viewed as resistant.

	Consultee Behavior	Consultant Behavior	Outcome in Consultee
1.	Cooperative	Cooperative	Approach consultant's ideas
2.	Cooperative	Competitive	Withdrawal from consultant (a form of resistance)
3.	Competitive (resistant)	Competitive	Attack consultant's ideas (a form of resistance)
4.	Competitive	Cooperative	Attack followed by approach (resistance abates)

Figure 2. Resistance and the cooperative/competitive dimension

The figure depicts four possible consultation relationships. In the first, a consultee with cooperative behavior receives consultation from a consultant with cooperative behavior. The result is that the consultee is swayed toward the consultant's ideas (approach), which should increase the probability of successful consultation. The second relationship involves another consultee with cooperative behavior, but in this instance the consultant responds in a competitive manner. The result is that the consultee (teacher) withdraws from the relationship. The consultant's competitive behavior stimulates resistance from the consultee. The third relationship involves a competitive (resistant) consultee (teacher) who encounters a competitive consultant. The result of the consultant's competitive style is increased resistance which is expressed directly to the consultant by the consultee. The last relationship involves a competitive (resistant) consultee (teacher) who receives consultation from a consultant using cooperative behavior. As a result, the teacher's resistance reduces followed by an acceptance of the consultant's ideas.

There are two important implications of this view of the process. (1) Cooperative behavior on the part of the consultant or teacher can facilitate successful consultation. (2) When faced with resistance effective consultants make special effort to respond with cooperative behavior eventhough competitive behavior is the more natural response. This in turn tends to reduce the teacher's resistance to consultation.

A Learning Task Regarding the Cooperative/Competitive Dimensions

1. Show the class how there are four possible combinations of competitive and cooperative styles for the consultant-consultee pair (see Figure 2).
2. Have the class brainstorm the possible effects these four combinations would have on consultation.

3. Break the class into four groups, one responsible for each of the four combinations from Figure 2. Each group will receive the same scenario describing a typical consultation such as a discipline problem.
4. The task for each group will be to generate a script depicting a hypothetical conversation between a consultant-consultee pair based on the combination of cooperative/competitive dimensions to which they have been assigned.
5. Each group can role play their script for the remainder for the class (choosing one person to play the consultant and one to play the teacher). The role plays would be followed by class discussion.

Skills Necessary for the Consultee

This section is based on the general discussion of consultation which occurred earlier and it describes several ways in which the knowledge base for consultation can be translated into skills necessary for the teacher to contribute to successful consultation. This is the unique feature of this module, since it considers the role of the teacher in facilitating consultation, rather than assuming that only the consultant has this power.

(1) Contract Negotiation and Problem Identification

One important factor necessary for effective consultation is to develop a clear contract about what consultation services will be offered. It is crucial that both the consultant and consultee have the same understanding as to what services will be provided. One way to conceptualize the kinds of services which might be offered is through the consultation model described earlier. The teacher must have a clear understanding of the four different categories of consultation service which are possible (i.e., Consultation Based on Direct Service, Indirect Service to the Child, Service to the Teacher, and Service to the Organization). Based on this

knowledge the teacher is in a position to determine whether the consultant is offering the most appropriate services. The teacher should feel free to indicate which approach is felt to be most appropriate to the problem, and the teacher should be an active participant in negotiating the services to be provided. Further, since not all consultants will have received training in this model of consultation, it will sometimes be important for the teacher to explain to the consultant how he or she views the levels of consultation. This process will help to ensure that the consultant and consultee share a common understanding of what consultation is and that the teacher assumes an active role in the problem identification process.

(2) Problem Definition Skills

There are two basic skills which are relevant to the problem definition stage in consultation. The first is that the teacher needs to understand the theoretical/conceptual framework used to diagnose the problem. By understanding the framework used the teacher is better able to understand the ideas presented by the consultant, and the teacher is in a better position to contribute ideas with a direct bearing on the diagnostic process used in problem definition. For example, there are at least three major theoretical views of behavior which are used frequently by school consultants. These are the behavioral model, the group process model and the psycho-dynamic (or mental health) model. (See Schmuck and Schmuck, 1974, for a clear, readable description of the details regarding these theories of behavior.) Not only should teachers in training understand these three models, but they should have the opportunity to apply these three theories to real classroom problems.

In addition to becoming familiar with several models or theories of behavior, it is important that the consultee (teacher) be encouraged to seek an understanding of the consultant's model(s) or theory(s). In practice, it is essential that consultant and consultee work together with mutual understanding about how each approaches the problem.

The second basic skill necessary for the teacher to contribute to adequate problem definition is the capacity to define the problem in specific terms and to communicate precisely on relevant problems. One factor which often interferes with successful consultation is the consultant's inability to elicit more than vague problem descriptions from the teacher. Vague descriptions cannot be used to develop a clear definition of the problem.

A Learning Task Regarding Problem Description

1. Have each student in the class tape a consultation session in which they receive consultation. This can be a tape of a real consultation session or a role play.
2. Have the class listen to their tapes in groups of four and give feedback to each other on the specificity of their problem descriptions.
3. Discuss with the class as a whole the types of feedback received about their problem descriptions.
4. Discuss methods of improving problem descriptions. (The modules in "Formal Observation of Students Social Behavior" (by F. Wood) and "Curriculum-Based Assessment and Evaluation Procedures" (by A. Hofmeister and C. Preston) may be found helpful regarding this topic).

(3) Skills Relevant to Intervention

Often teachers expect the consultant to provide the answer or tell them exactly how to solve the problem. However, this is not the most effective approach to consultation. Consultation has the greatest chance to be effective when the interventions are developed jointly by the consultant and consultee. In some instances, when the consultant makes a recommendation, the teacher must feel free to suggest the best way to implement the idea in the particular class or school. In other instances, the teacher should feel free to offer an alternative suggestion. Further, teachers should be aware that there is always more than one approach to a problem. Rather than accepting one recommendation from the consultant, the teacher

should feel free to seek alternative approaches to intervention. Teacher ownership of the final decision is a key ingredient to its probability of success.

(4) Evaluation Skills

Evaluation is one of the important aspects of consultation which is ignored too often. Usually, evaluation is thought of as the consultant's responsibility. However, there are two reasons why teachers need evaluation skills: (a) There are many instances when the data needed to determine the impact of interventions are most easily collected by the teachers. (b) The teacher needs a systematic way to determine the effectiveness of consultation. This would provide a vehicle through which the teacher could provide feedback to the consultant rather than passively waiting for feedback from the consultant.

There are two approaches to data gathering which would be most useful to the teacher. One involves techniques for observing pupil behavior and the second involves techniques for observing teacher pupil interaction. Some of the techniques which can be used to observe pupil behavior include permanent products like test scores, frequency counts of specific behaviors, and time sampling where the child's behavior is observed at several predetermined moments each day. Detailed information about these approaches to behavior observation can be found in Tucker and Coulter (1981). Some of the techniques which can be used to observe teacher-pupil interaction include the Flanders Interaction Analysis Categories (Flanders, 1970), the Dyadic Teacher-Pupil Interaction System (Good & Brophy, 1970), and behavioral observation systems (Tucker & Coulter, 1981). More information about these observation systems can be obtained from Meyers, Parsons and Martin (1979).

A Learning Task Regarding Evaluation Skills

1. Observation systems can be taught using a video-tape of a classroom provided by the instructor.

2. Have the class pick a specific child, then define a behavior to observe and then observe with this behavioral system for about ten minutes. Have the class calculate reliability of its observations in pairs and discuss discrepancies. This procedure can be repeated as often as needed.
3. Have the class use the Flanders Interaction Analysis Categories for 10 minutes to observe teacher-pupil interaction. Then have the class calculate reliability and discuss any discrepancies. This exercise will probably need to be repeated several times.
4. If more information is needed about observation systems review the appropriate sections from the module by F. Wood in this series or Tucker and Coulter (1981).

(5) Process Skills

There are several process skills which are particularly important for the teacher to use during consultation: (a) The teacher must maintain a clear awareness that the problem belongs to the teacher and that the consultant should not accept ownership for the problem in lieu of the teacher. (b) The teacher must feel that he or she has the freedom to accept or reject the consultant's ideas. (c) The teacher must view consultation as a collaborative process which involves an interchange between colleagues. Although the consultant is presumed to have expertise regarding the problem being referred, it is essential that the teacher maintain an awareness of his or her expertise in the classroom. (d) The teacher can help to build trust in the relationship through the core conditions for effective helping which were described initially by Rogers. Teachers can be taught to communicate empathy, genuineness, and non-possessive warmth to the consultant, and this will help to build trust in the relationship. An exercise providing training in this skill is presented in an earlier section of this module. Many of these skills are

developed through courses such as that outlined in the "Counseling Skills for Teachers" module (by N. Sprinthall) in this series.

(6) Skills to Reduce Resistance

Just as the teacher can contribute to resistance in consultation, so can the consultant. Usually this topic is dealt with by considering those techniques the consultant can use to reduce teacher resistance. However, the teacher can also take steps to reduce resistance from the consultant. First the teacher must be able to identify resistance by determining whether there is defensiveness in the consultation relationship. The teacher can often make this determination by paying careful attention to what he or she says during consultation. When the teacher finds that his or her problem descriptions repeatedly seek to externalize the source of the problem, then the relationship is probably affected by resistance. (More details about the nature of externalization and resistance in consultation are found in an earlier section.) In these instances it is possible that either the teacher or the consultant is doing something to stimulate this resistance.

Now, consider the cooperative-competitive model of the consultation process which was described above. According to this model, the teacher can reduce resistance on the part of the consultant by increased use of the cooperative behaviors which were described earlier.

Learning Task Regarding Resistance

1. Break the class up into pairs and have one teacher-trainee serve as a consultant to the other.
2. Provide instructions to the "consultants" while the "consultees" are out of the room, and ask the "consultants" to consult using a competitive frame of reference.
3. Allow consultation to occur for about five minutes and then take a break during which instructions are provided to the "consultees". Ask the "consultees" to increase their use of cooperative behaviors, including empathy.

2. Have the class pick a specific child, then define a behavior to observe and then observe with this behavioral system for about ten minutes. Have the class calculate reliability of its observations in pairs and discuss discrepancies. This procedure can be repeated as often as needed.
3. Have the class use the Flanders Interaction Analysis Categories for 10 minutes to observe teacher-pupil interaction. Then have the class calculate reliability and discuss any discrepancies. This exercise will probably need to be repeated several times.
4. If more information is needed about observation systems review the appropriate sections from the module by F. Wood in this series or Tucker and Coulter (1981).

(5) Process Skills

There are several process skills which are particularly important for the teacher to use during consultation: (a) The teacher must maintain a clear awareness that the problem belongs to the teacher and that the consultant should not accept ownership for the problem in lieu of the teacher. (b) The teacher must feel that he or she has the freedom to accept or reject the consultant's ideas. (c) The teacher must view consultation as a collaborative process which involves an interchange between colleagues. Although the consultant is presumed to have expertise regarding the problem being referred, it is essential that the teacher maintain an awareness of his or her expertise in the classroom. (d) The teacher can help to build trust in the relationship through the core conditions for effective helping which were described initially by Rogers. Teachers can be taught to communicate empathy, genuineness, and non-possessive warmth to the consultant, and this will help to build trust in the relationship. An exercise providing training in this skill is presented in an earlier section of this module. Many of these skills are

developed through courses such as that outlined in the "Counseling Skills for Teachers" module (by N. Sprinthall) in this series.

(6) Skills to Reduce Resistance

Just as the teacher can contribute to resistance in consultation, so can the consultant. Usually this topic is dealt with by considering those techniques the consultant can use to reduce teacher resistance. However, the teacher can also take steps to reduce resistance from the consultant. First the teacher must be able to identify resistance by determining whether there is defensiveness in the consultation relationship. The teacher can often make this determination by paying careful attention to what he or she says during consultation. When the teacher finds that his or her problem descriptions repeatedly seek to externalize the source of the problem, then the relationship is probably affected by resistance. (More details about the nature of externalization and resistance in consultation are found in an earlier section.) In these instances it is possible that either the teacher or the consultant is doing something to stimulate this resistance.

Now, consider the cooperative-competitive model of the consultation process which was described above. According to this model, the teacher can reduce resistance on the part of the consultant by increased use of the cooperative behaviors which were described earlier.

Learning Task Regarding Resistance

1. Break the class up into pairs and have one teacher-trainee serve as a consultant to the other.
2. Provide instructions to the "consultants" while the "consultees" are out of the room, and ask the "consultants" to consult using a competitive frame of reference.
3. Allow consultation to occur for about five minutes and then take a break during which instructions are provided to the "consultees". Ask the "consultees" to increase their use of cooperative behaviors, including empathy.

4. Then have the consultation resume for 10 minutes.
5. After consultation is concluded have the class discuss what occurred. This discussion should emphasize the potential of reducing consultant resistance when the teachers use cooperative behavior.

(7) Skills to Reduce Organizational Resistance

As noted earlier in this module many schools will not be prepared to offer the consultation services expected by teachers who receive training based on these materials. Potential consultants may be reluctant to offer these services because of their lack of relevant training and their fear that they do not have the necessary skills. Administrators and teachers may view requests for consultation as a sign of weakness, and therefore they may discourage consultation. Also, administrators may demand that potential consultants spend their time on other activities (e.g., testing a given number of cases without time for consultative follow-up).

Despite these problems, teachers (as well as consultants) can take steps to facilitate the implementation of consultation. This can be done by assessing organizational factors which might interfere with the implementation of consultation and trying to intervene where appropriate. One useful framework for assessing organizational factors is provided in an article by June Gallessich which is one of those appended to this module. A brief description of these factors with some implications for teachers is presented below.

Gallissich mentions four factors which can be considered by the teacher: (1) external forces; (2) internal forces; (3) the school's trajectory; and (4) staff perceptions of the consultant's role. External forces refer to factors such as the central school administration, the local school board, parent groups, neighborhood problem areas, state education agencies, federal laws, and teacher

unions. The teacher might wish to assess the values of central administration; the perception of the school as high status, deteriorating, rebel, and so forth; perceptions about the school principal, etc. The teacher might strengthen the possibility of successful consultation in some schools by (1) helping to strengthen the principal's leadership, status, and sense of efficacy; (2) clarifying the autonomy which is provided by central administration to decisions on the building level; or (3) helping to build school-community relations, and a commitment to improve schools. Although these factors may not appear to have a direct relation to consultation services, the impact can be powerful.

A second factor to assess is the internal forces. These include structure of the school organization, clarity of the roles, type of leadership and patterns of decision-making, the people in the organization who exert formal and informal power, and the norms regarding communication. Based on a careful assessment of these internal forces a teacher may provide input about the most appropriate objectives of consultation. For example, in a system with severe communication barriers level IV consultation may be most appropriate as the first step.

The school's trajectory is a third important factor. What is the history of the school, and in this context, how is it perceived on dimensions such as quality of education, social opportunities, faculty morale, educational orientation, and source of identity for the community? Similar to the other factors mentioned, this may lead to implications for what the focus of consultation should be, especially in relation to attempts to change or maintain the trajectory.

The last influential force relates to the staff's perceptions of the consultation services and letting others know when it is successful, expressing directly the perceived needs a school has for consultation, and using work on school committees as an opportunity to communicate this point of view.

Learning Task Regarding Assessment of Organizational Factors

1. Have the class read the article by Gallessich (1974) and Seymour Sarason's (1971) book, The Culture of the School and the Problem of Change or present the major ideas in a lecture.
2. Discuss the ideas from these materials with the class as a whole group.
3. Break up the class into small groups and have the groups develop a plan for assessing a school organization.
4. The groups would then have the assignment of implementing this assessment in a school and developing recommendations to facilitate consultation based on this assessment. (The ACLE scale developed by Maynard Reynolds and available through the National Support Systems Project at the University of Minnesota may be a useful model.)

(8) Consultation Experience

Teachers need to develop an awareness of what it is like to participate in consultation. The teacher training program should be sure to use simulation activities involving the practice of consultation such as those which have been presented in this module. It is important that each teacher in training have the opportunity to play the role of consultant as well as the role of consultee at least one time. In addition to these simulated activities it is useful to set up real consultation experience as a systematic part of the trainee's practicum and student teaching. If the school in which the student is practicing does not offer him/her the opportunity to be a consultee, student teacher supervisors should provide this experinece. This experinece should include attention to each of the 7 "Skills Necessary for the Consultee" discussed above.

Conclusions

The purpose of this module has been to provide a stimulus to encourage teacher educators to design learning experiences which will educate teachers-in-training about the consultation services which can be available in schools. It is designed to produce experiences that provide teachers with some of the concepts, motivation and techniques necessary to make optimal use of consultation. In addition to providing assessment devices which can be used to evaluate the extent to which this area is currently taught in teacher-training programs, it also presents the rationale and knowledge base necessary for a consultation model. Sample learning experiences and simulation activities which can be used by the teacher-educator are also outlined briefly.

This module is unique in that almost nothing has been written which focuses on the role of the teacher as consultee, with the exception of the paper by Jack Bardon which is appended. If this module has its intended impact, teachers will be more knowledgeable about consultation, they will be more likely to stimulate other professionals to provide consultation, they will be more actively involved in the consultation process, and they will have some of the skills needed to facilitate successful consultation. One limitation regarding these goals is that the module is designed to influence teacher training programs, rather than the schools themselves. Even when teachers-in-training are prepared adequately to assume their role in the consultation process, they will still have to enter schools that often do not expect that teachers will seek consultation or that other professionals will have the necessary time available to provide consultation. Many recently trained teachers will enter schools in which the professionals who could offer consultation (e.g., school psychologists, counselors, speech and language pathologists, resource room teachers), may resist the teacher's requests for such services. Others will encounter resistance from administrators who will not allow school professionals

the opportunity to provide consultation, or from a variety of educators who believe it is a sign of weakness to seek professional help.

It is important that teachers-in-training are made aware of these realities. Yet, there is reason to be optimistic. Consultation has grown dramatically as an accepted professional role for several groups of school professionals and there is strong support within these groups. This has resulted in training programs which emphasize consultation skills for professionals such as counselors and school psychologists. Redesigned teacher education programs that stress the teacher as a consumer of consultation may facilitate additional requests for these kirds of services from teachers. With an increasing number of teachers and other school professionals pointing out the need for consultative relationships in schools, there may be a faster movement toward these services. In fact, already there are many schools where these services are seen as the main responsibility of school specialists. Those involved in teacher training have the opportunity to facilitate the continued development of consultative models of service delivery in schools.

The teacher educator should be aware that skills training such as that outlined in this module overlaps with a variety of other school-related activities and, therefore, such programs may have positive side effects. For example, the skills relevant to the process of consultation can have meaningful impact on the teacher's work in conferences with parents. Not only will teachers have a better understanding of the resistance they sometimes encounter with parents, but they will learn a variety of skills which can facilitate relationships with some parents. Similarly, the content of this module suggests implications for the relationship between supervisor (or cooperating teacher) and the student-teacher, since many of the relationship-oriented, data gathering and intervention techniques discussed could be used by the supervisor. Nevertheless, this module is not intended as a stimulus for coursework in parent interviewing or teacher supervision. Much

additional training is needed for competent work in these areas. There are many professionals in schools who at one time or another should seek consultative help. In addition to regular classroom teachers, this includes special education teachers, administrators, and pupil personnel workers. When training is provided regarding consultation and the skills of the consultee, efforts could be made to establish this training in a multi-disciplinary fashion. Not only would this provide a rich learning environment due to the diversity of backgrounds of those being trained, but it would also begin to model the kinds of inter-disciplinary functioning which is so necessary for effective schools.

REFERENCES AND OTHER TRAINING MATERIALS

Alpert, J.L. Some guidelines for school consultation. Journal of School Psychology, 1977, 15, 308-319.

Axelrod, S. Behavior modification for the classroom teacher. New York: McGraw Hill, 1977.

Bardon, J.I. The consultee in consultation: Preparation and training. Paper presented at the Annual Meetings of the American Psychological Association, San Francisco, August, 1977.

Bergan, J.R. Behavioral consultation. Columbus, Ohio: Charles E. Merrill, 1977.

Bergan, J.R. & Schnaps, A. A model for instructional consultation. In J. Alpert & J. Meyers (Eds.), Training in consultation. Springfield, Ill.: Charles C Thomas, in press.

Blanco, R. Prescriptions for children with learning adjustment problems. Springfield, Ill.: Charles C Thomas, 1972.

Blanco, R. & Rosenfeld, J. Case studies in clinical and school psychology. Springfield, Ill.: Charles C Thomas, 1978.

Caplan, G. The theory and practice of mental health consultation. New York: Basic Books, 1970.

Carkhuff, R.R. Helping and human relations: A primer for lay and professional helpers. Vol. 1: Selection and training. New York: Holt, Rinehart & Winston, 1969a.

Carkhuff, R.R. Helping and human relations. Vol. 2: Practice and research. New York: Holt, Rinehart & Winston, 1969b.

Conoley, J. (Ed.) Consultation in schools: Theory, research, procedures. New York: Academic Press, 1981.

Curtis, M.J. & Anderson, T. Consulting in educational settings: A collaborative approach. Cincinnati: Faculty Research Center, University of Cincinnati, 1976. (For these materials write to Mike Curtis, University of Cincinnati).

Curtis, M.J. & Zinns, J.E. Consultative effectiveness as perceived by experts in consultation and classroom teachers. Paper presented at the Annual Meetings of the National Association of School Psychologists, New York, 1978. (For this paper write to Mike Curtis, University of Cincinnati).

Curtis, M.J. & Zinns, J.E. The theory and practice of school consultation. Springfield, Ill.: Charles C Thomas, 1981.

Deutsch, M. A theory of cooperation and competition. Human Relations, 1949, 2, 129-152.

Deutsch, M. The effect of motivational orientation upon trust and suspicion. Human Relations, 1960, 13, 123-139.

Egan, G. The skilled helper. Monterey, Calif.: Brooks/Cole, 1975.

Freidman, M.P. Mental health consultation with teachers: An analysis of process variables. Paper presented at the Annual Meetings of the National Association of School Psychologists, New York, 1978. (For this paper write to J. Meyers, Department of School Psychology, Temple University).

Gallessich, J. Organizational factors influencing consultation in schools. Journal of School Psychology, 1973, 11, 57-65.

Gazda, G.M. et al. Human relations development: A manual for educators. Boston: Allyn & Bacon, 1973.

Goldberg, E.K. Effects of models and instructions on a verbal interviewing behavior: An analysis of two factors of the microcounseling paradigm. Unpublished doctoral dissertation, Temple University, 1970.

Good, T.L. & Brophy, J.E. Teacher-child dyadic interactions: A new method for classroom observation. Journal of School Psychology, 1970, 8, 131-138.

Goodwin, D.L., Garvey, W.P. & Barclay, J.R. Microconsultation and behavior analysis: A method of training psychologists as behavioral consultants. Journal of Consulting Psychology, 1971, 37, 355-363.

*Hyman, I.A., Lally, D.M., Lennox, N. & McWhorter, S. Six approaches to understanding discipline. Philadelphia: National Center for the Study of Corporal Punishment and Alternatives in the Schools. (For these materials write to Irwin Hyman, Department of School Psychology, Temple University).

Ivey, A.E. Microcounseling: Innovations in interviewing training. Springfield, Ill.: Charles C Thomas, 1971.

Ivey, A.E. & Gluckstern, N.B. Basic attending skills (Leader & Participant Manuals). Amherst, Mass.: Microtraining Assoc., 1974.

Katz, L.G. Talks with teachers, reflections on early childhood education. Washington D.C.: National Association for the Education of Young Children, 1977.

Kuehnel, T.G. & Kuehnel, J.M. Consultation training from a behavioral perspective. In J. Alpert & J. Meyers (Eds.), Training in consultation. Springfield, Ill.: Charles C Thomas, in press.

Martin, R. & Meyers, J. School psychologists and the practice of consultation. Psychology in the Schools, 1980, 17, 478-484.

Meyers, J. Resistance in teacher consultation: A relationship model. Paper presented at the Annual Meetings of the American Psychological Association, Tornonto, 1978.

*Meyers, J. Mental health consultation. A video-tape of a consultation workshop produced for the Nebraska School Psychologists" Association and the Montgomery

County Intermediate Unit, Montgomery County, Pennsylvania, 1981. (For these tapes write to Joel Meyers, Department of School Psychology, Temple University).

Meyers, J., Martin, R. & Hyman, I. (Eds.) School consultation: Readings about preventive techniques for pupil personnel workers. Springfield, Ill.: C.C. Thomas, 1977.

Meyers, J., Parsons, R.D. & Martin, R. Mental health consultation in the schools. San Francisco: Jossey-Bass, 1979.

Meyers, J. & Pitt. N. A consultation approach to help a school cope with the bereavement process. Professional Psychology, 1976, 7, 554-564.

O'Leary, K.D. & O'Leary, S.G. (Eds.) Classroom management: The successful use of behavior modification (2nd Ed.). New York: Pergamon Press, 1977.

Ritter, D.R. Effects of a school consultation program upon referral patterns of teachers. Psychology in the Schools, 1978, 15, 239-243.

Rogers, C.R. The necessary and sufficient conditions of therapeutic change. Journal of Consulting Psychology, 1957, 21, 95-103.

Sarason, S.B. The culture of the school and the problem of change. Boston, Mass.: Allyn & Bacon, 1971.

Schein, E.H. Process consultation. Reading, Mass.: Addison-Wesley, 1969.

Schmuck, R.A. & Miles, M.B. (Eds.) Organization development in the schools. Palo Alto, Calif.: National Press Books, 1971.

Schmuck, R.A., Runkel, P.J., Arends, J.H. & Arends, R.I. The second handbook of organization development in schools. Palo Alto, Calif.: Mayfield, 1977.

Schmuck, R.A. & Schmuck, P.A. A humanistic psychology of education: Making the school everybody's house. Palo Alto, Calif.: National Press Books, 1974.

Schowengerdt, R.V., Fine, M.J. & Poggio, J.P. An examination of some bases of teacher satisfaction with school psychological services. Psychology in the Schools, 1976, 13, 269-275.

Sulzer-Azaroff, B., McKinley, J. & Ford, L. Field activities for educational psychology: Carrying concepts into action. Santa Monica, Calif.: Goodyear, 1977.

*Tucker, J. & Coulter, A. Non-test based assessment. An in-service training module developed for the National School Psychology In-Service Training Network, University of Minnesota, 1981. (For these materials write to Jim Ysseldyke, Department of Psycho-Educational Studies, University of Minnesota, Minneapolis, Minnesota).

Wenger, R.D. Teacher response to collaborative consultation. Psychology in the Schools, 1979, 16, 127-131.

Wilcox, M.R. Variables affecting group mental health consultation for teachers. Paper presented at the 85th Annual Meeting of the American Psychological Association, San Francisco, 1977. (For this paper write to Margaret Wilcox, School Psychology Training Program, University of California - Berkeley).

*Wilson, J., Hunt, P., Meyers, J., Silberman, M. & Martin, R. Three views of consultation. Video-tape produced at Temple University. (For these tapes write to Joel Meyers, Department of School Psychology, Temple University).

*Indicates In-service Training Materials or Video-Tape.

RELEVANT ARTICLES

There is little currently available in the literature which describes consultation from the perspective of the teacher as consultee. However, there has been a great deal of recent work in the general area of school consultation. Three recent books are referenced which provide a thorough view of the current work in this field (Conoley, 1981; Curtis & Zinns, 1981; Meyers, Parsons & Martin, 1981). Six articles are reproduced here which help to supplement this module and the three books noted above.

The first (Meyers, 1973) presents an overview of the consultation model presented here. The second (Meyers, 1975) presents a detailed example of level III consultation with supporting data. The third (Lennox, Flanagan and Meyers, 1979) presents a detailed example of level IV consultation with supporting data. The fourth article (Alpert, 1977) presents guidelines for consultants. The fifth paper (Gallessich, 1973) outlines the importance of organizational factors to the consultation process. The last paper (Bardon, 1977) presents additional rationale for training consultees in the skills necessary for successful consultation.

Journal of School Psychology
Volume 11, No. 1, 1973

A CONSULTATION MODEL FOR SCHOOL PSYCHOLOGICAL SERVICES

JOEL MEYERS

Temple University

Summary: This paper proposes a consultative model for school psychology which includes several techniques that have been independently presented in the past. The primary contribution is the integration of these different methods into a model which is specifically designed for school psychologists. The proposed model is adapted from Caplan (1970), and it includes four levels of functioning: I) Direct Service to the Child; II) Indirect Service to the Child; III) Direct Service to the Teacher; and IV) Service to the School System; a distinction is made between the content and process of consultation, and a shift in emphasis from level I to the remaining levels is suggested.

During the past decade there has been an influx of literature regarding the role of psychologists in the schools, and it has become commonplace to condemn both psychodiagnostic and clinical approaches to school psychology (e.g., Engelmann, 1967; Lighthall, 1969; Kennedy, 1971; Reger, 1967; Tindall, 1964; and Valett, 1968). Several consultation techniques have been suggested as alternatives to clinical methods (e.g., Bergan & Caldwell, 1967; Fine & Tyler, 1971; McDaniel & Ahr, 1965; Newman, 1967; and Valett, 1968); however, a comprehensive and well-developed model for consulation in the schools has not yet appeared. Although Caplan (1970) presents a system for consultation which is well articulated, it was not designed specifically for the schools, and he ignores some important ways in which a consultant should function in the schools (e.g. interaction analysis, task analysis, or behavior modification techniques).

The purpose of this paper is to propose a consultative model for school psychologists. Since the different consultation techniques discussed in the literature have not yet been integrated, the proposed model attempts to incorporate these techniques in order to promote a more viable framework for consultation in the schools. In attempting to develop this framework, this paper describes samples of these apparently diverse consultation techniques; it illustrates four important assumptions which are common to these different techniques; and it uses the same four assumptions as a basis for the consultative model which is presented.

A review of the literature reveals that a variety of independent methods has been proposed as appropriate for consultation in the schools. In order to demonstrate the broad range of these activities, a brief description of four such approaches follows.

Task Analysis (Engelmann, 1967; Forness, 1970; and Valett, 1968) It has been argued that the evaluation of learning disorders should not be based

primarily on norm referenced tests associated with traditional psychodiagnostic test batteries. On the contrary, such evaluations should focus on techniques which lead to specific academic programs regardless of chronological age or grade level. In other words, it would be most appropriate to assess skills directly related to the classroom tasks (task analysis), since the focus should be on specific academic recommendations for the teacher.

Behavior Modification (Bergan & Caldwell, 1967; Hall, Cristler, Cranston, & Tucker, 1970; Hall, Lund, & Jackson, 1968; Kennedy, 1971; Morice, 1968; Stephens, 1970; Thomas, Becker, & Armstrong, 1968). There is an extensive body of research suggesting that behavior problems presented in school can be changed efficiently through systematic observation and subsequent modification of the reinforcement contingencies controlling children's behaviors. Moreover, it has been demonstrated that a consultant can help teachers to develop effective techniques for changing such contingencies in the classroom, and it has been indicated that reinforcement theory should form the basis for consultation in the schools.

Consultee-Centered Case Consultation (Caplan, 1970; and Fine & Tyler, 1971). One of the four modes of consultation described by Caplan is consultee-centered case consultation, and the major focus is to improve the professional functioning of the teacher. Changes in particular children are of secondary concern, however, it is assumed that alleviating teacher difficulties (i.e., lack of understanding, lack of skill, lack of self-confidence, or lack of objectivity) will result in improved behavior of the referred child. In addition, it is predicted that the same problem would be less likely to occur with similar children which the teacher may face in the future, and Fine & Tyler (1971) have implied that, rather than behavior modification, consultee-centered case consultation could serve as a basis for teacher consultation.

In-Service Teacher Education (McDaniel & Ahr, 1965). In-service training for teachers has been described as an appropriate consultation technique. This approach would allow the psychologist to multiply his effects by working with groups of teachers in attempting to upgrade a variety of areas of teacher functioning.

The four examples presented above help to underscore the diversity of approaches which have been considered as consultation techniques, and in this connection, sometimes it has been implied that one approach should be conceptualized as the singular basis for consultation in the schools. It is the position of this paper that any one of these orientations would be too limited to serve as a practical basis for consultation by school psychologists, and therefore, the present model attempts to integrate these different orientations.

In this regard, one reason why consultation techniques have been discussed in the literature has been to respond to past criticisms of school psychology, and several postulates about psychological services have been presented in conjunction with these past criticisms. A careful examination reveals that some of these postulates are common to the different consultation techniques which have been proposed. These common factors are key assumptions providing a framework for the consultation model presented in this paper, and these assumptions are described below.

1) *Emphasis on Observable Behavior and Extrapersonal Causes.* Historically the practice of school psychology was dominated by attempts to understand behavior primarily as a function of underlying, intrapersonal factors (Goodwin, 1970; Lighthall, 1969; Oakland, 1969; Singer, Whiton, & Fried, 1970; and Stephens, 1970). However, this bias may cause psychologists to de-emphasize other important variables, and it has been argued that increased focus on observable behavior and extrapersonal (i.e., environmental) causes will often produce more effective changes in classroom behavior (Engelmann, 1967; Stephens, 1970; and Oakland, 1969).

2) *Reduced Time Testing.* Complex diagnostic techniques are not always necessary to the development of relatively uncomplicated remedial techniques (Wolfensberger, 1965). In addition, the information derived from traditional psychodiagnosis is often irrelevant to the teacher and does not lead to behavior change as the focus is on variables (e.g., labels such as brain injury and mental retardation) which the teacher cannot control (Bennett, 1970; Bersoff, 1971; Engelmann, 1967; and Singer, Whiton, & Fried, 1970). Consequently, it is the position of this paper that the school psychologist could work most efficiently by reducing the amount of time devoted to individual testing.

3) *Indirect Service to Children.* Individual clinical work reaches only a small proportion of the children presenting school problems (Albee, 1959; Kennedy, 1971; and Tindall, 1964), and this approach to school psychological services is inappropriate in light of the recent emphases on the disadvantaged child (Reiff, 1967; and Zach, 1970) and on the total school population (Cowen, 1967). In this regard, it has been indicated that curative approaches to psychological services in the schools will make less efficient use of limited manpower than preventative approaches oriented toward reducing the potential number of future problems (Brayfield, 1965; Bardon & Bennett, 1967; and Cowen, 1967). One way to maintain consistency with the above principles and to multiply the school psychologist's effects would be to provide indirect services to children through other agents such as teachers or parents.

4) *Personal Contact with School Personnel.* In the past, school psychologists have been criticized for their failure to develop effective communication with the schools. In order to minimize this problem, formal reports must be supplemented by face-to-face contacts between the psychologist and relevant school personnel (Chovan, 1968; and Singer, Whiton, & Fried, 1970). Consultation techniques are one way to accomplish this goal.

These four assumptions, in conjunction with the specific approaches to consultation presented above, indicate that school psychologists have been writing about broadened role conceptions for several years. However, some consultation practices have been implemented infrequently (Bardon, 1964; Kennedy, 1971; Lighthall, 1969; and Starkman, 1967), and this may indicate resistance to change. For example, many psychologists working in schools may participate in maintaining a system with too much emphasis on psychodiagnosis and insufficient attention to change of behavior in the classroom. This may occur because some psychologists feel a lack of expertise regarding practical classroom problems (Rudnick & Berkowitz, 1968), and thus, they

may be inclined toward the more comfortable roles of testing and diagnosis of the child's intrapersonal problems. In this connection, it has been argued that confusion about the psychologist's role has led some psychologists to a "test-report" syndrome (Schmidt & Pena, 1964).

There may also be secondary gains for the teacher in clinically oriented systems. Referring the problem to the psychologist is a concrete action which may alleviate the teacher's guilt feelings, while allowing him to ignore his responsibility for making the effort of focusing on remedial approaches in the classroom (Kennedy, 1971).

Consequently, both psychologists and teachers might be unlikely to consider alternative approaches to psychological services, and this may be one reason why some consultation techniques have not been implemented on a broad basis in the schools. Although one goal of the model described in this paper is to broaden the basis for understanding school consultation, it could also contribute to greater implementation of, and decreased resistance to, some of the potentially important consultation techniques. The model might help to accomplish this latter goal if it were used to help structure the school psychologist's time allocations and if it were used as a basis for communicating the role of the school psychologist to teachers and other school personnel. The result could be reduced time spent on testing and increased time devoted to consultation activities.

A CONSULTATIVE MODEL

This paper presents four levels of consultation in an order of service, from consultant to child, which becomes increasingly indirect. Although there may be some cases where the consultant has direct contact with the child, the specific treatments to the child are always provided indirectly from the consultant through another agent. In addition to indirect service, the consultation model emphasizes personal communication with school personnel, as this is an integral feature of any level of functioning. Moreover, the role of reduced time testing, observable behavior, and extrapersonal causes are stressed at all levels of this model. Finally, the description of each level differentiates between diagnostic techniques and intervention methods.

Level I: Direct Service to the Child

The consultant's primary focus at Level I would be the child, and in addition, direct services to the child would include any functions necessitating direct contacts with referred children. Although these direct contacts would typically include traditional individual diagnostic techniques (i.e., individual intelligence tests, projective tests, perceptual-motor tests, and interview techniques), the time spent testing would be reduced, and the focus on extrapersonal factors would be increased, since the model de-emphasizes this level of functioning.

Although diagnostic techniques used at this level involve direct rather than indirect service from consultant to child, it is important that this mode of functioning be considered within a consultation framework. To begin with,

these techniques are clearly used as a consultation tool in that the resultant diagnoses should lead to treatment plans which are implemented indirectly by the consultant through other agents outside the classroom (e.g., parents). In addition, even though it has been attempted (Cardon & Effraemson, 1970), there are two reasons why it would be impractical to offer psychological services while excluding traditional diagnostic work. First, there are some children for whom outside intervention agents will be more effective than the consultant and the classroom teacher. Second, providing these traditional services is a way in which to ease resistance to less familiar approaches. In this regard, individual diagnosis may aid the consultant's acceptance into a school system, as this can be one way to perform concrete actions which help to create the perception that the consultant is concerned and effective (Sarason, Levine, Goldenberg, Cherlin, & Bennett, 1966).

Level II: Indirect Service to the Child

The primary goal of indirect service to the child would be to change the child's observable behavior in the classroom, and consequently, diagnostic techniques would be directly related to remedial programming. One important diagnostic principle emphasized at this level would be to focus on extrapersonal factors in school; this would lead to legitimate questions about the curricula, teaching techniques, and teacher behavior (Oakland, 1969).

A variety of diagnostic techniques would be used to focus on observable behavior and to assess the effects of school related, extrapersonal factors. For example, task analysis techniques (Englemann, 1967; Forness, 1970; and Valett, 1968), in which diagnostic tests are directly related to the school curriculum, have a high consistency between the problem behavior and the tasks used for diagnosis. In addition, classroom observation techniques used in behavior modification programs are consistent with an orientation toward extrapersonal causes of behavior, as these techniques consider the effects of the classroom situation. Particularly relevant to the school psychologist is Good and Brophy's (1970) observation system which provides for systematic observation of the child's behavior in relation to the teacher's behavior. While there would be several appropriate diagnostic techniques, there would be no traditional psychodiagnostic testing at this level, and the emphasis on intervention techniques would result in reduced time testing.

Similar to Level I, the primary focus of the consultant's intervention at Level II would be the child; however, in this case the agent who later treats the child would be the classroom teacher. The orientation would be to use the classroom situation to help change the child's behavior in school, and specifically, the focus would be to help the teacher develop programs which he can implement (e.g. remedial academic or behavior modification programs). It should be noted that by focusing on observable school behavior, the psychologist may be more likely to inquire directly about methods for changing behavior rather than probing for the presumed causes of this behavior; this would be consistent with the notion that complex diagnostic testing is not always necessary for the development of relatively uncomplicated remedial techniques (Wolfensberger, 1965).

Level III: Direct Service to the Teacher

In view of the importance attributed to extrapersonal classroom factors in the development of classroom problems, the teacher is seen as a key person. In this connection, psychological services should be available to the teacher in order to improve his ability to function effectively with all children in the classroom rather than to restrict services to individual cases. Therefore, rather than the child, the teacher is the consultant's primary focus when providing service at Level III, and in this regard there is a reduction in time spent testing. Although the methods of consulting described above may also serve to improve a teacher's general functioning, Level III can be distinguished from Levels I and II in that the consultant's primary goal is to change the teacher's behavior rather than the child's behavior.

Changing the child is a secondary rather than a primary goal. However, similar to Level II, indirect service is provided to the child since it is still assumed that the teacher will act as the agent of change for the child at Level III. Rather than implement specific programming recommendations, the teacher might respond differently to the child subsequent to the consultant's interventions. These responses could involve less affective involvement or reduced teacher anxiety.

The primary methods employed at Level III are derived from Caplan's consultee-centered case consultation techniques, which are described in greater depth elsewhere (Caplan, 1970; and Fine & Tyler, 1971). Briefly, sophisticated diagnostic interviewing techniques would be used by the consultant to determine whether the problem was relevant to any of four major categories: lack of understanding, lack of skill, lack of self-confidence, or lack of objectivity. The consultant would then use appropriate intervention techniques directly with the teacher.

For example, a consultant might determine that a teacher lacked understanding with regard to a particular facet of mental health (e.g., a psychodynamic explanation of behavior patterns). In this case, one approach would be to educate the teacher about these ideas. On the other hand, it might be determined that a teacher's personal problems external to the school were interfering with his teaching by causing him to become overly involved in specific cases. In this instance, the consultant would be available to help reduce the teacher's affective involvement with such cases.

Caplan (1970) has discussed specific techniques for reducing the teacher's affective involvement (e.g., theme interference reduction). Although a detailed description of these intervention techniques is beyond the scope of this paper, they can be summarized by the following two approaches. First, the reduction of a teacher's affective involvement in a case can be attempted if a consultant acts as a role model for the teacher by describing positive in addition to negative aspects of the case in an objective manner. The second type of intervention technique would consist of the consultant's discussing the teacher's affective involvement with the case in an indirect manner. For example, the consultant could discuss the teacher's over-involvement indirectly, by describing or explaining a similar interpersonal problem existing in a child rather than by discussing the teacher's problem.

Level IV: Service to the School System

Service to the school system, the fourth level of consultation in this model, can be differentiated from the three preceding levels since change in children or individual teachers is not the consultant's primary goal. On the contrary, the primary focus would be to change the behavior of various subgroups within the school, such as administrators, groups of teachers, or both. These groups are extrapersonal factors in children's behaviors, and thus the secondary goal would still be the indirect change of children's behavior through these agents.

A wide variety of diagnostic skills would facilitate functioning at this level; however, traditional individual testing techniques would not be used. On the contrary, interview skills and expertise with surveys and questionnaires used in evaluating school organization (Miles, Hornstein, Callahan, Calder, & Schiavo, 1969; Lorsh & Lawrence, 1969) would be necessary to provide data as a basis for change. In addition, research skills could help to determine the effectiveness of both old and new programs.

Two approaches to intervention can be conceptualized within this level of consultation. First, the consultant might take an active role in developing innovations, and this could be accomplished at an administrative level or through in-service training. Some current examples might be the implementation of open classrooms, the implementation of modified grading procedures, or the restructuring of special education. A second approach to intervention would be to improve the general functioning of the school, as the consultant might help to facilitate communication between subgroups of administrators, teachers, or both, and the goal would be improved problem solving (Bennis, Benne, & Chin, 1969).

DISCUSSION

Perhaps the most important characteristics of the model proposed in this paper are that it provides an integrated framework for consultation techniques and that it was designed specifically for school psychologists. Although the particular techniques are not new, the contribution of this model lies in its attempt to incorporate several approaches to consultation which were previously conceptualized independently. In addition, the incorporation of these different approaches has categorized consultation techniques. However, it should be noted that these categories are most important for didactic and conceptual purposes, and the techniques used in a given case will occasionally overlap some of the categories.

The descriptions of each level included a discussion of the relevant diagnostic and intervention techniques which might be used by a consultant, and these overt techniques constitute the content of consultation. For example, one content variable would be a behavior modification program which has been recommended in a given case.

In addition to the content, there are specific processes in consultation which the consultant can use to increase the probability that the consultee (e.g., caregiver such as teacher or parent) will accept the recommendations.

These processes are important because the general role of the consultant is to help the consultee change significant methods of dealing with the child and because the suggestion of such a change is likely to stimulate resistance on the part of the consultee. In this regard, process strategies can be used to alleviate or to reduce the likelihood of resistant behavior, and these processes might be involved at any of the four levels of consultation described in this paper. Even though there is some overlap, distinguishing the process from the content of consultation may help to promote a clearer understanding of the model which has been presented, and eventually this differentiation could also help to increase the effectiveness of consultation in the schools.

Therefore, four such strategies are discussed below. Some similar strategies have been mentioned previously in the consultation literature; however, there is no empirical evidence regarding the most effective process strategies. Consequently, the four strategies are presented tentatively with the goal that those involved with school consultation will use them as a basis for developing research hypotheses.

1) *Freedom to Accept or Reject.* The consultant should communicate that the consultee is free to accept or reject any conclusions and recommendations made by the consultant. This strategy might increase the probability of conclusions which would be acceptable to the consultee and in turn, this could reduce the likelihood of future resistance to implementing suggestions.

2) *De-emphasis of the Consultant's Contribution.* It may also be important that the consultant de-emphasize his contribution to the recommendations which are accepted. An important aspect of this process would be that rather than specific recommendations, the consultant would often present the data gathered and would try to help the school staff to develop their own approaches for responding to their problems. The goal would be to have the consultee feel actively involved during consultation. If this goal were achieved, and if the consultee felt at least partly responsible for the recommendations, there might be less probability of resistant behavior.

3) *Interchange between Colleagues.* The consideration of process variables helps to underscore the importance of personal communication and rapport between consultant and consultee. One important aspect of this assumption is that the relationship between the consultant and consultee should be approached as an interchange between professional colleages. For example, the teacher should often be viewed by the consultant as the expert in dealing directly with the behavior of the children in the classroom, and this positive attitude toward the teacher might help psychologists to overcome teacher resistances to consultation.

4) *Joint Responsibility: Consultant and Consultee.* In conjunction with the attitude that the teacher is the expert in dealing with children in the classroom, it would be important that the teacher maintain responsibility for the behavior of the child, and he would often be a key person in remediation. On the other hand, it is also important that the consultant have some responsibility in the case. Since extremely difficult and complex cases are often involved, the knowledge that the consultant shares the burden of the case may help to reduce teacher anxiety, and it may help him function more

objectively. Therefore, one of the most important process variables described in this paper would be that both the teacher and the consultant would be held responsible for the behavioral outcomes of their approaches.

There are other variables which are potentially significant to the consultation process (e.g., port of entry problem, Sarason, Levine, Goldenberg, Cherlin, & Bennett, 1966), and these also need further investigation. However, a complete and exhaustive analysis of all these variables is beyond the scope of this paper, and it is hoped that the attempt which has been made to begin to delineate such variables will stimulate school psychologists to do more research about the process of consultation.

The model presented in this paper described traditional psychodiagnostic service as only one aspect of the consultant's role, while it emphasized other important consultation functions. Moreover, it was noted that this model might serve as a vehicle to help increase the time devoted to some of these latter consultation activities by school psychologists. In this connection, the recent trends toward noncategorical and more flexible approaches to special education (Ebert, Phillips, & Dain, 1970; Catterall, in press; and Phillips, 1968) may provide one opportunity where school psychologists could use some of the principles presented in the above model as guidelines to help define their role in the new programs which develop.

In conclusion, perhaps both psychologists and teachers will finally realize that children can often be helped in the classroom without administering tests of any kind. This approach would reduce the case load for individual testing and permit more satisfactory and comprehensive work when contact with the individual child is necessary. In effect, there should be a shift in emphasis from the individual diagnosis at Level I to the approaches at Levels II, III, and IV, which focus directly on practical school problems.

REFERENCES

Albee, G. W. *Mental health manpower trends.* New York: Basic Books, 1959.

Bardon, J. I. Summary of views presented prior to the conference. *Journal of School Psychology*, 1964, *3* (2), 6-13.

Bardon, J. I., & Bennett, V. B. Preparation for professional psychology: An example from a school psychology training program. *American Psychologist*, 1967, *22*, 652-655.

Bennett, V. B. Who is a school psychologist (and what does he do?). *Journal of School Psychology*, 1970, *8*, 166-171.

Bennis, W. G., Benne, K. D., & Chin, R. (Eds.) *The planning of change.* New York: Holt, Rinehart & Winston, 1969.

Bergan, J., & Caldwell, T. Operant techniques in school psychology. *Psychology in the Schools*, 1967, *4*, 136-141.

Bersoff, D. School psychology and state divisions of special education: A suggestion for change. *Journal of School Psychology*, 1971, *9*, 58-60.

Brayfield, A. H. Human effectiveness. *American Psychologist*, 1965, *20*, 645-651.

Caplan, G. *The theory and practice of mental health consultation.* New York: Basic Books, 1970.

Cardon, B. W., & Effraemson, M. W. Consulting school psychology in the urban setting: Philadelphia process follow-through. *Journal of School Psychology*, 1970, *8*, 231-236.

Catterall, C. D. (Ed.) Special education in transition. *Journal of School Psychology*, in press.

Chovan, W. L. Some questions and imperatives concerning the territories of the school psychologist. *Journal of School Psychology*, 1968, *6*, 267-270.

Cowen, E. L. Emergent approaches to mental health problems: An overview and directions for future work. In E. L. Cowen, E. A. Gardner, & M. Zax (Eds.), *Emergent approaches to mental health problems*. New York: Appleton-Century Crofts, 1967.

Ebert, D. W., Phillips, B. N., & Dain, R. N. An attempt at implementing the diagnostic-intervention class model. *Journal of School Psychology*, 1970, *8*, 191-196.

Engelmann, S. Relationship between psychological theories and the act of teaching. *Journal of School Psychology*, 1967, *5*, 93-100.

Fine, M. J., & Tyler, M. M. Concerns and directions in teacher consultation. *Journal of School Psychology*, 1971, *9*, 436-444.

Forness, S. R. Educational prescription for the school psychologist. *Journal of School Psychology*, 1970, *8*, 96-98.

Good, T. L., & Brophy, J. E. Teacher-child interactions: A new method of classroom observation. *Journal of School Psychology*, 1970, *8*, 131-138.

Goodwin, D. L. A joint venture: One view . . . innovation and behavior change through . . . collaboration with a school staff. *Journal of School Psychology*, 1970, *8*, 209-214.

Hall, R. V., Cristler, C., Cranston, S., & Tucker, B. Teachers and parents as researchers using multiple-baseline designs. *Journal of Applied Behavior Analysis*, 1970, *3*, 247-255.

Hall, R. V., Lund, D., & Jackson, D. Effects of teacher attention on study behavior. *Journal of Applied Behavior Analysis*, 1968, *1*, 1-12.

Kennedy, D. A. A practical approach to school psychology. *Journal of School Psychology*, 1971, *9*, 484-489.

Lighthall, F. F. A social psychologist for school systems. *Psychology in the Schools*, 1969, *6*, 3-12.

Lorsh, J. W., & Lawrence, P. The diagnosis of organizational problems. In W. G. Bennis, K. D. Benne, & R. Chin (Eds.), *The planning of change*. New York: Holt, Rinehart & Winston, 1969.

McDaniel, L. J., & Ahr, E. The psychologist as a resource person initiating and conducting in-service teacher education. *Psychology in the Schools*, 1965, *2*, 220-224.

Miles, M. B., Hornstein, H. A., Callahan, D. M., Calder, P. H., & Schiavo, R. S. The consequence of survey feedback: Theory and evaluation. In W. G. Bennis, K. D. Benne, & R. Chin (Eds.), *The planning of change*. New York: Holt, Rinehart & Winston, 1969.

Morice, H. O. The school psychologist as a behavioral consultant: A project in behavior modification in a public school setting. *Psychology in the Schools*, 1968, *5*, 253-261.

Newman, R. *Psychological consultation in the schools*. New York: Basic Books, 1967.

Oakland, T. D. Diagnostic help 5¢: Examiner is in. *Psychology in the Schools*, 1969, *6*, 359-367.

Phillips, B. N. The diagnostic-intervention class and the teacher-psychological specialist: Models for the school psychological services network? *Psychology in the Schools*, 1968, *5*, 135-139.

Reger, R. The technology of school psychology. *Journal of School Psychology*, 1967, *5*, 148-155.

Reiff, R. Mental health manpower and institutional change. In E. L. Cowen, E. A. Gardner, & M. Zax (Eds.), *Emergent approaches to mental health problems*. New York: Appleton-Century Crofts, 1967.

Rudnick, M. & Berkowitz, H. Preparation of school psychologists: For what? *Psychology in the Schools*, 1968, *5*, 53-59.

Sarason, S., Levine, M., Goldenberg, I., Cherlin, D., & Bennett, E. *Psychology in community settings*. New York: John Wiley, 1966

Schmidt, K. M., & Pena, F. The psychologist as a consultant in the school. *Psychology in the Schools*, 1964, *1*, 419-425.

Singer, D. L., Whiton, M. B., & Fried, M. L. An alternative to traditional mental health services and consultation in schools: A social systems and group process approach. *Journal of School Psychology*, 1970, *8*, 172-179.

Starkman, S. The professional model: Paradox in school psychology. *American Psychologist*, 1967, *22*, 807-808.

Stephens, T. M. Psychological consultation to teachers of learning and behaviorally handicapped children using a behavioral model. *Journal of School Psychology*, 1970, *8*, 13-18.

Thomas, D. R., Becker, W. C., & Armstrong, M. Production and elimination of disruptive classroom behavior by systematically varying teacher's behavior. *Journal of Applied Behavior Analysis*, 1968, *1*, 35-45.

Tindall, R. H. Trends in development of psychological services in the school. *Journal of School Psychology*, 1964, *3*, 1-12.

Valett, R. E. The evaluation of basic learning abilities. *Journal of School Psychology*, 1968, *6*, 227-236.

Wolfensberger, W. Diagnosis diagnosed. *The Journal of Mental Subnormality*, 1965, *11*, 62-70.

Zach, L. Training psychologists for the urban slum school. *Psychology in the Schools*, 1970, *7*, 345-350.

Joel Meyers
Assistant Professor
Department of School Psychology
College of Education
Temple University
Philadelphia, Pennsylvania 19122

Received: December 8, 1971
Revision Received: April 3, 1972

American Journal of Community Psychology, Vol. 3, No. 2, June, 1975

Consultee-Centered Consultation with a Teacher as a Technique in Behavior Management[1]

Joel Meyers[2]
Temple University

Client-centered consultation was effective in helping a teacher to decrease one child's disruptive classroom behavior, and consultee-centered consultation helped the teacher improve her control of the class as a whole. Initially, a client-centered reinforcement program effectively decreased the disruptive behavior of one target child. Later, attention to the teacher's feelings about being the authority figure in the classroom was used in an attempt to modify the behavior of the entire class. The data describing the behavior of a second child in the classroom suggested that this consultee-centered consultation was followed by less classroom disruption. In addition, anecdotal observations indicated that consultee-centered consultation was effective in modifying the behavior of both the teacher and the rest of the class.

The increased focus on a preventive approach to mental health and the related emphasis on indirect rather than direct mental health service to clients have contributed to the extensive attention given to mental health consultation in a variety of community settings (Caplan, 1970). Concomitantly, there has been a greater focus on mental health consultation as one part of psychological services in the schools (Berlin, 1967; Fine & Tyler, 1971; Meyers, 1973), where Caplan's (1970) distinction between client-centered and consultee-centered consultation has been useful. Briefly, in client-centered consultation the teacher's problem relates to the management of a specific student(s), and the consultant helps to focus on a solution for this student's problem. In consultee-centered consulta-

[1] Based on a paper presented at the Annual Convention of the American Psychological Association, Honolulu, 1972.
[2] Requests for reprints should be sent to Dr. Joel Meyers, Department of School Psychology, Temple University, Philadelphia, Pennsylvania 19122.

©1975 Plenum Publishing Corporation, 227 West 17th Street, New York, N.Y. 10011. No part of this publication may be reproduced, stored in a retrieval system, or transmitted, in any form or by any means, electronic, mechanical, photocopying, microfilming, recording, or otherwise, without written permission of the publisher.

tion, the consultant focuses on the difficulty of the teacher (consultee) rather than on the student (client).

A review of the literature reveals a serious weakness in that there is very little empirical research relating to mental health consultation in schools (Meyers, 1973). Even though Caplan (1970) has underscored the importance of developing adequate research techniques to demonstrate the effectiveness of consultee-centered consultation, there are few examples of related empirical investigations. Furthermore, the few attempts to research this area have been weak in their reliance on self-report measures rather than systematic behavioral observations as the criterion for effectiveness of consultation (Schmuck, 1968; Tobiessen & Shai, 1971).

Behavior modification constitutes one approach to client-centered case consultation, and this is a form of mental health consultation for which there are data demonstrating effectiveness in changing student behavior. Several studies have demonstrated that teacher attention can be used to modify a variety of student behaviors (Cossairt, Hall, & Hopkins, 1973; Hall, Lund, & Jackson, 1968; Thomas, Becker, & Armstrong, 1968). However, a recent investigation (Cossairt et al., 1973) accurately noted that most of this research has not examined the techniques which the consultant can use to modify the teacher's behavior. Furthermore, Abidin (1972) has suggested that the effects of behavior modification may fail to generalize when the consultant does not attend to the teacher's values and expectancies. Caplan's (1970) consultee-centered consultation provides one framework within which the consultant can communicate understanding for the teacher's values and expectancies, and consultee-centered techniques may often provide an important supplement to some client-centered techniques. The general importance of consultee-centered consultation is one reason why related research is needed.

The purpose of this paper is to present data supporting the effectiveness of both client-centered and consultee-centered consultation. Particular emphasis is given to the data which suggest that attention to teacher affect through consultee-centered consultation can have a generalized effect in reducing disruptive classroom behavior.

METHOD

Subjects and Setting

This study was carried out at an elementary school in a predominantly black urban area. A first-year teacher of a third-grade classroom with 25 students requested the psychologist's help with classroom management. Continuous student disruption, lack of teacher control, and frequent yelling by the teacher

characterized the classroom. This classroom is the setting in which this study was carried out.

Two of the children whom the teacher perceived as her greatest problems were observed, and client-centered consultation led to an individual treatment plan for one of these *S*s. The original plan was to implement successive treatments for each child; however, only one *S* received individual treatment because behavior problems with the class as a whole dictated a shift from client-centered to consultee-centered consultation.

Experimental Procedures

Disruptive behavior was recorded with a check for every 10-second interval in which the observed student showed any disruptive behavior. Each time a child was observed, his behavior was recorded for a 10-minute period. Percent of intervals containing disruptive behavior was defined as the number of 10-second intervals within a 10-minute period in which disruptive behavior was recorded, divided by the total number of 10-second intervals, multiplied by 100.

Disruptive behavior was defined as any out-of-seat behavior (i.e., running, fighting, or standing more than 3 feet away from the student's desk) or any talking behavior (i.e., any inappropriate vocalization that was audible to the observer) which was not part of the class assignment. One of the two students (S_1) was chosen as the focus of individual remedial efforts. This girl's disruptive behaviors included leaving her seat, calling out, talking to others, not attending to classroom work, and following the teacher around the room. One important characteristic was that these behaviors indicated that S_1 may have been seeking teacher attention, and during baseline condition we observed that she would often smile and change her behavior when receiving teacher attention. S_1 was chosen as the initial focus of consultation techniques since her behavior had the potential to be modified by teacher attention.

Reliability checks were taken on 3 separate occasions of one hour each. A second observer made simultaneous observations of the same two children on these occasions. Agreements were determined according to whether or not each 10-second interval contained disruptive behavior. Percent of observer agreement as to whether the 10-second intervals contained disruptive behavior was computed by dividing the number of intervals of agreement by the total number of intervals, multiplied by 100. Reliability coefficients of 89%, 83%, and 91% were obtained.

The teacher and psychologist developed a treatment plan for S_1 which included two aspects. First, the teacher was instructed to use positive attention to reinforce any of S_1's nondisruptive behaviors which she observed. Thus, the teacher reinforced S_1 when S_1 was both not talking and seated with her head directed toward the book or the teacher. The second part of the treatment plan

was that the teacher was instructed to either ignore disruptive behavior, or discipline S_1 in a relatively nonemotional manner. Nonemotional discipline included firm reprimands but it excluded shouting by the teacher.

Positive attention was described to the teacher in terms of verbal and nonverbal behavior. Verbal positive attention included any positive praise statements, such as: (1) "I am happy to see you working." (2) "You have really been paying attention today." (3) "I like the way S_1 is listening to our story." Nonverbal positive attention included teacher-initiated positive physical contact between teacher and child and teacher's smiles directed toward S_1.

Experimental Conditions

Baseline Condition. The baseline condition consisted of observing the percentage of 10-second intervals within each 10-minute period that the two students (S_1 and S_2) exhibited disruptive behavior. The operant level of disruptive behavior was determined for S_1 from 12 observation periods obtained during the first 8 days of the study. The disruptive behavior for S_2 in this condition was determined from 14 observation periods obtained during the first 8 days of the study. There were not an equal number of 10-minute observations of the two students during baseline, and this was also the case in each of the subsequent experimental conditions. In addition, for any one of the two *S*s, the number of 10-minute observation periods was not equal across the 4 different experimental conditions. The unequal number of observation periods occurred in this study for two reasons. First, on some days one or more children were absent or out of the room. Second, the problems in the entire class were judged to be serious enough to take precedence over a perfectly designed investigation of one child's behavior. Consequently, time pressures resulted in shortened treatment and reversal conditions, and a lengthened reinstatement of treatment condition.

Treatment Condition. During the treatment for S_1, the teacher reinforced S_1's nondisruptive behavior with positive attention and tried to ignore S_1's disruptive behavior. There were 10 observation periods for S_1 and 6 observation periods for S_2 during the 4 days in which treatment data were collected.

Two specific steps were taken to support the teacher's implementation of the treatment plan. First, client-centered consultation conferences were held in which the consultant sought the teacher's suggestions. Second, after each observation the consultant left brief notes to the teacher describing instances where she had successfully implemented the reinforcement program and also describing incidents where she had not adequately implemented the reinforcement program.

Reversal Condition. During the reversal condition, the teacher discontinued the treatment for S_1. The percentage of disruptive behavior was determined from 10 observation periods for S_1 and 6 observation periods for S_2 during the 4 days of the reversal condition.

Reinstatement of Treatment Condition. Subsequent to the reversal condition, the teacher was instructed to reinstate the treatment condition for S_1. The disruptive behavior during this condition was determined from 20 10-minute observations for S_1 and 18 10-minute observations for S_2. This condition lasted for 8 days.

Consultee-Centered Consultation

Although the reinforcement program was apparently successful in modifying the behavior of S_1, the entire class remained at a high level of disruptive behavior throughout the baseline, treatment, and reversal conditions. The consistently high level of disruptive behavior was noted during informal observation by both the observer and the teacher's supervisor. Moreover, conversations with the teacher's supervisor revealed that not only the teacher but also the school administration was seriously concerned about the high level of disruption existing in this classroom.

It was determined that in addition to the treatment program for S_1, something immediate had to be done for the whole classroom. Therefore, even though consultee-centered consultation was not part of the experimental design, it was used concurrent with the reinstatement of treatment condition. This confounded the experimental results for both reinstatement of treatment and consultee-centered consultation.

The teacher had ambivalent feelings about being an authority figure and it was hypothesized that these feelings might interfere with her ability to control the class. For example, it was noted that the teacher treated her class in an apologetic manner, often explaining and excusing her actions. It appeared that she was not comfortable in the role of the authority figure, and during one consultation conference the teacher responded to a suggestion by saying, "The children would never let me get away with that."

The decision to use consultee-centered consultation was made during a teacher conference and consequently there was no prior chance to define experimental procedures. On the other hand, after the consultee-centered consultation sessions were completed, the procedures were defined as discussions in which the consultant mentioned observations regarding the teacher's feelings about being an authority figure and sought the teacher's reactions. They discussed her role in the classroom and the consultant reinforced the idea that as the teacher she was the authority in the classroom. These discussions helped the teacher verbalize her feeling that she had not felt comfortable as the class's authority figure and that this discomfort had interfered with her ability to teach the youngsters. Throughout these discussions, the consultant attempted to clarify what the teacher said about her feelings as an authority figure. In addition, the teacher was praised for verbalizing her feelings about being an authority figure. A total of three consultee-centered consultation sessions, lasting from 15 to 40 minutes,

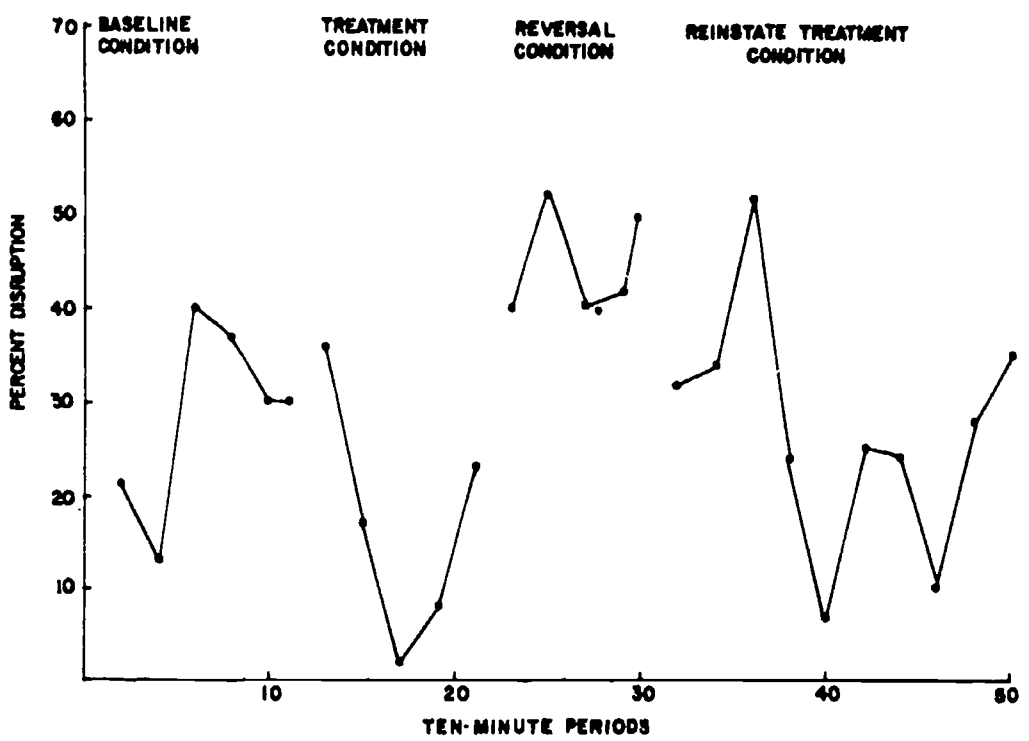

Fig. 1. Percent of disruptive behavior during the four experimental conditions for S_1. (Each point represents the combination of two observation periods.)

were devoted to the teacher's conflicts about being the authority figure, and they took place during the first two days of the reinstatement of treatment condition.

RESULTS

The study used a reversal design (A-B, A_r-B_r) for S_1. Figure 1 presents the percentage of disruptive behavior for S_1 during each of the four conditions (baseline, treatment, reversal, and reinstatement of treatment). During baseline there was a mean of 27% disruptive behavior. The second portion of Figure 1 reveals that there was a decline in disruptive behavior after treatment was implemented (average disruptive behavior = 17%). During the reversal condition, disruptive behavior increased (average disruptive behavior = 44%). The reinstatement of reinforcement contingencies was followed by another decrease in S_1's disruptive behavior (average disruptive behavior = 27%). Although the 27% disruptive behavior in the last condition represents a reduction from the 44% disruptive behavior during the reversal condition, it is no lower than the 27% reported during the baseline condition. However, a careful inspection of Figure 1 reveals that during the reinstatement of treatment condition there was a greater

decrease in disruptive behavior after the first six observation periods (the first three points representing this condition on the graph). Apparently, the reversal was so effective with this child that it took two days to bring her disruptive behavior back down.

Since an A-B, A_r-B, reversal design was used in this study, one-way analysis of variance procedures were used, consistent with the approach described by Gentile, Roden, and Klein (1972). In support of the observed reduction in S_1's disruptive behavior, this analysis revealed a significant treatment effect for S_1 ($F = 6.35$; df = 1,52; $p < .05$).

Although the original treatment was directed toward S_1, data were also collected for S_2. Figure 2 reveals that during S_1's baseline, treatment, and reversal periods the behavior of S_2 remained variable and unchanged. These data indicate that the treatment directed toward S_1 had no effect on the behavior of S_2, but they tend to suggest that consultee-centered consultation with this teacher decreased S_2's disruptive behavior.

Figure 2 shows that subsequent to the consultee-centered consultation (i.e., during the reinstatement of treatment condition) both the level and the variability of S_2's disruptive behavior decreased sharply. Since S_2's behavior had not been changed by the original treatment condition for S_1, it can be argued

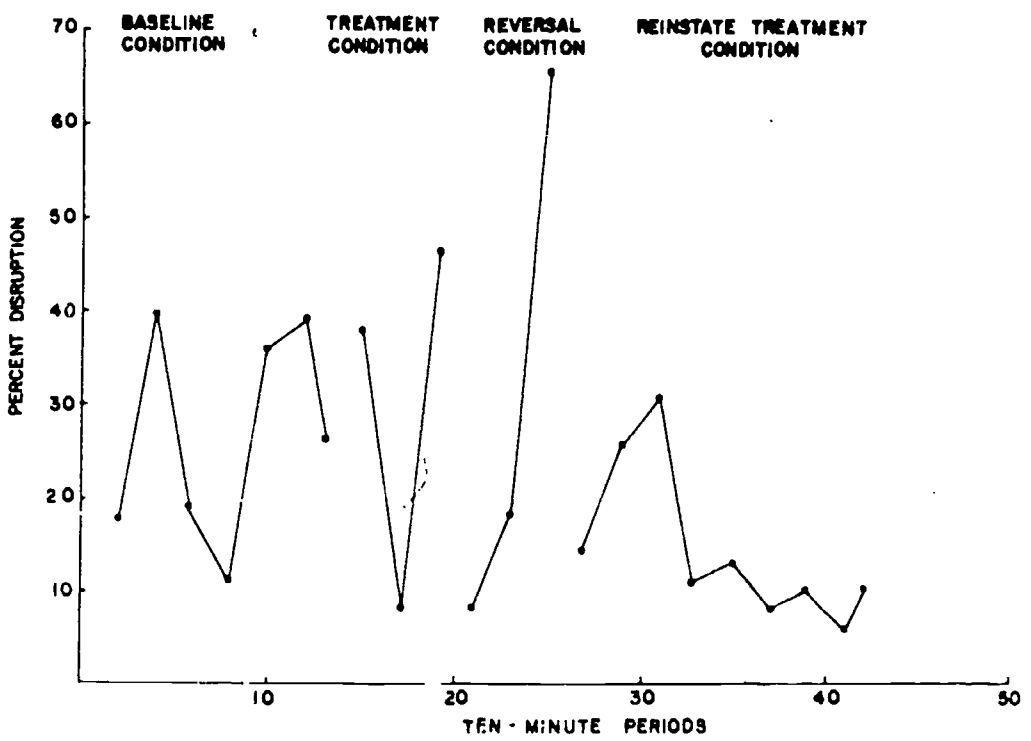

Fig. 2. Percent of disruptive behavior during the four experimental conditions for S_2. (Each point represents the combination of two observation periods.)

that S_2's behavior would also have remained unchanged in response to the reinstatement of the same treatment condition for S_1. One additional factor (consultee-centered consultation) was systematically manipulated during the reinstatement of treatment condition. Therefore, this factor (consultee-centered consultation) may have been responsible for the observed changes in S_2's behavior.

DISCUSSION

The major contribution of this study is that it is among the first to present data which indicate that consultee-centered consultation with a teacher regarding her attitudes and feelings can produce measurable changes in the behavior of children in the classroom. In this particular case, client-centered consultation about behavior modification helped a teacher to change the behavior of one child. The introduction of consultee-centered consultation focusing on the teacher's feelings as an authority figure was followed by a general increase in the teacher's effectiveness. The use of both forms of consultation contributed to the successful management of highly disruptive students. Furthermore, consultee-centered consultation proved to be an economical technique (only 3 sessions) with the apparent power to induce quick changes in disruptive student behavior.

This study successfully replicated one aspect of past research in behavior modification. It was found that teacher attention to nondisruptive behavior and ignoring of disruptive behavior led to a decrease in the disruptive behavior of one child. However, while this procedure had no observable effect on the remainder of the class, the consultee-centered consultation appears to have been followed by such generalized changes.

The observed changes in the disruptive behavior of S_2 were the primary basis for concluding that consultee-centered consultation did have a generalized effect. However, anecdotal observations of the class provided additional information suggesting that this technique was successful, since the dramatic decrease in S_2's disruptive behavior also appeared to characterize the class as a whole. This general decrease in disruptive behavior included less inappropriate talking, more in-seat behavior, fewer fights, and generally more orderly behavior. For the first time, the students would consistently respond to the teacher's directions. In one instance, the entire class sat quietly, listening attentively to the teacher read a story for a period of 15 minutes. This sort of control had previously not been observed in this classroom.

There were also changes in the teacher's behavior which supported the conclusion that consultee-centered consultation was successful. However, since this study was not designed to assess the effects of consultee-centered consultation, these changes were determined from informal observations rather than from systematically collected data. In the future, research designed to assess con-

sultee-centered c '•ation should include systematic observations of teacher behavior.

One of the observed changes occurred during the consultation conferences as the teacher's statements indicated that her feelings about being an authority figure changed. During the first session, the teacher stated that she felt uncomfortable as an authority figure and that she wanted to dissociate herself from such a role. On the other hand, by the third and last consultee-centered consultation conference the teacher's feelings appeared to be more positive. For example, during the last session the teacher mentioned that she had just begun reading a book which had a message relevant to her as a teacher. She indicated that while considering the statement "The home is your castle," the book made an analogy between the home and the classroom: Similar to the home, the classroom should be the teacher's castle. The teacher said she felt that this was the type of authority she would have to use in order to take control of her students.

Changes in the teacher's behavior in the classroom were also observed. One change was that she appeared to gain more control of herself, as she tended to yell less frequently. While shouting by the teacher decreased, often a word from her would be enough to inhibit disruptive behavior during class time. In addition, she was still able to find opportunities for praising the children and showing that she cared about them.

It should be remembered that the results bearing on consultee-centered consultation reported in this paper derive from a case study rather than from an experiment designed a priori to demonstrate the behavioral effects of this technique. In addition, it should be noted that, with the exception of the behavior changes systematically observed in S_2, the remaining observations of the teacher and the class were all anecdotal. Consequently, the data presented in this paper are limited and should be interpreted with caution.

Perhaps even more important than the actual results, this study reaffirms Caplan's (1970) suggestion that empirical researcl. is needed in this field. It points to one potentially productive approach to research — combining behavior-modification techniques with consultee-centered consultation.

As noted above, the literature in mental health consultation includes little empirical research. Frequently, one finds individual case studies and anecdotes as support for these techniques. One explanation for the dearth of research is that consultee-centered consultation takes on an individual form with each consultee. Therefore, it is presently difficult to define identical procedures for a large number of consultees, and this would be necessary for traditional statistical investigations. At this stage, research in consultee-centered consultation needs to develop experimental designs which are appropriate for studies using small numbers of consultees. This would make it more realistic to define clear consultation procedures while allowing for the individualized consultation that might be necessary.

Experimental designs from research in behavior modification offer one way to develop more intensive investigations with small numbers of consultees.

For example, multiple-baseline designs (Hall, Cristler, Cranston, & Tucker, 1970) are particularly appropriate for research in consultee-centered consultation since they can be used to provide experimental controls and to permit inferences about causality with as few as one or two subjects. Since the effects of consultee-centered consultation may often be assumed to be irreversible, multiple-baseline designs would be a more appropriate way to provide experimental controls than a reversal design. In the present study, a traditional reversal design was used to assess the effects of client-centered consultation on behavior modification in S_1. The introduction of consultee-centered consultation created a design similar to a multiple baseline, which was used to assess the effects of consultee-centered consultation on S_2. Since this part of the study was not designed a priori, the reinstatement of treatment condition was confounded with the consultee-centered consultation. Nevertheless, the present study points out the potential for the multiple-baseline design to detect the effects of consultee-centered consultation.

A more precise experimental use of the multiple-baseline design is found in a behavior-modification study designed to investigate procedures for changing teacher behavior (Cossairt et al., 1973). It found that in addition to instruction or feedback, social praise was an important ingredient in changing teacher behavior. Studies like this one can be used as models for developing research designs which are appropriate for consultee-centered consultation.

It was noted above that another weakness of some of the past research in consultee-centered consultation is that self-report measures administered to teachers and students have been used to assess the effectiveness of consultation. While these techniques provide some useful data, it is also important to demonstrate behavioral change resulting from consultation techniques. Research in behavior modification has demonstrated convincingly that behavioral observations can be used to assess the effectiveness of client-centered consultation; research in consultee-centered consultation also needs to develop appropriate observation strategies. In this investigation, systematic behavioral observations of clients revealed effects of both client-centered and consultee-centered consultation. Systematic behavioral observations of the teacher would have also provided important data on the effects of consultee-centered consultation.

In summary, client-centered consultation regarding behavior-modification techniques and consultee-centered consultation were used together to help modify the behavior of disruptive students in school. Although the results of this investigation are tentative, it was suggested that consultee-centered consultation is a potentially powerful and economical way to improve the general effectiveness of some teachers. Finally, this paper has underscored the relative lack of empirical research into the effects of consultee-centered consultation while pointing to some potentially effective experimental designs for future research.

REFERENCES

Abidin, R. A psychosocial look at consultation and behavior modification. *Psychology in the Schools*, 1972, *9*, 358-364.

Berlin, I. N. Preventive aspects of mental health consultation to schools. *Mental Hygiene*, 1967, *51*, 34-40.

Caplan, G. *The theory and practice of mental health consultation*. New York: Basic Books, 1970.

Cossairt, A., Hall, R. V., & Hopkins, B. L. The effects of experimenter's instructions feedback and praise on teacher praise and student attending behavior. *Journal of Applied Behavior Analysis*, 1973, *6*, 89-100.

Fine, M. J., & Tyler, M. M. Concerns and directions in teacher consultation. *Journal of School Psychology*, 1971, *9*, 436-444.

Gentile, J. R., Roden, A. H., & Klein, R. D. An analysis-of-variance model for the intrasubject replication design. *Journal of Applied Behavior Analysis*, 1972, *5*, 193-198.

Hall, R. V., Cristler, C., Cranston, S. S., & Tucker, B. Teachers and parents as researchers using multiple baseline designs. *Journal of Applied Behavior Analysis*, 1970, *3*, 247-255.

Hall, R. V., Lund, D., & Jackson, D. Effects of teacher attention on study behavior. *Journal of Applied Behavior Analysis*, 1968, *1*, 1-12.

Meyers, J. A consultation model for school psychological services. *Journal of School Psychology*, 1973, *11*, 5-15.

Schmuck, R. A. Helping teachers improve classroom group processes. *Journal of Applied Behavioral Science*, 1968, *4*, 401-435.

Thomas, D. R., Becker, W. C., & Armstrong, M. Production and elimination of disruptive classroom behavior by systematically varying teacher's behavior. *Journal of Applied Behavior Analysis*, 1968, *1*, 35-45.

Tobiessen, J., & Shai, A. A comparison of individual and group mental health consultation with teachers. *Community Mental Health Journal*, 1971, *7*, 218-225.

ORGANIZATIONAL CONSULTATION TO FACILITATE COMMUNICATION WITHIN A SCHOOL STAFF

NAOMI LENNOX, DENNIS FLANAGAN, AND JOEL MEYERS

Temple University

This article describes in detail an organizational consultation intervention designed to create a more effective learning atmosphere by improving intrastaff communication. Using an informal survey accompanied by feedback sessions, the authors were able to reduce the tense school atmosphere and develop a process for ongoing, cooperative problem solving within the staff of an urban public school. This concrete description with emphasis on practical considerations is offered to stimulate programs of intervention at the organizational level, which, although efficient, are rarely used consultation techniques.

In recent years, the literature discussing psychological services in the schools has stressed the indirect delivery of services to children through teacher consultation (Dinkmeyer, 1967; Fine & Tyler, 1971; Lambert, 1974; Meyers, Martin, & Hyman, 1977). Perhaps the most influential contributions to this trend have been made by Gerald Caplan, who has focused primarily on consultation to either individual consultees or consultee groups (Caplan, 1970). He has also suggested the potential of consultation to the school organization. In recent years, other professionals have begun to take leadership in asserting the potential of organization development consultation as one approach in delivering psychological services to schools (Gallessich, 1972; Schmuck & Miles, 1971; Schmuck & Schmuck, 1974).

Generally, organization development consultation can be thought of as a method directed toward changing the school's functioning by improving communication in the system. Gallessich (1972) has emphasized three important aspects of this approach to consultation that help to accomplish the above goal. First, the system, not the student, is conceptualized as the client. Second, the goal is to facilitate the overall growth of the organization (i.e., the school). Third, the consultant's focus is on impeded communication, confused objectives, and decisions made with insufficient staff contribution. A frequent focus of the resultant intervention strategies is to facilitate communication between relevant subgroups.

Two types of organization development consultation have been described (Meyers, Martin, & Hyman, 1977). The first type involves consultation designed to facilitate the resolution of specific organizational problems faced by the school. Organizational consultation has been offered to schools in successful efforts to reduce racial tension (Snapp & Sikes, 1972), deal with confrontation by rebellious students (Berlin, 1970), and cope with the process of bereavement (Meyers, 1976). The second type of organization consultation involves a focus on general interpersonal and communication problems in the schools. Although there have been some successful efforts reported (Schmuck, Runkel, & Langmeyer, 1969, practitioners in the schools often feel that this approach to consultation is unrealistic because staff resistance may be likely. It can be argued that resistance might occur when there is no specific problem identified as the focus of consultation from the outset. Whereas we agree that resistance can occur, it is our view that there are some school problems which can be facilitated *only* through this approach. To expedite the appropriate use of organizational consultation, there is a need for concrete descriptions of such programs, with a particular emphasis on the practical realities, both positive and

Requests for reprints should be sent to Joel Meyers, Dept. of School Psychology, College of Education, Temple University, Philadelphia, PA 19122.

negative. It is the purpose of this paper to demonstrate one such program in sufficient detail that the account may be useful to other practitioners in evaluating the merits of this method.

CONSULTATION

Setting

The school in which this intervention was carried out is a special education facility operated under the auspices of a public school system in an urban setting. The faculty included one principal, twenty teachers, and a Special Pupil Services Team, consisting of a school psychologist, school social worker, learning consultant, and a speech therapist.

Before consultation was initiated, the climate of the school was incompatible with an effective learning atmosphere. Among the causal factors was the tumultuous political atmosphere of the school district. In addition, there was a feeling of tension and suspicion present in the school, caused partially by the fact that some staff members viewed the principal as authoritative and autocratic. Contributing further to the tension was the presence of a full time Special Pupil Services Team. As representatives of the Special Services Department, the team was frequently in conflict with the principal and/or the teachers. There was some confusion about the extent of the team's power and authority and, as a result, teachers were often apprehensive in their relationships with individual team members. The teachers as a whole had considerable experience and tended to continue using methods they had adopted in the past. There appeared to be a general reluctance to seek out innovative approaches to student problems.

In the first year of assignment to the school, the school psychologist became aware that the stressful atmosphere was affecting the education delivery system. Suggestions for various in-service programs and various alternative systems, such as informal discussions, met with resistance. The increasing discontent of the faculty was made public when a crisis arose and a grievance was filed against the principal by a group of teachers. It was at this point that assistance was sought by the principal in an effort to improve personnel relationships and increase organizational effectiveness. Caplan (1970) has suggested that a crisis situation can reduce resistance while facilitating change. In this instance, the teacher grievance was the crisis providing the impetus for the principal seeking help.

Two consultants were approached for suggestions to help with the problem. One was the school psychologist on the Special Pupil Services Team, who had been present in the school for the past two years. The other was a practicum student in mental health consultation from a local university, who had been in the schools for only a few weeks.

The school psychologist felt that being part of the school's organizational hierarchy would be a detriment in assuming a direct role in consultation. Negative feelings toward the psychologist, from some of the teachers, were already perceived. It was anticipated that any attempts at solution made by the psychologist would be met with teacher resistance. Therefore, it was thought that utilizing the services of the practicum student, unknown to the staff, would be more objective and more acceptable. This outside consultant could author all communication to the staff and act as mediator and facilitator at the feedback sessions. Even though someone else was brought in to assume a direct role, it would still be possible for the in-house psychologist to maintain an active role throughout the project, with input on the development of a questionnaire, analyzing the results, and on procedural problems.

Goals

The long-term goal was to establish an ongoing process to improve and maintain open communication. To accomplish this, a series of short-term goals was established: (a) to initiate discussion among the faculty, which had become splintered, (b) to foster better understanding within the group, making everyone aware of the particular problems encountered by their fellow workers in fulfilling their respective roles, and (c) to indentify and promote support systems that would facilitate problem solving. The desired cumulative effect was the development of a new sense of security that would manifest itself in open communication and flexible problem solving in school-related areas.

Instrument

In order to achieve the above goals, the format chosen was survey, followed by several feedback sessions. It was hoped that this format would provide a framework in which anxiety relating to the existing interpersonal tensions could be reduced. Specific attempts were made to reduce staff resistance and suspiciousness: phrasing the questions so as to focus on general rather than individual sources of conflict, insuring anonymity on the questionnaire, removing the threat of administrative reprisals, and maintaining the equality of participants at the feedback session. Knowing that this staff was disenchanted because previous projects had never proceeded to a remedial stage, emphasis was placed on the development of a process for cooperative problem solving.

By querying the principal, teachers, and specialists informally, areas of conflict and distorted communications were identified. From these, a 26-item survey was developed covering the following areas: General Communication, Communication between teachers and the Special Pupil Services Team, Communication between teachers and the principal, Communication between teachers and teachers, Student Discipline, and In-Service Program. (Note: See Table 1 for a list of the questions asked.) The questionnaire was a series of statements to which the respondent was to circle the degree of agreement on a five-point scale, ranging from 1 (Most Disagree) to 5 (Most Agree). Number 3 had the heading No Opinion. Some of the statements were worded positively and some negatively, so that each question had to be considered individually.

The questionnaire, with a letter explaining the purpose, goal, and process of feedback, was distributed to the entire staff.[1] Participants were asked to return the completed form at the end of one week. In order to encourage greater response, the deadline was extended one week, so that the staff had a total of two week in which to return the questionnaires.

Tabulation

Although the results were tabulated to report back to the faculty, specific content was of little importance in terms of the intervention. The questionnaire had been conceptualized from the beginning as a tool to initiate discussion at the feedback sessions, rather than as a sophisticated psychometric instrument.

Twenty-two of the 32 questionnaires (69%) were returned. In order to facilitate presentation of the results, the five categories were collapsed into three: those who agreed, those who disagreed, and those expressing no opinion. Responses on the survey indicated that teachers were not always clear or consistent in their perception of the problem that was important, and these contradictory results became the basis of productive discussions during the feedback sessions. Results of the survey can be found in Table 1.

TABLE 1

Communication Survey Results[1]

		Agree	No Opinion	Disagree
1.	Teachers not given enough information about students	45%	14%	41%
2.	Administration too picky about little things	41%	32%	27%
3.	Not enough positive reinforcement to teachers'	64%	13%	23%
4.	Child Study Team is supportive and helpful	45%	23%	32%
5.	Child Study Team does not work fast enough	36%	9%	55%
6.	Not enough service from the Child Study Team	36%	23%	41%
7.	Child Study Team suggestions not realistic	36%	18%	46%
8.	Child Study Team could involve home more	45%	37%	18%
9.	Principal sometimes must make arbitrary decisions	55%	31%	14%
10.	Too many students sent to the office	59%	23%	18%
11.	The principal is helpful with problem students	46%	27%	27%
12.	The principal supports the teachers	64%	9%	27%
13.	The principal could do more to involve the home	45%	37%	18%
14.	The principal helps with teachers' special problems	64%	27%	9%
15.	Increased teacher/principal communication needed	64%	18%	18%
16.	Most teachers willing to help each other	64%	13%	32%
17.	This faculty unfriendly and "cliquey"	55%	22%	23%
18.	Teachers sometimes get too involved with students	55%	13%	32%
19.	Parents apathetic, not interested in school problems	64%	18%	18%
20.	Student home information used inappropriately	50%	36%	14%
21.	Not enough alternatives for disruptive students	86%	5%	9%
22.	Teachers willing to work with problem students	50%	18%	32%
23.	Principal disciplines, insufficient alternatives	77%	5%	18%
24.	Teachers desire in-service programs during school day	77%	14%	9%
25.	Teachers are interested in improving teaching skills	64%	9%	27%

Feedback Sessions

The feedback sessions began at the end of the pupil day, which was 2:20. By contract, the teachers had to remain in the building until 2:50. Even though these sessions were publicized as being entirely voluntary, it was hoped that attendance would be enhanced, since the first thirty minutes were during the official working day. It should be noted that it is frequently difficult to get teachers who are members of bargaining units in urban school systems to stay beyond the contracted working day. In the event that the staff did remain and the sessions ran longer, the prearranged cut-off time was 3:50, giving each meeting an hour and a half span. The results were grouped according to area (i.e., General Communication, Communication between the teachers and the principal, etc.), and each area was presented separately, on an overhead projector, allowing as much time

[1]Copies of the complete form of the questionnaire used, as well as the letter sent to the teachers introducing the project, can be obtained by writing to the senior author.

as needed for discussion. A printed copy of the tabulated results of the entire survey was distributed to everyone at the end of the first session.

Feedback necessitated three separate meetings, held one week apart and lasting until the designated time of termination. The attendance was better than expected: of the 32, 22 attended the first session, 19 attended the second, and 12 attended the third. The most recently acquainted consultant was chosen to act as mediator and facilitator, since he had not been indentified as allegiant to any subgroup. Several statements from the questionnaire proved to be incentives for extended discussion. Each session seemed to have a central theme: the first session emphasized ventilation of angry feelings, the second emphasized a strong defensive posture, and the third emphasized a quest for concrete solutions.

Meeting 1. The presentation of the resilts of the first question (Teachers not given enough information about their students) precipitated a discussion that lasted for over half an hour. However, the bulk of the discussion focused on several staff members publicly grieving over old wounds, rather than on the actual question itself. Many negative comments were directed at specific persons, most of whom were not at the meeting. So hostile was the atmosphere that explanations for the actions in question were not accepted or even considered. Most seemed intent on verbalizing their individual vendettas.

Meeting 2. Several of the faculty members who were most outspoken from the previous meeting were notably absent from the second meeting. The nature of this meeting was more defensive, with the use of rationalizations to justify perceived shortcomings both of individuals and of the group. Some teachers blamed part of the school's problem on the district's policy, others talked about the difficulties inherent in special education, and still others defended the interrelationships of the staff. There was a quiet, almost overly formal, tone to this meeting. Rather than the spontaneous outbursts of the previous meeting, speakers waited for recognition from the moderator and/or the principal before speaking.

Meeting 3. Although only half the faculty attended this meeting, those present appeared ready to assume some of the responsibility for the problems that existed in the school. Issues raised by the survey were dealt with quickly, and attention was turned to future plans for meeting. While one member tried to blame problems on the district administration and the parents, another stated that "75% of this school's problems could be settled right here in this building." The consensus was that these meetings were not only interesting but beneficial, and that this process should continue in order to resolve some of the problem areas that had been defined. The members in attendance at this meeting expressed confidence in their ability as a group to maintain open communication and to reach practical and acceptable solutions.

Discussion and Conclusions

Success of Consultation

This was an applied project designed to facilitate communication within the system during a crisis, and it was not designed with a comprehensive evaluation component. Therefore, although several anecdotal observations suggested that consultation was successful, definitive conclusions cannot be reached. Instead, it is hoped that these observations will stimulate further research, as well as increased implementation of organization development consultation.

One way in which success could be observed was in the extent to which consultation goals were achieved. The goal of establishing a mechanism for ongoing open communication was achieved, and as of this writing, bimonthly discussion sessions were instituted for the duration of the school year. The staff worked cooperatively on a discipline code. The feedback sessions provided the catalyst to reopen communication within the school community. The faculty became more aware of the problems encountered by the different disciplines in the school. Mutual support systems were recognized; the principal became cognizant of the continuing support of staff members, and they in turn realized his concern for their professional needs. Informal responses from the teachers indicated that at least some of them felt more comfortable in dealing with various school personnel and felt less isolated. Many concurred that a healthier atmosphere had developed. The most tangible evidence of the above was that the grievance against the principal was dropped.

The second way in which the success of this project can be assessed is by analyzing the themes of the three feedback sessions. At the first session, hostility between groups was so intense that it had to be recognized and dealt with before taking any constructive steps. Personal anger had to be expressed before individuals would allow themselves to become more tolerant or understanding of other members. After the expression of their individual anger in the first meeting, group defensiveness emerged during the second session. There was an attempt to accept the problems of other staff members, while denying their own part in the overall situation. By the third meeting, those present were ready to acknowledge their responsiblility for the problem, enabling them to assume responsibility in the solution. It should be noted, however, that this effect may have been due in part to the fact that half of the more vocal and negative teachers had absented themselves by this third session. Nevertheless, the remaining staff included several who were also acknowledged leaders. Although just as critical of school procedure and climate initially, this group was able to develop a more positive, goal-directed attitude, thus establishing new group norms that focused on problem solving and change, rather than dwelling on destructive criticism. These members formed the nucleus for generating an intervention program that was successfully carried out after consultation ended.

Key Issues in the Consultation

A major concern of the consultant in relation to this type of intervention was how to deal with the sudden outpouring of long-suppressed feelings during the discussions. The possibility of losing control of the situation was a very real threat. While it was felt that the expression of hostility needed to occur before any constructive growth could be achieved, such expression had to be limited to factors relevant to the school setting and not be allowed to include personality or social conflicts. It was the moderator's job to maintain the focus of the discussion while allowing all those with a need to speak an opportunity to do so. A minimum of intervention was desired in order to permit the participants to confront their anger and deal with it openly. The major difficulty was in assuring everyone the opportunity to speak. Once being recognized, a speaker was reluctant to yield to another, and it was necessary for the moderator to take an active role in gatekeeping. As the group progressed in later sessions, the role of the consultant changed. During the second session , the consultant's role was less active in terms of input, and he became more of a chairperson, recognizing speakers and introducing new topics. By the third session, the consultant was able to fade from the discussion even further, acting solely as a resource person, when requested.

Despite many specific children in need of help, this intervention focused on the entire school as the client (Gallessich, 1972). It was felt that growth and change at this organizational level were necessary before interventions with individual children could be successful. Furthermore, this intervention sought to facilitate communication between various subgroups in the school, such as teachers, child study team, and principal. By beginning to alleviate the impediments to communication between these groups, an atmosphere of improved problem solving was initiated.

This program raises ethical issues that must be considered by those who implement this approach in the future. In this instance, three consultation sessions attempted to open communication between professional colleagues, and some of this communication involved intense negative feelings. We think consultants must consider carefully their professional responsibility to prevent the expression of such feelings from having long-term negative effects on the staff; for example, it would be naive to assume that three short group consultation sessions allow the consultant sufficient opportunity to provide the needed safeguards. Fortunately, in the present case the staff psychologist stayed on for the succeeding school year and was available to provide support to the staff. In addition to the possible use of existing staff in this supportive manner, the consultant must take steps to ameliorate this problem. Some possible safeguards are the following: (a) Do not discontinue the group sessions until there is evidence that any feelings that were exposed have been resolved. This can be determined through careful observation of the consultation sessions, as well as through formal evaluation of the consultation. (b) The consultant should make clear to the staff his or her availability to meet individually with anyone who has additional concerns they would like to discuss. (c) When feelings are discussed, the consultant must be in clear control of the group. It is the consultant's role to make certain that destructive feelings are not expressed.

This paper has provided a descriptive report of procedures, with anecdotal observations indicating success. Although reports of this nature are necessary at the present time in order to encourage organization consultation, future work should include additional experimental investigations demonstrating the impact of various specific procedures. Greater specificity in the description and experimental analysis of these procedures is needed to stimulate more effective and more widely implemented consultation techniques in the schools.

References

Berlin, I. N. From confrontation to collaboration. *American Journal of Orthopsychiatry*, 1970, *40*, 473-480.

Caplan, G. *The theory and practice of mental health consultation*. New York: Basic Books, 1970.

Dinkmeyer, D. The counselor as consultant to teachers. *School Counselor*, 1967, *14*, 294-297.

Fine, M. J., & Tyler, M. M. Concerns and directions in teacher consultation. *Journal of School Psychology*, 1971, *9*, 436-444.

Gallessich, J. A systems model of mental health consultation. *Psychology in the Schools*, 1972, *9*, 13-15.

Lambert, N. M. A school-based consultation model. *Professional Psychology*, 1974, *5*, 267-276.

Meyers, J. A consultation model to help a school cope with the process of bereavement. *Professional Psychology*, 1976, *7*, 559-564.

Meyers, J., Martin, R., & Hyman, I. (Eds.). *School consultation: Readings about preventive techniques for pupil personnel workers*. Springfield, IL: Charles C Thomas, 1977.

Schmuck, R. A., & Miles, M. B. (Eds.). *Organization development in schools*. Palo Alto, CA: National Press Books, 1971.

Schmuck, R. A., Runkel, P. J., & Langmeyer, D. Improving organizational problem solving in a school faculty. *Journal of Applied Behavioral Science*, 1969, *3*, 455-482.

Schmuck, R. A. & Schmuck, P. *A humanistic psychology of education: Making the school everybody's house*. Palo Alto, CA: Mayfield Publishing Co., 1974.

Snapp, M., & Sikes, J. M. Preventive counseling for teachers and students. *The Guidance Clinic*, 1972, *4*, 5-8.

Journal of School Psychology
1977 • Vol. 15, No. 4

SOME GUIDELINES FOR SCHOOL CONSULTANTS

JUDITH L. ALPERT
New York University

Summary: School consultation and its purposes are defined, the expansion of the school psychologist's traditional diagnostic role is explored; and some guidelines from research and theory which will assist the school psychologist to maximize the effect of consultative efforts are presented.

School consultation is defined here as a process of interaction between two or more adults, one of whom is a psychologist. The purpose of school consultation is to modify interactions between individuals and subgroups in the school and between the school and its surrounding community in order to facilitate pupil learning and pupil mental health. From this definition it follows that consultation is an expansion of the school psychologist's traditional diagnostic role. The psychologist makes her-his own referrals as well as responds to referrals; (s)he is concerned with prevention as well as with remediation; (s)he is responsible for the subsystems in the school which affect the pupil as well as the pupil; and (s)he uses social psychological, ecological, and research skills as well as clinical skills.

Given this broad definition of the school psychologist's role, the psychologist's concerns are numerous and therefore the importance of maximizing consultative effectiveness is clear. The purpose of the present paper is to present some guidelines from research and theory from planned change in social systems in order to assist the school psychologist to maximize the effects of consultative efforts.

The table that follows summarizes the main concepts and components that are relevant to the above broad definition of school psychological consultation and enables an understanding of consultation and a consideration of the guidelines. Aspects of the table will be explained below.

TARGET OF CHANGE

The first column of the table represents a simplified organizational diagram of a school and indicates that there are three levels of interaction: societal, school, and classroom. The societal level includes those school personnel who interact with parents (i.e., superintendent, principal, and teachers). On the school level, there are interactions between superintendent and principal, principal and teacher(s), and teacher(s) and teacher(s). On the classroom level, there is interaction between teacher and child(ren). This diagram of patterns of school related interactions does not include key elements such as the board of education, school board, and pupil personnel services. For purposes of brevity, these were omitted. Interaction between pupils (pupils ↔ pupils) are excluded because the present definition of consultation precludes direct

This manuscript is based on a paper presented at the meeting of the National Association of School Psychologists, Atlanta, April 1975. The author is indebted to Harold Jarmon and to students in her school consultation course who made many comments on an earlier draft.

Table 1
Concepts and Components of School Consultation

Target of Change	Hypotheses	Assessment	Intervention	Evaluation
(Society) Superintendent ↕ Principal situation ↔ Teacher(s) Pupils	Theory Research and Experience	Observation, interview, questionnaire, other unobtrusive measures, such as content analyses of communication between school and parent	Rational-empirical (e.g. lecture) Normative-re-educative (e.g. groups) Power-coercive (e.g. union)	What? attitude scales observation systems How? process report ask others
(School) Superintendent ↕ Principal ↕ Teacher(s) ↔ Teacher(s)	Theory Research and Experience	Observation, interview, questionnaire, other unobtrusive measures, such as content analyses of announcements over P.A. system	Rational-empirical (e.g. lecture) Normative-re-educative (e.g. groups) Power-coercive (e.g. union)	What? attitude scales observation systems How? process report ask others
(Classroom) Teacher ↕ Pupil	Theory Research and Experience	Observation, interview, questionnaire, other unobtrusive measures, such as content analyses of books	Rational-empirical (e.g. lecture) Normative-re-educative (e.g. groups) Power-coercive (e.g. union)	What? attitude scales observation systems How? process report ask others

Note. The school psychologist is the agent of change.

services to pupils. That is, the consultant works with teachers or other school staff and does not provide direct services to pupils. Therefore, if a shift in pupil-pupil interaction results from consultative intervention, it is from intervention directed toward the teacher or other school staff. As will be pointed out more fully below, subsystems affect each other, and change in interactions at one level may facilitate changes at other levels.

It should be noted at the outset that although the first column of the chart diagrams the formal interaction patterns within most schools, it may not describe the dominant interaction patterns in all schools. In some schools, for example, principals may communicate frequently and directly with pupils, and possibly that interaction should be conceptualized as a target of change. Even when this is not the case, a target of change may be the establishment of such a link.

Also, the relationship between this table and Caplan's model (1970) should be noted at the outset, since that model is most frequently referred to by school psychologists. Case consultation, according to Caplan, concerns problems of individual pupils. The specific goal of case consultation is to help the consultee who, in schools, is usually the teacher, work more effectively with the client who, in schools, is usually a pupil. Caplan notes that case consultation differs regarding direct target of change. In client-centered case consultation the target is pupil, and consultant's main focus is to directly diagnose the difficulties of the pupil. In consultee-centered case consultation the target is teacher, and the consultant's main focus is to assess the nature of teacher's work difficulty and help him/her handle this. Returning to the chart, case consultation relates to the classroom level. Since the present definition precludes direct service to pupils, client-centered case consultation is not represented here.

According to Caplan, the second major type of consultation is administrative consultation, which concerns problems of process, program, and policy. Caplan notes that administrative consultation differs regarding concern, either consultee-centered or program-centered. In consultee-centered administrative consultation the focus is on such issues as communication and decision making among staff, while program-centered administrative consultation concerns omissions or faulty programs and difficulties inherent in changing policy. Returning to the chart, both types of administrative consultation relate to the school and societal levels.

In selecting the target of change, three guidelines emerge from research and theory from planned change in social systems.

Guideline One. Focus change efforts on person or subgroup in the interaction who is higher on the organizational chart. Although the goal is to change the interaction, the consultant directs change efforts toward one person or subgroup involved in the interaction, and it is toward that person or subgroup in the interaction who is higher on the organizational chart. The assumption is that change in one person or subgroup will result in change in the other. That is, subgroups are interrelated. Change in one part of the subsystem is facilitated by complementary and reinforcing change above and below that level. Classroom climate studies (Thelen, 1950; Schmuck, 1966), as well as early studies on leadership (Lewin, Lippitt, & White, 1939), for example, support the flow of effect from teacher's leadership style to patterns of pupil interaction. It follows that by altering teacher behavior with pupils, pupil interactions with pupil will shift.

By selecting the person or subgroup in the interaction who is higher on the organizational chart, institutional pay-off is maximized. Learning resulting from the intervention may be generalized to future cases. The person higher, rather than lower, on the

organizational chart more frequently has interventions similar to the one which is the target of change. Thus, the higher directed intervention may have a preventive and remedial function and utilize power influence. It is an interactional notion of causality and an assumption about change and expediency which leads to the directing of efforts to the higher person in the interaction. Clearly, in some cases, change may need to be directed to both parties in the interaction in order for either to change. Also, of course, the more change efforts, the more change. Change efforts directed toward every member of the school staff, however, are not practical. Guideline One merely presents one way of conceptualizing the maximization of institutional pay-off.

Guideline Two. Focus efforts toward changing several interactions in order to change any interaction. Multiple change efforts are supported by the work of Lewin (1951) and Festinger (1962). In general, change is more likely to occur if focus is also directed to other interactions which, if altered, would complement and reinforce the initial target of change.

Guideline Three. Focus change efforts toward those higher on the organizational chart who are related to the interaction which is the target of change. While Guideline One calls for change efforts directed to that party in the interaction who is higher on the chart and Guideline Two calls for multiple change efforts, Guideline Three suggests a specific target for one of the multiple change efforts. According to Guideline Three, change efforts should be directed to nonmembers of the interaction which is the focus of change efforts. The nonmembers, however, will be higher on the organizational chart than those involved in the target interaction. For example, the highest interaction on the table presented in this paper is the interaction between superintendent and principal. If an alternation in this interaction would more easily enable change in the target interaction, it should be attempted. If not, the consultant should continue to go down the chart until he finds that interaction which is highest on the chart and which, if altered, would more easily enable change in the target interaction. Guideline Three, then, extends Guideline Two in directing the focus of one of the multiple change efforts.

The reasoning supporting Guidelines One and Two and concerning the maximization of institutional pay-offs and inter-relatedness of subgroups is the basis for these guidelines.

An example of the application of these guidelines follow.

Example A. A first-grade child was almost completely on his own in the classroom. He played in the back of the room while the other children were involved in group or class activities. His only contact with other children was when he hit them or took something from them. Even these acts received little teacher response. In this example, the target of change is the interaction between teacher and pupil. First, the psychologist attempts to modify the interaction by directing consultation to the teacher, the person in the interaction who is higher on the organizational chart. Her behavior is more likely to change if she can better understand the dynamics underlying her and her pupil's behavior and the effect of their behavior on the other pupils. In addition, this altered perception may affect the teacher's interactions with other children. Teacher learning should be generalized to her work with other children who exhibit disruptive behavior and need much firmer limits.

In this example, the teacher did not establish rules with what she believed was a severely disturbed child because she did not know what to do if the rules were disobeyed. This leads to Guideline Two. According to Guideline Two, the psychologist attempts to change other interaction patterns in order to facilitate the teacher's new

behavior. Therefore, in this example, the psychologist may focus also on the interaction between teachers. A teacher may be able to modify her interactions with a pupil (and therefore modify pupil behavior) if others provide needed support. Returning to the example, perhaps another classroom could serve as a setting in which the child could reflect on behavior and rules when unresponsive to teacher limits.

According to Guideline Three, change efforts should be directed to nonmembers of the target interaction, who may indirectly affect the target interaction. The nonmembers will be higher on the chart than those involved. Applying Guideline Three to this example, change efforts may be directed to the principal-teacher interaction. The principal may need to alter his perception of teacher's role in order that teachers utilize each other's classroom as reflection settings, as suggested above.

In sum, once the interaction which is the focus of change has been selected, change efforts should be directed to the person or subgroup higher in that interaction. Other related interactions should also be foci of change, and particularly that related interaction which is highest on the organizational chart should be considered.

HYPOTHESES

Hypotheses are based on what one knows about schools before one visits a school. Hypotheses give individuals direction as to where to look for problems in schools. Hypotheses are hunches about potential problems based on conceptualizations of interpersonal relationships, attitudes, school roles, sex roles, learning processes, and behavior management. They alert the consultant to interactions which might be foci of change efforts. Since there are individual differences across schools, however, hypotheses should be conceptualized as hunches rather than data. Hypotheses can be derived from theory and research from social systems theory and the social psychology of education. Sarason's (1971) discussion of the overt behavior and programmatic regularities in schools provides a basis for developing some hypotheses.

One set of hypotheses is based on a conceptualization of one's role in the school. For example, the hierarchical relationship between principal and teacher(s) limits communication in most schools. That is, the principal is responsible for the hiring, firing, and granting of tenure to faculty. Such role functions make it difficult for the teacher to seek suggestions, support, or advice from the principal. Also, the hierarchical relationship between principal and teacher(s) inhibits help-seeking behavior by the principal. That is, the principal has overall responsibility for the school. Some teachers and principals believe the principal should be expert in all areas related to education. This perception makes it difficult for the principal to admit lack of knowledge or to request advice from others in the school.

Similarly, on the classroom level, the hierarchical relationship between teacher and pupil(s) limits communication in classrooms. The teacher is the expert; the pupil is the learner. The teacher knows; the pupil does not. Such role conceptions make it difficult for some teachers to admit lack of knowledge or to learn from pupils.

Example B. A specific and perhaps extreme example is provided from the author's work in one elementary school. The example supports the hypothesis regarding role conceptualization and communication patterns and indicates the interdependence of subsystems in a school. It is clear from the example that the hierarchical relationship between principal and teachers inhibits help-seeking behavior from both parties.

Finances were strained in the elementary school, and the principal, not having money for teacher salaries, was late in payment. The principal felt that the financial

burden was hers and was busy organizing more fund-raising activities. She did not share the school's financial burdens with the teachers since, it appeared, she thought the burden was hers alone. Although the teachers were concerned about their salaries, they also thought it was inappropriate to ask for or about it.

What was clearest during this one-week period of salary lag was that almost every interaction in the school was altered by this crisis. In fact, the author's visit to the school three days after salaries were due led her to believe there was a crisis. Although the author did not know what the crisis was, teachers' thresholds for classroom noise and responses to pupil error, as well as significant shifts in level of humor and hostility between teachers, indicated a critical situation. Clearly, the financial concern was felt and indirectly expressed throughout the school.

It is unlikely that the teachers would have found a means of securing money. However, open discussion about the exact reason for the delay and the projected date of payment may have alleviated or at least better directed the expression of anxiety. Moreover, some plan might have been developed in order to deal with some of the financial needs of some teachers. For example, although there was no money to pay all teachers their full salary, an immediate and partial payment of salary could have been arranged.

Relating this example to column one target of change further clarifies the guidelines. In this example, the target of change is the interaction between the principal and teachers. Guideline One would suggest directing change efforts to the principal, the person in the interaction who is higher on the organizational chart. Here, effort should be directed toward helping principal alter communication patterns with teachers. As stated above, open discussion about the exact reason for the delay and the projected date of payment may have alleviated or at least better directed the expressions of anxiety. It follows that if the principal had been supported to open the discussion, the teachers would have responded. Guideline Two supports directing multiple change efforts, and Guideline Three indicates that a change effort should be directed to high levels on the organizational chart which, if altered, could support the target of change. Thus, while working with the principal to openly discuss reasons for the salary delay, the consultant could work with the superintendent toward achieving more open communication in his interaction with the principal. It may be easier, that is, for the principal to share problems with teachers if the superintendent encouraged as well as role modeled more open communication.

ASSESSMENT

Assessment should consist of (1) need for change, (2) readiness for change, (3) target(s) of change, and (4) kind of consultant intervention that is most likely to have maximum pay-off. One and two will be considered here. Assessment of need for change involves the detection of interaction factors which are detrimental or potentially detrimental to pupil learning and pupil mental health. Assessment procedures then are used to validate and invalidate hypotheses as well as to gather data about other specific interactions which might be foci of change efforts. Assessment of readiness for change involves a consideration of the perceptions of individuals and subgroups in the school regarding need for change.

The procedures for both types of assessment are the same, and frequently both are made at the same time. The assessment column indicates that the procedures are, in general, the same across all levels and for each interaction. Some specific procedures

are listed on the chart. A thorough consideration of observation and interview methods are offered in Schulman (1974), and information about questionnaires and other unobtrusive measures can be found in Hornstein, Bunker, Burke, Gindes, and Lewicki (1971), and Schmuck, Runkel, Saturen, Martell, and Derr (1972). The concern in the present paper, however, is not with these procedures but rather with a more global consideration of assessment.

The columns in the table are interrelated. An assessment procedure, for example, may serve as an intervention. While the consultant may question individuals or subgroups in order to detect need for change or readiness to change, the questioning may serve as a catalyst for change. In addition, assessment procedures have a relationship building function. While the consultant is assessing, (s)he is also making him/herself available, building trust, and communicating that (s)he has something to offer. Three guidelines related to assessment follow.

Guideline Four. Conduct many assessments at any given time. While the consultant is intervening, or evaluating, or conducting a planned assessment, (s)he can make informal assessments of other interactions. Frequently informal unplanned assessments are more valuable.

Guideline Five. Reassess. Continuous reassessment is indicated because individuals, and therefore interactions, change. Over time interactions may become either more or less detrimental to pupil learning and pupil mental health. Or alternatively, an individual or subgroup may be more ready for change at one point than at another. For example, the initial assessment procedure may have served as a catalyst, and the person who was questioned at one point in time may be ready to work on altering some interactions another time.

Guideline Six. Involve many people in the assessment process early, at the assessment level. The diagnostic contributions of school staff and pupils can be helpful in identifying problems. Also, individuals and subgroups may be more positive about change if they have been involved in the early identification of targets of change. They may then serve as change agents of their own interactions rather than objects of change efforts. The consultant and consultee collaborate, then, in the consultation process. An example of the application of these guidelines follow.

Example C. An example at the classroom level is provided from the author's work in an elementary school, and the resulting research is considered in Alpert (1974). Observation of a first-grade teacher indicated that she spent more time with her high ability reading group than with her low group. Clearly, observation established the need for change in teacher's interaction with her low ability group. Moreover, informal interviews established the teacher's readiness to alter her interaction pattern with the low ability reading group. Specifically, when teacher was questioned about how long she thought she taught each reading group and should teach each reading group, her response indicated perception of and desire for equal treatment of the groups. In this situation, questioning the teacher about her behavior served as a catalyst for changing teacher-pupil interactions. When the teacher was asked how long she thought she instructed and should instruct each reading group, the teacher asked for feedback on her behavior. Following feedback and a discussion of reasons why time seemed to drag with the low group, the teacher clocked her sessions and gave equal time to the two groups.

Returning to the guidelines, Guideline Four states that multiple assessment should occur at any time. This example illustrates the value of careful observation. The assessment of teacher-reading group interaction was unplanned, and observation of teacher's discriminatory behavior toward the low reading group was made during a

time when the focus of diagnosis was a specific teacher-pupil interaction. According to Guideline Five, reassessments should be made. Although the teacher in this example was not ready to acknowledge or alter all discriminatory behavior, she considered some discriminatory behaviors to low ability pupils. In addition, there were periodic reassessments, and, over time, the teacher was ready to consider some underlying attitudes and additional behaviors. Lastly, according to Guideline Six, many people should be involved in the assessment process. In this example, the teacher could have been involved in identifying her own discriminatory behavior. In addition, this incident could have triggered our involving others to identify areas of discriminatory school practices, policies, and procedures to low ability pupils.

This example can illustrate further the first three guidelines. In this example, the target of change was teacher-reading group interaction. However, as Guideline One suggests, change efforts were directed to the person in the interaction who is higher on the chart, the teacher. Multiple as well as high change efforts were attempted also, as Guidelines Two and Three suggest. For example, another target change was the interaction among school staff. Specifically, a faculty meeting was devoted to a consideration of slow learners, and it may have served to complement and reinforce consultant efforts.

INTERVENTION

Consultants intervene in order to eliminate or alleviate those interaction factors which are detrimental or potentially detrimental to pupil learning and pupil mental health. Intervention strategies can be divided into three global categories: empirical-rational, normative-re-educative, and power-coercive. These strategies, as well as some techniques exemplifying them, will be discussed briefly. Then, some considerations in approaching interventions will be discussed. Since the focus of the present section is on the conceptualizing of interventions rather than a detailed consideration of strategies, the three general strategies will be considered only briefly. More complete information about the strategies can be found in Chin and Benne (1969).

Basic to the empirical-rational strategy is the assumption that people are rational. A technique most appropriate to schools and basic to this strategy to planned change is the providing of information on an individual or group basis and through, for example, literature, lecture, demonstration, discussion, and feedback. The intervention technique of information provision is exemplified below.

Example D. A first grader had become a social isolate following his epileptic attack in school. Questioning indicated that the teacher had responded adequately to the physical demands of the epileptic child. However, she had not discussed the attack with those pupils who had observed it.

Clearly, the teacher wanted a more natural exchange between this pupil and his peers. However, she did not know how to alter the situation. Providing the teacher with information about epilepsy and a means of presenting the information to pupils enabled teacher and child to discuss epilepsy with the class. The interaction between pupil and pupil(s) was changed because the teacher altered her interaction with pupils. That is, the epileptic child was no longer an isolate after the teacher and child communicated information about epilepsy to the class. In this example, teacher was able to alter her behavior when given information.

Basic to the normative-re-educative strategy is the assumption that norms, cognitions, and perceptions guide behavior, and that people will modify their behavior if these change. One technique based on this approach to planned change and more

appropriate to schools is the establishment of some school programs. What is crucial here is that group members have an involving, self-examining experience which results in the restructuring of some attitudes, values, habits, and norms within the school. Sarason, Levine, Goldenberg, Cherlin, and Bennett (1966), and Knoblock and Goldstein (1971) present running records of groups which, in general, indicate an alteration in the interactions of teachers. An example of a common school group is presented below.

Example E. A teacher group was formed. It was composed of all teachers in grades five through eight who were part of the departmental program. The group was formed for two reasons. First, although these teachers taught the same pupils, they seldom shared information about the performance of the pupils or methods most or least successful with each pupil. Thus, one purpose was to alter the communication pattern among teachers. Secondly, teachers were relatively unsophisticated about reasons for poor academic or behavioral performance. Psychological difficulties or low intellectual ability were seldom seen as reasons for undesirable pupil performance. In explaining pupil's undesirable behavior, teachers in this particular school offered such terms as "lazy" or "bad character." Thus, a second purpose was to alter teacher-pupil(s) interaction. Or, stated differently, the group was formed in order to change norms concerning teacher-teacher interaction and teacher-pupil(s) interaction and to alter perceptions and cognitions regarding reasons for pupil academic and behavioral performance.

The emphasis in power-coercive strategy is upon political and economic sanctions in the exercise of power. The techniques based on this approach to planned change include, for example, appropriation of federal monies, action of unions, and establishment of laws. One technique based on this approach to planned change concerns legal activity. Specifically, psychologists can be informed about laws, and may inform appropriate interest groups and administrators about laws and consequences for violation. Title IX of the Education Amendments of 1972, for example, prohibits sex discrimination in educational programs and activities in federally funded institutions. Violations of Title IX could be indicated to either or both school administrator or appropriate interest group.

Regardless of which strategies are used, there are two important guides to consider in conceptualizing intervention.

Guideline Seven. Use a variety of intervention techniques to change an interaction.

Guideline Eight. Repeat the change efforts. Using the example concerning epilepsy enables a consideration of these guidelines. Here, before teacher was ready to discuss epilepsy with her class, the teacher needed information about epilepsy, she needed to discuss the information, and she needed to role play, explaining epilepsy to pupils. Moreover, she needed to hear, discuss, and role play over and over again, before she was ready to act.

Change is complex and slow. Multiple and repeated change efforts are necessary to alter what may be a pattern of behavior that developed over a long period of time. Recognition of this should arm the consultant with patience and fortitude.

EVALUATION

Guideline Nine. Build evaluation into treatment. The results of the evaluation should help the consultant to make decisions about future interventions. Unfortunately, few consultation efforts have been evaluated, as a consideration of Mannino and Shore

(1970), Mannino (1974), Westler's (1974) bibliographies, and Alpert's (1976) reviews indicate. Lack of funds for such research activity as well as difficulties inherent in evaluation of consultation (for example, shifting goals, sampling problems, changes in environment, Hawthorne effect) account for the sparsity of research in this area. However, despite the problems, consultants should attempt to evaluate the effects of their interventions and to use these results as a basis for thinking about future interventions.

There are numerous evaluation methods. For example, Caplan (1970) describes the Critical Incidents Technique and process reports. Also Webb, Campbell, Schwartz, and Sechrest (1969) consider unobtrusive measures which may help the consultant to evaluate the effects of interventions. Other evaluation methods include, for example, observation systems, ratings, attitude scales, and measures of productivity. These techniques are not considered here. Rather, the purpose of this section is to provide a way of conceptualizing evaluation of consultation.

There are two major questions which should direct the consultant's efforts to judge effectiveness: (1) What will be evaluated? (2) How will it be evaluated? Both of these questions are complicated, as indicated by a reconsideration of Example B. This example concerned the principal's lack of funds, delay in payment of teachers' salaries, and the principal's and teachers' obvious concern but lack of communication about the crisis. In this example, if the consultative goal is to increase communication about the financial crisis, several questions emerge. Do you evaluate change in principal's attitudes or behavior? Do you evaluate whether the change in attitude or behavior resulted in other changes, such as in the way teachers and pupils related? Do you evaluate the effects of the intervention immediately after the intervention or do you consider long-range effects? Also, does the consultant or the consultee (direct recipient of services) evaluate?

Related to the "what" question is the "how" question. Which consultant behaviors were more and less helpful toward goal attainment? Essentially the "how" question is a process question. What becomes increasingly clear is that clear goals must be stated and means for evaluating the "what" and "how" questions must be carefully considered prior to intervention.

Following is an example of how a teacher's group was evaluated.

Example F. Teachers differ with respect to strengths and weaknesses. However, teachers seldom use each other as resources. In order to increase communication among teachers regarding school-related issues, a teacher group was established. Clearly, the goal was satisfied, and communication was increased. Stated simply, the existence of the group resulted in teachers' spending one hour a week together discussing school-related issues.

In addition to evaluating whether the consultant's goal was effected, each teacher was encouraged to set his own goal as well as to evaluate its effects. Each teacher, then, selected an issue he worked on during the group sessions. Two teachers, for example, set as their goal to be more in control of their class. They worked with the group to devise means to assess goal attainment. Essentially they tape recorded classroom sessions and compared classroom noise levels before and after the group experience. Another teacher's goal was to increase her classroom creative behaviors. She and the group decided that she would keep a list of creative behaviors and compare the number of weekly creative behaviors before and after the group experience. Although, of course, there are major problems with these evaluation methods, an attempt was made to evaluate and to establish a spirit of inquiry in the school.

Again, related to the "what" question is the "how" question. Not only must

effects of goals be considered, but also the process to reach goal attainment must be evaluated and re-evaluated. Throughout the group sessions there were discussions about consultant and teacher behaviors which helped and hindered goal attainment. This feedback served as the basis for renegotiation of activities.

In summary, the major point is that systematic, hardnosed research by the practitioner may not always be feasible. However, there should be a consideration of whether the goal of the consultant's intervention was attained and which consultative factors facilitated and impeded goal attainment. The purpose of evaluation is to help the consultant make evaluations about future interventions and to establish a frequently missing ingredient in the school setting, a spirit of inquiry. Ordinary systematic feedback should be valued and working informal contracts should be continuously renegotiated based on results from the impressionistic as well as more formal evaluations.

CONCLUSION

Some guidelines, as well as main concepts and components, are presented in the present paper in order to assist the school psychologist in maximizing the effects of consultative efforts. The guidelines concern target of change, assessment, intervention, and evaluation, and were derived from research and theory from planned change in social systems. Certainly there are other bodies of research and theory from which guidelines for school consultants could be derived. Hopefully, the reading of this paper will facilitate the development of other guidelines.

REFERENCES

Alpert, J. L. Teacher behavior across ability groups: A consideration of the mediation of Pygmalion effects. *Journal of Educational Psychology*, 1974, *66*, 348–353.

Alpert, J. L. Consultation in schools and the school psychologist. *International encyclopedia of neurology, psychiatry, psychoanalysis, and psychology*. New York: Van Nostrand, 1976.

Alpert, J. L. Mental health consultation. *Professional Psychology*, 1976, *7*, 619–625.

Benne, K. D., & Birnbaum, M. Principles of changing. In W. G. Bennis, K. D. Benne, & R. Chin (Eds.), *The planning of change*. New York: Holt, Rinehart & Winston, 1969. Pp. 328–334.

Caplan, G. *The theory and practice of mental health consultation*. New York: Basic Books, 1970.

Chin, R., & Benne, K. D. General strategies for effecting changes in human systems In W. G. Bennis, K. D. Benne, & R. Chin (Eds.), *The planning of change*. New York: Holt, Rinehart & Winston, 1969. Pp. 32–59.

Cowen, E. L. Social and community interventions. In P. Mussen & M. R. Rosenzweig (Eds.), *Annual Review of Psychology*, 1973, *24*, 423–473.

Dentson, M., & Krauss, R. M. *Theories in social psychology*. New York: Basic Books, 1965. Pp. 173–211.

Festinger, L. *A theory of cognitive dissonance*. California: Stanford University Press, 1962.

Festinger, L. *Conflict decision and dissonance*. California: Stanford University Press, 1964.

Hornstein, H. A., Bunker, B. B., Burke, W. W., Gindes, M., & Lewicki, R. J. *Social intervention: A behavioral science approach*. New York: Free Press, 1971.

Knoblock, P., & Goldstein, A. P. *The lonely teacher*. Boston: Allyn & Bacon, 1971.

Lewin, K. *Field theory in social science*. New York: Harper & Row, 1951.

Lewin, K., Lippitt, R., & White, R. Patterns of aggressive behavior in experimentally created "social climates." *Journal of Social Psychology*, 1939, *10*, 271–299.

Mannino, F. V. Consultation in mental health and related fields: A reference guide (DHEW publication No. 74-651). Maryland: National Institute of Mental Health, 1973.

Mannino, F. V., & Shore, M. F. *Consultation research in mental health and related fields: A critical review of the literature* (Public Health Monograph Number 79, Public Health Science

Publication No. 2122). Washington: U. S. Department of Health, Education, and Welfare, 1970.

Owens, R. G. *Organizational behavior in schools*. New Jersey: Prentice-Hall, 1970.

Sarason, S. B. *The culture of the school and the problem of change*. Boston: Allyn & Bacon, 1971.

Sarason, S. B., Levine, M., Goldenberg, I. I., Cherlin, D. L., & Bennett, E. M. *Psychology in community settings: Clinical educational, vocational, social aspects*. New York: John Wiley & Sons, 1966.

Schmuck, R. Some aspects of classroom social climate. *Psychology in the Schools*, 1966, *3*, 59–65.

Schmuck, R. A., Runkel, P. J., Saturen, S. L., Martell, R. T., & Derr, C. B. *Handbook of organization development in schools*. Oregon: National, 1972.

Schulman, E. D. *Intervention in human services*. St. Louis: C. V. Mosby Company, 1974.

Thelen, H. A. Educational dynamics: Theory and research. *Journal of Social Issues*, 1950, 6 (2), 2–95.

Webb, E. J., Campbell, D. T., Schwartz, R. D., & Sechrest, L. *Unobtrusive measures: Nonreactive research in the social sciences*. Chicago: Rand-McNally, 1969.

Westler, J. A. An annotated bibliography on mental health in the schools, 1970–1973 (Drew Publication No. 74-107). Maryland: National Institute of Mental Health, 1974.

Judith L. Alpert
Associate Professor of Educational Psychology
School of Education, Health, Nursing, and Arts Professions
New York University
926 Shimkin Hall
Washington Square
New York, New York 10003

Received: October 9, 1975
Revision Received: August 30, 1976

Chapter 13 Organizational Factors Influencing Consultation in Schools*

June Gallessich

A KEY VARIABLE in successful consultation is the consultant's skill in assessing the organization in which he is working or contemplating working. He needs accurate, immediate data to predict which services will produce what kinds of changes in that school or school district. But assessment of organizational factors cannot be separated from consultant variables. His values, motives, competencies, and vulnerabilities and their interaction with organizational factors are crucial to his predictions and decision making. In this chapter both organizational and consultant variables related to consultation processes are discussed. *The discussion assumes that the consultant is a change agent whose goal is to increase the coping skills of his clients and that he has some freedom to choose the extent to which he will be involved in any given school, as well as the nature of his involvement.*

Consultation is a loosely defined word conveying a variety of meanings. For one school psychologist "consultation" may be testing and diagnosing pupils. Another school psychologist may "consult" by leading faculty in-service workshops. Still others are "consulting" by directing ongoing programs in behavior management in the classroom, working with curricular experts to design learning activities, discussing with teachers the presence and prevention of mental health problems, planning research, or discussing personnel problems with the principal. Most school psychologists work in more than one consultation model at any given time within parameters defined by the perceived needs of the school staff and by the consultant's skills, interests and assumptions regarding his relationship to change processes in schools.

In any consultation model, study of organizational phenomena can lead to a deeper understanding of the perceptions, attitudes, problems, and behaviors of both individuals and groups within the school, an

This article is based on a paper presented at the workshop "Viewpoints on Consultation: Better Uses of Time and Talents," Division 16, American Psychological Association, Honolulu, September, 1972.

*From *Journal of School Psychology*, 1973, *11*, 57–65. Copyright 1973 by Human Sciences Press, New York, New York. Reprinted with permission.

understanding needed to consider changes of any kind. Furthermore, knowledge of the organization facilitates the consultation process: the consultant's increased sensitivity to staff stresses and anxieties can help him communicate more effectively and his feedback is more likely to be used. An organizational perspective also provides a Gestalt in which important general issues and relationships, not apparent from a situation-specific perspective, can be identified. Temporal patterns can be observed which are useful in predicting both immediate and long-range contingencies.

In some consultation models, the gathering of data for organizational assessment *precedes* consultation services. A consultant planning an intervention (such as a school community relations program, installation of a behavior modification program, or workshops for principals on leadership and decision-making processes) might interview various staff and faculty in order to get information that will help him plan more effectively. In other consultation models the study of organizational factors is *integral to the consultative process* (*Argyris, 1970; Caplan, 1970; Gallessich, 1972a*). Through interaction with clients, the consultant working in these models learns the realities of daily life in that particular school. From his questions, comments, and problem-solving approaches, the staff learns models, which it can use to pinpoint difficulties, gathers data, formulates hypotheses, makes changes, and evaluates results.

The organizational factors that the consultant probes can be separated into four domains: (1) external forces, (2) internal forces, (3) the school's trajectory, and (4) staff perceptions of the consultant's role.

EXTERNAL FORCES

Organizations beyond the immediate school environment are continuously exerting pressures upon any school. The consultant should identify these important external systems and study the transactions occurring across the boundaries. The most influential external system is the central administration: its values, climate, and decisions profoundly affect each school. A change in superintendent, for example, will be followed by a period of uneasiness and stress in most schools until the new superintendent's priorities and expectations are clarified. Program changes directed by the central administration and administrative reactions to crises are other examples of forces from this system that have important implications for the school.

The unique relationship of the individual school to the hierarchy is critical. The consultant will want to know if the school in which he is working is considered marginal, high status, maverick, deteriorating, or avant-garde. Is the school receiving special favors, being ignored, being readied for new programs, being phased out? How much autonomy, trust, and surveillance are given to this school? The formal and informal

communication channels should be identified. Usually the status of the principal is a key variable. Do his superiors regard him as competent, below par, destined for promotion? Relationships with other schools in the district are also important. For example, incongruity between the educational goals and activities of elementary feeder schools and related junior high schools can be a persistent source of frustration.

Other sources of environmental pressures are the local school board, parent groups, community action groups, neighborhood problem areas, state educational agencies, state and federal laws and programs, accrediting changes, teacher unions, and adjacent universities, especially teacher training institutions.

Consultant Implications

The consultant's awareness of external forces provides data for him to use in deciding whether or not to be involved in a school at a particular moment and what services are needed. If he does agree to work with a school, he can then help the staff recognize and cope with outside pressures. Results might include plans for (1) strengthening the principal's leadership and status, (2) clarifying the latitude allowed by central administration to this school, or (3) building community school relations. On the other hand, the consultant and staff might decide that his services are inappropriate at this time and that other services might be more useful. The staff responsible for contractual arrangements should participate in data assessment and in any decisions regarding direction and mode of consultative involvement.

Failure to recognize external pressures and to discuss these pressures realistically with staff can result in ineffectual consultation. For example, a consultant who fails to recognize and help a principal deal with stress related to pressures from community or central administration may be defaulting his most important contribution to the functioning of the entire school. A contract for mental health consultation might be a questionable strategy in a school in which pupils' minimal food, clothing, and medical needs are not being met. Lack of organizational sensitivity *can* be disastrous: the consultant who installs a behavior modification program in cooperation with an eager teacher commits a grave error if a powerful supervisor is opposed to this program.

INTERNAL FORCES

More visible than the external forces, but not necessarily easier to clarify, are the internal organizational forces. To understand these factors the consultant gets acquainted with the people on the staff, their formal structure, their roles, and their informal organizational norms.

Structure

What is the formal structure for providing educational and support services? What are the arrangements for leadership, for division of responsibilities? Are the various roles clear? How about relationships and communication across internal boundaries such as grade levels? Are mechanics provided for gathering ideas and using resources to solve problems and evaluate results? How often does the faculty meet and what is discussed? What subjects are avoided in faculty discussions? What are the decision-making patterns? What constitutes a crisis? How are crises dealt with?

People

The structure of a school is often shaped to a large extent by the people working within that school. The principal is usually the most influential person. His educational orientation, administrative style, decision-making patterns, and relationships with central administration, faculty, and community affect all aspects of the school. His most serious problem may be lack of training and experience in organizational and leadership skills. An important question to be asked is, "What behavior does this principal reward?" He may, for example, verbally encourage risk taking and innovation by teachers, but behaviorally he may subtly punish these activities.

The secretary may also play a powerful role. Sometimes she has a longer tenure than the principal and has vital information concerning the school's life. Often she maintains relationships with strategic persons in the central administration and in the community. She may be the school's "gatekeeper" and at times unilaterally control both inward and outward movement of information and people.

Assessment of faculty and other staff is more complicated. But it is possible to identify informal leaders, educational biases, special strengths, problem areas, and coping patterns. The professionalism of the faculty and its level of commitment to the school can be inferred from its behavior. In most schools, subgroups based on historical rifts and alliances affect faculty attitudes and behavior: dimensions for subgrouping may be loyalty to the principal, age, grade level, or educational biases (Gallessich, Iscoe, and Payne, 1971).

The pupil population should be considered. The consultant needs to know its socioeconomic stratas, its special strengths and problems, its attitudes toward education and toward this school. Is the school regarded as a community center or a prison? Are the faculty viewed as helpers or wardens? Are the children pressured by parents to achieve? Are there ethnic or other conflicts?

Norms

Much school behavior is controlled by norms of which there is little explicit awareness. Lower-class pupils may be regarded (by themselves, their parents, and their teachers) as educationally hopeless and not worth a real effort. Faculty members may seldom discuss with each other in any depth their problems in teaching and their assumptions regarding educational processes (Lortie, 1964; Sarason, Levine, Goldenberg, Cherlin, and Bennett, 1960; Sarason, 1971). Communication between pupils and faculty may be restricted within narrow limits. In some schools contact with the principal is carefully avoided except for formal interviews and conferences. These norms, shaped by past events, may be dysfunctional but are seldom challenged.

Consultant Implications

Lack of understanding of the school's culture is a common cause of failure in change efforts (Sarason, 1971). Consultants, often unrealistically hopeful about their own recommendations, may have fatally optimistic expectancy that the programs prescribed will take root and survive. They fail to engage the knowledge, motivation, creativity, and energies of the faculty in change processes. As a result, changes are slowly cannibalized by the system.

A common consultant error is failure to recognize the strength of the system's inertia. The consultant may minimize the influence of powerful individuals or groups. He may, for example, ignore the secretary, thereby cutting off an important channel of communication and facilitation. He may work with a faculty committee to create a new educational plan but forget to obtain the principal's input and support, thereby increasing the probability of failure. The consultant may make the mistake of partisan involvement: his alignment with one group may create a balancing coalition of opposing faculty. Emotional involvement in any sensitive substantive issue (for example, pupil control standards or attitude toward the principal's leadership) is risky (Gallessich, 1972b); involvement in *problem-solving processes* is usually safer and more productive in the long run.

Careful assessment of internal forces can help the consultant identify pre-eminent needs. He may decide his greatest service would be to strengthen faculty relations or decision-making processes. He may decide that a behavior management program offers the most hope for strategic leverage, or he may want to focus on internal obstacles to change, such as negative normative attitudes toward certain children or toward new teaching methodologies.

THE SCHOOL'S TRAJECTORY

Still another way to understand a school is to look at its movement over time. What is its history? Where has it been? What major trajectory does it seem to be following? The consultant needs to get some reading of trends on dimensions such as status in the district, faculty morale and attrition, educational orientation, and community real estate values. He also needs to have some idea as to the internal forces and the external forces *which might alter* the trajectory.

Consultant Implications

Lewin (1943, 1947) provides a conceptual schema that is useful to school consultants in analyzing and predicting that organizational change. Lewin views institutional behavior as determined by a dynamic balance of restraining and driving forces, a concept applicable to controversial educational issues, community school relations, and to innovative programs. According to Lewin the direction of change can be controlled by manipulation of restraining and driving forces in a process involving unfreezing, changing, and refreezing in a new balance. Jenkins (1961) discusses the modification of the force field in educational organizations.

STAFF PERCEPTIONS OF CONSULTANT ROLE

The consultant will want to know who was responsible for his entry into the school. Is the service a part of a total system program or was this school singled out? Often the request for consultation comes from a high-ranking administrator, regardless of school wishes. If the consultant is initiating the services, who supports his request and who opposes it?

Staff perceptions of the consultant's role and service are often unclear or covert. Common perceptions of the consultant role include:

1. Something is wrong and the consultant will help find the problem so that changes can be made. This could be a realistic expectancy or the consultant might be expected to work a miracle, such as immediate reduction of racial conflict.
2. The staff may be aware that there are crises but rather than wanting to change the system may expect the consultant simply to "put out the fires" without involvement in the precipitating circumstances. Often he is expected to get educationally or emotionally disadvantaged children out of the school.
3. An administrator may see some disaster coming and want to use the consultant to share the blame.
4. Staff may hope that the consultant will confirm that the situation (a staff conflict or a slow learner) is actually hopeless—nothing can be expected, therefore, from the faculty.
5. The consultant may be viewed as a status symbol who will

enhance the organization's image in the eyes of some important individual or group.

6. The consultant may be engaged in order to comply with the order of some influential person. In this case the consultant will probably be exposed to a biased "show and tell" in which strengths will be presented and problems hidden.

7. An administrator may want to fire an individual (the principal, the secretary, or a teacher) and want the consultant to sanction the dismissal. Or the task might be a more benign one. He could be expected to help an individual who is viewed as failing and for whom the usual resources have failed.

8. The consultant may be requested by the principal or some other administrator to facilitate acceptance of a new program. The role may be "motivate them to accept this prescribed program."

Consultant Implications

The consultant should help clients clarify their perceptions and expectancies of consultation services. He should also be aware of his own notions regarding his role and of any agendas that he may be likely to push. He may discover that his a priori prescriptions are unrealistic or irrelevant in this school setting. He has the responsibility for developing with the clients appropriate consultation goals and for negotiating a clear, realistic contract with arrangements for periodic examination of all contractual aspects, including renewal contingencies (Gallessich, 1972b).

There is generally considerable unevenness within the staff regarding consultation. The consultant might well spend some time building relationships with the entire staff, with special attention to reluctant members, considering a large number of alternative consultative services before making any contractual decisions. *Consultant willingness to provide the traditional psychological services which are familiar to the staff often has a positive effect on faculty attitudes and paves the way for later renegotiation of consultation services.*

CONSULTANT VARIABLES

The consultant should be aware of his own values, especially those which might be antithetical to school goals and norms (Glidewell, 1959). He should understand his motives for involvement, his professional and personal competencies and vulnerabilities. He needs to maintain a multiple perspective: (1) an objective outside view of the school, (2) an empathic understanding of life in the school, and (3) a clear view of himself in the interactive process. He should take major responsibility for clarifying contractual arrangements, including objectives, accessibility to staff, definition of services, fees, and confidentiality.

CHANGE STRATEGIES

The consultant deciding to contract with a school should make explicit decisions as to the most useful intervention. Strategies may be derived from a number of models. Circumstances often force us to use a *crisis model*, preferred by some practitioners who belive that the maximal available energy for change is found at stress points (Caplan, 1970). A *systems model* can be useful in studying organizational processes (Churchman, 1968; Gallessich, 1972a). A consultant may choose to work only with *individuals of unusual influence* (for example, the principal, curriculum director, team leader, or faculty bellwether). Other models that might be considered include Argyris's (1970) *congruency model*, in which the consultant identifies and works with discrepancies (such as role perceptions or operational processes versus attainment of adopted goals), or Lewinian *force field analysis* (1943, 1947), in which restraining and driving forces are identified and manipulated. A *preventive model* in which the major investment is with the healthiest people and structures offers still other alternatives.

The organizational phenomena and contingencies discussed in this chapter are not new but are frequently overlooked when we actually work in a school setting. A framework has been presented that can be used as a guide to gather and organize data to help us determine priorities, assess strengths and weaknesses, generate problem-solving strategies, and predict consequences. Implicit in the discussion are the difficulties experienced by the schools in adapting to today's changing needs.

CHALLENGES TO SCHOOL PSYCHOLOGY

Now I would like to change the focus and shift from the school's problems to our own. We school psychologists are also caught in a complex and rapidly changing force field. Pressures come from systemic crises in the schools, public demands for accountability, and from our own uneasiness about our roles and professional identity. How can we gain the objectivity for a clear and temporal view of our own dilemma? How can *we* change? I have some suggestions for perspectives that might be useful.

First of all, I think we need to examine very carefully our present goals (in whatever method we are using) and the assumptions underlying these goals. We may, for example, assume that our best strategy is to work with individual pupils or classrooms. We may assume that we are unable to offer any help except with pupils or that it is impossible to change a leadership vacuum or maladaptive faculty processes in a given school. Also, we may assume that we cannot deviate from a narrowly circumscribed role because "the school will not let us." Facing the organizational factors discussed in this chapter may reinforce these

beliefs. But assumptions regarding goals and of our helplessness may not always be valid and may serve to prevent our moving into broader, riskier arenas. Our themes are analogous to those of teachers with whom we work: "Working with parents is not my job"; "I can't do *anything* with that child"; "The principal (or supervisor, or parents, or team leader) will not let us change our methods."

After questioning the validity and scope of present goals, I suggest that we look for alternatives to consider. We can do this by exploring the accumulated psychological knowledge that is available, but not often applied, to organizational problem solving in schools. We can find exciting possibilities in the literature on change processes, learning theory, systems analysis, management, and force field theory.* We can learn a great deal from talking with those colleagues with whom we differ theoretically and methodologically. We may profit from time spent acquiring new skills or in consultation with colleagues who use different approaches, so that we will know where to find resources for services that we are unable to provide. But genuine openness to new ideas requires that we reconsider our comfortable reliance upon familiar strategies.

As we contemplate new directions, the issue of authority becomes significant. If we wish to function effectively at the organizational level, we step out of the comfortable but narrow arena in which we carry a mantle of undisputed authority (testing, mental illness, research methodology). Moving into the area of organizational processes, we might well give up the expert role and become just one more member of a team to which we, along with staff members, bring whatever resources we can to work toward shared and emergent diagnoses and solutions.

While moving out of a realm of traditional authority, I suggest that we recognize that *we own a lot of strategic power that we do not use.* Entry into an organization as any kind of consultant carries implicit power. The very ambiguity of the consultant role gives us some latitude which we can use to redefine our functions. We know quite a lot about how to elicit motivation and reduce resistance—knowledge we rarely apply to the organizational level. We have untapped power in the accumulated research in behavioral sciences that can provide both tools and predictive power.

We have far more potential than we use. I think we should take more responsibility for using this potential. The question is whether or not we can get the *systems perspective* needed to see where we are and where we need to be, and then use our resources creatively to work with the organic needs of our schools. We are in a situation paralleling that of teachers who are caught up in crises for which they have no explicit training. Probably no consultant will help us solve our dilemma, *but* a

*Examples of innovative, organic interventions in schools are reported by COPED (1970); Schmuck & Miles (1971); Glasser (1968); and Singer, Whiton, & Fried (1970).

wide array of alternatives is possible if we will only discover and use our resources.

REFERENCES

Argyris, C. *Intervention theory and method.* Reading, Mass.: Addison-Wesley Publishing Company, 1970.

Caplan, G. *The theory and practice of mental health consultation.* New York: Basic Books, 1970.

Churchman, C. W. *The systems approach.* New York: Dell, 1968.

COPED. *Cooperative project in education development, final report. Vols. I, II, and III.* Office of Education Project No. 8-0069. Washington, D.C.: U.S. Office of Education, 1970.

Gallessich, J. A systems model of mental health consultation. *Psychology in the Schools,* 1972, *IX* (1), 13-15. (a)

Gallesich, J. Contractual issues in a systems model of mental health consultation. Mimeo, 1972. (b)

Gallesich, J., Iscoe, I., & Payne, S. Team teaching: A study of team development and interpersonal functioning. *National Elementary Principal,* 1971, *LI* (2), 41-47.

Glidewell, J. C. The entry problem in consultation. *Journal of Social Issues,* 1959, *15,* 1-4.

Glasser, W. *Schools without Failure.* New York: Harper and Row, 1968.

Jenkins, D. Force field analysis applied to a school situation. In W. G. Bennis, K. D. Benne, and R. Chin, (Eds.), *The planning of change.* New York: Holt, Rinehart and Winston, 1961, pp. 238-244.

Lewin, K. Forces behind food habits and methods of change. *Bulletin of National Research Council,* 1943, *108,* 33-65.

Lewin, K. Group decision and social change. In T. Newcomb and E. Hartley (Eds.), *Readings in social psychology.* New York: Holt, Rinehart and Winston, 1947, pp. 330-344.

Lortie, D. C. The teacher and team teaching: Suggestions for long-range research. In J. T. Shaplin and H. F. Olds, Jr. (Eds.), *Team teaching.* New York: Harper and Row, 1964, pp. 270-305.

Sarason, S. B., Levine, M., Goldenberg, D. C., Cherlin, D. L., & Bennett, E. M. *Psychology in community settings: Clinical, educational, vocational, social aspects.* New York: John Wiley and Sons, 1960.

Sarason, S. B. *The culture of the school and the problem of change.* Boston: Allyn and Bacon, 1971.

Schmuck, R., & Miles, M. *Organization development in schools.* Palo Alto: National Press Books, 1971.

Singer, D., Whiton, M., & Fried, M. An alternative to traditional mental health services and consultation in schools: A social systems and group process approach. *Journal of School Psychology,* 1970, *8,* 172-179.

The Consultee in Consultation: Preparation and Training[1]

Jack I. Bardon

School of Education

The University of North Carolina at Greensboro

In the past, too often, the literature of psychological consultation process and training and the outcomes of consultation service-delivery have reflected a one-sided view of what consultation is all about (Mannino, MacLenna, & Shore, 1975). Especially vulnerable to this accusation have been those kinds of consultation most commonly called client-centered and consultee-centered case consultation. Typically, we prepare a psychological specialist to offer consultation services to other people who may or may not know what the services are supposed to accomplish or how to work with a consultant. School psychology is a prime example of a psychological specialty offering consultation services to clients who often have an erroneous conception of what the psychologist is supposed to do, no conception at all, or distorted expectations about what the outcomes of consultation services might be.

In psychotherapeutic practice and research, it is expected that the effects of psychotherapy will be considered in relation to the attributes of the persons presenting their problems and their degree of motivation for participation. In consultation, especially school-based consultation, we appear to have been so concerned with those who will be helped by our consultees - our consultee's pupils - that we may have ignored the very factors which can lead to successful consultation

---

[1]Presented as part of a Symposium on Training and Research in Consultation, American Psychological Association Convention, San Francisco, California, August 29, 1977.

practice and also to a clearer understanding of consultation outcomes. I am referring here to our need to know more about the attributes and expectations of our consultees (teachers) as well as their clients (pupils); the development in consultation training of sensitivity to the need for a firm understanding of what both parties in a consultation relationship are doing and expect to have happen; and, perhaps most important, a systematic attempt to prepare consultees for what the process involves and how they can best make use of it.

Many psychologists appear to show renewed interest these days in how our thoughts, values, and personal styles influence our actions (McKeachie, 1976). In areas as disparate as test construction and theory (Hunter & Schmidt, 1976), psychotherapy (Strupp & Hadley, 1977), and organizational psychology (Argyris, 1976) a common theme occurs which strongly suggests the importance of recognizing how people approach problems while engaging in professional activities. In school based consultation, we have tended to treat teachers as though they all come from the same gene pool and to deal with individual differences when they occur as "resistance" or as "entry" problems, both of which tend to minimize the critical importance of the differences among teachers and their preparation for participation in the consultation process (Friedman, 1976; Gallessich, 1974).

At least three consultee-related factors affect the consultation process in one-to-one consultation services in the schools: the immediate expectations of the consultee; professional orientation and knowledge about other professions which influence the meaning of receiving help from others; and the skills developed by the consultee to most effectively use the services of the consultant.

Ideally, preparation of teachers for involvement in school-based consultation should take place first in teacher preparation institutions. Teachers are not typically educated to use help. If anything, they are taught, implicitly or explicitly, that seeking assistance is a sign of professional weakness. Unlike

physicians, lawyers, and even professional psychologists, among others, who are expected to seek consultation when making critical decisions in ambiguous situations, teachers are taught to solve their own problems in their own classrooms, and are evaluated negatively if they do not. Teachers have come to expect supervision as part of teaching, but supervision in education implies that teachers are not fully professional. Teachers do not usually ask for supervision or see it as part of their continuing education.

A point of view is needed in teacher education which imbues teachers in training with the idea that being a professional requires seeking consultation from others. Teachers need to know that teaching and the individual problems of pupils are often too complex for any one teacher to have all the answers; that all the answers are not in books or in the opinions of "higher-level" professionals, such as psychologists. Instead, they should be led to understand that learning takes place in the process of finding out the best solutions and alternatives in the here-and-now, given the limits of what is possible in the situation, and that using another professional is probably the best way of sorting out the good from the poor alternatives to action. Teachers need badly to view consultation as a professional activity which is their right rather than as a judgment on their competency or lack of it.

Course work in receiving consultation is highly desirable in teacher education. Such courses might include information about the nature of helping relationships, what special services personnel and mental health professionals can and cannot do, how they are trained, and what in reality can be expected of them under different circumstances. Training would be given in question-asking and in how consultation process proceeds, with analysis of how consultants consult and how consultees react. We have a long history in professional psychology of receiving the wrong questions

and acting on them. We need teachers who can say "This is what I really want to know about. You are not addressing my questions. Let's see where we are so I can make best use of your services."

In this new curriculum offering, it will be important to help teachers know what they believe about teaching and learning, to help them to become knowledgeable consultees who can use consultation within a perspective of what is possible as well as what is ideal. Much of what is now considered to be consultation involves attempting to get at a problem presented by a teacher and failing to do so because neither consultant or consultee knows what issues are being addressed and what teacher-related factors are impinging on the consultation process and its possible outcomes. Given that teachers can learn how to receive consultation, the role of the consultant becomes that of a trained professional who is used by those who <u>want</u> help in problem solving.

In the absence of adequate teacher training in consultation, school-based consultation best begins with a clear and perhaps even prolonged discussion with a teacher of what the consultant can and cannot do, and with the questions the teacher wants to ask. In-service education aimed at helping teachers think about how they teach and what they believe teaching and learning are about is recommended as the best on-site method of preparing teachers to receive consultation. It is also suggested that consultation be offered only to these teachers who agree to use it with a full understanding of what are the responsibilities of both consultant and consultee.

Much of what is now considered to be consultation in the schools is really influence technique of a variety of kinds used with teachers who have not always agreed to be influenced (Meyers, Martin, & Hyman, 1977). A distinction needs to be made in consultation practice and research between those teachers who truly

seek professional consultation and those who want service for children but do not see themselves as part of the process.

Research on consultation process and the effectiveness of training will present ambiguous results at least until attention is directed to the intentions of the consultee, the preparation of the consultee for receiving consultation, and the distinction between consultation to teachers who request it and referrals of pupils for direct service by teachers who do not request it.

Finally, it is suggested that research on school-based client and consultee centered consultation concern itself with teacher satisfaction and changes rather than with the effects of consultation on the consultee's clients, the pupils. As viewed here, school-based consultation is a service to other adults who work with children. The changes which occur in these adults as a function of participation in consultation is complex and needs our immediate attention. We have tended to perceive the teacher as a means to get at the pupil. In doing so, we have negated the importance of our role in the professional development and activities of teachers. To measure successful outcomes of consultation with teachers by evaluating-pupil-progress is like measuring successful outcomes of supervision of trainees in professional psychology by how many of their clients or patients are cured. We know better in our own work but need to learn who our client is in teacher-based consultation.

REFERENCES

Argyris, C. Theories of action that inhibit individual learning. American Psychologist, 1976, 31, 638-654.

Friedman, L.P. Locus of control consultation styles: A theoretical model for increasing teacher-centered consultation effectiveness. Unpublished doctoral dissertation, The University of Pennsylvania, 1976.

Gallessich, J. Training the school psychologist for consultation. Journal of School Psychology, 1974, 12, 138-149.

Hunter, J.E. & Schmidt, F.L. Critical analysis of the statistical and ethical implications of various definitions of test bias. Psychological Bulletin, 1976, 83, 1053-1070.

Mannino, F.V., MacLennan, B.W., & Shore, M.F. The practice of mental health consultation. Adelphi, Maryland: National Institute of Mental Health, 1975.

McKeachie, W.J. Psychology in America's bicentennial year. American Psychologist, 1976, 31, 819-833.

Meyers, J., Martin, R., & Hyman, I. (Eds.) School consultation. Springfield, Illinois: Charles C Thomas Publisher, 1977.

Strupp, H.H. & Hadley, S.W. A tripartite model of mental health and therapeutic outcomes: With special reference to negative effects in psychotherapy. American Psychologist, 1977, 32, 187-196.

APPENDIX

Procedures for Assessing Accurate Reflection of Feelings

Your task as a rater is to consistently evaluate each consultant* response according to the criteria established here for the skill of ACCURATE REFLECTION OF FEELINGS.

ACCURATE REFLECTION OF FEELINGS is a verbal technique in which the consultant responds to the affective elements of the teacher's statements as a means of facilitating self-exploration. ACCURATE REFLECTION OF FEELINGS is one way of operationalizing the construct of EMPATHY. It is an observable mechanism by which the consultant can communicate that he/she is attempting to enter the affective perceptual world of the teacher. To gain a deeper familiarity with the operationalization of this skill, please read the following references related to the construct empathy (Carkhuff, 1969a & b; Gazda et al., 1973; Ivey, 1971; Ivey & Gluckstern, 1974).

After you have read these materials, the scoring procedure will be straightforward. Simply rate each helper response on a scale from 1-5 according to the following schema:

Level 1 -- No Reflection of Feeling (NOROF)
Level 2 -- Inaccurate Reflection of Content (IROC)
Level 3 -- Accurate Reflection of Content (AROC)
Level 4 -- Inaccurate or Inadequate Reflection of Feeling (IROF)
Level 5 -- Accurate Reflection of Feeling (AROF)

The developer of this instrument (Goldberg, 1970) offers this explanation of it:

> The Scale actually combines two graduated variables, accurate reflection of feelings and the accurate perception of content. The rationale behind this is that the consultant must first understand the meaning or content which the teacher is expressing before the consultant can fully perceive the feeling inherent in the meaning. However, once the content is understood the consultant may choose not to respond directly to it and to deal only with the feeling behind the content. He or she does this by accurately reflecting the feelings.

See the diagram of the rationale for this scale (Table 1).

To avoid rater confusion, a number of definitions for scoring common borderline responses are presented -

---

*Please note that this Appendix is written as if the consultant is the person in the consultant-teacher dyad who uses accurate reflection of feelings. However, it is equally important for the teacher to use accurate reflection of feelings and these materials should be used to train each party to use this skill.

1) Define as a SINGLE RESPONSE all comments made before the other person responds. For example, even if the helper makes a series of reflections before the helpee responds, score this as a single response.

2) When the consultant uses two or more levels in a series before the teacher responds, score the response according to the highest level used. For example, score as Level 5 a combined response which includes a Level 1 comment (like a diagnosis) as well as a Level 5 reflection. ("You don't seem to have accepted Pat's limitations....You feel really disappointed when it takes her so long to learn things.")

The specific scoring criteria appear in Table 2 which provides definitions and illustrations for each response level. Please become familiar with it and refer back to it when rating the transcripts. Use only whole numbers as ratings. (There is no such rating as a 3.5, for example, on this scale.)

DO NOT RATE MINIMAL ENCOURAGES TO TALK
DO NOT RATE QUESTIONS, except when in your judgment the inquiry contains a reflection of content or feeling. (For example, "Do you feel confused?" would probably merit a Level 4 or 5 rating.)

After you feel comfortable with these materials, please use the Practice Rating Form in Table 3 to rate the consultation tapes developed during role plays.

Table 1

Diagram of the Rationale of the
AROF Rating Scale

Rationale Behind the AROF Rating Scale (Adapted from Goldberg, 1970)

	HELPER'S REACTION TO CONTENT	HELPER'S REACTION TO FEELING
LEVEL 1 NO REFLECTION OF FEELING (NOROF)	No expressed perception of content.	No expressed perception of feeling.
LEVEL 2 INACCURATE REFLECTION OF CONTENT (IROF)	Expressed perception of content (but inaccurate).	No expressed perception of feeling.
LEVEL 3 ACCURATE REFLECTION OF CONTENT (AROC)	Expressed accurate perception of content.	No expressed perception of feeling.
LEVEL 4 INACCURATE OR INADEQUATE REFLECTION OF FEELING (IROF)	Accurate perception of content (assumed but not necessarily expressed).	Expressed perception of feeling (but inaccurate or inadequate).
LEVEL 5 ACCURATE REFLECTION OF FEELING (AROF)	Accurate perception of content (assumed but not necessarily expressed.	Expressed accurate perception of feeling.

TABLE 2

Scoring Criteria for the Accurate Reflections of Feelings Scale
(Adapted from Goldberg, 1970)

LEVEL 1
NO REFLECTION OF FEELING (NOROF)

1. Misses grammatical structure: Does NOT say "You feel..." "You think..." "It seems to you..." "I sense that..."
2. Uses one of these:
   1. Advising
   2. Approval
   3. Assurance
   4. Diagnosis
   5. Illustration
   6. Informing
   7. Moralizing
   8. Projection
   9. Rejection
   10. Suggestion
   11. Tentative Analysis
   12. Threat
   13. Urging
   14. Disclosures by helper which do not reflect back to helpee. ("I feel that way too." "I know what you mean.")

LEVEL 2
INACCURATE REFLECTION OF CONTENT (IROC)

1. Gets grammatical structure: DOES say "You think..." "You feel..." "In other words, you mean..." "Sounds like..."
2. Misses feeling.
3. Does NOT use feeling words like "angry," "jealous," "upset," if they're not in helpee's statement.
4. Just rephrases WHAT HE THINKS the helpee said, but is mistaken.
5. May say "You feel" but means "You think."
6. Tries to restate cognitive content of helpee's statement.
7. Tries to rephrase helpee's attitudes, opinions, and thoughts instead of feelings and emotions.

BUT

8. Is INCORRECT in rephrasing helpee's cognitive meaning.

LEVEL 3
ACCURATE REFLECTION OF CONTENT (AROC)

1. Gets grammatical structure: DOES say "You think..." "You feel..." "In other words you mean..." "Sounds like..."
2. Misses feeling.
3. Does NOT use feeling words like "angry," "jealous," "upset," if they're not in helpee's statement.
4. Just REPEATS or REPHRASES the helpee's words.
5. May say "You feel" but means "You think."
6. Restates cognitive content of helpee's statement.
7. Repeats or rephrases helpee's attitudes, opinions, and thoughts instead of feelings and emotions.

AND

8. Is CORRECT and ACCURATE in repeating or rephrasing helpee's cognitive meaning.

DO NOT RATE MINIMAL ENCOURAGES TO TALK ("mm-uh," "Tell me more," etc.)
DO NOT RATE QUESTIONS, except when in your judgment the inquiry contains a reflection of content or feeling (for example, "Do you feel confused?" would probably merit a Level 4 or 5 rating. But "How do you feel?" would not be rated).

TABLE 2 (continued)

LEVEL 4
INACCURATE OR
INADEQUATE REFLECTION
OF FEELING (IROF)

1. Gets grammatical structure:
   DOES say "You feel..."You think..."
   "Things seem to you..."
   "Do you feel confused?" is acceptable
   as a Level 4 (or 5) grammatical structure.
2. Tries to get feeling.
3. Uses feeling words like "angry," "confused," "jealous," EVEN IF they're not in helpee's statement.
4. Rephrase what he thinks the helpee is feeling.

BUT

5. If one of following:
   (1) Is INACCURATE in reflection of feeling. (Mistakes feeling.)
   OR
   (2) Is very TENTATIVE, or unsure in reflection.
   OR
   (3) SUBTRACTS A GREAT DEAL of feeling from helpee's statement.

LEVEL 5
ACCURATE REFLECTION
OF FEELING (AROF)

1. Gets grammatical structure:
   DOES say "You feel..." "You think..." "Things seem to you...."
   Said confidently, "You feel confused, don't you?" is an acceptable Level 5 (or 4) grammatical structure.
2. Gets feeling.
3. Uses feeling words like "angry," "confused," "jealous," EVEN IF they're not in helpee's statement.
4. Rephrase helpee's feelings.

AND

5. Is ACCURATE in reflecting helpee's feeling.
6. Reflecting is almost interchangeable with the helpee's statement. (Has some FEELING in voice.)
7. May reflect two or more feelings of helpee.

DO NOT RATE MINIMAL ENCOURAGES TO TALK ("mm-un," "Tell me more, " etc.)
DO NOT RATE QUESTIONS, except when, in your judgment, the inquiry contains a reflection of content or feeling (for example, "Do you feel confused?" would probably merit a Level 4 or 5 rating. But "How do you feel?" would not be rated).

TABLE 3

Practice Rating Form

Accurate Reflection of Feeling

As a means of developing inter-rater consistency, a practice tape is included.

Please listen to the tape and record your assessment of each consultant response (with ratings as Level 1-5) in the space provided. Since some responses on the tape will be minimal encourage or non-reflective questions, some numbers should remain blank. If you wish, refer back to the instruction and definitions as scoring difficulties arise.

Response #	Level 1 NOROF	Level 2 IROC	Level 3 AROC	Level 4 IAOF	Level 5 AROF
1.					
2.					
3.					
4.					
5.					
6.					
7.					
8.					
9.					
10.					
11.					
12.					
13.					
14.					
15.					
16.					
17.					
18.					
19.					
20.					
21.					
22.					
23.					
24.					
25.					
26.					
27.					
28.					
29.					
30.					