DOCUMENT RESUME

ED 242 551 SE 044 351

TITLE	Agricultural Mathematics for Peace Corps Volunteers. Appropriate Technologies for Development. Reprint R-4.
INSTITUTION	Peace Corps, Washington, DC. Information Collection and Exchange Div.
PUB DATE	Sep 81
CONTRACT	PC-73-1034
NOTE	111p.; Prepared by the Development and Research Corporation.
AVAILABLE FROM	Peace Corps, Information Collection & Exchange, Office of Programming and Training Coordination, 806 Connecticut Avenue, NW, Washington, DC 20525.
PUB TYPE	Guides - Classroom Use - Guides (For Teachers) (052)
EDRS PRICE	MF01/PC05 Plus Postage.
DESCRIPTORS	Adult Basic Education; *Agriculture; Geometric Concepts; Mathematics Curriculum; *Mathematics Education; *Mathematics Instruction; *Measurement; Physics; *Units of Study
IDENTIFIERS	*Peace Corps

ABSTRACT

This manual was prepared for use by Peace Corps Volunteers in solving field problems requiring mathematical calculations. It contains problem examples and data pertinent to the needs of volunteers, with many of the problems and exercises developed from on-the-job problems. Primary emphasis is given to providing answers and procedures for solving specific agricultural mathematics problems. Each of the six units may be used as a review or as new material. Unit A focuses on preliminary information and review on measuring tools, geometry, area and volume, and weights and measures. Unit B considers problems related to water and irrigation; unit C, problems related to construction; unit D, problems related to land leveling and crop production; unit E, problems related to agricultural machinery; and unit F, problems related to temperature and to calculating interest. A set of tables is also included. (MNS)

INFORMATION COLLECTION & EXCHANGE

Peace Corps' Information Collection & Exchange (ICE) was established so that the strategies and technologies developed by Peace Corps Volunteers, their co-workers, and their counterparts could be made available to the wide range of development organizations and individual workers who might find them useful. Training guides curricula, lesson plans, project reports, manuals and other Peace Corps-generated materials developed in the field are collected and reviewed. Some are reprinted "as is"; others provide a source of field based information for the production of manuals or for research in particular program areas. Materials that you submit to the Information Collection & Exchange thus become part of the Peace Corps' larger contribution to development.

Information about ICE publications and services is available through:

Peace Corps
Information Collection & Exchange
Office of Programming & Training Coordination
806 Connecticut Avenue, N.W.
Washington, D.C. 20525
(202) 254-7386

Add your experience to the ICE Resource Center. Send materials that you've prepared so that we can share them with others working in the development field. Your technical insights serve as the basis for the generation of ICE manuals, reprints and resource packets, and also ensure that ICE is providing the most updated, innovative problem-solving techniques and information available to you and your fellow development workers.

Peace Corps

AGRICULTURAL MATHEMATICS

FOR PEACE CORPS VOLUNTEERS

Prepared for The United States Peace Corps
by
Development and Resources Corporation
In accordance with Contract PC-73-1034
May 1, 1968

Peace Corps
Information Collection and Exchange
Reprint R-4
September, 1981

INTRODUCTION

This manual has been prepared for use by Peace Corps Volunteers in solving field problems requiring mathematical calculations. It is intended as a practical handbook containing problem examples and data pertinent to the needs of Volunteers as those needs have been observed by Development and Resources field staff. Subject areas have been limited to those observed as being of most frequent interest to Volunteers in their project activities in agricultural programmes.

Many of the problems and exercises are developed from on-the-job problems that Volunteers have experienced. Others have been included as a result of field observations made by Development and Resources staff.

This manual is designed to convey insights into various agricultural practices and techniques. Primary emphasis is given to providing answers and procedures for the solution of specific agricultural mathematic problems. Care has been taken to make the content and problems realistic and meaningful. It is hoped this text will help serve the Peace Corps Volunteer in the agricultural field by enabling him to more quickly identify and resolve specific problems encountered, and requiring the use of mathematics in resolution.

Each of the six units of this text is complete and substantially self-contained. Each unit may be used as a review or as new material. Problems and procedures for solution are structured to provide him with information on a specific topic, a representative problem and a detailed procedure for solution. Thus, he should be able to extrapolate beyond the topic of immediate concern to apply the principles and procedures to other problem areas encountered.

Development and Resources Corporation sincerely hopes that Peace Corps Volunteers will find this manual a useful working tool and helpful in their project activities.

CONTENTS

UNIT E. PROBLEMS RELATED TO AGRICULTURAL MACHINERY

UNIT F. PROBLEMS RELATED TO GENERAL AGRICULTURAL INFORMATION

LIST OF TABLES

I. MEASURING TOOLS AND METHODS

Practical agriculture requires the ability to measure with a degree of accuracy. This means using the right tool, determining the correct measurement and applying it to the solution of a problem. Thus, the following is a brief review of the most common measuring tools actually being used.

Measurements with a Common Rule

To take a measurement with a common rule, hold the rule with its edge on the surface of the object being measured. This will eliminate errors which might result due to the thickness of the rule. Except in tapes, this thickness causes the graduations to be a slight distance away from the surface of the object. Read the measurement at the graduation which coincides with the distance to be measured, and state it as being so many inches and fractions of an inch. (See FIGURE 1.) Always reduce fractions to their lowest terms, for example, 6/8 inch would be called 3/4 inch.

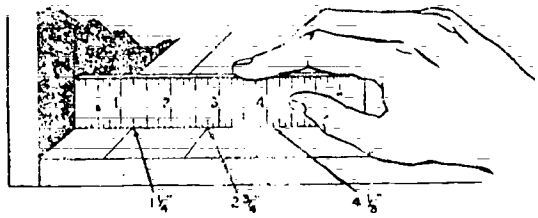

FIGURE 1

Measuring the Length of a Bolt or Screw

The length of bolts and screws are best measured by holding them up against a rigid rule or tape. Hold both the bolt or screw to be measured and the rule up to your eye level so that your line of sight will not be in error in reading the measurement. As shown in FIGURE 2, the bolts or screws with countersink type heads are measured from the top of the head to the opposite end, while those with other type heads are measured from the bottom of the head.

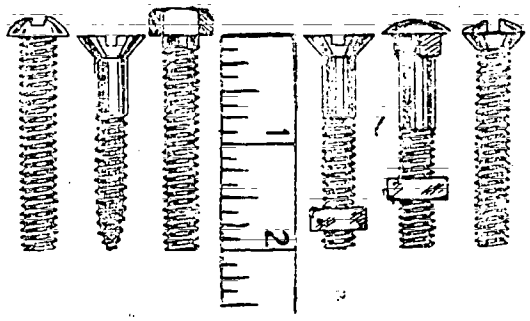

FIGURE 2

Measuring the Outside Diameter of a Pipe

To measure the outside diameter of a pipe, it is best to use some kind of rigid rule. A folding wooden rule or a steel rule is satisfactory for this purpose. As shown in FIGURE 3, line up the end of the rule with one side of the pipe, using your thumb as a stop. Then with the one end held in place with your thumb, swing the rule through an arc and take the maximum reading at the other side of the pipe. For most practical purposes, the measurement obtained by using this method is satisfactory. It is necessary that you know how to take this measurement as the outside diameter of pipe is the only dimension given on pipe specifications.

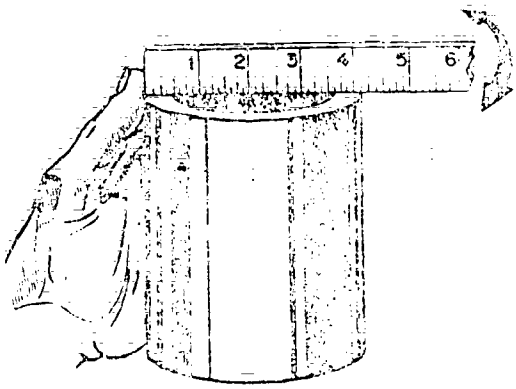

FIGURE 3

Measuring Inside Diameter of Pipe with a Rule

To measure the inside diameter of a pipe with a rule, as shown in FIGURE 4, hold the rule so that one corner of the rule just rests on the inside of one side of the pipe. Then, with one end thus held in place, swing the rule through an arc and read the diameter across the maximum inside distance. This method is satisfactory for an approximate inside measurement.

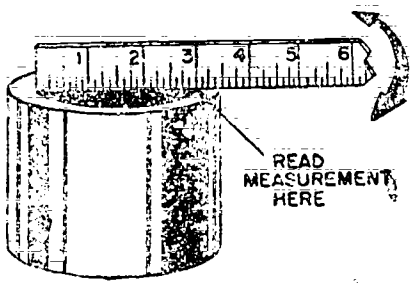

FIGURE 4

Measuring the Circumference of a Pipe

To measure the circumference of a pipe, a flexible type rule that will conform to the cylindrical shape of the pipe must be used. A web tape rule or a steel tape is adaptable for this job. When measuring pipe, make sure the tape has been wrapped squarely around the axis of the pipe (*i.e.*, measurement should be taken in a plane perpendicular to

the axis) to ensure that the reading will not be more than the actual circumference of the pipe. This is extremely important when measuring large diameter pipe.
Hold the rule or tape as shown in FIGURE 5. Take the reading, using the 2-inch graduation, for example, as the reference point. In this case the correct reading is found by subtracting 2 inches from the actual reading. In this way the first 2 inches of the tape, serving as a handle, will enable you to hold the tape securely.

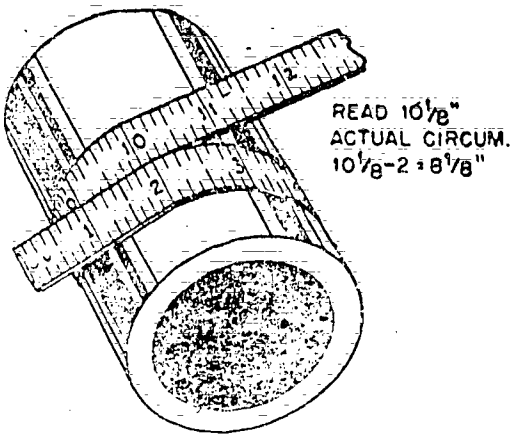

FIGURE 5

Measuring an Inside Dimension Using a Folding Rule

To take an inside measurement, such as the inside of a box, a folding rule that incorporates a 6 or 7 inch sliding extension is one of the best measuring tools for this job. To take the inside measurement, first unfold the folding rule to the approximate dimension. Then extend the end of the rule and read the length that it extends, adding the length of the extension to the length on the main body of the rule. (See FIGURE 6). In this illustration, the length of the main body of the rule is 13 inches and the extension is pulled out 3 3/16 inches. In this case, the total inside dimension being measured is 16 3/16 inches.

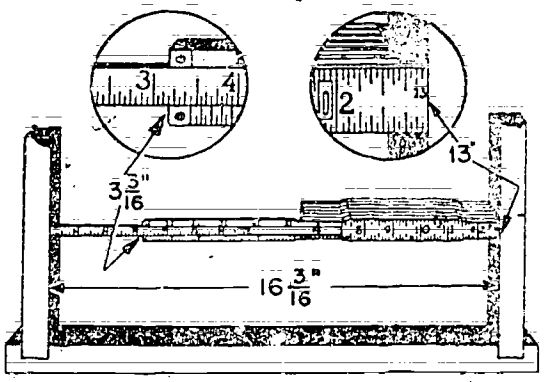

FIGURE 6

Measuring an Inside Dimension Using a Tape Rule

In FIGURE 7, notice in the circle that the hook at the end of the particular rule shown is attached so that it is free to move slightly. When the outside dimension is taken by hooking the end of the rule over an edge, the hook will locate the end of the rule even with the surface from which the measurement is being taken. By being free to move, the hook will retract away from the end of the rule when an inside dimension is taken. To measure an inside dimension using a tape rule, extend the rule between the surfaces as shown, take a reading at the point on the scale where the rule enters the case, and add 2 inches. The two inches are the width of the case. The total is the inside dimension being taken.

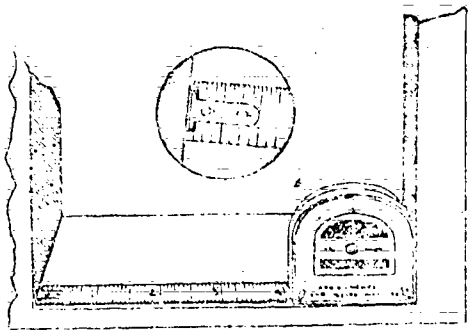

FIGURE 7

Measuring an Outside Dimension Using a Tape Rule

To measure an outside dimension using a tape rule, hook the rule over the edge of the stock. Pull the tape out until it projects far enough from the case to permit measuring the required distance. The hook at the end of the rule is designed so that it will locate the end of the rule at the surface from which the measurement is being taken. (See FIGURE 8). When taking a measurement of length, the tape is held parallel to the lengthwise edge. For measuring widths, the tape should be at right angles to the length-wise edge. Read the dimension of the rule exactly at the edge of the piece being measured. It may not always be possible to hook the end of the tape over the edge of stock being measured. In this case, it may be necessary to butt the end of the tape against another surface or to hold the rule at a starting point from which a measurement is to be taken.

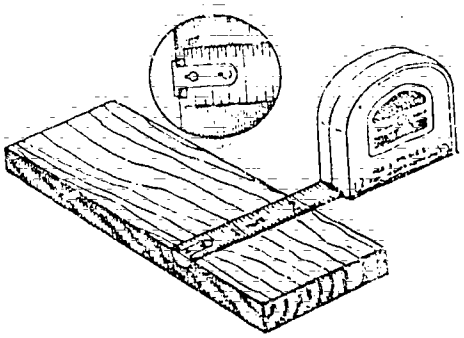

FIGURE 8

How to Use a Steel Tape or Web Tape

Steel or web tapes are generally used for making long measurements. Secure the hook end of the tape to the outside edge, or corner, or end of the object to be measured. Hold the tape reel in the hand and allow it to unwind while walking in the direction in which the measurement is to be taken. Stretch the tape with sufficient tension to overcome sagging. At the same time make sure the tape is parallel to an edge or the surface being measured. Read the graduation on the tape by noting which line on the tape coincides with the measurement being taken.

Measuring Depth with a Combination Square

When using a combination square for measuring the depth of a slot, rest the squaring head on the surface of the work. (See FIGURE 9). Loosen the blade friction screw and extend the blade to the bottom of the slot or shoulder, and retighten the screw to maintain the setting. Read the depth of the slot on the scale.

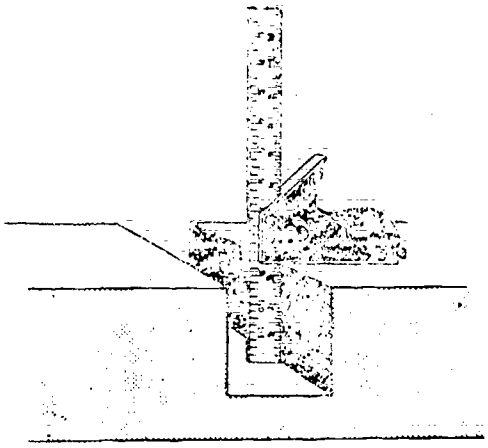

FIGURE 9

Measuring Iron Pipe to Length

Before you cut pipe, make certain the required correct length is determined. There are three methods of measuring threaded pipe, and you must understand these methods if the pipe is to be cut to the correct length. (See FIGURE 10).

The end-to-end method includes measuring the threaded portions of the pipe and measuring the pipe from end to end. The end-to-center method is used on a

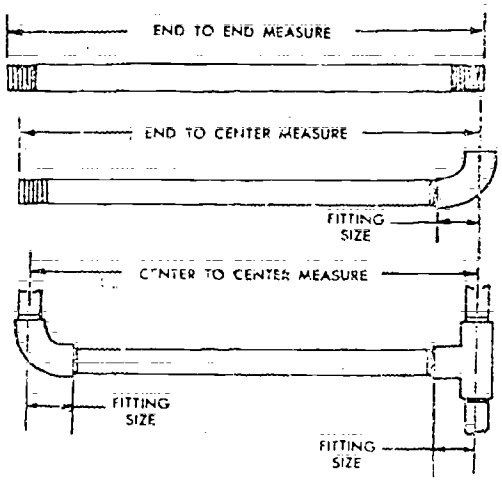

FIGURE 10

section of pipe that has a fitting screwed on one end only; measure from the free end of the pipe to the center of the fitting at the other end of the pipe. The center-to-center method is used when both ends of the pipe have fittings; measure from the center of one fitting to the center of the other fitting at the opposite end of the pipe.

The approximate length of thread on 1/2 and 3/4 inch wrought iron or steel pipe is 3/4 inch. On 1, 1 1/4, and 1 1/2 inch pipe, it is approximately 1 inch long. On 2 and 2 1/2 inch pipe, the length of thread is 1 1/8 and 1 1/2 inches respectively.

To determine the length of pipe required, take the measurement of installation such as center to center of the pipe requiring two fittings. Measure the size of the fittings. Subtract the total size of the two fittings from the installation measurement. Multiply the approximate thread length by 2 and add the result to the length obtained. This will give the length of pipe required.

After the length of the pipe has been determined, measure the pipe and mark the spot where the cut is to be made with a scriber or crayon. Lock the pipe securely in a pipe vise and cut to length.

2. FUNDAMENTAL IDEAS IN GEOMETRY

Many of the basic ideas in geometry are used by people every day. A farmer in dividing his farm into fields, in rowing his crops, and in planning an orchard uses geometry. The agriculture mechanic continually makes use of geometric principles. He knows that he cannot turn a five-sided nut with an ordinary wrench. He is familiar with the circle, the square, and various geometric forms as they enter into tools and land usage. When he does carpentry, he uses geometry constantly. Every use to which he puts his square depends upon geometry. We see geometric forms of utility and beauty on every side, in forms of nature, in buildings and bridges, in landscape gardening and in the field. In the study of geometry, we are concerned with these forms, in classifying and naming them, and in applying the facts of geometry in a definite and systematic manner to practical problems that arise in our work.

Angles

Two straight lines that meet at a point form an angle. See FIGURE 11. The idea of what an angle is, being a simple one, is hard to define. One should guard against thinking of the point where the two lines meet as the angle. This point is called the VERTEX of the angle.

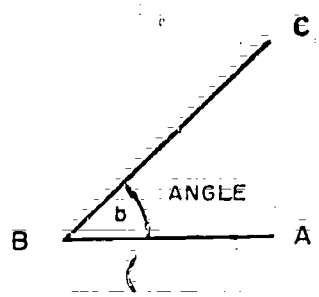

FIGURE 11

The two lines are called the SIDES of the angle. The difference in the direction of the two lines forming the angle is the magnitude, or size, of the angle. An angle is read by naming the letter at the vertex or by naming the letters at the vertex and at the ends of the sides. When read in the latter way, the letter at the vertex must always come between the two others.

Thus, the angle in FIGURE 11 is read "the angle b," "the angle ABC," or the "angle at B."
The symbol ∠ is used for the word angle. In this way, we write ∠ABC for angle ABC and ∠A for angle A.
If one straight line meets another so as to form equal angles, the angles are RIGHT ANGLES.
In FIGURE 12, the angles ADC and BDC are each right angles.
If a right angle is divided into 90 equal parts, each part is called a DEGREE. It is usually written 1°.

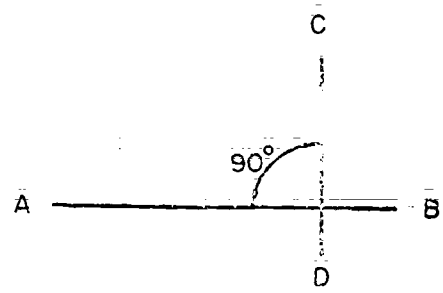

FIGURE 12

3. APPLIED GEOMETRIC FORMULAS FOR AREA AND VOLUME

The importance of a geometrical form in the study of practical mathematics is determined, to a great extent, by the frequency of its occurrence in application. In agricultural work, the circle is more frequently seen than other forms. Wires, tanks, pipes, silos, pillars, etc., involve the circle. There are also several other geometric shapes that are important. After careful analysis, the following shapes and formulas have been identified as useful to PCV's involved in agricultural work. In these formulas:

Area of a Rectangle

Find the area of a rectangle 6 feet X 3 feet.

A = L X W

A = 6 ft. X 3 ft. = 18 sq. ft.

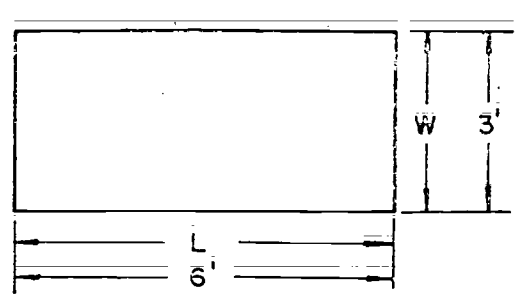

FIGURE 13

Area of a Parallelogram

Find the area of a parallelogram
$H = 2$ ft. and $L = 5$ ft.

$A = H \times W$

$A = 2 \text{ ft.} \times 5 \text{ ft.} = \underline{10 \text{ sq. ft.}}$

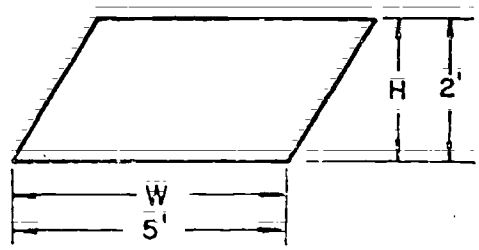

FIGURE 14

Area of a Circle

Find the area of a circle with a 3 ft. radius.

$A = \pi R^2$

$A = 3.1416 \times 3' \times 3' = 28.2744$ sq. ft.

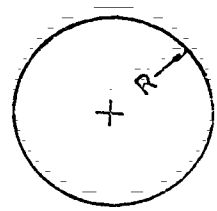

FIGURE 15

Surface of a Sphere

Find the square feet of surface area on a sphere 4 ft. in diameter.

$S = 4\pi R^2 = \pi D^2 = 12.57\ R^2$

$\frac{D}{2} = R \quad \frac{4}{2} = 2 = R$

$S = 12.57 \times 2 \text{ ft.} \times 2 \text{ ft.} = 50.28$ sq. ft.

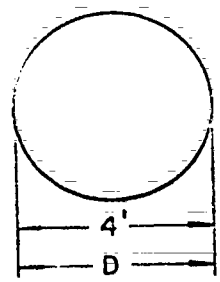

FIGURE 16

Volume of a Sphere

Find the volume in gallons of a spherical water container.
Inside diameter is 14 inches.

$$V = \frac{4}{3}\pi R^3 = \frac{1}{6}\pi D^3 = 4.189R^3$$

$$R = \frac{D}{2} = \frac{14}{2} = 7$$

$$V = 4.189 \times 7 \times 7 \times 7 = 1436.8 \text{ cu. ins.}$$

1 gallon = 231 cu. ins.

$$V \text{ Gallons in} = \frac{1436.8}{231} = \underline{6.22 \text{ gallons}}$$

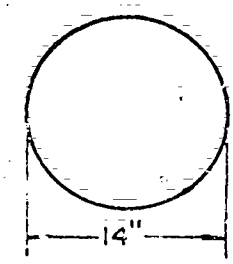

FIGURE 17

Curved Surface of a Right Cone

Find the curved surface of a right cone 8 ft. in diameter and 3 ft. high.

$$S = \pi R\sqrt{R^2 + H^2}$$

$$R = \frac{D}{2} = \frac{8'}{2} = 4'$$

$$S = \pi R\sqrt{R^2 + H^2}$$

$$S = 3.1416 \times 4' \times \sqrt{(4' \times 4') + (3' \times 3')}$$

$$S = 3.1416 \times 4' \times \sqrt{25} \text{ sq. ft.}$$

$$S = 3.1416 \times 4' \times 5' = \underline{62.832 \text{ sq. ft.}}$$

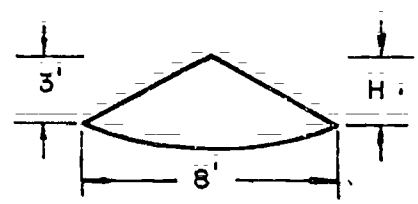

FIGURE 18

Curved Surface of Right Cylinder

Find the square feet of tin needed to make a pipe 4 inches in diameter and 3 feet long. Allow 2 inches for lap.

$$CSRC = 2\pi RH$$

$$4 \text{ in.} = \frac{4}{12} \text{ ft.} = \frac{1}{3} \text{ ft.} \quad R = \frac{D}{2} = \frac{1'}{3'} = \frac{1'}{6}$$

$$S = 2 \times 3.1416 \times \frac{1'}{6} \times 3' = 3.1416 \text{ sq. ft.}$$

$$\text{Lap} = 2'' \times 3 \text{ ft.} = \frac{1^2}{6} \times 3' = \frac{1^2}{2} A^2 = .5 \text{ ft.}$$

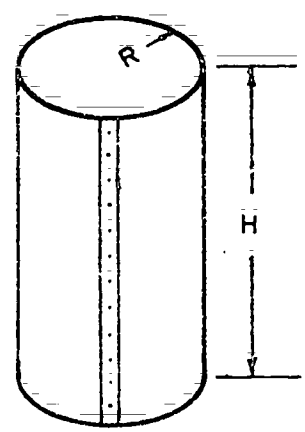

FIGURE 19

Curved Surface of Right Cylinder (cont.)

S + Lap = 3.1416 + .5 = 3.6415 ft.^{2} or

3 ft. X 1·21 ft., $\frac{3.6415}{3 \text{ ft.}}$ = 1·21 or

3 ft. X 1 ft. 2.52 ins., 21 ft. X 12″ = <u>2.52″</u>

Surface of a Closed Right Cylinder

Find the amount of square feet of surface of a can: 2 ft. high and 2 ft. in diameter.

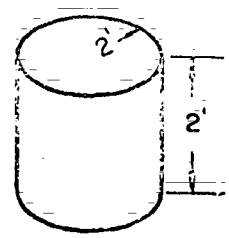

FIGURE 20

$SCRC = 2\pi RH + 2\pi R^2$

$R = \frac{D}{2} = \frac{2}{2} = 1$

$S = 2 \times 3.1416 \times 1' \times 2' + 2 \times \pi \times 1' \times 1'$

$S = 12.5664 \text{ ft.}^2 + 6.2832 \text{ ft.}^2$

$S = 18.1496 \text{ ft.}^2$

S = <u>18.8496 sq. ft.</u>

Volume of a Right Cylinder

Find the gallons (U.S.) in a tank 5 ft. in diameter and filled to a height of 10 feet.

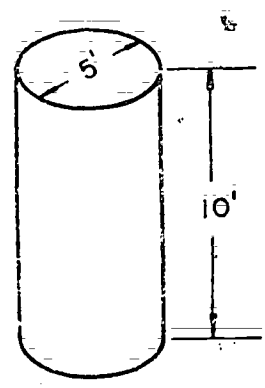

FIGURE 21

$V = \pi R^2 H$

$R = \frac{D}{2} = \frac{5'}{2}$

$V = \pi R^2 H$

$V = 3.1416 \times \frac{(5')^2}{4} \times 10'$

$V = 3.1416 \times 6.25 \text{ ft.}^2 \times 10 \text{ ft.} = 196.559 \text{ ft.}^3$

1 cubic foot = 7.481 gallons

$196.559 \text{ ft.}^3 \times 7.481 \frac{\text{gallons}}{\text{ft.}^3}$ = <u>1468.9 gallons</u>

Area of a Trapezoid

Find the area of a trapezoid

$$A = \frac{L_1 + L_2}{2} \times H$$

5 ft. across the bottom

7 ft. across the top.

2 ft. in height.

$$A = \frac{7' + 5'}{2} \times 2' = \underline{12 \text{ square feet}}$$

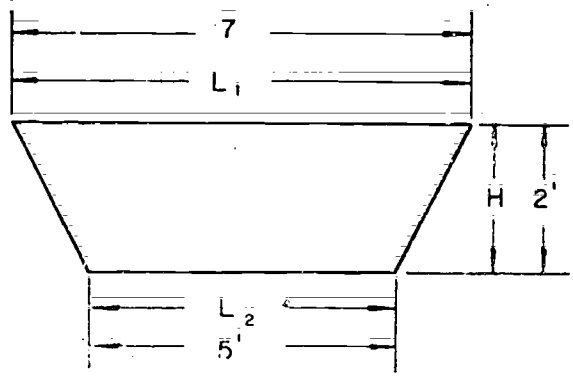

FIGURE 22

Area of a Triangle

Find the area of a triangle with a base of 4 ft. and height of 3 ft.

$$A = \frac{1}{2} B \times H$$

$$A = \frac{1}{2} \times 4' \times 3' = \frac{12}{2} = 6 \underline{\text{ sq. ft.}}$$

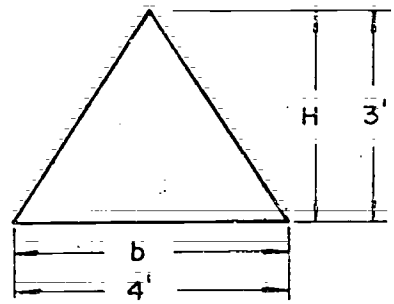

FIGURE 23

Volume of a Cube

Find the volume of a cube 3 ft. on each side.

$$V = L \times L \times L$$

$$V = 3' \times 3' \times 3' = \underline{27 \text{ ft.}^3}$$

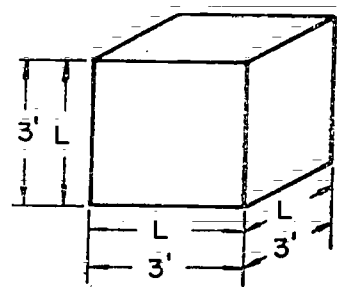

FIGURE 24

Volume of a Rectangular Prism

Find the volume of a rectangular prism with a width of 3 ft., height of 3 ft., and length of 6 ft.

$$V = 3' \times 3' \times 6' = \underline{54 \text{ ft.}^3}$$

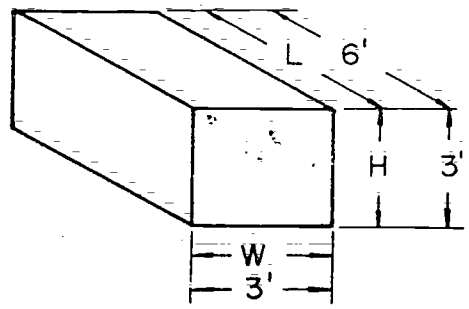

FIGURE 25

Circumference of a Circle

Find the circumference of a circle with a 3 ft. radius.

$C = \pi D$ or $2 \pi R$

$C = 2 \times 3.1416 \times 3' = \underline{8.8496 \text{ ft.}}$

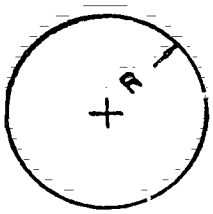

FIGURE 26

Volume of a Pyramid

Find the volume of a pyramid with a base of 5 ft. by 5 ft. and 6 ft. height or altitude.

$V = \frac{1}{3}$ area of base X altitude.

Area $= 5' \times 5' = 25 \text{ ft.}^2$

$V = \frac{5' \times 5'}{3} \times 6' = 50 \text{ ft.}^3$

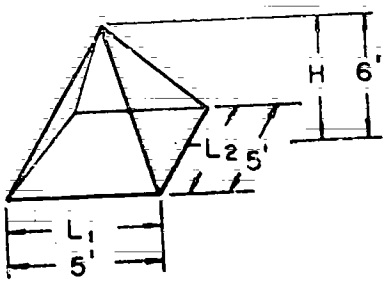

FIGURE 27

4. WEIGHTS AND MEASURES

Agricultural workers the world over use the weights and measures in common use. Those who use the common system are also familiar with the metric system. Often, it is necessary to change a measurement from the common system to an equivalent in the metric system or vice versa.

The metric is the fundamental standard of length for both the metric and common system.

1 Meter = 39.37 inches

The meter is the only legal relation between the metric and common system. It is used by the Office of Standards of Weights and Measures in the U. S. in deriving the inch, foot, yard, etc., from the meter. Determined in this way the customary units are legal. Thus, the common system is based on the metric system.

A comparison of an inch and a centimeter, which is one hundredth of a meter, is shown in FIGURE 29.

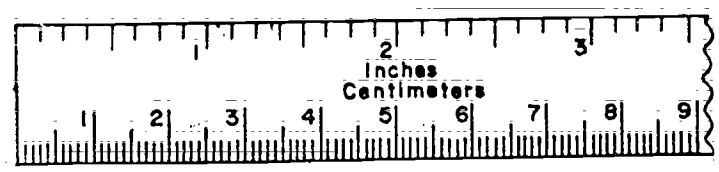

FIGURE 29

Measure of Surface

There is no fundamental standard of surfaces or areas as there is of the measures of length. But as the measures of areas are based upon the units of length, and as these are standards, the measures of areas may be so considered.

Measures of Volume, Cubic and Capacity Measures

The fundamental standards of volume are (1) the cubes of the linear units based on the International Meter; (2) the liter, which is the volume of the mass of one kilogram of pure water at its greatest density; (3) the

gallon, which is 231 cubic inches; (4) the bushel, which is 2150.42 cubic inches. The liter is almost exactly 1 cubic decimeter, and the inch is derived from the meter according to the relation 1 meter = 39.37 inches.

Measures of Mass

The fundamental standard of Mass (weight) in the United States and much of the world, is the International Kilogram, a cylinder of 90 per cent platinum and 10 per cent iridium, preserved at the International Bureau of Weights and Measures, near Paris.

By act of Congress of July 28, 1868, the pound is derived from the kilogram. The relation established at that time was 1 kilogram = 2.2046 pounds avoirdupois. This relation has since been made more nearly accurate and is 1 kilogram = 15,432.35639 grains, which would change the first relation to 1 kilogram = 2.20462234 pounds avoirdupois, or 1 pound avoirdupois = 453.5924277 grams. This value is the one used by the National Bureau of Standards in Washington. It is thus seen that the avoirdupois pounds, ounces, etc., in common use are derived from the kilogram, and so are fixed and definite derived units. The established relation between the troy pound and the avoirdupois pound is 1 troy pound $= \frac{5760}{7000}$ avoirdupois pound.

When made, the standard kilogram was supposed to be the exact mass of 1 cubic decimeter of 1 liter of pure water at the temperature of its greatest density. It has been found that this is not exactly true, but the difference is very slight, the kilogram being about 27 parts in 1,000,000 too heavy. This difference is so small that it could hardly affect any ordinary problem.

Terms Used

In the common system of weights and measures, there are about 150 different terms and 50 different numbers, ranging all the way from 2 to 1728, which bear no relation to one another. In the metric system, we have only 10 different terms and but a single base, and that is the number 10.

In the metric system, the fundamental unit is the METER, the unit of length. From this, the unit of capacity, the LITER; the unit of weight, the GRAM; and the unit of area in measuring land, the ARE: are derived. All other units are the decimal subdivisions or multiples of these. These four units are simply related. For all practical purposes 1 cubic decimeter equals 1 liter, 1 liter of water weights 1 kilogram, and 1 are is an area 10 meters on a side.

The metric tables are formed by combining the words meter, liter, gram, and are with the six numerical prefixes. These are given with their meanings and abbreviations in the following table.

Metric Tables

Meter (m)	– Unit of length	milli (m)	0.001
Liter (l)	– Unit of volume, capacity,	centi (c)	0.01
		deci (d)	0.1
gram (g)	– Unit of weight	deka (d)	10.
are (a)	– Unit of area for land	hecto (h)	100.
		kilo (k)	1000.

Simplicity of the Metric System

The metric system was invented for simplicity. Many look upon the system as difficult because they consider the difficulties of changing from the common to the metric system, or from the metric to the common, as difficulties of the metric system. All such difficulties would disappear if the metric system were in universal use. Practically, where the two systems are in use, one or the other is used almost entirely, and one seldom needs to change from one system to the other. The simpleness of the metric system lies in two facts: (1) it is decimal, and therefore fits our decimal notation; (2) its units for lengths, surfaces, solids, and weights are all dependent on one unit, the meter. Ability to handle the metric system easily depends, in great part, on understanding thoroughly the terms used. It is of first importance then to learn well these terms and their meanings. For instance, the word decimeter should mean, at once, one-tenth of a meter. Because of the decimal relations between the different terms used, the changing from one unit to another is a very simple matter. In reducing to higher denominators, simply divide by 10, 100, 1000, etc., by moving the decimal point to the left. Thus, to change 3768 cm. to meters, divide by 100 by removing the decimal point two places to the left and have:

3768 cm. = 37.68

In a similar manner 72,468 g. = 72.468 kg., and 8643 l. = 86.43 hl. It should be noticed that it is never written as 4 km, 7 hm, 3 dkm 5 m., but as 4735 m. The former way of writing it would be similar to writing $ 7.265 in the form 7 dollars 2 dimes 6 cents 5 mills. In reducing to lower denominations, the multiplication is performed by moving the decimal point to the right.

Thus, 25 m. = 250 dm. = 25,000 mm., and 16 kg. = 16,000 g.

Changing from Metric to Common or Vise Versa

The changing from one system to another is simply a matter of multiplication or division.

(1) Thus, to express 17 m. in inches:

1 m. = 39.37 in.
17 m. = 39.37 in. X 17 = 669.29 in.

(2) Also, to express 2468 lbs. in kilograms.

2.2 lbs. (approx.) = 1 kg.
2468 lbs. = 2468 ÷ 2.2 = 1121.8 kg.

DETERMINING WATER PRESSURE

Discussion:

When water is stored in a tank, it exerts pressure against the walls of the tank, whether the walls are horizontal, vertical, or oblique. The force is exerted perpendicular to the wall in all cases. The pressure on a given area is equal to the weight of a column of water of that area in cross section and of height equal to the distance that the given area lies below the surface of the water. This distance is spoken of as the HEAD. Thus, the pressure on a square inch of the wall at a depth of 10 feet is equal to the weight of a column of water 1 sq. in. in cross section and 10 feet high.

If 1 cu. ft. of water weighs 62.5 lbs., then a column 1 ft. high and 1 sq. inch in cross section weighs 0.434 lbs. Why? See FIGURE 30. Hence, the following rule may be used for finding the pressure per square inch at any depth.

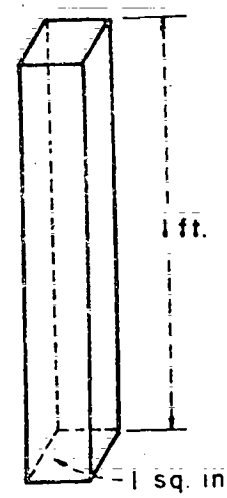

FIGURE 30

RULE: Multiply the head of the water in feet by 0.434. The result is the pressure in pounds per square inch.

Problem:

What is the pressure per square inch on the circular bottom of a tank if the head of water is 45 feet? What is the total pressure on the bottom of the tank if the area of the bottom is 3.1416 sq. ft.?

Procedure:

1. Determine the pressure per sq. inch.
   $45 \times 0.434 = 19.53$ lbs. per sq. in.

2. Determine the total numbers of lbs. per sq. ft. pressure on the tank bottom.

(144 sq. in. 1 sq. ft.)

19.53 X 144 2811.32 lbs. per sq. ft.

3. Calculate the total pressure on the tank bottom.

2811.32 X 3.1416 = 8824.7 lbs. — Answer

CALCULATING WATER PRESSURE AND HEAD

Discussion:

If water is piped down a hill from a sufficient height, its force can be made to run the sprinklers. To accomplish this requires the water-source to be higher than the field to be irrigated. This method of irrigation usually requires a greater amount of pipe over longer distances.

To calculate the actual cost and feasibility of this method requires knowledge of:

1. The height of the hill.
2. The force (PSI) required to operate the sprinkler heads.
3. Amount of pipe required.

Problem:

At what height on a hill with a 30° or 57.735% slope must water be confined in a pipe to give 65 PSI pressure at the sprinkler heads? How many feet of pipe will be required?

Procedure:

1. Layout information as illustrated in FIGURE 31.

2. Determine the height necessary to give 65 PSI. A water table indicates that 1 PSI is equal to 2.31 feet of height. Thus:

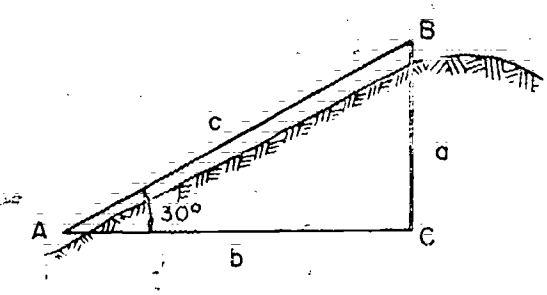

FIGURE 31

65 PSI X 2.31 feet = 150.15

a = 150.15 feet

SPRINKLER HEAD SIZE FOR WATER INFILTRATION RATE

Discussion:

The sprinkler system is a relatively new method of irrigation. A good sprinkler system can usually put more land into production than surface irrigation methods. The cost of a sprinkler system may cost less than land leveling.

The cost of power to operate a sprinkler system frequently discourages its use. As the cost of labor, water and land go up or the desire for more uniform distribution of water is increased, the sprinkler system becomes more economically feasible.

One of the main factors that will have to be initially determined if a sprinkler system is to be used is the application rate of water compared to the intake ability of the soil.

The application rate should not be faster than the infiltration rate of the soil. The average final intake rate in inches per hour on soil is listed in FIGURE 32.

SOIL TYPE	INTAKE RATE IN INCHES PER HOUR
Clay less than	0.1
Clay loam	0.2
Silt loam	0.5
Silt	1.0
Sandy loam	2.0
Sand	3.0

FIGURE 32

Average Final Intake Rates for Different Soils

Problem:

A sprinkler system has eight gallons per minute heads. Can this sprinkler be used on silt loam soil if set to cover a 40′ × 60′ ?

Procedure:

1. Determine the total amount of water in gallons per hour that the sprinklers disperse.

   8 gallons/minute × 60 minute/hour = 480 gallons/hour.

2. Determine the total amount of land in acres to be irrigated.

   40 ft. × 60 ft. = .000023 = .0552 acres.

3. Determine the amount of gallons/acre/hour.

   $$\frac{480}{.0552} = 8{,}695 \text{ gallons per acre per hour.}$$

4. Tables in the back of the book indicate that:

   1 acre inch of water = 27,156 gallons. Using this figure, determine the number of inches per hour of water applied.

   $$\frac{8{,}695}{27{,}156} = 0.32 \text{ inches per hour.}$$

5. Compare the 0.32 inches per hour sprinkler output with the information in FIGURE 32.

If this rate were applied on a clay soil with average intake rate of 0.1 inches, water would run off, erode the field, and increase costs of pumping and draining. Thus the answer to the question is NO.

CALCULATING FLOW OF WATER OVER WEIRS

Discussion:

The term weir is used to describe a notched opening made in the upper edge of a vertical wall or board, through which water is allowed to flow for the purpose of measurement. Weirs should be constructed in standard simple geometrical shapes. The notch should be sharp-edged, and no more than 1/8 inch thick, so that the stream touches only a line. The opening types, easiest to construct, are the triangular, rectangular, and trapezoidal.

The Triangular, V-notch, weir has the advantage of being the simplest to construct. The 90° angle is the most commonly used angle for the V-notch weir. To construct, cut a 90° V-notch in a plate. The plate as shown in FIGURE 33 is placed in a ditch in a vertical position across the stream. The crest or head " H " of water is measured from the bottom of the V-notch to water surface at a point upstream from the weir where the surface draw-down curve does not affect the measurement. A calibrated stake driven into the pool at a distance upstream at least six times the maximum head on the weir, will give an accurate method of checking the crest or head " H ". Properly constructed, the V-notch weir requires a greater head loss than other types of weirs. It is better adapted to measuring flow not exceeding 4 cubic feet per second.

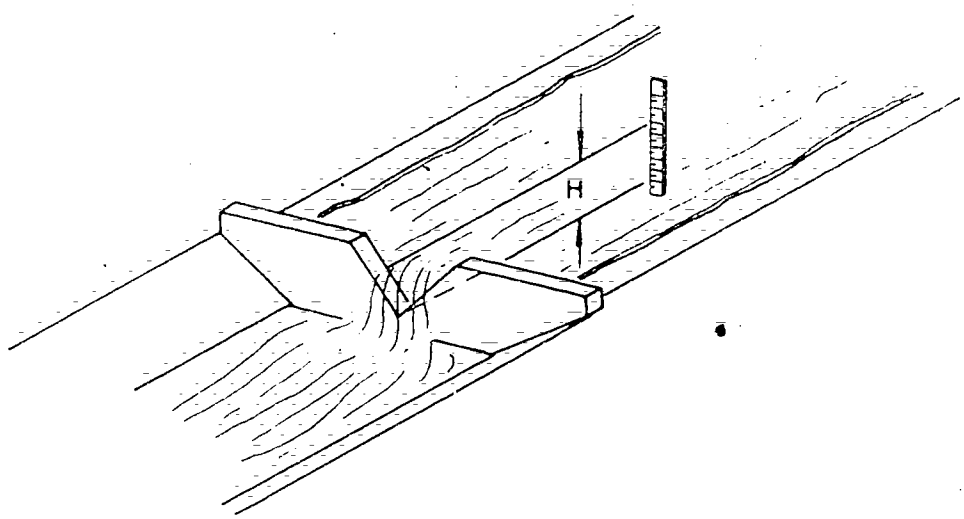

FIGURE 33

The rectangular contracted weir shown in FIGURE 34 takes its name from the location and shape of the opening through which the water flows.

It was one of the earliest types used. All other types of weirs have developed from the rectangular weir. It is still one of the most popular weirs.

The water must fall free with no restrictions from the downstream side of the weir. The upstream side of the weir, should be wide and deep enough, so the water will approach the weir free from eddies, at a velocity of less than .5 feet per second.

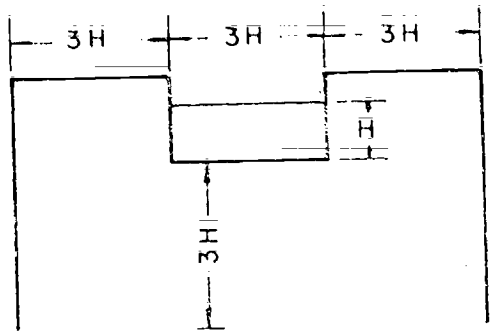

FIGURE 34

Flow over rectangular contracted weirs as measured in cubic feet per second can be obtained by finding the head and reading across the flow chart in the back of this book to the column under the crest or the width of the weir.

Problem:

How many cubic feet of water per second are flowing over a rectangular contracted weir if the head is 4 3/16 inches and the crest of the weir is 1 1/12 feet?

Procedure:

1. Turn to the flow charts dealing with rectangular weirs at the back of this book.
2. Find the number 4 3/16 inches under "Head in Inches."
3. Trace line of figures to the right until the column labled 1.5 feet is reached. Answer: .999 is the Flow in cubic feet per second.

Problem:

If the head "H" on a V-notch weir is 8 1/4 inches, what is the flow in feet per second and gallons per minute?

Procedure:

1. Turn to the Flow Charts dealing with V-notch weirs at the back of this book.
2. Under the Flow over 99° V-notch weir, find 8 1/4 inches.
3. Under the title, Head in inches approximately, read to the right the answers: .991 under Flow cubic feet per second and 445 under Flow in gallons per minute.

CALCULATING THE FLOW OF WATER USING THE FLOAT METHOD

Discussion:

The float method gives an approximate measure of the rate at which stream water is flowing. It is used where a quick estimate of the flow is desired and when a high accuracy is not required.

Select a straight section of the stream or ditch with fairly uniform cross-sections. The length of the section (about 50 to 100 feet) will depend on the rate of the current. Make several measurements of depth and width within the trial section to arrive at the average cross section area. Stretch a string or tape across each end of the section at right angles to the direction of flow as illustrated in FIGURE 35. Place a small object which will float in the stream, a few feet up-stream from the upper-end of the trial section. Record the time the float takes to pass from the upper to the lower section. Make several trials to get the average time of travel.

To calculate the velocity in units of feet per second, divide the length of the section (in feet) by the time (in seconds) required for the float to travel that distance:

$$V = \frac{D \text{ (in feet)}}{T \text{ (in seconds)}}$$

Since the velocity of the float on the surface of the water is greater than the average velocity of the stream, it is necessary to correct the measurement by multiplying by a coefficient—usually .80. To obtain rate of flow, multiply this average velocity (measured velocity X coefficient) by the average cross sectional area.

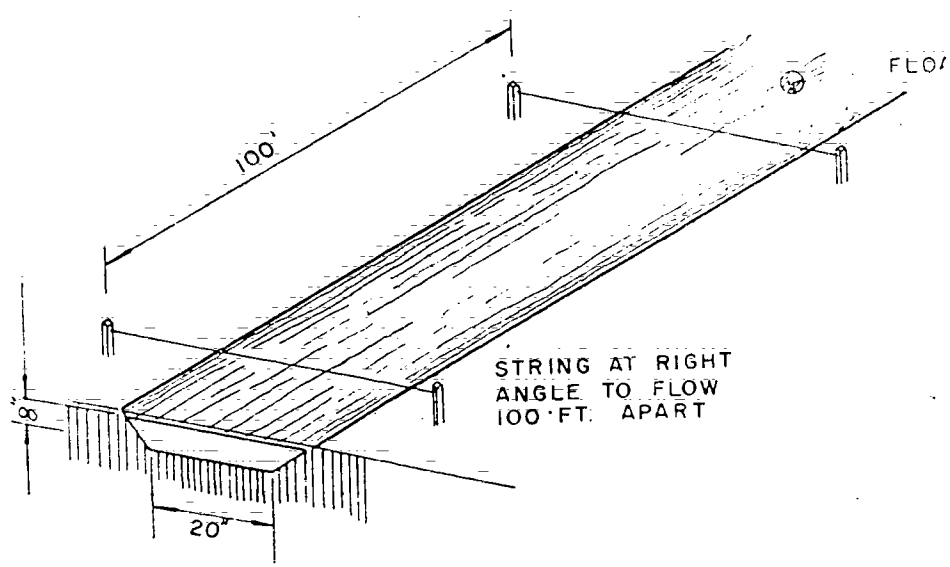

FIGURE 35

Problem:

A trapezoid shaped stream is found to have an average depth of 8 inches. The stream average surface width is 28 inches. The average bottom width of the stream is 20 inches. The average time for a floating object to travel 100 feet is 32 seconds. What is the flow in cubic feet per second?

Procedure:

1. Determine the velocity of the float.

$$V = \frac{\text{distance}}{\text{time}}$$

$$V = \frac{100 \text{ feet}}{32}$$

$$V = 3.125 \text{ feet/second}$$

2. Determine the area of the trapezoid.

$$A = \frac{\frac{28}{12} + \frac{20}{12}}{2} \times \frac{8}{12}$$

$$A = 2 \text{ feet} \times \frac{2}{3} \text{ feet.}$$

$$A = 1\ 1/3 \text{ square feet.}$$

3. Determine the quantity of flow.

$$Q = \text{velocity} \times \text{cross sectional area} \times .80.$$

$$Q = 3.125 \times 1.333 \times .80.$$

$$Q = 3\ 1/3 \text{ cubic feet/second.} \quad \text{—Answer.}$$

MEASURING IRRIGATION WATER

Discussion:

Irrigation of crops is nearly as old as agriculture itself. For maximum growing efficiency plants need a continuous supply of moisture. Very few parts of the world have rainfall so ideally distributed that application of irrigation water could not be used to an advantage at some period of crop production.

There are a number of methods for measuring irrigation water being applied to a section of land. The simplest method that will give the degree of accuracy needed is usually the best. For small streams the rate of flow of the water can be determined by collecting the flow in a container of known volume and dividing by the time required to fill it. For example:

A stream fills a 5 gallon container in 30 seconds.

$$\frac{5 \text{ gallons}}{30 \text{ seconds}} \times \frac{60 \text{ seconds}}{\text{minute}} = 10 \text{ gallons/minute.}$$

Thus the amount of water that can be applied from the stream to the land is 10 gallons every minute.

On a large scale the filling or emptying of a lake or tank in a given time period can be used to determine the rate of flow.

Problem:

A lake with a surface area of 96 acres is being lowered 2 inches every 24 hours because water is being used for irrigation of a nearby valley. Assuming the flow into the lake is equal to seepage and evaporation loss, what is the rate of discharge in gallons in one hour?

Procedure:

1. Determine the amount of acre feet the lake will discharge in 24 hours.

$$96 \times \frac{2 \text{ in. of drop}}{12 \text{ ins. per ft.}} = X$$

$$96 \times \frac{1}{6} = 16 \text{ acre/feet of discharge/24 hour.}$$

2. The list of equivalents for computing volume to flow units indicates that one acre foot of water is equal to 325,851 gallons. Thus, the total gallons expended are:

   325,851 X 16 = 5,113,616 gallons.

3. Determine the rate of discharge each hour.

   5,113,616 ÷ 24 hrs. = 213,067 1/3 gallons/hr. —Answer.

CALCULATING MAXIMUM RATES OF RUNOFF

For the protection of roads, irrigation systems, buildings and fields, the maximum rate of runoff should be known and allowed for in the design of channels, ditches, pipes or structures used for drainage.

When flooding is not permissible, the maximum instantaneous peak rate of water runoff should be determined. Most drainage structures can be flooded for a short time. It may be more economical to design these structures on a basis of safely handling floods up to a 5, 10, 25 or 50 year recurrence expectancy. This means you would be planning a runoff or drain structure large enough that it would probably be flooded only one time in fifty years. (If fifty year expectancy is used.) It must be remembered, the " once in fifty years ", may happen the same year the structure is built.

In calculating runoff on small water-sheds, this formula has wide usage:

$$Q = CIA$$

Q = Flood peak, (CFS) cubic feet per second.
C = Runoff coefficient.
I = Maximum rain intensity, inches per hour.
A = Drainage area in acres.

For a drainage area in a diversified farming area, the values of C is often used as 0.50. Some of the figures for C under varying conditions are as follows:

on 5 to 10% slope:

Cultivated land	C is 0.60.
Pasture land	C is 0.36.
Timber land	C is 0.18.

As the slope increases to 10 to 30%, the values for C increases to:

0.72 for cultivated land.
0.42 for pasture land.
0.21 for timber land.

Values for C are generally increased to 0.90 for the 100-year storm.

When the value of C is used as .50 X 2.5A = 1.25A

Example:

Find the (Q) cubic feet per second peak run-off of 600 acres if 1/2 of the rainfall runs off the land and 2 1/2 inches of rain falls in one hour.

Q = .50 X 2.5 X 600 = 1.25 X 600 = 750 cubic feet per second.—Answer.

COST OF LIFTING WATER FROM A WELL

Discussion:

Water for irrigation usually comes from bodies of water on the land surface like streams and ponds or it is pumped up from underground sources such as wells. In the latter case, there are additional expenses for electricity and the pump.

To determine the cost of irrigation from a well, will require use of the following formulas and basic mathematics.

Work = force X displacement.

W = F X D

$$\text{Horsepower} \quad \frac{\text{number of foot/lbs. per minute}}{\text{time in minutes}}$$

Problem:

What will be the cost of irrigating one acre of land in India from a well 15 feet deep? The pump discharges 4 feet above the ground. The pipe and pump loss of energy is equal to 1 foot of head. Electricity in India costs 50 Paise per kilowatt hours (KWH). Three inches of water are required to irrigate each acre. Disregard the cost of the pump.

Procedure:

1. Determine the total effective head.

   15 ft. + 4 ft. + 1 ft. = 20 ft. effective head.

2. Determine the number of square feet in one acre by consulting the appropriate table of equivalence.

   1 acre = 43,560 sq. ft.

3. Substitute values in the formula for work (W).

   W = F X D.
   W = 20 ft. X 1/4 ft. X 43,560 sq. ft.
   W = 5 ft. X 43,560 sq. ft. = 217,800 cu. ft.

4. The weight of water is 62.5 lbs. per cubic ft. Multiplying this by the number of square feet will equal the total amount of foot/pounds involved.

   62.5 X 217,800 = 13,612,500 ft./lbs. of work.

5. Horsepower equals the rate at which work is done.

1 HP 33,000 ft. lbs. per minute. 1 HP .7457 KWH. The formula for HP is:

$$HP = \frac{\text{ft. lbs. of work}}{33{,}000 \times 60 \text{ min.}}$$

6. Substitute values in the formula and solve for HP.

$$HP = \frac{5 \times 43560 \times 62.5}{33{,}000 \times 60 \text{ min.}}$$

HP 6.87

7. Solve for horse power/hour when:

1 HP hour is equal to .7457 KWH.

6.87 X .7457 5.12 KWH.

8. Calculate the total cost of the power consumed.

50 Paisee X 5.12 KWH 256. Paisees or 2.56 Rupees—Answer.

BUILDING FOUNDATION LAYOUT WITHOUT A SURVEYING INSTRUMENT

Discussion:

The foundation for a four sided building may be laid out on reasonably flat land without the use of a surveying instrument. Foundations laid out in this manner can be used for houses, animal loafing sheds, utility buildings, dairy barns, etc.

A fifty or one hundred foot steel tape in good condition will be needed in addition to wood for batten boards and string. The layout method to be used as illustrated in FIGURE 36 is based on the geometric rule that the hypotenuse of a right triangle is equal to the sum of the two sides.

$4 \times 4 = 16$
$3 \times 3 = 9$
25

Both Equal

$5 \times 5 = 25$

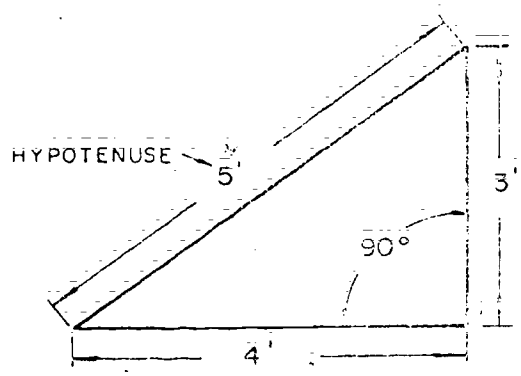

FIGURE 36

Problem:

To lay out a building foundation which will be 15 feet by 25 feet without the use of a surveying instrument.

Procedure:

1. Set four temporary stakes to mark the approximate outline of the building, as shown in FIGURE 37.

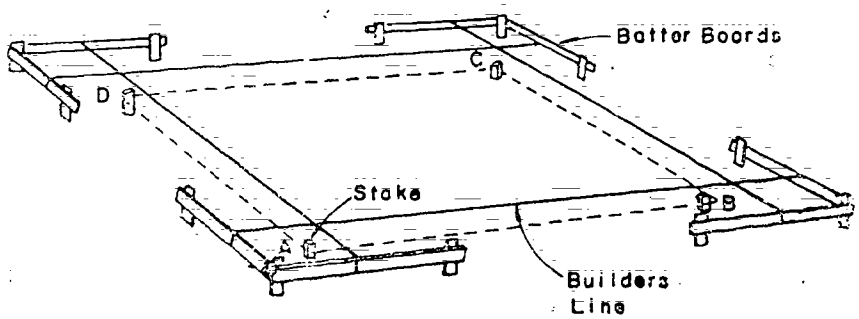

FIGURE 37

2. Set up batten boards 2 to 4 feet from the stakes as illustrated in FIGURE 37.

3. Measure the correct distance desired for side A, B and adjust the stakes accordingly. In this case, the distance between A, B will be 25 feet.

4. Extend builders line directly over stakes A, B and tie at E, F.

5. Mark the builders line at B. A pin, small nail or an ink mark through the line will be satisfactory.

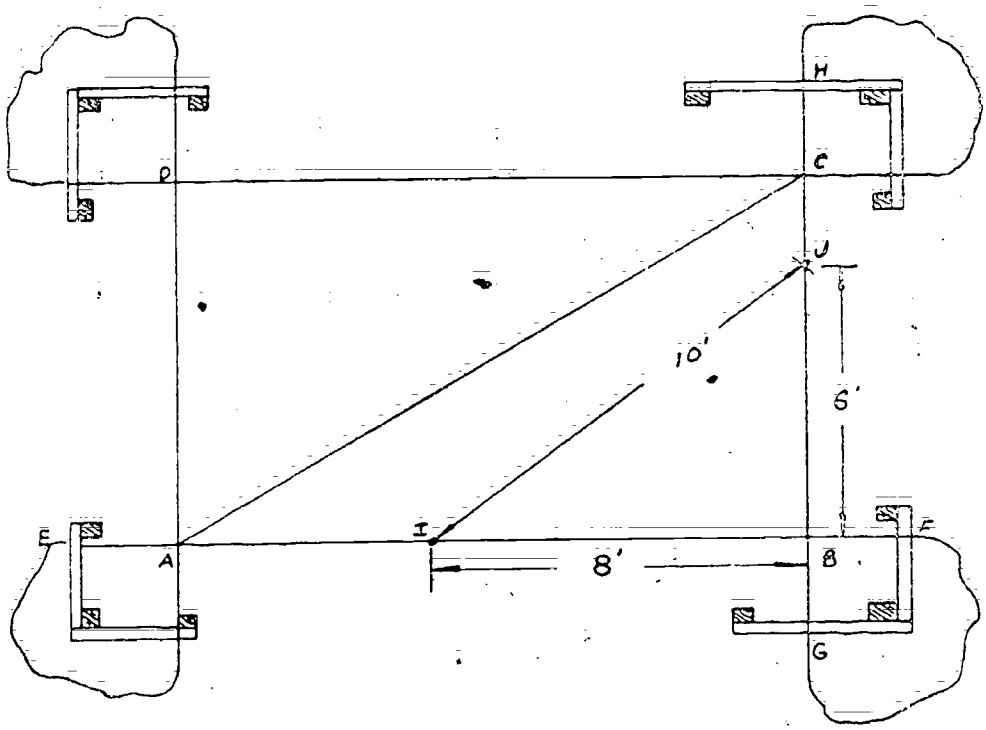

FIGURE 38

6. Tie weights on the builder line and extend over points G, H as shown in FIGURE 38.

7. Measure 6 feet from point B and mark at point J.

8. Measure 8 feet from point B and mark at point I.

9. From point I, extend the tape measure to point J. Move the string to point H so the 10 foot mark on the tape measure meets point J.

10. Steps 5 to 9 may have to be repeated to make minor adjustments. When completed, side A, B and B, C should be at a 90° angle to each other.

11. Measure the correct distance from B and fix corner stake C. In this problem, side B, C is 15 feet long. Thus A, B and B, C are located.

12. From A, measure the length of side A, D. From point C, measure the length of side C, D. Where the two lines intersect at point D, fix the corner stake.

13. Accuracy of work may be checked by cross measuring. The distance from A to C should equal distance from B to D.

ESTIMATING THE COST OF STONEWORK

Discussion:

Stonework in which the stones are broken with a hammer only is called rubblework. If the stones are laid in courses, it is called coursed rubble. When the stones showing in the outside face of a wall are squared, the work is designated as ashlar. If all the stones of a course are of the same height, the work is called coursed ashlar. When the stones are of different heights, it is called broken ashlar. Ashlar work is both hammer-dressed and chisel-dressed. Any stonework in which any other tool than a hammer is used for dressing is called cutwork.

In estimating the cost of stonework, the custom varies greatly. Usually, cut-work is measured by the number of square feet in the face of the wall. Rubblework is almost universally measured by the perch, but the perch used varies greatly. The legal perch of 24 3/4 cu. ft. is seldom used by stonemasons. The perch of 12 1/2 cu. ft. is the one most used. That of 25 or of 22 cu. ft. is sometimes used. Openings, as a rule are not deducted if containing less than 70 sq. ft.

Problem:

Determine the cost of laying a hammer-dressed ashlar wall, 45 ft. long, 6 ft. high and 2 ft. thick, at $ 4.75 per perch, using the 22 cu. ft. perch.

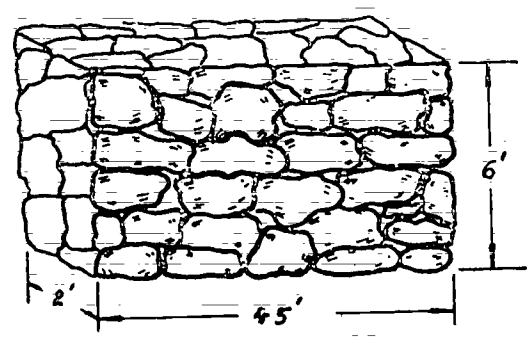

FIGURE 39

Procedure:

1. Calculate the total number of cubic feet in the wall.

   L X W X H = cu. footage.
   45 X 2 X 6 = 540 cu. ft.

2. Determine number of perches in the wall.

   $$\frac{540}{22} = 24.05 \text{ perches.}$$

3. At a cost of 4.75 per perch, calculate the cost of the wall.

   24.05 X 4.75 = $ 114.23

CONCRETE MIXES AND CALCULATION OF CUBIC YARDAGE

Discussion:

It is often necessary to repair broken concrete, build a wall, or apply a concrete surface. These activities require some knowledge of making concrete. Concrete is a mixture of cement, sand and gravel. The cement is the bonding agent which hardens and holds everything together.

A good mixture for slab blocks or sidewalk repair is 1: 2: 3. This means one part cement, two parts sand, and three parts gravel. Concrete walls which support slopes, roofs, and stone or rock floors will require a mixture of 1: 2 (one part cement and two parts sand.)

The aggregate size used, will depend on the type of work to be done. Generally aggregates should not be larger than 1/4 thickness of the concrete slab or wall being constructed.

In concrete subject to severe wear, weathering or weak acid or alkali solutions, 5 gallons of water per sack of cement should be used. For concrete that is to be water tight or subject to moderate water and weather, use 6 gallons of water per sack of cement. For foundations, walls, footing and massive concrete construction, 7 gallons of water for each sack of cement is suggested. It is assumed that the sand and aggregate are dry.

A cubic yard is the measure used for concrete. Thus the amount of concrete required for a given job will be computed on the basis of the total number of cubic yards in the job.

Problem:

A foundation is to be poured for a building. The outside dimensions are to be 20 feet X 50 feet. The foundation is to be 6 inches thick, extending 18 inches above a 30 inch wide and 6 inch thick footing. As an aid against rat infestation, the footing is to be extended 18 inches beyond the outside of the foundation.

How many cubic yards of concrete will be required? What is the maximum aggregate size that should be used?

Procedure:

1. Draw a cross section diagram of the foundation as illustrated in FIGURE 40.

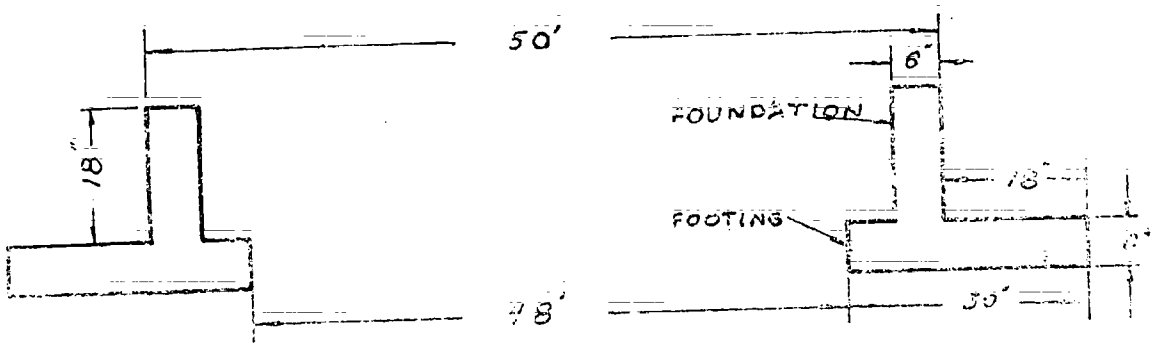

FIGURE 40

2. Determine the aggregate size.

   The thickest cross section is 6 inches.
   1/4 X 6 = 1 1/2 inches.

   (Aggregate should not exceed this size).

3. Determine the number of cubic feet in the footing section.

$$(23' + 23' + 48' + 48') \times \frac{30''}{12} \times \frac{6''}{12} = 142 \text{ ft.} \times \frac{5}{4} \text{ ft.}^2 = 177.5 \text{ cu. ft.}$$

4. Determine the number of cubic feet in the foundation section.

$$(20' + 20' + 49' + 49') \times \frac{6''}{12} \times \frac{18''}{12} = 138 \text{ ft.} \times 3 \text{ ft.}^2 = 103.5 \text{ cu. ft.}$$

5. Total the two sections and compute for the total number of cubic yards of concrete required.

$$177.5 + 103.5 = 281 \text{ cubic feet}; \quad \frac{281}{27} = 10.4 \text{ cubic yards.—Answer.}$$

CALCULATING STRENGTH FOR WOODEN BEAMS

Discussion:

There are three classes of beams, illustrated. They are CONTINUOUS, SIMPLE and CANTILEVER.

The SIMPLE BEAM (FIGURE 41) is supported at each end by a bearing wall.

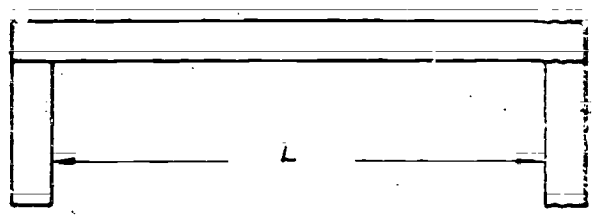

FIGURE 41

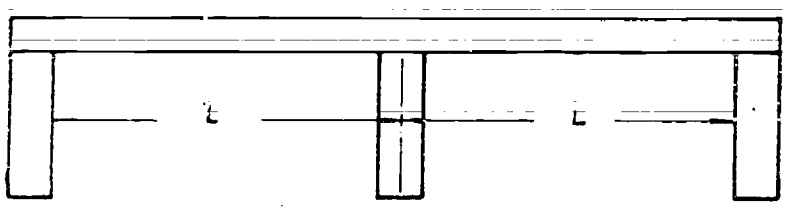

FIGURE 42

The CONTINUOUS beam (FIGURE 42) is supported in its center. This type of beam is always supported at one or more places along its length.

The CANTILEVER beam in FIGURE 43 is rigidly supported at one end.

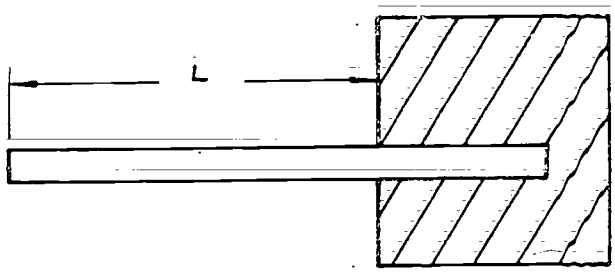

FIGURE 43

The strongest beam shown per foot of length is the continuous type. For each of these beams the formulas in FIGURE 44 are used when determining its correct dimensions.

TYPE OF SPAN	CONCENTRATED LOAD AT CENTER OF SPAN	UNIFORMLY DISTRIBUTED LOADS
CONTINUOUS	$BM = \frac{1}{6} WL$	$BM = \frac{1}{12} WL$
SIMPLE	$BM = \frac{1}{4} WL$	$BM = \frac{1}{8} WL$
CANTILEVER	$BM = WL$	$BM = \frac{1}{2} WL$

FIGURE 44

BM – Bending Moment of Span.
W – Load in Pounds.
L – Length of Span in Inches.

Wood is of such variable quality that a safety factor of 6 is usually used. The average safe fiber stress (SFS) for most wood in use is 1200. Some of the SFS for different woods are:

Cedar	–	1000
Hickory	–	2533
Douglas fir	–	1200
Oak	–	1100
Redwood	–	1600

These figures are for clear material. Woods with knots and defects would have a lower figure.

$$\frac{BM}{SFS} = SM = \text{Section Modulus.}$$

The section modulus of a rectangular beam is $SM = \frac{1}{6} bd^2$.

Where b – breadth of beam in inches.
d – depth of beam in inches.

$$\frac{BM}{SFS} = 1\ bd^2$$

Problem:

A house is built of cut granite stone. One room is left open with an 11 foot width opening. The space above the opening is enclosed in a cut stone wall 16 inches in thickness and 5 feet high. If the beam for this opening is made out of seven inch material, what is the depth thickness required?

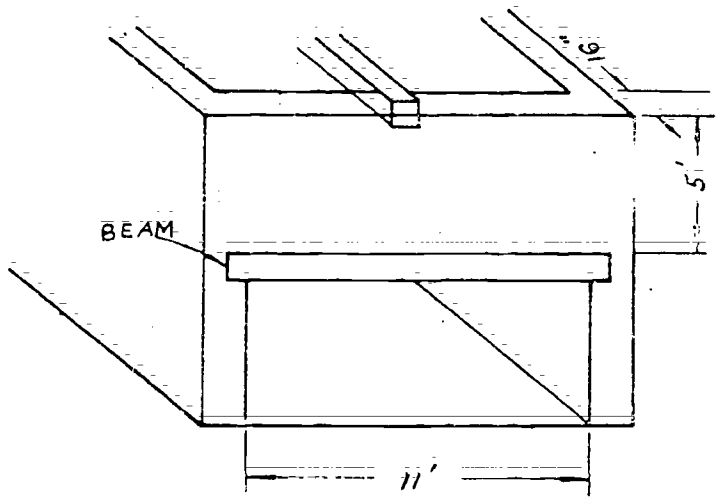

FIGURE 45

Procedure:

1. Determine the weight of the load on the beam.

$$W = \frac{16''}{12''} \times 11' \times 5' \times 172 \frac{\text{lbs.}}{\text{ft.}^2} \text{ of granite.}$$

$$W = 12{,}607.6 \text{ lbs.} = \text{approximately } 12{,}600 \text{ lbs.}$$

2. Referring to FIGURE 44, select the formula for a simple beam with uniformly distributed load and solve for BM.

$$BM = \frac{1}{8} WL$$

$$BM = \frac{1}{8} \times 12{,}600 \text{ lb.} \times 11 \text{ ft.} \times 12 \text{ inch/foot.}$$

$$BM = 207{,}900 \text{ inch-pound.}$$

3. Use 1200 for the safe fiber stress in bending for wood material. Dividing the bending moment (BM) by the safe fiber stress (SFS) for the material gives a figure from which the size and shape of beam can be determined. This term is called the section modulus (SM). This relationship is expressed by the formula $\frac{BM}{SFS} = SM$.

The formula for the section modulus of a rectangular beam is

$$SM = \frac{1}{6} bd^2.$$

Where b = breadth of the beam in inches
d = depth of the beam in inches.

Substituting in $\frac{BM}{SFS} = \frac{1}{6} bd^2$.

$$\frac{207{,}900}{1200} = 173.25 = \frac{1}{6} bd^2.$$

Using b as 7, $173.25 = \frac{1}{6} \times 7d^2$.

$$d^2 = 173.25 \times \frac{6}{7} = 148.50.$$

$$d = \sqrt{148.50}$$

$$d = 12.18 \text{ inches.}$$

The dimensions of the beam are <u>7 inches width and 12.18 depth.</u>

MEASURING LUMBER AND SLATE

Discussion:

Lumber and slate are measured in board measure. Timber used in framework is counted as lumber. Timber, lumber, and slate are sold by the 1000-foot board measure. This may be written as 1000 feet. (BM) But frequently, it is indicated by the single letter M.

One board foot (FIGURE 46) is 12 inches square and 1 inch thick and contains one-twelfth of a cubic foot.

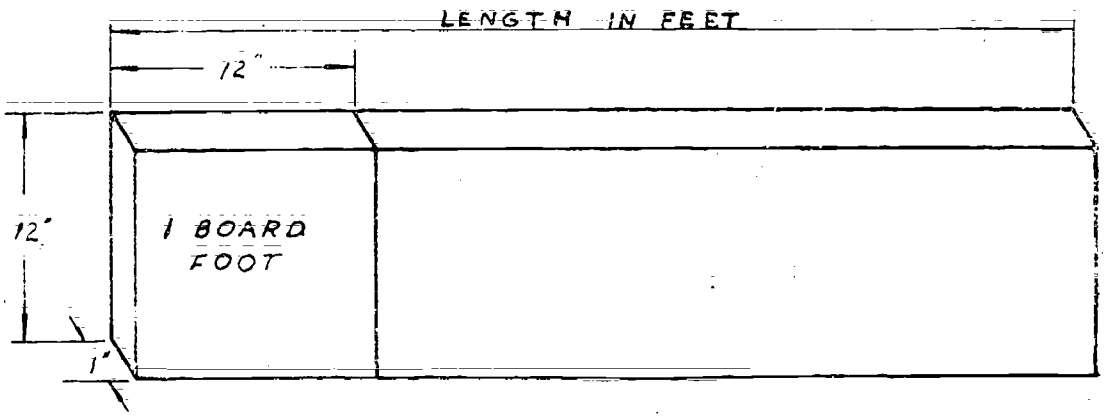

FIGURE 46

The number of board feet in dimension lumber is the number of cubic feet multiplied by 12. The following rule may be used to find the number of board feet in any dimension of lumber or slate.

RULE: Take the product of the end dimensions in inches, divide by 12 and multiply the quotient by the length in feet.

FOR EXAMPLE: The number of board feet in a beam 8 by 12 inches and 10 feet long would be:

$$\frac{8 \times 12 \times 10}{12} = 80 \text{ feet B.M.}$$

Problem:

A man builds a tight plank fence with 2 inch thick planks, around his livestock feeding area. It is 150 feet by 36 feet. The fence is 6 feet high and nailed at the top and bottom to pieces of 4 by 6 inch lumber. Assuming there is no waste, find the number of board feet of lumber used.

Procedure:

1. Compute the perimeter of the fence.

   150 + 36 + 150 + 36 = 372 feet.

2. Find the total length of all the 4″ by 6″ timber used.

   2 each for each foot of length. 372 feet X 2 = 744 feet.

3. Find the total length of the 2″ X 12″ planking used.

   372 X 6 = 2232 feet.

4. Find the number of board feet in 2232 feet of 2″ by 12″ plank.

   $\frac{2 \times 12}{12}$ X 2232 = 4464 board feet.

5. Find the number of board feet for 744 feet of 4″ X 6″ lumber.

   $\frac{4 \text{ X } 6}{12}$ X 744 = 1488 board feet.

6. The total number of board feet is the sum of answers in 4 and 5.

   4464 + 1488 = 5952 BOARD FEET.

MEASURING RAFTERS USING A STEEL SQUARE

Discussion:

One of the most useful instruments known to man is the ordinary steel square or carpenter's square shown in FIGURE 47. It is made in various sizes; the most common size is that with the longer arm, called the body, blade or stock 24 inches in length and 2 inches in width. The shorter arm, called the tongue, is 16 or 18 inches in length and 1 1/2 inches in width.

The principles involved in using the steel square are mainly those involved in the solution of the right triangle and of similar triangles. One who understands the right triangle can devise many uses for the steel square and can readily see the principles underlying the various uses of this instrument given in the discussion.

FIGURE 47

Upon the ordinary steel square are found many figures, telling lengths of braces, board measures, etc. No attempt will be made here to explain these.

The steel square can be used to measure the rise of a rafter or to mark off where a rafter should be cut.

Problem:

Using a carpenter's square, determine how long the rafter, illustrated in FIGURE 48, should be. It has a run of 8 feet and a rise of 7 feet.

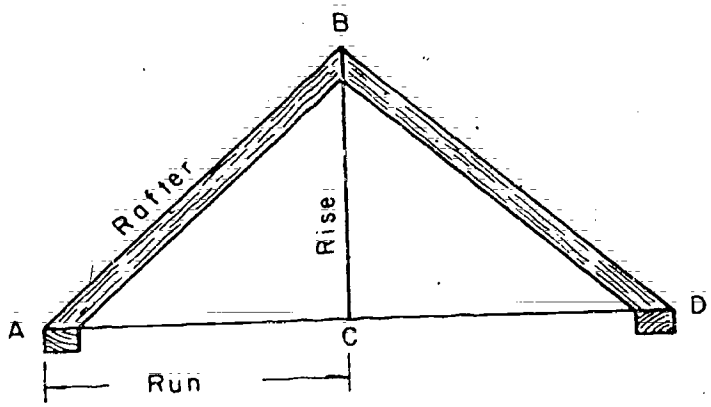

FIGURE 48

Procedure:

1. Determine the length of the rafter by using the carpenter's steel square and a ratio of 1" 1'.

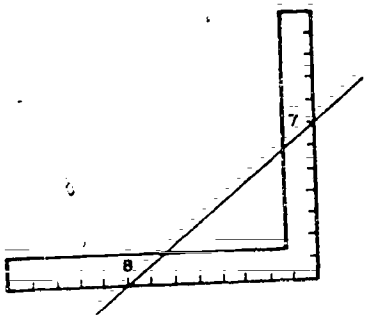

FIGURE 49

Measure the line drawn from the 8-in. mark on the blade to the 7-in. mark on the tongue. This measures about 10 5/8 in., (FIGURE 49) which is near enough for most practical purposes. (By the right-triangle method, the hypotenuse =

$\sqrt{8^2 = 7^2} = 10.63$ inches.)

This method can also readily be applied to find the lengths of braces supporting two pieces that are perpendicular to each other, to find rafter lengths, lengths of the parts of a trestle, etc.

2. The length of the rafter should be 10' 7 1/2" long.

3. To cut the level or slant at the end of the rafter (necessary to make it fit the part it rests against), can easily be marked. Place the square as shown in FIGURE 50 and mark along bottom edge. In placing the square on the board, it is necessary to only take the distances on the blade and tongue in the same ratio as the ratio of the run to the rise. To cut the top level, follow the same procedure used to cut the bottom.

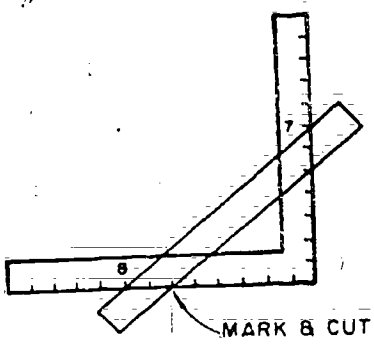

FIGURE 50

CALCULATING FOR ROLL PLATE AND CORRUGATED ROOFS

Discussion:

In the construction of buildings, sheds, barns, etc., corrugated sheets or roll plate are frequently used. Usually, these materials are made of galvanized iron or aluminium. FIGURE 51 illustrated that this sheeting is usually purchased in widths of 2′ 6″ and may vary in length from 6 to 10 feet.

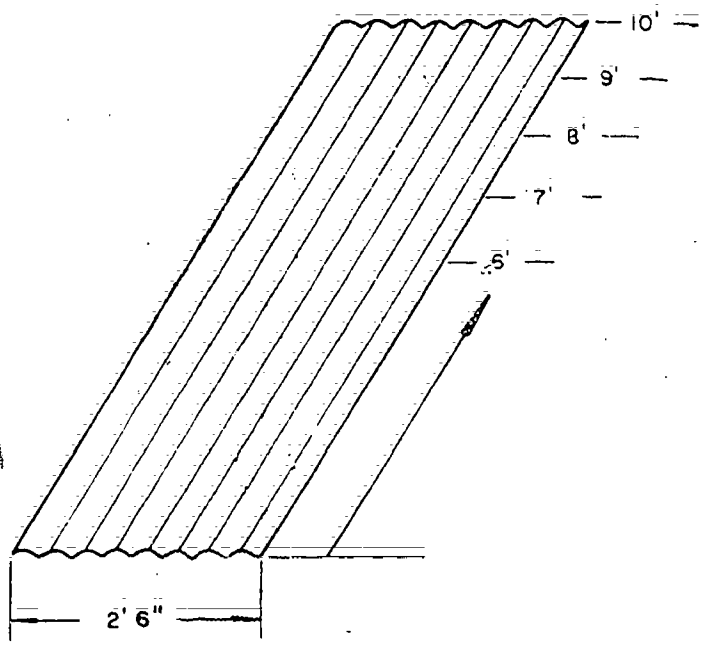

FIGURE 51

When corrugated sheets are laid for roofing, the edges are overlapped. This overlapping, called side-lap, is usually at least one and one-half corrugations which is approximately 4″. The top sheet is laid with the side edge turning down-ward as shown in FIGURE 52.

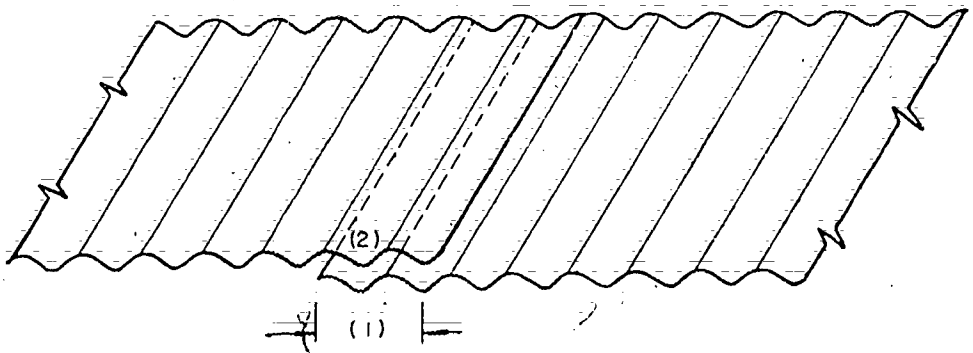

FIGURE 52

In addition to side lap, the ends must overlap as well. The flatter the roof, the greater the end lap must be. Since two pieces of metal are over-lapping at a given point, that point will require additional roof framing. A good rule to follow for end-laps is illustrated in FIGURE 53.

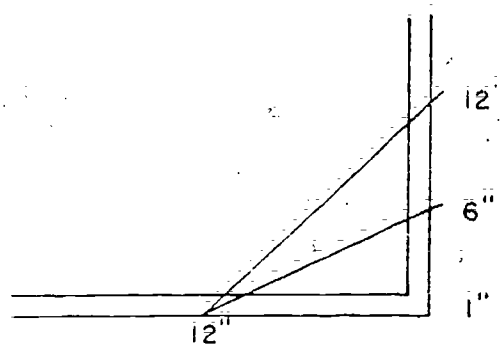

FIGURE 53

12" rise per ft., use 6" end lap

6" rise per ft., use 9" end lap

1" rise per ft., use 12" end lap

Problem:

A building is to have a pitched roof with a six inch rise per foot. One side of the roof will have a total surface area of 20′ X 40′. How many sheets of corrugated metal will be required and what dimensions should they be?

Procedure:

Calculate sheeting for vertical distance.

1. 2 ten foot sheets will not cover from ridge to eave and allow 6″ for end lap.

2. Thus three sections with two end laps are required.

   20′ + 6″ + 6″ = 21 feet.

3. Judge which combination of sheets will provide 21 feet of vertical distance. A good combination would be 9 ft. + 6 ft. + 6 ft.

4. Each vertical row would require one 9 ft. and two 6 ft. lengths of sheeting.

Calculate sheeting for horizontal distance.

5. Allowing 4″ for side lap, each 2′ 6″ sheet covers 2′ 2″

6. The horizontal distance for one side of the roof is 40 feet.

40 ÷ 2′ 2″ = 18.5 or 19 vertical rows to cover one side.

Summary

Each vertical row requires one 9 foot and two 6 foot lengths of sheeting.

38 rows (both sides of roof) X 1 – 9 ft. = 38 – 9 foot lengths required.

38 rows (both sides of roof) X 2 – 6 ft. = 76 – 6 foot lengths required.

UNIT D—PROBLEMS RELATED TO LAND LEVELING AND CROP PRODUCTION

DETERMINING THE SLOPE OF A FIELD

Discussion:

Due to land contour, one side of a field may be a different height. The simplest example of a sloping field would be one on the side of a hill. Knowing the procedure for calculating slope is important when confronted with problems in land drainage, irrigation or land classification.

Slope is expressed in percentage and is calculated by multiplying the vertical distance in feet by one hundred and dividing by the horizontal distance in feet. The formula for slope is:

$$S = \frac{H \times 100}{D}$$

H - height in vertical feet
S - slope
D - distance

Problem:

A field to be irrigated has a head ditch 1320 feet long on its high side. The difference in elevation of the two ends is 2.64 feet. What is the per cent of slope?

Procedure:

1. Determine the known values.

   S = slope
   H = 2.64
   D = 1320

2. Substitute the values in the formula and solve for S.

$$S = \frac{H \times 100}{D}$$

$$S = \frac{2.64 \text{ ft.} \times 100}{1320}$$

S = 0.2% slope—Answer

This means the land falls at a rate of two-tenths of a foot for each one hundred feet of horizontal distance or .2 X 12 in. = 2.4 inches per 100 feet.

COMPUTATION OF SEED CLEANING COSTS

Discussion:

Farmers clean field-run seed as an important step toward improved crop production. This cleaning removes dirt, stones, weed seeds, chaff, etc. It can be done either mechanically or by hand, using a sieve-like device.

Problem:

A farmer purchases 2,000 lbs. of field-run wheat seed at $ 2.50 per one hundred weight. He hires a person to clean the wheat at a rate of $ 2.00 per hour. The job takes 3 hours to complete. After cleaning, it is found that 400 lbs. of foreign materials had been removed from the seed purchased. What is the final cost per one hundred weight of the planting seed after consideration of the costs involved?

Procedure:

1. Determine the cost of the seed.

   2,000 lbs. seed purchased.
   100 lbs. = 1 hundred weight.
   $ 2.50 = cost per hundred weight of seed.

   2,000 ÷ 100 = 20 hundred weights purchased.
   20 X $ 2.50 = $ 50.00 total cost of seed.

2. Determine the cost of labor involved.

   3 hours labor
   $ 2.00 per labor hour cost
   3 X $ 2.00 = $ 6.00 total cost for labor.

3. Determine how muc seed was left after cleaning.

   2,000 lbs. – 400 lbs. = 1600 total seed remaining after cleaning.

4. Determine the cost of the cleaned seed.

$ 56.00 ÷ 1600 lbs. = $ 3.50 cost per hundred weight of wheat seed that can be used.—Answer.

VOLUME OF A PILE OF GRAIN

Discussion:

Grain, dirt and other materials are often piled on the ground. These piles are usually in the shape of a cone. To determine how much volume a pile consists of will require use of some elementary algebra. Once the volume of the cone is known and expressed in a particular unit, its weight can also be determined by using Volume/Weight tables.

The formula for Volume of a cone is:

$$V = r^2h$$

V = Volume
π = 3.1416
r = radius
h = height

Problem:

Determine the volume and hulled weight of the pile of unhulled rice, illustrated in FIGURE 51, when the per cent of recovery is 70% of the gross weight.

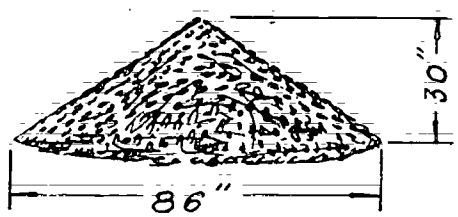

FIGURE 54

Procedure:

1. Determine the value for h expressed in feet.

   h = 30" = 2.5 feet.

2. Determine the value for r^2 expressed in feet.

   $$r = \frac{86}{2}$$

   r = 43" or

   r^2 = 43" X 43" = 1849 sq. in.

3. Substitute the known values in the formula and solve for V.

$$V = \frac{\pi}{3} r^2 h$$

$$V = \frac{3.1416}{3} \times \frac{43}{12} \times \frac{43}{12} \times 2.5$$

$$V = 1.047 \times \frac{1849}{144} \times 2.5$$

$$V = 1.047 \times 1285 \times 2.5$$

V = 33.6 cubic feet/volume of unhulled rice.

4. The weight of the rice is 36.2 lbs. per cubic foot.

Determine the weight of the rice in the pile.

36.2 lbs./cu. ft. X 33.6 cu. ft. = 1216.3 lbs. total w[illegible] of unhulled rice.

5. Determine the per cent of recovered rice.

1216.3 X .70 = <u>851.4 lbs. of hulled rice.—Answer.</u>

ESTIMATING YIELDS

Discussion:

People engaged in agriculture often need to estimate the yield per acre for a given crop. These estimates aid in computing storage needs, labor required for harvest, differences in test plot production and probable income from a crop. A close approximation of potential yield can be found by harvesting a small fraction of an acre. The harvested material is weighed and the resulting pounds per square foot are converted to pounds per acre. There are several methods used to estimate yields. For this reason two problems have been included.

Problem:

Estimate the yield per acre for hybrid corn planted in rows 38 inches apart. (Assume that the row being sampled has 19 inches on each side.)

Procedure:

1. Randomly select two rows and pick corn for 25 feet.

   (Assume 51.10 pounds of corn are collected.)

2. Determine the number of square feet the sample occupies.

   $$2 \times 25' \times \frac{38}{12} = 158.3 \text{ square feet.}$$

3. Compute what part of an acre the sample represents.

   $$\frac{158.3 \text{ sq. ft.}}{43560 \text{ sq. ft./acre}} = .00364 \text{ acres.}$$

4. Calculate the yield per acre.

   $$\text{Yield} = \frac{51.1 \text{ lbs.}}{.00364 \text{ acres}}$$

   $$\text{Yield} = 14{,}000 \text{ lbs./acre}$$

Problem:

A circle 2.355 feet or 2 feet 4 1/4 inches in diameter is used to check small areas of wheat yields. The circumference is 7.398 feet or 7 feet 4 3/4 inches. The area of the circle is 4.3560 square feet or 1/10,000 of an acre. Assuming that 12 ounces of wheat is harvested in this circle, what is the estimated yield per acre.

Procedure:

1. Twelve ounces (12) is the yield for 1/10,000 of an acre. Calculate the total yield for one acre.

$$\frac{12 \text{ ounces}}{16 \text{ ounces/pound}} = 0.75 \text{ pounds in } 1/10{,}000 \text{ of an acre.}$$

Yield = 10,000 X 0.75 = 7500 lbs./acre.

2. Sixty pounds of wheat equal one bushel. Calculate the total number of bushels for one acre.

$$\text{Bushels per acre} = \frac{7500 \text{ lbs/acre}}{60 \text{ lbs/bushel}} = \underline{125 \text{ bushels/acre.—Answer.}}$$

DETERMINING THE PERCENT OF ELEMENTS IN FERTILIZERS

Discussion:

Fertilizer is composed of various elements. Each of the elements in a given unit provide the fertilizer with certain characteristics to do a specific job. The percentage of any element in a fertilizer can be calculated if the chemical formula and purity are known. Knowing this will explain what the given fertilizer is composed of and what it is supposed to accomplish.

Problem:

Determine the elements in ammonia sulfate fertilizer with a purity of 99%.

Procedure:

1. Obtain the chemical formula; in this case, it is $(NH^4)^2 \cdot SO^4$

2. Analyze the formula to determine what each unit of ammonium sulfate contains.

   2 units of N (nitrogen)
   8 units of H (hydrogen)
   1 unit of S (sulfur)
   4 units of O (oxygen)

3. Referring to FIGURE 55 determine the atomic weight for each element. Set up a table as follows, listing all elements in the compound, the number of units of each and their atomic weights.

ELEMENT	No. OF UNITS		ATOMIC WEIGHTS		TOTAL OF EACH
Nitrogen	2	X	14.008	=	28.016
Hydrogen	8	X	1.008	=	8.064
Sulfur	1	X	32.066	=	32.066
Oxygen	4	X	16.000	=	64.000
			TOTAL	...	132.146

Thus, in every 132.146 pounds of chemically pure ammonium sulfate, there are 28.016 pounds of elemental nitrogen, 8.064 pounds of elemental hydrogen, 32.066 pounds of elemental sulfur and 64.000 pounds of elemental oxygen.

ELEMENT	SYMBOL	ATOMIC WEIGHT
Aluminum	Al	26.89
Boron	B	10.82
Calcium	Ca	40.08
Carbon	C	12.001
Chlorine	Cl	35.457
Cobalt	Co	58.94
Copper	Cu	63.54
Fluorine	F	19.00
Hydrogen	H	1.008
Iodine	I	126.91
Iron	Fe	55.85
Magnesium	Mg	24.32
Molybdenum	Mo	95.95
Nickel	Ni	58.71
Nitrogen	N	14.008
Oxygen	O	16.000
Phosphorus	P	30.975
Potassium	K	39.100
Sodium	Na	22.991
Sulfur	S	32.066
Zinc	Zn	65.38

FIGURE 55

ATOMIC WEIGHTS AND SYMBOLS
OF CHEMICAL ELEMENTS USED IN FERTILIZER

4. Determining the percentage of each element in the fertilizers is solved by dividing the total of each element by the total weight of the ammonium sulfate as determined in Procedure 3.

Nitrogen: $\frac{28.016}{132.146} = 21.201\%$

Hydrogen: $\frac{8.064}{132.146} = 6.102\%$

Sulfur: $\frac{32.066}{132.146} = 24.266\%$

Oxygen: $\frac{64.000}{132.146} = 48.431\%$

TOTAL 100.000%

5. The values of N, H, S, and O are for 100% purity. Moisture, dust or any impurity may lower the 100% purity. As is the case with the problem which has a 99% purity. To determine this lower purity, multiply the element percentage by the purity percentage.

$$
\begin{aligned}
N &= 21.201 \times .99 = 20.989\% \\
H &= 6.102 \times .99 = 6.040\% \\
S &= 24.266 \times .99 = 24.021\% \\
O &= 48.431 \times .99 = 47.946\% \\
\hline
& \qquad\qquad\qquad\quad 98.996 = 99\%
\end{aligned}
$$

COMPUTING ACRES IN A FIELD

Discussion:

Agricultural workers are often confronted with determining the number of acres in a field. This could be necessary in determining the total yield figure of a crop in acres or in allocating the amount of acres in a field to plant in specific crops.

There are several ways to determine the acreage in a field. All of the techniques require the length and width of the field in feet to be known.

Problem:

How many acres in a field 1320 feet long and 1980 feet wide?

Procedure:

1. Test the known values:

   L = length in feet (1320)
   W = width in feet (1980)
   A = acre (1 acre = 43560 square feet)

2. Substitute values in the formula and solve for A.

$$A = L \times W \times \frac{1}{43560}$$

$$A = \frac{1320 \times 1980}{43560}$$

$$A = \frac{2613600 \times 1}{43560}$$

$$A = 60 \text{ acres}$$

CALCULATING ACRES PER MILE FOR A GIVEN WIDTH

Discussion:

Tractor speeds are usually calibrated in miles per hour. When the speed of the tractor and the total distance travelled is known, it is relatively easy to determine the number of acres covered for a specific width of land. Knowledge of the number of acres per mile for a specific width of land can be used for several things. They include:

1. Calculating the amount of waste land, a ditch may occupy in a field.
2. Help establish the amount of "overlap" a tractor should have in a field for maximum efficiency.

The formulas for calculating the acres per mile for a given width are:

$$\text{Acres} = \frac{\text{Length in feet} \times \text{width in feet}}{43560}$$

$$\text{Acres per mile} = \frac{5280 \text{ feet}}{43560 \text{ feet}^2} \times \text{width in feet}$$

$$= .121212 \times \text{width in feet}$$

$$= \frac{.121212}{12} \times \text{width in inches}$$

$$= .010101 \times \text{width in inches.}$$

Problem:

Two tractors are travelling 4 miles per hour. One driver has an average lap of 6 inches. The other driver laps 18 inches each time across a field. Not considering turning or stops what is the difference in work done by the two tractors in a 10 hour day?

Procedure:

1. Determine the total mileage driven.

   4 MPH X 10 hours = 40 miles.

2. Determine the difference in overlap between the two tractors.

18 inches − 6 inches = 12 inches.

3. Calculate the amount of acres covered in forty miles for a width of 12 inches.

$$A = \frac{L' \times W'}{101010!}$$

A = 4.844 acres difference.—Answer.

CALCULATING WEIGHT LOSS IN DRIED GRAIN

Discussion:

Fruits, vegetables and grain contain varying degrees of moisture. One technique of preserving these crops for storage is to remove some of this moisture. In developing countries, it is important that a farmer realizes that removal of this moisture is also a removal of weight and sometimes volume.

Problem:

2000 pounds of 25% moisture grain is dried to 15% moisture. What is the new weight of grain and moisture when dried to 15% moisture?

Procedure:

1. Determine the total weight of moisture in the grain.

   2000 X .25 = 500 lbs. of moisture.

If the grain were dried to remove all of the moisture, it would weigh 1500 lbs.

2. The 2000 lbs. of grain is equal to 100% weight or stated differently: 1500 lbs. plus the weight of the moisture is equal to 100% weight.

$$100\% = \frac{1500}{85} \times 100$$

   100% = 1764.7 lbs. weight of grain containing 15% moisture.

3. Determine the amount of moisture weight still present in the grain.

   1764.7 lbs. - 1500 lbs. = 264.7 lbs. moisture.—Answer.

UNIT E—PROBLEMS RELATED TO AGRICULTURAL MACHINERY

PULLEY, GEAR AND SPROCKET SPEEDS

Discussion:

The relation of size and speed of driving and driven gear wheels is the same as those for belt pulleys. In calculating for gears, the diameter of the pitch circle or the number of teeth may be used as necessary.

A worker mechanic should be able to determine quickly and accurately the speed of any shaft or machine and to find the size of a gear or pulley so that the shaft or machine may run at the desired speed. He should master the principles, rules and formulas used as well as know how to employ them.

In any study of pulleys or gears the diameter and the revolutions per minute of both the driving (power) shaft and the driven (tool) shaft are of fundamental importance. Frequently the RPM's on agriculture machinery is expressed in the number of pounds of a product like fertilizer, is being applied per minute. Power may be conveyed from the power shaft to the tool shaft by belts, by gears, or by chains.

It should be understood that the revolution per minute of the tool, or the amount of material being applied, may be changed either by changing revolutions per minute of the driving shaft (as speeding up the engine in a car) or by changing the ratio of the diameters of the pulleys on the power shaft and the tool shaft (as shifting gears in a car).

Problem:

A chain driven jackshaft drives a feed shaft on a fertilizer applicator. Sprockets B, C and D as shown in FIGURE 56 can be changed to adjust the rate of application of fertilizer.

Sprocket A, a six tooth sprocket, is attched to the drive wheel. Sprocket B is an eighteen tooth sprocket and can be exchanged for a nine tooth sprocket on the driven end of the shaft. (Sprockets available for changing C on the drive end of the jackshaft) and D on the feed shaft are as follows:

Two 8 tooth; one each 5, 6, 7, 10 and 11 tooth.

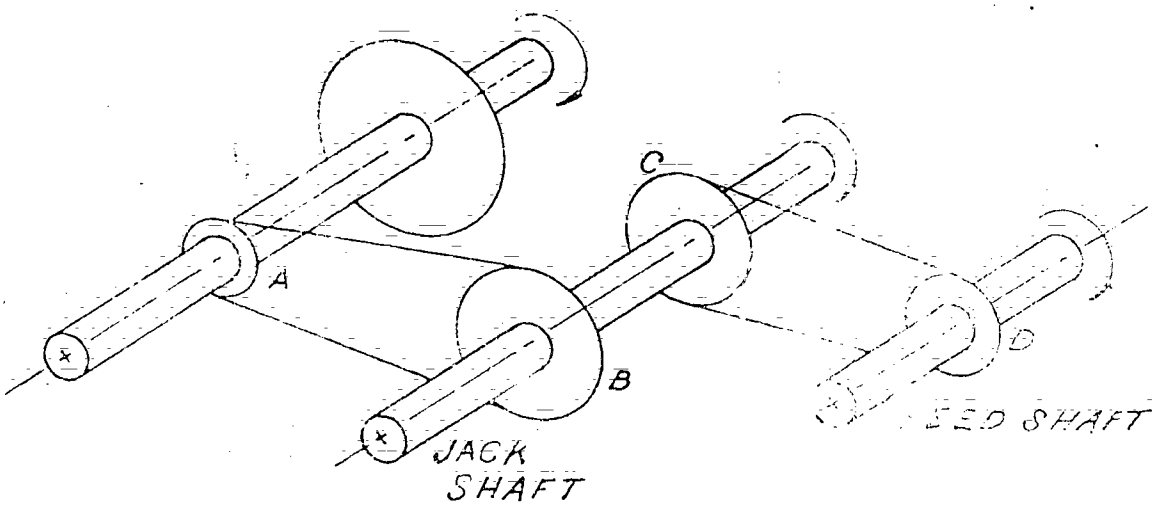

FIGURE 56

The applicator is set up with a six tooth sprocket on A, an eighteen tooth on B, an eleven to on C, and a five tooth on D. The rate being applied, 330 lbs., is 43 lbs. too high. What changes in the drive should be made? The present setting for rate of distribution is 330 lbs. It should be 330 — 43 = 287 lbs. The basic formula for this problem is:

$$\text{Revolution of drive wheel} \times \frac{A}{B} \times \frac{C}{D} = \text{Revolution of Feed Shaft.}$$

Procedure:

1. Determine what percent the speed should be reduced:

   $\frac{43}{330} = 13\%$

2. One revolution of the drive wheel sprocket A, will pass six teeth.

   the jack-shaft will rotate $\frac{6}{18} = \frac{1}{3}$ revolution.

   If the eighteen tooth sprocket is replaced with a nine tooth, the shaft will rotate $\frac{6}{9} = \frac{2}{3}$ revolution. This would double the output of the spreader.

3. Sprocket C, on the driven end of the jackshaft, which has rotated $\frac{1}{3}$ revolution will pass $\frac{11}{3}$ teeth or 3.66 teeth.

The feed shaft will rotate $\frac{3.66}{5}$ or $\frac{11}{3} \times \frac{1}{5} = \frac{11}{5} = .733$ revolution.

4. The new speed should be 13% less.

$100 - 13 = 87\%$ $.733 \times 87 = .638$ revolution, the desired rate.

$$\frac{A}{B} \times \frac{C}{D} = \frac{6}{18} \times \frac{11}{5} = .733 \quad \frac{A}{B} \times \frac{C_2}{D_2} = .638$$

5. Using the closest sprocket ratio available, changing D from 5 to 6 teeth gives $\frac{6}{18} \times \frac{11}{6} = \frac{11}{18} = .612$

$.638 - .612 = .026$ revolution lower than desired:

$\frac{26}{638} = 4.1\%$ low.

6. Changing C from 11 to 10 gives $\frac{6}{18} \times \frac{10}{5} = \frac{2}{3} = .666$

$.666 - .638 = .028$ revolution too high $\frac{28}{638} = 4.4\%$ high.

Note:

These two choices are only one tooth apart. Therefore, they are the smallest change possible. Both are closer than the 15% error of the present setting.

CALCULATING THE AMOUNT OF FIELD WORK A TRACTOR CAN DO

Discussion:

There may be occasions when it will be necessary to estimate how much field work a tractor can do in a given period of time. Such occasions could be while estimating the amount of tractor time desired, finishing a job or in checking the efficiency of tractor work already completed.

Two values must be known to calculate tractor work. They are: the speed the tractor will travel in a given time and the width to be covered. The formula to calculate tractor work is:

$$A = W \times MPH \times \frac{5280}{43560} \times T$$

A = acres/mile
W = width
MPH = miles/hour

5280 feet = 1 mile
43560 square feet = 1 acre
T = time

Problem:

A ten foot disc is pulled by a tractor at 4 miles/hour for ten hours. Allowing 17.5% of the time for losses due to stops, corners, laps and service to the tractor or discs, how many acres of land were worked? What was the rate of work in acres per hour?

Procedure:

1. Determine the total amount of acreage that could be worked in 10 hours.

$$A = W \times MPH \times \frac{5280}{43560} \times T$$

$$A = 10 \times 4 \times \frac{5280}{43560} \times 10$$

$$A = 400 \times \frac{5280}{43560}$$

$$A = 400 \times .121212$$

$$A = 48.4848 \text{ or } 48.48 \text{ acres.}$$

2. Determine the actual amount of acreage worked.

100.00% − 17.5% = 82.5% efficiency
48.48 X 82.5% = 39.999 total acres worked.—Answer.

3. Determine acres per hour rate.

$$\frac{39.999}{10} = 3.99 \text{ acres per hour.—Answer.}$$

CALIBRATING SEED DRILLS

Discussion:

The primary concern in seeding a crop is distributing the correct number of seeds or plants per square foot. There are several methods and techniques that can be used. One such method is to compare the amount of seed collected on a simulated seeding with the figure calculated to be needed. This is a good method and is used in many parts of the world. When this method is used there are conditions which can affect the seeding rate and cause undesirable errors. Usually, these errors are not more than ten percent.

Another variation of this method of calibrating seeding equipment is to collect the material distributed by the machine over a known distance and then compare it with the amount desired.

Problem:

A five foot wide seed drill is powered by an [illegible] inch circumference drive wheel. Sixty pounds of seed per acre should be applied. Is the seed drill properly calibrated to achieve the required rate of seeding?

Procedure:

1. Determine the number of turns the seed drill will have to make to cover an acre.

   43560 sq. ft. = 1 acre.

   $\frac{43560}{5}$ = 8712 feet of travel required to cover 1 acre.

2. Calculate the number of feet the drive wheel will have to travel to deliver 60 lbs. of seed for 1/100 of an acre.

   $\frac{1}{100}$ of 8712 = 87.12 ft.

3. Calculate the amount of seed which should be delivered through the drill in 1/100 of an acre if it is calibrated for 60 pounds per acre.

   $\frac{1}{100}$ of 60 lbs. = .6 lbs.

   .6 X 16 ounces = 9.6 ounces of seed per 87.12 ft.

4. Determine the number of turns the drive wheel will turn to cover 1/100 of an acre.

5. In actual practice, at this point, the seed drill drive wheel would be turned over 12 times. The seeds would be collected, weighed and compared with the desired amount. In this problem, it has already been established that 9.6 ounces of seed are being applied every 11.88 turns of the drive wheel. Thus, the answer to the problem is: Yes, the seed drill is properly calibrated.

$$\frac{9.6 \text{ ozs.}}{11.80 \text{ turns}} \times 100 = \frac{960}{1180} = \frac{60 \text{ lbs}}{1 \text{ acre}}$$

CALCULATING BELT DRIVE RATIOS

Discussion:

Many agricultural implements are belt driven. To find the number of revolutions of a driven pulley in a given time, multiply the diameter of the driving pulley by its number of revolutions in the given time and divide by the diameter of the driven pulley.

Problem:

A new grain drill is not seeding enough grain per acre. Its present rate is 10 to 40 lbs. per acre. It should be seeding 30 to 120 lbs. per acre or approximately three times its present rate.

The belt drive mechanism and pulleys are illustrated in FIGURE 57

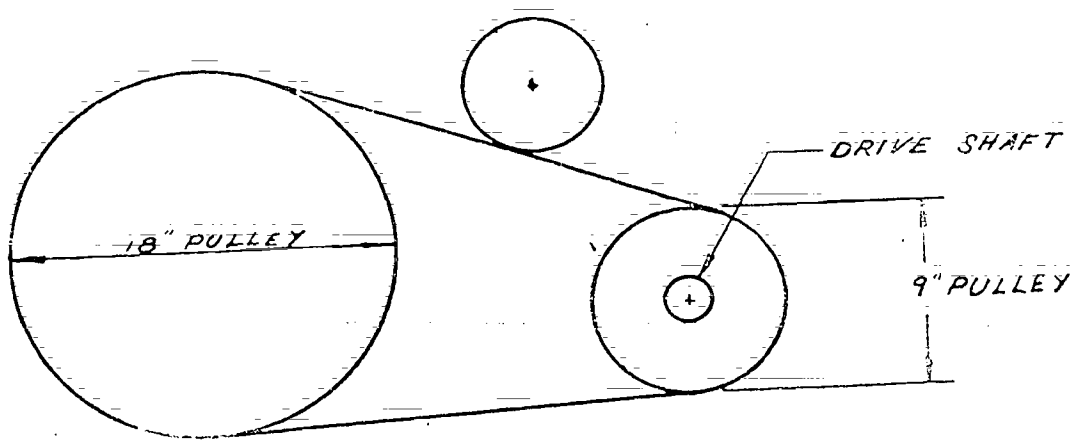

FIGURE 57

The drive pulley on the drill is 18 inches in diameter. The drive shaft has a 9 inch pulley. One revolution of the drive pulley will pass 18" of belt in one revolution.

Procedure:

1. Determine what new speed relationship is required to seed 30-120 lbs. of seed per acre.

$\pi \times 18 \times 1 = \pi 9 \times R^2$

2. Determine the revolutions for R^2 of the 9″ pulley.

$$R^2 = \frac{\pi 18}{\pi 9}$$

R^2 = 2 revolutions or a 1:2 ratio.

3. The new speed must be three times the 1:2 ratio.

4. One of the pulleys has to be increased by 3 times its present size. Since the large pulley is now 18″, a 54 inch pulley would be required if it were to be changed. This would be too large for the drill.

5. Either the 18 inch pulley has to be increased three times to get the proper ratio or the smaller pulley has to be decreased by one-third. Since a fifty-four inch pulley (3 × 18″) would be too large for the drill, a smaller pulley as shown in FIGURE 58 should be used.

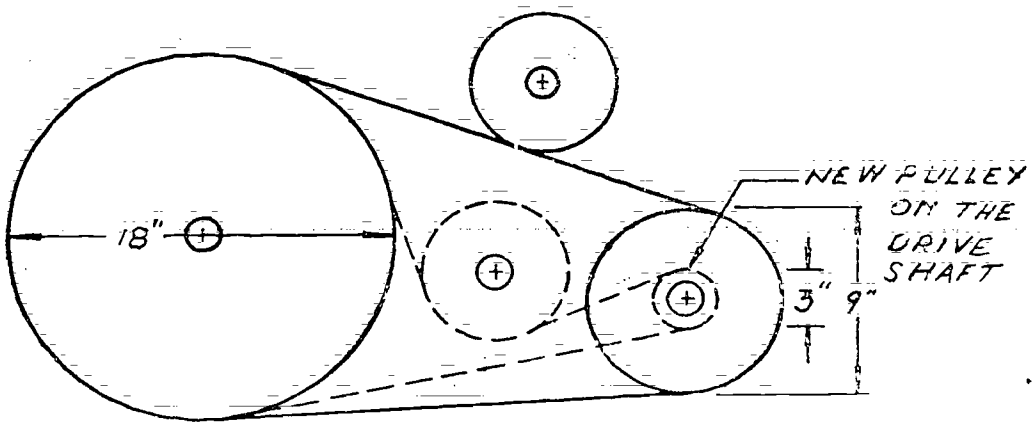

FIGURE 58

Note:

Care must be taken to keep the belt pulleys large enough to have enough drive surface.

DETERMINING HORSEPOWER MOTOR RATING

Discussion:

The term horsepower was first used by James Watt, the inventor of the steam engine. He ascertained that a London draft horse was capable of doing work, for a short time, equivalent to lifting 33,000 lbs., 1 ft. high in 1 minute. This value was used by Watt in expressing the power of his engines and has since been universally adopted in mechanics.

The expression foot/pounds is used to denote a unit of work. It is equivalent to a force of 1 pound, acting through a distance of 1 foot, or a force of 1/2 pound acting through a distance of 2 feet or 1/10 pound through a distance of 10 feet, etc. Horsepower is the measure of the rate at which work is performed. One horsepower is equivalent to 33,000 foot/pounds per minute, or 550 foot/pounds per second.

Therefore, the horsepower of any machine can be found by dividing the number of foot/pounds of work done in 1 minute by 33,000 or

$$HP = \frac{\text{number of foot/pounds of work per minute}}{33{,}000}$$

In electric motors, the formula would be:

$$HP. = \frac{\text{volts} \times \text{amperes}}{746}$$

Problem:

What is the smallest size of electric motor that could:

A. Raise a stone block, weighing 3 tons, to the top of a wall 40 feet high in 2 minutes?

B. Pump 10,000 barrels of water per hour to a height of 15 feet?

Procedure:

A. To raise the stone block.

1. The number of foot/lbs. per min. is $\frac{6000 \times 40}{2}$

2. Substituting values in formula and solve for HP.

$$HP = \frac{6000 \times 40}{2 \times 33{,}000} \qquad HP\ 3\frac{7}{11} \text{ Answer.}$$

B. To Pump Water

1. Tables indicate 1 bbl. = 4.211 cu. ft.
   " " 1 cu. ft. of water weight is 62.5 lbs.

2. Calculate the total number of cu. ft. of water per hour.

   10,000 X 4.211 = 42,110 ft.³/hr.

3. Calculate the total weight of water.

   42,110 X 62.5 = 2,631,875 lbs.

4. Substitute the values in the formula and solve for HP.

$$HP = \frac{2{,}631{,}875 \times 45}{60 \cdot 33{,}000}$$

HP = 59.8 or a 60 HP motor. Answer

CALIBRATING A SPRAYER

Discussion:

Sprayers are usually pulled by a tractor and have a spring loaded by-pass which maintains a constant pressure at the spray tips. The sprayer requires calibration to ensure that the correct amount of liquid is dispensed over a specific distance. To gain accurate results, the tractor motor and ground speed must remain constant. In addition, the tractor must be operated in the same gear as used to set the sprayer's rate of application.

Prior to actual pesticide application, many tractor operators find it a good practice to calibrate the sprayer using water.

Problem:

A farmer wishes to apply a pesticide mix to his crop. The rate of application should be 25 gallons of mix per acre. He will use a tractor with a 20 inch spray trip. What procedures will he have to follow to achieve this rate of application?

Procedure:

1. Select a tractor speed suitable to conditions.
2. Calculate the number of wheel turns the tractor/applicator will revolve in 100 feet.
3. Calculate the number of acres in the 100′ X 20″ test area.

$$L \times W \times \frac{1}{43560} \text{ acres} = 100 \times \frac{20}{12} \times .000023 = .00383 \text{ acres}$$

4. Calculate how much pesticide will be used in the test area if 25 gallons is to be applied per acre.

   25 X .00383 = .09575 gallons will be applied.
   .09575 gallons X 128 ounces per gallon = 12.26 ounces.

5. Pull the sprayer and collect the amount dispensed from one tip for one hundred feet. Compare the amount collected with the amount needed. Make any necessary adjustments to regulate the rate of application.
6. After completing a field, it is wise to check the acres covered with the amount of pesticide dispensed. The formula is:

$$\text{Rate per acre} = \frac{\text{total gallons used}}{\text{total acres covered}}$$

or example:

$$\text{Rate} \quad \frac{303 \text{ gallons used}}{12 \text{ acres covered}}$$

Rate 25 1/4 gallons per acre.

If 25 gallons per acre were the desired rate, the actual application would be one per cent high.

$$25 \times 12 \quad 300$$

$$\frac{3}{300} \quad 1\%$$

Note:

A rapid method for calculating the application rate in ounces from a 20 inch spray tip per 100 feet, is to divide the gallonage per acre by two and subtract 2%.

For Example: At 25 gallons per ac $\frac{25}{2} = 12.5$

$12.5 - (.02(12.5) \quad - .25 = 12.25$ ounces per 100 feet.

UNIT F - PROBLEMS RELATED TO GENERAL AGRICULTURE INFORMATION

THERMOMETERS AND TEMPERATURES

Discussion:

Two kinds of thermometers are in common use. The Fahrenheit, which is used for common purposes, has the freezing point marked 32 degrees, and the boiling point marked 212 degrees. The Centigrade, which is used for scientific purposes, has the freezing point marked 0 degrees and the boiling point marked 100 degrees.

On the Fahrenheit scale, there are 180° (212° – 32°) between the freezing point and the boiling point, whereas on the Centigrade scale, there are 100 degrees in the same space. Hence 180 degrees of the Fahrenheit scale = 100 degrees of the Centigrade scale. These relations are shown in FIGURE 59.

The formulas for converting one scale to the other are:

$$C = \frac{5}{9}(F - 32)$$

$$F = \frac{9}{5}C + 32$$

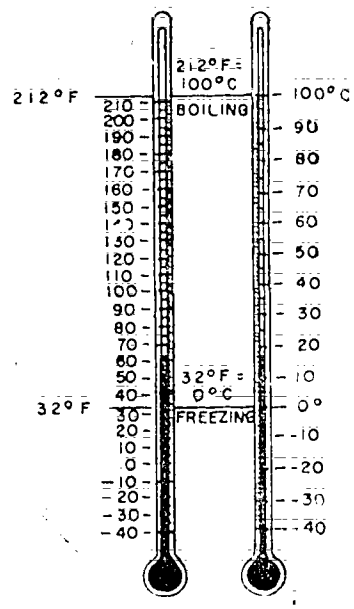

FIGURE 59

Problem:

A temperature of 176 degrees F is recorded. What temperature is this on the Centigrade scale?

Procedure:

1. Select the formula for converting Fahrenheit to Centigrade.

$$C = \frac{5}{9}(F - 32)$$

2. Substitute the values in the formula and solve for C.

$$C = \frac{5}{9}(F - 32)$$

$$C = \frac{5}{9}(176 - 32)$$

C = _____ Answer.

CALCULATING SIMPLE INTEREST

Discussion:

Interest is money that is paid for the use of money. It is usually reckoned at a certain percent rate per year. The base on which the interest is calculated is called the principal. In reckoning interest, time has to be taken into account. The interest on a sum of money for 1 year at a certain rate is the principal multiplied by the rate: for 2 years, it is twice as much; and for any period of time it is the interest for 1 year multiplied by the time in years.

If P stands for Principal, I for Interest, R for percent Rate and T for Time in Years, the interest is found by the formula.

$$I = P \times R \times T$$

Problem:

A farmer borrows $750.00 from a money lender for 2 years and seven months. The money lender is charging 8% interest. How much money will the farmer have to repay?

Procedure:

1. The time is $\frac{31}{12}$ years. (at 30 days to a month for 12 months).

2. Substitute values in formula

$$I = \$750 \times 8\% \times \frac{31}{12}$$

3. Solve for I by cancellation:

$$I = \frac{750 \times 8 \times 31}{100 \times 12}$$

$I = \$155.00$ total interest to be paid.

4. The farmer will repay $905.00 Answer.

($750 principal plus $155 interest).

TABLES

TABLE 1 Summary of Formulas

1. $A = ab$, rectangle, parallelogram
2. $a = A \div b$, rectangle, parallelogram
3. $b = A \div a$, rectangle, parallelogram
4. $A = \frac{1}{2}ab$, triangle
5. $a = 2A \div b$, triangle
6. $b = 2A \div a$, triangle
7. $A = \sqrt{s(s-a)(s-b)(s-c)}$; where $s = \frac{1}{2}(a + b + c)$, triangle
8. $A = \frac{1}{2}(a + b) \times h$; trapezoid
9. $\sqrt{a^2 + b^2}$ right triangle
10. $\sqrt{c^2 - b^2}$; right triangle
11. $b = \sqrt{c^2 - a^2}$; right triangle
12. $r = \frac{(\frac{1}{2}w)^2 + h^2}{2h}$, segment of circle
13. $h = r - \sqrt{r^2 - (\frac{1}{2}w)^2}$, segment of circle
14. $w = 2\sqrt{h(2r - h)}$, segment of circle
15. $C = \pi d$, circle
16. $d = C \div \pi$, circle
17. $C = 2\pi r$, circle
18. $2r = C \div \pi$, circle.
19. $A = \frac{1}{2}Cr$; circle
20. $A = \pi r^2$; circle
21. $A = \frac{1}{4}\pi d^2 = 0.7854\ d^2$; circle

22. $r = \sqrt{\frac{A}{\pi}}$, circle

23. $d = \sqrt{\frac{A}{\frac{1}{4}\pi}}$, circle

24. $A_r = A_1 - A_2 = \pi R^2 - \pi r^2 = \pi(R^2 - r^2) = \pi(R + r)(R - r)$, ring

25. $A = \frac{\theta}{360} \times \pi r^2$, sector

26. $A = \frac{1}{2}$ arc $\times r$, sector

27. $A = \frac{2}{3}hw + \frac{h^3}{2w}$, segment

28. $A = \frac{4h^2}{3}\sqrt{\frac{2r}{h} - 0.608}$, segment

29. $r^2 = \frac{A}{\pi}$

TABLE 2—Useful Numbers

1 cu. ft. of water weighs 62.5 lbs. (approx.) = 1000 oz.
1 gal. of water weighs 8.3 lb. (approx.).
1 atmosphere pressure = 14.7 lb. per sq. in. = 2116 lb. per sq. ft.
1 atmosphere pressure = 760 mm. of mercury
A column of water 2.3 ft. high = a pressure of 1 lb. per sq. in.
1 gal. = 231 cu. in. (by law of Congress).
1 cu. ft. = 7 1/2 gal. (approx.) or, better, 7.48 gal.
1 cu. ft. = 4.5 bu. (approx.).
1 bbl. = 4.211 cu. ft. (small barrel)
1 bu. = 2150.42 cu. in (by law of Congress) = 1.24446—cu. ft.
1 bu. = 5/4 cu. ft. (approx.).
1 perch = 24 3/4 cu. ft. but usually taken 25 cu. ft.
1 in. = 25.4001 mm. (approx.).
1 ft. = 30.4801 cm.
1 m. = 39.37 in. (by law of Congress).
1 lb. (avoirdupois) = 7000 grains (by law of Congress).
1 lb. (troy or apothecaries) = 5760 grains.
1 gram = 15.432 grains.
1 kg. = 2.20462 lb. (avoirdupois).
1 liter = 1.05668 qt. (liquid) = 0.90808 qt. (dry).
1 qt. (liquid) = 946.358 cc. = 0.946358 liter, or cu. dm.
1 qt. (dry) = 1101.228 cc. = 1.101228 liters, or cu. dm.

Pi = 3.14159265358979 . . . = 3.1416 = $\frac{355}{113}$ = 3 1/7 (all approx.)

1 radian = 57° 17′ 44.8″ = 57.29577950 . . .
1° = 0.01745329 (radians)
Base of Napierian logarithms = e = 2.718281828 . . . . .
$\log_{10} e$ = 0.43429448 . . . . . .
$\log_e 10$ = 2.30258509 . . . . . .
1 horsepower-second = 550 ft.-lb.
1 horsepower-minute = (33,000) ft.-lb.

$\sqrt{2}$ = 1.4142136 $\sqrt{3}$ = 1.7320508
$\sqrt{5}$ = 2.2360680 $\sqrt{6}$ = 2.4494897
$\sqrt[3]{2}$ = 1.2599210 $\sqrt[3]{3}$ = 1.4422496

TABLE 3—Weights

Avoirdupois

1 ounce (oz.)		437.5 grains
1 pound (lb.)		16 oz.
1 lb.	=	7000 grains
1 lb.		453.5924 grams
1 short ton		2000 lbs.
1 short ton		907.2 kilograms
1 long ton		2240 lbs.
1 long ton	=	1016 kilograms
1 long ton		1.01605 metric tons
1 metric ton		2204.7 lbs.*
1 metric ton		0.98421 long tons
1 metric ton		1000 kilograms
1 metric ton		36.792 maunds
1 kilogram		2.20462 pounds
1 pound		0.45359 kilogram
1 maund		82.257 pounds
1 maund		37.32421 kilog
100 kilograms (some countries, 100 lbs.)		1 quintal

Troy

1 penny weight		24 grains*
1 oz.		20 penny weight
1 oz.	=	480 grains
1 lb.		12 oz.
1 lb.	=	5760 grains

Apothecaries

1 scruple		20 grains
1 dram	=	3 scruples
1 oz.		8 drams
1 lb.	=	12 oz.

1 grain is the same weight in all three systems of measurement.

TABLE 4—Weights of Substances

Product	Approximate Net Weight In Pounds per Cubic Foot
Apples	40
Barley	40
Brick Work	125
Coal	50
Cobblestone	150
Concrete	150
Corn (ear)	28
Corn (shelled)	47
Cotton (bales)	30
Cotton (seed meal)	40
Cucumber	36
Egg Plant	26
Flint Rock	165
Granite	172
Gravel	100
Gasoline	42
Hay (loose)	4
Hay (bales)	12
Hay (chopped)	10
Ice	58
Limestone (solid)	165
Limestone (ground)	82
Molasses	90
Molasses (in barrels)	48
Oil lubricating	57
Potatoes	48
Potatoes (sweet)	46
Rice (rough)	36
Rice	45
Sand	110
Sand Stone	147
Snow (fresh fallen)	8
Tobacco (in bales)	35
Water (at 70°F.)	62.3
Wheat	[illegible]

TABLE 5—List of Equivalents

1 mile per hour	=	1.467 feet per second
1 mile per hour	=	88 feet per minute
1 mile per hour	=	0.447 meters per second
1 mile	=	26.82 meters per minute
1 foot per minute	=	0.00508 meters per second
1 U.S. gallon per mile	=	2.3521 liters per km.
1 lb. per sq. in.	=	0.0703 kg. per sq. cm.
1 cu. ft. water	=	62.43 weight in lbs.
1 cu. ft. water	=	28.32 weight in kg.
1 B. T. U.	=	0.252 kilocalories
1 U.S. gallon water	=	8.[illegible]3 wt. in lbs.
1 h.p. (U.S.)	=	1.014 metric h.p.
1 h.p. (metric)	=	75 kg. m. per second
1 h.p. (metric)	=	0.7[illegible] kilowatts
1 h.p. (U.S.)	=	550 ft. lbs. per second
1 h.p. (U.S.) hour	=	0.74[illegible] kilowatts=hour

1 inch	=	25.4 millimeters
1 foot	=	0.3048 meters
1 yard	=	0.9144 meters
1 mile	=	1.6093 kilometers
1 knot	=	1.151 miles
1 sq. in.	=	6.4516 sq. cm.
1 sq. ft.	=	0.0929 sq. m.
1 sq. yd.	=	0.8361 sq. m.
1 cu. in.	=	16.387 cu. cm.
1 cu. ft.	=	0.0283 cu. m.
1 cu. in.	=	0.0036 imp. gallons
1 cu. in.	=	0.00433 U.S. gallons
1 cu. ft.	=	6.229 imp. gallons
1 cu. ft.	=	7.481 U.S. gallons
1 cu. ft.	=	28.32 liters
1 imp. gallon	=	1.2001 U.S. gallons
1 imp. gallon	=	4.5460 liters
1 U.S. gallon	=	3.7854 liters
1 U.S. gallon	=	.8327 imp. gallons
1 h.p. U.S.	=	33,000 foot-pounds per min.
1 kilowatt hour	=	1.341 horse-power hours
1 acre foot of water lifted 1 foot	=	1.372 horse-power hours of work.
1 acre foot of water lifted 1 foot	=	1.023 kilowatt hours of work.

TABLE 6—List of Equivalents for Volume [illegible] Units

One Acre Inch	3,630 cubic feet. 27,154 gallons. 1/12 acre foot.
One Acre Foot	43,560 cubic feet. 325,851 gallons.
One Acre Foot of Water	approx. 2,722,500 pounds.
One Acre Foot of Soil	approx. 4,000,000 pounds.
One Cubic Foot	1,728 cubic inches. 7.487 (approx. 7.5) gallons Weight (approx.) 62.4 pounds. (62.39 at 55°F.; 62.30 at 70°F; 62.00 at 100°F).
One Gallon	231 cubic inches. 0.1336 cubic feet, weighs approx. 8.33 pounds.

Rate of Flow Units

One cubic foot per second	448.83 (Approx. 450) gallons per minute 1 acre inch 1 hour and [illegible] seconds (Approx. 1 hour), or 0.992 (Appr[illegible] 1) acre inch per hour. 1 acre foot in 12 hours and 6 minutes (Approx. 12 hours), or 1.984 (Approx. 2 acre feet per day (24 hours).
One Gallon per Minute	= 0.00223 (Approx. 1/450 cubic foot per second.) = 1 acre inch in 452.6 (Approx. 450) hours or 0.00221 acre inch per hour. = 1 acre feet in 2[illegible].3 days or 0.00442 acre foot per day. = 1 inch depth of over 96.3 square feet in 1 hour.
One Million Gallons per Day	= 1.547 cubic feet per second. = 694.4 gallons per minute.

TABLE 7—Flow Over Rectangular Contracted Weirs in Cubic Feet per Second

Head in ft. "H"	Head in inches approx.	Crest length (L) 1.0 foot	1.5 feet	2.0 feet	3.0 feet	4.0 feet	For each additional foot of crest in excess of 4 feet (approx.)
		Flow in cubic feet per second					
0.10	1 3/16	0.105	0.158	0.212	0.319	0.427	0.108
0.11	1 5/16	0.121	0.182	0.244	0.367	0.491	0.124
0.12	1 7/16	0.137	0.207	0.277	0.418	0.559	0.141
0.13	1 9/16	0.155	0.233	0.312	0.470	0.629	0.159
0.14	1 11/16	0.172	0.260	0.348	0.524	0.701	0.177
0.15	1 13/16	0.191	0.288	0.385	0.581	0.776	0.196
0.16	1 15/16	0.210	0.316	0.423	0.638	0.854	0.216
0.17	2 1/16	0.229	0.346	0.463	0.698	0.934	0.236
0.18	2 3/16	0.249	0.376	0.504	0.760	1.02	0.257
0.19	2 1/4	0.270	0.407	0.546	0.823	1.10	0.278
0.20	2 3/8	0.291	0.439	0.588	0.887	1.19	0.303
0.21	2 1/2	0.312	0.472	0.632	0.954	1.28	0.326
0.22	2 5/8	0.335	0.505	0.677	1.02	1.37	0.35
0.23	2 3/4	0.358	0.539	0.723	1.09	1.46	0.37
0.24	2 7/8	0.380	0.574	0.769	1.16	1.55	0.39
0.25	3	0.404	0.609	0.817	1.23	1.65	0.42
0.26	3 1/8	0.428	0.646	0.865	1.31	1.75	0.44
0.27	3 1/4	0.452	0.682	0.914	1.38	1.85	0.47
0.28	3 3/8	0.477	0.720	0.965	1.46	1.95	0.49
0.29	3 1/2	0.502	0.758	1.02	1.53	2.05	0.52

TABLE 7 (Continued)—Flow over Rectangular Contracted Weirs in [illegible] per Second

[illegible]	Head in inches approx.	Crest Length (L) 1.0 foot	1.5 feet	2.0 [illegible]	3.0 feet	4.0 feet	For each additional foot of crest in excess of 4 feet (approx.)
		Flow in cubic feet per second					
0.30	3 5/8	0.527	0.796	1.07	1.61	2.16	0.55
0.31	3 3/4	0.553	0.836	1.12	1.69	2.26	0.57
0.32	3 13/16	0.580	0.876	1.18	1.77	2.37	0.60
0.33	3 [illegible]/16	0.606	0.916	1.23	1.86	2.48	0.62
0.34	4 [illegible]/16	0.634	0.957	1.28	1.94	2.60	0.66
0.35	4 3/16	0.661	0.999	1.34	2.03	2.71	0.69
0.36	4 5/16	0.689	1.04	1.40	2.11	2.82	0.71
0.37	4 7/16	0.717	1.08	1.45	2.20	2.94	0.74
0.38	4 9/16	0.745	1.13	1.51	2.28	3.06	0.78
0.39	4 11/16	0.774	1.17	1.57	2.37	3.18	0.81
0.40	4 13/16	0.804	1.21	1.63	2.46	3.30	0.84
0.41	4 15/16	0.833	1.26	1.69	2.55	3.42	0.87
0.42	5 1/16	0.863	1.30	1.75	2.65	3.54	0.89
0.43	5 3/16	0.893	1.35	1.81	2.74	3.67	0.93
0.44	5 1/4	0.924	1.40	1.88	2.83	3.80	0.97
0.45	5 3/8	0.955	1.44	1.94	2.93	3.93	1.00
0.46	5 1/2	0.986	1.49	2.00	3.03	4.05	1.02
0.47	5 5/8	1.02	1.54	2.07	3.12	4.18	1.06
0.48	5 3/4	1.05	1.59	2.13	3.22	4.32	1.10
0.49	5 7/8	1.08	1.64	2.20	3.32	4.45	1.13

TABLE 7 (Continued)—Flow over Rectangular Contracted Weirs in Cubic Feet per Second

Head in feet "H"	Head in inches approx.	Crest Length (L) 1.0 foot	1.5 feet	2.0 feet	3.0 feet	4.0 feet	For each additional foot of crest in excess of 4 feet (approx.)
		Flow in cubic feet per second					
0.50	6	1.11	[illegible]	2.26	3.42	4.58	1.16
0.51	6 1/8	1.15	[illegible]	2.33	3.52	4.72	1.20
0.52	6 1/4	1.18	[illegible]	2.40	3.62	4.86	1.24
0.53	6 3/8	1.21	1.84	2.46	3.73	4.99	1.26
0.54	6 1/2	1.25	1.89	2.52	3.83	5.13	1.30
0.55	6 5/8	1.28	1.94	2.63	3.94	5.27	1.33
0.56	6 3/4	1.31	1.99	2.67	4.04	5.42	1.38
0.57	6 13/16	1.35	2.04	2.72	4.15	5.56	1.41
0.58	6 15/16	1.38	2.09	2.81	[illegible]	5.70	1.44
0.59	7 1/16	1.42	2.15	2.88	4.36	5.85	1.49
0.60	7 3/16	1.45	2.20	2.96	4.47	6.00	1.53
0.61	7 5/16	1.49	2.25	3.03	4.59	[illegible]	1.55
0.62	7 7/16	1.52	2.31	3.10	4.69	6.29	1.60
0.63	7 9/16	1.56	2.36	3.17	4.81	6.44	1.63
0.64	7 11/16	1.60	[illegible]	3.23	4.92	[illegible]	1.67
0.65	7 13/16	1.63	[illegible]	3.33	5.03	[illegible]	1.72
0.66	7 15/16	1.67	[illegible]	3.40	5.13	6.90	1.75
0.67	8 1/16	1.71	2.59	3.47	5.26	7.05	1.79
0.68	8 3/16	1.74	2.64	3.56	5.38	[illegible]	1.83
0.69	8 1/4	1.78	2.70	3.63	5.40	7.36	[illegible]

TABLE 7 (Continued)—Flow over Rectangular Contracted Weirs in Cubic Feet per Second

Head in feet "H"	Head in inches approx.	Crest Length (L) 1.0 foot	1.5 feet	2.0 feet	3.0 feet	4.0 feet	For each additional foot of crest in excess of 4 feet. (approx).
		Flow in cubic feet per second					
0.70	8 3/8	1.82	2.76	3.71	5.61	7.52	1.91
0.71	8 1/2	1.86	2.81	3.78	5.73	7.68	1.95
0.72	8 5/8	1.90	2.87	3.86	5.85	7.84	1.99
0.73	8 3/4	1.93	2.93	3.94	5.97	8.00	2.03
0.74	8 7/8	1.97	2.99	4.02	6.09	8.17	2.08
0.75	9	2.01	3.05	4.10	6.21	8.33	2.12
0.76	9 1/8	2.05	3.11	4.18	6.33	8.49	2.16
0.77	9 1/4	2.09	3.17	4.26	6.45	8.66	2.21
0.78	9 3/8	2.13	3.23	4.34	6.58	8.82	2.24
0.79	9 1/2	2.17	3.29	4.42	6.70	8.99	2.29
0.80	9 5/8	2.21	3.35	4.51	6.83	9.16	2.33
0.81	9 3/4	2.25	3.41	4.59	6.95	9.33	2.38
0.82	9 13/16	2.29	3.47	4.67	7.08	9.50	2.42
0.83	9 15/16	2.33	3.54	4.75	7.21	9.67	2.46
0.84	10 1/16	2.37	3.60	4.84	7.33	9.84	2.51
0.85	10 3/16	2.41	3.66	4.92	7.46	10.01	2.55
0.86	10 5/16	2.46	3.72	5.01	7.59	10.19	2.60
0.87	10 7/16	2.50	3.79	5.10	7.72	10.36	2.64
0.88	10 9/16	2.54	3.85	5.18	7.85	10.54	2.69
0.89	10 11/16	2.58	3.92	5.27	7.99	10.71	2.72

TABLE 7 (Continued)—Flow over Rectangular Contracted Weirs in Cubic Feet per Second

Head in feet "H"	Head in inches approx.	Crest Length (L) 1.0 foot	1.5 feet	2.0 feet	3.0 feet	4.0 feet	For each additional foot of crest in excess of 4 feet. (approx.)
		Flow in cubic feet per second					
0.90	10 13/16	2.62	3.98	5.35	8.12	10.89	2.77
0.91	10 15/16	2.67	4.05	5.44	8.25	11.07	2.82
0.92	11 1/16	2.71	4.11	5.53	8.38	11.25	2.87
0.93	11 3/16	2.75	4.18	5.62	8.52	11.43	2.91
0.94	11 1/4	2.79	4.24	5.71	8.65	11.61	2.96
0.95	11 3/8	2.84	4.31	5.80	8.79	11.79	3.00
0.96	11 1/2	2.88	4.37	5.89	8.93	11.98	3.05
0.97	11 5/8	2.93	4.44	5.98	9.06	12.16	3.10
0.98	11 3/4	2.97	4.51	6.07	9.20	12.34	3.14
0.99	11 7/8	3.01	4.57	6.15	9.34	12.53	3.19
1.00	12	3.06	4.64	6.25	9.48	12.72	3.24
1.01	12 1/8	....	4.71	6.34	9.62	12.91	3.29
1.02	12 1/4	....	4.78	6.43	9.76	13.10	3.34
1.03	12 3/8	....	4.85	6.52	9.90	13.28	3.38
1.04	12 1/2	....	4.92	6.62	10.04	13.47	3.43
1.05	12 5/8	....	4.98	6.71	10.18	13.66	3.48
1.06	12 3/4	....	5.05	6.80	10.32	13.85	3.53
1.07	12 13/16	....	5.12	6.90	10.46	14.04	3.58
1.08	12 15/16	....	5.20	6.99	10.61	14.24	3.63
1.09	13 1/16	....	5.26	7.09	10.75	14.43	3.68

TABLE 7 (Continued)—Flow over Rectangular Contracted Weirs in Cubic Feet per Second

Head in feet "H"	Head in inches approx.	Crest Length (L) 1.0 foot	1.5 feet	2.0 feet	3.0 feet	4.0 feet	For each additional foot of crest in excess of 4 feet. (approx.)
		Flow in cubic feet per second					
1.10	13 3/16	....	5.34	7.19	10.90	14.64	3.74
1.11	13 5/16	....	5.41	7.28	11.04	14.83	3.49
1.12	13 7/16	....	5.48	7.38	11.19	15.03	3.84
1.13	13 9/16	....	5.55	7.47	11.34	15.22	3.88
1.14	13 11/16	....	5.62	7.57	11.48	15.42	3.94
1.15	13 13/16	....	5.69	7.66	11.64	15.62	3.98
1.16	13 15/16	....	5.77	7.76	11.79	15.82	4.03
1.17	14 1/16	....	5.84	7.86	11.94	16.02	4.08
1.18	14 3/16	....	5.91	7.96	12.09	16.23	4.14
1.19	14 1/4	....	5.98	8.06	12.24	16.43	4.19
1.20	14 3/8	....	6.06	8.16	12.39	16.63	4.24
1.21	14 1/2	....	6.13	8.26	12.54	16.83	4.29
1.22	14 5/8	....	6.20	8.35	12.69	17.03	4.34
1.23	14 3/4	....	6.28	8.46	12.58	17.25	4.40
1.24	14 7/8	....	6.35	8.56	12.99	17.45	4.46
1.25	15	....	6.43	8.66	13.14	17.65	4.51
1.26	15 1/8	....	....	....	13.30	17.87	4.57
1.27	15 1/4	....	....	....	13.45	18.07	4.62
1.28	15 5/8	....	....	....	13.61	18.28	4.67
1.29	15 1/2	....	....	....	13.77	18.50	4.73

TABLE 7 (Continued)—Flow over Rectangular Contracted Weirs in Cubic Feet per Second

Head in feet "H"	Head in inches approx.	Crest Length (L) 1.0 foot	1.5 feet	2.0 feet	3.0 feet	4.0 feet	For each additional foot of crest in excess of 4 feet (approx.)
		Flow in cubic feet per second					
1.30	15 5/8	....	....	....	13.93	18.71	4.78
1.31	15 3/4	....	....	....	14.09	18.92	4.82
1.32	15 12/16	....	....	....	14.24	19.12	4.88
1.33	15 15/16	....	....	....	14.40	19.34	4.94
1.34	16 1/16	....	....	....	14.56	19.55	4.99
1.35	16 3/16	....	....	....	14.72	19.77	5.05
1.36	16 5/16	....	....	....	14.88	19.98	5.10
1.37	16 7/16	....	....	....	15.04	20.20	5.16
1.38	16 9/16	....	....	....	15.20	20.42	5.22
1.39	16 11/16	....	....	....	15.36	20.64	5.28
1.40	16 13/16	....	....	....	15.53	20.86	5.33
1.41	16 15/16	....	....	....	15.69	21.08	5.39
1.42	17 1/16	....	....	....	15.85	21.29	5.44
1.43	17 3/16	....	....	....	16.02	21.52	5.50
1.44	17 1/4	....	....	....	16.19	21.74	5.55
1.45	17 3/8	....	....	....	16.34	21.96	5.62
1.46	17 1/2	....	....	....	16.51	22.18	5.67
1.47	17 5/8	....	....	....	16.68	22.41	5.73
1.48	17 3/4	....	....	....	16.85	22.64	5.79
1.49	17 7/8	....	....	....	17.01	22.85	5.84
1.50	18	....	....	....	17.17	23.08	5.91

TABLE 8—Flow over 90° V Notch Weir in Cubic Feet per Second and Gallons per Minute

Head in feet "H"	Head in inches (approximate)	Flow in cubic feet per second	Flow in gallons per minute
0.10	1 3/16	0.008	3.6
0.11	1 5/16	0.010	4.5
0.12	1 7/16	0.012	5.4
0.13	1 9/16	0.016	7.2
0.14	1 11/16	0.019	8.5
0.15	1 13/16	0.022	9.9
0.16	1 15/16	0.026	11.7
0.17	2 1/16	0.031	13.9
0.18	2 3/16	0.035	15.7
0.19	2 1/4	0.040	18.0
0.20	2 3/8	0.046	20.6
0.21	2 1/2	0.052	23.3
0.22	2 5/8	0.058	26.0
0.23	2 3/4	0.065	29.2
0.24	2 7/8	0.072	32.3
0.25	3	0.080	35.9
0.26	3 1/8	0.088	39.5
0.27	3 1/4	0.096	43.1
0.28	3 3/8	0.106	47.6
0.29	3 1/2	0.115	51.6
0.30	3 5/8	0.125	56.1
0.31	3 3/4	0.136	61.0
0.32	3 13/16	0.147	66.0
0.33	3 15/16	0.159	71.4
0.34	4 1/16	0.171	76.7
0.35	4 3/16	0.184	82.6
0.36	4 5/16	0.197	88.4
0.37	4 7/16	0.211	94.7
0.38	4 9/16	0.226	101.0
0.39	4 11/16	0.240	108.0

TABLE 8 (Continued)—Flow over 90° V Notch Weir in Cubic Feet per Second and Gallons per Minute

Head in feet "H"	Head in inches (approximate)	Flow in cubic feet per second	Flow in gallons per minute
0.40	4 13/16	0.256	115
0.41	4 15/16	0.272	122
0.42	5 1/16	0.289	130
0.43	5 3/16	0.306	137
0.44	5 1/4	0.324	145
0.45	5 3/8	0.343	154
0.46	5 1/2	0.362	162
0.47	5 5/8	0.382	171
0.48	5 3/4	0.403	181
0.49	5 7/8	0.424	190
0.50	6	0.445	200
0.51	6 1/8	0.468	210
0.52	6 1/4	0.491	220
0.53	6 3/8	0.515	231
0.54	6 1/2	0.539	242
0.55	6 5/8	0.564	253
0.56	6 3/4	0.590	265
0.57	6 13/16	0.617	277
0.58	6 15/16	0.644	289
0.59	7 1/16	0.672	302
0.60	7 3/16	0.700	314
0.61	7 5/16	0.730	328
0.62	7 7/16	0.760	341
0.63	7 9/16	0.790	355
0.64	7 11/16	0.822	369
0.65	7 13/16	0.854	383
0.66	7 15/16	0.887	398
0.67	8 1/16	0.921	413
0.68	8 3/16	0.955	429
0.69	8 1/4	0.991	445

TABLE 8 (Continued)—Flow over 90° V Notch Weir in Cubic Feet per Second and Gallons per Minute

Head in feet "H"	Head in inches (approximate)	Flow in Cubic feet per second	Flow in gallons per minute
0.70	8 3/8	1.03	462
0.71	8 1/2	1.06	476
0.72	8 5/8	1.10	494
0.73	8 3/4	1.14	512
0.74	8 7/8	1.18	530
0.75	9	1.22	548
0.76	9 1/8	1.26	566
0.77	9 1/4	1.30	583
0.78	9 3/8	1.34	601
0.79	9 1/2	1.39	624
0.80	9 5/8	1.43	642
0.81	9 3/4	1.48	664
0.82	9 13/16	1.52	682
0.83	9 15/16	1.57	705
0.84	10 1/16	1.61	723
0.85	10 3/16	1.66	745
0.86	10 5/16	1.71	767
0.87	10 7/16	1.76	790
0.88	10 9/16	1.81	812
0.89	10 11/16	1.86	835
0.90	10 13/16	1.92	862
0.91	10 15/16	1.97	884
0.92	11 1/16	2.02	907
0.93	11 3/16	2.08	934
0.94	11 1/4	2.13	956
0.95	11 3/8	2.19	983
0.96	11 1/2	2.25	1,010
0.97	11 5/8	2.31	1,037
0.98	11 3/4	2.37	1,064
0.99	11 7/8	2.43	1,091

TABLE 8 (Continued)—Flow over 90° V Notch Weir in Cubic Feet per Second and Gallons per Minute

Head in feet "H"	Head in inches (approximate)	Flow in cubic feet per second	Flow in gallons per minute
1.00	12	2.49	1,118
1.01	12 1/8	2.55	1,145
1.02	12 1/4	2.61	1,171
1.03	12 3/8	2.68	1,203
1.04	12 1/2	2.74	1,230
1.05	12 5/8	2.81	1,261
1.06	12 3/4	2.87	1,288
1.07	12 13/16	2.94	1,320
1.08	12 15/16	3.01	1,351
1.09	13 1/16	3.08	1,382
1.10	13 3/16	3.15	1,414
1.11	13 5/16	3.22	1,445
1.12	13 7/16	3.30	1,481
1.13	13 9/16	3.37	1,513
1.14	13 11/16	3.44	1,544
1.15	13 13/16	3.52	1,580
1.16	13 15/16	3.59	1,611
1.17	14 1/16	3.67	1,647
1.18	14 3/16	3.75	1,683
1.19	14 1/4	3.83	1,719
1.20	14 3/8	3.91	1,755
1.21	14 1/2	3.99	1,791
1.22	14 5/8	4.07	1,827
1.23	14 3/4	4.16	1,867
1.24	14 7/8	4.24	1,903
1.25	15	4.33	1,943

TABLE 9—Linear Measurement

1 inch	=	1000 mills
1 foot	=	12 inches
1 yard	=	3 feet
1 mile	=	5280 feet
1 mile	=	8 furlongs
1 league	=	3 miles
1 nautical mile	=	6080.2 feet
1 surveyor's chain	=	100 links = 66 feet
1 engineer's chain	=	100 feet

TABLE 10—Area Measurement

1 hectare	=	2.471 acres
1 acre	=	0.40468 hectare
1 acre	=	4840 square yards
1 acre	=	43560 square feet
1 acre	=	.001563 square miles
1 square mile	=	640 acres
1 square mile	=	259 hectares
1 square mile	=	2.59 square kilometers
1 square kilometer	=	0.3861 square miles
1 square kilometer	=	100 hectares
1 acre	=	10 square surveyor's chains

TABLE 11—Decimal and Fractional Equivalents of Parts of an Inch

8ths and 16ths		32nds		64ths			
1	.125	1	.03125	1	.015625	33	.515625
3	.250	3	.09375	3	.046875	35	.546875
3	.375	5	.15625	5	.078125	37	.578125
4	.500	7	.21875	7	.109375	39	.609375
5	.625	9	.28125	9	.140625	41	.640625
6	.750	11	.34375	11	.171875	43	.671875
7	.875	13	.40625	12	.203125	45	.703125
16ths		15	.46875	15	.234375	47	.734375
1	.0625	17	.53125	17	.265625	49	.765625
3	.1875	19	.59375	19	.296875	51	.796875
5	.3125	21	.65625	21	.328125	53	.828125
7	.4375	23	.71875	23	.359375	55	.859375
9	.5625	25	.78125	25	.390625	57	.890625
11	.6875	27	.84375	27	.421875	59	.921875
13	.8125	29	.90625	29	.453125	61	.953125
15	.9375	31	.96875	31	.484375	63	.984375

GPO 944-317

Since 1961 when the Peace Corps was created, more than 80,000 U.S. citizens have served as Volunteers in developing countries, living and working among the people of the Third World as colleagues and co-workers. Today 6000 PCVs are involved in programs designed to help strengthen local capacity to address such fundamental concerns as food production, water supply, energy development, nutrition and health education and reforestation.

Loret Miller Ruppe, Director
Everett Alvarez, Jr. Deputy Director
Richard B. Abell, Director, Office of Programming and Training Coordination

Peace Corps overseas offices:

BELIZE
P.O. Box 487
Belize City

BENIN
BP 971
Cotonou

BOTSWANA
P.O. Box 93
Gaborone

CAMEROON
BP 817
Yaounde

CENTRAL AFRICAN REPUBLIC
BP 1080
Bangui

CHILE
Casilla 27-D
Santiago

COSTA RICA
Apartado Postal 1266
San Jose

DOMINICAN REPUBLIC
Apartado Postal 1414
Santo Domingo

EASTERN CARRIBBEAN
Including: Antigua Barbados, Granada, Montserrat, St. Kitts-Nevis, St. Lucia, St. Vincent, Dominica
"Erin Court"
Bishops Court Hill
P.O. Box 696-C
Bridgetown, Barbados

ECUADOR
Casilla 635-A
Quito

FIJI
P.O. Box 1094
Suva

GABON
BP 2098
Libreville

GAMBIA, The
P.O. Box 582
Banjul

GHANA
P.O. Box 5796
Accra (North)

GUATEMALA
6a Avenida 1-46
Zona 2
Guatemala

HONDURAS
Apartado Postal C-51
Tegucigalpa

JAMAICA
9 Musgrove Avenue
Kingston 10

KENYA
P.O. Box 30518
Nairobi

LESOTHO
P.O. Box 554
Maseru

LIBERIA
Box 707
Monrovia

MALAWI
Box 208
Lilongwe

MALAYSIA
177 Jalan Raja Muda
Kuala Lumpur

MALI
BP 85
Bamako

MAURITANIA
BP 222
Nouakchott

MICRONESIA
P.O. Box 336
Saipan, Mariana Islands

MOROCCO
1, Rue Benzerte
Rabat

NEPAL
P.O. Box 613
Kathmandu

NIGER
BP 10537
Niamey

OMAN
P.O. Box 966
Muscat

PAPUA NEW GUINEA
c/o American Embassy
Port Moresby

PARAGUAY
c/o American Embassy
Asuncion

PHILIPPINES
P.O. Box 7013
Manila

RWANDA
c/o American Embassy
Kigali

SENEGAL
BP 254
Dakar

SEYCHELLES
Box 564
Victoria

SIERRA LEONE
Private Mail Bag
Freetown

SOLOMON ISLANDS
P.O. Box 547
Honiara

SWAZILAND
P.O. Box 362
Mbabane

TANZANIA
Box 9123
Dar es Salaam

THAILAND
42 Soi Somprasong 2
Patchburi Road
Bangkok 4

TOGO
BP 3194
Lome

TONGA
BP 147
Nuku'Alofa

TUNISIA
8, Ave. Louis Braille
Tunis

UPPER VOLTA
BP 537-Samandin
Ouagadougou

WESTERN SAMOA
P.O. Box 880
Apia

YEMEN
P.O. Box 1151
Sana'a

ZAIRE
BP 697
Kinshasa