DOCUMENT RESUME

ED 232 057 CE 036 592

TITLE	Staff Development for Vocational Education Teachers at the Mario Umana Harbor School of Science and Technology. Project STEP.
INSTITUTION	Massachusetts Inst. of Tech., Cambridge.
SPONS AGENCY	Massachusetts State Dept. of Education, Boston. Div. of Occupational Education.
PUB DATE	[79]
NOTE	96p.
PUB TYPE	Reports - Descriptive (141)
EDRS PRICE	MF01/PC04 Plus Postage.
DESCRIPTORS	*Curriculum Development; *Faculty Development; Guidelines; *Industrial Arts; *Integrated Curriculum; Science Activities; Science Curriculum; *Science Education; Science Projects; Scientific Concepts; Secondary Education; Shop Curriculum; *Student Projects; Teacher Developed Materials; Technology; Vocational Education; Vocational Education Teachers

ABSTRACT

A staff development project to create closer integration and mutual support between specialized science and technology curricula and vocational education courses is described. Project activities are listed, and a statement of underlying assumptions is provided. A list of guidelines for coordinating shop and academic projects follows. Guidelines are divided into these categories: selecting a project, identifying vocational education/industrial arts skills required by the project, identifying scientific concepts involved in the project, developing a production plan for the project, and carrying out the plan. Five sample units are provided to show how vocational education/industrial arts and science/technology curricula can be integrated. Intended for use as a model to prepare other plans or as a complete plan for producing an item, each sample unit contains a description of the item; a drawing of the finished product; working drawings; a production plan consisting of behavioral objectives, scientific concepts, industrial arts/vocational education skills, and a list of materials; tools and equipment; and the assembly procedure. The five sample units and the technology areas they match are solar collector (environmental protection and medium-range incubator), medical technology, binary system demonstrator (computer science, model rocket, and launch assembly), aviation, and electronic metal locator (electronics). (YLB)

****
* Reproductions supplied by EDRS are the best that can be made *
* from the original document. *
****

ED232057

GREATER BOSTON REGIONAL CENTER

STAFF DEVELOPMENT FOR VOCATIONAL EDUCATION TEACHERS

at the

MARIO UMANA HARBOR SCHOOL OF SCIENCE AND TECHNOLOGY

PROJECT STEP #79-380-105-220-1

A Project Funded by

The Division of Occupational Education, State Department of Education

under Section 135

P.L. 94-382

U.S. DEPARTMENT OF EDUCATION
NATIONAL INSTITUTE OF EDUCATION
EDUCATIONAL RESOURCES INFORMATION CENTER (ERIC)

This document has been reproduced as received from the person or organization originating it
Minor changes have been made to improve reproduction quality

Points of view or opinions stated in this document do not necessarily represent official NIE position or policy

"PERMISSION TO REPRODUCE THIS MATERIAL HAS BEEN GRANTED BY

TO THE EDUCATIONAL RESOURCES INFORMATION CENTER (ERIC)."

In Contract with

Massachusetts Institute of Technology

Secondary Technical Education Project

Project Director: Stanley Russell

CE 036592

I. INTRODUCTION

Massachusetts Institute of Technology, through its Secondary Technical Education Project, contracted with the State Department of Education, Divisior of Occupational Education, to carry out a summer project: "Staff Development for Vocational Education Teachers at the Mario Umana Harbor School of Science and Technology." The objectives of this project were stated in the Proposal as follows:

1. To provide assistance for vocational education teachers in understanding the goals and activities of the science and technology program at the Mario Umana Harbor School of Science and Technology.

2. To develop closer integration and mutual support between the specialized science and technology curriculum and the vocational education courses at this school.

3. To create a more dynamic educational experience for all students at this school, whether their main interest is science and technology or vocational education.

These objectives were derived from an assessment of needs which indicated that in this school whose magnet theme is Science and Technology, there was little, if any, correlation between the magnet theme program and the vocational education/industrial arts programs. That is, the science/technology curricula were mostly academically-oriented, and the vocational education/industrial arts curricula were mostly shop-oriented, and opportunities to connect these two areas were not being developed or exploited.

The project proposed to achieve its objectives by the following procedures:

1. The project will prepare a set of guidelines based upon the curriculum in science and technology for use by vocational education teachers in the school. These guidelines will indicate areas in which vocational courses can be related to five science and technology areas (Aviation, Computer Science, Electronics, Environmental Protection, and Medical Technology) for a more integrated and dynamic educational experience.

2. In each of the five technology areas, the project will develop one model vocational education unit that ties together a technology area with vocational education.

3. The model units and the guidelines will be disseminated among vocational education teachers at the conclusion of the project (at the start of the 1978-1979 school year for classroom use).

4. The project will be of four weeks' duration during July and August, 1978, with exact dates to be determined later.

The project was directed by Dr. Stanley Russell, Director of STEP, who is also the University Coordinator for the collaborative that involves MIT, Massport, and Wentworth Institute with the Mario Umana Harbor School of Science and Technology. The other project members were Domenic G. Amara, Assistant Headmaster at Umana and School Coordinator for the collaborative; Hugo Rizzuto, teacher of Aviation (one of the technology programs); Joseph Zambello, teacher of metalwork at Umana; and Sandra Congleton, secretary and illustrator.

What follows is a description of the activity of this project, a statement of underlying assumptions, a list of guidelines for use by teachers, and five sample units which have been prepared to show how vocational education/industrial arts curricula and science/technology curricula can be integrated in support of the special mission of the Umana School.

II. PROJECT ACTIVITIES

The project began on August 1, 1978, and except for the writing of this report, was finished by August 31, 1978. Staff time was twenty-one working days. Two days had been set aside for visits to other schools, but these visits had to be rescheduled in October because schools were closed during August.

Most of the work was carried out at the Umana School, using an empty classroom as the central location, and the woodworking and metalworking shops to test out ideas and construct models for two of the five sample units. Additional time was spent in the school library, while the typing and copying work was done at MIT. The distribution of time for various activities was approximately as follows:

Week One:

(a) Review of magnet programs in science and technology at Umana (Aviation Technology, Computer Science, Electronics, Environmental Protection, Medical Technology);

(b) Review of vocational education/industrial arts programs at Umana in Woodworking, Metalworking, Graphic Arts, Power and Energy (because the Umana School encompasses grades 7-12, and in view of its unique program, the vocational education/industrial arts label is used here);

(c) Discussion of how vocational education/industrial arts can relate more effectively to science and technology magnet programs.

Week Two:

(a) Continue discussion of effective linkages between vocational education/industrial arts and magnet programs in science and technology;

(b) Search the school library for trade books dealing with science activities and projects, and specialty magazines (see Appendix A). These were used in generating ideas for things to make, and examining styles of writing instructions and preparing illustrations.

(c) Prepare tentative list of samples of devices and/or models that can be made in vocational education/industrial arts programs that relate to science and technology magnet programs.

Week Three:

(a) Finalize list of five sample devices and/or models;

(b) Prepare preliminary plans and drawings for five sample units, and begin construction of two of them;

(c) Test out preliminary plans in shops as may be necessary.

Week Four:

(a) Finish plans for five sample devices and/or models to be created in vocational education programs; finish construction of two items;

(b) Prepare list of guidelines that can be used by teachers to bring about closer integration and mutual support between vocational education and science and technology magnet programs;

(c) Wind-up activities: sample plans and guidelines put into final form and copies made for use next year.

The project staff generally began each day together in a brainstorming kind of activity. At this time, questions were tossed out, ideas were tested, problems were examined, and there was a resulting movement toward the goals of the

project. Very often, this phase was followed by staff members working individually or in pairs preparing drawings, writing, working in the shops. Later on, the entire group would come together again to critique what had been done, and to decide on the next moves.

In this way, the staff was able to integrate the skills and experiences of the different members, with each person being both a learner and a contributor. Decisions were reached by consensus, taking into account the academic levels of students, the equipment and facilities of the shops, the potential usefulness of the items, and cost.

ERIC

III. ASSUMPTIONS

Certain basic assumptions that have been made in developing the concepts and activities of this project are stated below because they set the stage for what followed:

(a) The skills students need for vocational education and industrial arts can be identified:

(b) The skills students need for vocational education and industrial arts can be taught and learned;

(c) Once learned, these skills can be used to create useful objects and models which will help to illustrate scientific concepts, or which can be used to carry out experiments and procedures in science and technology;

(d) Student interest and motivation in shop classes and academic classes will be enhanced if shop activities are used to create items that will be used in science and technology classes.

IV. GUIDELINES

Teachers in both shop and academic classes can identify numerous opportunities for coordinating their instructional efforts. Although the particular shop skills and academic concepts may vary among projects, there are some general guidelines that can apply in all cases. These guidelines will help teachers to develop plans that can be of maximum value to the students in the shops and in the science and technology classes.

Guidelines can be divided into the following categories:

(a) selecting a project;

(b) identifying vocational education/industrial arts skills required by the project;

(c) identifying scientific concepts involved in the project;

(d) developing a production plan for the project;

(e) carrying out the plan.

These categories are listed separately and in more detail in the sections below.

(a) Selecting a project

Vocational education/industrial arts teachers and science/technology teachers can have considerable discretion in selecting projects that will bring their areas of instruction into closer, mutually-supportive relationships. The shop skills can be put to use in planning and making devices or models which will be used for demonstrating some scientific principles or in carrying out experiments. The science/technology curriculum can be used to determine what scientific concepts need to be demonstrated, or what kinds of experimental devices and models are needed in the academic area. In both instances, the teacher must provide students with advice, information, encouragement, and challenges to ensure high-quality outcomes. The only real limitations are

space, skills, safety, equipment, cost and time.

Many ideas for projects can be gleaned from sources readily available, such as textbooks, trade books, and magazines. The school library is an excellent resource for this purpose. The teacher can quickly scan these materials and develop preliminary ideas about students to be involved and the amount of class time required. This is a realistic process, which takes into account factors such as teaching load, student capabilities, and the potential usefulness, in this school, of the many possible projects.

The teachers should feel free to modify or adapt ideas that have been obtained from books and magazines in order to get the best match with the needs and constraints of the local situation. In other words, while it isn't necessary to invent the wheel all over again, it is important to make sure the wheel that will be used is appropriate.

This is a common-sense approach, in which both the academic concepts and the vocational education/industrial arts skills are being defined and refined by reality.

Summary of Guidelines for Selecting a Project

1. The project should require the use of skills previously learned (or at least to which students have been previously exposed).
2. The project should provide opportunities for all students to be involved.
3. The project activities, as well as the finished product, should increase students' understanding of science and technology.
4. The project should lead to further questions and further activities to answer these questions.
5. The project should have intrinsic high-motivation value.
6. The skills and concepts involved should be such that students will have

to stretch themselves, yet not so difficult that students will be unable to succeed.

7. Materials and equipment needed, as well as cost and time required, should be taken into consideration in selecting a project.

8. The goal should be to produce something which is needed and, therefore, will be used in science/technology classes.

9. The most effective way to identify suitable projects is for teachers in vocational education/industrial arts to talk with teachers in science/technology and students in these areas regarding items that would be useful and that could be made by students using the available facilities.

10. The science/technology concepts related to a given project (whether it be a model or a piece of working equipment) can be studied at varying levels of complexity to match the grade levels of the students. For example, seventh and eighth graders can construct a solar collector which they know harnesses the sun's energy, without getting to the depth that eleventh or twelfth graders might get to in physics class or in environmental science.

(b) Identifying vocational education/industrial arts skills required by the project

An analysis of the project should first identify the industrial arts/vocational education areas (e.g., metalwork, woodwork, mechanical drawing) that would be required to produce the item.

The teachers in those areas should then determine what specific skills will be required to produce the item.

It may be necessary to adapt the production method to fit the skills that

have been taught and the equipment and facilities that are available.

(c) Identifying scientific concepts involved in the project

An analysis of the project should first identify the science areas (e.g., Aviation, Medical Technology, Computer Science) that are associated with the project. The teachers in these areas should then determine what specific concepts will be required to produce the item. Textbooks that are being used will be of great value in selecting these concepts and stating them in the most appropriate language for the students involved.

(d) Developing a Production Plan

An integral part of the project is the Production Plan, because it culminates in a finished, functional item and because it is the mechanism for linking together the science/technical/vocational/industrial arts areas.

Although the details of any plan must be tailored to the facility, curriculum, goals, faculty and students of any particular school, the procedure suggested provides an adaptable structure that will insure orderly completion of stated objectives. The Production Plan is outlined by five basic steps:

(1) Conceptual design

(2) Working plan/artist's drawing

(3) Component drawings

(4) Tools and materials identification/sequence of operation

(5) Assembly

(1) Conceptual design

The conceptual design or sketch is the rough drawing from which a detailed working drawing and/or an artist's rendition will be made. Ideally, conceptual design will emanate from students in technical or science classes. It is expected, however, that assistance from the instructor, whether it be motivational or

technical, will be supportive; conceptual design ideas may, for example, originate with the instructor but be further developed by students.

(2) Working plan/artist's drawings

The working drawing can be developed by either the drafting instructor or advanced drafting students, utilizing the conceptual design(s).

Working drawings will be the basis for the artist's rendition, component drawings, tools and materials procurement, and the sequence of operations that will result in a finished product. The artist's conception can be developed by students either as a part of the formal art class or as an extension of the drafting program.

(3) Component drawings

In our plan, the drafting students would be required to make individual component drawings for each part and list on the drawings the materials required to make the component. Completed component drawings will then be given to the appropriate shop instructors for distribution to students who will actually make these components.

(4) Tools and materials identification/sequence of operation

A shop class of students, then, is provided with at least one copy of the working plans and an artist's rendition.

Each shop student or working group is provided with a component drawing listing the materials required for that component, and a student worksheet.

The "student worksheet" is the blueprint for constructing each component. In our sample, the student or group of students would copy the materials list or make any authorized substitution onto the worksheet.

After that, a list of tools and "Sequence of Operations" needed to produce

the component will be prepared by the student(s), subject to the instructor's approval. (For safety and other reasons, the amount of assistance provided by the instructors at this juncture may be substantial.)

(5) Assembly

With the instructor's guidance and approval, the shop students will develop an assembly plan that tells how the components must be put together to make the finished item.

V. SAMPLE UNITS

The guidelines and procedures described above provide a systematic method for closer integration of vocational education/industrial arts skills and science/technology concepts. With this system, five sample units have been prepared that can be used by teachers:

(a) as a complete plan for producing the items;

(b) as a model teachers can use to prepare plans for other items more suited to their particular needs.

The five sample units match the five technology areas in Umana School's curriculum, as follows:

A. Solar Collector -- Environmental Protection

B. Medium-range Incubator -- Medical Technology

C. Binary System Demonstrator -- Computer Science

D. Model Rocket and Launch Assembly -- Aviation

E. Electronic Metal Locator -- Electronics

The project produced two of these items: the Solar Collector and the Binary Demonstrator, and they are now ready for use by teachers.

In the following pages, each sample unit is presented as a package in a distinct color. The first sheet in each set names the item and describes its purpose. This is followed by a drawing showing what the finished product will look like. After this, there are several working drawings showing all dimensions and showing how the parts go together. These drawings also have lists of materials.

The Production Plan comes next and consists of: (1) Behavioral Objectives; (2) Scientific Concepts; (3) Industrial Arts/Vocational Education Skills; (4) List of Materials, Quantities, and Costs (this has only been completed for

the Solar Collector, as an example); (5) Tools and Equipment; and finally, (6) the Assembly Procedure.

Each set is independent of the others, but all have been prepared with the same systematic development.

ERIC

A. SOLAR COLLECTOR

The Solar Collector was designed (and produced) in order to give classes in Environmental Technology a working piece of equipment that can be used for experiments and demonstrations that the teacher can devise. It is a simple, basic item that can be used in almost any conceivable configuration with auxiliary equipment such as pumps, valves, and temperature gauges. It can be incorporated into a larger system as the source of heat, or can be used by itself. The choice is the teacher's and will depend upon class interests, level of technology, and similar factors.

The design of this collector is adapted from several sources, including an article in Mechanics Illustrated for June, 1978 (Vol. 74, No. 601): "A Practical Solar Collector You Can Build" (pp. 43 ff). In consideration of costs, it was decided to use copper tubing soldered to a copper plate, instead of purchasing a collector plate. The original design, as shown on the following page ("Sheet 1 of 4"), called for the tubing to be bent 180 degrees a dozen or more times. When it became apparent that the shop did not have proper equipment for such an operation, the design was changed, as shown in "Sheet 2 of 4". Here, a 50-foot coil of tubing has simply been opened out into two flat spirals bent by hand and then soldered to the plate -- a task that students can easily do. This model is the one which was constructed in the workshop and now belongs to the school.

SOLAR COLLECTOR

SCALE 1:8 (INCHES)

SHEET 1 OF 4

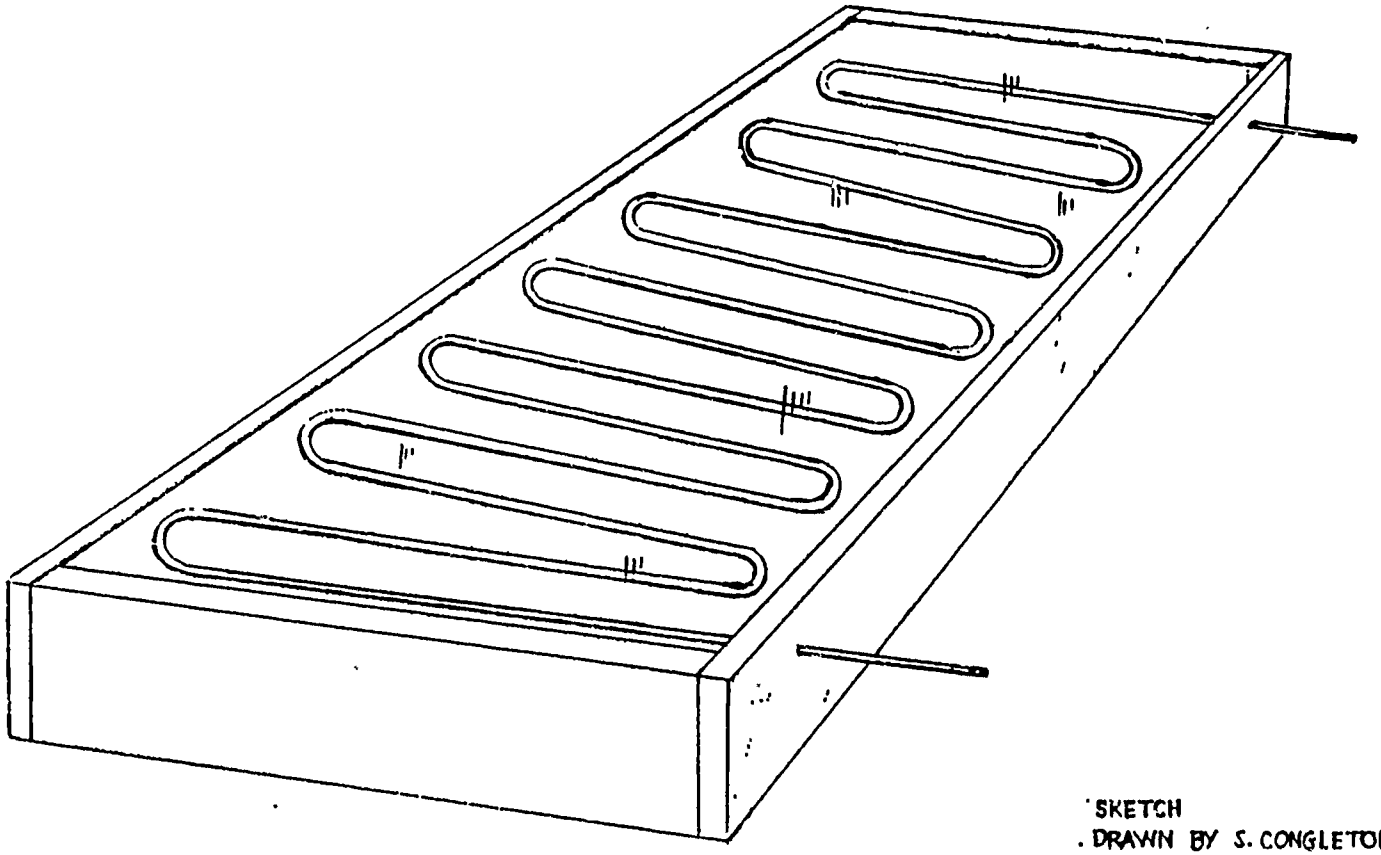

SKETCH
DRAWN BY S. CONGLETON

Mario Umana Harbor School
of Science and Technology

August 11, 1978

Staff Development Project conducted by MIT - 8/78; funded by State Dept. of Ed., Div. of Occup. Ed., under Section 135 of P.L. 94-482, Project STEP #79-380-105-220-1.

SOLAR COLLECTOR

SCALE: 1:6 (INCHES)

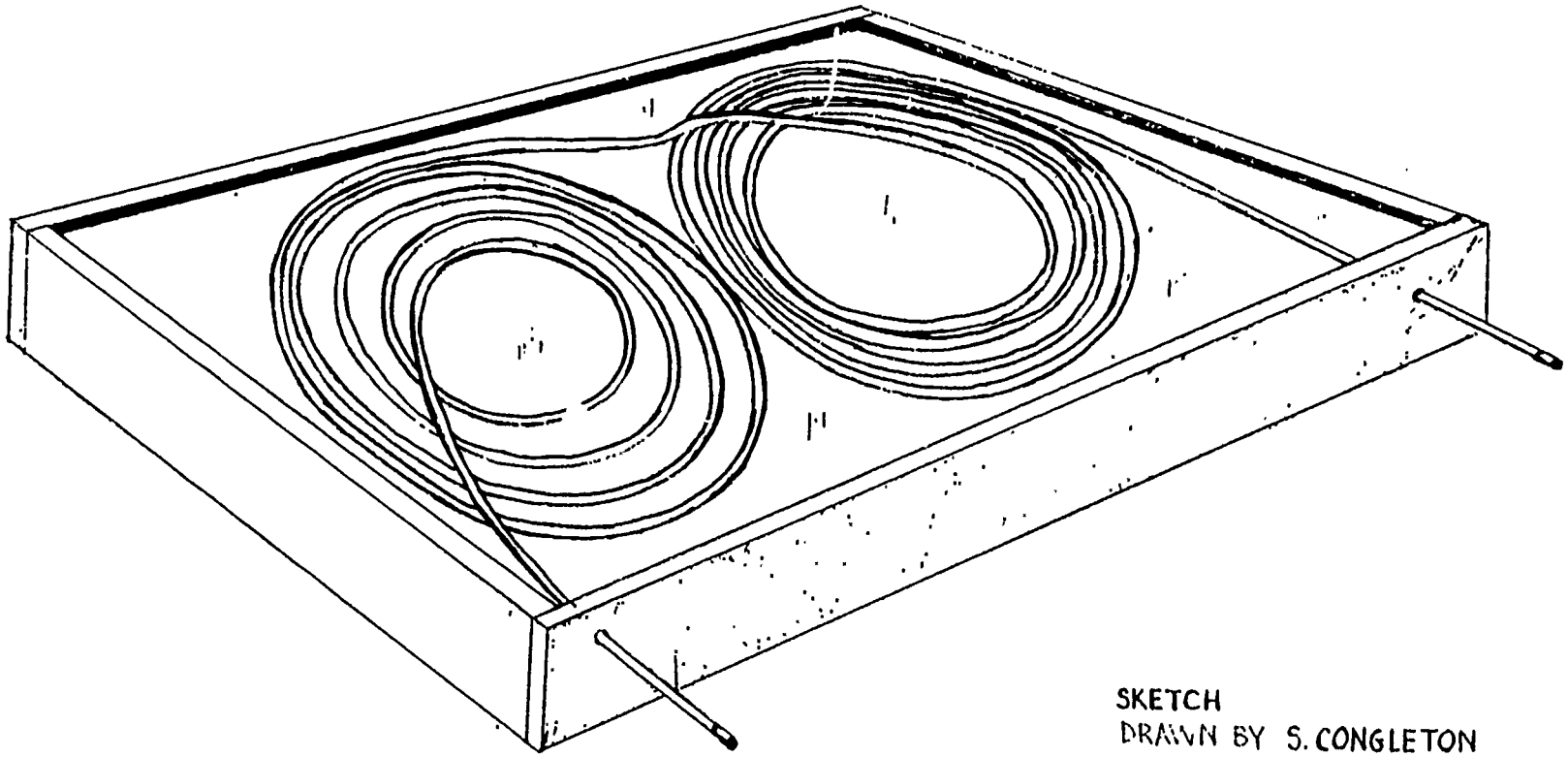

SKETCH

DRAWN BY S. CONGLETON

SHEET 2 OF 4

Mario Umana Harbor School
of Science and Technology

August 15, 1978

Staff Development Project conducted by MIT - 8/78; funded by State Dept. of Ed., Div. of Occup. Ed., under Section 135 of P.L. 94-482, Project STEP #79-380-105-220-1.

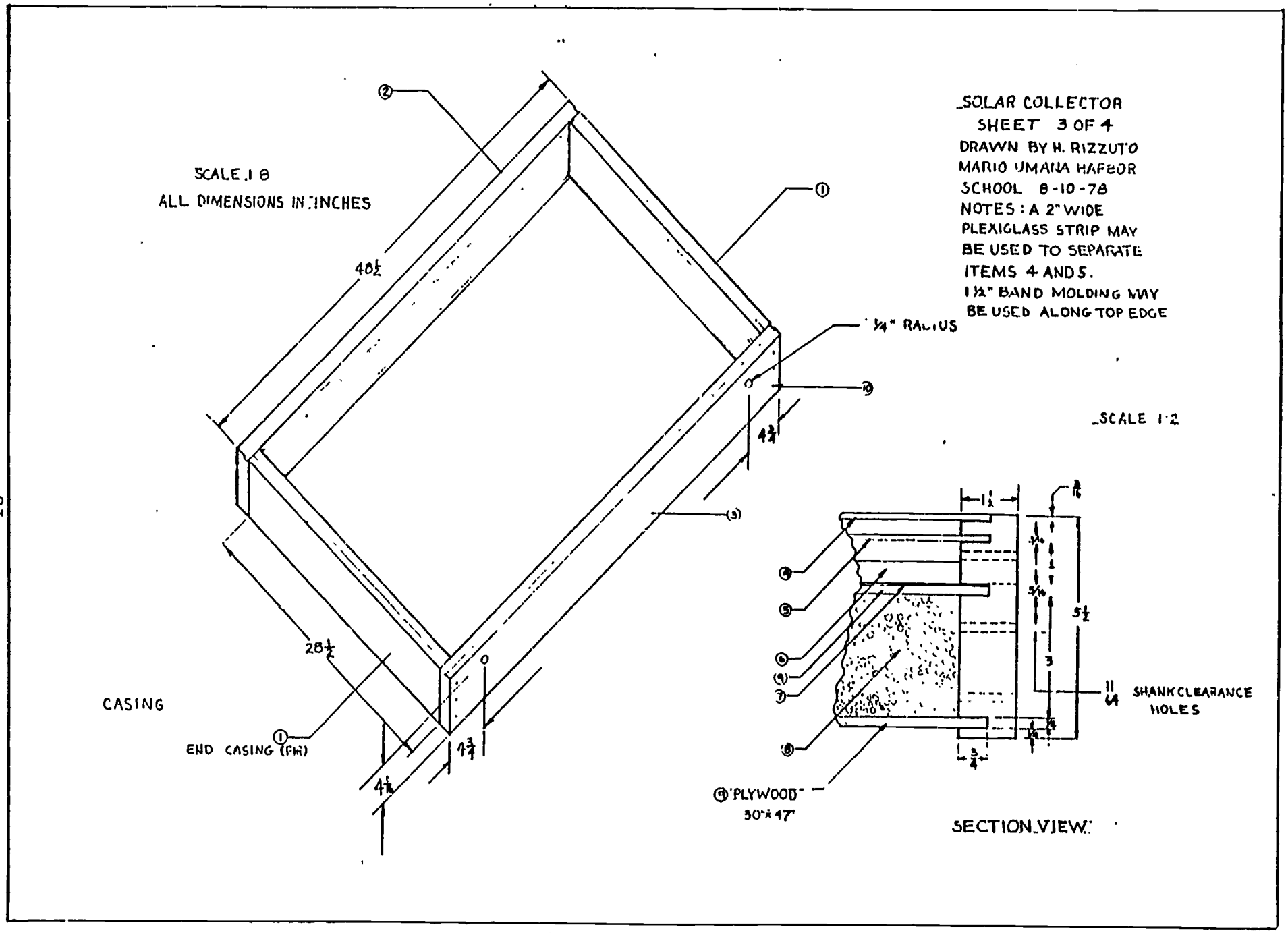

Staff Development Project conducted by MIT - 8/78; funded by State Dept. of Ed., Div. of Occup. Ed., under Section 135 of P.L. 94-482, Project STEP #79-380-105-220-1.

SCALE 1:8

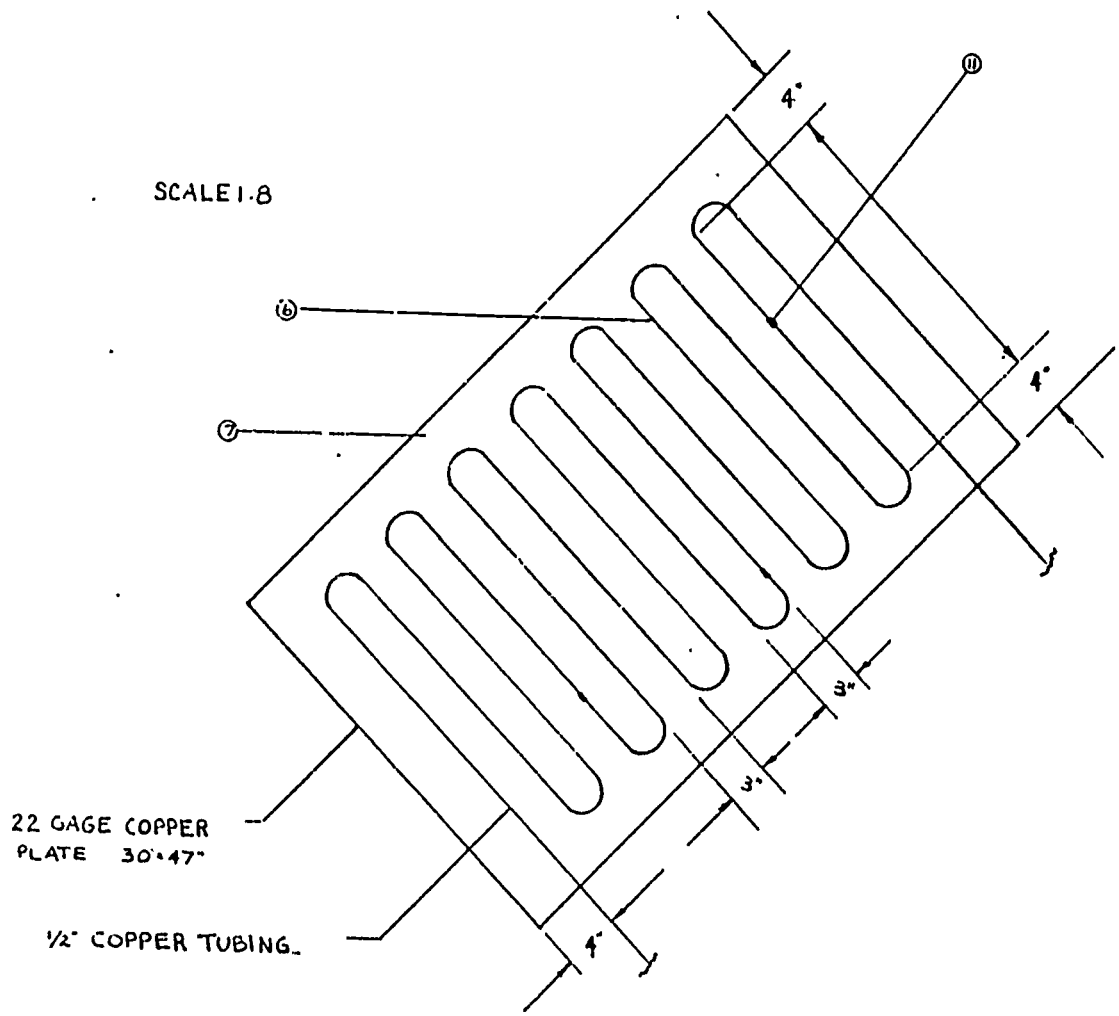

SOLAR COLLECTOR
SHEET 4 OF 4
DRAWN BY H. RIZZUTO
MARIO UMANA HARECR
SCHOOL 8-10-78
NOTE: COPPER TUBING IS SOLDERED ON TO THE COPPER PLATE

NO	COMPONENT PARTS	QTY
1	END CASING - FIR	2
2	SIDE CASING - FIR	1
3	SIDE CASING - FIR	1
4	PLEXIGLASS ⅛" THICK	1
5	GLASS PLATE ⅛" THICK	1
6	COPPER TUBING ½" DIA x 10'	3.5
7	COPPER PLATE 22 GAGE	1
8	INSULATION	1
9	PLYWOOD BASE C-D GRADE	2
10	WOOD SCREWS - 2½ NO 10 ROUNDHEAD GALVANIZED	12
11	CONNECTOR - COPPER	3

Staff Development Project conducted by MIT - 8/78; funded by State Dept. of Ed., Div. of Occup. Ed., under Section 135 of P.L. 94-482, Project STEP #79-380-105-220-1.

PRODUCTION PLAN

Project Title: FLAT PLATE SOLAR COLLECTOR -- WATER TYPE

1. BEHAVIORAL OBJECTIVES

(a) Students will be able to list the forms of energy: nuclear, chemical, mechanical, thermal, electrical, light.

(b) Students will be able to measure temperature in degrees of centigrade and fahrenheit.

(c) Students will be able to demonstrate the thermal properties of air.

(d) Students will be able to use the project to demonstrate heat transfer.

(e) Students will be able to describe heat storage techniques used in connection with a solar collector.

(f) Students will be able to demonstrate the characteristics of insulation materials used in a flat plate solar collector.

(g) Students will be able to apply basic tool skills in the creation of a solar collector.

(h) Selected students with drafting skills will be able to interpret a sketch with dimensions stated and construct working drawings of component parts and the finished product.

(i) Students will be able to read detailed working drawings and work from their drawings to produce components and assemble a final product.

2. SCIENTIFIC CONCEPTS

(a) Energy may be changed from one form to another: heat, light, mechanical, electrical, nuclear.

(b) Energy may be transferred from one location to another: conduction, connection, radiation.

(c) Energy may be stored.

(d) Certain materials are better conductors than others.

(e) Transfer of heat energy may be controlled by "insulating" materials.

(f) Heat is a form of energy. Temperature is a measure of the average kinetic energy of a substance.

(g) Energy cannot be created or destroyed.

ERIC

3. INDUSTRIAL ARTS/VOCATIONAL EDUCATION SKILLS

(a) Metals:

Use of soldering iron.
Use of tube-bending tools.
Use of shears for shearing copper plate.
Use of measurement instruments to tolerance of 1/16".
Use of tube-cutting tools for cutting copper tubing.

(b) Wood:

Use of hand saws.
Use of table-saw.
Use of bench-drill.
Use of hand drill.
Use of dado blades.
Sanding.
Measuring.
Use of hammer.
Use of screwdriver.
Use of mallet.

(c) Other:

Use of glass-cutter.
Use of chalking gun.
Painting.

4. LIST OF MATERIALS, QUANTITIES AND COSTS

Materials	Quantity	Costs
1/4" plywood; C,D grade	2 pcs, 30" x 47"	$13.50
Fir casing, 2" x 8"	13 ft.	$10.00
1/2" copper tubing	50 ft.	$28.00
1/2" plexiglass	31" x 48"	$15.00
window glass, 3/16"	31" x 48"	$7.50
caulking compound	1 pkg.	$3.00
molding	14 ft.	$3.00
insulation	3" x 30" x 47"	$4.28
#10 wood screws 2 1/4"	1 doz.	$1.05
22 gauge copper plate	31" x 48"	$26.00
3/4" brads	1 doz.	$.69
black primer paint	2 cans, 8 oz. each	$5.38
green exterior paint	4 oz.	$1.50
solder	6 oz.	$3.00
flux	1 oz.	$2.00

5. TOOLS AND EQUIPMENT

Hand saw
Table-saw
16 pt. adjustable dado blade
Tri-square
Carpenter's square
Ruler
Drill press
Hand drill
5/64" bit
11/64" bit
1/2" augur bit (#8), plus brace
Sandpaper, 80 grit
Soldering iron
Hammer
Screwdriver
Caulking gun
Paint brush
Plane
Glass-cutter

ERIC

6. ASSEMBLY PROCEDURE -- SOLAR COLLECTOR

1. Measure and lay out length on end and side pieces of casing.
2. Cut each piece of casing to correct length on table saw.
3. Measure and lay out dado cuts for pieces of casing.
4. Set up and test dado blade on table saw, for bottom dado cut.
5. Cut dado for bottom of solar collector on each piece of casing.
6. Repeat procedure 4 and 5 for dados where copper plate and 1/4" plywood support belong.
7. Repeat procedure 4 and 5 for dados where glass plate belongs.
8. Repeat procedure 4 and 5 for dados where plexiglass belongs.
9. Measure and lay out for screw pilot holes, shank clearance holes, and holes where copper tubing will protrude through casing.
10. Drill shank clearance and pilot holes.
11. Bore holes for copper tubing protruding through casing with auger bit.
12. Sandpaper each piece of casing.
13. Assemble the two end pieces and one side of casing (without holes) with screws, and glue before screwing into place.
14. Measure and lay out bottom piece of solar collector (1/4" plywood).
15. Cut bottom of solar collector on table saw.
16. Insert bottom piece into the bottom dado of the three pieces of casing that were assembled in step 13.
17. Repeat steps 14, 15, and 16 for 1/4" plywood which will support copper plate, and insert into dado cut second from the bottom.
18. Insert insulation between bottom and middle plywood pieces.
19. Measure and lay out copper plate.
20. Rub down with steel wool and prepare copper plate for soldering.
21. Cut copper plate to size.
22. Bend 1/2" copper tubing to specified design.

23. Prepare copper tubing for soldering.

24. Solder copper tubing to copper plate.

25. Clean and prepare copper plate and tubing for painting.

26. Slide copper plate into same dado cut as the middle piece of plywood (second dado from bottom).

27. Paint collector plate and inside of casing above the collector plate.

28. Optional -- Place piece of wood on collector plate for support of the glass plate.

29. Slide glass plate into dado cut above collector plate (third cut from bottom).

30. Optional -- Place piece of plexiglass on glass plate for separation and support of plexiglass.

31. Install side piece of casing and secure with screws and glue.

32. Place plexiglass on top dado cut and seal with caulking compound.

33. Measure and lay out molding.

34. Cut molding to size.

35. Secure molding on top of collector with 1 1/2" brads.

36. Paint outside of solar collector.

B. MEDIUM-RANGE INCUBATOR

The Medium-range Incubator is intended for use in the Medical Technology program, the Biology program, or the Environmental Science program. It is a simple and inexpensive piece of equipment that will maintain temperatures from about 20 degrees Centigrade to 50 degrees Centigrade. This range is adequate for many forms of bacterial or mold cultures, and for incubation of avian eggs. It is small enough to fit into convenient spaces that would not accommodate a floor model unit or some of the larger table-top units.

In this model, the temperature control is achieved by adjusting the opening on top of the incubator. However, it would not be difficult to install a thermostat on the heating unit if one wanted more precise temperature control.

A special feature is the side panel, which may be removed so that tubes, wires, or other paraphernalia can be brought into the chamber as part of an experiment or process.

It will be noted that the illustration (Sheet 1 of 2) shows a frame for the plexiglass door, while the drawing (Sheet 2 of 2) shows the plexiglass door unframed, with hinges fastened directly to the plexiglass. Either plan can be followed, depending upon the teacher's preference.

MEDIUM RANGE INCUBATOR

SCALE: 1:8 (INCHES)

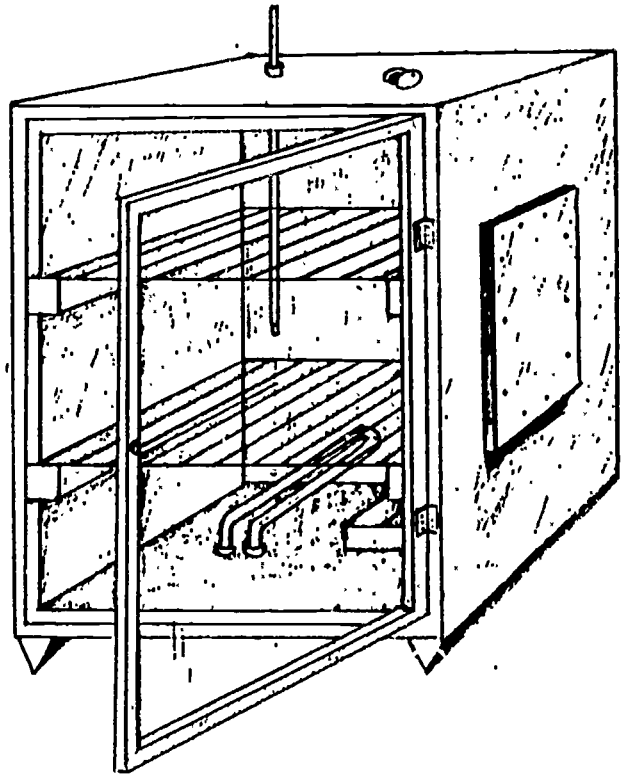

SKETCH
DRAWN BY S. CONGLETON
SHEET 1 OF 2

Mario Umana Harbor School
of Science and Technology

August 11, 1978

Staff Development Project conducted by MIT - 8/78; funded by State Dept. of Ed., Div. of Occup. Ed., under Section 135 of P.L. 94-482, Project STEP # 79-380-105-220-1.

NO	COMPONENT PARTS	QTY
1	TOP - PLYWOOD	1
2	LEFT SIDE - PLYWOOD	1
3	RIGHT SIDE - PLYWOOD	1
4	BOTTOM - PLYWOOD	1
5	BOTTOM INSULATION	1
6	LEFT SIDE INSULATION	1
7	"	1
8	"	1
9	TOP INSULATION	1
10	RIGHT SIDE INSULATION	1
11	"	1
12	"	1
13	SUPPORT BLOCKS - PINE	4
14	RACKS - ¼ METAL RODS	2
15	THERMOMETER	1
16	1¼ DIA. CORK	1
17	½" NO. 6 WOOD SCREW	1
18	2" DIA. METAL DISC	1
19	1" METAL HINGES - SPRING	2
20	3/16" PLEXIGLASS DOOR	1
21	1/16" RUBBER GASKET	1
22	SIDE PLATE - PLYWOOD	1
23	3/16-24 NC × 1½ S. BOLTS	10
24	BACK - PLYWOOD	1
25	6"×10" METAL PAN	1
26	HEATING COIL + PLUG	1
27	LEGS - PINE	2
28	BACK INSULATION	1
29	1¼" NAILS - 4D	20

SCALE 1:4

NOTE: ALL PLYWOOD COMPONENTS ARE GLUED BEFORE NAILING. BACK PIECE IS GLUED AND NAILED WITH 1" BRADS

MEDIUM RANGE INCUBATOR
DRAWN BY H. RIZZUTO
MARIO UMANA HARBOR SCHOOL, AUGUST 10, 1978
SHEET 2 OF 2

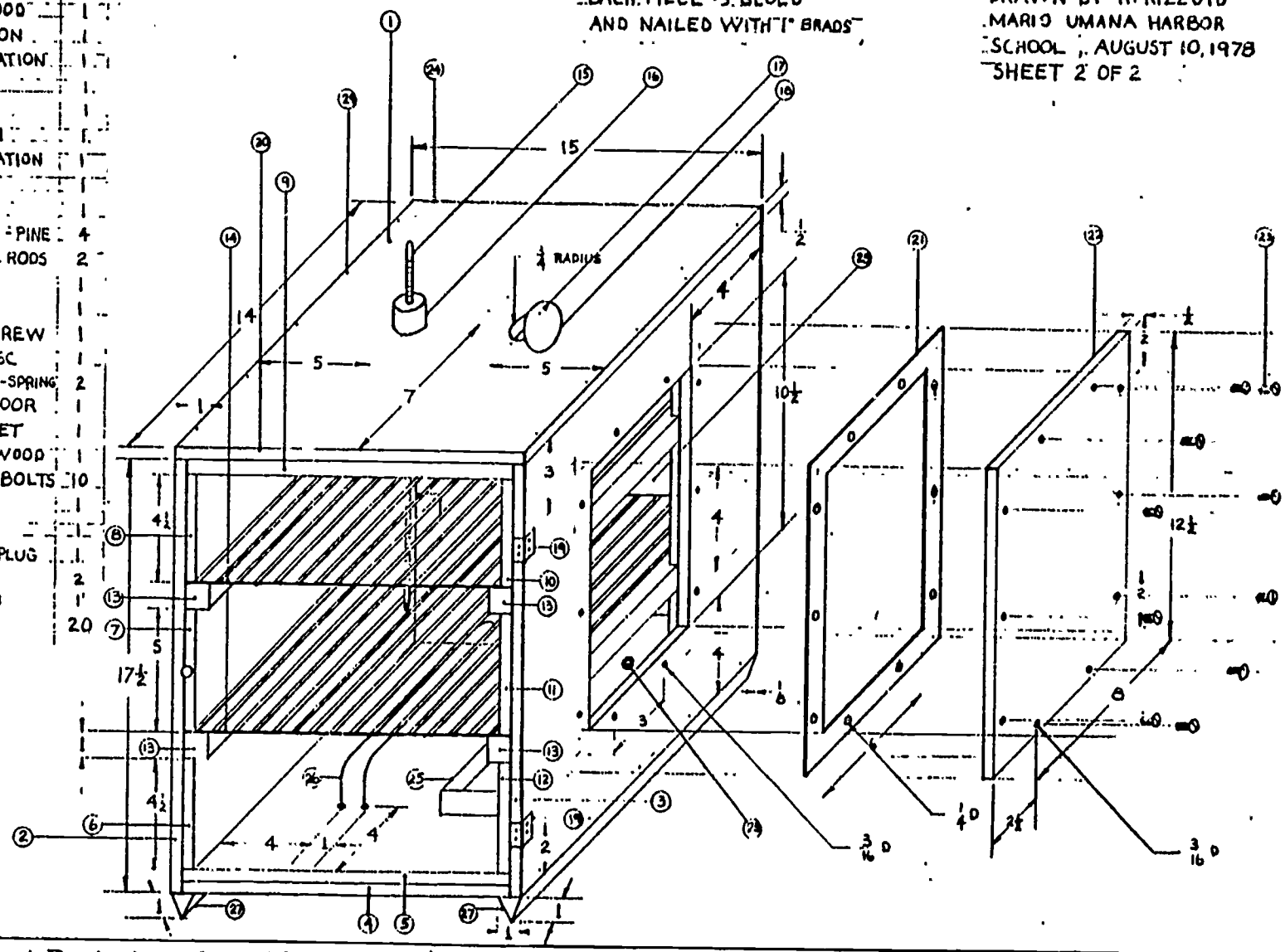

Staff Development Project conducted by MIT - 8/78; funded by State Dept. of Ed., Div. of Occup. Ed., under Section 135 of P.L. 94-482, Project STEP #79-380-105-220-1.

PRODUCTION PLAN

Project Title: MEDIUM-RANGE INCUBATOR

1. BEHAVIORAL OBJECTIVES

(a) Students will be able to demonstrate the regulation of temperature in an incubator.

(b) Students will be able to explain the properties of an insulating material.

(c) Students will be able to explain the value of maintaining a constant temperature environment.

(d) Students will be able to construct a working incubator which can support studies in Medical Technology, Biology, or Environmental Science.

(e) Students will be able to use the incubator for studies in Medical Technology, Biology, or Environmental Science.

2. SCIENTIFIC CONCEPTS

(a) Energy may be transferred from one location to another: conduction, connection, radiation.

(b) Living things have an optimum temperature range in which to carry out their life processes.

(c) Living things have an optimum level of humidity in order to carry out life processes.

(d) Electrical energy can be transformed into heat energy by resistance through a conductor.

(e) Transfer of heat energy may be controlled by use of insulating materials.

ERIC

3. INDUSTRIAL ARTS/VOCATIONAL EDUCATION SKILLS

(a) Metals:

Use of measurement instruments to 1/16".
Bending steel rods.
Cutting steel rod to a tolerance of 1/16".
Welding.
Deburring, filing, polishing.
Cutting copper plate.

(b) Wood:

Measuring to tolerance of 1/16".
Use of hand saw.
Use of table saw.
Use of drill press.
Use of brace and bit.

(c) Other:

Painting.
Cutting glass to size.
Cutting styrofoam insulation to size.
Simple techniques of wiring.
Use of screwdriver.
Sanding.
Cutting with scissors.

4. LIST OF MATERIALS, QUANTITIES AND COSTS

Materials	Quantity	Costs
Plywood, 1/2"	30" x 36"	
Styrofoam insulation, 1/2" panel	30" x 24"	
Pine, 1" sq.	7 ft.	All of these
Metal rod, 1/8" (for 2 racks)	32 pcs. 13 1/2" 4 pcs. 14"	costs
Thermometer glass	1	will be
Cork, 1 1/2" dia.	1	figured
22 ga. copper plate	2" disc.	at the
#6 wood screw, 1/2"	1	time of
metal hinges, spring 1/2"	2	Production
Plexiglass, 3/16"	15" x 18"	
Rubber gasket, 1/8"	10 1/2" x 8"	
S. bolts, 3/16" - 24 NC x 1 1/2	10	
Metal pan, 6" x 10"	1	
Nails, 4D 1 1/4"	20	

5. TOOLS AND EQUIPMENT

Table saw
Hand saw
Tri-square
Ruler
Hand drill
Drill, 3/16"
Soldering iron
Solder
Screwdriver
Hammer
Glue
Pliers

ERIC

6. ASSEMBLY PROCEDURE -- MEDIUM-RANGE INCUBATOR

1. Measure, lay out and cut plywood for top, bottom, left and right side of incubator.
2. Sandpaper all components.
3. Measure, lay out and cut square hole on right side piece, and drill holes for bolts (#23).
4. Measure, lay out and bore holes on top piece and bottom piece.
5. Measure, lay out and cut plywood for back.
6. Sandpaper back piece.
7. Nail the two side pieces to bottom with 1 1/4" nails (apply glue before nailing).
8. Nail top piece to the two side pieces (apply glue before nailing).
9. Nail back piece to casing (apply glue before nailing).
10. Measure, lay out and cut support blocks (#13).
11. Sandpaper support blocks.
12. Nail support blocks to sides (apply glue before nailing).
13. Measure, lay out and cut back insulation piece.
14. Glue insulation to back piece.
15. Measure, lay out and cut insulation for top, bottom and side pieces.
16. Glue all insulation pieces into place.
17. Measure, lay out and cut legs (#27).
18. Sandpaper the legs.
19. Nail legs into place (apply glue before nailing).
20. Measure, lay out and cut metal disc (#18).
21. Install metal disc on top of incubator.
22. Measure, lay out and cut rubber gasket.
23. Lay out and drill holes in rubber gasket.
24. Measure, lay out and cut side plate.

25. Lay out and drill holes in side plate.

26. Measure, lay out and cut plexiglass door (#20).

27. Measure, lay out and drill holes for hinges on plexiglass door.

28. Install hinges (#19) on door (#20).

29. Measure, lay out and drill holes for hinges on side piece.

30. Install door and hinges onto side piece.

31. Measure and cut rods for racks (#14).

32. Weld all rods to form racks.

33. Install racks in incubator.

34. Drill holes in insulation for heating coil, thermometer and vent.

35. Measure, cut and drill hole in cork (#16) to hold thermometer.

36. Install thermometer into holder and install the unit into top of incubator.

37. Install heating coil on bottom of incubator.

38. Place metal pan (#25) into incubator.

39. Install side plate (#22).

40. Optional, paint incubator.

C. BINARY SYSTEM DEMONSTRATOR

The Binary System Demonstrator was designed because it was felt that a visual demonstration of the binary number system would be useful in helping students of computer science to understand how a base two system compares with our base ten system in representing the on-off circuitry of an electronic computer.

There are fifteen pushbuttons representing the base ten values of 1-15. When one of them is pressed, one or more of the four green lights at the top of the case will go on, representing the same value in a binary system. Thus, if the #1 button is pressed, only the green light at the far right goes on; if #2 is pressed, only the green light second from the right goes on; if #3 is pressed, both of those lights go on; if #8 is pressed, only the green light second from the left goes on, and so forth, up to #15, which lights all four green lights. These green lights, when on, represent the value(s) of one or more particular place column(s) in a binary number system, and can be used by the teacher to help students see how base two numbers relate to base ten numbers.

The toggle switches at the top can be used by teachers and students as a cross-check on how well the relationships are understood. The teacher asks a student to turn on the lights that represent the value 12 in binary. The student hits the two left-hand toggle switches and the accompanying red lights go on. Then, the student or teacherpresses #12 button and the two left-hand green lights go on, thus confirming the choice made with the toggle switches.

The device is simple to use and to make, but requires very careful control when drilling holes for switches and lights, when cutting the metal,

and when soldering the connections.

A word of caution: the switches and lights must be insulated from the metal case or else the whole unit shorts out whenever any button or switch is used.

ERIC

BINARY SYSTEM DEMONSTRATOR

SCALE: 1:2 (INCHES)

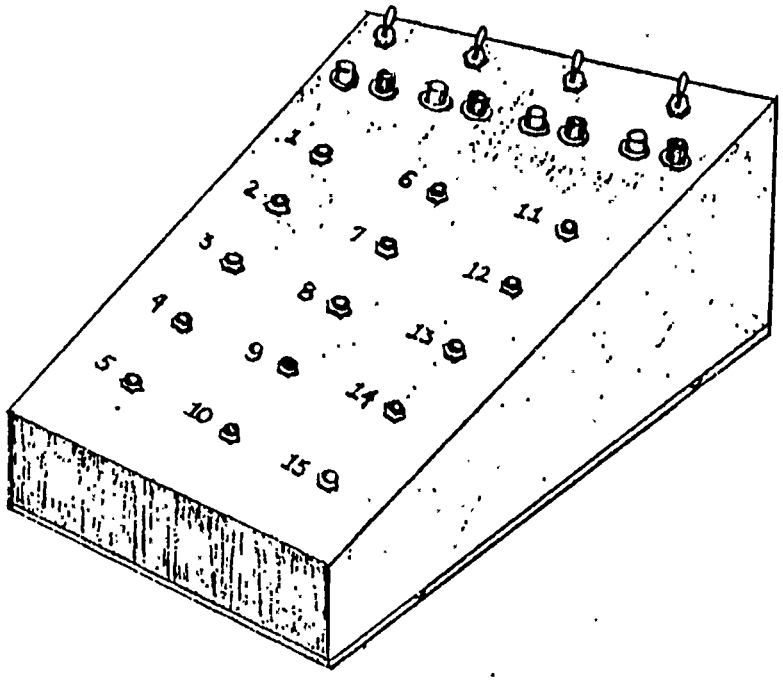

SKETCH
DRAWN BY S CONGLETON

Mario Umana Harbor School
of Science and Technology

August 15, 1978

SHEET 1 OF 3

Staff Development Project conducted by MIT - 8/78; funded by State Dept. of Ed., Div. of Occup. Ed., under Section 135 of P.L. 94-482, Project STEP #79-380-105-220-1.

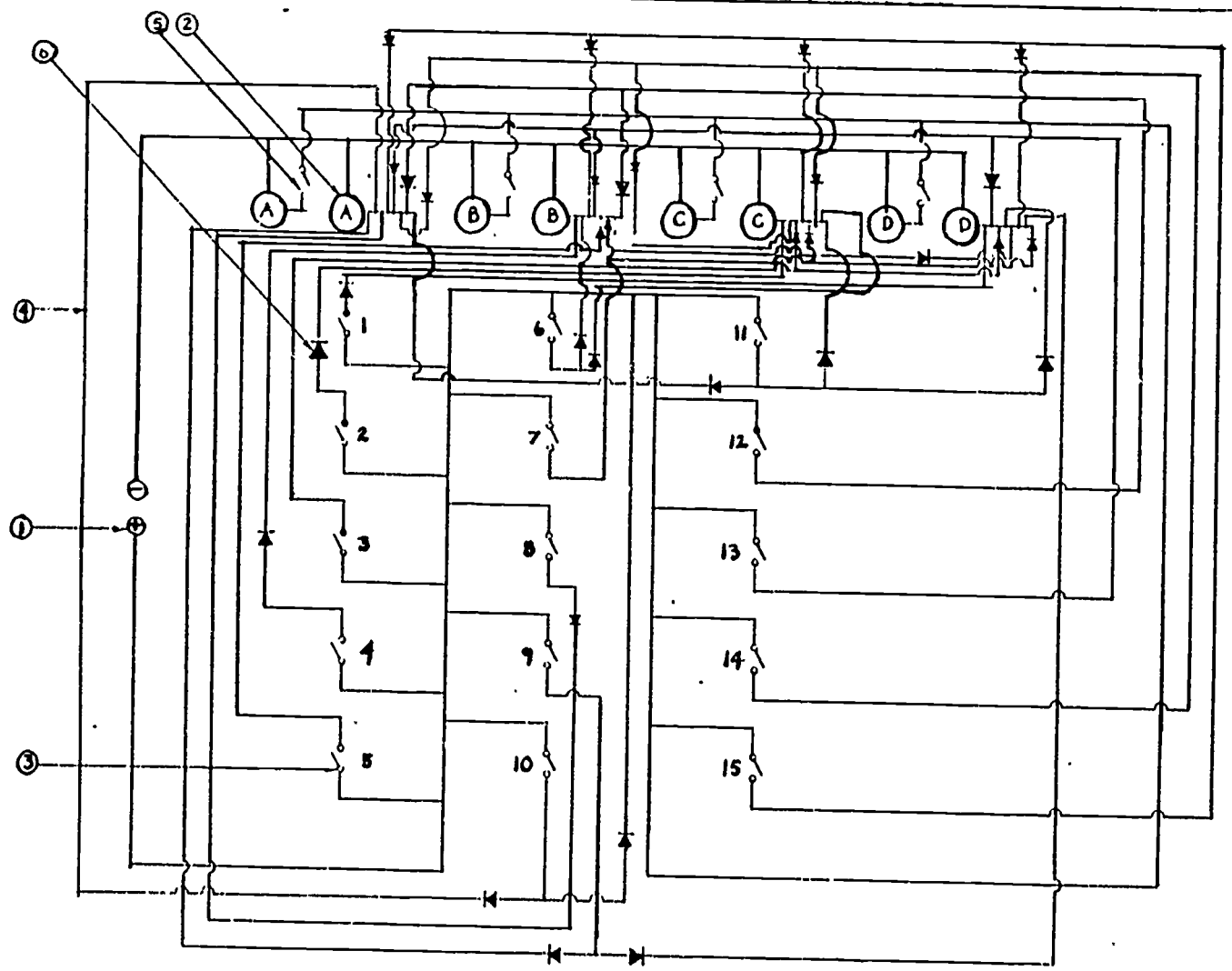

SCHEMATIC

NO.	MATERIALS	QTY.
1	"D" CELL BATTERY	1
	"D" CELL BATTERY HOLDER	1
2	SUB MINI SCREW LAMP 6V @ 100 mA T1¾ TYPE	8
	"MINI" PANEL LAMP ASSEMBLY	8
3	SPST MINIATURE PUSHBUTTON SWITCHES	15
4	24 AWG WIRE 19X36	1
5	SUBMINIATURE TOGGLE SWITCH	4
6	SWITCHING DIODES IN914/4148	32
7	METAL CASE 25 GA SHEET METAL	1
MISC.	PERFORATED BOARD 6⅞ x 9¾	1
	TERMINAL CONNECTORS 8 TERMINALS	6
8	⅛" PLEXIGLASS	1

NOTES: TERMINAL STRIPS MAY BE USED WHERE MULTIPLE CONNECTIONS ARE NECESSARY.

PANEL LAMP ASSEMBLY ARE 4 GREEN AND 4 RED

BINARY SYSTEM DEMONSTRATOR
DRAWN BY H. RIZZUTO
MARIO UMANA HARRIS
SCHOOL 8-16-78

SHEET 3 OF 3

Staff Development Project conducted by MIT - 8/78; funded by State Dept. of Ed., Div. of Occup. Ed., under Section 135 of P.L. 94-482, Project STEP #79-380-105-220-1.

PRODUCTION PLAN

Project Title: BINARY SYSTEM DEMONSTRATOR

1. BEHAVIORAL OBJECTIVES

(a) Given a base ten number from one to fifteen, students will be able to state the equivalent base two number.

(b) Given a base two number, students will be able to state its equivalent in the base ten system.

(c) Students will be able to use the Binary System Demonstrator switches to show equivalent values in base ten and base two number systems.

(d) Students will be able to construct an operational Binary System Demonstrator.

(e) Students will, by means of switches, demonstrate their understanding of the relationship between the binary number system and the off/on circuitry of computers.

ERIC

2. SCIENTIFIC CONCEPTS

(a) Our number system has ten as its base.

(b) Number systems can be based on other values besides ten.

(c) A number system with the base two is called a binary system.

(d) A binary system can be used to control electronic circuits which have only two positions: on or off.

(e) Electricity can flow only when there is a closed circuit in a conductor.

(f) Resistance to the flow of electricity can change electrical energy to heat and light energy.

ERIC

3. INDUSTRIAL ARTS/VOCATIONAL EDUCATION SKILLS

(a) Metals:

Measuring to tolerance of 1/16".
Cutting sheet metal to size.
Drilling holes in sheet metal at specified locations.
Deburring, filing, sanding.
Soldering in accordance with wiring diagram.
Installing toggle switches and lights.
Assembling the finished product.

ERIC

4. LIST OF MATERIALS, QUANTITIES AND COSTS

Materials	Quantity	Costs
"D" cell batteries	4	All of these costs to be figured at time of construction
"D" cell battery-holder	1	
Sub-mini-screw lamps 6 v, 100 ma	8	
Mini-panel lamp assembly	8	
SPST miniature pushbutton switches	15	
24 AWG wire 19 x 36	1	
Sub-mini toggle switch	4	
Switching diodes IN 914/4148	32	
25 ga. sheet metal	20" x 20"	
Perforated board	6 7/8" x 9 3/4"	
Terminal connectors - eights	6	
Plexiglass - 1/8"	9" x 11"	
Rub-off numbers	1-15	
Black primer paint (spray)	8 oz.	
Screws, metal 1/2" #6 with nuts	4 of each	
Steel wool	1 pad	

5. TOOLS AND EQUIPMENT

Hand drill
Drill press
Tin snips
Screwdriver
Brake shear
Soldering gun
Pliers
Wire-cutter
Tri-square
Ruler

ERIC

6. ASSEMBLY PROCEDURE - BINARY SYSTEM DEMONSTRATOR

1. Measure and lay out metal box for shape and location of holes.
2. Measure and lay out breadboard for hole locations.
3. Cut metal box to size.
4. Drill holes in metal box and breadboard as a unit (clamped together).
5. Bend metal box to shape.
6. Spot-weld metal box at joints.
7. Prepare metal box for painting.
8. Paint box.
9. Install toggle switches, pushbutton switches, and lamps onto breadboard.
10. Install terminal strips onto breadboard with poprivets (be sure to insulate rivets on front side to prevent them from shorting out entire unit).
11. Wire up the breadboard according to schematic provided.
12. Install breadboard unit into metal box.
13. Install battery-holder to metal box with poprivets.
14. Solder wiring to positive and negative terminal banks according to schematic.
15. Install batteries.
16. Cut plexiglass to size.
17. Measure and lay out hole locations for screws.
18. Drill holes in plexiglass.
19. Install plexiglass cover to back of metal box.
20. Install rub-on numbers to each pushbutton.

D. MODEL ROCKET AND LAUNCH ASSEMBLY

This small, lightweight model rocket is of a simple design and uses a commercial rocket engine. The electronic launcher assembly adds interest and safety to the unit. Although the unit is intended primarily to augment the Aviation curriculum at Umana, the electronic launcher provides a realistic link to another part of the curriculum. Electronics, after all, is an indispensible factor in all aerospace undertakings.

In using any rockets, even small models like this one, teachers should be sure to check with fire department and safety officials about where they may be launched. Safety precautions should be carefully spelled out to students and should be strictly followed.

The launch mechanism has a fail-safe switch (#4, #13, Sheet 4 of 5) that prevents any accidental ignition which might occur if the launch switch shorted out, or if someone pushed the launch switch by mistake. The fail-safe switch consists of a three-inch piece of 3/16" rod, which is bent into an eye at one end. The rod fits into an opening between two pieces of sheet metal which are part of the launch circuit (#8, Sheet 4 of 5), thus completing the circuit. In order to launch a rocket, three steps are necessary:

(a) close toggle switch #6;

(b) insert the rod in the fail-safe switch;

(c) close toggle switch #9.

Unless the person in charge has closed the fail-safe switch by inserting the rod, no launch can occur. Thus, there is complete control to assure that there will be no accidental or premature ignition of the rocket engine.

ROCKET AND LAUNCHER ASSEMBLY

SCALE 1:2 (INCHES)

SHEET 1 OF 5

SKETCH
DRAWN BY S CONGLETON

Mario Umana Harbor School
of Science and Technology

August 10,.1978

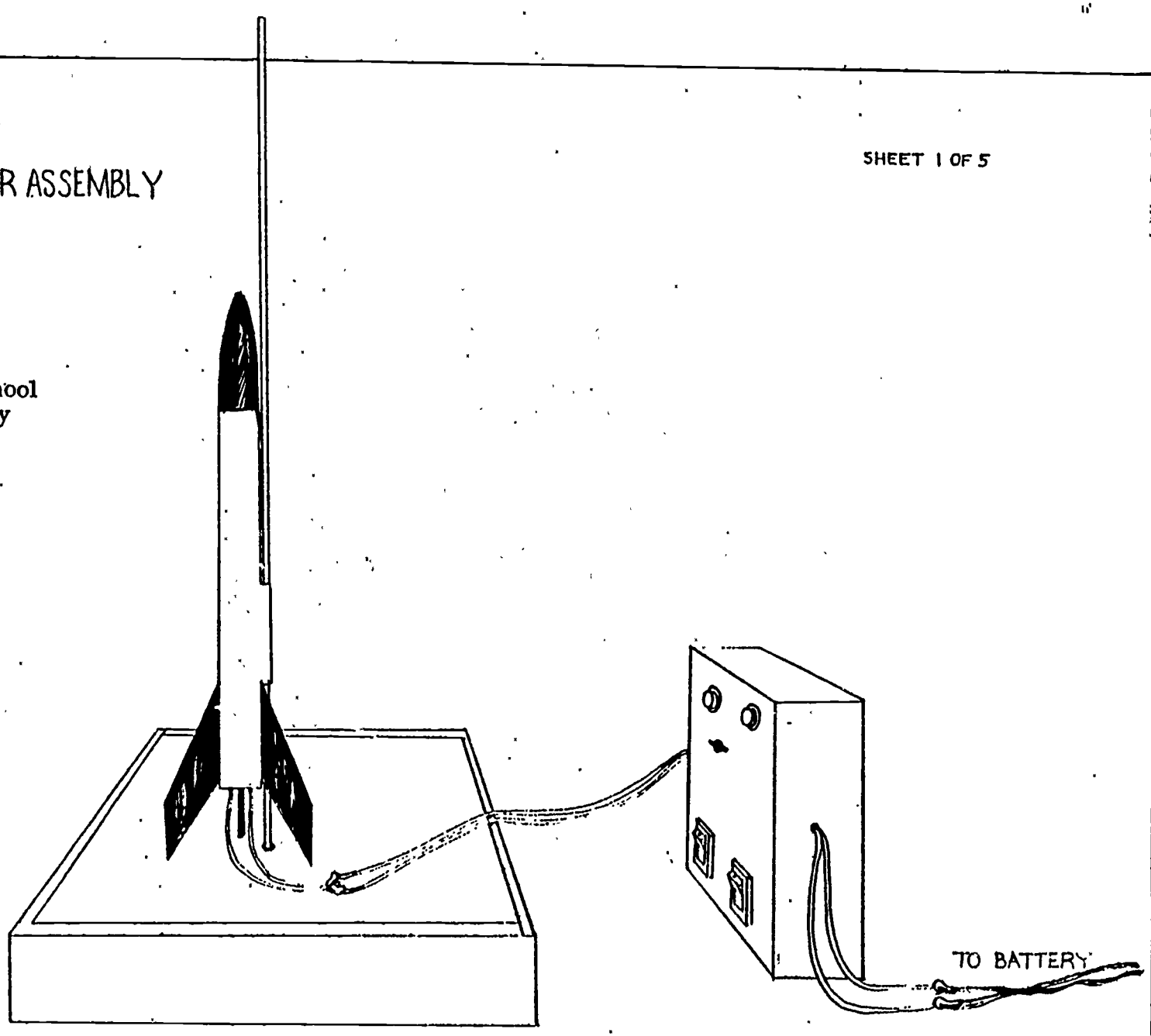

58

59

Staff Development Project conducted by MIT - 8/78; funded by State Dept. of Ed., Div. of Occup. Ed., under Section 135 of P.L. 94-482, Project STEP #79-380-105-220-1.

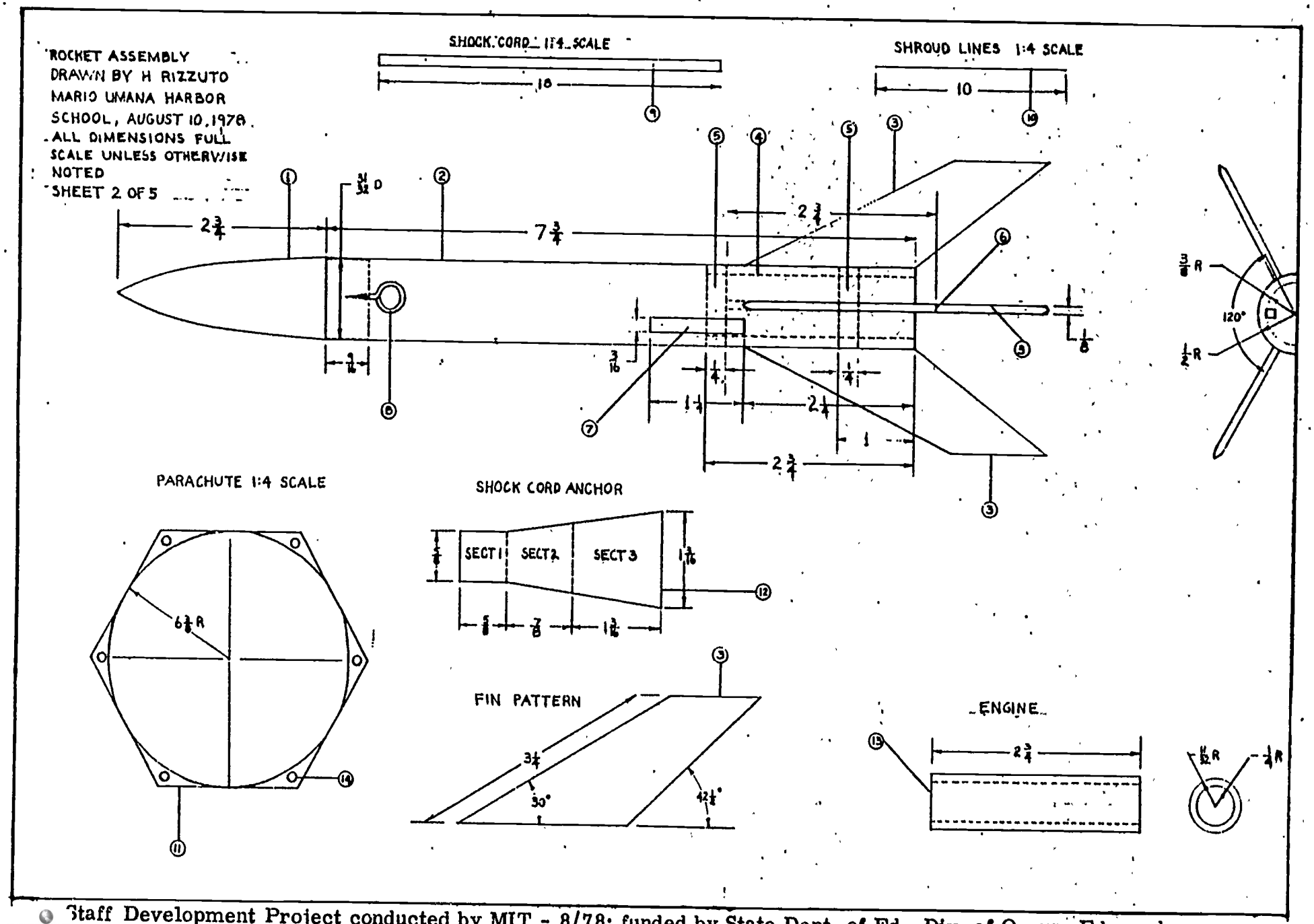

Staff Development Project conducted by MIT - 8/78; funded by State Dept. of Ed., Div. of Occup. Ed., under Section 135 of P.L. 94-482, Project STEP #79-380-105-220-1.

ROCKET ASSEMBLY PARTS LIST

NO	COMPONENT PARTS	QTY
1	NOSE CONE - BALSA WOOD	1
2	BODY TUBE - LIBRARY PASTE	1
3	FIN - BALSA	3
4	ENGINE HOLDER TUBE - LIBRARY PASTE	1
5	SPACING RING - LIBRARY PASTE	2
6	ENGINE HOLDER - SPRING STEEL	1
7	LAUNCHING LUG - STRAW	1
8	SCREW EYE - ½" LONG	1
9	SHOCK CORD - ⅛" ELASTIC BAND.	1
10	SHROUD LINES - HARD SURFACE	6
11	PARACHUTE - .0075" THICK PLASTIC	1
12	SHOCK CORD ANCHOR - PAPER	1
13	ENGINE - PURCHASED FROM COMMERCIAL SOURCES - ½ A 8 3	1
14	TAPE DISC - 3/4" PRESSURE SENSITIVE	6

PARACHUTE ASSEMBLY

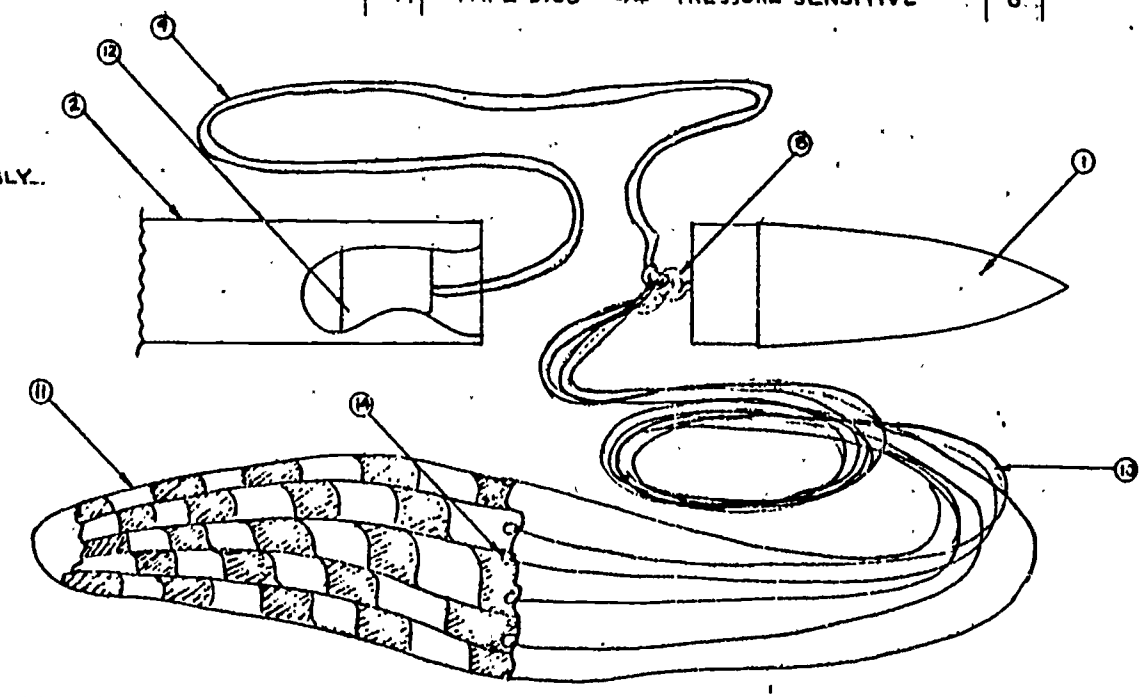

DRAWN BY H. RIZZUTO
MARIO UMANA HARBOR
SCHOOL, AUGUST 10, 1978
SHEET 3 OF 5

Staff Development Project conducted by MIT - 8/78; funded by State Dept. of Ed., Div. of Occup. Ed., under Section 135 of P.L. 94-482, Project STEP #79-380-105-220-1.

ROCKET LAUNCHER AND SCHEMATIC
DRAWN BY H. RIZZUTO 8-14-78
MARIO UMANA HARBOR SCHOOL
NOTE: ALL PLEXIGLASS COMPONENTS ARE BONDED WITH EPOXY
SHEET 4 OF 5

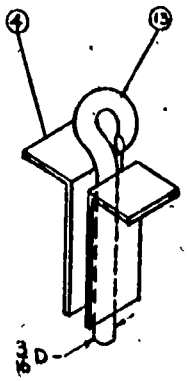

FAIL-SAFE SWITCH
SCALE 1:1

NO	COMPONENT PARTS	QTY
1	FRONT - PLEXIGLASS	1
2	TOP & BOTTOM - PLEXIGLASS	2
3	SIDES - PLEXIGLASS	2
4	FAIL-SAFE SWITCH	2
	SHEET METAL 1½ x ½	
5	ALLIGATOR CLIPS	2
6	SWITCH 1 - SPST	1
7	RESISTOR 1 - 330 OHMS	1
8	SWITCH 2 - FAIL SAFE	1
9	SWITCH 3 - PBNO	1
10	MICRO CLIPS	2
11	LIGHT EMITTING DIODE	2
12	RESISTOR 2 - 330 OHMS	1
13	1 PIECE BRAZING ROD 3" LONG	1

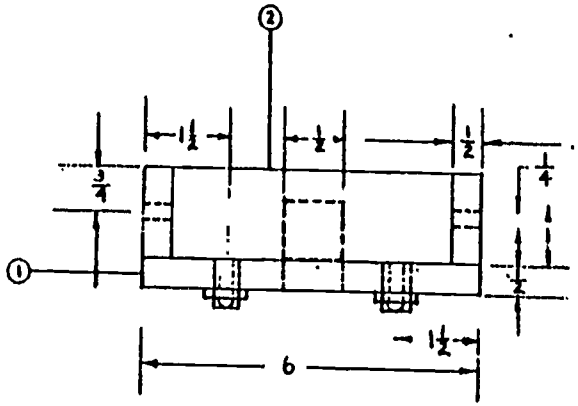

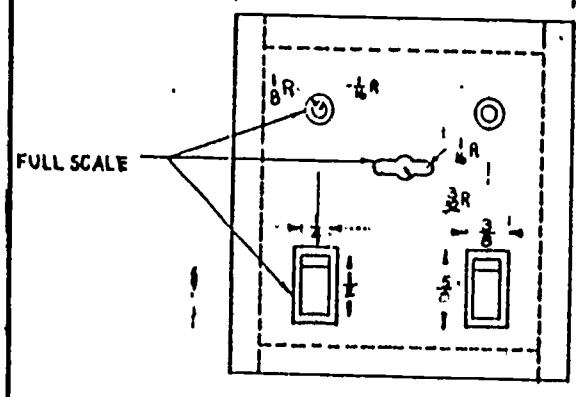

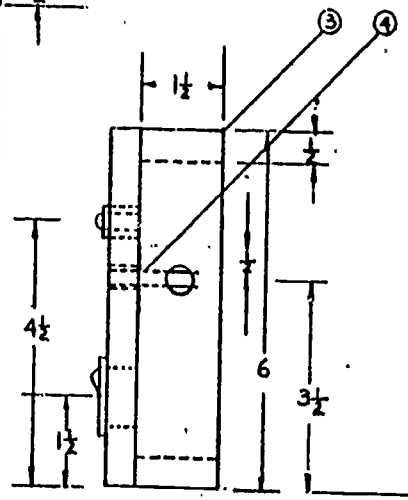

SCALE 1:2

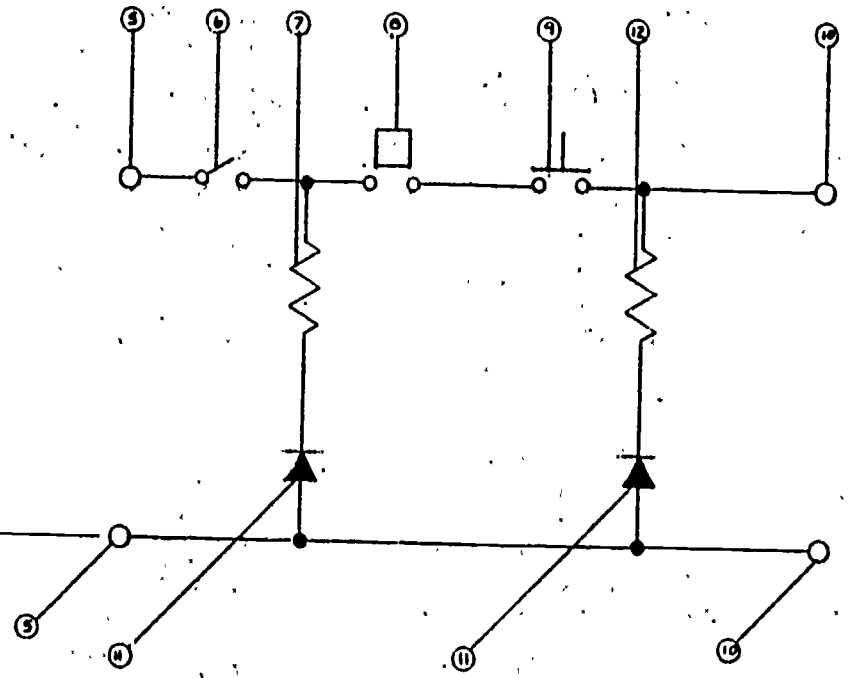

SCHEMATIC DIAGRAM

Staff Development Project conducted by MIT - 8/78; funded by State Dept. of Ed., Div. of Occup. Ed., under Section 135 of P.L. 94-482, Project STEP #79-380-105-220-1,

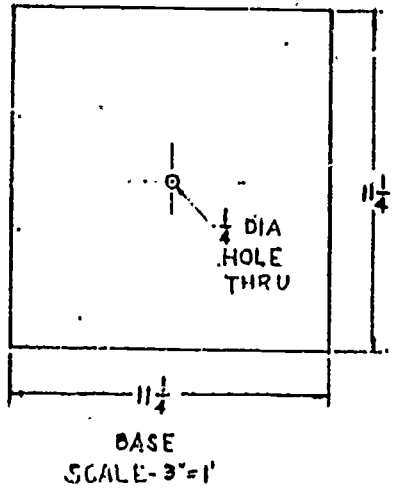

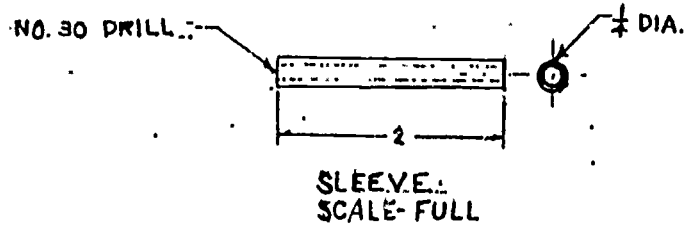

NOTES
1. ALL DIMENSIONS IN INCHES.
2. APPLY ELMER'S GLUE TO ALL JOINTS.
3. PAINT FRAME PARTS ON SIDES AND TOP.

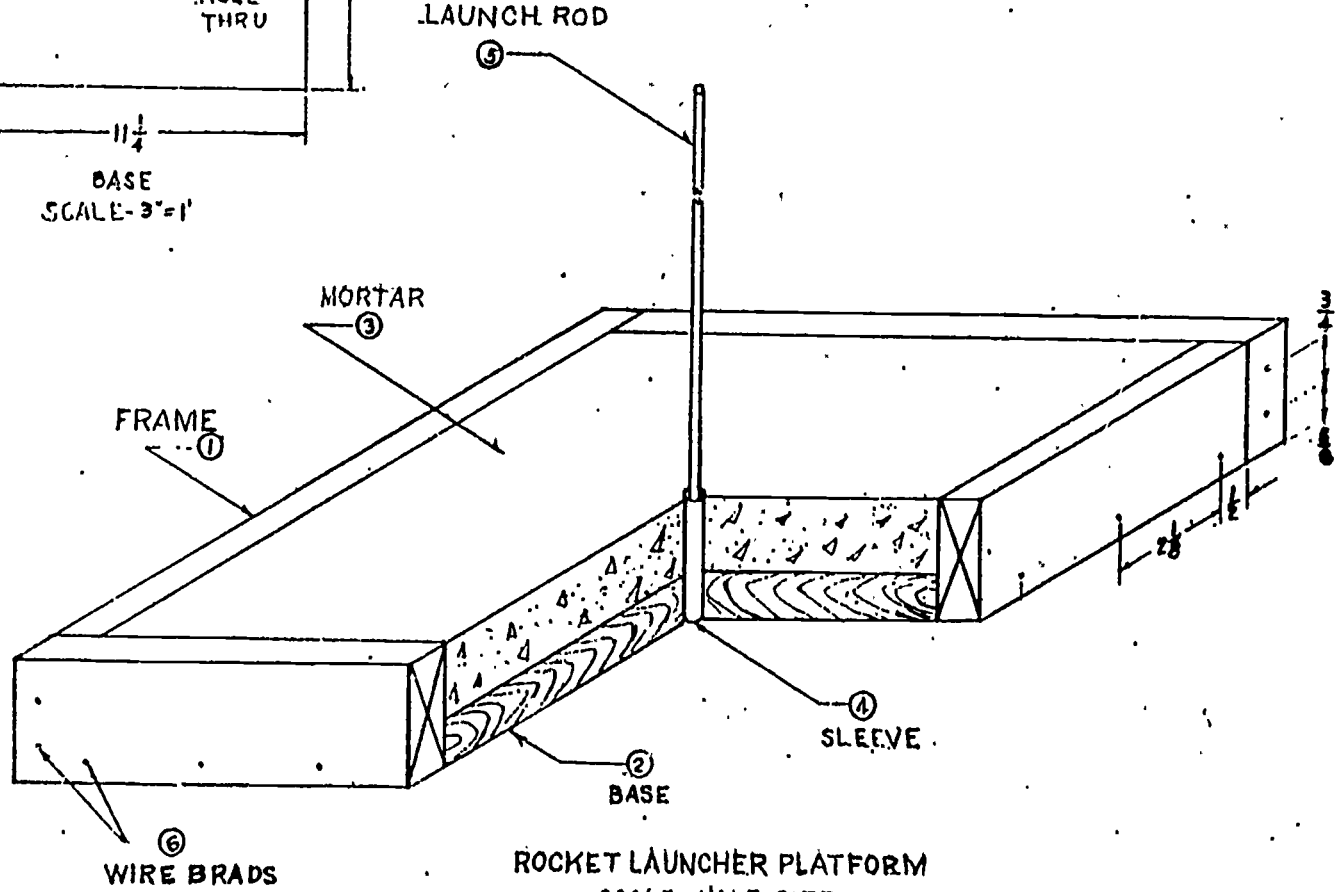

ROCKET LAUNCHER PLATFORM
SCALE- HALF SIZE

MATERIAL LIST

PART NO.	DESCRIPTION	QTY
1	LUMBER, PINE - 12 X 2 X 1	4
2	PLYWOOD, C-D GR 11 1/4 SQ. X 1/4	1
3	PORTLAND CEMENT	3 LB
3	SAND	6 LB
4	STEEL, C.R. BAR 1/4 DIA. X 2	1
5	STEEL, C.R. BAR 1/8 DIA. X 36	1
6	BRAD, WIRE 2" LONG	28
7	GLUE, ELMER'S	1 PT
8	PAINT, LUMINESCENT ORANGE	1 PT

66

67

SCALE-AS NOTED J. ZAMBELLO	MARIO UMANA HARBOR SCHOOL OF SCIENCE AND TECHNOLOGY	ROCKET LAUNCHER PLATFORM	10 AUGUST 1978 SHEET 5 OF 5

Staff Development Project conducted by MIT - 7/78; funded by State Dept. of Ed., Div. of Occup. Ed., under Section 135 of P.L. 94-482, Project STEP #79-380-105-220-1.

PRODUCTION PLAN

Project Title: MODEL ROCKET AND LAUNCH ASSEMBLY

1. BEHAVIORAL OBJECTIVES

(a) Students will be able to demonstrate Newton's third law: for every action there is an opposite and equal reaction.

(b) Students will be able to demonstrate that air is a fluid.

(c) Students will be able to demonstrate that hot gases expand.

(d) Students will be able to demonstrate that chemical reactions occur at specific rates.

(e) Students will be able to demonstrate principles of stability and center of gravity.

(f) Students will be able to demonstrate Bernoulli's principle.

(g) Students will be able to demonstrate Newton's first law of motion: a body remains at rest or in motion unless acted upon by an unbalanced external force.

(h) Students will be able to demonstrate wind resistance.

(i) Students will be able to demonstrate that electrical resistance produces heat.

(j) Students will be able to demonstrate that substances have different kindling temperatures.

(k) Students will be able to apply basic tool skills in the creation of both model rocket and launcher.

(l) Selected students with drafting skills will be able to interpret a sketch with dimensions stated and construct working drawings of component parts and the finished product.

(m) Students will be able to read detailed working drawings to produce components and assemble a final product.

2. SCIENTIFIC CONCEPTS

(a) For every action there is an equal and opposite reaction.

(b) Air is a fluid.

(c) Hot gases expand.

(d) Chemical reactions occur at different rates.

(e) Energy exists in interchangeable forms: chemical energy, electrical energy, heat energy, mechanical energy.

(f) The center of gravity of an irregularly shaped object is the point of balance.

(g) Bernouli's principle: as the velocity of a fluid increases, the pressure decreases; as the velocity of a fluid decreases, the pressure increases.

(h) A body remains at rest or in motion until acted upon by an unbalanced external force.

(i) Air is a substance that exhibits all the properties of matter.

(j) Electrical resistance in a conductor produces heat energy.

(k) Under given conditions, substances have a certain combustion point.

3. INDUSTRIAL ARTS/VOCATIONAL EDUCATION SKILLS

(a) Metals:

Use of measuring instruments to tolerance of 1/16".
Layout pattern for metal box.
Sheet metal bending.
Shearing sheet metal.
Filing and deburring.
Drillpress.
Screwdrivers.

(b) Wood:

Use of measuring instruments to tolerance of 1/16".
Use of hand saw.
Use of table saw.
Use of hammer.
Use of belt-sander.
Use of utility knife.
Use of template.

4. LIST OF MATERIALS, QUANTITIES AND COSTS

Materials	Quantity	Costs
Balsa wood, 1/8" x 1" x 4"	1 piece	All of these
Balsa wood, 1/8" x 3 1/4" x 2 1/4"	3 pieces	costs
Library paste	4 oz.	
Brown wrapping paper (for tube)	12" x 12"	to be
Soda straw	1	
Screw eye, 1/2"	1	figured
Elastic cord, 1/8" x 15"	1	at
Nylon fishing line	36"	time of
Rocket engine type 1/2 A83	1	construction
Discs, 1/4" dia., pressure sensitive tape	1 doz.	
Plexiglass, 1/8" x 6" x 6"	2 pieces	
Plexiglass, 1/8" x 1 1/2" x 5"	4 pieces	
Sheet metal, 1 1/2" x 1 1/2"	2	
Alligator clips	2	
Switch, SPST	1	
Switch, fail-safe, PBNO	2	
Micro-clips	2	
Light-emitting diode	2	
Resistors, 330 ohms	2	
Brazing rod, 3/16" x 3"	1 piece	
Pine, 1" x 2" x 12"	4	
Plywood, C-Dgr. 3/4"	1 square foot	
Portland cement	3 lbs	

Materials	Quantity	Costs
Sand	6 lbs.	All of these
Steel bar 1/8"	3 ft.	costs to be
Steel bar 1/4"	2 ft.	figured at
Wire brads, 2"	28	time of
Elmer's glue	1 pint	construction
Paint, luminescent orange	1 pint	

5. TOOLS AND EQUIPMENT

Vise
Hack saw
Lathe
Drillpress
#30 gauge drill
1/4" drill
Table saw
Tri-square
Hammer
1/8" and 1/4" collets
Facing tool
Large bucket or mortar boat
Trowel

6. ASSEMBLY PROCEDURE - MODEL ROCKET LAUNCHER PLATFORM

A. Sleeve:

1. Measure 1/4" steel rod to size, secure in vise and cut one piece 2 1/8".
2. Set up lathe with 1/4" collet and secure rod in collet.
3. Set up facing tool and face one end of rod, then reverse and face other end.
4. Set up drill chuck with center drill and spot end of rod, then remove center drill.
5. Install #30 gauge drill and drill through rod.
6. Chamfer both ends of rod with 1/4" diameter drill to deburr.

B. Launch Frame:

1. Measure 1' x 2' board and cut four pieces, each 12" long.
2. Join four pieces to form mortar frame; fasten with glue and 2" brads.
3. Measure and cut 3/4" plywood to 11 1/4" square.
4. Glue and nail plywood to mortar frame.
5. Lay out hole for launch rod sleeve in center of plywood and drill 1/4" hole.

C. Rocket Launcher:

1. Measure 1/8" steel rod to size, secure in vise and cut one piece 36".
2. Set up lathe with 1/8" collet, install rod and file both ends to remove burr, then smooth with emery cloth.

D. Final Assembly of Rocket Launch Platform:

1. Mix approximately 3 pounds Portland cement and 6 pounds sand in mortar frame, add water and mix thoroughly.
2. Position steel sleeve upright in hole in center of frame.

3. Trowel mortar in frame to make smooth and even with top of frame.

4. Set aside for mortar to cure (at least one day).

E. Rocket:

1. Shape nose cone in accordance to diagram.

2. Sandpaper nose cone.

3. Make body tube, engine-holder tube and spacing rings from wrapping paper and library paste in accordance with specifications (metal rods may be used to obtain uniform shape).

4. Measure, lay out and cut fins from balsa wood.

5. Sandpaper fins and round off leading edges.

6. Measure, lay out and cut engine-holder to size.

7. Bend engine-holder to shape.

8. Measure, lay out and cut launching lug from straw.

9. Cut anchor from pattern design provided.

10. Measure, lay out and cut shock cord to size.

11. Measure and cut shroud lines to size.

12. Measure, lay out and cut parachute to size.

13. Attach engine-holder to engine-holder tube.

    (a) Measure 1/4" from one end of the engine-holder tube and punch a slot for the forward hook of the engine-holder.

    (b) Apply glue along engine-holder and put the holder into its position.

    (c) Hold the assembly until the glue has set.

14. Attach spacing rings to engine-holder tube.

    (a) Apply a line of glue around the front end of the engine-holder tube and slide a ring into place.

    (b) Smooth out any excess glue.

    (c) Cut a slot into the other ring to allow for the engine-holder.

(d) Run a line of glue around the tube 1" from the rear and slide the slotted ring into place.

(e) Apply a line of glue to each joint between ring and tube.

15. Prepare shock cord-holder and install shock cord.

(a) Cut shock cord anchor from pattern sheet, pre-fold on dotted lines.

(b) Apply glue to Section 1. Lay the end of the shock cord in place. Fold the first section over the second one.

(c) Apply glue over the back side of the first and the exposed part of Section 2. Fold section 2 over Section 3.

(d) Apply glue to the inside of the body tube where the shock cord mount will seat. Hold shock cord mount in place and firmly until glue sets.

16. Mark the body tube for fins and launching lug, according to specifications.

17. Install the engine-holder assembly into the body tube.

(a) Apply glue about 1" up inside the rear end of the body tube.

(b) Slide the engine mount unit into place in one smooth motion.

(c) The end of the mount tube should be even with the end of the body tube.

(d) The engine hook protrudes 1/4" to the rear.

18. Attach the fins and launching lug.

(a) Apply a line of glue along the root edge of a fin. Carefully align this edge on one side of a guide line so that it is parallel to the line and sticks straight out from the body tube.

(b) Do the same with the other two fins.

(c) Apply a line of glue along the launching lug and place it centered between two fins.

(d) Stand this assembly on its forward end and allow to dry.

19. Install the screw-eye.

(a) Put the screw-eye into the base of the nose cone and remove it. Squirt a bit of glue into the hole and reinsert the screw-eye.

20. Parachute Assembly.

(a) Draw the parachute to specified design.

(b) Cut the parachute to shape.

(c) Cut shroud lines to size.

(d) Tape all shroud lines at anchor points designated.

(e) Gather all shroud lines and tie together.

21. Apply final fillets, sealer and paint.

(a) Apply glue fillets to fins and launching lug. Let dry completely.

(b) Apply sanding sealer to all balsa surfaces. Allow it to dry and sandpaper.

(c) Apply butyrate dope finish (four or more coats) to entire outside surfaces of rocket (sand between coats).

(d) Apply a spray (mist) coat of base color and let dry.

(e) Spray two or more "mist" coats, sanding the rocket lightly between each coat.

(f) The final coat of paint is applied "wet" (glossy finish) and let dry.

22. Final Assembly.

(a) Tie the free end of the shock cord to the screw-eye.

(b) Tie the shroud lines to the screw-eye.

(c) Insert wadding into tube and then insert parachute assembly into body tube and place nose cone on the body tube.

E. ELECTRONIC METAL LOCATOR

This is a simple electronic device for locating metals on or near the surface. It can be used on the beach or on a grassy field where coins and other metal objects might be found.

The locator uses a small transister radio to give audible evidence of the presence of metal. The case is made of plexiglass and the handle is made of wood to avoid interference that would result from using metal for these purposes.

The oscillator circuitry is very simple and the use of a perforated board makes for a unit that is challenging enough to be interesting, but within the reach of most students. All of the parts are stock items available at stores like Radio Shack, Lafayette, etc.

ERIC

ELECTRONIC METAL LOCATOR

SCALE: 1:4 (INCHES)

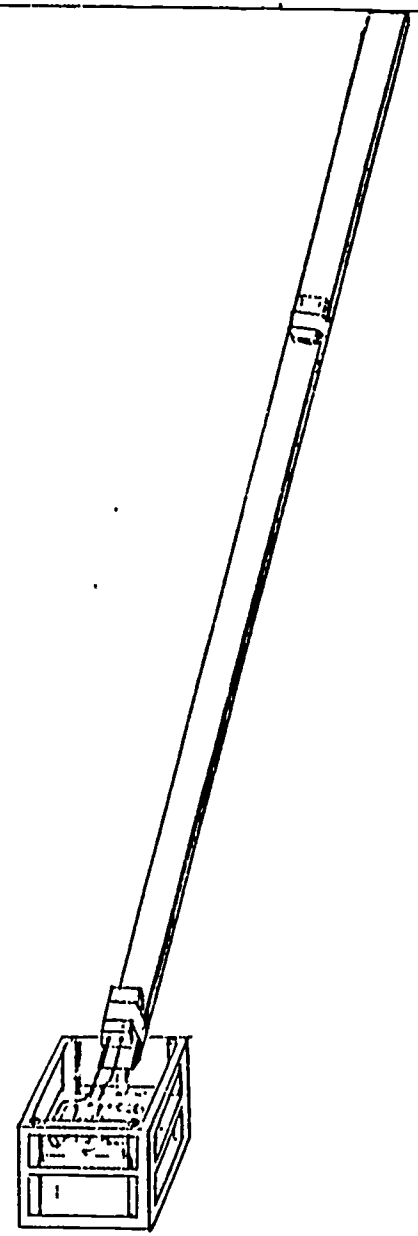

SKETCH

DRAWN BY S. CONGLETON

SHEET 1 OF 4

Mario Umana Harbor School
of Science and Technology

August 14, 1978

79

80

Staff Development Project conducted by MIT - 8/78; funded by State Dept. of Ed., Div. of Occup. Ed., under Section 135 of P.L. 94-482, Project STEP #79-380-105-220-1.

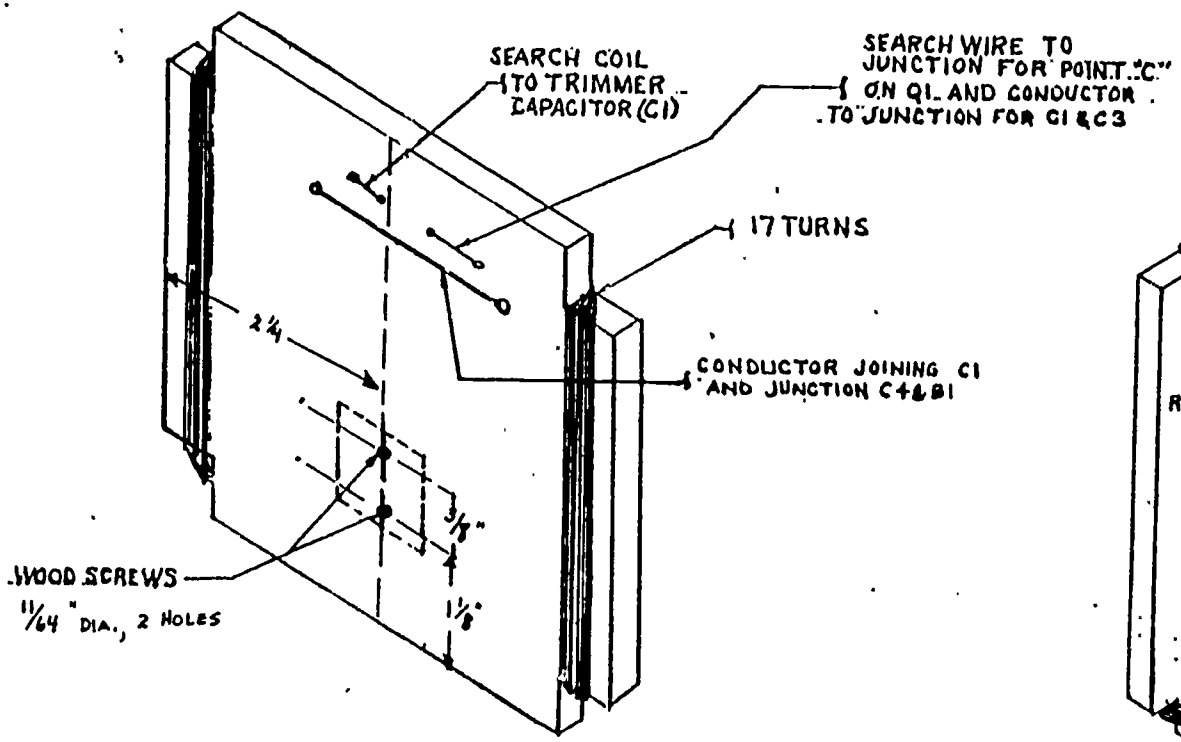

BOTTOM VIEW

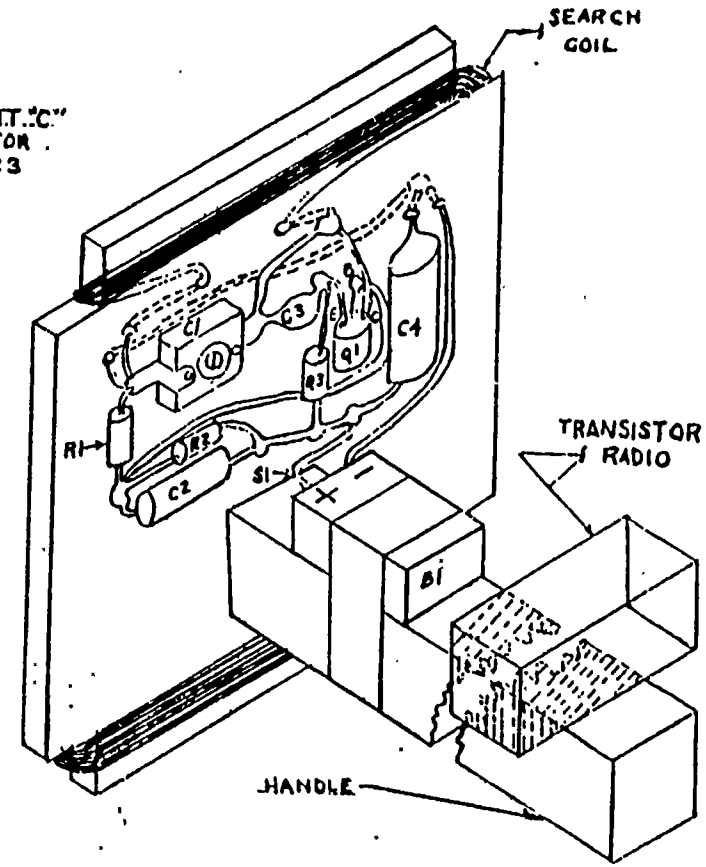

TOP VIEW OF ASSEMBLY.

SCALE - FULL SIZE J ZAMBELLO	MARIO UMANA HARBOR SCHOOL OF SCIENCE AND TECHNOLOGY	ELETRONIC METAL LOCATOR	14 AUGUST 1978 SHEET 2 OF 4

aff Development Project conducted by MIT - 8/78; funded by State Dept. of Ed., Div. of Occup. Ed., under ction 135 of P.L. 94-482, Project STEP #79-380-105-220-1.

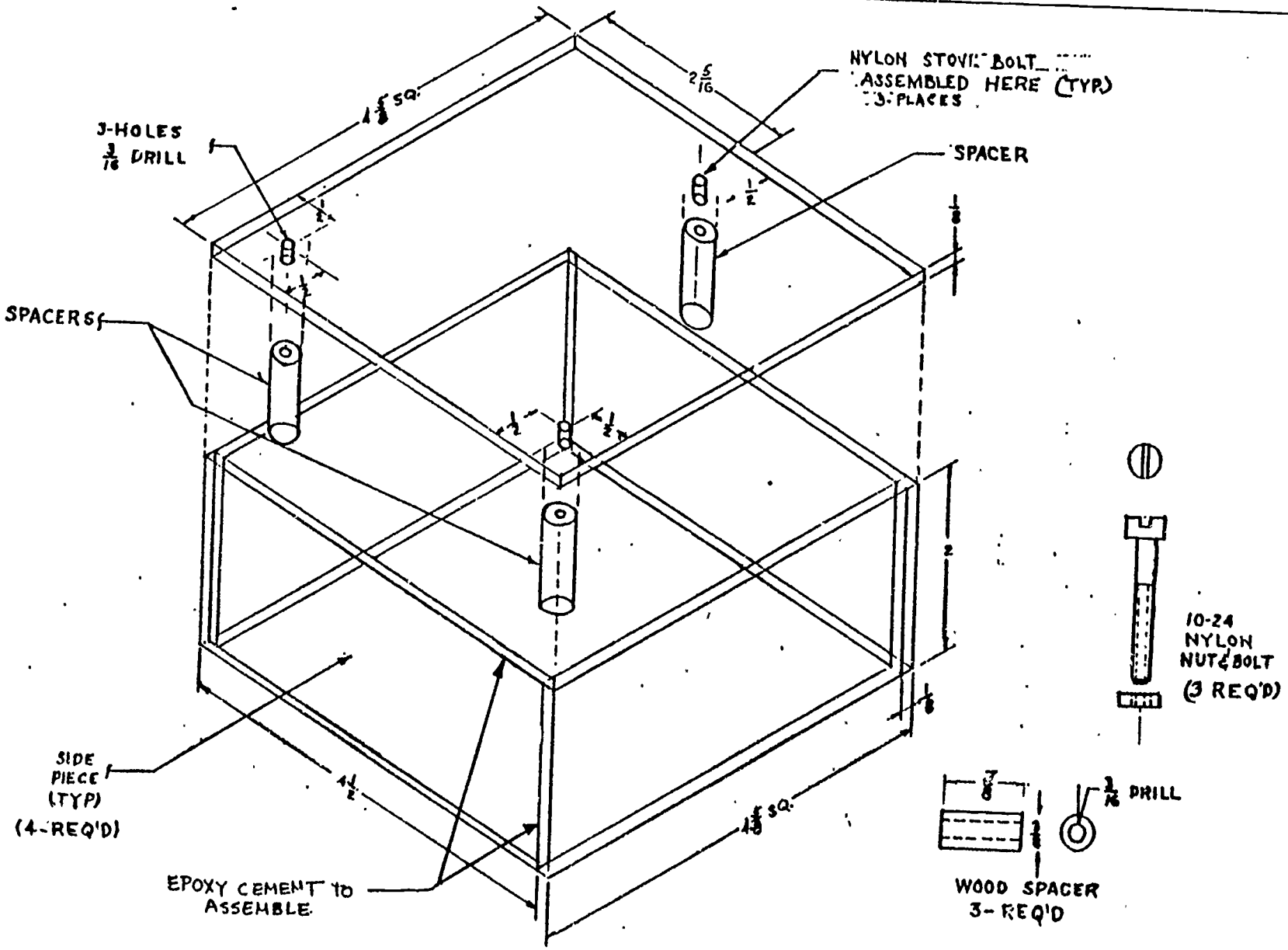

SCALE- FULL SIZE J. ZAMBELLO	MARIO UMANA HARBOR SCHOOL OF SCIENCE AND TECHNOLOGY	ELECTRONIC METAL LOCATOR	17 AUGUST 1978 SHEET 3 OF 4

Staff Development Project conducted by MIT - 8/78; funded by State Dept. of Ed., Div. of Occup. Ed., under Section 135 of P.L. 94-482, Project STEP #79-380-105-220-1.

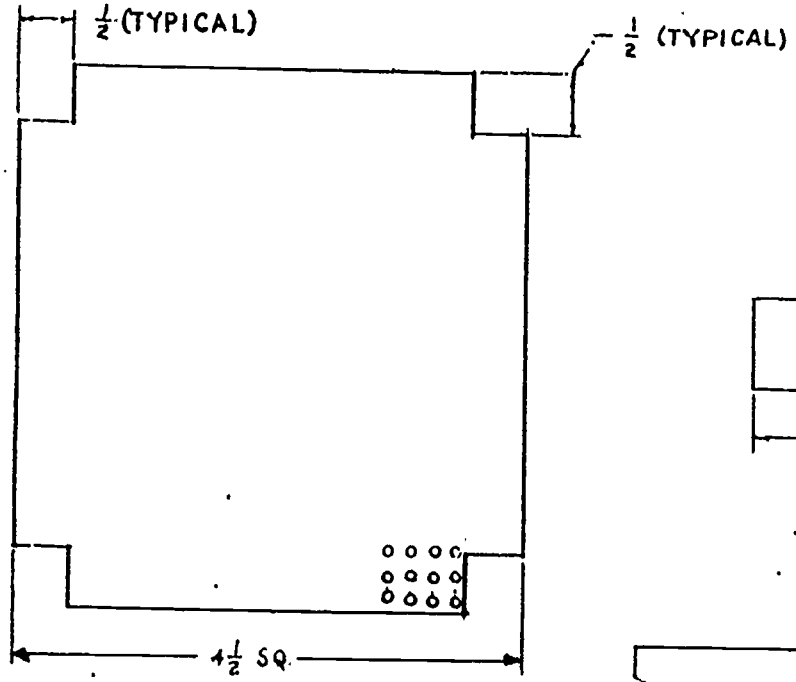

PERFORATED BOARD

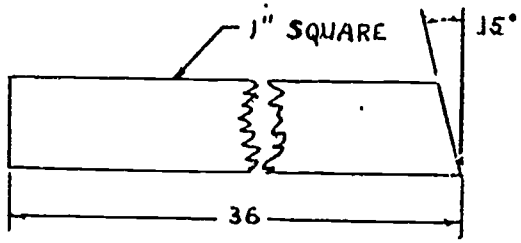

HANDLE

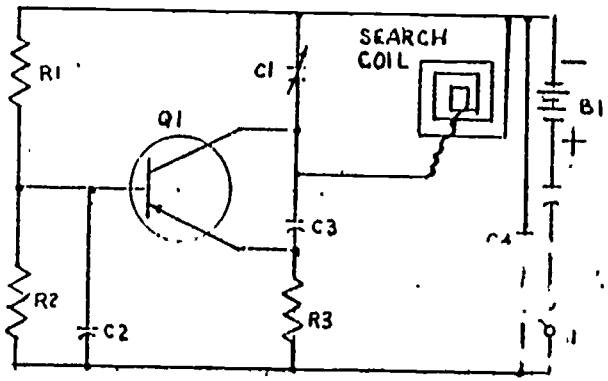

SCHEMATIC

MATERIALS

B1-9V BATTERY
C1-25-280 μμf TRIMMER CAPACITOR (LAFAYETTE 34C 6832 OR EQUIV.)
C2-.02 μf, 400V TUBULAR CAPACITOR
C3-100 μμf, 1000V CERAMIC DISC CAPACITOR
C4-.05 μf, 400V TUBULAR CAPACITOR

Q1-PNP TRANSISTOR, GENERAL PURPOSE
R1-47,000 OHM, ½ WATT 10% RESISTOR
R2-10,000 OHM, ½ WATT 10% RESISTOR
R3-680 OHM, ½ WATT 10% RESISTOR
S1-SPST SLIDE SLIDE OR TOGGLE SWITCH
SEARCH COIL-NO. 22 ENAMELED WIRE
MISC.- WOOD, 1" PINE, SPRUCE OR HEMLOCK
3-10-24, NYLON STOVE BOLT, 1" LONG
1-4½ SQUARE PERFORATED BOARD
3FT-½" WIDE MASKING TAPE
PLEXI-GLASS-⅛ THICK, ½ SQ.FT
DOWEL-⅛ DIA, 3" LONG
1-TRANSISTOR RADIO

SCALE-FULLSIZE J. ZAMBELLO	MARIO UMANA HARBOR SCHOOL OF SCIENCE AND TECHNOLOGY	ELECTRONIC METAL Locator	14 AUGUST 1978 SHEET 4 OF 4

Staff Development Project conducted by MIT - 8/78; funded by State Dept. of Ed., Div. of Occup. Ed., under Section 135 of P.L. 94-482, Project STEP #79-380-105-220-1.

PRODUCTION PLAN

Project Title: ELECTRONIC METAL LOCATOR

1. BEHAVIORAL OBJECTIVES

(a) Students will be able to construct a functional device that can detect the presence of metals.

(b) Students will be able to describe the electrical circuitry of an electronic metal locator.

(c) Students will be able to demonstrate the use of resistors/capacitors.

(d) Students will be able to apply basic tool skills in the creation of a metal locator.

(e) Selected students with drafting skills will be able to interpret a sketch with stated dimensions and construct working drawings of component parts and the finished product.

(f) Students will be able to read detailed working drawings and/or work from these drawings to produce components and assemble the final product.

2. SCIENTIFIC CONCEPTS

(a) An oscillator generates radio frequency voltages (RF).

(b) A capacitor accumulates an electrical charge.

(c) Electrical energy may be stored as chemical energy.

(d) Different materials have different electrical resistance and abilities to control current.

(e) A change in inductance in one of two RF oscillators (by proximal metal) results in a differential in frequency oscillation that can be audibly detected.

ERIC

3. INDUSTRIAL ARTS/VOCATIONAL EDUCATION SKILLS

(a) Metals:

Sheet metal bending.
Hand metal punch.
Tin snips.
Metal notcher.
Break shear.
Layout solution.
Deburring.
Finishing (painting).

(b) Plastics:

Cut plexiglass (1/8").
Cementing.
Drilling.

ERIC

4. LIST OF MATERIALS, QUANTITIES AND COSTS

Materials	Quantity	Costs
9 volt battery	1	All of these costs to be figured at time of construction
25-280 uuf Trimmer capacitor (Lafayette 34C6832 or equiv.)	1	
.02 uf, 400 volt tubular capacitor	1	
100 uuf, 1,000 volt ceramic disc capacitor	1	
.05 uf, 400 volt tubular capacitor	1	
PNP transistor general purpose	1	
47,000 ohm, 1/2 watt, 10% resistor	1	
10,000 ohm, 1/2 watt, 10% resistor	1	
680 ohm, 1/2 watt, 10% resistor	1	
SPST slide or toggle switch	1	
#22 enameled wire	20 ft.	
Epoxy cement	1 tube	
1" square pine, spruce, or hemlock	3 ft.	
Solder and flux	3 oz.	
10-24 nylon stove bolt, 1" long	3	
Perforated board	pc. 4" square	
Masking tape, 1/2" wide	5 ft.	
1/8" plexiglass	1/2 sq. ft.	
Wood dowel, 3/8" diameter	3 sq. ft.	
Transister radio	1	

5. TOOLS AND EQUIPMENT

Soldering iron
Table saw
Carbide-tipped blade
Drill-press
3/16 diameter drill
Center drill
Fine sandpaper
Miter box
Hand drill
5/64" drill
Sloyd knife
11/64" drill
3/16" drill
Screwdriver
Pliers
Ruler
Tri-square

ERIC

6. ASSEMBLY PROCEDURE - ELECTRONIC METAL LOCATOR

A. Electronic Components:

1. Assemble items except wiring as shown on "Sheet 2 of 4" to perforated board.

2. Solder all wire connections as shown on drawing, using needle pliers as heatsink.

3. Wrap seventeen turns of #22 enameled wire around board to form search coil.

4. Solder one end of coil to trimmer capacitor (C-1) and the other end to junction of leads from PNP transistor (Q-1), ceramic disk capacitor (C-3) and other lead from trimmer capacitor (C-1).

5. Solder top lead of tubular capacitor (C-4) to 9 volt battery negative terminal; then solder positive terminal lead to junction of R-2, C-2, K-3, C-4.

B. Plexiglass Case:

1. Lay out the following on plexiglass while paper backing is still attached.

   (a) 1 piece 4 5/8" square.

   (b) 4 pieces 4 1/2" x 2".

2. Cut plexiglass to size with table saw (carbide-tipped blade) and smooth edges with fine sandpaper.

3. Lay out for these holes, 3/16" diameter on 4 5/8" square piece (as shown on Sheet 2 of 2).

4. Use drill-press to center drill according to layout.

5. Remove center drill and install 3/16" diameter drill; then drill three holes.

6. Remove paper backing, apply epoxy cement to one 2" edge of each rectangular piece, form into a square box and allow cement to set.

7. Apply epoxy cement to top edge of square box and place 4 5/8" piece on top, holding until cement sets.

C. Wood-spacers:

1. Cut 3/8" dowel into three pieces, each 1" long.

2. Sand ends smooth.

3. Use lathe with three-jaw chuck in spindle and 3/16" drill in tail stock to drill hole through each piece.

D. Handle:

1. Cut one piece of 3/4" square wood 36" long.

2. Use miter box to cut 15 degree angle on one end.

3. Sandpaper all surfaces smooth.

4. On 15 degree angle end, lay out two holes 1/2" from sides, 5/16" from top and bottom surfaces.

5. Drill holes 5/64" diameter on #48 drill, 7/8" deep.

E. Perforated Board:

1. Cut a piece of 1/8" perforated board to square 4 1/2" x 4 1/2".

2. Cut out at each corner a 1/2" square, using a Sloyd knife.

3. Lay out two holes for attaching handle, 1/8" from top and bottom edge of handle, and 2 1/4" from either side.

4. Drill two holes 11/64" diameter for #8 wood screws.

5. Place perforated board inside plexiglass box and using bottom plate as template, lay out three holes for spacers.

6. Drill three holes 3/16" in perforated board as laid out above.

F. Final Assembly:

1. Assemble wood handle to perforated board, using two #8 round head screws 1" long.

2. Attach one 9 volt battery to handle with 1/2" masking tape.

3. Attach perforated board and handle to plexiglass case, using three 10-24 nylon nuts and bolts.

4. Attach terminal clips to 9 volt battery as shown in Sheet 2 of 4.

5. Attach one small transistor to handle near top, using masking tape.

APPENDIX A

UMANA LIBRARY RESOURCES

A. MAGAZINES

Aviation Week and Space Technology
Changing Times
Elementary Electronics
Flying Models
Industrial Education
Mechanics Illustrated
Mother Earth News
Popular Electronics
Popular Mechanics
Popular Science
Radio-Electronics
School Shop
Scientific American
Science Digest
Smithsonian

B. BOOKS

621.381 ELE	Electronics Illustrated ARCO Publishing Co., Inc., New York, 1973
500 MOR	Boys' Book of Science and Construction Alfred P. Morgan Lothrop, Lee and Shepard Co., New York, 1969
621.384 MOR	The Boys' Fourth Book of Radio and Electronics Alfred Morgan Charles Scribner's Sons, New York, 1969
507.4 STO	The Complete Guide to Science Fair Competition John C. Stoltzfus and Dr. Morris N. Young Hawthorne Book, Inc., New York, 1972
621.46	Electric Motors Al G. Renner G.D. Putnam's Sons, New York, 1974
551.5028 TRO	Experiments in Meteorology Leslie W. Trowbridge Doubleday Co., Inc., New York, 1962
629.4 BRA	Experiments in the Principles of Space Travel Franklyn M. Branley Thomas Y. Crowell Co., New York, 1973

502.8 WEB	How to Do a Science Project David Webster Franklin Watts Inc., New York, 1974
501 MOO	How to Make Your Science Project Scientific Thomas Moorman Atheneum, New York, 1976
502.8 HOE	Illustrated Treasury of General Science Activities Robert G. Hoehn Parker Publishing Co., Inc., New York, 1975
621.381 SES	Miniature Projects for Electronic Hobbyists Ken W. Sessions, Jr. Tab Books, Pennsylvania, 1973
629.47 LOW	Model Rocketry Peter Lowry and Field Griffith Doubleday and Co., Inc., New York, 1972
629.47 LOW	Model Rocketry G. Harry Stine Follett Publishing Company, Chicago, 1976
621.381 FRI	99 Electronic Projects Herbert Friedman Howard W. Sans and Co., Inc., Indiana, 1971
668.4 SWA	Plastics Technology Robert S. Swanson McKnight & McKnight Publishing Co., Illinois, 1965
507 SAW	Science Fair Projects Roger Williams Sawyer and Robert A. Farmer ARCO Publishing Co., New York, 1977
507.2 MOO	Your Science Fair Project William Moore G.P. Putnam's Sons, New York, 1964
502.8 SOM	Science Projects in Ecology Seymour Simon Holiday House, New York, 1972
621.381 NOL	Science Projects in Electronics Edward M. Noll Howard W. Sams and Co., Inc., Indiana, 1973
507.2 STO	Science Project Puzzlers A. Horris Stone Prentice-Hall, New York, 1969

507.2 STO — Science Projects You Can Do
George K. Stone
Prentice-Hall, Inc., New Jersey, 1963

507 STO — More Science Projects You Can Do
George K. Stone
Prentice-Hall, Inc., New Jersey, 1970

507.2 UNE — 700 Science Experiments for Everyone
Gerald Wendt
Doubleday and Co., Inc., New York, 1958

507.2 VRI — The Third Book of Experiments
Leonard de Vries
MacMillan Co., New York, 1966

"END OF DOCUMENT"