DOCUMENT RESUME

ED 224 919 CE 034 660

AUTHOR Davis, Ronald; Yancey, Bruce
TITLE Architectural Drafting.
INSTITUTION Mid-America Vocational Curriculum Consortium, Stillwater, Okla.
PUB DATE 82
NOTE 723p.; For related documents see ED 219 653-654.
AVAILABLE FROM Mid-America Vocational Curriculum Consortium, 1515 West Sixth Avenue, Stillwater, OK 74074 (Write for price).
PUB TYPE Guides - Classroom Use - Materials (For Learner) (051) -- Guides - Classroom Use - Guides (For Teachers) (052)

EDRS PRICE MF04 Plus Postage. PC Not Available from EDRS.
DESCRIPTORS Air Conditioning; *Architectural Drafting; Behavioral Objectives; Building Design; Building Plans; Competency Based Education; Construction Materials; Criterion Referenced Tests; Electrical Systems; *Engineering Drawing; Guidelines; Heating; Instructional Materials; Job Skills; Learning Activities; Plumbing; Postsecondary Education; Site Analysis; Specifications; Structural Building Systems; Systems Analysis; *Technical Education; *Technical Illustration; Ventilation
IDENTIFIERS Dimensioning (Mechanical Drawing)

ABSTRACT

Designed to be used as a supplement to a two-book course in basic drafting, these instructional materials consisting of 14 units cover the process of drawing all working drawings necessary for residential buildings. The following topics are covered in the individual units: introduction to architectural drafting, lettering and tools, site conditions, residential design, structural systems and building materials, introduction to working drawings, dimensioning, foundations, details, plumbing, forced air heating/ventilating/air conditioning (HVAC) systems, electrical systems, specifications, and presentation drawings. Included in the individual instructional units are some or all of the following: performance objectives, suggested activities for instructors, information sheets, transparency masters, job sheets, assignment sheets, tests, and test answers. Instructional materials in the publication are written in terms of student performance, using measurable objectives, and are accompanied by criterion-referenced instruments. (MN)

Architectural Drafting

by

Ronald Davis

and

Bruce Yancey

Developed by the

Mid-America Vocational Curriculum Consortium, Inc.

Printed by

Oklahoma State Department of Vocational and Technical Education
Stillwater, Oklahoma 74074


North Dakota
South Dakota
Nebraska
Colorado
Kansas
Missouri
Oklahoma
Arkansas
New Mexico
Texas
Louisiana

ARCHITECTURAL DRAFTING
TABLE OF CONTENTS

FOREWORD

Architectural Drafting is the fourth volume of a series of drafting materials being produced by the Mid-America Vocational Curriculum Consortium. *Basic Drafting: Book One* and *Basic Drafting: Book Two* comprise the basics necessary to be employed in a drafting occupation. This book, *Architectural Drafting*, is designed to be used as a supplement to them so that the student can specialize.

Upon completion of this book, the students will have gone through the process of drawing all working drawings necessary for residential buildings such as foundation, floor, elevation, detail, plumbing, and mechanical plans. The student's compiled portfolio will provide numerous examples for prospective employers. The user may also wish to utilize two other MAVCC publications, *Residential Solar Systems* (4 units) and "Light Commercial Drafting" (one unit), which supplement the information and skills learned in *Architectural Drafting.*

The success of this publication is due, in large part, to the capabilities of the personnel who worked with its development. The technical writers have numerous years of industry as well as teaching and writing experience. Assisting them in their efforts were committee representatives who brought with them technical expertise and experience related to the classroom and to the trade. To assure that the materials would parallel the industry environment and be accepted as a transportable basic teaching tool, other organizations and industry representatives were involved in the developmental phases of the manual. Appreciation is extended to them for their valuable contributions to the manual.

Instructional materials in this publication are written in terms of student performance using measurable objectives. This is an innovative approach to teaching that accents and augments the teaching/learning process. Criterion referenced evaluation instruments are provided for uniform measurement of student progress. In addition to evaluating recall information, teachers are encouraged to evaluate the other areas including process and product as indicated at the end of each instructional unit.

It is the sincere belief of the MAVCC personnel and all those members who served on the committee that this publication will allow the students to become better prepared and more effective members of the work force. If there is anything that we can do to help this publication become more useful to you, please let us know.

Merle Rudebusch, Chairman
Board of Directors
Mid-America Vocational
Curriculum Consortium

PREFACE

For many years those responsible for teaching drafting have felt a need for better quality materials to use in this area. To address this need, MAVCC has previously published two texts, *Basic Drafting, Book One* and *Basic Drafting, Book Two*. During the development of these basic materials, an even greater need was established, that being supplemental materials to help the students specialize in various areas of drafting. The team of teachers, industry representatives, teacher educators, and state level supervisors who had produced the original materials accepted this challenge and have now completed two of the supplements, *Mechanical Drafting* and *Architectural Drafting*. They are both designed to be used in addition to the first two publications, and are developed to strengthen students competence in their specialized field of drafting.

This publication is designed to assist teachers in improving instruction. As this publication is used, it is hoped that the student performance will improve so the students will be better able to assume a role in their chosen occupation. Every effort has been made to make this publication basic, readable, and by all means, usable. Three vital parts of instruction have been intentionally omitted: motivation, personalization, and localization. These areas are left to the individual instructors who should capitalize on them. Only then will this publication really become a vital part of the teaching-learning process.

In addition, we would appreciate your help. We check for content quality, spelling, and typographical errors many times in the development of a manual. It is still possible, however, for an error to show up in a publication.

We are trying to provide you with the best possible curriculum materials and will certainly appreciate your help in detecting areas where possible corrections are needed to maintain the quality you want and deserve.

Ann Benson
Executive Director
Mid-America Vocational
Curriculum Consortium, Inc.

ACKNOWLEDGEMENTS

Appreciation is extended to those individuals who contributed their time and talents in the development of *Architectural Drafting*.

The contents of this publication were planned and reviewed by the following members of the Mid-America Vocational Curriculum Consortium drafting committee:

Bruce Yancey	Hunter, Oklahoma
W.H. Parkison	Nachitoches, Louisiana
Ronald D. Davis	Wayne, Oklahoma
Karen Schertz	Boulder, Colorado
Rick Roman	Austin, Texas
Gerald R. McClain	Stillwater, Oklahoma
John H. Schmelz	Santa Fe, New Mexico
Milton Moore	St. Joseph, Missouri
Keith Lockard	Lincoln, Nebraska
James Brown	Pine Bluff, Arkansas
Thomas M. Palmer	Devil's Lake, North Dakota
Charles E. Carbonneau	Watertown, South Dakota
Joe Porter	Pittsburg, Kansas

Special appreciation is extended to Jack Hefner and Bill Hill of the Oklahoma State Department staff, representing state level supervision, and to Tom Sutherlin, teacher educator at Cameron University, for their technical assistance with the text.

Special thanks must be given to Larry Don Raney of Larry Don Raney and Associates, Oklahoma City architectural firm, and Glen Summers of Glen A. Summers and Associates, Stillwater, Oklahoma architectural firm, for their contributions of valuable artwork for this book.

Gratitude is expressed to the employees of the Graphics Division of the Oklahoma State Department of Vocational and Technical Education for the typing, artwork, and printing of this text.

Thanks are also extended to Mary Kellum, Supervising Editor, and to Dan Fulkerson and Jane Huston for their assistance with editing and proofreading.

USE OF THIS PUBLICATION

Instructional Units

Architectural Drafting includes fourteen units. Each instructional unit includes some or all of the basic components of a unit of instruction: performance objectives, suggested activities for teachers and students, information sheets, assignment sheets, job sheets, visual aids, tests, and answers to the test. Units are planned for more than one lesson or class period of instruction.

Careful study of each instructional unit by the teacher will help to determine:

A. The amount of material that can be covered in each class period
B. The skills which must be demonstrated
   1. Supplies needed
   2. Equipment needed
   3. Amount of practice needed
   4. Amount of class time needed for demonstrations
C. Supplementary materials such as pamphlets or filmstrips that must be ordered
D. Resource people who must be contacted

Objectives

Each unit of instruction is based on performance objectives. These objectives state the goals of the course, thus providing a sense of direction and accomplishment for the student.

Performance objectives are stated in two forms: unit objectives, stating the subject matter to be covered in a unit of instruction; and specific objectives, stating the student performance necessary to reach the unit objective.

Since the objectives of the unit provide direction for the teaching-learning process, it is important for the teacher and students to have a common understanding of the intent of the objectives. A limited number of performance terms have been used in the objectives for this curriculum to assist in promoting the effectiveness of the communication among all individuals using the materials.

Following is a list of performance terms and their synonyms which may have been used in this material:

Name	Identify	Describe
Label	Select	Define
List in writing	Mark	Discuss in writing
List orally	Point out	Discuss orally
Letter	Pick out	Interpret
Record	Choose	Tell how
Repeat	Locate	Tell what
Give	Label	Explain

Order	Distinguish	Construct
Arrange	Discriminate	Draw
Sequence	Differentiate	Make
List in order		Build
Classify		Design
Divide		Formulate
Isolate		Reproduce
Sort		Transcribe
		Reduce
		Increase
		Figure

Demonstrate	Additional Terms Used	
Show your work	Evaluate	Prepare
Show procedure	Complete	Make
Perform an experiment	Analyze	Read
Perform the steps	Calculate	Tell
Operate	Estimate	Teach
Remove	Plan	Converse
Replace	Observe	Lead
Turn off/on	Compare	State
(Dis) assemble	Determine	Write
(Dis) connect	Perform	

Reading of the objectives by the student should be followed by a class discussion to answer any questions concerning performance requirements for each instructional unit.

Teachers should feel free to add objectives which will fit the material to the needs of the students and community. When teachers add objectives, they should remember to supply the needed information, assignment and/or job sheets, and criterion tests.

Suggested Activities for the Instructor

Each unit of instruction has a suggested activities sheet outlining steps to follow in accomplishing specific objectives. Duties of instructors will vary according to the particular unit; however, for best use of the material they should include the following: provide students with objective sheet, information sheet, assignment sheets, and job sheets; preview filmstrips, make transparencies, and arrange for resource materials and people; discuss unit and specific objectives and information sheet; give test. Teachers are encouraged to use any additional instructional activities and teaching methods to aid students in accomplishing the objectives.

Information Sheets

Information sheets provide content essential for meeting the cognitive (knowledge) objectives in the unit. The teacher will find that the information sheets serve as an excellent guide for presenting the background knowledge necessary to develop the skill specified in the unit objective.

Students should read the information sheets before the information is discussed in class. Students may take additional notes on the information sheets.

Transparency Masters

Transparency masters provide information in a special way. The students may see as well as hear the material being presented, thus reinforcing the learning process. Transparencies may present new information or they may reinforce information presented in the information sheets. They are particularly effective when identification is necessary.

Transparencies should be made and placed in the notebook where they will be immediately available for use. Transparencies direct the class's attention to the topic of discussion. They should be left on the screen only when topics shown are under discussion.

Job Sheets

Job sheets are an important segment of each unit. The instructor should be able to and in most situations should demonstrate the skills outlined in the job sheets. Procedures outlined in the job sheets give direction to the skill being taught and allow both student and teacher to check student progress toward the accomplishment of the skill. Job sheets provide a ready outline for students to follow if they have missed a demonstration. Job sheets also furnish potential employers with a picture of the skills being taught and the performances which might reasonably be expected from a person who has had this training.

Assignment Sheets

Assignment sheets give direction to study and furnish practice for paper and pencil activities to develop the knowledges which are necessary prerequisites to skill development. These may be given to the student for completion in class or used for homework assignments. Answer sheets are provided which may be used by the student and/or teacher for checking student progress.

Test and Evaluation

Paper-pencil and performance tests have been constructed to measure student achievement of each objective listed in the unit of instruction. Individual test items may be pulled out and used as a short test to determine student achievement of a particular objective. This kind of testing may be used as a daily quiz and will help the teacher spot difficulties being encountered by students in their efforts to accomplish the unit objective. Test items for objectives added by the teacher should be constructed and added to the test.

Test Answers

Test answers are provided for each unit. These may be used by the teacher and/or student for checking student achievement of the objectives.

ARCHITECTURAL DRAFTING
Instructional/Task Analysis

JOB TRAINING: What the Worker Should Be Able to Do (Psychomotor)	RELATED INFORMATION: What the Worker Should Know (Cognitive)

UNIT I: INTRODUCTION

1. Terms and definitions
2. Fundamental structural systems
3. Styles
4. Reference books
5. Office phases
6. Job titles and qualifications
7. Use architectural reference materials
8. Interview an architectural drafter

UNIT II: LETTERING AND TOOLS

1. Styles of lettering
2. Importance of good lettering
3. Heights of lettering
4. Types of lettering guides
5. Lettering instruments
6. Tools and materials
7. Sharpen lead correctly
8. Letter using the Condensed style
9. Letter using the Extended style
10. Letter using the Variation style
11. Letter using the Kabel Modern style
12. Letter using the Chisel style
13. Letter using the Triangle style
14. Letter using the Shadow style

JOB TRAINING: What the Worker Should Be Able to Do (Psychomotor)	RELATED INFORMATION: What the Worker Should Know (Cognitive)

UNIT III: SITE CONDITIONS

	1. Terms and definitions
	2. Site considerations
	3. Building codes
	4. Types of zoning regulations
	5. Residential protective covenant
	6. Components and symbols of plot plans
	7. Procedure for drawing a plot plan
	8. Grade marks
9. Compile a list of site considerations	
10. Calculate altitude angle and azimuth using interpolation	
11. Calculate altitude angle and azimuth using a sun angle calculator	
12. Determine the cast of a shadow using altitude and azimuth	
13. Revise plans to correct prevailing wind and orientation problems	
14. Draw a site plan	
15. Draw a plot plan	
16. Determine cut and fill needed on a given lot	

UNIT IV: RESIDENTIAL DESIGN

	1. Planning a residence
	2. Characteristics which affect building design
	3. Rooms in basic areas of a house
	4. Characteristics of rooms

15

JOB TRAINING: What the Worker Should Be Able to Do (Psychomotor)	RELATED INFORMATION: What the Worker Should Know (Cognitive)
	5. Traffic flow
	6. Storage facilities
	7. Steps for making a preliminary residential sketch
8. Determine client needs	
9. Plan a kitchen	
10. Plan a sleeping area	
11. Plan a bathroom	
12. Plan traffic patterns	
13. Plan storage facilities	
14. Develop a preliminary residential sketch	

UNIT V: STRUCTURAL SYSTEMS AND BUILDING MATERIALS

1. Terms and definitions
2. Types of framing systems
3. Types of wood floor sill constructions
4. Types of wood floor joist framings
5. Purpose of bridging
6. Wall framing members
7. Methods of frame bracing
8. Types of sheathing
9. Types of roofs
10. Roof framing members
11. Types of cornices
12. Types of post and beam framing
13. Building materials

JOB TRAINING: What the Worker Should Be Able to Do (Psychomotor)	RELATED INFORMATION: What the Worker Should Know (Cognitive)
	14. Material symbols
	15. Materials in concrete mix
	16. Construction masonry products
	17. Glass products
	18. Uses of plastic
	19. Types of insulation materials
	20. Metal products
	21. Roofing materials
	22. Wood products
	23. Abbreviations
24. Determine sizes of wood floor joists and roof rafters	
25. Determine sizes of wood girders	
26. Determine sizes of steel beams	
27. Determine sizes of exterior or interior wall headers	

UNIT VI: INTRODUCTION TO WORKING DRAWINGS

	1. Terms and definitions
	2. Title blocks
	3. U.S. scales used on working drawings
	4. Order of set of residential working drawings
	5. Abbreviations
	6. Plan symbols
	7. Factors to consider when drawing elevations
	8. Steps in projecting elevations
	9. Types of schedules

JOB TRAINING: What the Worker Should Be Able to Do (Psychomotor)	RELATED INFORMATION: What the Worker Should Know (Cognitive)
10. Sketch a floor plan of your house	
11. Draw a floor plan from a preliminary sketch	
12. Sketch different roofs on an elevation	
13. Resketch an elevation to eliminate the inconsistent use of materials	
14. Sketch two different elevations of the same floor plan	
15. Draw a front and side elevation	
16. Draw a front elevation on an uneven terrain	
17. Complete a door and window schedule	

UNIT VII: DIMENSIONING

1. Terms and definitions
2. Line technique at corners
3. Uses of dimensioning
4. Drawing wall thicknesses
5. General dimensioning rules
6. Site and plot plan dimensioning
7. Elevation dimensioning
8. Detail and wall section dimensioning
9. HVAC plan dimensioning
10. Plumbing plan dimensioning
11. Advantages of modular system
12. Modular dimensioning
13. Metric dimensioning
14. Dimensioning abbreviations

JOB TRAINING: What the Worker Should Be Able to Do (Psychomotor)	RELATED INFORMATION: What the Worker Should Know (Cognitive)
15. Identify dimensioning errors	
16. Dimension a floor plan	
17. Dimension an elevation	
18. Prepare and dimension a floor plan according to a modular system	
19. Dimension a detail using metric system (optional)	

UNIT VIII: FOUNDATIONS

1. Terms and definitions
2. Abbreviations
3. Types of floor systems
4. Wood foundations
5. Types of footing systems
6. Footing detail drawings
7. Methods of waterproofing
8. Methods of protecting from termites
9. Methods of preventing breakage of foundations
10. Designing and constructing a footing
11. Designing piling and grade beams
12. Designing a slab foundation system
13. Symbols
14. Live and dead loads
15. Steps in drawing a foundation plan

17

JOB TRAINING: What the Worker Should Be Able to Do (Psychomotor)	RELATED INFORMATION: What the Worker Should Know (Cognitive)
16. Calculate the footing requirements for a typical one-story frame house	
17. Calculate pier or column footing requirements	
18. Draw a foundation plan	
19. Detail a foundation section	

UNIT IX: DETAILS

	1. Terms and definitions
	2. Features and types of stairways
	3. Stairway formulas
	4. Stair slopes
	5. Components of a fireplace
	6. Types of fireplaces
	7. Parts of window and window section drawing
	8. Parts of a door section drawing
	9. Steps for drawing a wall section detail
10. Construct a stairway layout	
11. Draw fireplace construction details	
12. Draw typical cabinet details	
13. Draw door and window section details	
14. Draw a wall section detail	

UNIT X: PLUMBING

	1. Terms and definitions
	2. Types of heating used in plumbing systems
	3. Parts of a plumbing system

JOB TRAINING: What the Worker Should Be Able to Do (Psychomotor)	RELATED INFORMATION: What the Worker Should Know (Cognitive)
	4. Parts of a waste disposal system and materials used
	5. Classification of vents
	6. Parts of water system
	7. Piping symbols and abbreviations
	8. Types of drawings
9. Calculate the size of a building sewer line	
10. Construct plumbing drawings of a building drain system	
11. Construct plumbing drawings for a residential building	
12. Design a septic system	

UNIT XI: FORCED AIR HVAC SYSTEMS

	1. Terms and definitions
	2. Steps in HVAC design
	3. Types of supply duct systems
	4. Climatic zones
	5. Locations of registers and grilles
	6. Symbols
	7. Rules for drawing HVAC plans
	8. Sizing pipe and ducts
	9. Types of return-air systems
	10. Heat loss and heat gain
	11. Procedure for drawing an HVAC plan

JOB TRAINING: What the Worker Should Be Able to Do (Psychomotor)	RELATED INFORMATION: What the Worker Should Know (Cognitive)
12. Estimate heat loss for a temporary residence	
13. Calculate shaded and unshaded glass areas for use in heat gain estimates	
14. Estimate heat gain for a temporary residence	
15. Evaluate the addition of insulation in relation to heat loss and heat gain	
16. Estimate heat loss and heat gain for your design project	
17. Draw an HVAC plan for your design project	
18. Prepare equipment schedules	

UNIT XII: ELECTRICAL

1. Terms and definitions
2. Types of lighting dispersement
3. Electrical service entrance installation
4. Types of residential branch circuits
5. Wiring devices
6. Types of cables
7. Conductor letter designations
8. Designing an electrical system
9. Floor plan symbols
10. Circuit safety devices

JOB TRAINING: What the Worker Should Be Able to Do (Psychomotor)	RELATED INFORMATION: What the Worker Should Know (Cognitive)
11. Answer questions related to residential wiring practices using the NEC	
12. Interpret conduit fill tables using the NEC	
13. Locate allowable ampacities for various conductors using the NEC	
14. Calculate service size and minimum number of circuits	
15. Locate receptacle, switch, and lighting outlets	

UNIT XIII: SPECIFICATIONS

	1. Terms and definitions
	2. Purposes of specifications
	3. Information included in specifications
	4. Characteristics of specifications
	5. Errors to be aware of in specifications
6. Answer questions related to materials used in residential construction using *Sweet's Catalog File*	
7. Fill in a VA-FHA "Description of Materials" form	

UNIT XIV: PRESENTATION DRAWINGS

	1. Terms and definitions
	2. Types of perspectives and perspective views
	3. Characteristics of perspectives and presentation drawings

JOB TRAINING: What the Worker Should Be Able to Do (Psychomotor)

7. Locate vanishing points
8. Draw a one-point perspective
9. Draw two-point perspectives
10. Shade and shadow various objects
11. Render an elevation
12. Render perspectives

RELATED INFORMATION: What the Worker Should Know (Cognitive)

4. Methods for drawing perspectives
5. Characteristics of shade, shadow, and texture
6. Rendering techniques

TOOLS, MATERIALS, AND EQUIPMENT LIST

I. Items needed by each student

A. Triangles
   1. 45°
   2. 30° 60°
B. Compass
C. Divider
D. Protractor
E. Irregular curve
F. Flexible curve
G. One of the following:
   1. Drafting machine with scales
   2. Parallel bar
   3. T-square with adjustable triangle
H. Drawing media
I. Drawing surface or table
J. Drafting tape
K. Drawing pencils
L. Pencil pointer
M. Lead holder
N. Lead
O. Lead pointer
P. Sandpaper pad
Q. Styrofoam point cleaner
R. Paper towel or cleaning cloth
S. Nonabrasive hand eraser
T. Lettering guide for guidelines
U. Erasing shield
V. Technical pens
W. Ink
X. Pen cleaning solution
Y. Grid paper
Z. Templates
   1. General purpose
   2. Architectural
AA. Scales
   1. Architectural
   2. Metric

II. Items which should be available in the classroom

A. Miscellaneous templates
B. Miscellaneous appliques
C. Other scales
   1. Civil engineer
   2. Mechanical engineer
D. *Sweet's Catalog File (Architectural)*
E. *Architectural Graphic Standards*
F. *HUD Minimum Property Standards*
G. Complete set of working drawings and specifications
H. Various materials for preparing renderings
   Example: Watercolors, felt tip markers, tempera

REFERENCES

Arnell, Alvin. *Standard Graphical Symbols.* New York: McGraw-Hill Book Co., 1963.

ASHRAE *Handbook of Fundamentals and Product Directory,* 1977.

Badzinski, Stanley Jr. *Stair Layout.* Chicago 60637: American Technical Society, 1974.

Brown, Walter C. *Bluepring Reading for Construction Residential and Commercial.* South Holland, IL 60473: Goodheart-Willcox Co., Inc., 1980.

Brown, Walter C. *Drafting for Industry.* South Holland, IL: Goodheart-Willcox Co., Inc., 1978.

Gebert, Kenneth L. *National Electrical Code Blueprint Reading.* Chicago 60637: American Technical Society, 1977.

Goodban, William T. and Jack J. Hayslett. *Architectural Drawing and Planning.* St. Louis: Gregg Division/McGraw-Hill Book Co., 1979.

Hepler, Donald E. and Paul I. Wallach. *Architecture Drafting and Design.* St. Louis: Gregg Division/McGraw-Hill Book Co., 1977.

Hornung, William J. *Architectural Drafting.* Englewood Cliffs, NJ: Prentice-Hall, Inc., 1966.

HUD Minimum Property Standards: One and Two Family Dwellings. Washington, D.C.: U.S. Department of Housing and Urban Development, 1973.

Kicklighter, Clois E. and Ronald J. Baird. *Architecture Residential Drawing and Design.* South Holland, IL 60473: Goodheart-Willcox Co. Inc., 1973.

Manual of Acceptable Practices to the HUD Minimum Property Standards. Washington, D.C.: U.S. Department of Housing and Urban Development, 1973.

Manual E, Room Air Distribution Considerations. Washington, D.C. 20036; The Air-Conditioning Contractors of America, 1965.

Manual G, Selection of Distribution System. Washington, D.C. 20036: The Air-Conditioning Contractors of America, 1963.

Manual J, Load Calculation for Residential Winter and Summer Air Conditioning. Washington, D.C. 20036: The Air-Conditioning Contractors of America, 1980.

Manual K, Equipment Selection and System Design Procedures. Washington, D.C. 20036: The Air Conditioning Contractors of America, 1975.

National Electrical Code, Boston: National Fire Protection Association, 1975.

Newman, Morton. *Standard Structural Details for Building Construction.* St. Louis: Gregg Division/McGraw-Hill Book Co., 1968.

Obermeyer, Thomas. *Architectural Technology*. St. Louis: Gregg Division/McGraw-Hill Book Co., 1976.

Ramsey, Charles G. and Harold R. Sleeper. *Architectural Graphic Standards*. New York: John Wiley & Sons, Inc., 1970.

Residential Fireplace and Chimney Details. McLean, VA: Brick Institute of America.

Sleeper, Harold R. *Architectural Specifications*. New York: John Wiley & Sons, Inc., 1967.

Southern Standard Building Code. Birmingham, AL: Southern Building Code Congress International, Inc., 1973.

Spence, William P. *Architecture Design - Engineering - Drawing*. Bloomington, IL: McKnight Publishing Co., 1979.

Stegmen, George K. and Harry J. Stegman. *Architectural Drafting*. Chicago 60637: American Technical Society, 1974.

Sweet's Catalog File. New York: McGraw-Hill Information Systems Co., 1981.

Uniform Plumbing Code. Los Angeles: Western Plumbing Officials Association, 1976.

Wakita, Osamu A. and Richard M. Linde. *The Professional Practice of Architectural Detailing*. New York: John Wiley & Sons, Inc., 1970.

Weidhaas, Ernest R. *Architectural Drafting and Construction*. Boston: Allyn and Bacon, Inc., 1974.

Willis, Charles D. *Blueprint Reading for Commercial Construction*. Albany, NY 12205: Delmar Publishers/Litton Educational Publishing, Inc., 1979.

Wyatt, William E. *General Architectural Drawing*. Peoria, IL 61614: Charles A. Bennett Co., Inc., 1969.

INTRODUCTION
UNIT I

UNIT OBJECTIVE

After completion of this unit, the student should be able to identify traditional and contemporary styles. The student should also be able to use reference materials and interview an architectural drafter. This knowledge will be evidenced by correctly performing the procedures outlined in the assignment sheets and by scoring 85 percent on the unit test.

SPECIFIC OBJECTIVES

After completion of this unit, the student should be able to:

1. Match terms related to architectural drafting with the correct definitions.
2. Identify fundamental structural systems.
3. Identify traditional styles.
4. Identify contemporary styles.
5. List architectural reference books.
6. Match architectural office phases with the correct characteristics.
7. Match job titles with the correct qualifications and responsibilities.
8. Demonstrate the ability to:
   a. Use architectural reference materials.
   b. Interview an architectural drafter.

INTRODUCTION
UNIT I

SUGGESTED ACTIVITIES

I. Provide student with objective sheet.

II. Provide student with information and assignment sheets.

III. Make transparencies.

IV. Discuss unit and specific objectives.

V. Discuss information and assignment sheets.

VI. View and discuss slides of va types of architecture (residential and commercial), or take a field trip to ide / types of architecture in your area.

VII. Discuss in detail the advantages and disadvantages of being an architectural drafter.

VIII. Invite speakers who have experience as architectural drafters, checkers, and designers to speak to the class about their jobs.

IX. Discuss the code of ethics that architectural professionals must follow.

X. Discuss the amount of time usually devoted to each of the architectural phases in Objective VI.

XI. Give test.

INSTRUCTIONAL MATERIALS

I. Included in this unit:

A. Objective sheet

B. Information sheet

C. Transparency masters

1. TM 1--Change Order
2. TM 2--Structural Systems
3. TM 3--Traditional Styles
4. TM 4--Traditional Styles (Continued)
5. TM 5--Contemporary Styles

D. Assignment sheets

1. Assignment Sheet #1--Use Architectural Reference Materials

2. Assignment Sheet #2--Interview an Architectural Drafter

E. Answers to assignment sheets

F. Test

G. Answers to test

II. References:

A. *Sweet's Catalog File.* New York: McGraw-Hill Information Systems Co., 1981.

B. Hepler, Donald E. and Paul I. Wallach, *Architecture Drafting and Design.* St. Louis: Gregg Division/McGraw-Hill Book Co., 1977.

C. *HUD Minimum Property Standards: One and Two Family Dwellings.* Washington, D.C.: U.S. Department of Housing and Urban Development, 1973.

D. Kicklighter, Clois E. and Ronald J. Baird. *Architecture Residential Drawing and Design.* South Holland, IL 60473: Goodheart-Willcox Co., Inc., 1973.

E. Obermeyer, Thomas. *Architectural Technology.* St. Louis: Gregg Division/ McGraw-Hill Book Co., 1976.

F. Spence, William P. *Architecture Design--Engineering--Drawing.* Bloomington, IL: McKnight Publishing Co., 1979.

G. Weidhaas, Ernest R. *Architectural Drafting and Construction.* Boston: Allyn and Bacon, Inc., 1974.

INTRODUCTION
UNIT I

INFORMATION SHEET

I. Terms and definitions

A. Architecture--The art or science of designing building structures, especially habitable buildings

(NOTE: Architectural design is greatly related to the movement of history. Advancements in mathematics and science have improved engineering techniques and materials; yet, skeleton-frame construction and bearing wall construction principles have been known for centuries.)

B. AIA--American Institute of Architects

C. NCARB--National Council of Architectural Registration Boards

D. OSHA--Occupational Safety and Health Administration

E. Working drawings--A set of drawings used to show the type and quantity of material to be used on a job, and how that job is to be completed

F. Revision--Any change to an approved drawing

G. Change order--Document authorizing approved changes to be made to the contract (Transparency 1)

H. Construction documents--Documents composed of all specifications and working drawings

I. Contract documents--A complete package of all working drawings and specifications with preface information and all addenda

J. Specifications--A detailed precise presentation concerning a set of working drawings of a building

K. Addendum--A supplement of all things added to a project

(NOTE: The plural of addendum is addenda.)

L. As builts--Drawing made after construction to reflect changes made during construction

M. Facade--Any face of a building given special architectural treatment

N. Lintel--A horizontal member spanning an opening usually carrying the weight of the load above the opening (post and beam)

(NOTE: See Transparency 2 for examples of lintel and the following terms.)

O. Corbel--A member projecting from within a wall and supporting weight

INFORMATION SHEET

P. Arch--A member usually composed of wedge-shaped blocks spanning an opening, each block supporting a share of the load locked by the keystone in the center

Q. Cohesive--A construction technique which employs materials which are shaped while soft and allowed to harden

(NOTE: Concrete is an application of this technique.)

R. Truss--A construction technique forming a rigid arrangement of comparatively short members used to span a wide space

II. Fundamental structural systems (Transparency 2)

A. Lintel

B. Corbel

C. Arch

D. Cohesive

E. Truss

III. Traditional styles (Transparencies 3 and 4)

A. English

(NOTE: These are asymmetrical with Tudor and Elizabethan variations. Walls are stone, brick, or stucco and are sometimes half-timbered.)

B. Georgian

(NOTE: These are symmetrical with stone or stucco walls. The style was named for English kings of the period from 1714 to 1760.)

C. Regency

(NOTE: This is similar to Georgian with finer lines and details such as long shutters and curved wall extensions. They usually have brick walls which are often painted white. George III was King of England at the time of the American Revolution. He was too old to rule, so his son was appointed "regent" to rule in his father's place. This style was named for that regent.)

D. Colonial

1. New England colonial

(NOTE: This style is a symmetrical, modified Georgian with narrow clapboard siding and vertical boards on corners to eliminate mitering.)

INFORMATION SHEET

2. Garrison

(NOTE: This is a variation of New England colonial with overhanging second story modeled after blockhouses used in forts.)

3. Southern colonial

(NOTE: This is two storied, columned, with a large flat porch, and is usually made of brick.)

4. Dutch colonial

(NOTE: This is stone with steeply pitched roof and slightly curved eaves.)

5. French colonial

(NOTE: This has a flat facade broken by fancy scrolled iron balconies; plastered fronts are usually tinted pink, yellow, or green.)

Example: French Quarter of New Orleans

E. Cape Cod

(NOTE: This is a shingled or clapboarded small house with steep gable roof.)

F. Spanish

(NOTE: This has low-pitched and tiled roof with adobe walls built around a patio.)

IV. Contemporary (non-traditional) styles (Transparency 5)

(NOTE: Non-traditional architecture is sometimes called functional or futuristic.)

A. Ranch

(NOTE: This is one floor with a rambling, informal plan.)

B. Split level

(NOTE: This has a half-flight of stairs.)

C. Modern

D. Solar

E. Earth shelter

F. Underground

INFORMATION SHEET

V. Architectural reference books

A. *Architectural Graphic Standards*

B. *Standard Graphical Symbols*

C. *Minimum Property Standards: One and Two Family Dwellings*

D. *Sweet's Catalog File* (Architectural)

(NOTE: There are three ways this reference can be used--by looking up the trade name, product, or firm name.)

VI. Characteristics of architectural office phases

A. Schematic design

1. Rough site diagram and floor plans

2. Estimate of possible construction costs

3. Statement of architect's design concept and engineering demands such as soil conditions, structural support, and HVAC

(NOTE: An architect tries not to use too much time or expense in this phase since ideas are often rejected.)

B. Design development

1. Refinement of ideas from schematic design phase in detail with precise line drawing, elevations, and specifications

2. Often has elaborate visual aids and color presentations to show clients what they're getting

3. Refined cost analysis

C. Construction document

1. Accurately describes materials including type, quality, and quantity so accurate bids can be submitted and contractor can assemble the building properly

2. Survey of existing site included in working drawings

3. Architectural, mechanical, electrical, and structural working drawings included

4. Bid specifications included which give information to bidder

a. Where and when to submit bid

b. Substitutions allowed

c. Insurance needed

INFORMATION SHEET

e. Successful completion of an in-company training program

(NOTE: In some companies this could be as long as one year as a trainee.)

2. Responsibilities

a. Prepares pictorial and working drawings

b. Makes tracings from architect's or designer's sketches

c. Establishes working relationship with other personnel

d. Dresses and acts in a manner acceptable to associates

(NOTE: Responsibilities vary with experience and ability.)

C. Designer

1. Qualifications

a. Associate degree in technical area

b. Minimum of five years drafting experience in a specialty area

c. Good work credentials

2. Responsibilities

a. Sketches plans

b. Designs

c. Details

D. Licensed architectural engineer

1. Qualifications

a. Degree in engineering (six years of college)

b. Successful completion of engineer in training (EIT) examination

c. Successful completion of apprenticeship under licensed engineer

d. Successful completion of practicing engineer (PE) examination for engineering specialty area

INFORMATION SHEET

2. Responsibilities

   a. Uses handbooks and reference materials to determine specifications and correct data concerning materials to be used

   b. Makes mathematical computations involving strength of structural materials

E. Licensed architect

1. Qualifications

   a. Degree in architectural area (six years of college)

   b. Successful completion of three year apprenticeship under licensed architect

   c. Successful completion of state examination for architects

      1) Theory

      2) Design problem

      (NOTE: These minimum qualifications may vary for various states and for various drafting positions.)

2. Responsibilities

   a. Uses handbooks and reference materials to determine specifications and correct data concerning materials to be used

   b. Makes job inspections

   c. Supervises subordinates

   (NOTE: Larger firms may have additional job titles such as checker, master or chief drafter, master or chief designer, computer-aided designer or drafter, and spec writer as well as others.)

Change Order

CHANGE ORDER

No. 1
Date 4-5-81

Project: RIVERSIDE APARTMENTS
425 North Riverside
Anytown, North Dakota

To: Myers Construction Co.
1600 Industrial Road
Anytown, North Dakota

Revised Contract Amount

Previous contract	$1,650,025.00
Amount of this order ~~(decrease)~~ (increase)	15,100.00
Revised contract	$1,665,125.00

The contract time is hereby (increased) ~~(decreased)~~ ~~(unchanged)~~ by 15 days.

This order covers the contract revision described below:

Install ceramic mosaic floor tile in all kitchens in place of vinyl floor covering specified. Tile shall be standard grade TCA 137.1 set with Dry-Set mortar ANSI A118.1. Installation shall conform to ANSI A108.5 for this method.

The work covered by this order shall be performed under and be part of the original construction contract.

Changes Approved

Lyndon Stiles
Owner

by Joe R. Myers
Contractor

Taylor and Taylor, Architects

by Samuel Matthew Taylor

Structural Systems

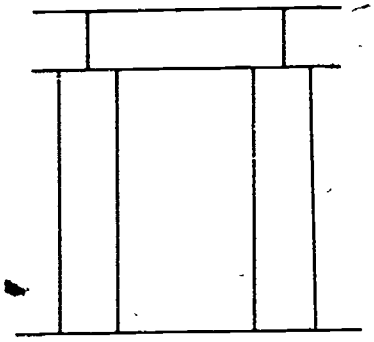

Lintel

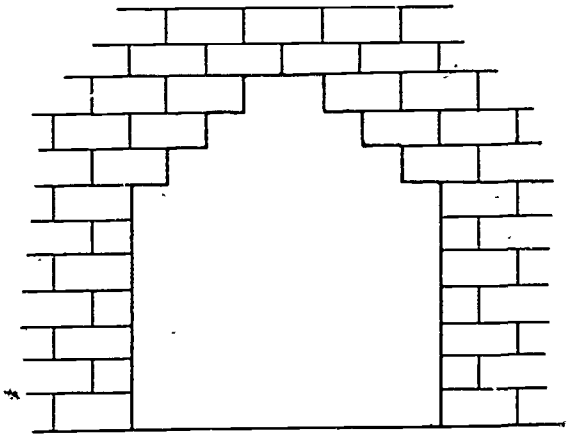

Corbel

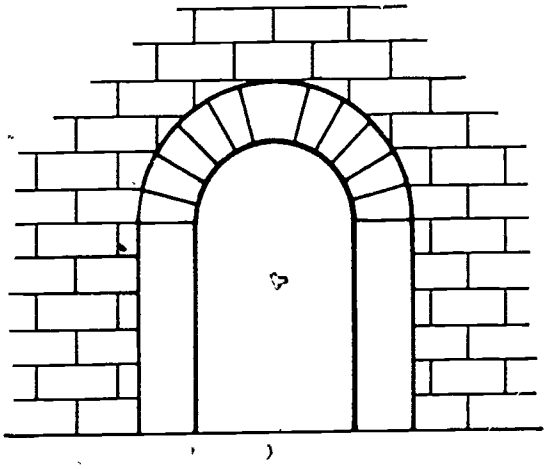

Arch

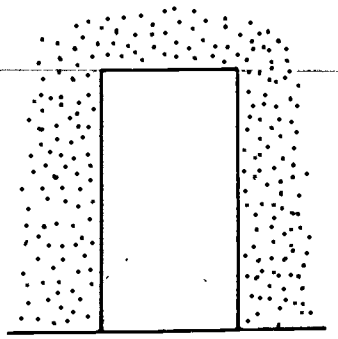

Cohesive

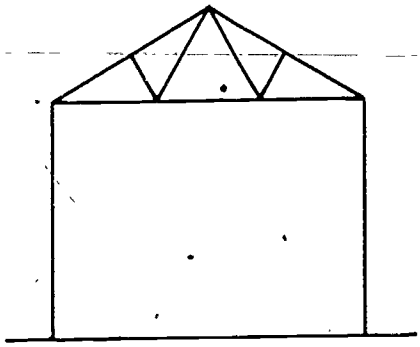

Truss

Traditional Styles

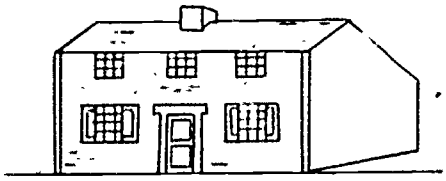

New England Colonial

English

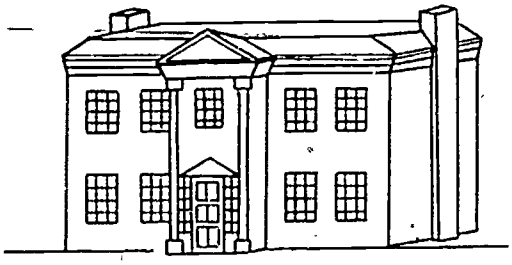

Georgian

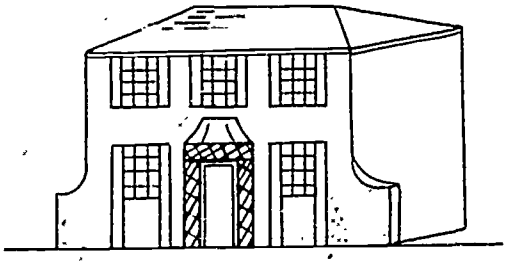

Regency

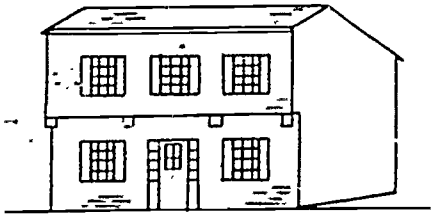

Garrison

Traditional Styles

(Continued)

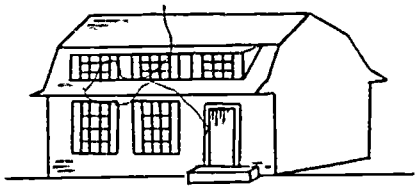

Dutch Colonial

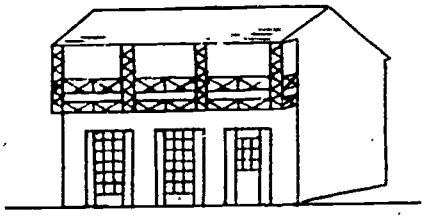

French Colonial

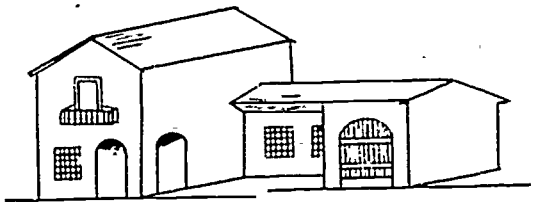

Spanish

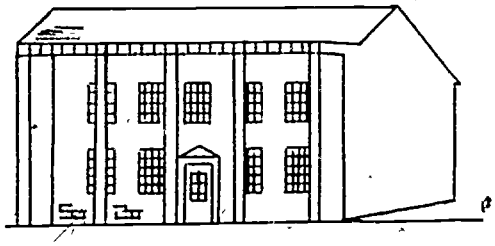

Southern Colonial

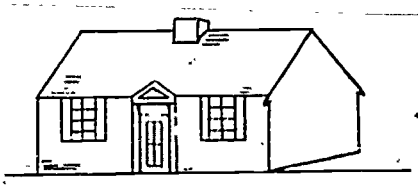

Cape Cod

Contemporary Styles

Modern

Ranch

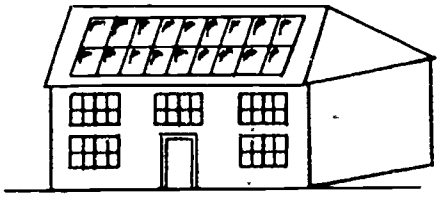

Solar

Split Level

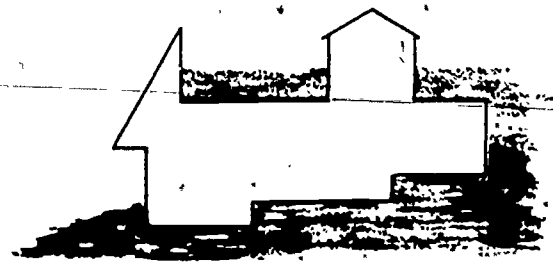

Earth Shelter

INTRODUCTION
UNIT I

ASSIGNMENT SHEET #1--USE ARCHITECTURAL REFERENCE MATERIALS

Directions: Use *Architectural Graphic Standards* to determine the sizes for the following items:

1. On spiral stairs with a 66" diameter, what is the size (O.D.) of the center pipe if made of steel or aluminum?

   _____

2. What is the minimum and maximum width for a freestanding front-loading automatic dryer?

   _____

3. On the termite infestation map of the U.S., in what region is New Mexico?

   _____

4. What is the ideal clearance between a kitchen range and the cabinets above it?

   _____

INTRODUCTION
UNIT I

ASSIGNMENT SHEET #2--INTERVIEW AN ARCHITECTURAL DRAFTER

Directions. Make an appointment with an architectural drafter who is presently employed in that capacity. Ask the following questions and record the answers in the blanks provided.

1. What is your career title? _____

2. What tasks do you perform on the job? _____

3. What education and occupational experience is required for this job? _____

4. What personality traits are most important in your field? _____

5. What skills and knowledge are required in this occupation? _____

6. What is the approximate starting salary of workers in your occupation? _____

7. What is the employment outlook for the future in this career? _____

8. What are the possibilities for advancement in this field? _____

ASSIGNMENT SHEET #2

9. What is your favorite part of this job? _____

_____

_____

10. What is your least favorite part of the job? _____

_____

_____

11. What is the dress code in your firm? _____

_____

_____

INTRODUCTION
UNIT I

ANSWERS TO ASSIGNMENT SHEETS

Assignment Sheet #1

(NOTE: *Architectural Graphic Standards,* Sixth Edition, 1970 was used for the following answers.)

1. Pg. 556, 5"
2. Pg. 426, Minimum 26 3/4"; Maximum 31 1/2"
3. Pg. 106, Region 2--Moderate to Heavy
4. Pg. 430, 30"

Assignment Sheet #2–Evaluated to the satisfaction of the instructor

INTRODUCTION
UNIT I

NAME _____

TEST

1. Match the terms on the right with the correct definitions.

_____a. The art or science of designing building structures, especially habitable buildings

_____b. American Institute of Architects

_____c. National Council of Architectural Registration Boards

_____d. Occupational Safety and Health Administration

_____e. A set of drawings used to show the type and quantity of material to be used on a job, and how that job is to be completed

_____f. Any change to an approved drawing

_____g. Document authorizing approved changes to be made to the contract

_____h. Documents composed of all specifications and working drawings

_____i. A complete package of all working drawings and specifications with preface information and all addenda

_____j. A detailed precise presentation concerning a set of working drawings of a building

_____k. A supplement of all things added to a project

_____l. Drawing made after construction to reflect changes made during construction

_____m. Any face of a building given special architectural treatment

_____n. A horizontal member spanning an opening usually carrying the weight of the load above the opening (post and beam)

_____o. A member projecting from within a wall and supporting weight

1. Facade
2. Lintel
3. Specifications
4. NCARB
5. Truss
6. AIA
7. Revision
8. Contract documents
9. Architecture
10. Change order
11. Working drawings
12. OSHA
13. Corbel
14. Cohesive
15. Addendum

_____p. A member usually composed of wedge-shaped blocks spanning an opening, each block supporting a share of the load locked by the keystone in the center

_____q. A construction technique which employs materials which are shaped while soft and allowed to harden

_____r. A construction technique forming a rigid arrangement of comparatively short members used to span a wide space

16. Construction documents

17. Arch

18. As builts

2. Identify the following fundamental structural systems.

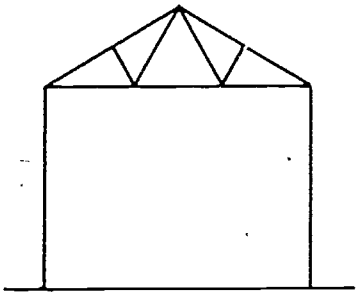

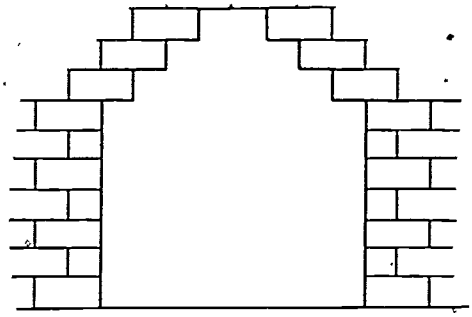

a. _____

b. _____

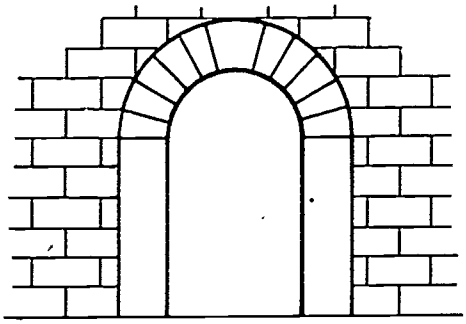

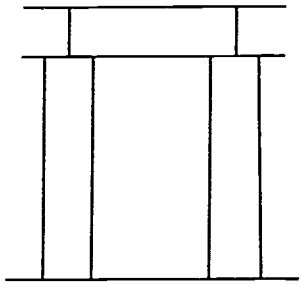

c. _____

d. _____

3. Identify the following traditional styles.

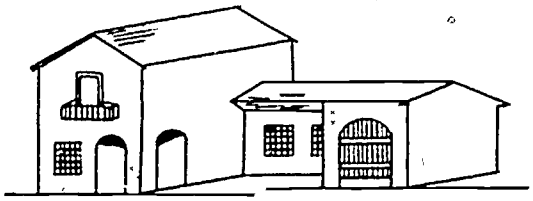

a. _____

b. _____

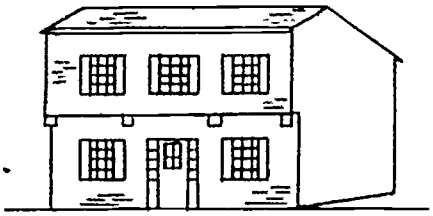

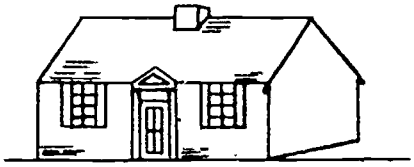

c. _____ d. _____

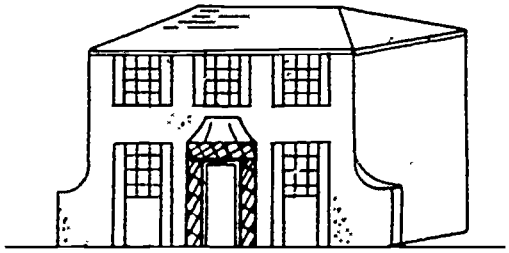

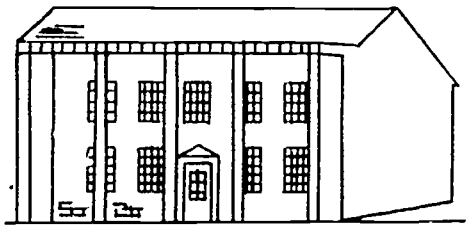

e. _____ f. _____

4. Identify the following contemporary styles.

a. _____ b. _____

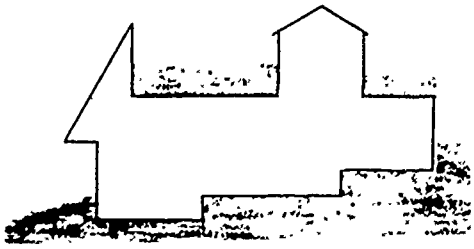

c. _____ d. _____

5. List two architectural reference books.

a. _____

b. _____

6. Match the architectural office phases on the right with the correct characteristics.

_____a. Architect/engineer makes inspections	1. Schematic design
_____b. In competitive bidding the owner has 30 days to check competency of contractor before signing contract	2. Design development
_____c. Refinement of ideas from schematic design phase in detail with precise line drawing, elevations, and specifications	3. Construction document
_____d. Rough site diagram and floor plans	4. Negotiation or bidding
_____e. Contractor/subcontractor conforms to OSHA standards on site	5. Construction
_____f. Accurately describes materials including type, quality, and quantity so accurate bids can be submitted and contractor can assemble the building properly	
_____g. Often has elaborate visual aids and color presentations to show clients what they're getting	
_____h. Architectural, mechanical, electrical, and structural working drawings included	
_____i. Negotiated sum may be more expensive	

7. Match the job titles on the right with the correct qualifications and responsibilities.

_____a. Degree in engineering	1. Drafter trainee
_____b. Associate degree in technical area and minimum of five years drafting experience in a specialty area	2. Drafter
_____c. High school diploma	3. Designer
_____d. Presently entered in the in-company training program	4. Licensed architectural engineer
_____e. Makes tracings from architect's or designer's sketches	5. Licensed architect
_____f. Degree in architectural area	

8. Demonstrate the ability to:

   a. Use architectural reference materials.

   b. Interview an architectural drafter.

   (NOTE: If these activities have not been accomplished prior to the test, ask your instructor when they should be completed.)

INTRODUCTION
UNIT I

ANSWERS TO TEST

1.

a.	9	g.	10	m.	1
b.	6	h.	16	n.	2
c.	4	i.	8	o.	13
d.	12	j.	3	p.	17
e.	11	k.	15	q.	14
f.	7	l.	18	r.	5

2. a. Truss
   b. Corbel
   c. Arch
   d. Lintel

3. a. Spanish
   b. English
   c. Garrison
   d. Cape Cod
   e. Regency
   f. Southern colonial

4. a. Modern
   b. Ranch
   c. Split level
   d. Earth shelter

5. Any two of the following:

   a. *Architectural Graphic Standards*
   b. *Standard Graphical Symbols*
   c. *Minimum Property Standards: One and Two Family Dwellings*
   d. *Sweet's Catalog File* (Architectural)

6.

a.	5	f.	3
b.	4	g.	2
c.	2	h.	3
d.	1	i.	4
e.	5		

7.

a.	4	d.	1
b.	3	e.	2
c.	1 or 2	f.	5

8. Evaluated to the satisfaction of the instructor

LETTERING AND TOOLS
UNIT II

UNIT OBJECTIVE

After completion of this unit, the student should be able to identify architectural styles of lettering, tools, and materials. The student should also be able to letter using various architectural styles. This knowledge will be evidenced by correctly performing the procedures outlined in the assignment sheets and by scoring 85 percent on the unit test.

SPECIFIC OBJECTIVES

After completion of this unit, the student should be able to:

1. Identify architectural styles of lettering.
2. Select true statements concerning the importance of good lettering.
3. Match the heights of architectural lettering with the correct uses.
4. Select true statements concerning architectural lettering hints.
5. Select types of lettering to be avoided.
6. Name types of lettering guides used in laying out lettering guidelines.
7. Match lettering instruments with the correct descriptions.
8. Identify tools and materials.
9. Demonstrate the ability to:
    a. Sharpen lead correctly.
    b. Letter using the Condensed style.
    c. Letter using the Extended style.
    d. Letter using the Variation style.
    e. Letter using the Kabel Modern style.
    f. Letter using the Chisel style.
    g. Letter using the Triangle style.
    h. Letter using the Shadow style.

LETTERING AND TOOLS
UNIT II

SUGGESTED ACTIVITIES

I. Provide student with objective sheet.

II. Provide student with information and assignment sheets.

III. Make transparencies.

IV. Discuss unit and specific objectives.

V. Discuss information and assignment sheets.

VI. Use file drawings to demonstrate examples of correct and incorrect lettering.

VII. Provide examples of a local company's drafting standards book.

VIII. Discuss why all lettering styles are not acceptable in architectural drafting.

IX. Demonstrate the use of architectural tools and equipment which may be new to the students, such as burnish plates, overlays, and architectural templates.

X. Have sales representatives give demonstrations on instruments available, such as the Kroy lettering machine.

XI. Discuss which lettering style is most common in your area, and have students spend extra time practicing on this style.

XII. Use unit test as a pre-test.

XIII. Give test.

INSTRUCTIONAL MATERIALS

I. Included in this unit:

A. Objective sheet

B. Information sheet

C. Transparency masters

1. TM 1--Architectural Styles of Lettering
2. TM 2--Architectural Styles of Lettering (Continued)
3. TM 3--Lettering Hints

4. TM 4--Lettering to be Avoided
5. TM 5--Types of Lettering Instruments
6. TM 6--Types of Lettering Instruments (Continued)
7. TM 7--Triangles
8. TM 8--Compasses
9. TM 9--Dividers
10. TM 10--Drafting Pencils
11. TM 11--Erasers and Cleaning Tools
12. TM 12--Parallel Bar
13. TM 13--Drafting Machines
14. TM 14--Scales
15. TM 15--Miscellaneous Tools and Equipment
16. TM 16--Rubber Stamps, Appliques, and Tape
17. TM 17--Burnish Plates and Grid Paper
18. TM 18--Underlays and Overlays
19. TM 19--Templates

D. Assignment sheets

1. Assignment Sheet #1--Sharpen Lead Correctly
2. Assignment Sheet #2--Letter Using the Condensed Style
3. Assignment Sheet #3--Letter Using the Extended Style
4. Assignment Sheet #4--Letter Using the Variation Style
5. Assignment Sheet #5--Letter Using the Kabel Modern Style
6. Assignment Sheet #6--Letter Using the Chisel Style
7. Assignment Sheet #7--Letter Using the Triangle Style
8. Assignment Sheet #8--Letter Using the Shadow Style

E. Test

F. Answers to test

II. References:

A. Goodban, William T. and Jack J. Hayslett. *Architectural Drawing and Planning.* St. Louis: Gregg Division/McGraw-Hill Book Co., 1979.

B. Hepler, Donald E. and Paul I. Wallach. *Architecture Drafting and Design.* St. Louis: Gregg Division/McGraw-Hill Book Co., 1977.

C. Kicklighter, Clois E. and Ronald J. Baird. *Architecture Residental Drawing and Design.* South Holland, IL 60473: Goodheart-Willcox Co., Inc., 1973.

D. Obermeyer, Thomas. *Architectural Technology.* St. Louis: Gregg Division/McGraw-Hill Book Co., 1976.

E. Spence, William P. *Architecture Design - Engineering - Drawing.* Bloomington, IL: McKnight Publishing Co., 1979.

F. Wakita, Osamu A. and Richard M. Linde. *The Professional Practice of Architectural Detailing.* New York: John Wiley & Sons, Inc., 1970.

G. Weidhaas, Ernest R. *Architectural Drafting and Construction.* Boston: Allyn and Bacon, Inc., 1974.

LETTERING AND TOOLS
UNIT II

INFORMATION SHEET

I. Architectural styles of lettering (Transparencies 1 and 2)

(NOTE: Lettering is to conform to the office standards used.)

A. Condensed

B. Extended

C. Variation

D. Kabel Modern

E. Chisel

F. Triangle

G. Shadow

(NOTE: Shadow is used only to indicate street names on large site plans so names will stand out.)

II. Importance of good lettering

A. Since approximately 20% of a drafter's time is used in lettering, neat lettering conserves time and money for the individual and the company

B. Lettering can greatly affect the overall appearance of a drawing

C. Most drawings are reproduced; therefore, the lettering must be done with neatness, accuracy, speed, legibility, and be a dense black

D. The letters must be formed very carefully and not crowded together or they will run together when reproduced

E. Good lettering and line quality help the student to obtain the first job

(NOTE: Many companies require a separate lettering sample or that their application be lettered as a sample.)

III. Heights of architectural lettering and uses

A. 1/4"--Used in title blocks and project name

B. 3/16"--Used in titles of plans, elevations, sections, and details

C. 1/8"--Used in all notes and other lettering

(NOTE: Sometimes 3/32" is used rather than 1/8" for notes and other lettering.)

INFORMATION SHEET

IV. Architectural lettering hints (Transparency 3)

A. It is more difficult to do 1/4" letters than 1/8" because of the area involved

(NOTE: Use 3" x 5" unruled file cards and draw light guidelines 1/4" in height, and practice alphabet, numerals, words, sentences, and paragraphs.)

B. To develop neatness, accuracy, speed, and legibility, print everything when possible, such as class notes and personal letters

C. In order to make the vertical portion of the letter straight, use a triangle as a "crutch"

(NOTE: This is especially important if you have a tendency to incline your letters.)

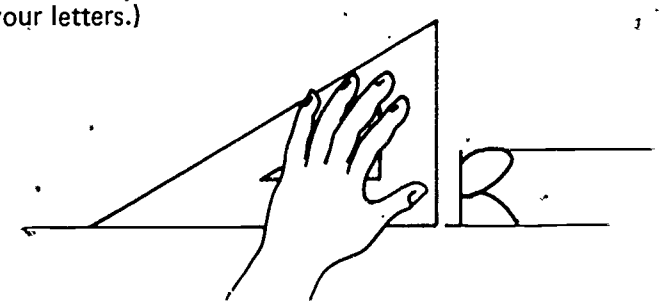

(CAUTION: Use care not to smudge lettering when using a triangle.)

D. Lettering on a drawing should look like one person did it, regardless of how many people actually did the lettering on the drawing

E. Letters should be in proportion and stable

(NOTE: They should not be top heavy or unstable.)

Example: HANDRAIL (Poor) HANDRAIL (Good)

Proportion

BCE2358 (Poor) BCE2358 (Good)

Stability

F. Gothic lettering should be mastered before even attempting architectural lettering

G. Letter shapes should not be changed

(NOTE: Stylizing lettering must never be interpreted as an excuse to over-decorate.)

INFORMATION SHEET

H. The strokes of letters may be emphasized by pointing the terminal portion

I. All lettering must be consistent around a vertical line

Example: PLYWOOD PLYWOOD
(Poor) (Good)

J. Practice good spacing because poor spacing will destroy even the best looking lettering; spacing should be visually equal

Example: P LY·W OOD
(Poor)

K. Light guidelines should always be drawn and used to the fullest

Example: PLYWOOD PLYWOOD
(Poor) (Good)

(NOTE: Unless otherwise instructed, guidelines should be drawn in such a way that they will not print when reproduced; when drawn, they should not be visible when drawing is held at arm's length.)

L. Select one accepted architectural lettering style of your choice and practice it until you have mastered it

M. When making the strokes of a letter, do each stroke quickly instead of slowly, but take your time between each stroke and letter until you have mastered each letter

N. Fractions should be 1 2/3 the height of a whole number; the numerator and denominator should be 2/3 the height of the whole number

(NOTE: Fraction bar can be slanted.)

O. Lettering should be the last thing done to a drawing to avoid smudges

P. Lettering should be dark enough to reproduce properly

Q. If drawings are to be microfilmed, lettering sizes should follow standards

V. Lettering to be avoided (Transparency 4)

A. Uppercase mixed letter sizes

B. Accented letters

C. Lowercase vertical letters

D. Inclined uppercase letters

E. Inclined lowercase letters

INFORMATION SHEET

F. Script uppercase letters

G. Script lowercase letters

H. Thick and thin

VI. Types of lettering guides used in laying out lettering guidelines

A. Braddock Rowe triangle

B. Ames type lettering guide

C. Parallelograph

VII. Lettering instruments and descriptions (Transparencies 5 and 6)

A. Lettering instrument--An instrument consisting of a template, a scriber, and an inking pen or pencil

B. Varigraph--A device for making a wide variety of either single stroke or "built-up" letters

C. Letter guide--An instrument much like the varigraph but simpler which also makes a large variety of styles and sizes of letters

D. VariTyper--An instrument that looks like a typewriter with an open-ended carriage which uses a one-time carbon ribbon

(NOTE: The open-ended carriage allows the use of various size drawings. Hundreds of instantly changeable typefaces are available for the VariTyper.)

E. Template--A thin, flat sheet of plastic with letters cut through the sheet

F. Lettering machine--A machine that produces "type on tape"

(NOTE: The transparent tape can be attached directly to the surface of a drawing.)

G. Appliques (pressure-sensitive transfer sheets)--Prepared lettering sheets which come in many different lettering styles and sizes

(NOTE: These are usually of a wax base, and caution must be used when near heat.)

VIII. Tools and materials

A. Triangles (Transparency 7)

1. 30° 60°

2. 45°

3. Adjustable

INFORMATION SHEET

B. Compasses (Transparency 8)

1. Friction
2. Beam
3. Bow

C. Dividers (Transparency 9)

1. Friction
2. Bow
3. Proportional

D. Pencils (Transparency 10)

1. Wooden cased drawing pencil
2. Mechanical pencil (lead holder)
3. Thin lead mechanical pencil

E. Erasers and cleaning tools (Transparency 11)

1. Erasers
2. Erasing shield
3. Cleaning pad
4. Dusting brush
5. Electric eraser
   a. Cord
   b. Cordless

F. Parallel bar (Transparency 12)

G. Drafting machines (Transparency 13)

1. Elbow drafting machine
2. Track drafting machine

H. Scales (Transparency 14)

1. Architect
2. Civil Engineer

INFORMATION SHEET

3. Metric

4. Decimal

I. Protractor (Transparency 15)

J. Irregular curve (Transparency 15)

K. Lead pointer (Transparency 15)

L. Flexible curve (Transparency 15)

M. Rubber stamps (Transparency 16)

N. Appliques (Transparency 16)

O. Pressure-sensitive tape (Transparency 16)

P. Grid paper (Transparency 17)

~~Q. Burnish-plates (Transparency 17)~~

(NOTE: This underlay device has raised lines where lines are needed. A pencil is the burnishing tool which transfers the symbol onto the drawing. This is used mostly for roofing, siding, trees, and bricks.)

R. Underlays (Transparency 18)

(NOTE: Parts of a drawing that are used often such as letters, symbols, fixtures, or guidelines are drawn on pieces of media, and then placed under the original and traced.)

S. Overlays (Transparency 18)

(NOTE: These are transparent sheets placed over the drawing. Temporary overlays are used mostly during the design process to achieve the final location of an object. A permanent overlay is permanently secured to the original.)

T. Templates (Transparency 19)

1. Floor plan

(NOTE: These are available in 1/4" and 1/8" scale.)

2. Plumbing

a. Plan view

b. Elevation view

INFORMATION SHEET

3. Furniture

4. Landscape

5. Stair calculator

(NOTE: There are many templates other than the ones listed that you will be using, but you should already be acquainted with general purpose templates.)

Architectural Styles of Lettering

CONDENSED

ABCDEFGHIJKLMNOPQRS

TUVWXYZ &1234567890

EXTENDED

ABCDEFGHIJKLMNO

PQRSTUVWXYZ &

1234567890 ½ ¾

VARIATION

ABCDEFGHIJKLMNOPQR

STUVWXYZ123456789

KABEL MODERN

ABCDEFGHIJKLMNOPQRST

UVWXYZ & 1234567890

CHISEL

ABCDEFGHIJKLMNOPQ

RSTUVWXYZ 123456789

Architectural Styles of Lettering

(Continued)

TRIANGLE

ABCDEFGHIJKLMNOPQR
STUVWXYZ 1234567890

ABCDEFGHIJKLMNOPQRSTUVWXYZ
1234567890

ABCDEFGHIJKLMNOPQRSTUVWXYZ
1234567890

SHADOW

ABCDEFGHIJKLM
NOPQRSTUVWX
YZ 1234567890

Lettering Hints

LETTERS NOT UNIFORM IN HEIGHT	UNIFORM
LETTERS ARE NOT VERTICALLY UNIFORM	UNIFORM
LETTERS NOT UNIFORM IN STROKE THICKNESS	UNIFORM
AREAS ARE NOT UNIFORM BETWEEN LETTERS	UNI FOR M
STYLE OF LETTERS IS NOT UNIFORM	UniFoRm
AREAS ARE NOT UNIFORM BETWEEN WORDS	LETTERING SHOULD BEUNIFORM
UNIFORM LETTERING	UNIFORM

Lettering Stability

TOP-HEAVY LETTERS

CORRECT LETTERS

Lettering To Be Avoided

MIXED LETTER SIZES

ACCENTED LETTERS

lowercase letters

INCLINED

ABCDEFGHIJKLMNOPQR

STUVWXYZ 123456789

Script

ABCDEFGHIJKLMNO

PQRSTUVWXYZ 123456

abcdefghijklmnopqrstuvwxyz

THICK & THIN

ABCDEFGHIJKLMNOPO

RSTUVWXYZ 123456789

Types of Lettering Instruments

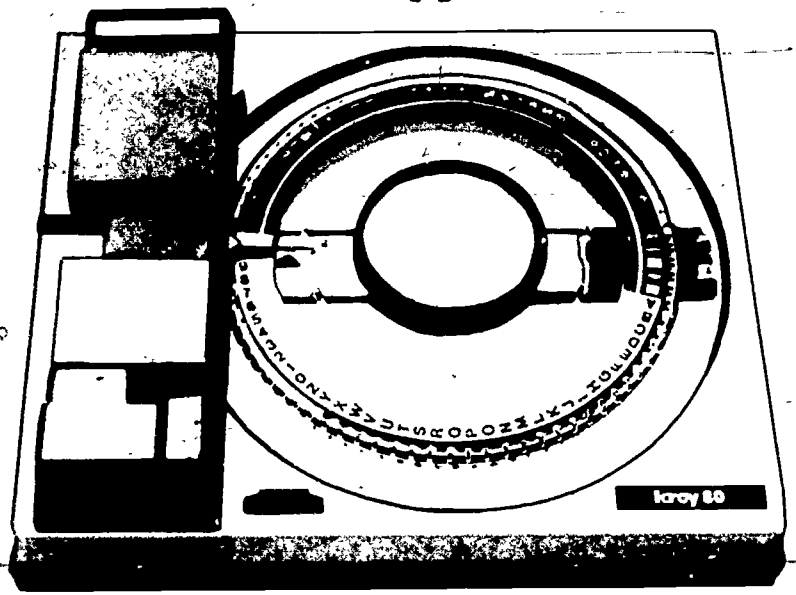

Lettering Machine

(NOTE: This lettering machine is available in either manual or electric.)

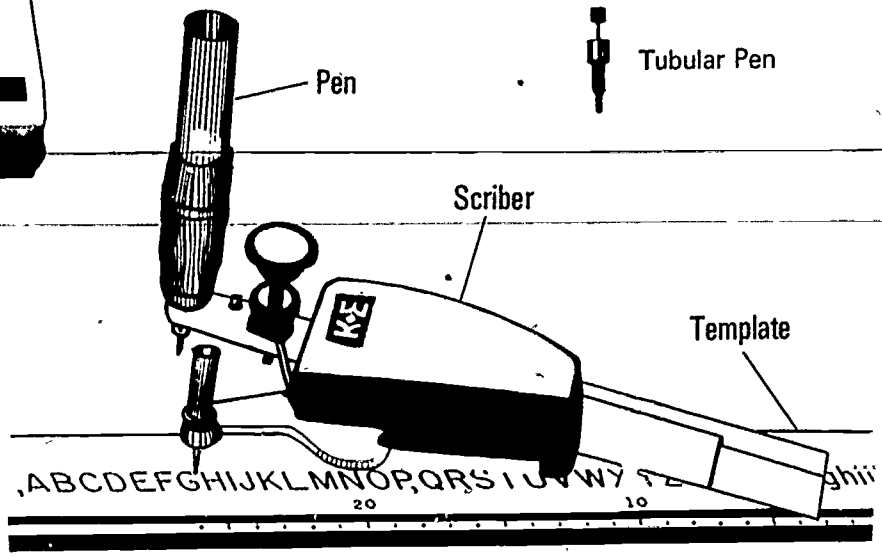

Lettering Instrument

(NOTE: The Leroy lettering instrument is a common type.)

Types of Lettering Instruments

(Continued)

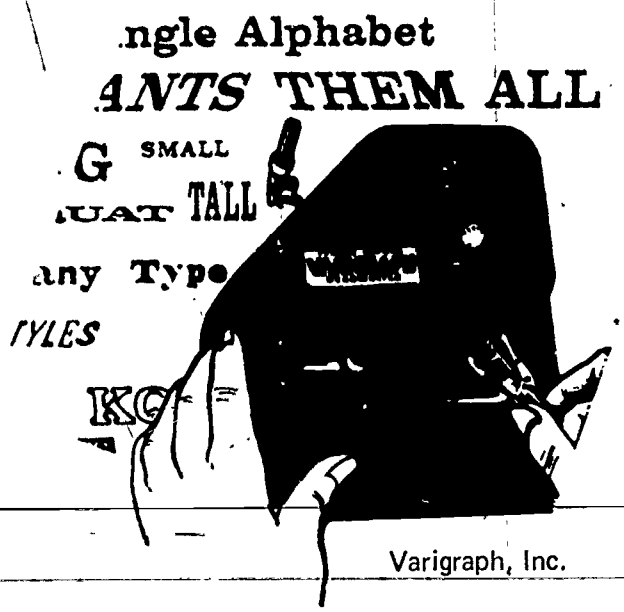

Varigraph, Inc.

Varigraph, Italic Model Headwriter

VariTyper Corporation

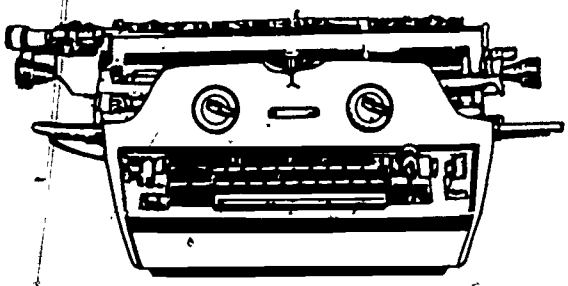

VariTyper Office Composing Machine, Model 660

Courtesy Letterguide

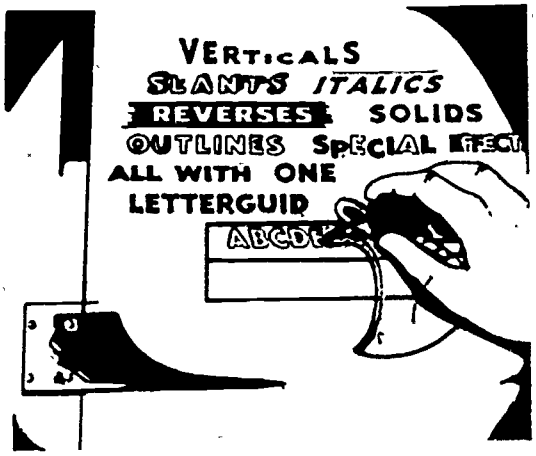

Letterguide

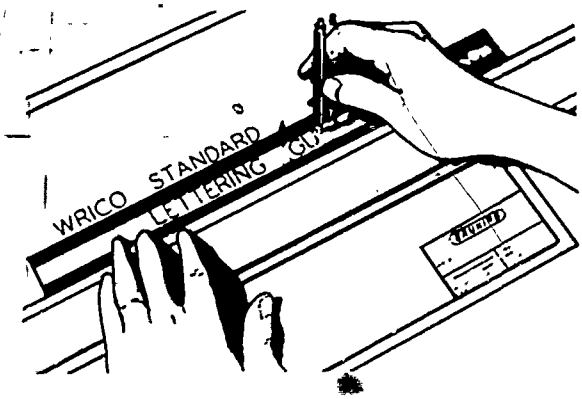

Template

Triangles

Adjustable Triangle

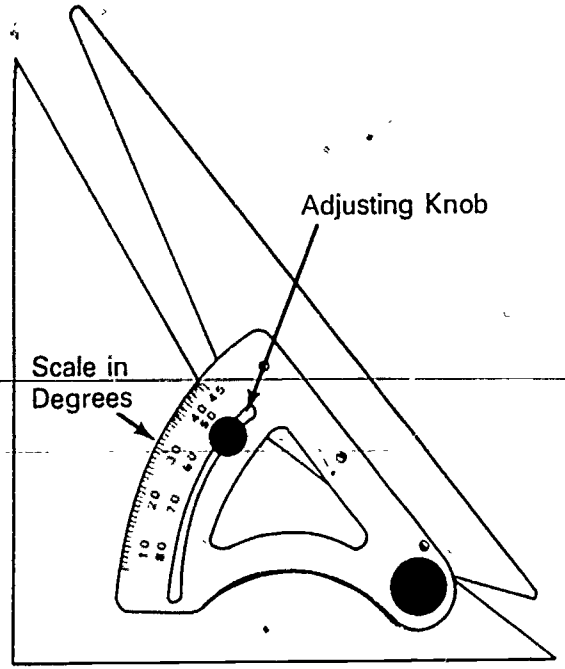

Standard Triangles

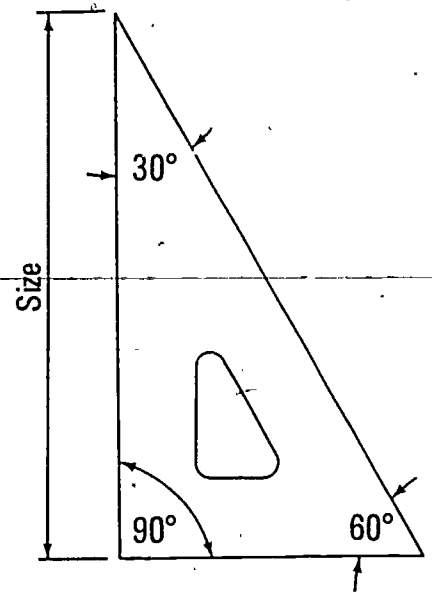

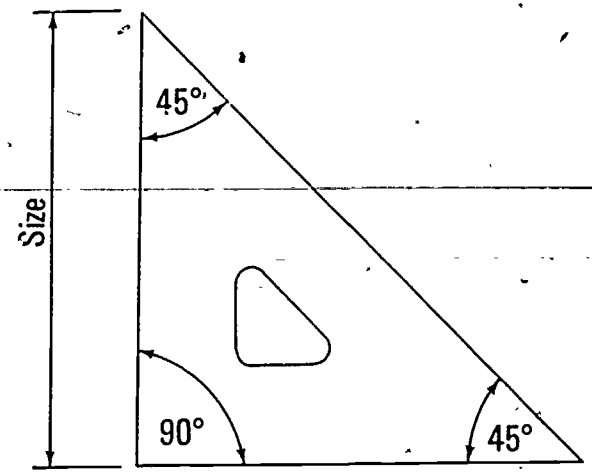

NOTE: In Closed Position
Triangle forms Standard 45° Triangle

Compasses

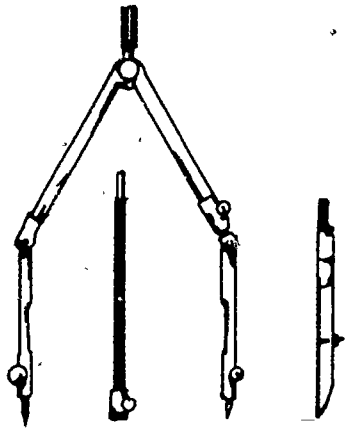

Compass, Lengthening Bar, Pen Attachment

Friction Compass

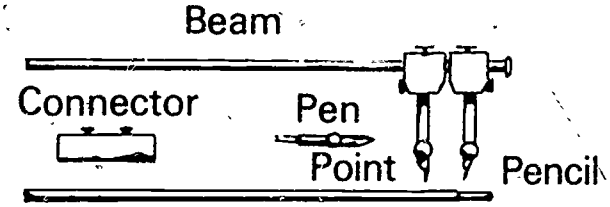

Beam Compass

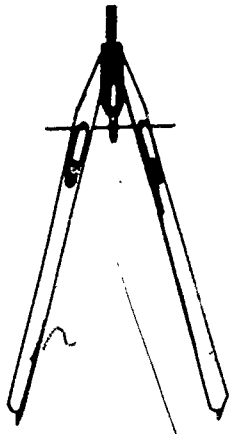

Jet Bow Compass

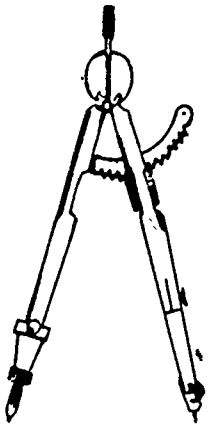

Ratchet Bow Compass

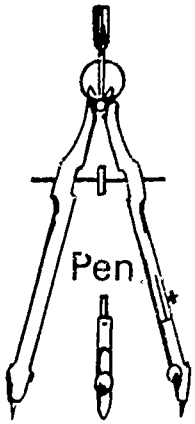

Bow Compass or Divider

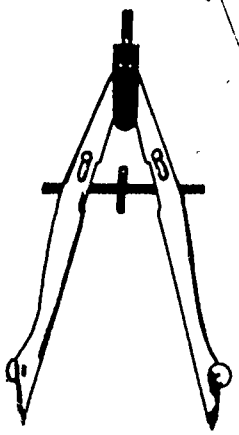

Speed Bow Compass

Drop Spring Bow Compass

Dividers

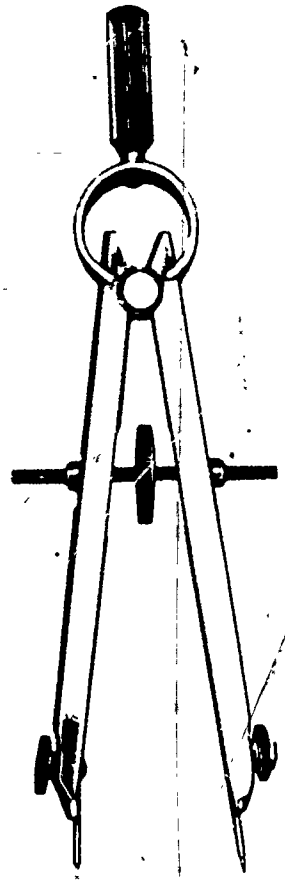

Bow Divider

Friction Divider

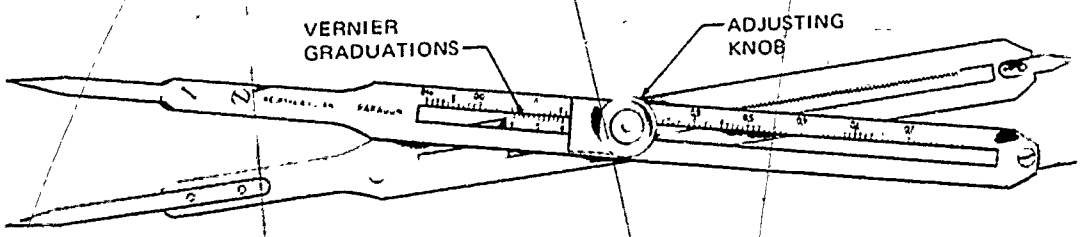

Proportional Divider

Drafting Pencils

Wooden Cased Pencil

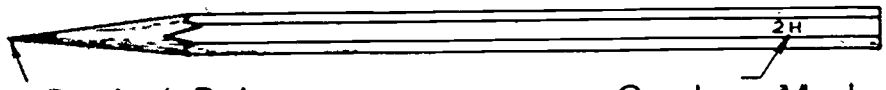

Sharp Conical Point

Grade Mark

For General Linework and Lettering

Do Not Sharpen This End

Mechanical Pencil

Drafting Pencil Leads

Available in All Grades

Thin Lead Mechanical Pencil

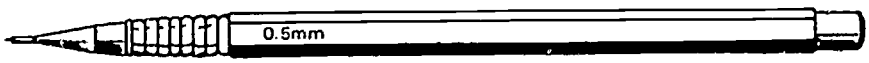

Thin Leads Require no Sharpening

Erasers and Cleaning Tools

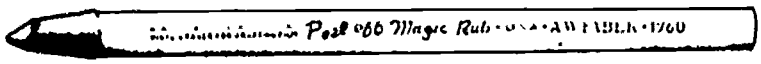

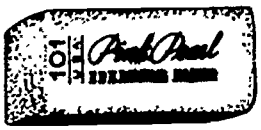

Erasers

Keuffel and Esser C

Frederick Post Co

Electric Eraser

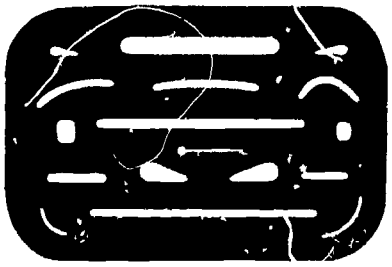

Keuffel and Esser Co

Erasing Shield

Frederick Post C

Cleaning Pad

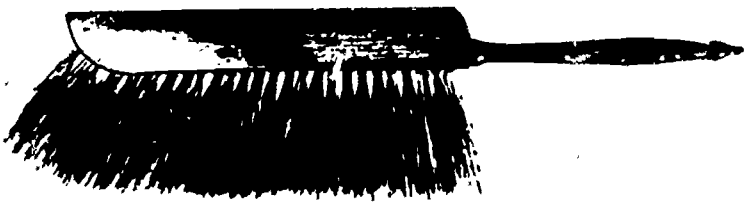

Dusting Brush

Parallel Bar

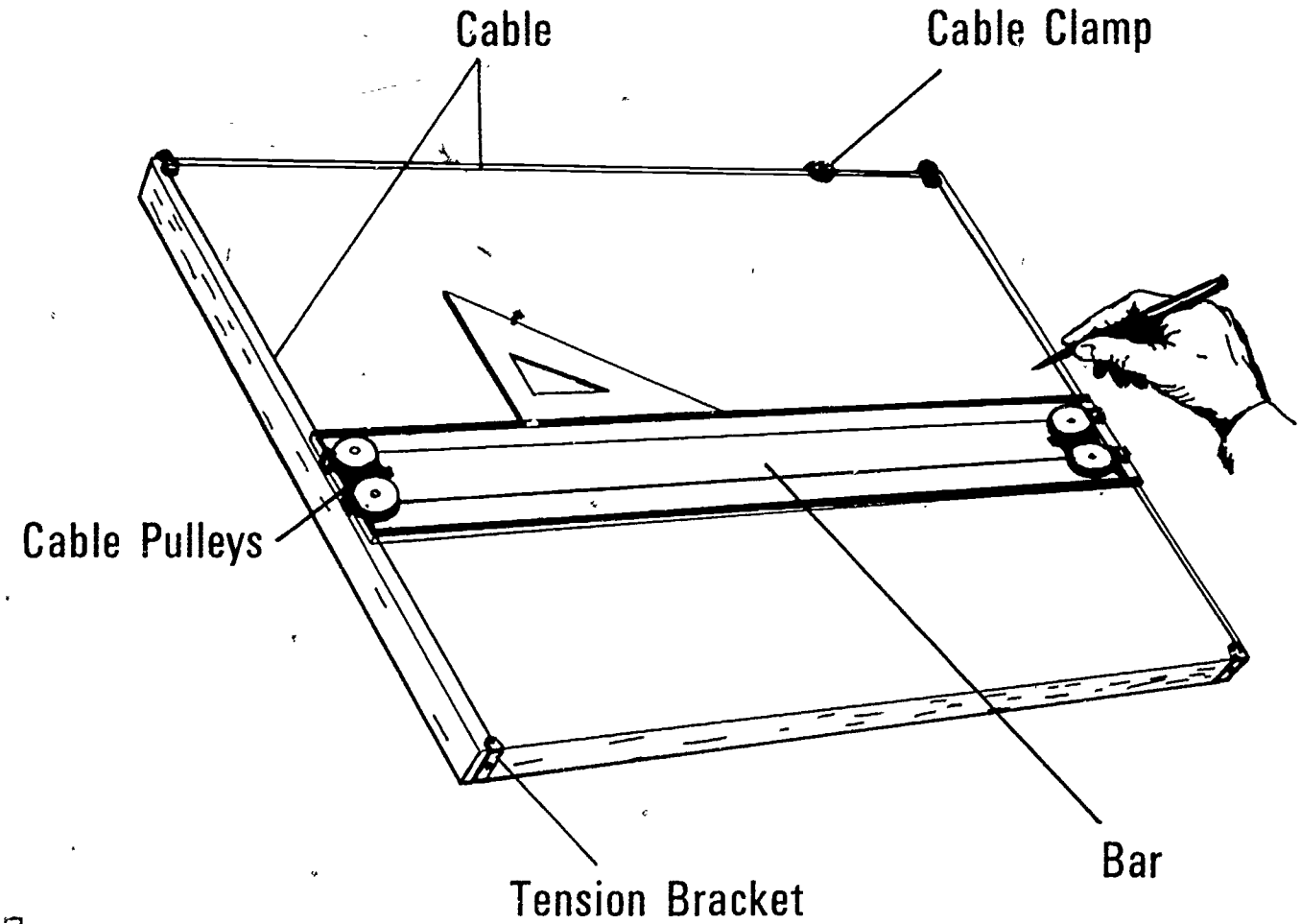

Drafting Machines

Track

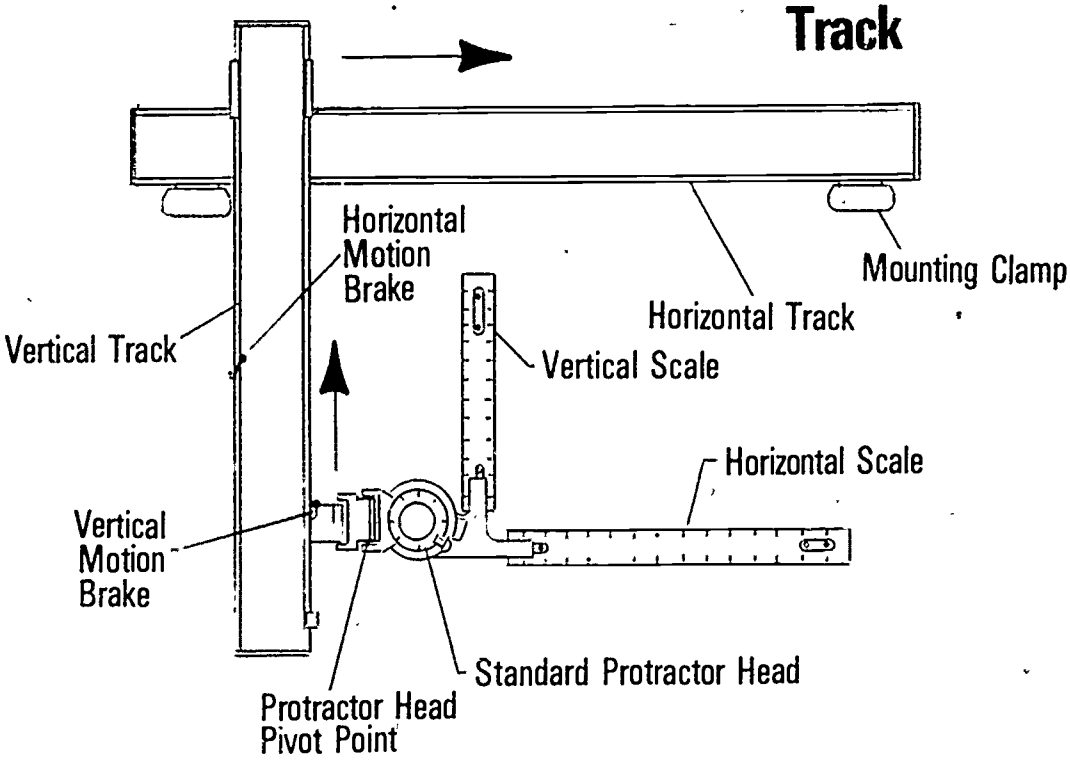

Elbow

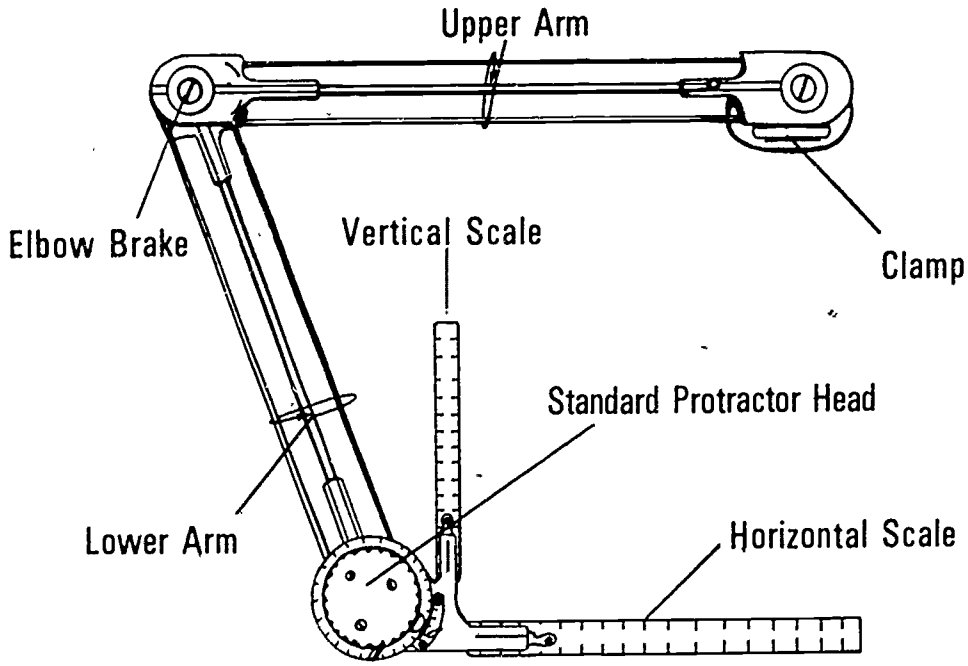

Scales

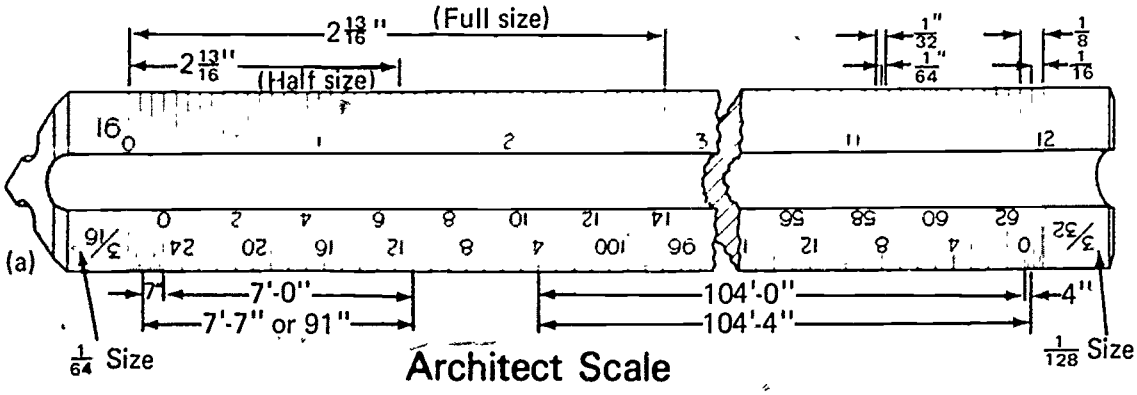

Architect Scale

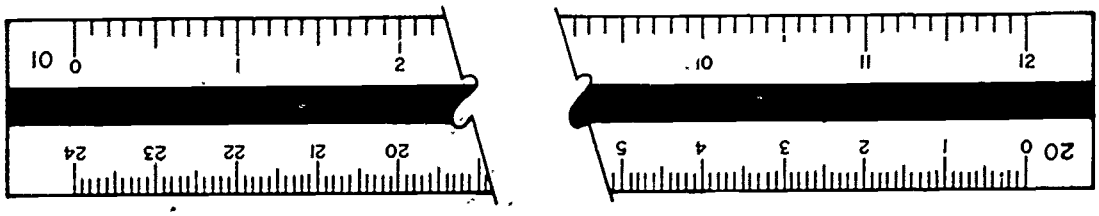

Civil Engineer Scale

Scale:1"=10'

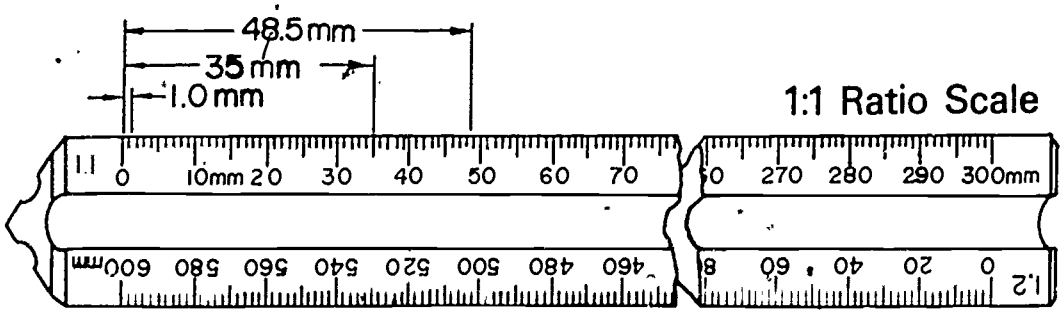

Metric Scale

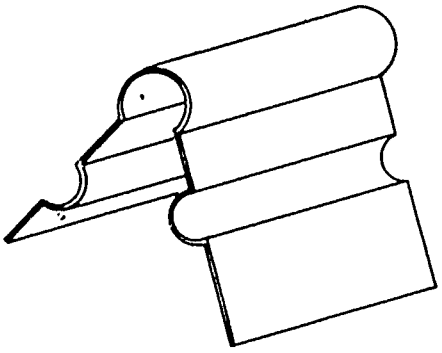

Scale Clip

Miscellaneous Tools and Equipment

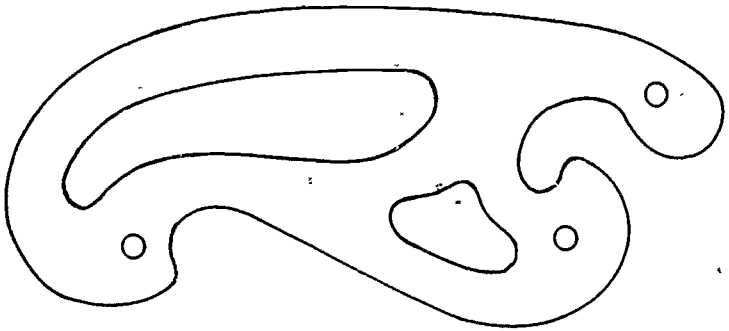

Irregular Curve

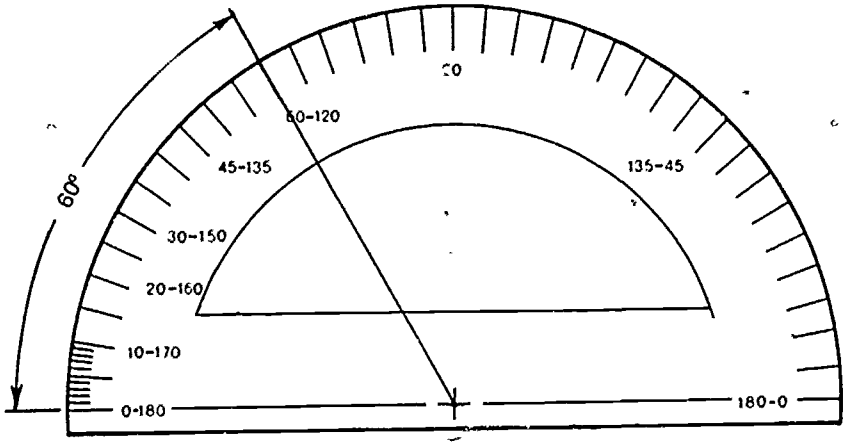

Protractor

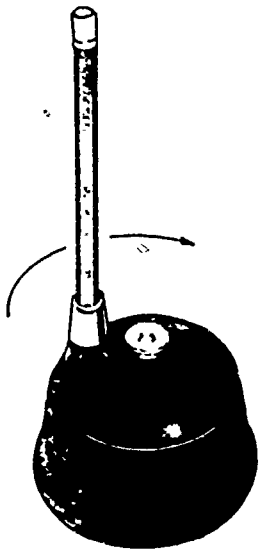

Lead Pointer

Weights

Flexible Curve

Rubber Stamps, Appliques, and Tape

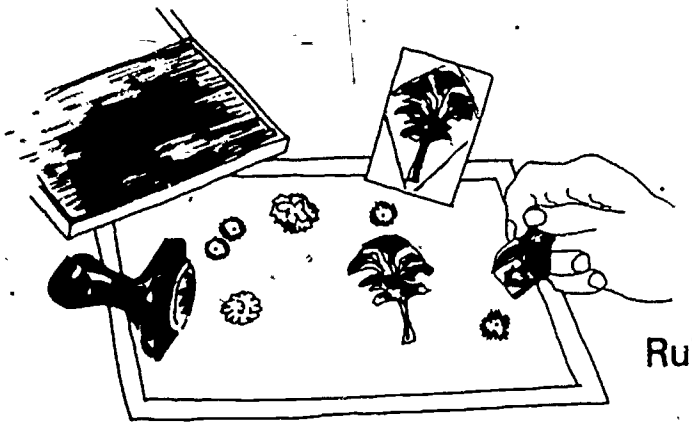

Rubber Stamps

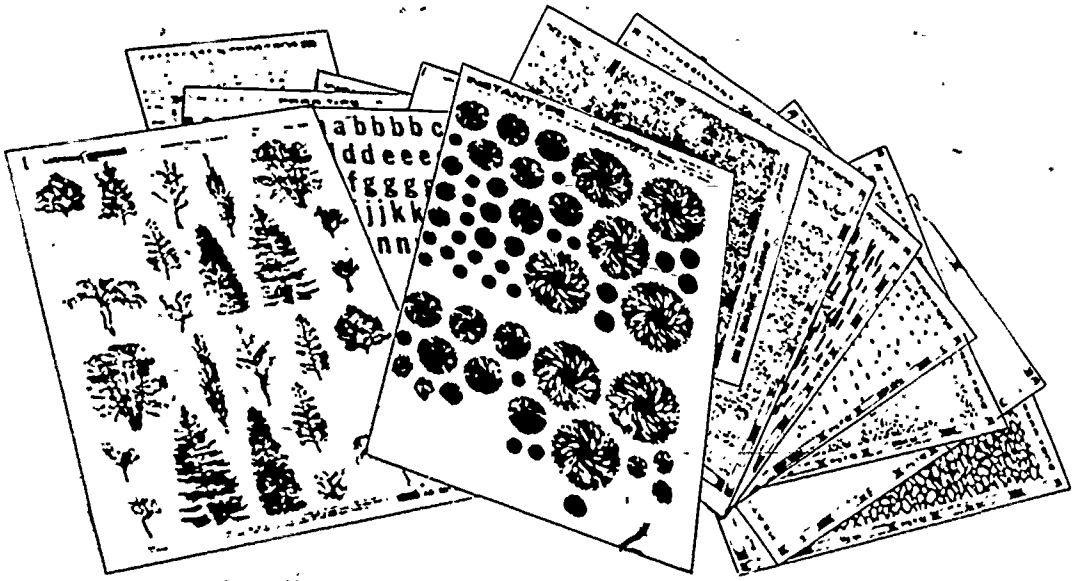

Appliques

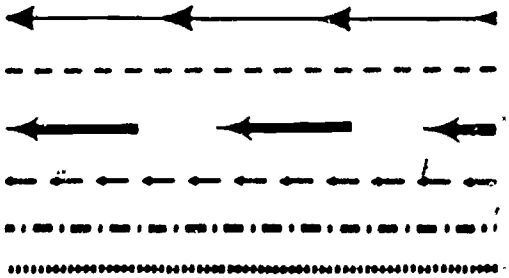

Pressure Sensitive Tape

Burnish Plates and Grid Paper

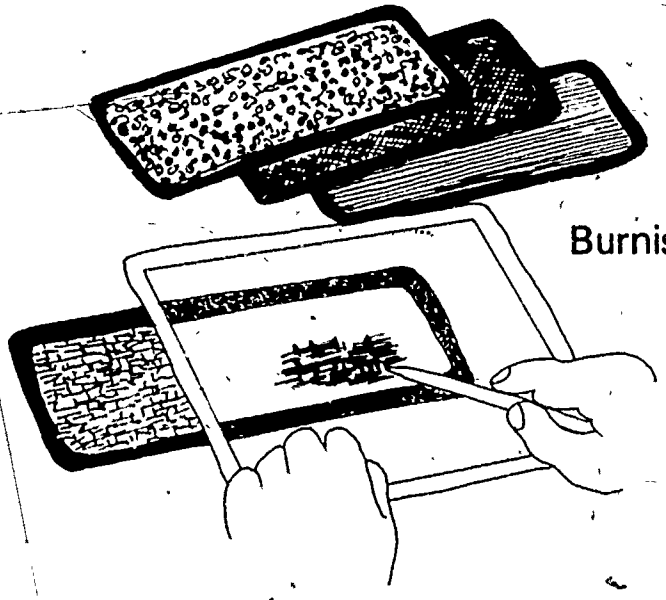

Grid Paper

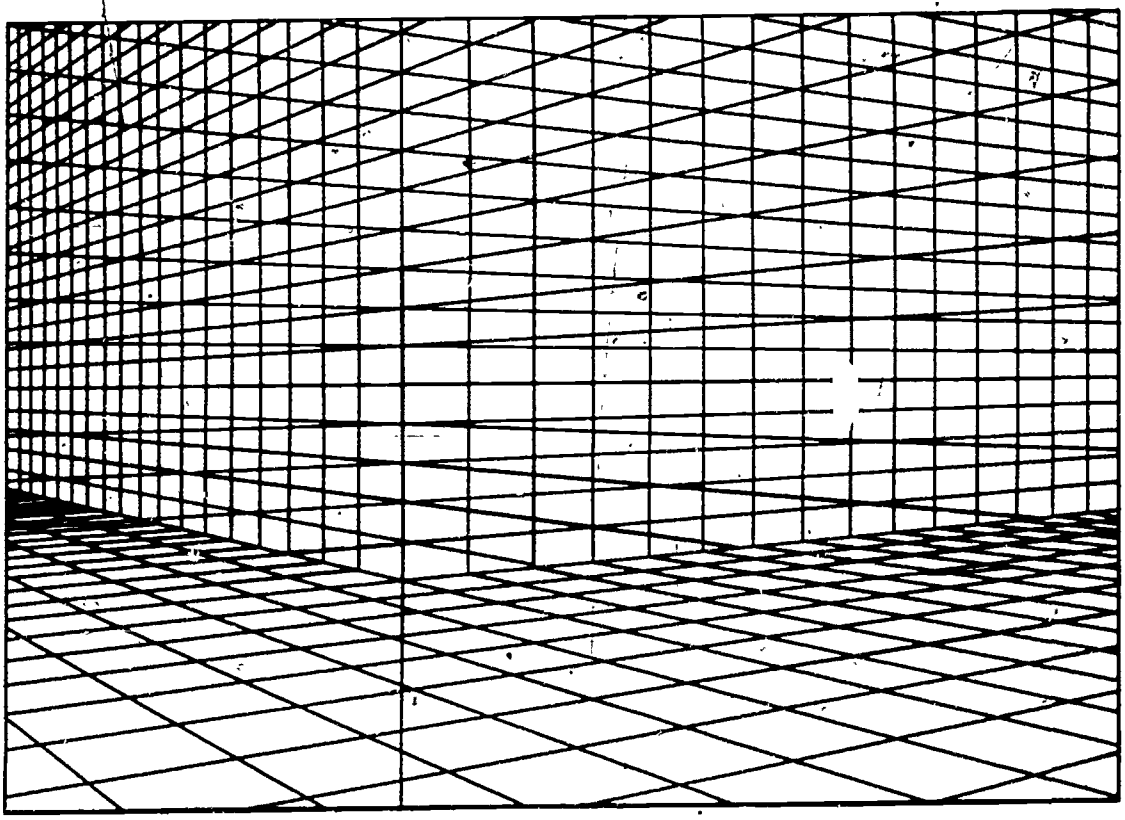

Underlays and Overlays

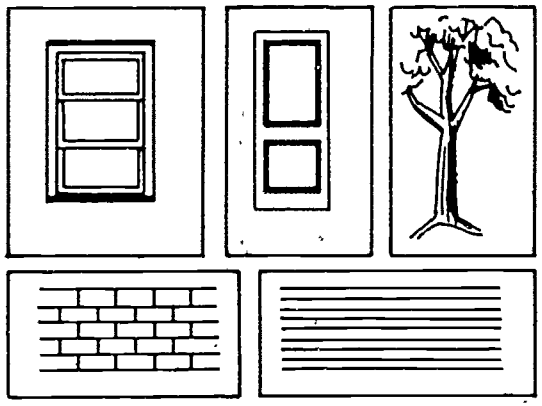

Commonly Used Underlays

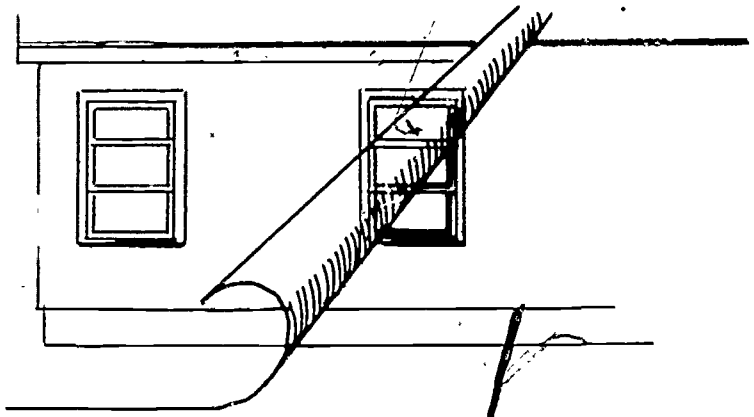

Using Underlays

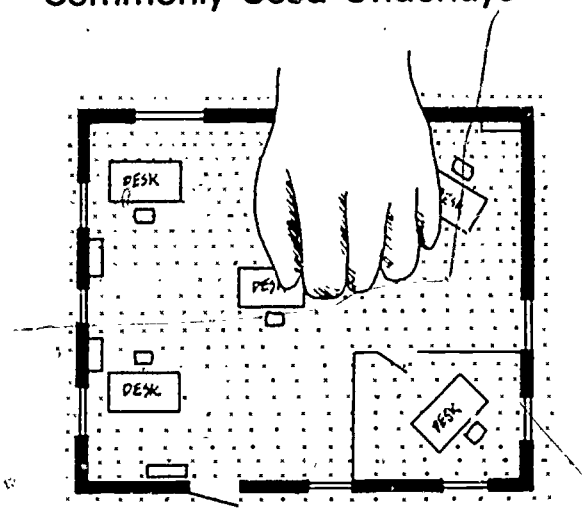

Using Overlays

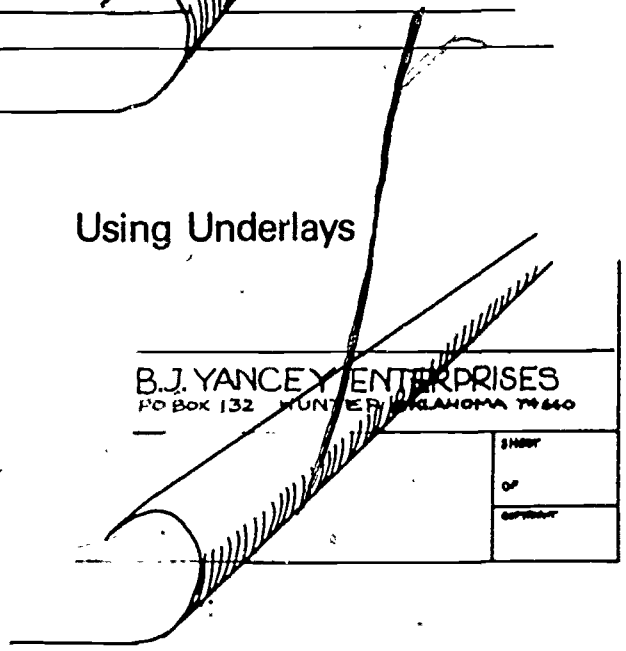

Templates

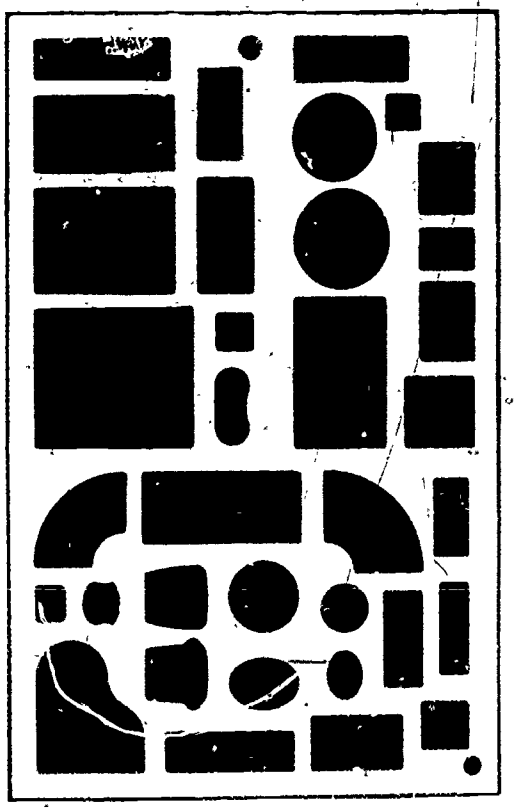

Home Furnishing

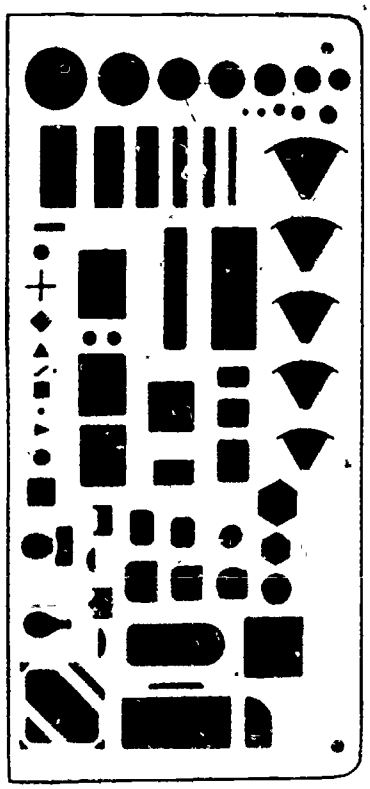

Architectural template

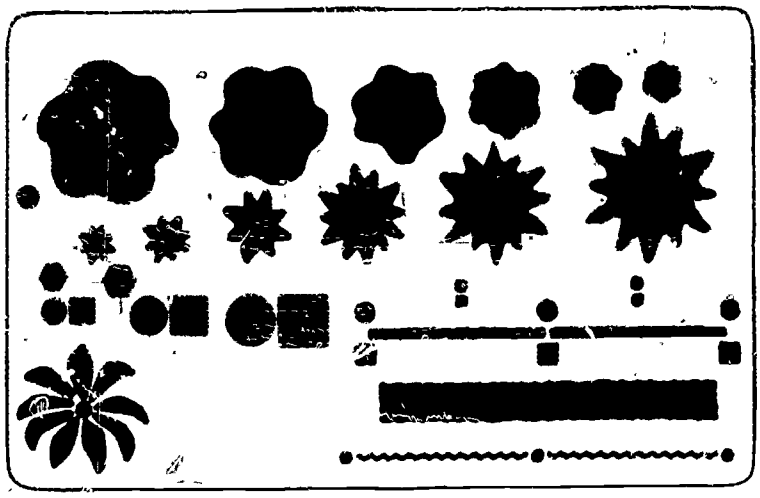

Landscape

LETTERING AND TOOLS
UNIT II

ASSIGNMENT SHEET #1--SHARPEN LEAD CORRECTLY

Directions: Using lead holder and pointer or pencil and pencil pointer, sharpen a lead correctly using the procedure in the following example as a guideline.

Example:

1. Select correct lead weight
2. Sharpen lead to correct point

Pencil

Lead Holder

3. Dull point on sandpaper pad

   (NOTE: The pencil point must be kept uniform.)

4. After lead has been sharpened correctly, remove graphite from pencil using styrofoam point cleaner or tissue

   (NOTE: This will help to prevent lead from smudging drawing.)

LETTERING AND TOOLS
UNIT II

ASSIGNMENT SHEET #2--LETTER USING THE CONDENSED STYLE

Directions. Letter in the Condensed style by using the procedure in the following example as a guideline.

Example:

1. Practice by tracing directly on this sheet of paper the Condensed style letters and numerals below

ABCDEFGHIJKLMNOPQRS

TUVWXYZ &1234567890

2. Tape media to drafting surface

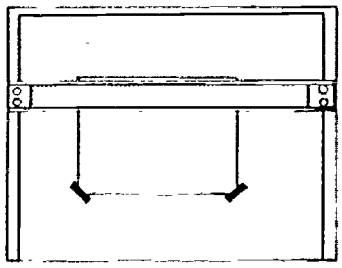

3. Prepare lead point for lettering
4. Draw guidelines on media
5. Letter the entire alphabet and numerals in the Condensed style

LETTERING AND TOOLS
UNIT II

ASSIGNMENT SHEET #3--LETTER USING THE EXTENDED STYLE

Directions. Letter in the Extended style by using the procedure in the following example as a guideline.

Example:

1. Practice by tracing directly on this sheet of paper the Extended style letters and numerals below

ABCDEFGHIJKLMNO
PQRSTUVWXYZ &
1234567890 ½ ¾

2. Tape media to drafting surface

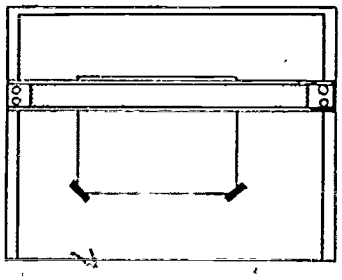

3. Prepare lead point for lettering
4. Draw guidelines on media
5. Letter the entire alphabet and numerals in the Extended style

LETTERING AND TOOLS
UNIT II

ASSIGNMENT SHEET #4-LETTER USING THE VARIATION STYLE

Directions. Letter in the Variation style by using the procedure in the following example as a guideline.

Example:

1. Practice by tracing directly on this sheet of paper the Variation style letters and numerals below

ABCDEFGHIJKLMNOPQR
STUVWXYZ123456789

2. Tape media to drafting surface

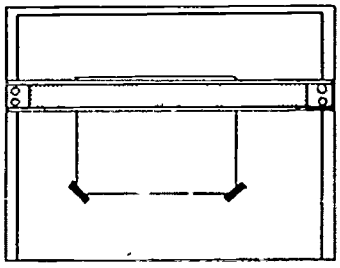

3. Prepare lead point for lettering
4. Draw guidelines on media
5. Letter the entire alphabet and numerals in the Variation style

LETTERING AND TOOLS
UNIT II

ASSIGNMENT SHEET #5-LETTER USING THE KABEL MODERN STYLE

Directions: Letter in the Kabel Modern style by using the procedure in the following example as a guideline.

Example:

1. Practice by tracing directly on this sheet of paper the Kabel Modern style letters and numerals below

ABCDEFGHIJKLMNOPQRST

UVWXYZ & 1234567890

2. Tape media to drafting surface

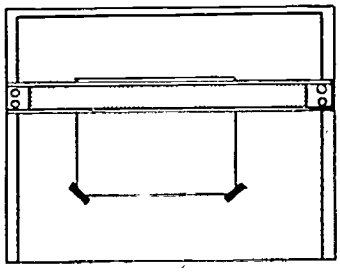

3. Prepare lead point for lettering
4. Draw guidelines on media
5. Letter the entire alphabet and numerals in the Kabel Modern style

LETTERING AND TOOLS
UNIT II

ASSIGNMENT SHEET #6--LETTER USING THE CHISEL STYLE

Directions: Letter in the Chisel style by using the procedure in the following example as a guideline.

Example:

1. Practice by tracing directly on this sheet of paper the Chisel style letters and numerals below

ABCDEFGHIJKLMNOPQ
RSTUVWXYZ 123456789

2. Tape media to drafting surface

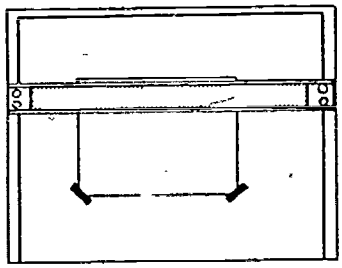

3. Prepare chisel lead point for lettering as shown in Assignment Sheet #1
4. Draw guidelines on media
5. Letter the entire alphabet and numerals in the Chisel style

LETTERING AND TOOLS
UNIT II

ASSIGNMENT SHEET #7--LETTER USING THE TRIANGLE STYLE

Directions. Letter in the Triangle style by using the procedure in the following example as a guideline.

Example:

1. Practice by tracing directly on this sheet of paper the Triangle style letters and numerals below

ABCDEFGHIJKLMNOPQR
STUVWXYZ 1234567890

2. Tape media to drafting surface

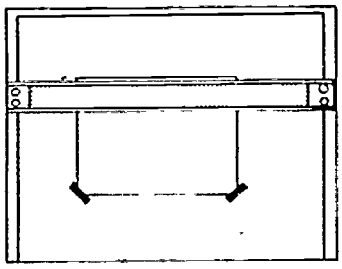

3. Prepare lead point for lettering
4. Draw guidelines on media
5. Letter the entire alphabet and numerals in the Triangle style

LETTERING AND TOOLS
UNIT II

ASSIGNMENT SHEET #8--LETTER USING THE SHADOW STYLE

Directions: Letter in the Shadow style by using the procedure in the following example as a guideline.

Example:

1. Practice by tracing directly on this sheet of paper the Shadow style letters and numerals below

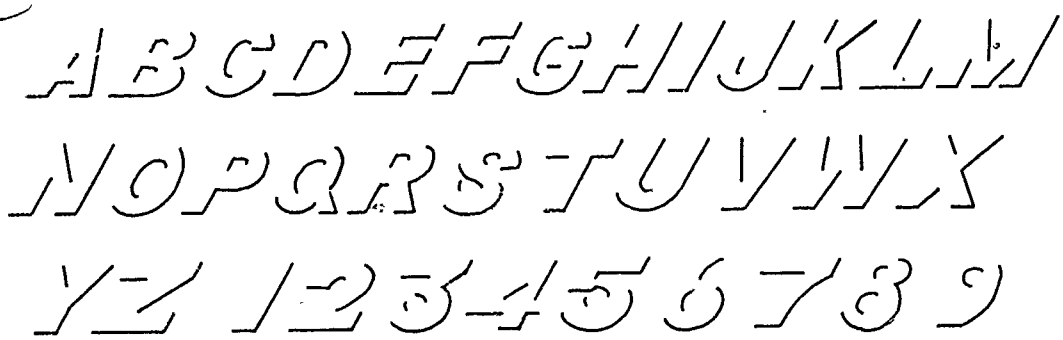

2. Tape media to drafting surface

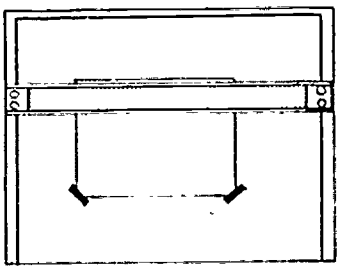

3. Prepare lead point for lettering
4. Draw guidelines on media
5. Letter the entire alphabet and numerals in the Shadow style

LETTERING AND TOOLS
UNIT II

NAME _____

TEST

1. Identify the following architectural styles of lettering.

ABCDEFGHIJKLMNOPQRST

a. _____

ABCDEFGHIJKLMNOPQR

b. _____

ABCDEFGHIJKLMNOPQRS

c. _____

ABCDEFGHIJKLM

d. _____

2. Select true statements concerning the importance of good lettering by placing an "X" in the appropriate blanks.

_____a. Since approximately 98% of a drafter's time is used in lettering, neat lettering conserves time and money for the individual and the company

_____b. Lettering can greatly affect the overall appearance of a drawing

_____c. Most drawings are not reproduced; therefore, the lettering does not need to be that neat

_____d. The letters must be formed very carefully and not crowded together or they will run together when reproduced

_____e. Good lettering and line quality help the student to obtain the first job

3. Match the heights of architectural lettering on the right with the correct uses.

_____a. Used in title blocks and project name

_____b. Used in titles of plans, elevations, sections, and details

_____c. Used in all notes and other lettering

1. 1/8"
2. 1/4"
3. 3/16"

4. Select true statements concerning architectural lettering hints by placing an "X" in the appropriate blanks.

_____a. It is more difficult to do 1/8" letters than 1" because of the area involved

_____b. To develop neatness, accuracy, speed, and legibility, print everything when possible, such as class notes and personal letters

_____c. A triangle should never be used as a "crutch"

_____d. Letters should be in proportion and stable

_____e. Letter shapes may be changed

_____f. Strokes of letters can never be emphasized by pointing the terminal portion

_____g. Light guidelines should never be used

_____h. Select one accepted architectural lettering style of your choice and practice it until you have mastered it

_____i. When making the strokes of a letter, do each stroke very slowly

_____j. Lettering should be the first thing done on a drawing

5. Select types of lettering to be avoided by placing an "X" in the appropriate blanks.

_____a. abcdefghijklmnopqrstuvwxyz

_____b. ABCDEFGHIJKLMNO

_____c. ABCDEFGHIJKLMNOPO

_____d. ABCDEFGHIJKLMNOPQR

_____e. ABCDEFGHIJKLMNOPQR

_____f. ABCDEFGHIJKLMN

6. Name two types of lettering guides used in laying out lettering guidelines.

a. _____

b. _____

7. Match the lettering instruments on the right with the correct descriptions.

_____a. An instrument consisting of a template, a scriber, and an inking pen or pencil

_____b. A device for making a wide variety of either single stroke or "built-up" letters

_____c. An instrument much like the varigraph but simpler which also makes a large variety of styles and sizes of letters

_____d. An instrument that looks like a typewriter with an open-ended carriage which uses a one-time carbon ribbon

_____e. A thin, flat sheet of plastic with letters cut through the sheet

_____f. A machine that produces "type on tape"

_____g. Prepared lettering sheets which come in many different lettering styles and shapes

1. Letter guide
2. Template
3. Lettering instrument
4. Appliques
5. Lettering machine
6. Varigraph
7. VariTyper

8. Identify the following tools and materials.

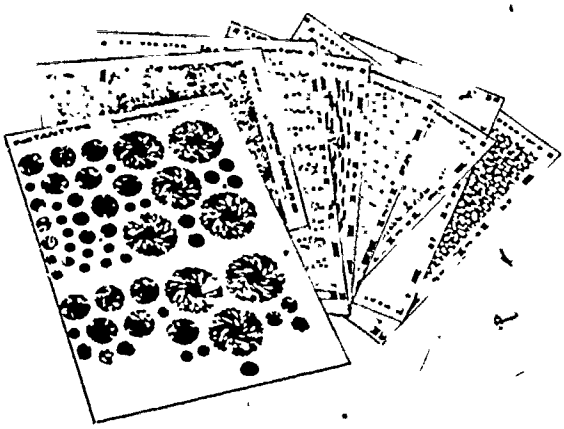

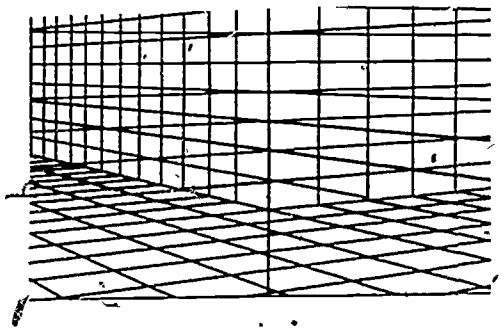

a. _____

b. _____

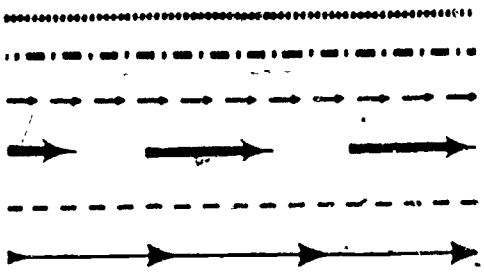

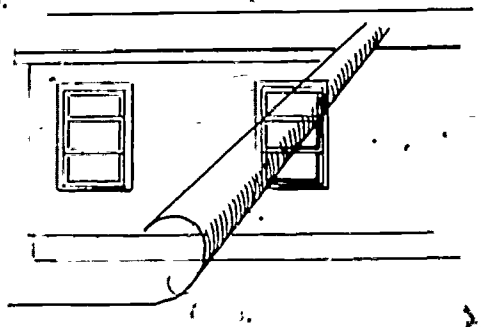

c. _____

d. _____

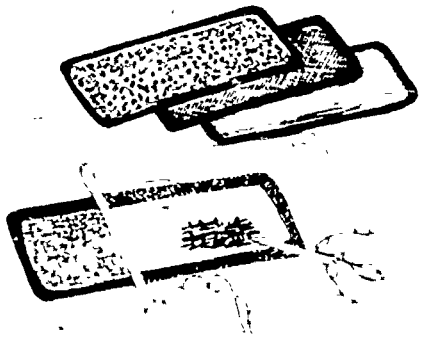

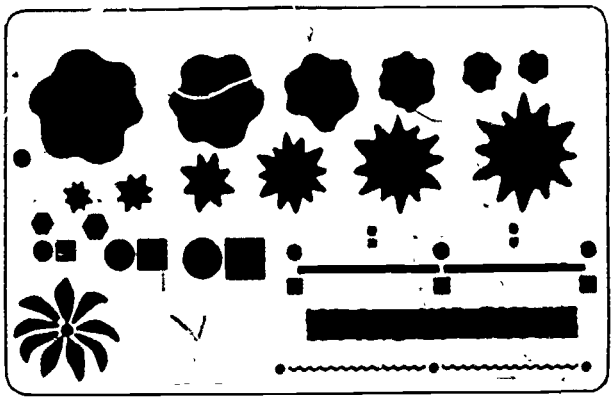

e. _____ f. _____

9. Demonstrate the ability to:

   a. Sharpen lead correctly.

   b. Letter using the Condensed style.

   c. Letter using the Extended style.

   d. Letter using the Variation style.

   e. Letter using the Kabel Modern style.

   f. Letter using the Chisel style.

   g. Letter using the Triangle style.

   h. Letter using the Shadow style.

   (NOTE. If these activities have not been accomplished prior to the test, ask your instructor when they should be completed.)

LETTERING AND TOOLS
UNIT II

ANSWERS TO TEST

1. a. Kabel Modern
   b. Triangle
   c. Condensed
   d. Shadow

2. d, e

3. a. 2
   b. 3
   c. 1

4. b, d, h

5. a, c, d, f

6. Any two of the following:
   a. Braddock Rowe triangle
   b. Ames type lettering guide
   c. Parallelograph

7. a. 3
   b. 6
   c. 1
   d. 7
   e. 2
   f. 5
   g. 4

8. a. Appliques
   b. Grid paper
   c. Pressure-sensitive tape
   d. Underlays
   e. Burnish-plate
   f. Landscape template

9. Evaluated to the satisfaction of the instructor

SITE CONDITIONS
UNIT III

UNIT OBJECTIVE

After completion of this unit, the student should be able to identify components and symbols on a plot plan and draw site and plot plans. This knowledge will be evidenced by correctly performing the procedures outlined in the assignment sheets and by scoring 85 percent on the unit test.

SPECIFIC OBJECTIVES

After completion of this unit, the student should be able to:

1. Match terms related to site conditions with the correct definitions.
2. List site considerations.
3. Select true statements concerning building codes.
4. Complete a list of types of zoning regulations.
5. Select items which may be covered in a residential protective covenant.
6. Complete statements concerning prevailing winds.
7. Select true statements concerning orientation.
8. Identify the components of a plot plan.
9. Identify symbols used on a plot plan.
10. Arrange in order the procedure for drawing a plot plan.
11. Distinguish between the need for a cut and a fill from grade marks.
12. Demonstrate the ability to:
    a. Compile a list of site considerations.
    b. Calculate altitude angle and azimuth using interpolation.
    c. Calculate altitude angle and azimuth using a sun angle calculator.
    d. Determine the cast of a shadow using altitude and azimuth.
    e. Revise plans to correct prevailing wind and orientation problems.
    f. Draw a site plan.
    g. Draw a plot plan.
    h. Determine cut and fill needed on a given lot.

SITE CONDITIONS
UNIT III

SUGGESTED ACTIVITIES

I. Provide student with objective sheet.

II. Provide student with information and assignment sheets.

III. Make transparencies.

IV. Discuss unit and specific objectives.

V. Discuss information and assignment sheets.

VI. Discuss the importance of considering the site (orientation, contours, building codes) before beginning the design of a building.

VII. Have as many of the following as time permits make presentations to the class. They should relate their fields to architectural drafting students.

A. Utility company representative

B. City zoning official

C. City planner

D. Developer

E. Surveyor

F. USDA Soil Conservation Service representative

(NOTE: This representative should discuss local soil types and the importance of knowing the type before building begins.)

G. Landscape architect

VIII. Provide site plans with necessary ordinances or have students obtain ordinances from city.

IX. Provide copies of surveyors' field notes and plans available to make plot plans.

X. Discuss why the students need to know altitude and azimuth.

XI. Show students how to read the part in an almanac which deals with time, angles, and latitudes.

XII. Provide examples of landscape plans. Drawing a landscape plan that coordinates with the student's plot plan could be an optional assignment sheet that would tie in well with this unit.

XIII. Give test.

INSTRUCTIONAL MATERIALS

I. Included in this unit:

A. Objective sheet

B. Information sheet

C. Transparency masters

1. TM 1--Plat
2. TM 2--Prevailing Winds
3. TM 3--Site Plan
4. TM 4--Allowable Building Area
5. TM 5--Plot Plan
6. TM 6--Plot Plan (Continued)
7. TM 7--Plot Plan Symbols
8. TM 8--Plot Plan Symbols (Continued)
9. TM 9-Azimuth and Altitude

D. Assignment sheets

1. Assignment Sheet #1--Compile a List of Site Considerations
2. Assignment Sheet #2--Calculate Altitude Angle and Azimuth Using Interpolation
3. Assignment Sheet #3--Calculate Altitude Angle and Azimuth Using a Sun Angle Calculator
4. Assignment Sheet #4-Determine the Cast of a Shadow Using Altitude and Azimuth
5. Assignment Sheet #5--Revise Plans to Correct Prevailing Wind and Orientation Problems
6. Assignment Sheet #6--Draw a Site Plan
7. Assignment Sheet #7--Draw a Plot Plan
8. Assignment Sheet #8--Determine Cut and Fill Needed on a Given Lot

E. Answers to assignment sheets

F. Test

G. Answers to test

II. References:

A. Hornung, William J. *Architectural Drafting.* Englewood Cliffs, N.J.: Prentice-Hall, Inc., 1966.

B. Kicklighter, Clois E. and Ronald J. Baird. *Architecture Residential Drawing and Design.* South Holland, IL. 60473: Goodheart-Willcox Co., Inc., 1973.

C. Spence, William P. *Architecture Design - Engineering - Drawing.* Bloomington, IL: McKnight Publishing Co., 1979.

D. *ASHRAE Handbook of Fundamentals and Product Directory,* 1977.

SITE CONDITIONS
UNIT III

INFORMATION SHEET

I. Terms and definitions

A. Tract--A defined area of land

B. Plat--Map of a given tract of land or subdivision (Transparency 1)

C. Site--The general locality wherein the lot is situated

D. Lot--The actual plot of ground on which the building is to be built

E. Property survey--Legal document prepared by surveyor which includes dimensions of lot

(NOTE: The property survey is usually part of the deed and is on file in the courthouse, but this varies according to state and local codes.)

F. Topographic survey--Representation of natural and man-made features of the lot such as existing trees, drives, and water

G. Plot plan--Drawing which contains information from property survey and topographic survey

(NOTE: It usually contains the lot, block number, and/or a legal description. This is not a legal document.)

H. Elevation--Vertical distance above or below sea level

I. Benchmark--Point of known elevation serving as a reference

J. Contour lines--Lines which connect points having the same elevation to indicate slope

(NOTE: Widely spaced contour lines indicate a gradual slope, while tightly spaced lines indicate a steep slope.)

K. Orientation--The direction a given wall faces

L. Utility easement (U/E)--Right of a company to cross portions of property with utilities and to maintain and service their equipment

(NOTE: These include water, gas, electric, sewer, and telephone. Railroad is a right of way [R.O.W.].)

M. Building line (B/L)--A line parallel to the property line determining the allowable building area

INFORMATION SHEET

N. Azimuth--Direction from north or south up to 360° measured in degrees, minutes, and seconds

(NOTE: In the morning, the azimuth is measured in an easterly direction, and in the afternoon, it is measured in a westerly direction. Charts for azimuth for your area [according to latitude] can be found in architectural standards books, or *American Nautical Almanac.*)

O. Bearing--Direction measured from north or south towards east or west up to 90° in degrees, minutes, and seconds

P. Altitude angle--Angle formed by the rays of the sun and the earth's surface

(NOTE: Charts for altitudes for your area [according to latitude] can be found in *Architectural Graphic Standards* and other architectural standards books. This material for both azimuth and altitude can help to save energy in conventional structures, buildings with solar energy, and earth sheltered structures.)

Q. Protective covenant--A written agreement to provide the orderly development of a tract

II. Site considerations

A. Choose a possible lot

B. Check local building codes

(NOTE: Existing codes may restrict the type of building that can be built.)

C. Examine the tax structure

(NOTE: Low taxes in an area may not necessarily be an asset.)

D. Check zoning regulations

E. Look for undesirable factors which will lower the future value of the property

1. Street traffic that is busy and noisy
2. Swamps
3. Dumps
4. Railroads
5. Substandard housing

INFORMATION SHEET

F. Look for desirable conveniences

1. Churches
2. Public transportation
3. Schools
4. Shopping centers
5. Hospitals

G. Look for available and adequate utilities

1. Water supply
2. Sewage disposal
3. Gas
4. Electricity
5. Telephone service
6. Fire protection
7. Street lights and paving
8. Garbage disposal

H. Take into account the slope of the land

1. A lot which is flat is easiest to build on, but is difficult to landscape
2. A slightly sloped lot could make a basement desirable and aids in yard drainage
3. A lot with a steep slope will probably require a retaining wall and fill may be necessary
4. A low-lying lot should be avoided because dampness problems usually occur

I. Check to see if the lot is in the flood plain

J. Determine soil conditions and soil types

1. A layer of topsoil a minimum of 1'-0" thick is excellent
2. Clay or sand below the topsoil is considered fine

INFORMATION SHEET

3. Use caution with rocks present on site; this could eliminate the possibility of having a basement, footings will be expensive, and septic tanks may be impossible to install

4. Avoid lots that have been recently filled; they will not support a house, and walls will crack due to settling

K. Check water table

L. Have lawyer complete a title search and have the lot surveyed

(NOTE: Accept only a warranty deed. It is advisable to get title guarantee insurance from a guarantee insurance firm. Be sure the insurance protects the owner because some policies only protect the mortgage holder. This type of insurance will guarantee the title to be clear and will pay any liens against it, if they should occur. Be sure you know the policy limits well.)

III. Building codes

A. Building codes deal mostly with health, stability, and safety

B. There are national, state, and local building codes

(NOTE: Before developing a set of drawings, ALWAYS find out which agency (city, county, or state) determines the way the building is to be built.)

C. There are several standardized building codes

1. "Uniform Building Code" published by the International Conference of Building Officials

2. "The Basic Building Code" by the Building Officials and Code Administrators International, Inc.

3. "The National Building Code" published by the American Insurance Association

4. "The Standard Building Code" prepared by the Southern Building Code Congress International, Inc.

D. The federal government can pass a law as to how a structure can be built, and a state can adopt these laws

(NOTE: If a state adopts these laws, they can make them more stringent, but cannot make them more lenient.)

E. Minimum codes are just that--minimum and are not always the most desired solution

INFORMATION SHEET

IV. Types of zoning regulations

A. Industrial

B. Commercial

C. Residential

D. Civic

(NOTE: Regulations may be amended by a governing board or by a vote of the residents in the affected area.)

V. Items which may be included in a residential protective covenant

A. Legal description of the tract

B. All structures shall be residential

C. No lots can be divided or split without being submitted and approved by a committee

D. The square footage of the garage and number of vehicles it can contain

E. The minimum square footage of the first floor

F. Building plans, specifications, and plot plan must be approved by a selected committee within a specified length of time

G. All plots must be kept free from weeds, trash, rubbish, or other unsightly materials, or the committee can have them removed and charged to the owner of the lot

H. How vehicles can be parked overnight and for extended periods of time

I. After construction has started, how long is allowed to finish the project; if an extension is needed, it must be granted by the committee in writing

(NOTE: There may be a limit on the length of time allowed before starting to build.)

J. No cesspools can be constructed

K. Fencing style and materials

L. Lot square footage

M. No structures of a temporary character, such as a tent, shack, trailer, garage, barn, or other type of out buildings shall be erected on any lot at any time and used as a residence either temporarily or permanently

N. Types of materials, placement of materials, and colors of exterior walls of a structure

INFORMATION SHEET

O. Type of roof

P. Roof overhang sizes

Q. Ornamentation

R. If wood burning fireplace is in house, spark guards in the chimneys must be installed and maintained in effective condition

S. Basketball goals are sometimes not permitted in the front yard or on the front of the house

T. Style and material of mailboxes

U. Garbage and trash cans may have to be screened from view in all directions

V. No livestock or poultry can be raised, kept, or bred on a lot

W. Nothing can be built on easements reserved for utilities or drainage

(NOTE: Sometimes these types of covenants can be changed in whole or in part by more than 50% of the landholders in this tract. The covenant should be read and understood, and possibly have a lawyer look it over before papers are signed.)

VI. Prevailing winds (Transparency 2)

A. In the summer months, the winds should come through the living and sleeping area

B. In the winter months, attempts must be made to block the wind

1. The garage and utility room should be placed to take the winter storms

2. Evergreen trees or tall shrubs will help break the force of the wind

C. In areas of high winds, construction must be reinforced to keep damage down

(NOTE: Check with the weather bureau in your area for information concerning local wind peculiarities and direction.)

VII. Orientation

A. Southern exposures are sunny and warm

B. Northern exposures are cooler in both summer and winter

C. Eastern exposures receive the morning sun and are bright and cheerful

D. Western exposures receive the afternoon sun and can be very hot

INFORMATION SHEET

E. In southern areas of the United States, the south and southwest exposures of the house receive the extreme heat and should be protected with shading devices unless it is to be a solar house

F. In northern areas of the United States, the north and northwest exposures of the house receive the extreme cold and should be protected by placing garage/storage areas on these sides, using evergreen trees as wind breaks, or having few or no windows on these sides

VIII. Components of a plot plan (Transparencies 4, 5, and 6)

A. Length and bearing of each property line

B. Location, outline, and size of buildings on site

C. Contour lines

D. Elevations of property corners and contour lines

E. North arrow

F. Building lines

G. Trees, shrubs, streams, and gardens

H. Streets, driveways, sidewalks, and patios

I. Location of utilities

J. Easements for utilities and drainage, if any

K. Well, septic tank, and drain field

(NOTE: The drain field is sometimes called the absorption field or leeching field.)

L. Fences and retaining walls

M. Lot number or address of site

N. Scale of drawing

(NOTE: The plot plan is drawn using information from the site plan. The site plan presents information only about the property and utilities. See Transparency 3. The plot plan shows both the property and proposed construction.)

INFORMATION SHEET

IX. Symbols used on a plot plan (Transparencies 7 and 8)

A. Sand

B. Open woodland

C. Dense forest

D. Small irregularly spaced trees

E. Tall grass

F. Large stones

G. Gravel

H. Cultivated area

I. Water

J. Orchard

K. Marsh

L. Dry cracked clay

M. North arrow — NORTH

N. Well

O. Ground cover

P. Trees

Q. Spot elevation — EL. 109.1

R. Bench marks — BM × 903.6 BM △ 675.4

S. Property corner — EL. 55.2

T. Property corner with monument — EL. 17

U. Sanitary sewer

V. Gas line

W. Water line

X. Power line

INFORMATION SHEET

Y. Unpaved road

Z. Paved road

AA. Railroad tracks

BB. Fence

CC. Property line

DD. Surveyed contour

100

EE. Estimated contour

FF. Ridge

GG. Valley

HH. Sewer tile

II. Septic field

JJ. Telephone

X. Procedure for drawing a plot plan (Transparencies 4, 5, and 6)

A. Select a scale which will provide the largest drawing on the chosen size of paper

(NOTE: Check the local code.)

Example: 1/8" = 1' to 1" = 30' and smaller

(NOTE: Property lines should be placed sufficiently inside the border to provide room for adding dimensions, notes, and title block.)

B. Lay out the property lines

(NOTE: Be careful in this step to insure an accurate drawing.)

C. Letter the bearing and length of each line and affix the scale near the bottom of the drawing

Example: N 80° 15' 10" W 187.0 feet

(NOTE: This means that the line proceeds in a direction reckoned from the north, turned 80° (degrees), 15' (minutes), and 10" (seconds) westward and is 187.0 feet. All directions are reckoned either from north or south, whichever yields the least angle.)

D. Locate the north arrow on the drawing

INFORMATION SHEET

E. Select a contour interval which is appropriate for site, and plot the contour lines lightly

F. Letter the elevation of each contour line and property corner

Example: EL. 4.6 on property corner, 4.0 on contour line

G. Locate the house on the site

H. Dimension the overall length and width of the house and the distance from the house to the adjacent property lines

(NOTE: The elevation of a reference corner of the house is sometimes given.)

I. Draw surrounding features such as driveway, sidewalks, and patios

(NOTE: The size and elevation may be given for each if they are required.)

J. Determine the center line of the street and location of utilities; draw these features using correct symbols and dimension their location

(NOTE: If a well and septic system are required, draw them at this point.)

K. Draw other topographical features such as trees and shrubs, and darken in contour lines

L. Check drawing to be sure you have included all necessary elements

XI. Need for a cut and a fill

A. If elevation during construction phase is below the grade mark indicated on the stake, a cut is needed (C)

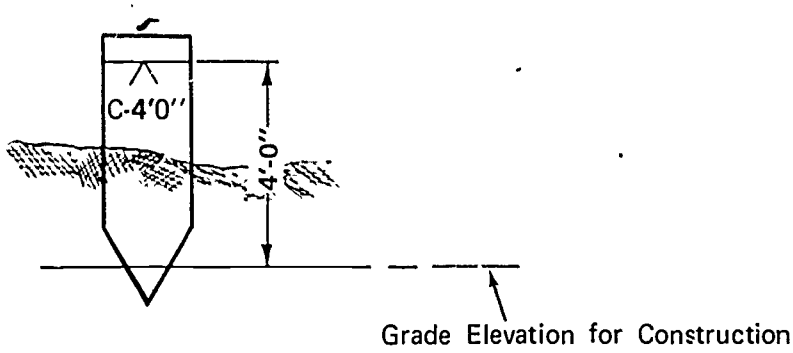

INFORMATION SHEET

B. If elevation during construction phase is above the grade mark indicated on the stake, a fill is needed (F)

Example:

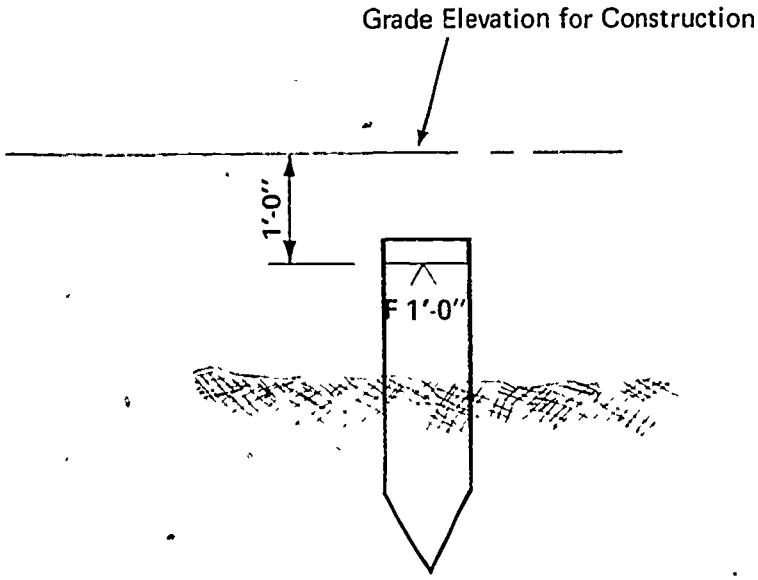

(NOTE: The ∧ mark is sometimes referred to as a keel.)

Plat

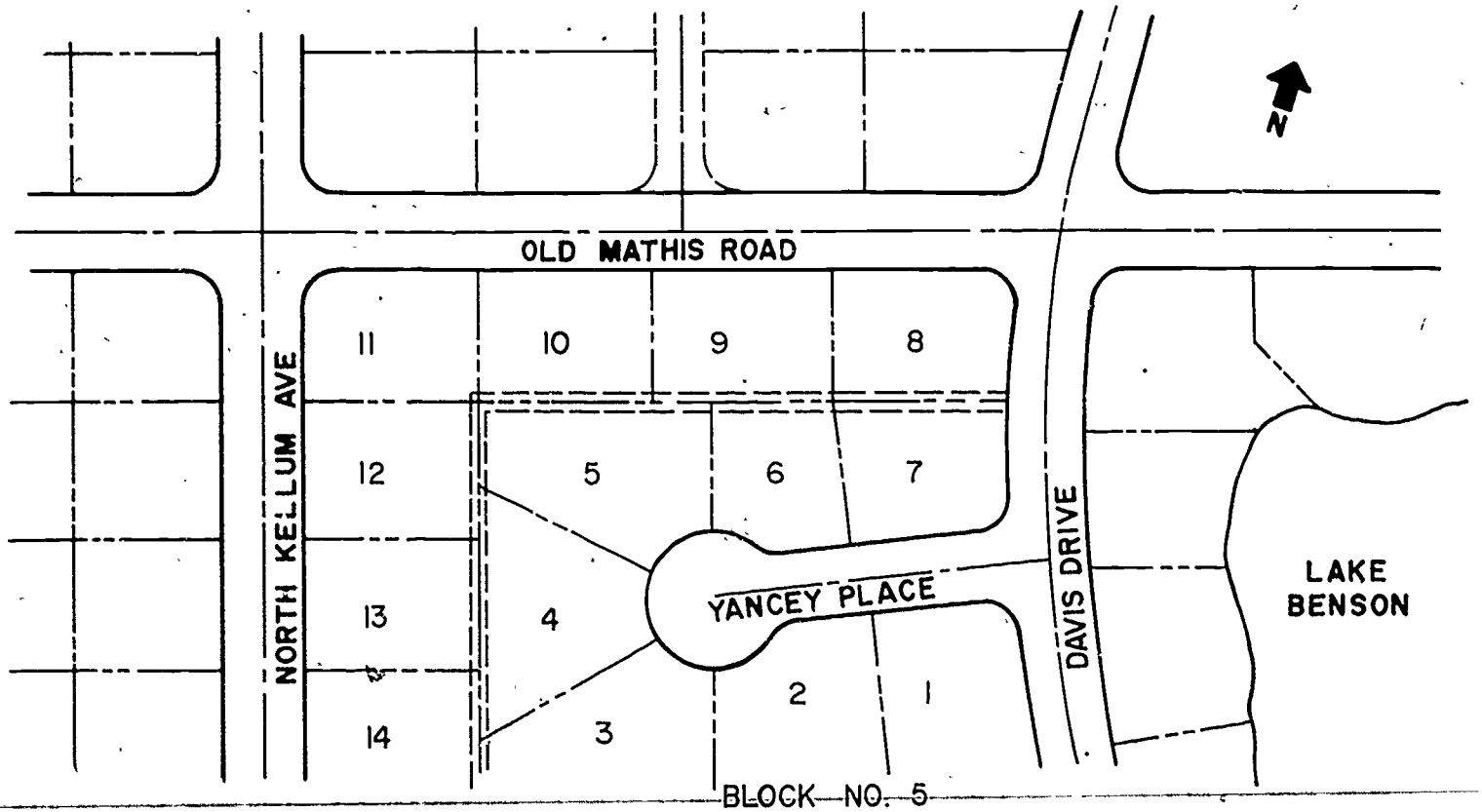

NOTE: PLAT PLANS OR PLAT MAPS ALSO INDICATE BEARING ANGLES, LOT SIZE, EASEMENTS (DRAINAGE & UTILITY), ALSO SIZE & LOCATION, STREET WIDTH & CURVE DATA, BUILDING LINES, & LEGAL DESCRIPTION OF THE PROPERTY

Prevailing Winds

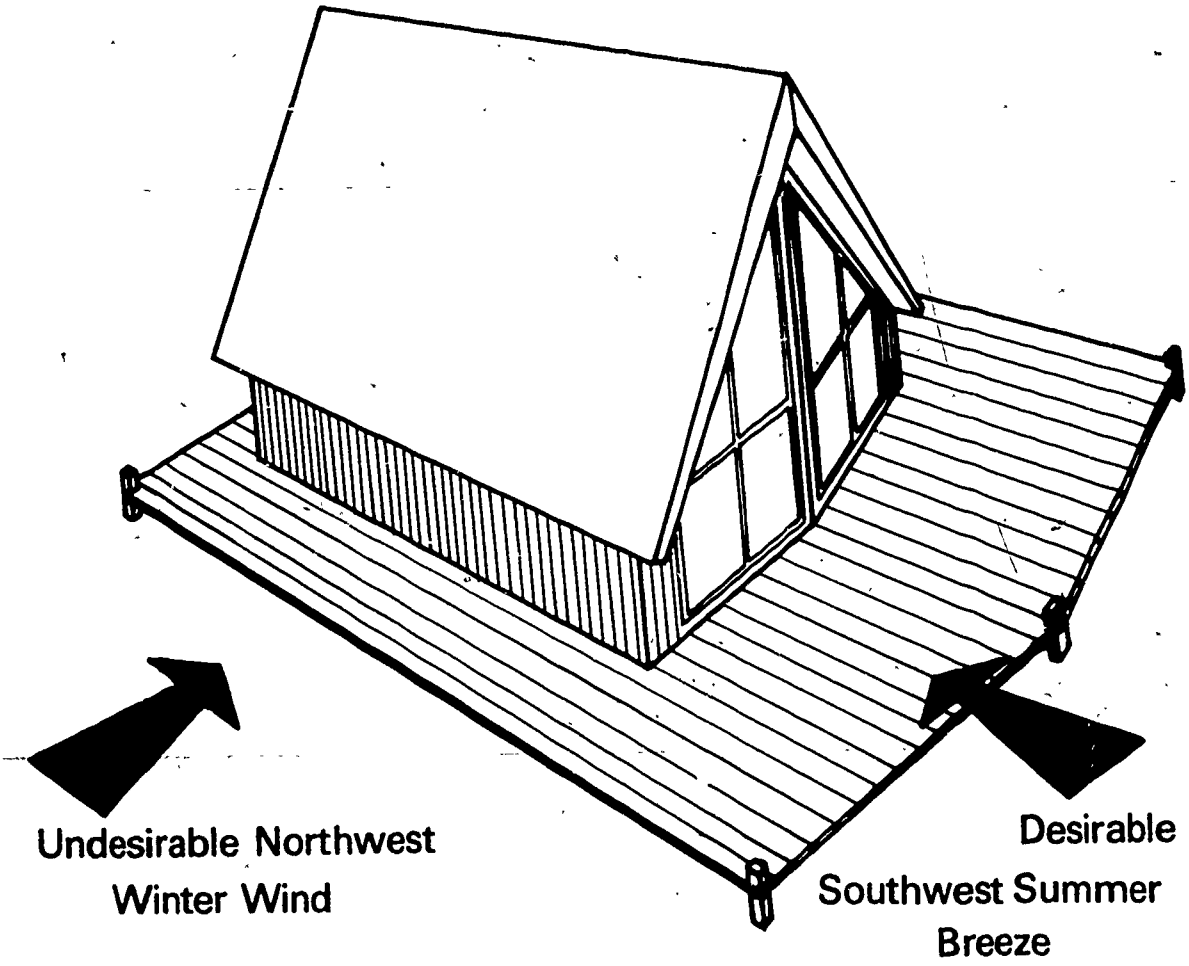

Site Plan

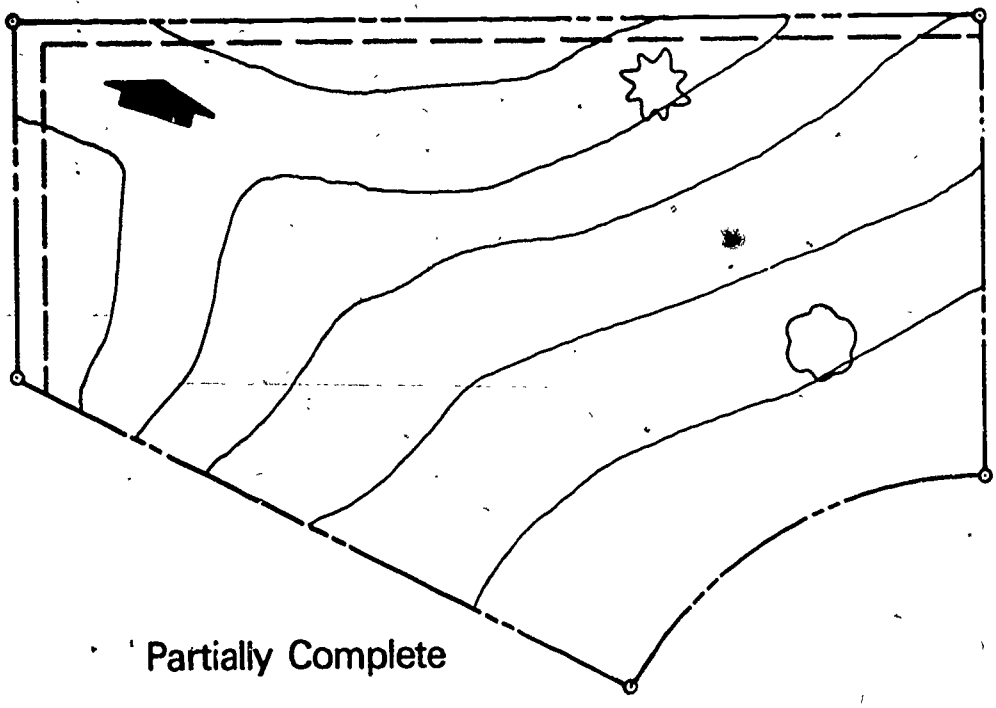

Partially Complete

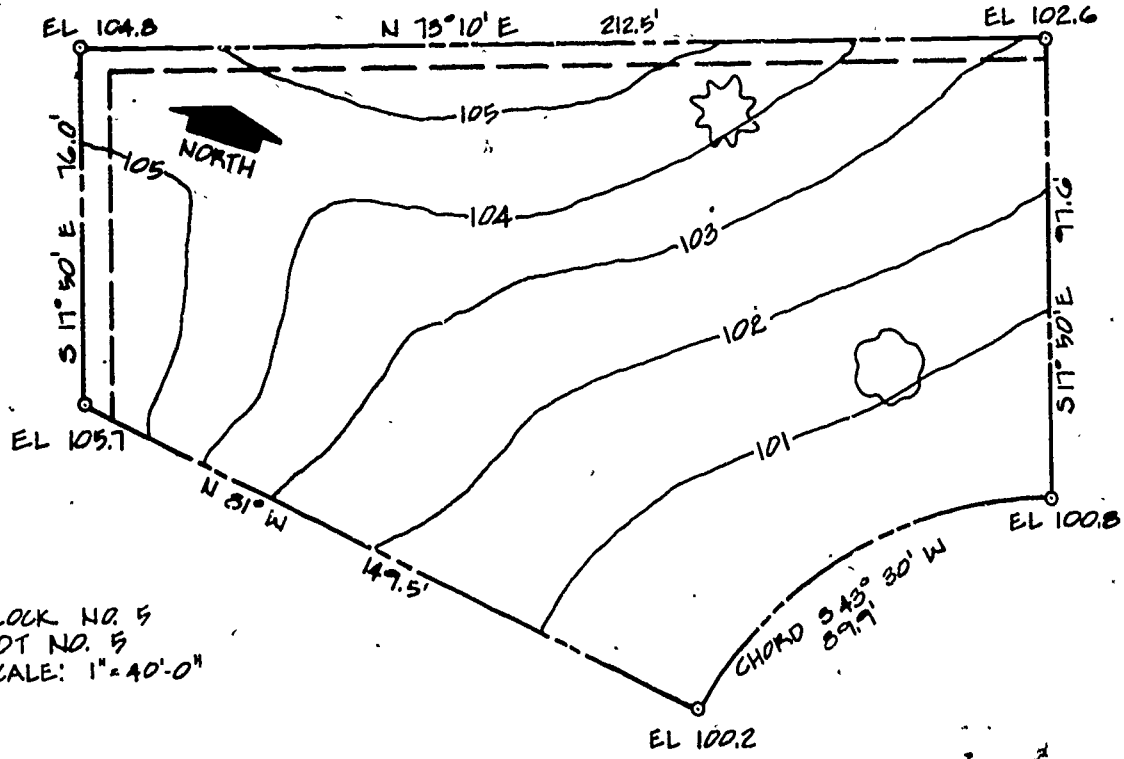

Complete

Allowable Building Area

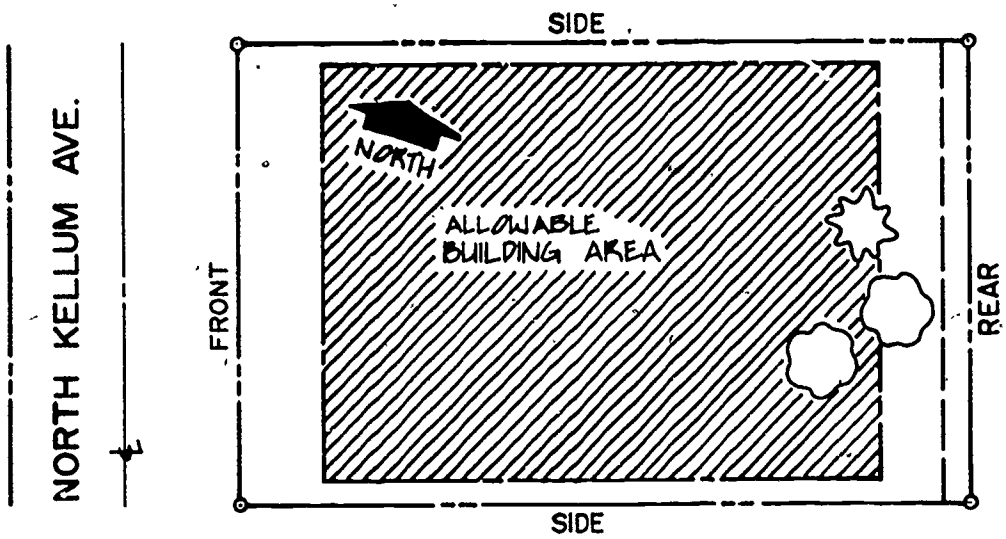

BLOCK NO. 5
LOT NO. 12

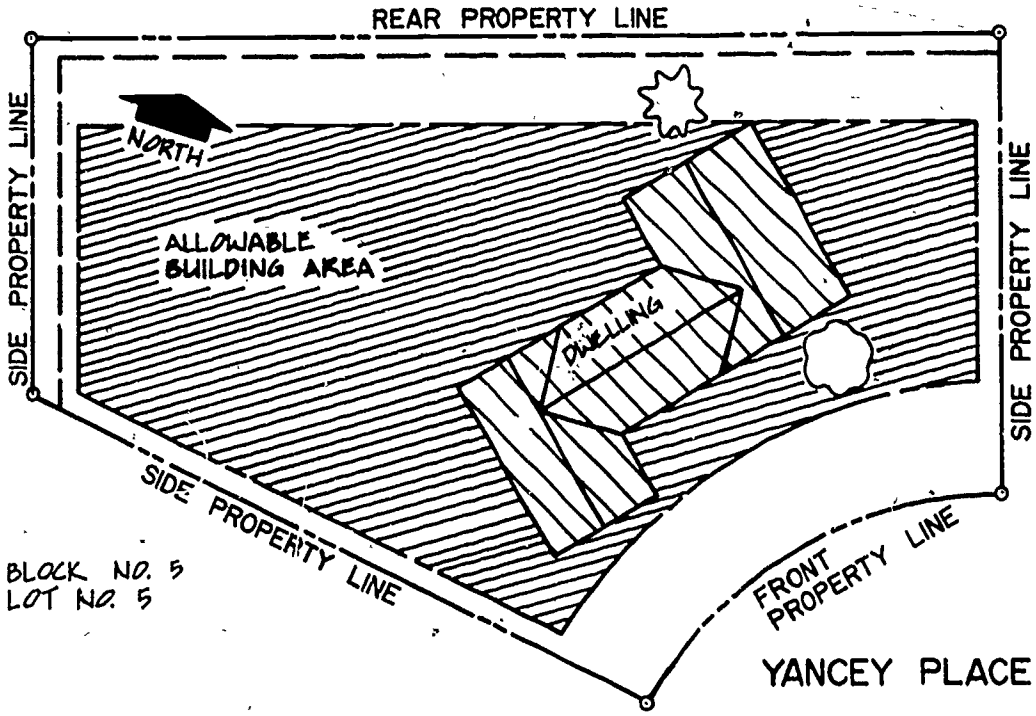

BLOCK NO. 5
LOT NO. 5

NOTE: REFER TO LOCAL BUILDING CODES FOR SETBACK FROM PROPERTY LINES TO DETERMINE ALLOWABLE BUILDING AREA

Plot Plan

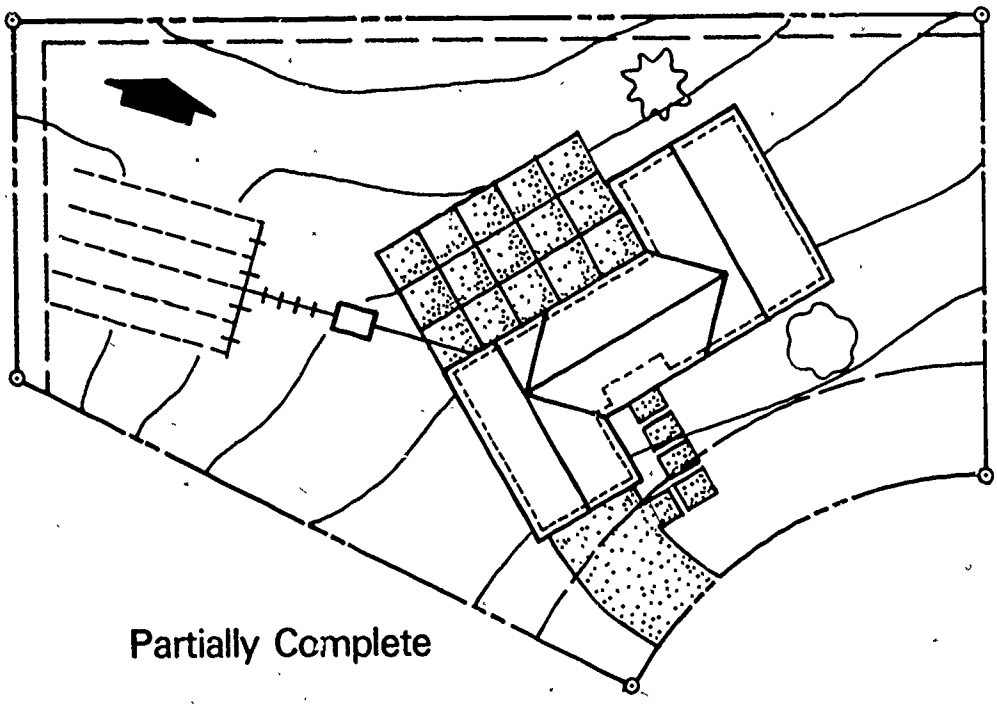

Partially Complete

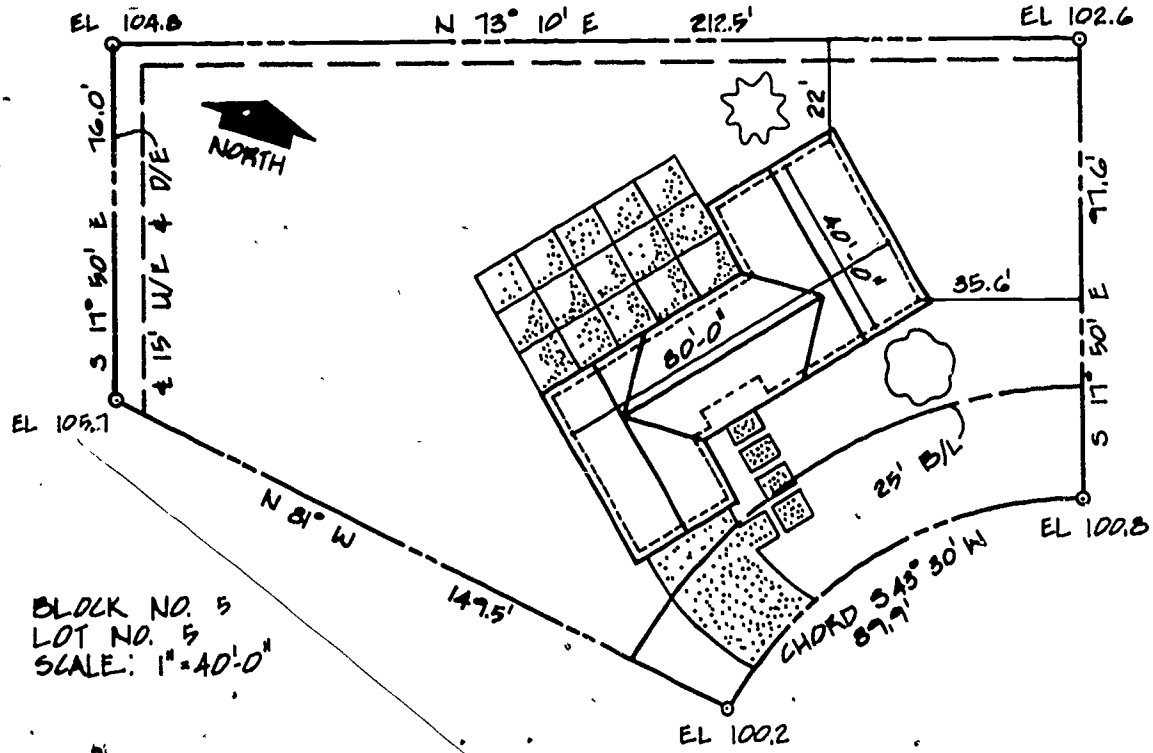

Complete

Plot Plan
(Continued)

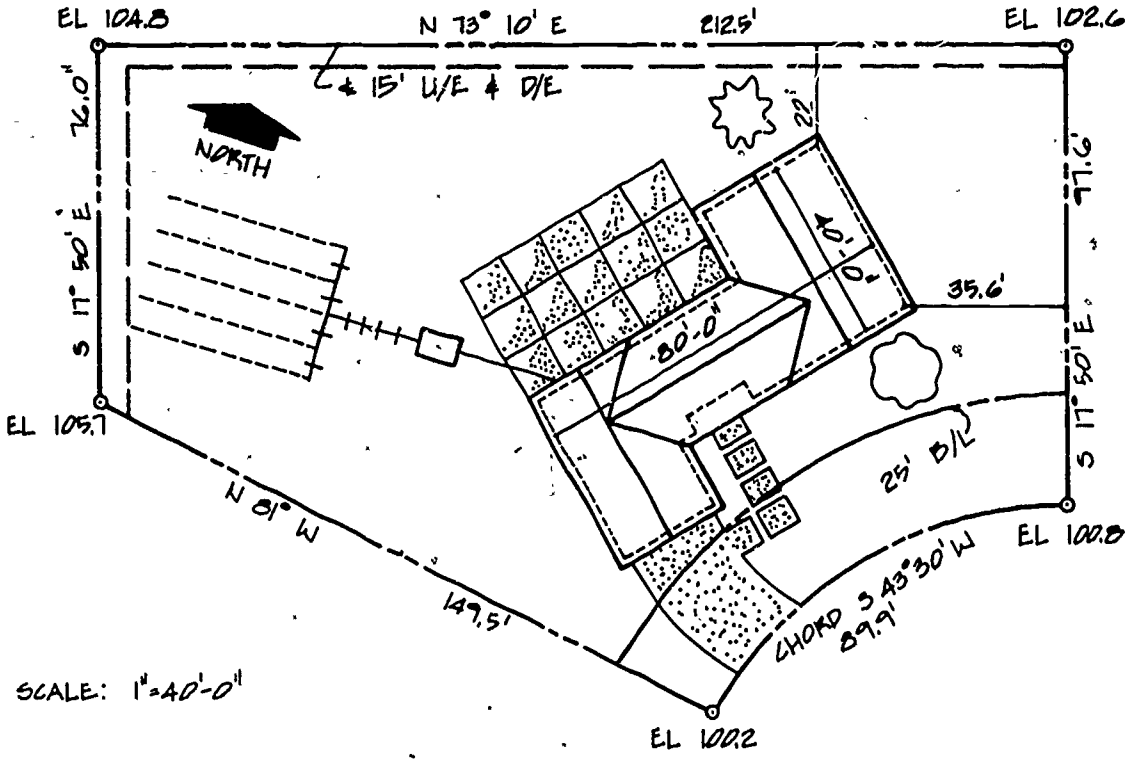

Plot Plan with Septic System (Rural Area)

Plot Plan Symbols

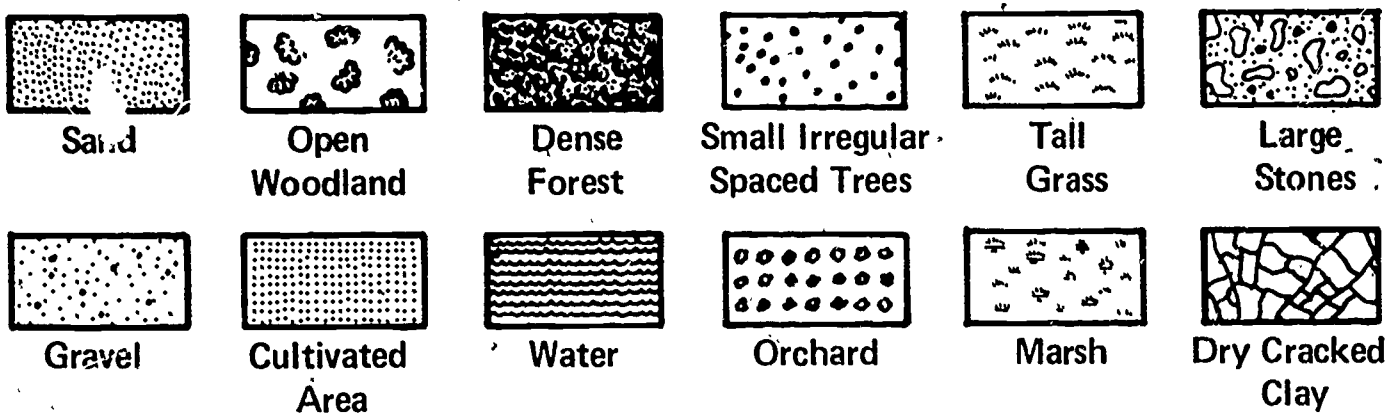

North Arrows

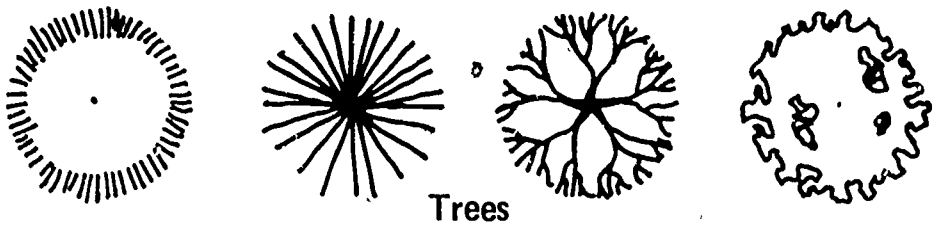

Trees

Well

Ground Cover

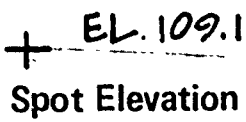

Spot Elevation

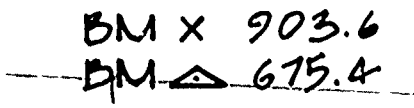

Bench Marks

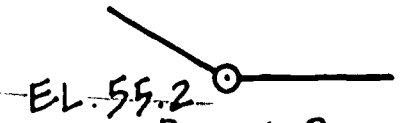

Property Corner

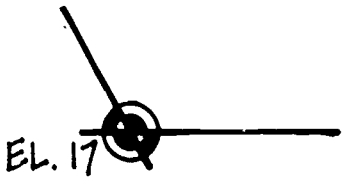

Property Corner with Monument

Plot Plan Symbols
(Continued)

Railroad Track

Paved Road

Unpaved Road

Power Line

Water Line

Gas Line

Sanitary Sewer

Easement

Fence

Property Line

102

Lot Number

New Street

100

Surveyed Contour

Estimated Contour Ridge

Ridge

Valley

Sewer Tile

Septic Field

Telephone

Azimuth and Altitude

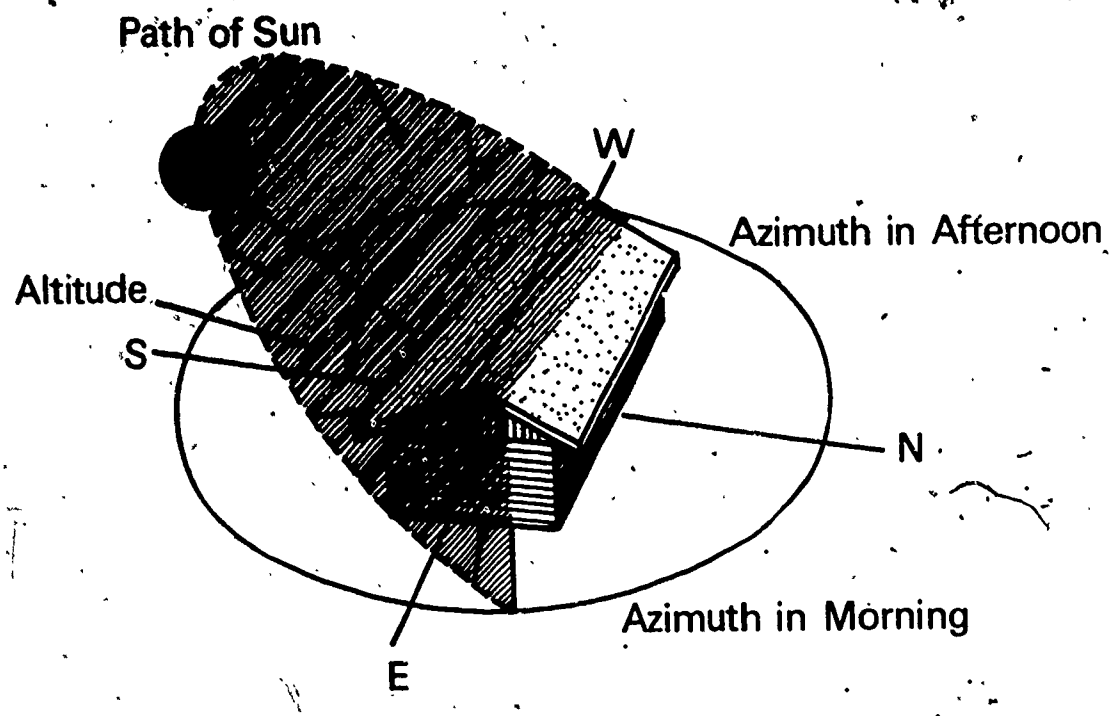

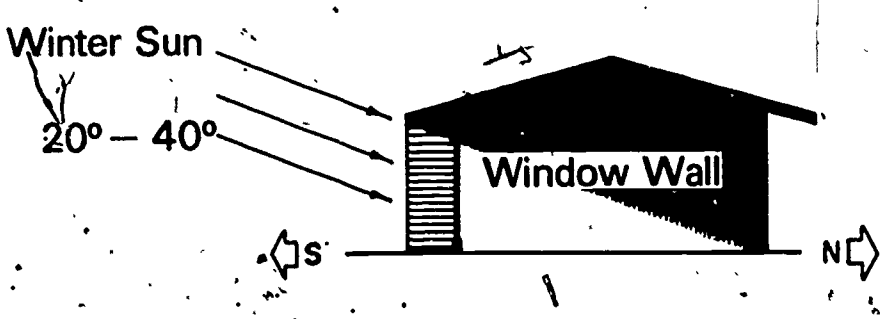

Sun's Rays Low Angle Permits Sun to Enter

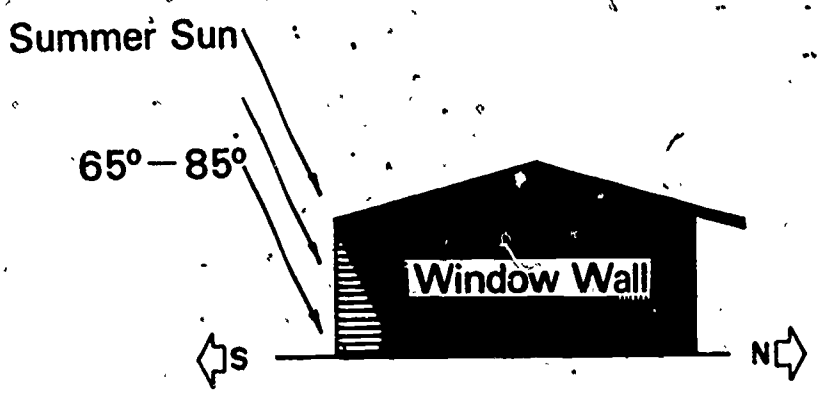

Sun's Rays Overhang Shades Window

SITE CONDITIONS
UNIT III

ASSIGNMENT SHEET #1--COMPILE A LIST OF SITE CONSIDERATIONS

Directions: Look around your neighborhood for a vacant lot or piece of property. Make a list of site considerations that should be made if a house were to be constructed on this property. Include as many factors as necessary from this unit that would apply to the property.

SITE CONDITIONS
UNIT III

ASSIGNMENT SHEET #2--CALCULATE ALTITUDE ANGLE AND AZIMUTH USING INTERPOLATION

Directions: Calculate the altitude and azimuth for the given towns. Use the following example as a guideline for solving the problems using interpolation.

Example: What is the altitude of Altus, Okla. on June 22 at 2:00 p.m. (local time)? Its N. latitude is 34° 4'.

Given: June 22 @ 2:00 p.m. (Local time)

Enid, Okla. 36° 2' N. latitude
Altitude 61°45'
Azimuth 72°45'

Dallas, Texas 32° 5' N. latitude
Altitude 62°30'
Azimuth 80°0'

1. Calculate the difference between Enid and Dallas

Altitude
$$\begin{array}{r} 62^\circ\,30' \text{ (Dallas)} \\ -61^\circ\,45' \text{ (Enid)} \\ \hline 45' \end{array}$$

2. Calculate the unknown altitude of Altus

a. The altitude for 34° of N. latitude (Altus) is 2/4 or 1/2 the difference between 36° and 32° of N. latitude. The unknown amount is called x.

$$\frac{1}{2} = \frac{x}{45'}$$

$$2x = 45'$$

$$x = \frac{45'}{2}$$

$$x = 0^\circ\,22'\,30''$$

b. Add x to smaller altitude

$$\begin{array}{r} 61^\circ 45' \\ +\ 0^\circ 22' 30'' \\ \hline 61^\circ 67' 30'' \end{array}$$

c. Therefore, Altus, Okla. has an altitude of 62° 7' 30".

(NOTE: Calculating the azimuth is the same procedure.)

ASSIGNMENT SHEET #2

Problems:

A: What is the azimuth for Altus, Okla. on June 22 at 2:00 p.m. (local time)?

(NOTE: Use information given for Altus in example.)

Answer _____

B: What is the altitude for Bismarck, N.D. on December 10 at 10:00 a.m. (local time)? Bismarck has a 46°5' N. latitude.

Given: December 10 at 10:00 a.m. (local time)

Paterson, N.J. 40° 5' N. latitude
Altitude 20°30'
Azimuth 29°30'

Victoria, British Columbia 48°25' N. latitude
Altitude 12°30'
Azimuth 28°0'

Answer _____

C: What is the azimuth for Bismarck, N.D. on December 10 at 10:00 a.m. (local time)? Bismarck has a 46°5' N. latitude.

(NOTE: Use information given for Bismarck in Problem B.)

Answer _____

SITE CONDITIONS
UNIT III

ASSIGNMENT SHEET #3--CALCULATE ALTITUDE ANGLE AND AZIMUTH USING A SUN ANGLE CALCULATOR

Directions: Calculate altitude angle and azimuth (bearing angle) with a sun angle calculator or from an architectural standards book for the following cities.

(NOTE: The latitude will have to be looked up for problems A, D, and G.)

Problems:

		Altitude	Azimuth
A.	Tampa, Florida April 28 at 7:00 a.m.		
B.	Auburn, Alabama 32° 4' January 28 at 4:00 p.m.		
C.	Blytheville, Arkansas 36° 0' July 20 at 11:00 a.m.		
D.	Greeley, Colorado August 4 at 6:20 p.m.		
E.	Augusta, Maine 44° 2' July 25 at noon		
F.	International Falls, Minnesota 48° 3' January 29 at 7:40 a.m.		
G.	New Orleans, Louisiana August 27 at 6:00 p.m.		

(NOTE: The times listed above are already given in local time.)

SITE CONDITIONS
UNIT III

ASSIGNMENT SHEET #4--DETERMINE THE CAST OF A SHADOW USING ALTITUDE AND AZIMUTH

Directions: Refer to the following example for determining the cast of a shadow.

Example:

1. Draw plan of structure and elevation
2. Locate north arrow
3. Determine azimuth and draw (95° 30' for this example)
4. Determine altitude and draw (18° 45' for this example)
5. Draw a line parallel to the azimuth through the corner of the roof on the plan
6. Draw a line parallel to the altitude through the same corner in the elevation
7. Where the altitude line intersects the ground line, draw a line straight up until it intersects with the azimuth line

   (NOTE: Follow the same procedure for all corners if desired. If the shadow is only needed for one room, this method can be used with a wall section. All vertical lines form a shadow parallel to the azimuth, and all horizontal lines cast a shadow parallel to themselves.)

ASSIGNMENT SHEET #4

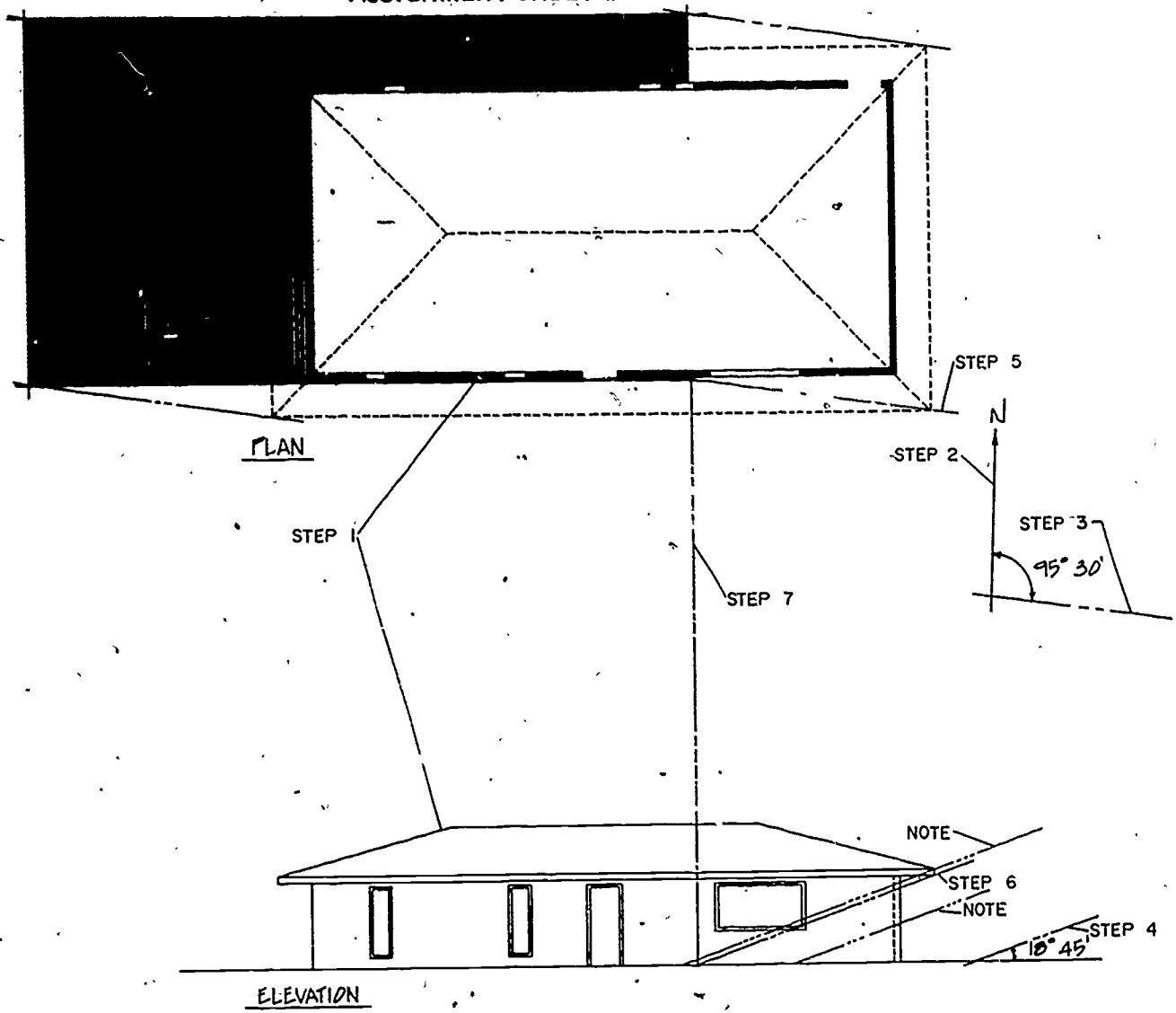

ASSIGNMENT SHEET #4

Problem: Draw the shadow cast on the following house when the azimuth is 43° 15' and the altitude is 69° 50'. Steps 1 and 2 have been done for you.

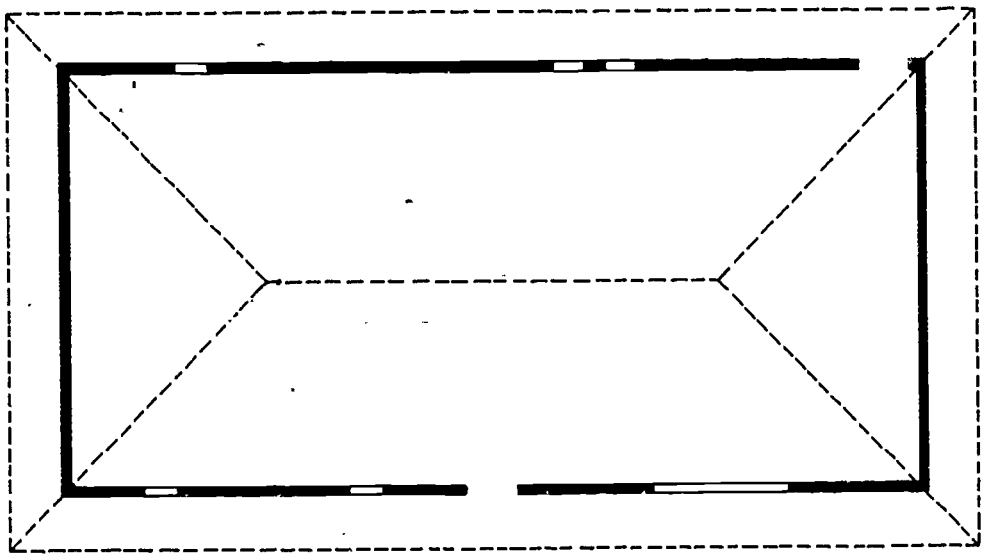

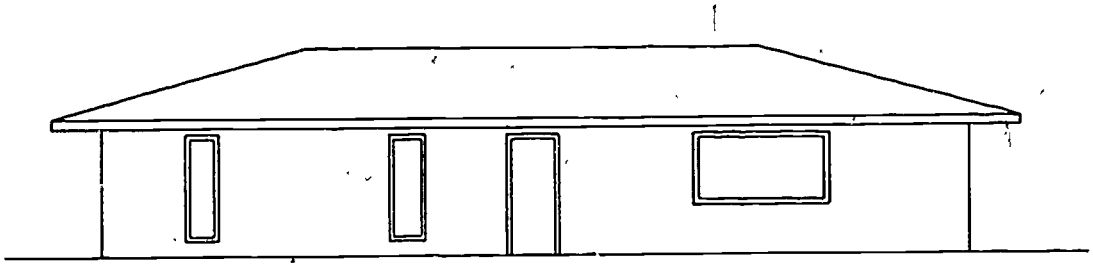

SITE CONDITIONS
UNIT III

ASSIGNMENT SHEET #5--REVISE PLANS TO CORRECT PREVAILING WIND AND ORIENTATION PROBLEMS

Directions: There is something wrong with each of the floor plans below involving prevailing winds and orientation. Make a list of violations for each plan. Revise, rearrange, or reorient each plan to improve its overall position. Make a pencil drawing of the overall improvements.

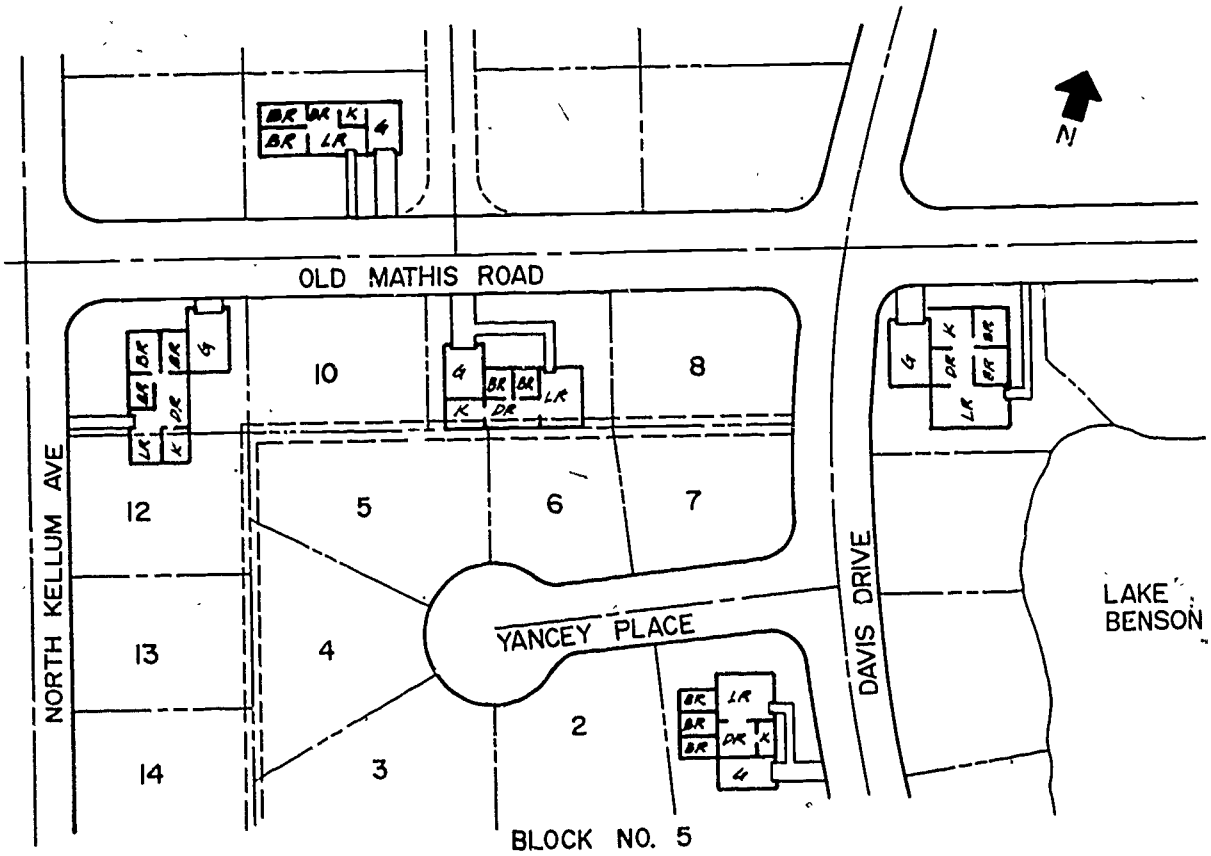

SITE CONDITIONS
UNIT III

ASSIGNMENT SHEET #6--DRAW A SITE PLAN

Directions: Select a vacant site in your community which is suitable for a home. Measure the site, determine north with a compass, and draw a site plan of the property to scale. Show any trees or permanent features that may be on the site and indicate approximate contour lines.

SITE CONDITIONS
UNIT III

ASSIGNMENT SHEET #7--DRAW A PLOT PLAN

Directions: Select a floor plan of a house from a newspaper, magazine, or instructor which is appropriate for the site you drew in Assignment Sheet #6. Locate the house on the site. Draw a plot plan showing the house and property using all appropriate symbols and tem plates.

SITE CONDITIONS
UNIT III

ASSIGNMENT SHEET #8--DETERMINE CUT AND FILL
NEEDED ON A GIVEN LOT

Directions: The lot below needs to be made level at an elevation of 107.0. Use given scale and elevation as a reference. Indicate on the stakes whether cut or fill is needed and how much as shown in objective XI of the information sheet. If retaining walls are needed, indicate on the drawing.

Scale: Vertical 1/4" = 1'-0"
Horizontal 1/16" = 1'-0"

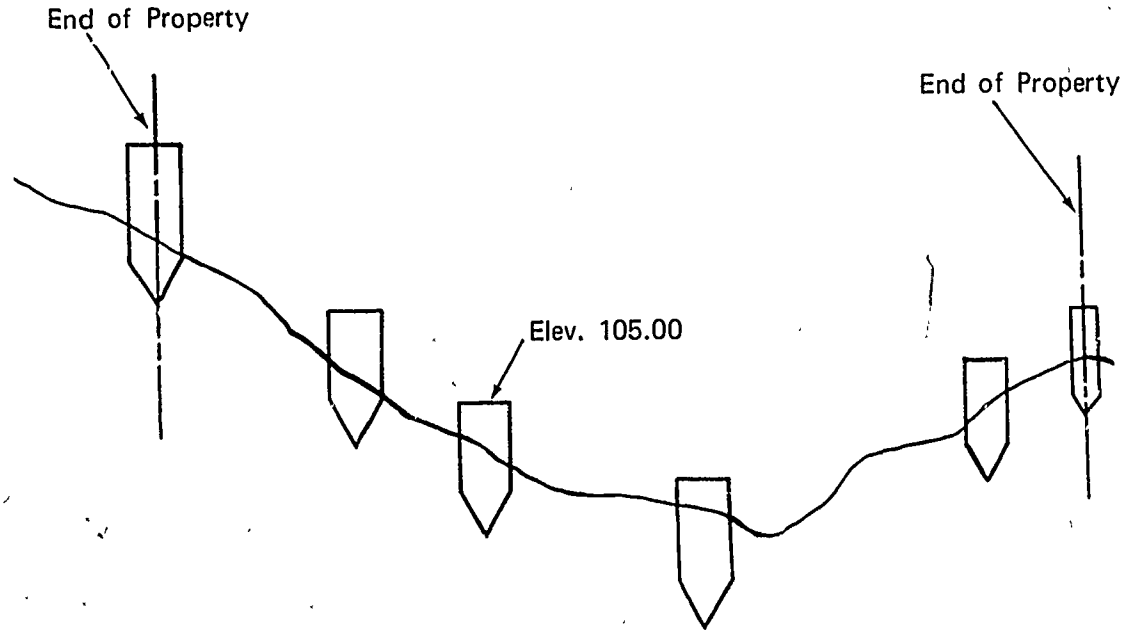

SITE CONDITIONS
UNIT III

ANSWERS TO ASSIGNMENT SHEETS

Assignment Sheet #2

A. 76° 22' 30"
B. 18°30'
C. 29°7'30"

Assignment Sheet #3

	Altitude	Azimuth
A.	18° 45'	95° 30'
B.	13° 15'	57° 45'
C.	69° 50'	43° 15'
D.	7° 0'	106° 0'
E.	64° 45'	0°
F.	2° 30'	59° 30'
G.	5° 0'	98° 30'

(NOTE: When using a sun angle calculator, answers can vary ±3°.)

Assignment Sheet #4

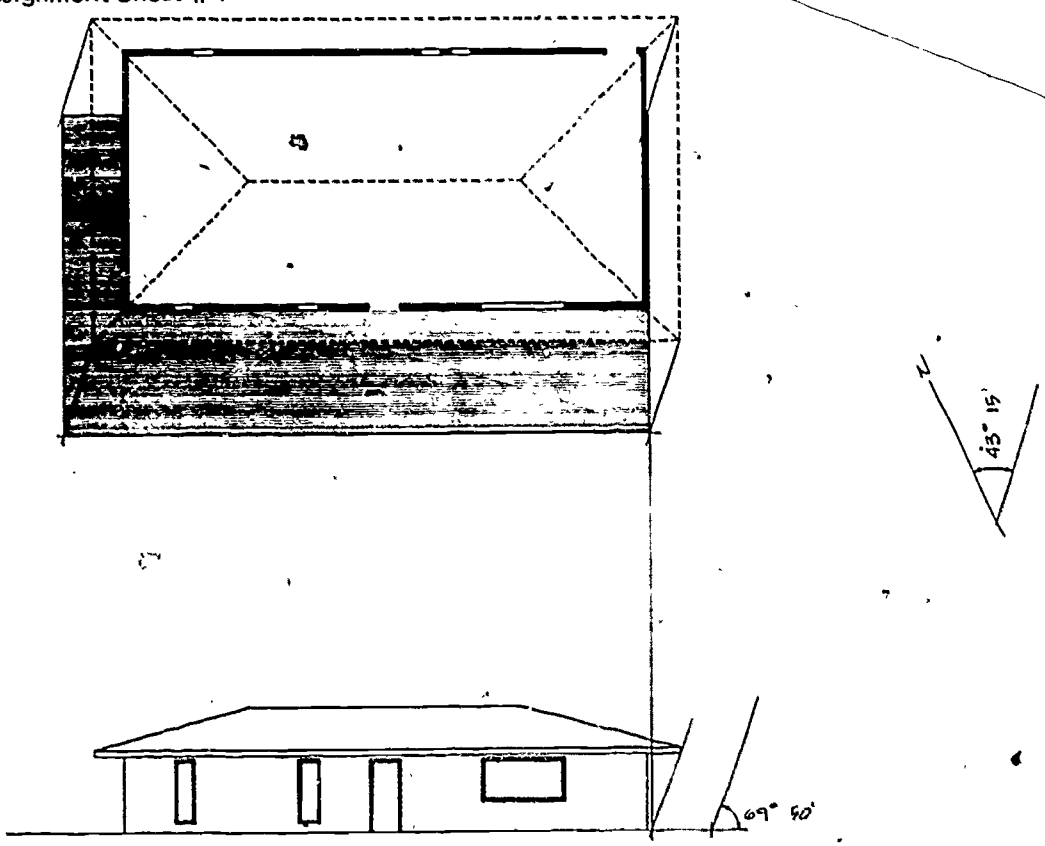

SITE CONDITIONS
UNIT III

NAME _____

TEST

1. Match the terms on the right with the correct definitions.

_____a. A defined area of land

_____b. Map of a given tract of land or subdivision

_____c. The general locality wherein the lot is situated

_____d. The actual plot of ground on which the building is to be built

_____e. Legal document prepared by surveyor which includes dimensions of lot

_____f. Representation of natural and man-made features of the lot such as existing trees, drives, and water

_____g. Drawing which contains information from property survey and topographic survey

_____h. Vertical distance above or below sea level

_____i. Point of known elevation serving as a reference

_____j. Lines which connect points having the same elevation to indicate slope

_____k. The direction a given wall faces

_____l. Right of a company to cross portions of property with utilities and to maintain and service their equipment

_____m. A line parallel to the property line determining the allowable building area

_____n. Direction from north or south up to 360° measured in degrees, minutes, and seconds

_____o. Direction measured from north or south towards east or west up to 90° in degrees, minutes, and seconds

_____p. Angle formed by the rays of the sun and the earth's surface

_____q. A written agreement to provide the orderly development of a tract

1. Utility easement
2. Benchmark
3. Lot
4. Altitude angle
5. Contour lines
6. Plat
7. Property survey
8. Tract
9. Elevation
10. Orientation
11. Plot plan
12. Azimuth
13. Site
14. Bearing
15. Building line
16. Protective covenant
17. Topographic survey

2. List six site considerations.

   a. _____

   b. _____

   c. _____

   d. _____

   e. _____

   f. _____

3. Select true statements concerning building codes by placing an "X" in the appropriate blanks.

   _____a. Building codes deal mostly with the features of a structure which make it appealing to the eye

   _____b. There are only national building codes

   _____c. The "Uniform Building Code" published by the International Conference of Building Officials is a standardized building code

   _____d. The "Realtors Code" published by the American Realtors Corporation is a standardized building code

   _____e. The federal government can pass a law as to how a structure can be built, and a state can adopt these laws

4. Complete the following list of types of zoning regulations.

   a. Industrial

   b. Civic

   c. _____

   d. _____

5. Select items which may be covered in a residential protective covenant by placing an "X" in the appropriate blanks.

   _____a. Style of bedroom furniture allowed

   _____b. Basketball goals are sometimes not permitted in the front yard or on the front of the house

   _____c. All plots must be kept free from weeds, trash, rubbish, or other unsightly materials

   _____d. How vehicles can be parked overnight and for extended periods of time

_____e. Brand of refrigerators to be used

_____f. Occupations of residents

_____g. Fencing style and materials

_____h. No lots can be divided or split without being submitted and approved by a committee

6. Complete the following statements concerning prevailing winds.

   a. In the summer months, the winds should come through _____

   _____

   b. In the _____ attempts must be made to block the wind

      1) The garage and utility room should be placed to take the storms

      2) _____ will help break the force of the wind

   c. In areas of high winds, construction must be reinforced to keep damage down

7. Select true statements concerning orientation by placing an "X" in the appropriate blanks.

   _____a. Southern exposures are cooler in both summer and winter

   _____b. Northern exposures are sunny and warm

   _____c. Western exposures receive the afternoon sun and can be very hot

   _____d. In southern areas of the United States, the south and southwest exposures of the house receive the extreme heat and should be protected with shading devices unless it is to be a solar house

   _____e. In northern areas of the United States, the south and southwest exposures of the house receive the extreme cold

8. Identify the components of a plot plan.

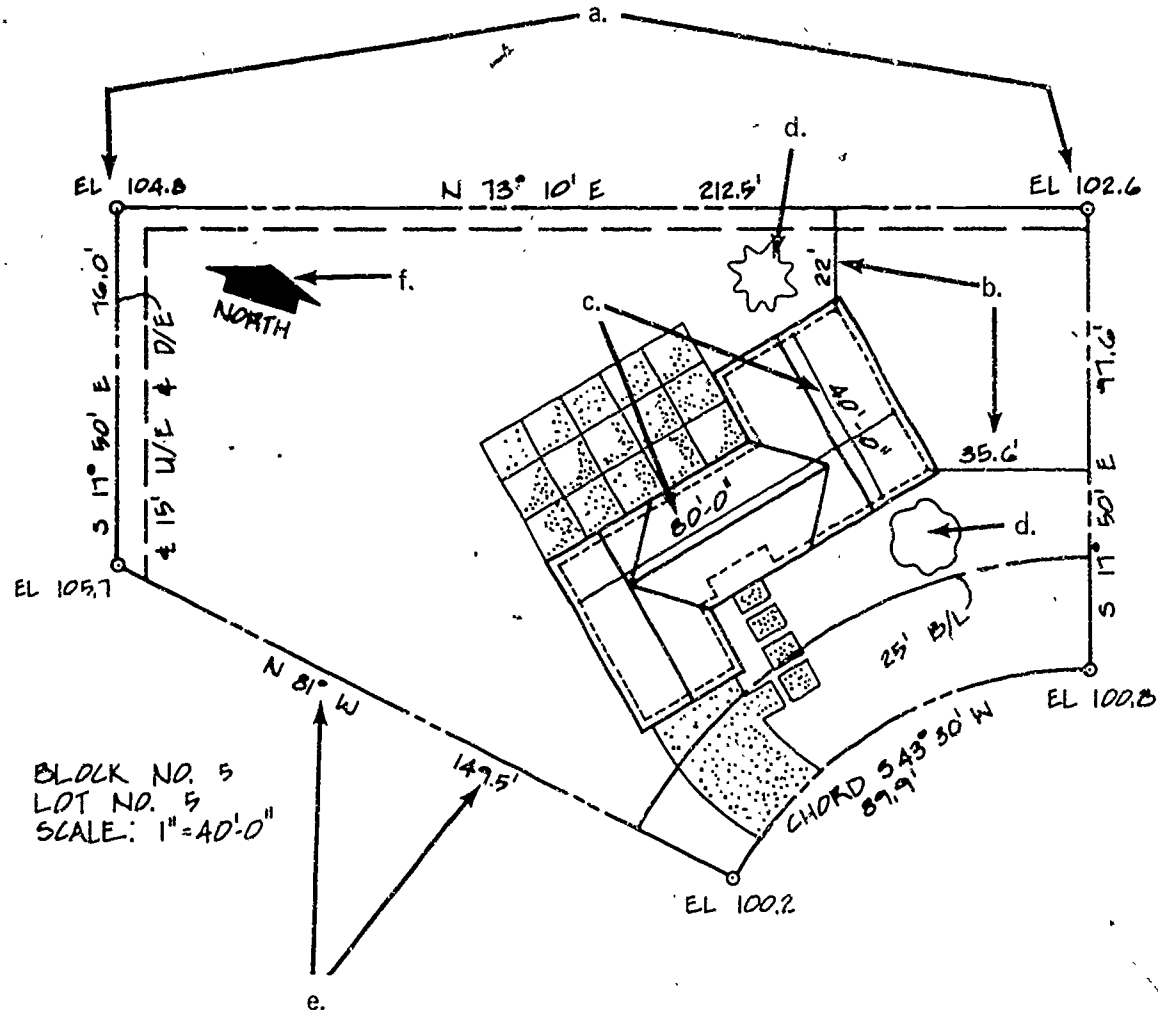

a. _____ b. _____

c. _____ d. _____

e. _____ f. _____

9. Identify symbols used on a plot plan.

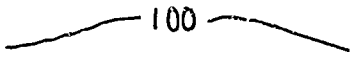

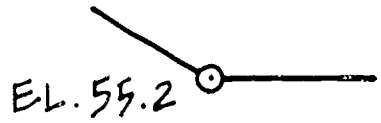

a. _____ b. _____

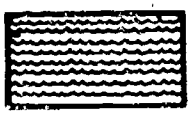

c. _____ d. _____ e. _____

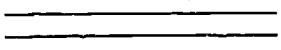

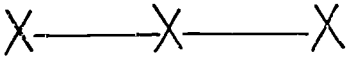

f. _____ g. _____ h. _____

i. _____ j. _____ k. _____

10. Arrange in order the procedure for drawing a plot plan by placing the correct sequence numbers in the appropriate blanks.

_____a. Draw other topographical features such as trees and shrubs, and darken in contour lines

_____b. Dimension the overall length and width of the house and the distance from the house to the adjacent property lines

_____c. Letter the elevation of each contour line and property corner

_____d. Lay out the property lines

_____e. Select a contour interval which is appropriate for site, and plot the contour lines lightly

_____f. Draw surrounding features such as driveway, sidewalks, and patios

__1__g. Select a scale which will provide the largest drawing on the chosen size of paper

_____h. Check drawing to be sure you have included all necessary elements

_____i. Locate the house on the site

_____j. Letter the bearing and length of each line and affix the scale near the bottom of the drawing

_____k. Locate the north arrow on the drawing

_____l. Determine the center line of the street and location of utilities; draw these features using correct symbols and dimension their location

11. Distinguish between the need for a cut and a fill from the grade marks below by placing an "X" next to the grade mark which indicates the need for a cut.

_____a. _____b.

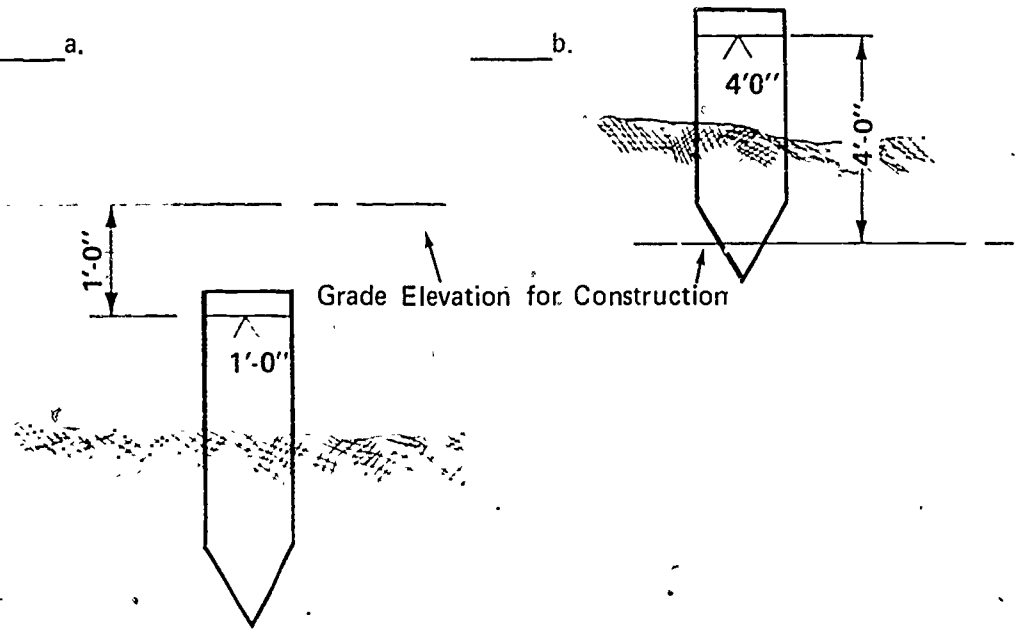

12. Demonstrate the ability to:

a. Compile a list of site considerations.

b. Calculate altitude angle and azimuth using interpolation.

c. Calculate altitude angle and azimuth using a sun angle calculator.

d. Determine the case of a shadow using altitude and azimuth.

e. Revise plans to correct prevailing wind and orientation problems.

f. Draw a site plan.

g. Draw a plot plan.

h. Determine cut and fill needed on a given lot.

(NOTE: If these activities have not been accomplished prior to the test, ask your instructor when they should be completed.)

SITE CONDITIONS
UNIT III

ANSWERS TO TEST

1.

a.	8	g.	11	m.	15
b.	6	h.	9	n.	12
c.	13	i.	2	o.	14
d.	3	j.	5	p.	4
e.	7	k.	10	q.	16
f.	17	l.	1		

2. Any six of the following:
   a. Choose a possible lot
   b. Check local building codes
   c. Examine the tax structure
   d. Check zoning regulations
   e. Look for undesirable factors which will lower the future value of the property
      1. Street traffic that is busy and noisy
      2. Swamps
      3. Dumps
      4. Railroads
      5. Substandard housing
   f. Look for desirable conveniences
      1. Churches
      2. Public transportation
      3. Schools
      4. Shopping centers
      5. Hospitals
   g. Look for available and adequate utilities
      1. Water supply
      2. Sewage disposal
      3. Gas
      4. Electricity
      5. Telephone service
      6. Fire protection
      7. Street lights and paving
      8. Garbage disposal
   h. Take into account the slope of the land
      1. A lot which is flat is easiest to build on, but is difficult to landscape
      2. A slightly sloped lot could make a basement desirable and aids in yard drainage
      3. A lot with a steep slope will probably require a retaining wall and fill may be necessary
      4. A low-lying lot should be avoided because dampness problems usually occur
   i. Check to see if the lot is in the flood plain

j. Determine soil conditions and soil types
   1. A layer of topsoil a minimum of 1'-0" thick is excellent
   2. Clay or sand below the topsoil is considered fine
   3. Use caution with rocks present on site; this could eliminate the possibility of having a basement, footings will be expensive, and septic tanks may be impossible to install.
   4. Avoid lots that have been recently filled; they will not support a house, and walls will crack due to settling

k. Check water table

l. Have lawyer complete a title search and have the lot surveyed

3. c, e

4. c. Commercial
   d. Residential

5. b, c, d, g, h

6. a. The living and sleeping area
   b. Winter
      2) Evergreen trees or tall shrubs

7. c, d

8. a. Elevation of property corners
   b. Location of building on site
   c. Size of building on site
   d. Trees
   e. Length and bearing of property line
   f. North arrow

9. a. Surveyed contour
   b. Property corner
   c. Water
   d. Dense forest
   e. North arrow
   f. Paved road
   g. Fence
   h. Property line
   i. Gas line
   j. Telephone
   k. Power line

10.

a.	11	g.	1
b.	8	h.	12
c.	6	i.	7
d.	2	j.	3
e.	5	k.	4
f.	9	l.	10

11. b

12. Evaluated to the satisfaction of the instructor

RESIDENTIAL DESIGN
UNIT IV

UNIT OBJECTIVE

After completion of this unit, the student should be able to plan the various areas of a house and develop a residential sketch. This knowledge will be evidenced by correctly performing the procedures outlined in the assignment sheets and by scoring 85 percent on the unit test.

SPECIFIC OBJECTIVES

After completion of this unit, the student should be able to:

1. List five items needed from a client when planning a residence.
2. Select characteristics of a lot which can affect building design.
3. Distinguish between rooms located in basic areas of a house.
4. Match rooms in the living area with the correct characteristics.
5. Match rooms in the service area with the correct characteristics.
6. Complete a chart of characteristics of rooms in the sleeping area.
7. State the general rule to remember when planning the flow of traffic through a house.
8. Select true statements concerning factors to observe when planning the flow of traffic between rooms.
9. Match categories of storage facilities with the correct descriptions.
10. Sequence the steps for making a preliminary residential sketch.
11. Demonstrate the ability to:
    a. Determine client needs.
    b. Plan a kitchen.
    c. Plan a sleeping area.
    d. Plan a bathroom.
    e. Plan traffic patterns.
    f. Plan storage facilities.
    g. Develop a preliminary residential sketch.

RESIDENTIAL DESIGN
UNIT IV

SUGGESTED ACTIVITIES

I. Provide student with objective sheet.

II. Provide student with information and assignment sheets.

III. Make transparencies.

IV. Discuss unit and specific objectives.

V. Discuss information and assignment sheets.

VI. Have an interior decorator or designer talk to class about architectural styles of furniture and coordinating the interior decor between rooms and between exterior and interior styles.

VII. Take a field trip in your area to see different types of model homes.

VIII. Have a residential contractor talk to class.

IX. Invite a realtor to be a speaker on what most families are looking for in a house and selling features of a house.

X. Obtain specification sheets from appliance dealers so student can determine the space needed in their plans.

(NOTE: The sketch that the students draw in Assignment Sheet #7 will be their design project, and the students will be using this project throughout the course. For example in "Working Drawings," Unit VI, the students will draw the floor plan and elevation for this design. If you feel that the problem in Assignment Sheet #7 will be too large, you may wish to assign an alternate problem.)

XI. Give test.

INSTRUCTIONAL MATERIALS

I. Included in this unit:

A. Objective sheet

B. Information sheet

C. Transparency masters

1. TM 1--Types of Living Rooms

2. TM 2--Dining Room

3. TM 3--Kitchen Arrangements
4. TM 4--Kitchen
5. TM 5--Utility Room
6. TM 6--Bedroom
7. TM 7--Bathroom Clearances
8. TM 8--Bathroom Sizes
9. TM 9--Traffic Patterns
10. TM 10--Storage Areas

D. Assignment Sheets

1. Assignment Sheet #1--Determine Client Needs
2. Assignment Sheet #2--Plan a Kitchen
3. Assignment Sheet #3--Plan a Sleeping Area
4. Assignment Sheet #4--Plan a Bathroom
5. Assignment Sheet #5--Plan Traffic Patterns
6. Assignment Sheet #6--Plan Storage Facilities
7. Assignment Sheet #7--Develop a Preliminary Residential Sketch

E. Test

F. Answers to test

II. References:

A. Goodban, William T. and Jack J. Hayslett. *Architectural Drawing and Planning*. St. Louis: Gregg Division/McGraw-Hill Book Co., 1979.

B. Hepler, Donald E. and Paul I. Wallach. *Architecture Drafting and Design*. St. Louis: Gregg Division/McGraw-Hill Book Co., 1977.

C. Hornung, William J. *Architectural Drafting*. Englewood Cliffs, N. J.: Prentice-Hall, Inc., 1966.

D. Kicklighter, Clois E. and Ronald J. Baird. *Architecture Residental Drawing and Design*. South Holland, IL 60473: Goodheart-Wilcox Co., Inc., 1973.

E. Spence, William P. *Architecture Design - Engineering - Drawing*. Bloomington, IL: McKnight Publishing Co., 1979.

F. Stegman, George K. and Harry J. Stegman. *Architectural Drafting*. Chicago 60637: American Technical Society, 1974.

RESIDENTIAL DESIGN
UNIT IV

INFORMATION SHEET

I. Information needed from client when planning a residence

A. Financial ability of client

(NOTE: Relate this to local square footage building costs.)

B. What the client wants

C. Minimum requirements of the client (Assignment Sheet #1)

D. Client's preference in architectural style

E. Lot size and location

II. Characteristics of a lot which can affect building design

A. Location of natural and man-made features

Examples: Natural--Water, trees; man-made--existing structures, sidewalks

B. Relationship of front elevation and entries to the street

C. View

D. Prevailing winds

E. Direction of lot

(NOTE: This affects the orientation of a structure.)

F. Size of lot

G. Shape of lot

H. Slope of lot

I. Building restrictions

III. Rooms located in basic areas of a house

A. Living

1. Entrance

2. Living room

INFORMATION SHEET

3. Dining room

4. Recreation room

5. Family room

6. Den

7. Porch

(NOTE: A patio or an Hawaiian porch [lanai] may be included rather than a porch.)

B. Service

1. Kitchen

2. Laundry

3. Utility

4. Garage or carport

5. Workshop

C. Sleeping

1. Bedroom

2. Bathroom

INFORMATION SHEET

IV. Rooms in the living area and characteristics (Transparencies 1 and 2)

Room	Purpose	Minimum Sizes	Extra Features	Location
Entrance	Area through which people enter the house	Room--6' x 6' Door--3'-0" x 6'-8"	Closet; weather resistant flooring	Main part of house, service area, or between indoor and outdoor living areas
Living Room	Primarily used for formal or informal relaxation and recreation; may be used for almost any purpose	Varies according to use and size of family	May include a fireplace; should have focal point such as picture window or fireplace	Adjacent to main entrance
Dining Room	Area used for formal or informal dining	Varies according to use and size of family; usually not less than 10' x 12'	Decor consistent with living room	Near the kitchen and usually near the living room
Recreation Room	Used as a play room or game room for recreational activities	Depends upon use and size of furnishings to be included	Should be easy to maintain; should include storage space	May be located in basement, attic, or main level of house, depending upon available space

INFORMATION SHEET

Room	Purpose	Minimum Sizes	Extra Features	Location
Family Room	Used for family centered activities such as TV, music, or table games	Depends upon use and size of furnishings to be included	Should be easy to maintain; should include storage space	Usually located near the kitchen; may be near living or dining rooms
Den	Use depends on family; usually for quiet activities such as work or study	Depends upon use and size of furnishings to be included Door--2'-8" x 6'-8"	May be designed to serve as a guest bedroom	Near both living and sleeping areas, if possible
Porch	Varies; may be used for entertaining, dining, or to provide shelter for the entrance	Room--6' x 8' Door--3'-0" x 6'-8"	Coverings and furnishings should be weather resistant	Outside near entrance according to occupants' needs/ uses

INFORMATION SHEET

V. Rooms in the service area and characteristics (Transparencies 3, 4, and 5)

Room	Purpose	Minimum Sizes	Extra Features	Location
Kitchen	Wash, store, and cook food; may serve as dining or laundry	Depends upon use and style of kitchen	Storage and mixing area, preparation and cleaning area, and cooking area; adequate ventilation; doors should swing away from work area; sufficient utility outlets	Adjacent to dining room and outside entrance
Laundry	Wash, dry, and care for occupants' clothing and household articles	No minimum size, but ample work space must be provided	Storage for supplies; utility outlets to accommodate appliances	Near service entrance facilities; may be in sleeping area
Utility Room	May serve as laundry in addition to other areas such as storage, sewing, or food preservation	No minimum size; size depends upon use	Storage for supplies; utility outlets to accommodate appliances	Near service entrance and plumbing facilities
Garage or Carport	Provide shelter for one or more vehicles	Depends on size and number of vehicles; single--12' x 20', double--20' x 20'	Storage, driveway, Fireproof wall between garage and living area	Attached, detached, or connected by a breezeway to the other service areas

INFORMATION SHEET

Room	Purpose	Minimum Sizes	Extra Features	Location
Workshop	Depends upon occupant use, such as hobbies or work	Depends upon size or type of tools and use made of the area	Soundproofing and fire protection may be added; workbench; storage for supplies and tools; should be easy to clean and require low maintenance	Located near service area and away from sleeping area

I. Characteristics of rooms in the sleeping area (Transparencies 6, 7, and 8)

Room	Purpose	Minimum Sizes	Extra Features	Location
Bedroom	Quiet activities such as sleeping, resting, or reading	Room--100 sq. ft. Door--2'-8" x 6'-8"	Closets; windows and/or ventilation	Quiet part of house
Bathroom	Personal hygiene; may provide other functions such as laundry or dressing	Room--5' x 8' Door--2'-0" x 6'-8"	Storage space; ventilation	Near bedrooms or near service area

(NOTE: Door sizes will vary for wheel chair access.)

INFORMATION SHEET

VII. General rule to remember when planning the flow of traffic through a house--People must be able to move from room to room and from one part of the house to another with a minimum of congestion and unnecessary steps

(NOTE: Rooms can be rendered useless by having a main traffic aisle directed through them.)

VIII. Factors to observe when planning the flow of traffic between rooms (Transparency 9)

A. Plan for the heaviest flow of traffic to occur between the kitchen and dining areas, the bedrooms and bath, and the living and dining areas

B. Dining area should be next to the kitchen and easily accessible

C. It should be possible to enter the kitchen without crossing the dining area

D. Have kitchen adjacent to service entrance

(NOTE: An outside door is very desirable in a kitchen.)

E. Locate the garage or carport near the kitchen and have an entrance permitting easy access into it

F. Bedrooms should have easy access to a bath

G. Each bedroom should have access to a hall

(NOTE: It is poor design to have to go through one bedroom to reach another.)

H. Plan to be able to enter a house and go to the bedroom area or bath without crossing through the living area

(NOTE: This will provide privacy, but may not always be possible in every house plan.)

IX. Categories of storage facilities and descriptions (Transparency 10)

A. Wardrobe closets--Shallow clothes closets built into the wall

(NOTE: The minimum inside depth is 24" clear. Doors should expose all parts of the closet for easy access.)

B. Walk-in closets--Closets which are large enough to walk into

(NOTE: The area needed for this type of closet is an area equal to the amount of space needed to hang clothes plus enough space to walk and turn. Only one door is needed.)

INFORMATION SHEET

C. Wall closets--Shallow closets in the wall holding cupboards, shelves, and drawers

(NOTE: Wall closets are normally 18" deep, since this size provides access to all stored items without using an excessive amount of floor area. Swing out doors provide extra storage on the back of the door; however, space must be provided for the swing. For this reason, sliding doors are usually preferred.)

D. Chests and dressers--Free standing pieces of furniture used for storage

(NOTE: The drafter may not have to design these items, but should remember to provide adequate space for their use.)

E. Room dividers--Free standing storage facilities which may be used to divide a large space into smaller areas

(NOTE: Many room dividers include shelves and drawers that open from either side.)

X. Steps for making a preliminary residential sketch

A. Determine client needs

B. Make a list of furniture needed

C. Select an architectural style

D. Determine sizes of furniture

E. Make furniture templates

F. Arrange furniture templates

G. Determine room dimensions

H. Combine rooms into areas

I. Combine areas into floor plan

J. Design outside by projecting elevations

Types of Living Rooms

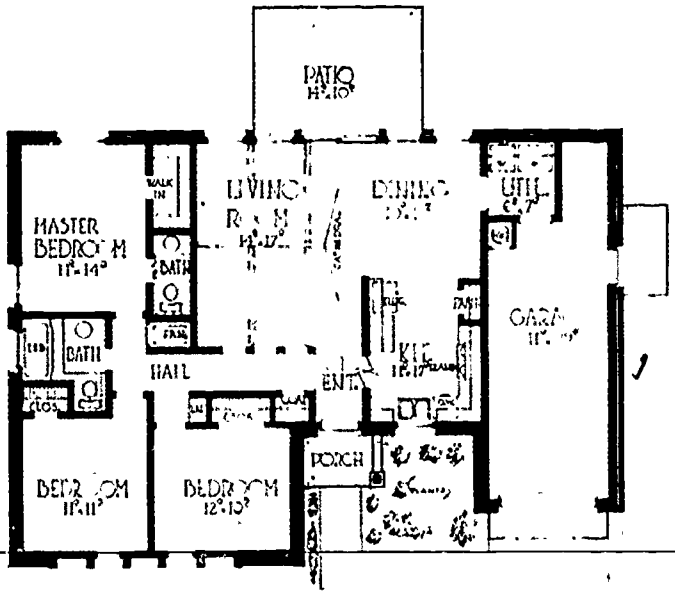

Open Plan

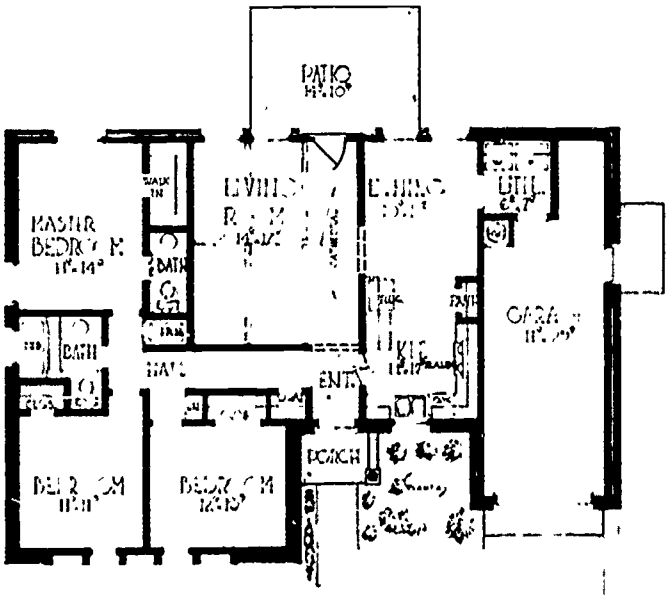

Closed Plan

Dining Room

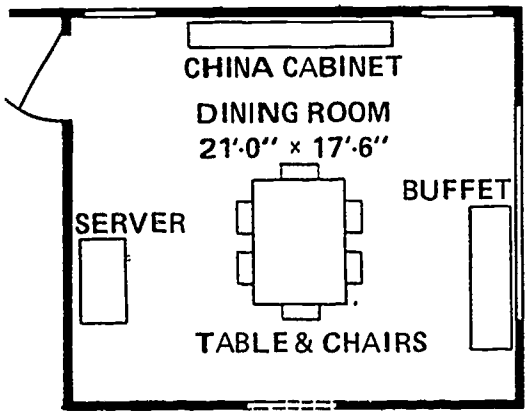

Typical Furniture Arrangement

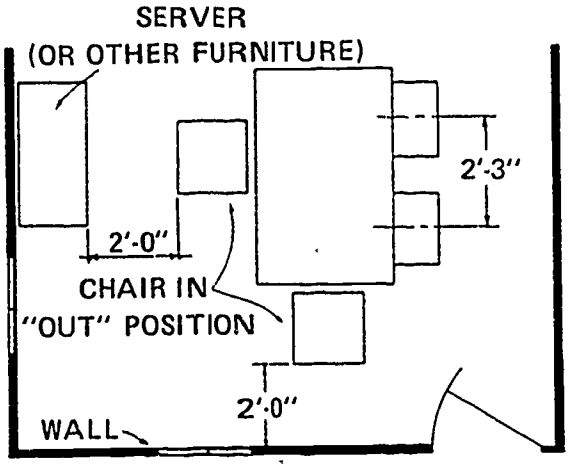

Clearances

Kitchen Arrangements

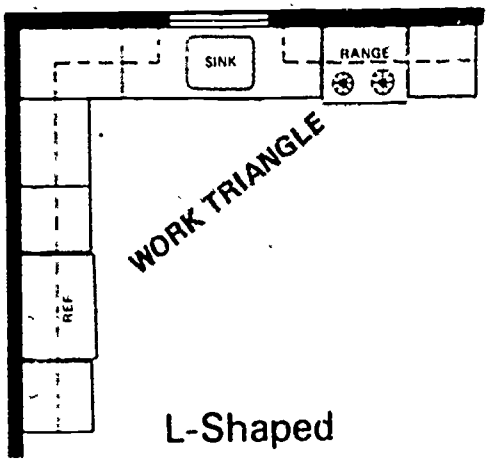

L-Shaped

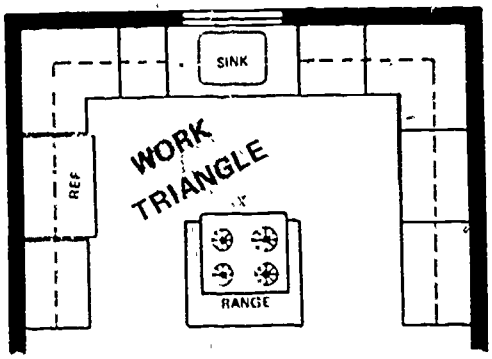

Island

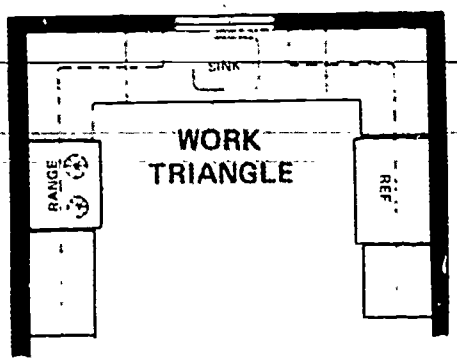

U-Shaped

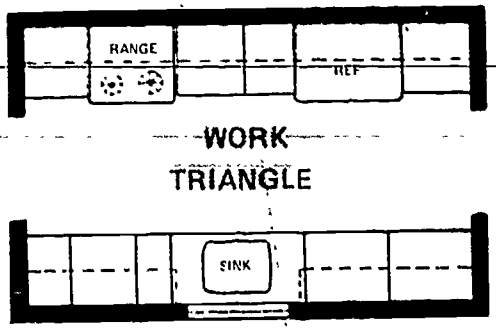

Corridor

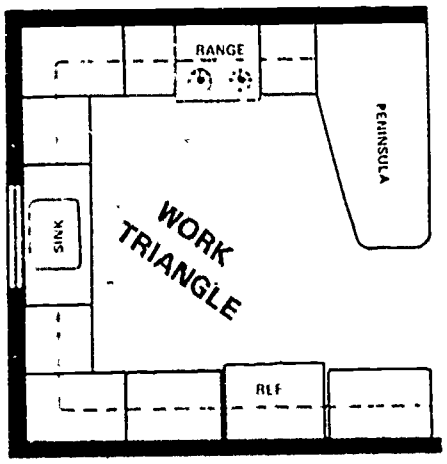

Peninsula

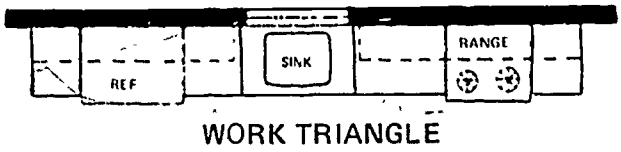

Straight Line (One wall)

Kitchen

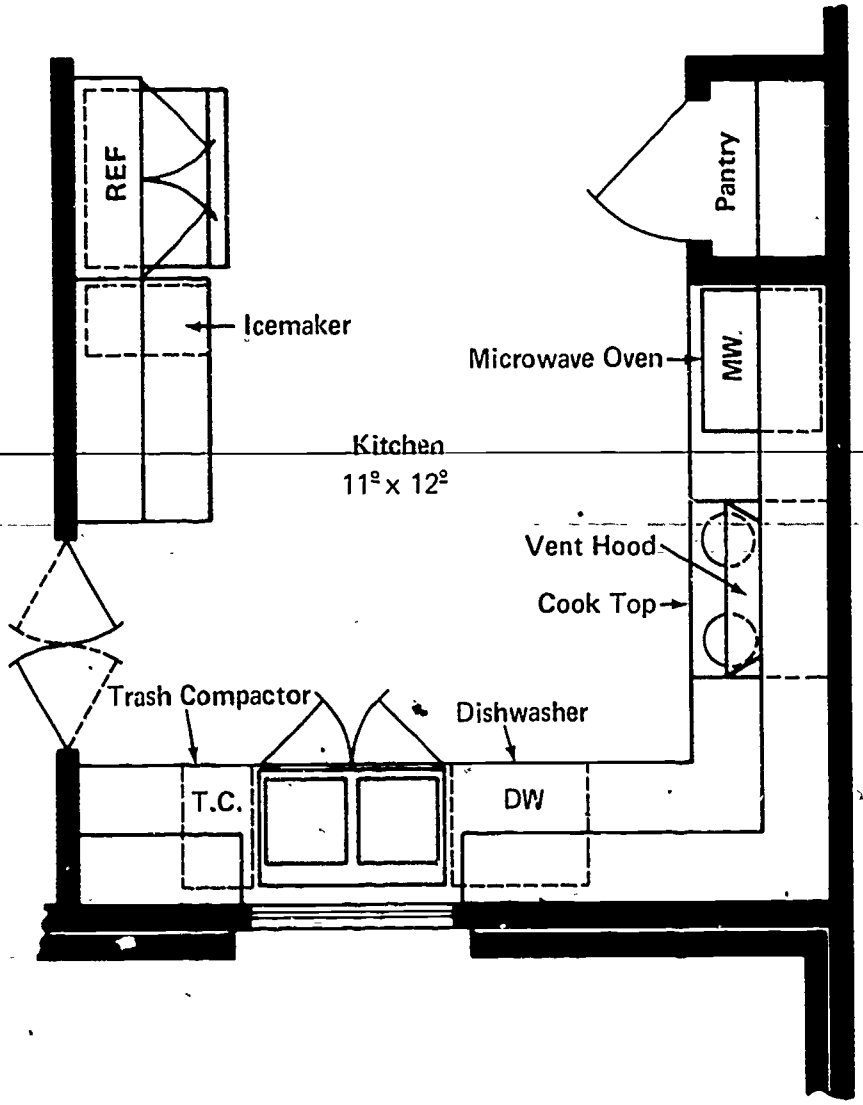

Storage is Placed Near Each Appliance

Utility Room

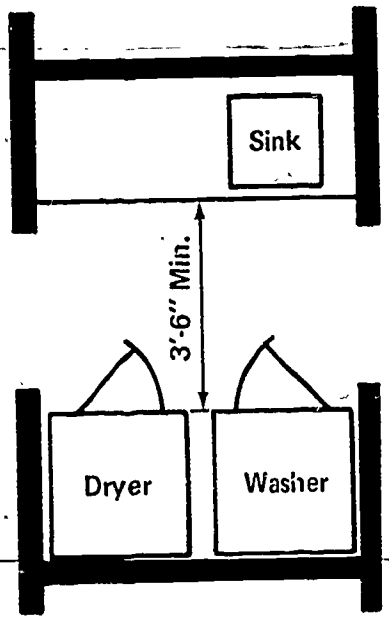

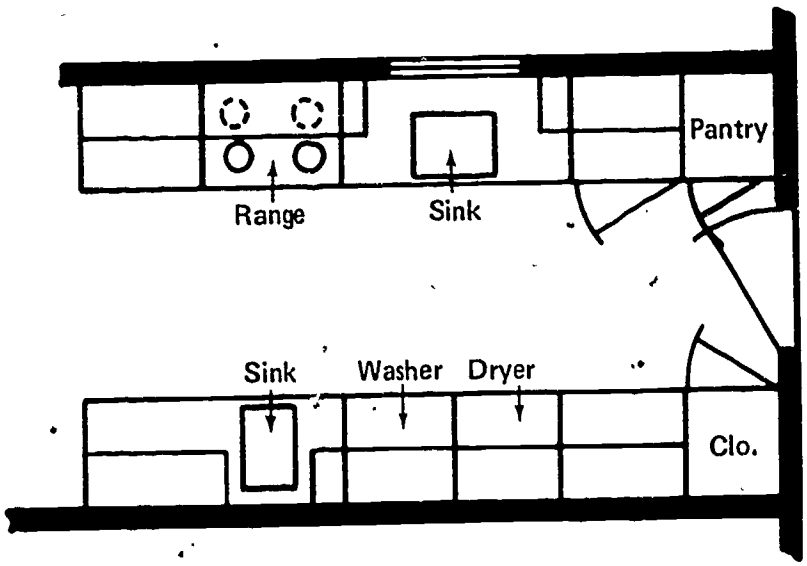

Kitchen/Utility Room Combination

Bedroom

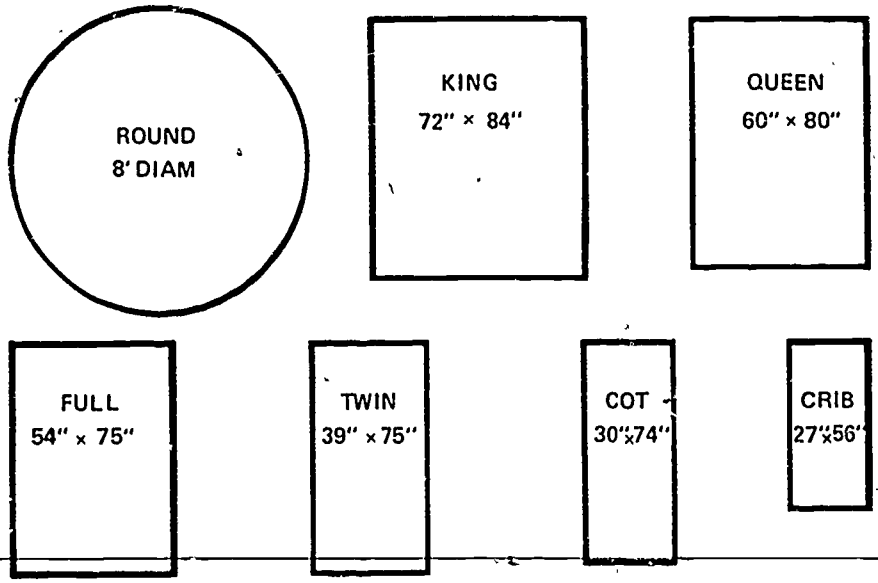

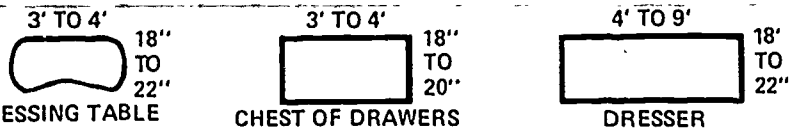

Typical Bedroom Furniture Sizes

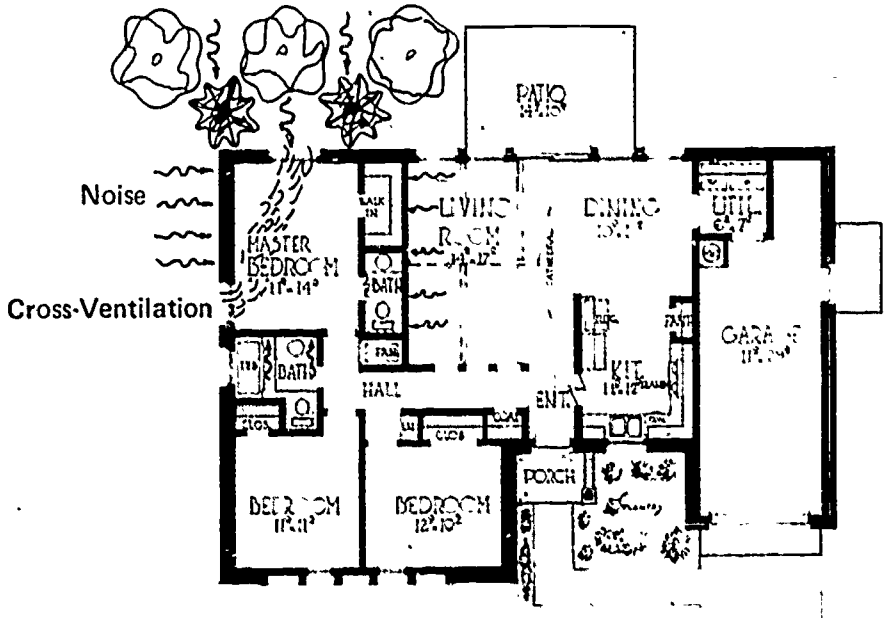

Noise Prevention and Cross-Ventilation

Bathroom Clearances

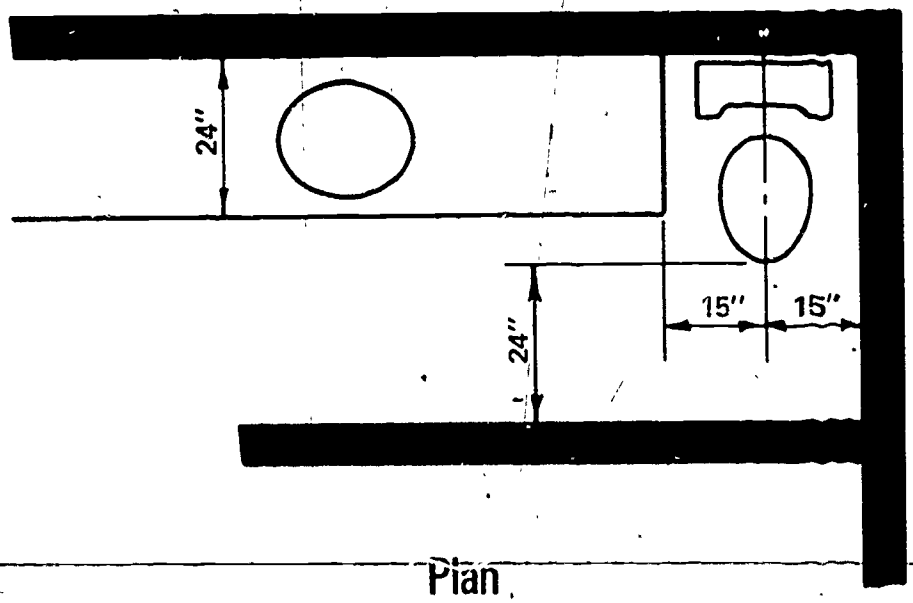

Plan

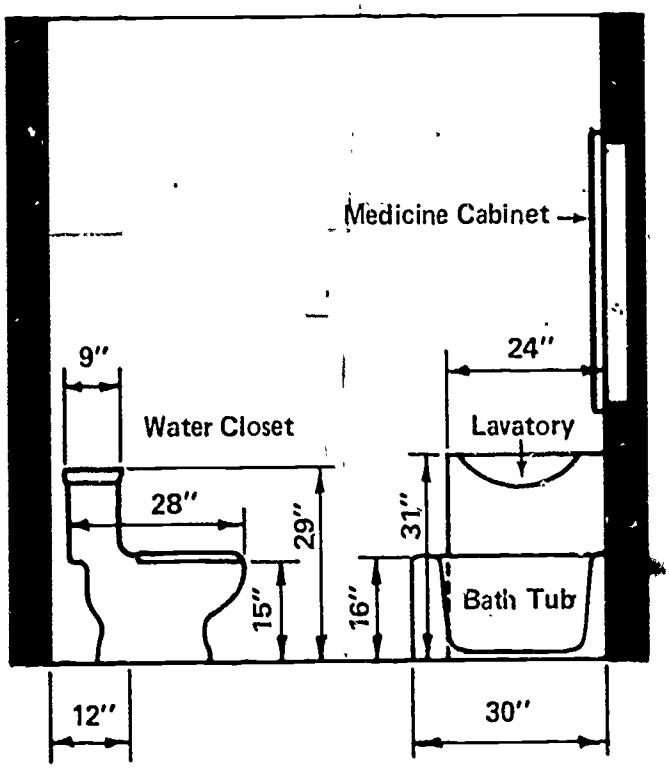

Elevation

Bathroom Sizes

4'-3" × 4'-3"

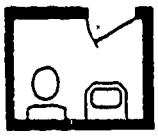

5'-6" × 4'-3"

½

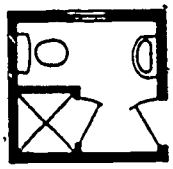

6'-0" × 5'-6"

4'-6" × 5'-6"

8'-6" × 3'-0"

¾

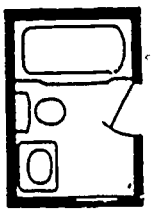

5'-0" × 7'-6"

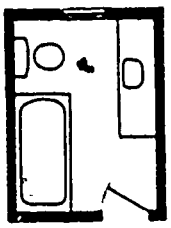

6'-0" × 8'-0"

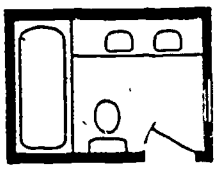

8'-0" × 5'-6"

Full

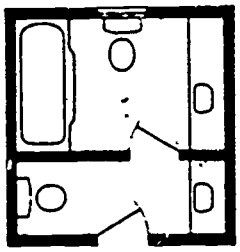

9'-0" × 9'-0"

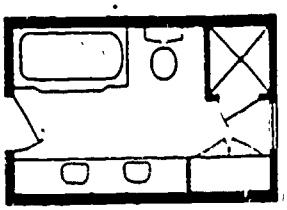

11'-0" × 7'-0"

Luxury

Traffic Patterns

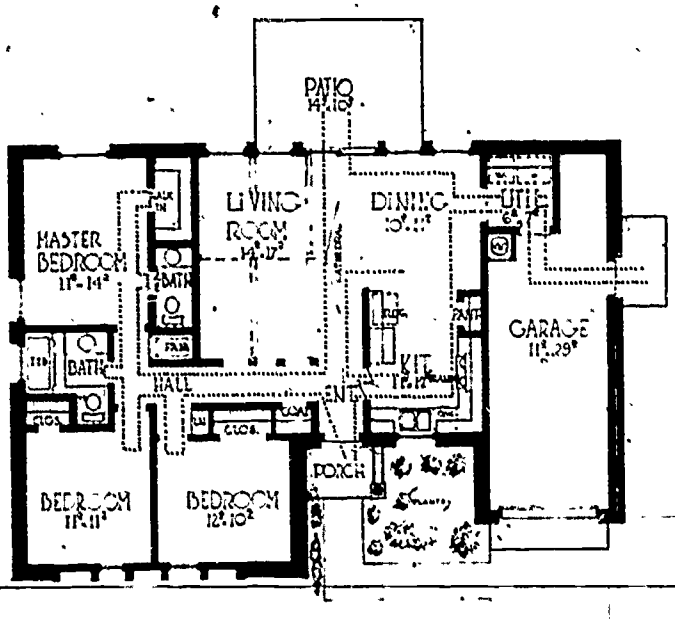

Well Designed

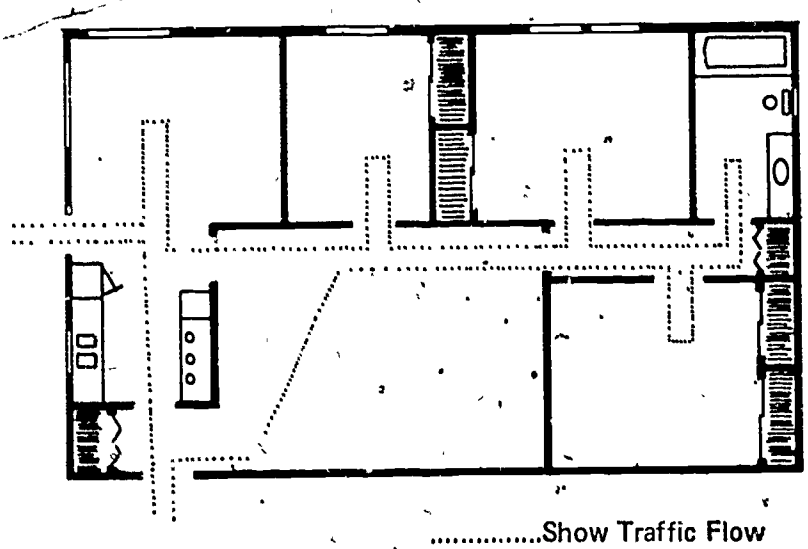

.....Show Traffic Flow

Poorly Designed

Storage Areas

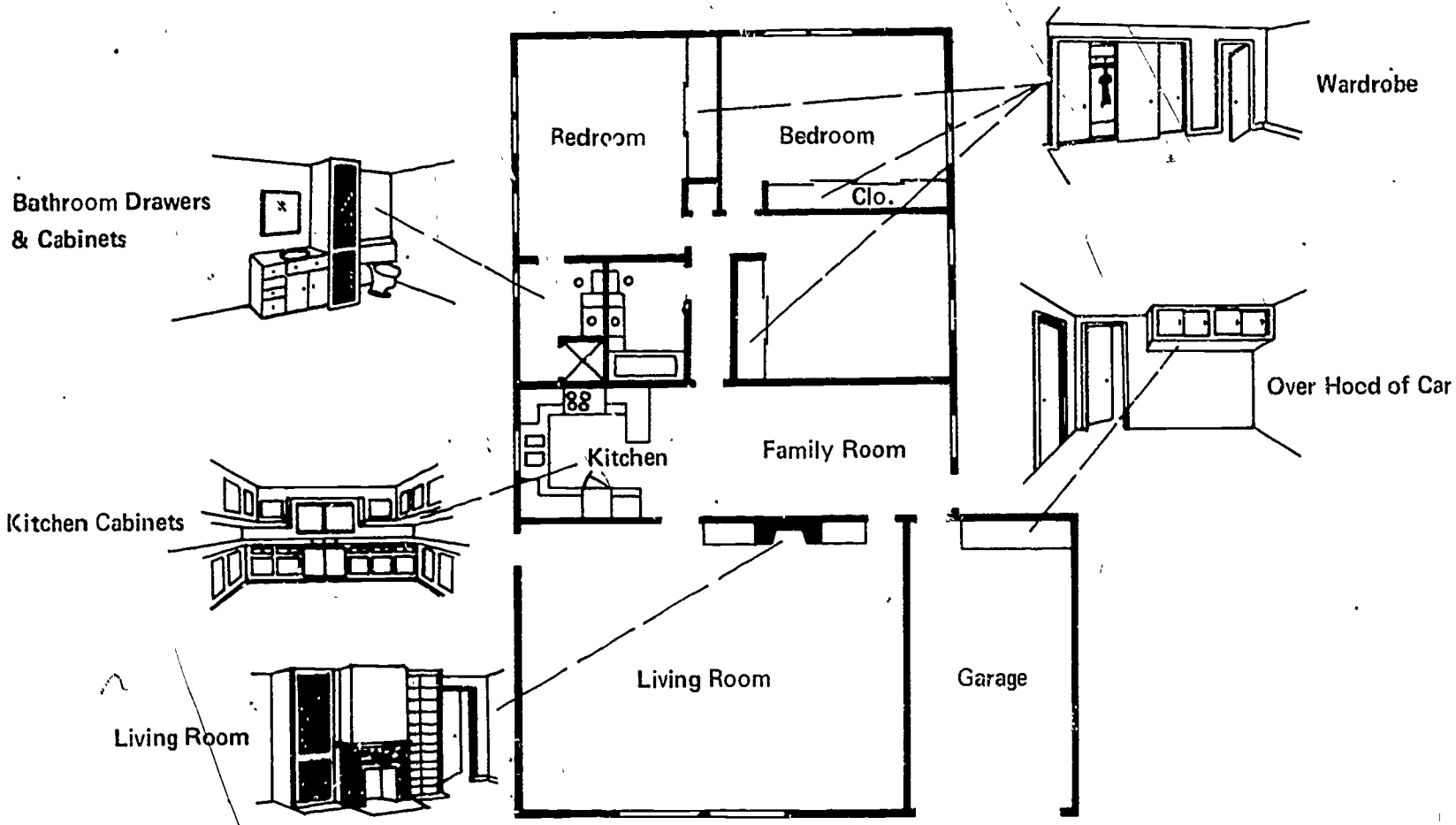

160

RESIDENTIAL DESIGN
UNIT IV

ASSIGNMENT SHEET #1--DETERMINE CLIENT NEEDS

Directions. Select a person as a prospective client who is interested in having you design and plan a house. Use the checklist on the following page to determine the specific information needed prior to beginning the plan. After completing the checklist, write short general statements of what the client wants, needs, and can afford. Review these statements and the checklist with the client to clear up any problems.

(NOTE: Often a client wants and needs more than he/she can afford.)

A. What client wants--

B. What client needs--

C. What client can afford--

D. How much square footage client can get for this amount--

(NOTE: Refer to instructor for local building costs per square foot.)

ASSIGNMENT SHEET #1

PLANNING CHECKLIST FOR _____
(Client)

1 Site

_____ Size of lot
_____ Shape of lot
_____ Contour of lot
_____ Utilities available
_____ Drainage (good, poor)
_____ Type of trees, if any
_____ Direction of most desirable view
_____ North direction
_____ Convenience to schools, shopping, churches, etc.
_____ Satisfactory topsoil
_____ Other

2. Occupants

_____ Number and age of adults
_____ Number and age of boys
_____ Number and age of girls
_____ Profession of owner
_____ Provision for guests
_____ Provision for maid, if any
_____ Others (in-laws, etc.)
_____ Pets

3 Individual Requirements

_____ Formal entertaining
_____ Separate formal dining area
_____ Informal living areas
_____ Outdoor living and eating areas
_____ Supervised outdoor play area
_____ Nursery
_____ Recreation areas
_____ Hobby areas (music, sewing, woodworking, gardening, etc.)
_____ Study or reading areas
_____ Laundry area
_____ Screened porch or breezeway
_____ Other

4 General Design

_____ One-story
_____ Two story
_____ Split level
_____ Crawl space
_____ Concrete slab
_____ Basement
_____ Traditional exterior
_____ Contemporary exterior
_____ Type of roof
_____ Exterior materials (brick, clapboard, stone, board-and batten
_____ Finish floor materials
_____ Garage (number of cars)
_____ Carport (number of cars)
_____ Provision for future expansion
_____ Open planning
_____ Other

5. Budget Restrictions

_____ Size of house in sq. ft. (1000 and under, 1500, 2000, 2500 & over)
_____ How house is to be financed
_____ Number of bathrooms (tub or shower)
_____ Wall and floor material
_____ Fireplaces
_____ Type of entrance
_____ Quality of interior trim
_____ Quality of exterior trim

6. Mechanical Equipment

_____ Central heating (warm air, hot water, radiant, heat pump, etc.)
_____ Air conditioning (central or other)
_____ Washer/dryer
_____ Dishwasher
_____ Garbage disposal
_____ Exhaust fans
_____ Water softener
_____ Size of hot water heater
_____ Others

7. Storage Areas

_____ Entrance closet
_____ Bedroom closets
_____ Linen closets
_____ Toy storage
_____ Kitchen equipment storage
_____ Cleaning equipment storage
_____ Tool storage
_____ China storage
_____ Gardening equipment storage
_____ Hobby equipment storage

RESIDENTIAL DESIGN
UNIT IV

ASSIGNMENT SHEET #2--PLAN A KITCHEN

Directions: Pl n a kitchen by using the procedure in the following example.

Example:

1. Determine overall room size

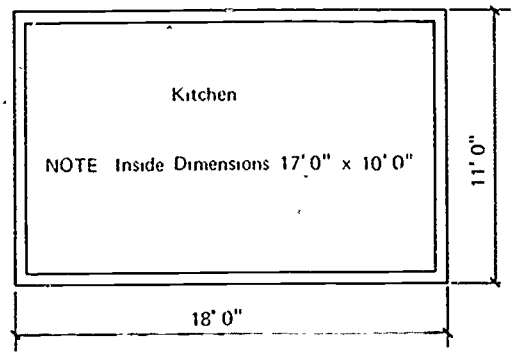

2. Locate and label all openings
3. Determine kitchen arrangement (Transparency 3)

   (NOTE: A U-shaped kitchen is used in this example.)
4. Determine areas for base cabinets and appliances

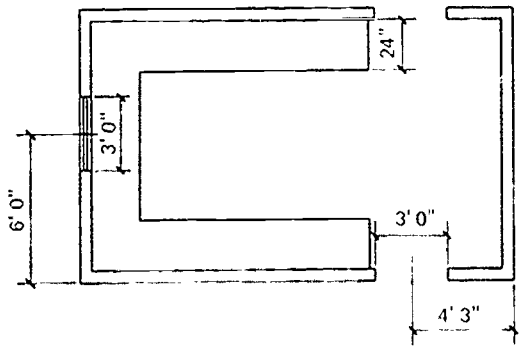

5. Locate overhead cabinets

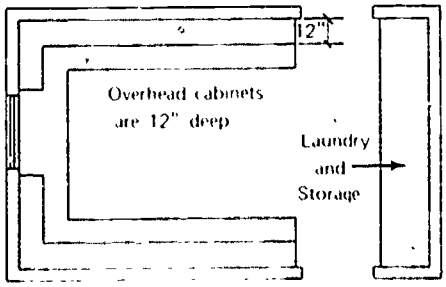

ASSIGNMENT SHEET #2

6. Arrange the appliances

7. Detail all areas accurately and dimension

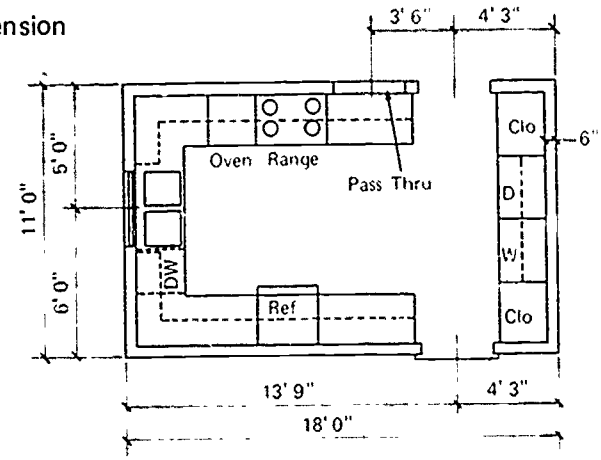

Problem: Draw a new plan for the kitchen below including details and dimensions. Outside walls can not be changed. Include a work triangle.

Scale 3/16"=1'-0"

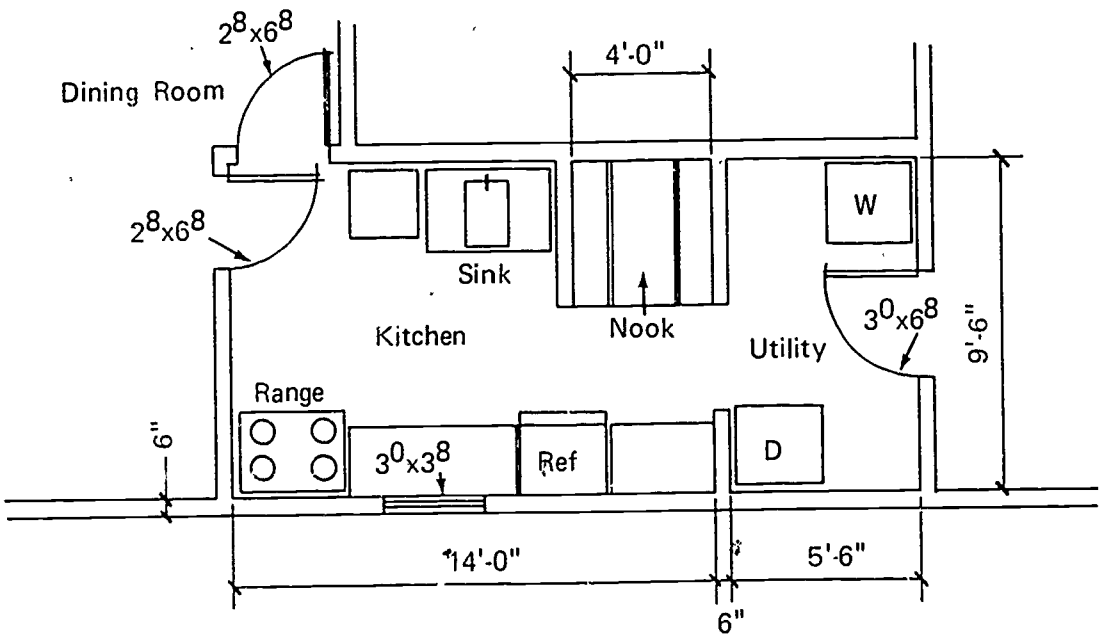

RESIDENTIAL DESIGN
UNIT IV

ASSIGNMENT SHEET #3--PLAN A SLEEPING AREA

Directions. Draw a new plan for the sleeping area below which is for a family of four; 2 adults, 1 boy, and 1 girl.

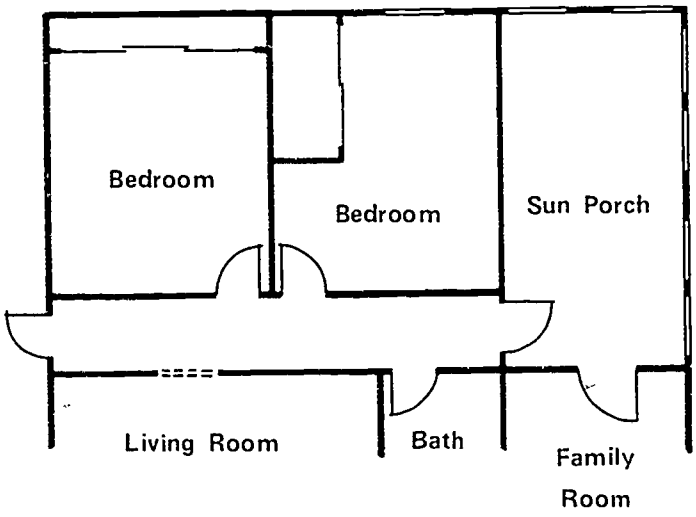

RESIDENTIAL DESIGN
UNIT IV

ASSIGNMENT SHEET #4--PLAN A BATHROOM

Directions: Plan bathrooms for the following problems.

Problem A: Add lavatory, tub, and toilet to these plans; place door in any convenient location.

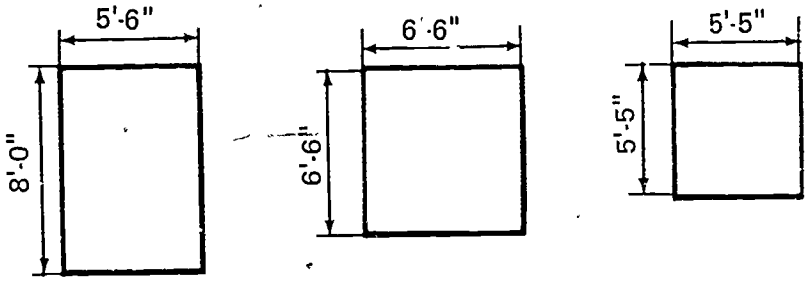

Problem B: Add storage to the bathroom below. You may want to draw a new plan for this bathroom but size and door location may not be changed.

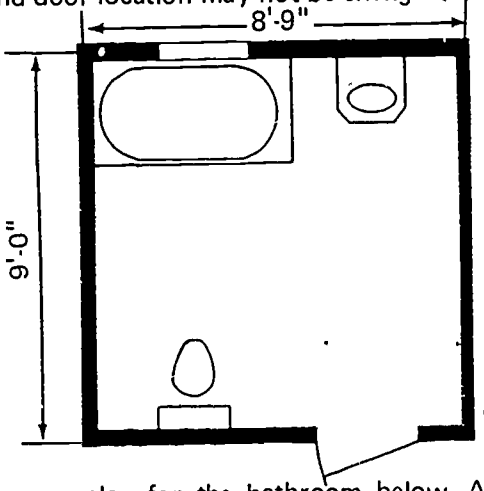

Problem C: Draw a new plan for the bathroom below. Add needed storage but do not change size or door location.

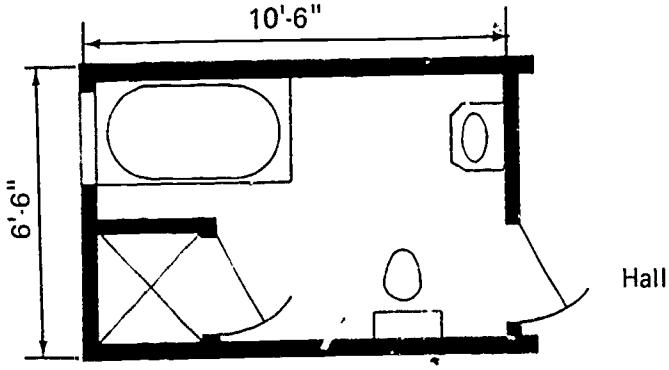

RESIDENTIAL DESIGN
UNIT IV

ASSIGNMENT SHEET #5--PLAN TRAFFIC PATTERNS

Directions: Examine the following floor plans to determine the traffic flow. Draw arrows to indicate the heaviest traffic patterns. List ways that you would suggest changing the plans to improve the flow of traffic.

(NOTE: If time permits, you may wish to redraw the plans to show the suggested improvement in the flow of traffic throughout the houses.)

Problems:

A.

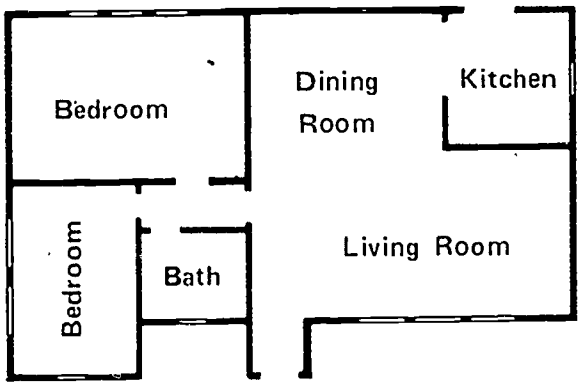

B.

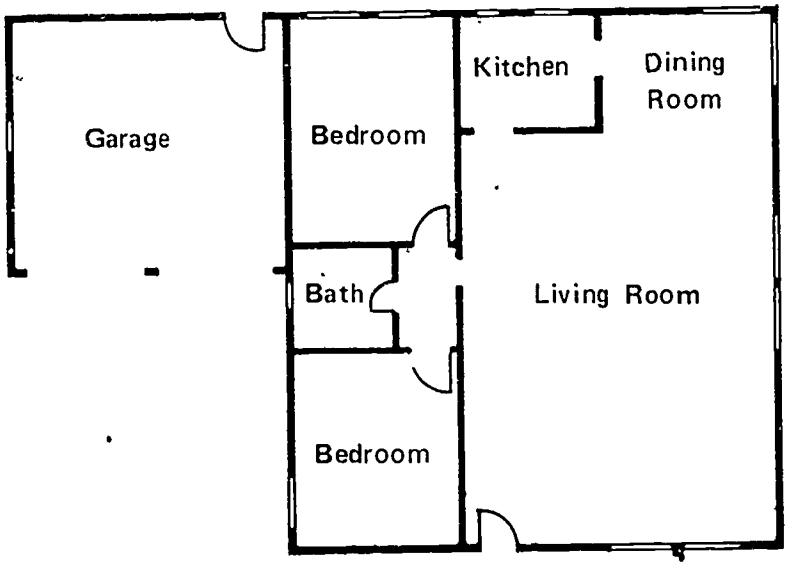

RESIDENTIAL DESIGN
UNIT IV

ASSIGNMENT SHEET #6--PLAN STORAGE FACILITIES

Directions: After carefully studying the following plans, determine what storage space you would recommend adding. Draw this storage space on the plan and label.

Problems:

A.

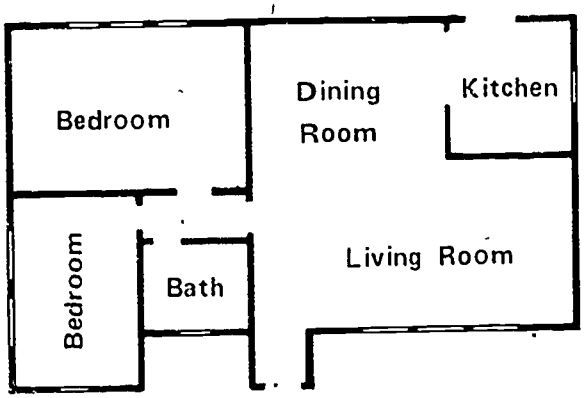

B.

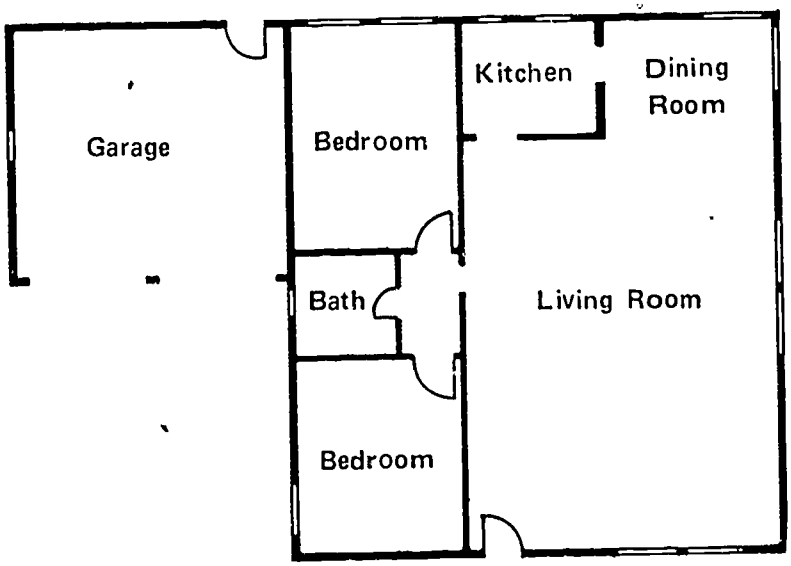

RESIDENTIAL DESIGN
UNIT IV

ASSIGNMENT SHEET #7--DEVELOP A PRELIMINARY RESIDENTIAL SKETCH

Directions: Use the following information to develop a preliminary residential sketch.

Problem:

You are to design a residence for a Dallas couple and their one child. Your client is a professor of political science at SMU. His wife is an art instructor at a local private school and also very active in volunteer social work in the Dallas area. He is 38 and she is 36. Their son, 15, is a sophomore in high school.

The husband's leisure-time activities include research and study at home and outdoor activities such as mountain climbing, camping, and flying. His wife likes to paint, garden, and join her husband camping and mountain climbing. They frequently entertain groups ranging from small dinner parties to 20 or 30 at a cocktail party. Their son's hobby is electronics. He also shares his parent's enthusiasm for the outdoors.

They have purchased a 130' x 90' corner lot in the rapidly developing northeast part of Dallas. A beautiful creek runs across the back corner of the property. The lot is heavily wooded. The client insists that the property remain undisturbed and none of the existing trees cut down except where construction is necessary.

The residence is to be a one-story, wood-frame structure. The neighborhood deed restrictions state at least 75% of the exterior wall (non-window area) must be brick or masonry. The restrictions also state that no building can be constructed within 25'-0" of any property line facing a street or within 10'-0" of any side property line.

The clients have set a budget of $90,000 to $100,000, not counting the cost of the land. Maximum square footage of the house is to be 2,600 SF including car storage.

This is to be a completely original design of your own choosing. The design solution should be a bold and exciting expression of contemporary architecture. The clients want neither the type of house you can find on every street in Dallas today nor a period piece or social symbol. The clients have established the following as their basic requirements.

1. Small entry area with a closet.
2. Living area with a fireplace and wet bar area; a warm informal atmosphere with a good view of the outdoors.
3. Dining area with an informal atmosphere.
4. Kitchen with ample space for food preparation, large storage, and pantry plus small, informal, eating area with outside view and access to patio.
5. Powder room near entry with access to living area, dining area, and patio.
6. Landscaped patio overlooking the creek for outdoor entertaining and relaxation.

ASSIGNMENT SHEET #7

7. Utility area for washer, dryer, and freezer with small storage closet, and laundry sink.

8. Master bedroom with space for king size bed, private bath, dressing areas, large closets, and access to a private patio.

9. Boy's bedroom with workspace for electronics, study area, ample storage and closet areas, and access to bath.

10. Guest bedroom with bath.

11. Small study with fireplace, next to master bedroom.

12. Mechanical equipment area--hot water heater, air conditioning equipment, and heater. Area should be centrally located in the house.

13. Garage or carport for two cars.

14. Storage of 30 SF minimum for lawn, garden, and camping equipment.

15. Ample general storage (linen closets, shelves, etc.)

16. Any other area the designer feels necessary that can be included within the maximum square footage.

The following is a statement in the client's own words:

"We live in a quiet, informal, relaxed atmosphere. We do not like a house that has a series of boxes for rooms. Spaces that flow into one another and offer multiple use of the rooms are better for us. We love the out-of-doors, but we demand and enjoy our privacy in our surroundings. The distinct contrast between the inside of our home--the firelight, the books, and the paintings and the natural outside should provide us with many years of pleasurable experience. All major living areas--living room, dining room, kitchen, and bedrooms--must have a view of the exterior.

The main room will be the living room. It should be a large, warm, friendly, and inviting room. We do a lot of entertaining, and this room will be the main focal point for our friends and guests. It should be oriented toward a fireplace. Large comfortable seating areas must be provided. The room should open onto an outdoor patio. We see this room as having space and dignity and grace and warmth of tone, a sense of rich inwardness, accented by the outside. Sunken or high ceiling spaces would be appropriate.

Much of our entertaining is small dinner parties for six to ten people. The dining room must not seem to be a completely separate area of the house, but a warm and friendly space in which to enjoy one's friends and good food. The space should be informal with an intimate atmosphere to enhance the friendly mood at a dinner. It must be very accessible to the kitchen and provide storage space for linens, tableware, and wine. Our dining table seats six but can be expanded to seat ten.

The kitchen must not be "clinical" in atmosphere. It should be warm and sociable. It must provide sufficient preparation areas, maybe a kitchen island, space for refrigerator and a freezer, and ample storage and pantry areas. This does not necessarily mean a lot of square footage. The kitchen should be close to the carport or garage for bringing in groceries and accessible to the patio for outdoor eating and entertaining. An intimate, informal family eating area with a view of the creek must also be provided.

ASSIGNMENT SHEET #7

The master bedroom suite is to be our retreat. We want a light, airy space with some areas of glass to provide sunlight and a view. The adjacent study area is for reading, watching TV, or study. Ample bookshelves are necessary. Bath and dressing areas should approach the luxurious. A private outdoor patio is extremely desirable.

Our son's bedroom should be both a bedroom and a study area. He is approaching manhood. We want him to have freedom in his surroundings to develop. A nice view, workspace for his electronic experiments, private bath, and ample storage areas are necessary.

The guest room should be a relatively small bedroom for our frequent overnight house guests. Closet space must be provided. Access to a bath area is mandatory. This may be in a compartmentalized arrangement with the powder room, or boy's bath, or a small private bath for the guest room only.

We want the contrast of spaces in our home to provide an ever changing atmosphere. Changes in floor levels are required as are skylights and window areas that provide for changes of sunlight during the day. The sense of contrasting vertical space and form, creating visually large and interesting areas, is more important to us than ample square footage.

Energy conservation is extremely important to us. In these days of high fuel costs and shortages, our new home must be as energy efficient as possible."

(NOTE: Keep your sketch for use in later units.)

RESIDENTIAL DESIGN
UNIT IV

NAME _____

TEST

1. List five items needed from a client when planning a residence.

   a. _____

   b. _____

   c. _____

   d. _____

   e. _____

2. Select characteristics of a lot which can affect building design by placing an "X" in the appropriate blanks.

   _____a. Occupation of owners

   _____b. Relationship of front elevation and entries to the street

   _____c. Slope of lot

   _____d. Amount of topsoil

   _____e. Style of furniture wanted

   _____f. View

   _____g. Shape of lot

3. Distinguish between rooms located in basic areas of a house by placing an "L" for living area, an "SE" for service area, and an "SL" for sleeping area in the appropriate blanks.

   _____a. Workshop

   _____b. Family room

   _____c. Bedroom

   _____d. Laundry

   _____e. Entrance

   _____f. Kitchen

4. Match the rooms in the living area on the right with the correct characteristics.

_____a. May be designed to serve as a guest bedroom

_____b. Near the kitchen and usually near the living room

_____c. Area through which people enter the house

_____d. Primarily used for formal or informal relaxation and recreation; may be used for almost any purpose

_____e. May be located in basement, attic, or main level of house, depending upon available space; used as a play room or game room

_____f. Outside near entrance according to occupants' needs/uses

_____g. Use depends on family; usually for quiet activities such as work or study

_____h. Used for family centered activities such as TV, music, or table games; usually located near the kitchen

_____i. Used for formal or informal dining

1. Entrance
2. Living room
3. Dining room
4. Recreation room
5. Family room
6. Den
7. Porch

5. Match the rooms in the service area on the right with the correct characteristics.

_____a. Attached, detached, or connected by a breezeway to the other service areas

_____b. Soundproofing and fire protection may be added; workbench; storage for supplies and tools

_____c. Wash, store, and cook food

_____d. May serve as laundry in addition to other areas such as storage, sewing, or food preservation

_____e. Adjacent to dining room and outside entrance

_____f. Provide shelter for one or more vehicles

_____g. Wash, dry, and care for occupants' clothing

1. Kitchen
2. Laundry
3. Utility room
4. Garage or carport
5. Workshop

6. Complete the following chart of characteristics of rooms in the sleeping area.

Room	Purpose	Suggested Minimum Size	Extra Features	Location
_____	Quiet activities such as sleeping, resting, or reading	Room--100 sq. ft. Door--2'-8" x 6'-8"	_____ _____ _____	Quiet part of house
Bathroom	_____ _____ _____	Room-- _____ Door--2'-0" x _____	Storage space; ventilation	_____ _____ _____

7. State the general rule to remember when planning the flow of traffic through a house.

_____

_____

8. Select true statements concerning factors to observe when planning the flow of traffic between rooms by placing an "X" in the appropriate blanks.

_____a. Plan for the heaviest flow of traffic to occur between the kitchen and dining areas, the bedrooms and bath, and the living and dining areas

_____b. A kitchen does not need to be adjacent to service entrance

_____c. Always locate the garage or carport adjacent to the bedrooms and have an entrance permitting easy access into them

_____d. Dining area should be next to the bedrooms and easily accessible

_____e. Each bedroom should have access to kitchen

_____f. Bedrooms should have easy access to a bath

_____g. Plan to be able to enter a house and go the bedroom area or bath without crossing through the living area

9. Match categories of storage facilities on the right with the correct descriptions.

_____a. Shallow closets in the wall holding cupboards, shelves, and drawers

_____b. Shallow clothes closets built into the wall

_____c. Free standing pieces of furniture used for storage

_____d. Free standing storage facilities which may be used to divide a large space into smaller areas

_____e. Closets which are large enough to walk into

1. Wardrobe closets
2. Walk-in closets
3. Wall closets
4. Chests and dressers
5. Room dividers

10. Sequence the steps for making a preliminary residential sketch by placing the correct sequence numbers in the appropriate blanks.

_____a. Combine rooms into areas

_____b. Make furniture templates

_____c. Make a list of furniture needed

_____d. Determine room dimensions

_____e. Determine client needs

_____f. Combine areas into floor plan

_____g. Design outside by projecting elevations

_____h. Arrange furniture templates

_____i. Select an architectural style

_____j. Determine sizes of furniture

11. Demonstrate the ability to:

a. Determine client needs.

b. Plan a kitchen.

c. Plan a sleeping area.

d. Plan a bathroom.

e. Plan traffic patterns.

f. Plan storage facilities.

g. Develop a preliminary residential sketch.

(NOTE: If these activities have not been accomplished prior to the test, ask your instructor when they should be completed.)

RESIDENTIAL DESIGN
UNIT IV

ANSWERS TO TEST

1. a. Financial ability of client
   b. What the client wants
   c. Minimum requirements of the client
   d. Client's preference in architectural style
   e. Lot size and location

2. b, c, f, g

3. a. SE
   b. L
   c. SL
   d. SE
   e. L
   f. SE

4. a. 6
   b. 3
   c. 1
   d. 2
   e. 4
   f. 7
   g. 6
   h. 5
   i. 3

5. a. 4
   b. 5
   c. 1
   d. 3
   e. 1
   f. 4
   g. 2

6.

Room	Purpose	Suggested Minimum Size	Extra Features	Location
Bedroom	Quiet activities such as sleeping, resting, or reading	Room--100 sq. ft. Door--2'-8" x 6'-8"	Closets; windows and/or ventilation	Quiet part of house
Bathroom	Personal hygiene; may provide other functions such as laundry or dressing	Room--5' x 8' Door--2'-0" x 6'-8"	Storage space; ventilation	Near bedrooms or near service area

7. People must be able to move from room to room and from one part of the house to another with a minimum of congestion and unnecessary steps

8. a, f, g

9. a. 3
   b. 1
   c. 4
   d. 5
   e. 2

10. a. 8 f. 9
    b. 5 g. 10
    c. 2 h. 6
    d. 7 i. 3
    e. 1 j. 4

11. Evaluated to the satisfaction of the instructor

STRUCTURAL SYSTEMS AND BUILDING MATERIALS
UNIT V

UNIT OBJECTIVE

After completion of this unit, the student should be able to identify types of framing systems, framing members, and cornices. The student should also be able to determine the sizes of wood floor joists, roof rafters, wood girders, steel beams, and headers. This knowledge will be evidenced by correctly performing the procedures outlined in the assign ment sheets and by scoring 85 percent on the unit test.

SPECIFIC OBJECTIVES

After completion of this unit, the student should be able to:

1. Match terms related to structural systems with the correct definitions.
2. Identify types of two-story framing systems.
3. Select types of wood floor sill constructions.
4. Identify types of wood floor joist framings.
5. State the purpose of bridging.
6. Identify wall framing members.
7. List three methods of frame bracing.
8. Complete a list of types of sheathing.
9. Identify types of roofs.
10. Identify roof framing members for various roofs.
11. Identify types of cornices.
12. Identify types of post and beam framing.
13. Match building materials with the correct definitions.
14. Complete a chart of material symbols used on plan, elevation, and section drawings.
15. Select materials in a concrete mix.
16. Name the physical properties that affect strength of concrete.
17. Match construction masonry products with the correct uses.

18. Match glass products with the correct uses.
19. Complete a list of the uses of plastic in building construction.
20. Match types of insulation materials with the correct characteristics.
21. Match metal products with the correct uses.
22. Select materials commonly used to cover a roof.
23. List wood products used in construction.
24. Complete a chart of nominal and actual sizes for dimension lumber.
25. List information which must be given to a truss manufacturer.
26. Match structural design terms with the correct definitions.
27. Match structural design terms with the correct formulas.
28. Complete a chart of abbreviations.
29. Demonstrate the ability to:
    a. Determine sizes of wood floor joists and roof rafters.
    b. Determine sizes of wood girders.
    c. Determine sizes of steel beams.
    d. Determine sizes of exterior or interior wall headers.

STRUCTURAL SYSTEMS AND BUILDING MATERIALS
UNIT V

SUGGESTED ACTIVITIES

I. Provide student with objective sheet.

II. Provide student with information and assignment sheets.

III. Make transparencies.

IV. Discuss unit and specific objectives.

V. Discuss information and assignment sheets.

VI. Make or have made a model of framing members showing wall construction and typical roof members.

VII. Discuss the advantages and disadvantages of each type of wood floor joist framing.

VIII. Show examples of the types of sheathing and discuss the use of each.

IX. Discuss the factors which affect concrete and the accompanying Transparency 17.

X. Visit a lumber yard so students can see the difference between actual and nominal size lumber and types of lumber available.

XI. Have copies of *Architectural Graphic Standards* available to the students for use in Assignment Sheets #1 and #2.

XII. Obtain and provide copies of the *Manual of Steel Construction* for use in Assignment Sheet #3.

XIII. Give test.

(NOTE: You may wish to give this test in two parts since it is long.)

INSTRUCTIONAL MATERIALS

I. Included in this unit:

A. Objective sheet

B. Information sheet

C. Transparency masters

1. TM-1--Platform Framing
2. TM 2--Balloon Framing
3. TM 3--Types of Sill Construction

4. TM 4--Types of Wood Floor Joist Framings
5. TM 5--Bridging
6. TM 6--Wall Framing Members
7. TM 7--Frame Bracing
8. TM 8--Basic Types of Roofs
9. TM 9--Roof Framing Members
10. TM 10--Roof Framing Members (Continued)
11. TM 11--Types of Cornices
12. TM 12--Types of Cornices (Continued)
13. TM 13--Types of Cornices (Continued)
14. TM 14--Types of Beams
15. TM 15--Gypsum Wallboard
16. TM 16--Concrete Materials and Testing
17. TM 17--Water-Temperature Effect on Concrete
18. TM 18--Masonry Products
19. TM 19--Masonry Products (Continued)
20. TM 20--Insulation R Values
21. TM 21--Structural Steel Shapes
22. TM 22--Standard Lumber Sizes
23. TM 23--Trusses
24. TM 24--Structural Design Terms
25. TM 25--Structural Design Terms (Continued)

D. Assignment sheets

1. Assignment Sheet #1--Determine Sizes of Wood Floor Joists and Roof Rafters
2. Assignment Sheet #2--Determine Sizes of Wood Girders
3. Assignment Sheet #3--Determine Sizes of Steel Beams
4. Assignment Sheet #4--Determine Sizes of Exterior or Interior Wall Headers

E. Answers to assignment sheets

F. Test

G. Answers to test

II. References:

A. Wyatt, William E. *General Architectural Drawing.* Peoria, IL 61614: Charles A. Bennett Co., Inc., 1969.

B. Arnell, Alvin. *Standard Graphical Symbols.* New York: McGraw-Hill Book Co., 1963.

C. Goodban, William T. and Jack J. Hayslett. *Architectural Drawing and Planning.* St. Louis: Gregg Division/McGraw-Hill Book Co., 1979.

D. Hepler, Donald E. and Paul I. Wallach, *Architecture Drafting and Design.* St. Louis: Gregg Division/McGraw-Hill Book Co., 1977.

E. Hornung, William J. *Architectural Drafting.* Englewood Cliffs, NJ: Prentice-Hall, Inc., 1966.

F. *HUD Minimum Property Standards.* Washington, D.C.: U.S. Department of Housing and Urban Development, 1973.

G. Kicklighter, Clois E. and Ronald J. Baird. *Architecture Residential Drawing and Design.* South Holland, IL 60473: Goodheart-Willcox Co., Inc., 1973.

H. *Manual of Acceptable Practices to the HUD Minimum Property Standards.* Washington, D.C.: U.S. Department of Housing and Urban Development, 1973.

I. Newman, Morton. *Standard Structural Details for Building Construction.* St. Louis: Gregg Division/McGraw-Hill Book Co., 1968.

J. Obermeyer, Thomas. *Architectural Technology.* St. Louis: Gregg Division/McGraw-Hill Book Co., 1976.

K. Ramsey, Charles G. and Harold R. Sleeper. *Architectural Graphic Standards.* New York: John Wiley & Sons, Inc., 1980.

L. Sleeper, Harold R. *Architectural Specifications.* New York: John Wiley & Sons, Inc., 1967.

STRUCTURAL SYSTEMS AND BUILDING MATERIALS
UNIT V

INFORMATION SHEET

I. Terms and definitions

A. Platform framing system--System used in a two-story house where the second story framing is the same as first story.

B. Balloon framing system--System which uses a continuous stud for the full two stories with exterior and interior supporting walls resting on the sill

C. Member--Any part of a building unit

(NOTE: This is usually a structural unit.)

D. Sill plate--The lowest member of the frame of a structure, resting on the foundation and supporting the floor joists or the interior walls

(NOTE: This is usually a 2 x 6 or a 2 x 8.)

E. Header--A horizontal member placed perpendicular to floor or ceiling joists and to which joists are nailed in framing floors, a chimney, a stairway, or other openings

F. Sill sealer--Composed of an insulation material (mastic or caulking) which is placed between sill and foundation

G. Joist--A horizontal structural member which supports the floor or ceiling system

H. Sole plate--The bottom horizontal member of a frame wall

I. Top plate--The top horizontal member of a frame wall

J. Partition--A wall that subdivides spaces within any story of a building

K. On center (O.C.)--The measurement of spacing for studs, rafters, joists, and other framing members from the center of one member to the center of the next

L. Bridging--Small wood or metal members that are inserted in a diagonal position between the floor joists at midspan

M. Solid bridging--Solid wood blocking used between floor joists to keep joists vertical and in alignment

N. Ribbon--A wood strip let into the studding to provide a bearing surface for joists

O. Ledger--A wood strip nailed to the lower side of a girder to provide a bearing surface for joists

INFORMATION SHEET

P. Girder--A large horizontal structural member used to support the ends of joists and beams or to carry walls over openings

Q. Stirrup--A metal U-shaped strap used to support framing members

R. Trimmer--The longest framing member around a rectangular opening into which a header is joined

S. Cripple--A structural member that is cut less than full length

T. Cornice--That portion of a roof that projects out from the wall

U. Fascia--A horizontal board nailed onto the ends of the rafters

V. Soffit--The underside of an overhanging cornice

W. Lookout--A short wooden framing member used to support an overhang portion of the roof

X. Frieze--A horizontal member connecting the top of the siding with the soffit of the cornice

Y. Rafter--A structural member in a roof framework running from the eave to the ridge

Z. Eave--The lower portion of a roof which extends beyond the wall

AA. Ridge--The top edge of the roof where two slopes meet

BB. Parapet wall--A low wall or railing around the edge of a roof

CC. Hip rafter--The diagonal rafter that extends from the plate to the ridge to form the hip

DD. Valley rafter--The diagonal rafter at the intersection of two intersecting sloping roofs

EE. Jack rafter--A rafter that spans the distance from the wall plate to a hip, or from a valley to a ridge

FF. Rise--The measured vertical distance from the top of the wall plate to the intersection of the center line of the rafters

GG. Run--One-half the span given as 12 units

HH. Slope--Ratio between the rise and run of a roof

(NOTE: Slope $= \frac{\text{rise}}{\text{run}}$ or $\frac{6}{12}$.)

INFORMATION SHEET

II. Pitch--The angle of the roof from the ridge to the plate

(NOTE: Pitch = $\frac{\text{total rise}}{\text{total run}}$ or $\frac{6}{24} = \frac{1}{4}$.)

JJ. Span--The horizontal distance from the outside of one stud wall to the outside of the opposite stud wall

KK. Trusses--Structural members arranged and fastened in triangular units to form a framework for support of loads over a long span

LL. Post and beam construction--Wall construction consisting of posts rather than studs

MM. Purlin--Horizontal roof framing member laid perpendicular to rafters over trusses for bracing the roof

NN. Laminated beam--A beam made of superimposed layers of similar materials uniting them with glue and pressure

II. Types of two-story framing systems (Transparencies 1 and 2)

A. Platform

B. Balloon

III. Types of wood floor sill constructions (Transparency 3)

A. Box

B. Balloon

IV. Types of wood floor joist framings (Transparency 4)

A. Lapped

B. Notched

C. Hung with stirrups

D. Framed into steel beam

V. Purpose of bridging (Transparency 5)--To brace the joists

VI. Wall framing members (Transparency 6)

A. Studs

B. Cripple studs

C. Top plate

D. Header

INFORMATION SHEET

E. Rough opening

F. Trimmer

G. Blocking

H. Sole plate

VII. Methods of frame bracing (Transparency 7)

A. Metal straps on exterior walls

B. 1 x 4 set into studs

C. Plywood sheet

VIII. Types of sheathing

A. Solid lumber

B. Plywood

C. Fiberboard

D. Gypsum

E. Plastics

IX. Types of roofs (Transparency 8)

A. Flat

B. Shed

C. Hip

D. Gable

X. Roof framing members for various roofs (Transparencies 9 and 10)

A. Flat

1. Double header

2. Lookout rafter

3. Nailing header

4. Roof joist

5. King rafter

INFORMATION SHEET

B. Shed

1. Common rafter
2. Double plate
3. Stud

C. Hip

1. Ridge
2. Common rafter
3. Hip rafter
4. Hip jack rafter
5. Plate
6. Valley rafter
7. Valley jack rafter

D. Gable

1. Collar beam
2. Common rafter
3. Ceiling joist
4. Double plate
5. Stud

XI. Types of cornices (Transparencies 11, 12, and 13)

A. Open

B. Close box

C. Wide box with lookouts

(NOTE: These may be square cut or plumb cut.)

D. Swept eave

E. Wide box without lookouts

XII. Types of post and beam framing (Transparency 14)

A. Solid

B. Spaced

INFORMATION SHEET

C. Cased

D. False

XIII. Building materials and definitions

A. Cement--A powder of alumina, silica, lime, iron oxide, and magnesia burned together in a kiln to be used as a binding agent in mortar or concrete

(NOTE: This is commonly called Portland cement.)

B. Concrete--A ratio mixture of cement, sand, and aggregate with water; when mixed and cast, it reaches a load bearing design strength in 28 days

C. Aggregate--Clean gravel or crushed rock from 1/4" to 1 1/2" in diameter

D. Admixture--Chemicals used to make the concrete mix more workable, slower or faster in hardening, freeze resistant, or other desired quality

E. Prestressed concrete--Casting concrete used around steel cables or rods which are under tension to counteract stresses caused by external loading

F. Post-tensioned concrete--Concrete used for steel rods in tubes which are placed under tension after concrete has hardened

G. Adobe--Natural sun-dried clays or earth and a binder

H. Kiln-burned brick--Natural clays with chemicals sometimes added for color which are molded to shape, dried, and fired for hardness

I. Sand lime brick--A mixture of sand and lime, molded and hardened under steam pressure

J. Concrete brick--A mixture of cement and fine aggregates, molded into solid or core units and hardened chemically

K. Mortar--Cement, hydrated lime, sand, and water

(NOTE: A typical mortar mixture would be 1 part cement, 1/4 part lime, and 3 parts of sand by volume.)

L. Concrete block--Cement, sand, aggregate, or other lightweight aggregate materials molded and hardened under steam pressure

M. Terra cotta--A type of structural clay tile used for non-load bearing ornamental effects in construction

INFORMATION SHEET

N. Gypsum wallboard--A core of air-entrained gypsum between two layers of treated paper (Transparency 15)

O. Structural clay tile–A product made of materials that are similar to those used in making brick, but it is a larger building unit

P. Glass blocks--Two sections of glass, fused together, creating a partial vacuum

Q. Lumber--Wood cut into pieces of uniform thickness, width, and length

R. Plywood–A wood product consisting of several layers of lumber with the grain at right angles in each successive layer

(NOTE: Exterior plywood is bonded with a waterproof adhesive.)

S. Glue laminated timber--Kiln-dried lumber bonded together in layers with an adhesive to form beams, arches, and other structural members

(NOTE: Standards are controlled by American Institute of Timber Construction.)

T. Structural steel–The term applied to hot-rolled steel sections, shapes, and plates 1/8" thick or greater

(NOTE: This includes fasteners and other devices to complete the steel frame.)

INFORMATION SHEET

XIV. Material symbols used on plan, elevation, and section drawings

(NOTE: Refer to *Architectural Graphic Standards* for symbols not shown.)

Material	Plan	Elevation	Section
Earth	None	None	
Concrete			Same as Plan View
Concrete Block			
Gravel Fill	Same as Section	None	
Wood	Floor Areas Left Blank	Siding Panel	Finish Framing
Brick	Face Common	Face or Common	
Stone	Cut Rubble	Cut Rubble	Cut Rubble
Structural Steel		Indicate by Note	Specify
Sheet Metal Flashing			Show Contour
Insulation	Same as Section	Insulation	Loose Fill or Batt Board
Plaster	Same as Section	Plaster	Stud Lath and Plaster

INFORMATION SHEET

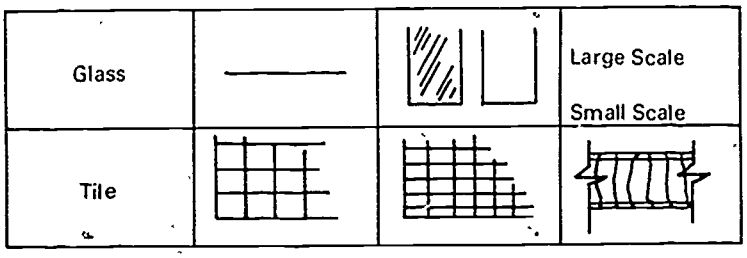

XV. Materials in a concrete mix (Transparency 16)

A. Cement

B. Sand

C. Aggregate

D. Water

(NOTE: Water-cement ratio test minimum is 4" slump.)

E. Admixture

(NOTE: A design mixture for 3000 P.S.I. concrete with a 20% safety factor would be 517 lb. cement [5 1/2 sacks], 1300 lb. sand, 1800 lb. aggregate, and 34 gal. water [6.2 gal. per sack].)

XVI. Physical properties that affect strength of concrete (Transparency 17)

A. Temperature

B. Water

XVII. Construction masonry products and uses (Transparencies 18 and 19)

(NOTE: For special shapes contact local manufacturers.)

A. Cut stone-Used for decorative effects on buildings or non-load bearing walls

B. Adobe--Used for load bearing walls in dry climate regions

C. Concrete brick--Used for decorative effects on buildings or non-load bearing walls

D. Common brick--Used for walls, backing, and other applications where appearance is not important

INFORMATION SHEET

E. Face brick--Manufactured under controlled dimensions, color, and structural qualities for building construction

(NOTE: Defects are sold as common brick.)

F. Glazed brick--Used in decorative and special service applications

G. Fire brick--Used in fireplaces, incinerators, and industrial smelting furnaces

(NOTE: Modular size is different from other brick.)

H. Paving brick--Used in drives or areas where abrasion is a factor

I. Mortar--Used as either plain or colored to cement masonry products together

J. Structural clay tile--Used as non-load bearing partition walls, load bearing walls, backup for certain walls, and as fireproofing around structural steel

K. Concrete block--Used for non-load bearing partition walls, load bearing walls, and foundation walls

L. Tile--Used for floor and wall coverings of residences and commercial buildings that are set in cement, latex adhesive, or an epoxy mortar

(NOTE: Tile consists of terra cotta, quarry, mosaic, or ceramic materials, glazed or unglazed.)

XVIII. Glass products and uses

A. Sheet--Used for windows in thicknesses of 3/32" single strength (SS), 1/8" double strength (DS), and 1/4" heavy sheet plate

B. Safety--Used to overcome the hazards of sheet glass in large, exposed, or public areas

(NOTE: This is available tempered, laminated, and wired.)

C. Insulating--A unit of two or more sheets of glass separated by 1/8" to 1" air space, dehydrated, and sealed for windows

D. Pattern--Sheet glass with a pattern on both sides to diffuse light for privacy

E. Stained--Used for leaded glass for windows and decorative pieces

XIX. Uses of plastic in building construction

A. Laminates

1. Counter tops

2. Doors

3. Wall surfacing

INFORMATION SHEET

B. Coatings on wood or gypsum

C. Gutters and downspouts

D. Pipe

E. Trim and ornamental decor items

F. Film for vapor barriers

XX. Types of insulation materials and characteristics (Transparency 20)

(NOTE: Insulation is manufactured in a variety of forms and types to meet specific construction requirements.)

A. Blanket or batt--Available in 16" to 24" widths, 1" to 6" thicknesses, and 4' to 8' lengths of fiberglass, rock wool, or cellulose material with paper or aluminum foil backing

B. Loose fill--Available in bags; made from rock wool, fiberglass, cellulose, or polystyrene material

(NOTE: Rock wool and cellulose are treated to resist fire.)

C. Rigid--Made of fiberboard, fiberglass, polystyrene, or polyurethane that is available in sheet form with optional aluminum backing

(NOTE: Aluminum is applied when expecting extreme weather and conditions.)

D. Foam--Plastics that have blowing agents added to them which are deposited on the job site with a spray gun

XXI. Metal products and uses

A. Structural steel shapes--Used for girders, columns, and brick masonry lintels (Transparency 21)

B. Reinforcing bars--Used in structural steel open web beams and in reinforced concrete

C. Welded wire fabric--Mesh used for reinforcement of concrete

D. Gauge metals--Used for wall studs, window and door frames, roof flashings, duct work, roofing, and wall siding

E. Nonferrous metals--Aluminum, brass, and copper used for windows, thresholds, siding, electrical wiring, gutters, and flashing

XXII. Materials commonly used to cover a roof

A. Asphalt shingles

B. Rolled

INFORMATION SHEET

C. Wood shingles

D. Built-up

E. Clay tile

F. Metal

XXIII. Wood products used in construction (Transparency 22)

A. Dimension lumber

1. Rough framing members

(NOTE: Refer to *Architectural Graphic Standards* or *Wood Products Association Use Manual* for species or grade stress and loading.)

2. Finished

3. Ornamental

B. Plywood

(NOTE: For sizes, profiles, grades, and uses refer to *Plywood Products Association Use Manual.*)

C. Glue laminated timber

(NOTE: For sizes refer to American Institute of Timber Construction or manufacturer's product manual.)

XXIV. Nominal and actual sizes for dimension lumber

NOMINAL SIZES	ACTUAL SIZES
2 x 4	1 1/2 x 3 1/2
2 x 6	1 1/2 x 5 1/2
2 x 8	1 1/2 x 7 1/2
2 x 10	1 1/2 x 9 1/2
2 x 12	1 1/2 x 11 1/2

(NOTE: Actual size dimensions are used for drawing, and both actual and nominal are used for structural design calculations.)

XXV. Information which must be given to a truss manufacturer (Transparency 23)

(NOTE: Trusses are designed in accordance with the Truss Plate Institute design specifications.)

A. Span

(NOTE: Longer spans will require increasing of panel systems.)

INFORMATION SHEET

B. Roof pitch

(NOTE: This is controlled by the designer.)

C. Spacing of trusses

(NOTE: Wider spacing will place more loads on each truss and will require larger chords.)

D. Roof load

(NOTE: Refer to load charts for the area.)

XXVI. Structural design terms and definitions (Transparencies 24 and 25)

A. Dead load--The weight of the materials used to construct the building

B. Live load--The weight or force exerted by items that are not a part of the building itself

(NOTE: Wind, snow, furniture, and people live loads are commonly assigned by a local code according to the building occupancy and use.)

C. Vertical shear (V)--A downward force at or near the support that tends to cut or shear the beam off at the supports

D. Horizontal shear (H)--Force which causes a beam to fail by pulling the fibers apart parallel to the beam

E. Moment (M)--The force that tends to cause the point of load on a beam to rotate about a column connection or support

(NOTE: Units are in foot-pounds.)

F. Bending (f)--A force due to moments in the beam which tend to bend the beam past failure

(NOTE: I/360 maximum bending or deflection is common.)

G. Reaction (R)--The force needed to resist moments to maintain equilibrium

(NOTE: Units are in foot-pounds.)

H. Fiber stress--A property of a material measuring its maximum allowable fiber strength at the farthest point from the neutral axis

(NOTE: Wood fiber stress can be found in *Architectural Graphic Standards* in tables for each species in PSI.)

I. Deflection (Δ)--Permissible bending according to local code depending upon beam's length of span, load, and material

(NOTE: If deflection for a beam is greater than $\frac{\text{l in inches}}{360}$, the beam needs to be recalculated.)

INFORMATION SHEET

J. Section modulus (S)--Used to determine the rectangular cross-section of a beam that will resist moments

K. Modulus of inertia (I)--Used to determine the rectangular cross-section of a beam that will determine the allowable deflection in a beam

(NOTE: Use only actual dimensions.)

L. Modulus of elasticity (E)--The rate of deformation of a material as stress is applied to it

(NOTE: Units are in pounds per square inch.)

XXVII. Structural design formulas (Transparencies 24 and 25)

(NOTE: For the following formulas w = square feet of floor surface per 1 linear foot along beam multiplied by the dead load in pounds; l = length of beam in feet; b = width of beam; d = depth of beam; E = modulus; and f = bending [fiber stress of lumber in PSI].)

A. Vertical shear--$V = \frac{wl}{2}$

B. Horizontal shear--$H = \frac{3V}{2bd}$

C. Maximum moment--$M = \frac{wl^2}{8}$

(NOTE: If answer is needed in inch pounds, multiply by 12.)

D. Deflection--$\Delta = \frac{5wl^3}{348EI}$

E. Section modulus--$S = \frac{bd^2}{6}$

(NOTE: Calculations may be for nominal or actual size dimensions.)

F. Minimum allowable section modulus--$S = \frac{M}{f}$

G. Modulus of inertia--$I = \frac{bd^3}{12}$

(NOTE: Use actual size dimensions for b and d. This formula is used to calculate wood beams; steel beam data can be found in tables.)

INFORMATION SHEET

XXVIII. Abbreviations

Anchor bolt--AB
Beam--BM
Blocking--BLKG
Bottom--BOTT
Ceiling--CL
Center to center--C to C
Floor--FL
Frame--FR
Header--HDR
Laminated--LAM
Lumber--LBR
Nominal--NOM
On center--OC
Opening--OPG
Partition--PTN
Plates--PLTS
Platform--PLATF
Plywood--PLY
Riser--R
Roof--RF
Roofing--RFG
Rough--RGH
Sheathing--SHTG
Siding--SDG
Structural--STR
Thickness--THK
Tongue and groove--T & G
Window--WDW

Platform Framing

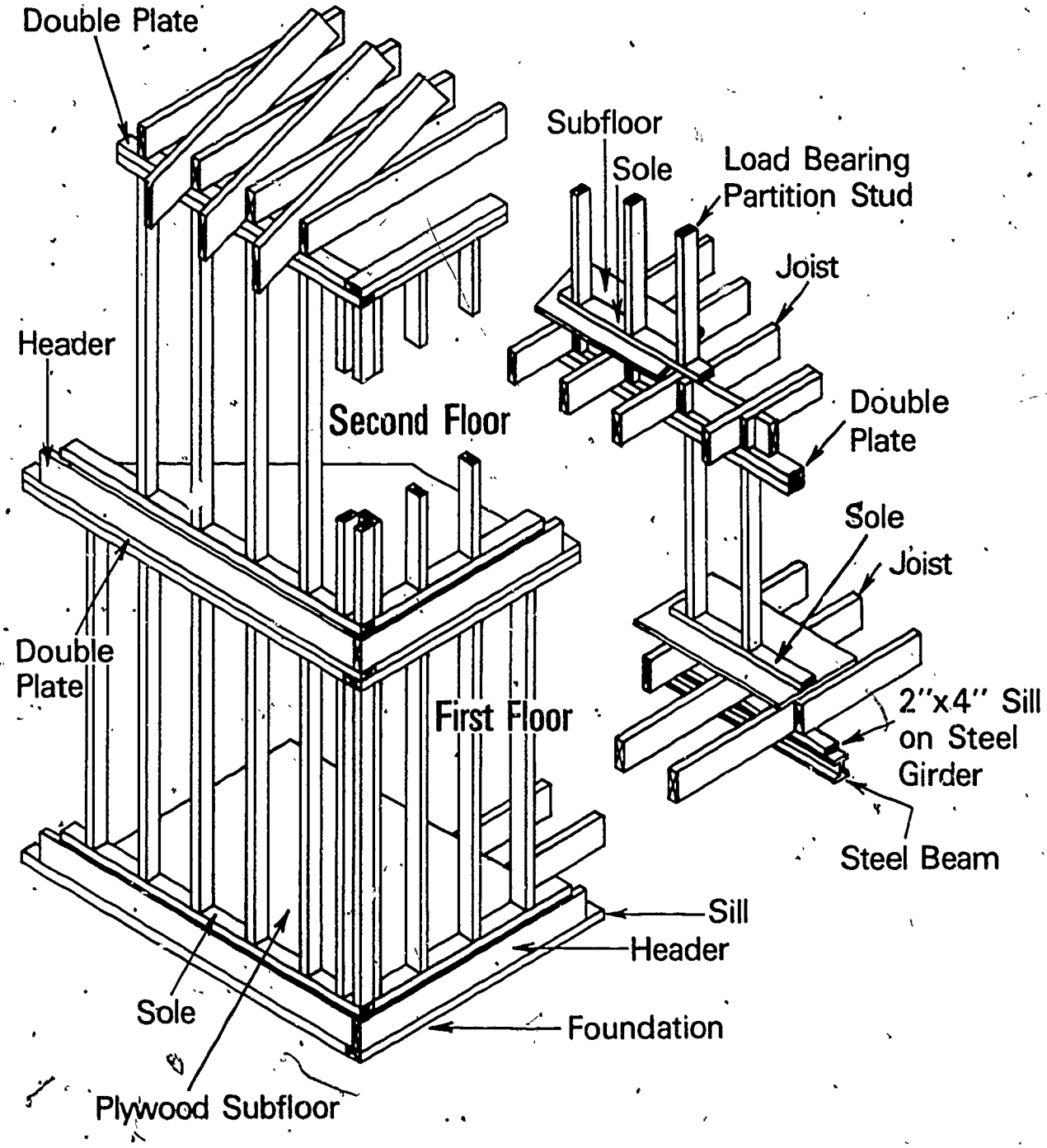

Balloon Framing

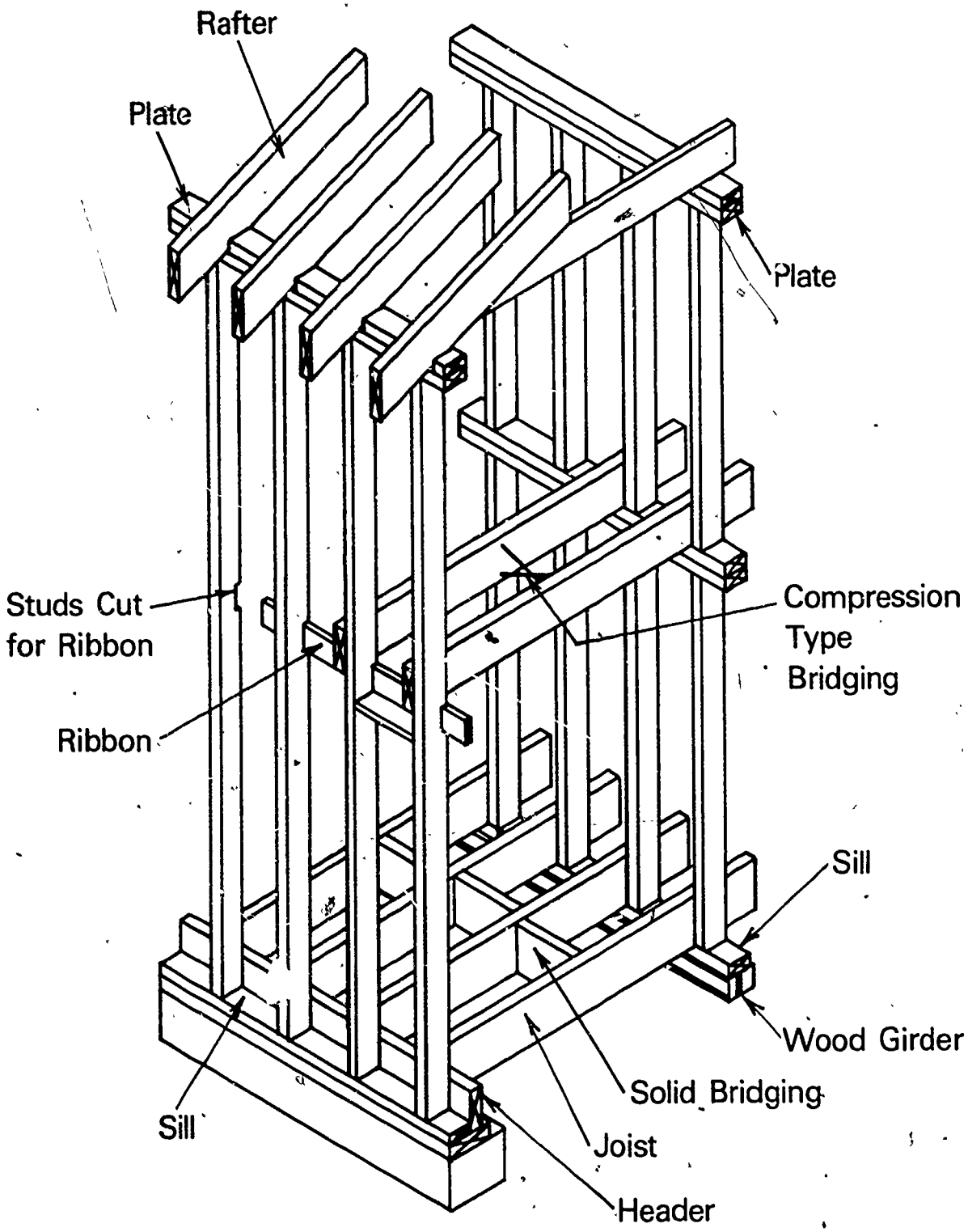

Types of Sill Construction

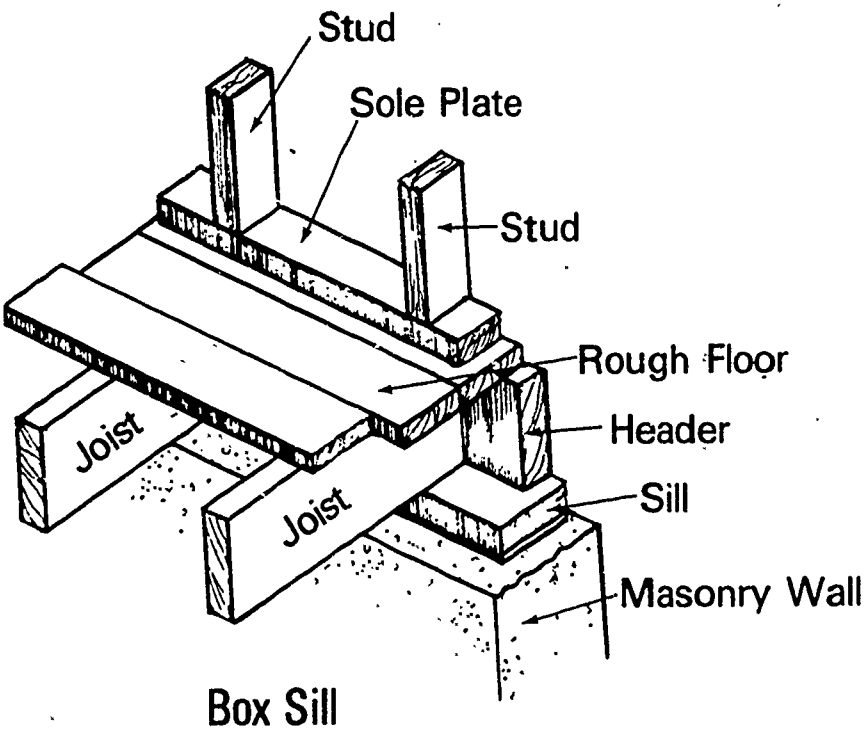

Box Sill

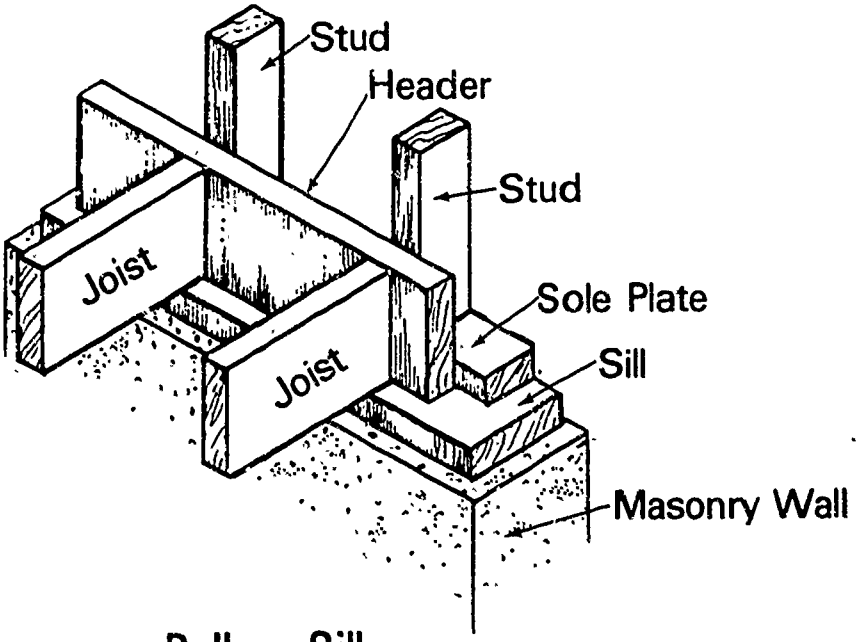

Balloon Sill

Types of Wood Floor Joist Framings

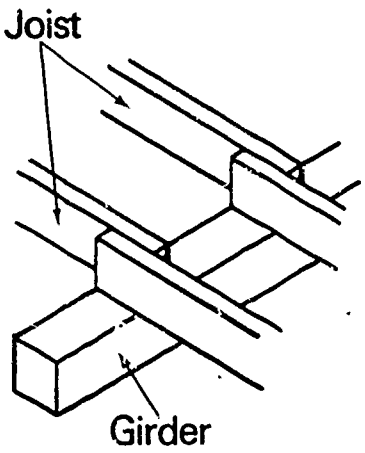

Wood Beam

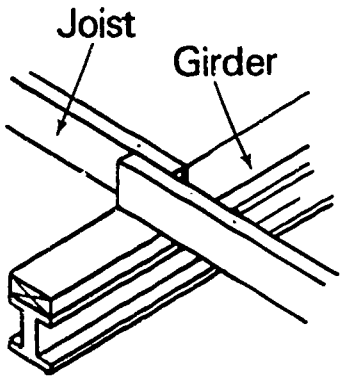

Steel Beam

Lapped

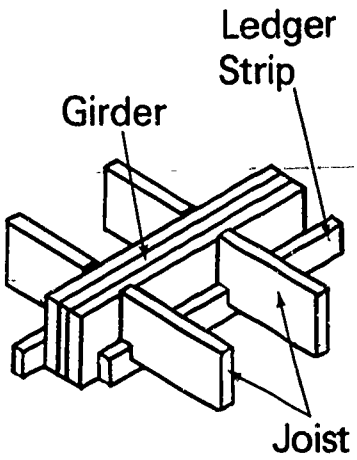

Notched

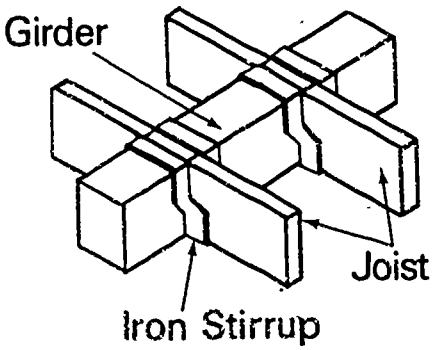

Hung with Stirrups

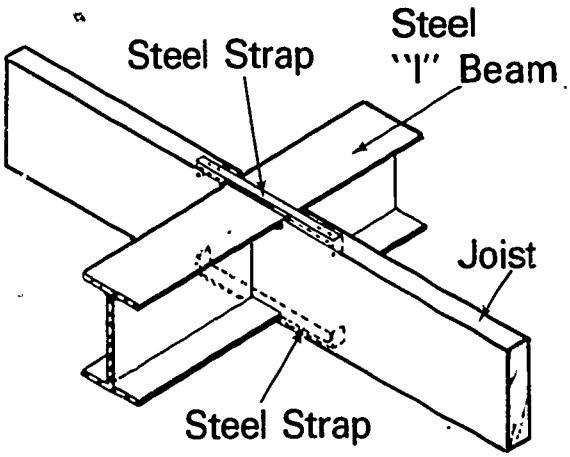

Framed

Bridging

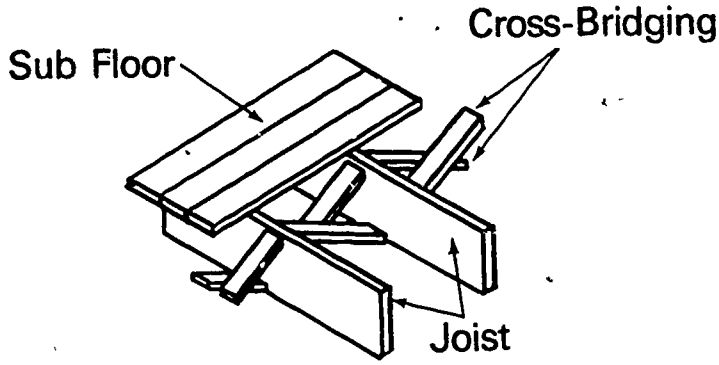

Wood

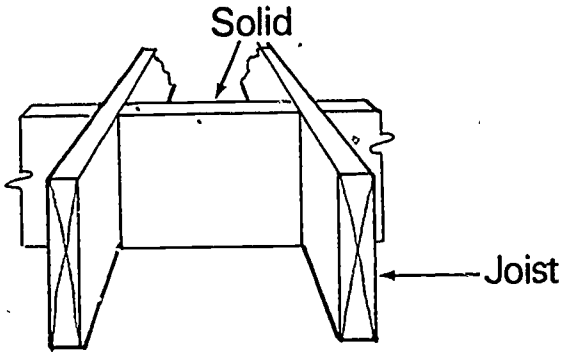

Solid Bridging

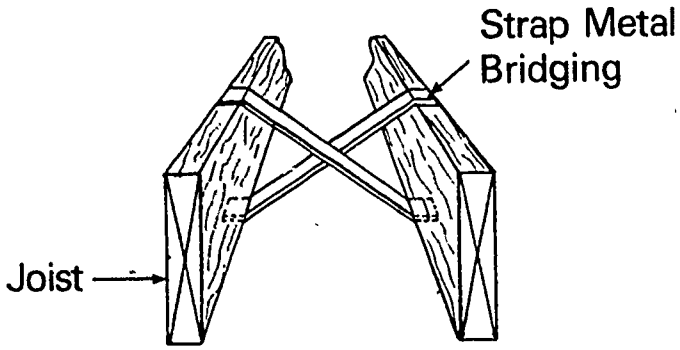

Metal Bridging

Wall Framing Members

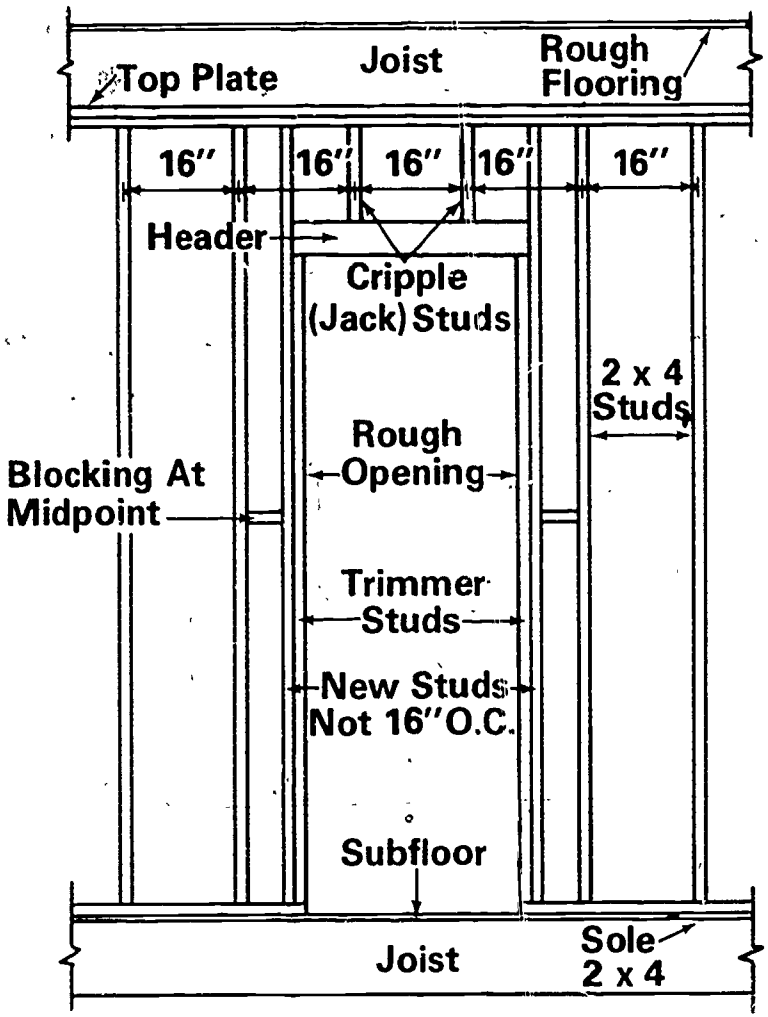

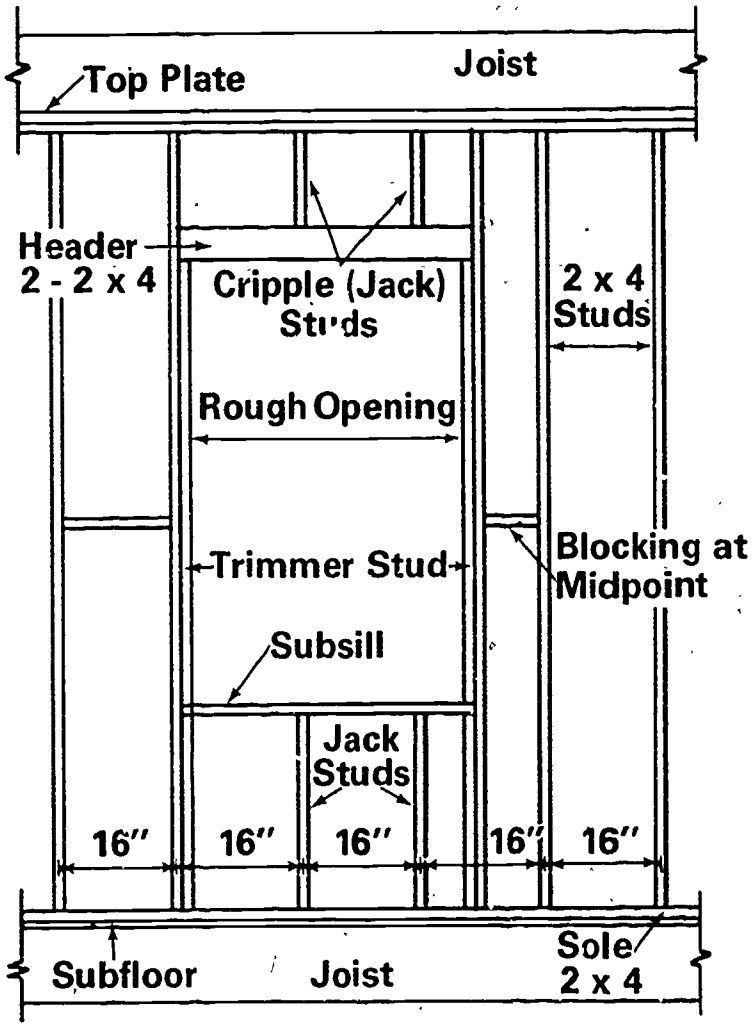

Frame Bracing

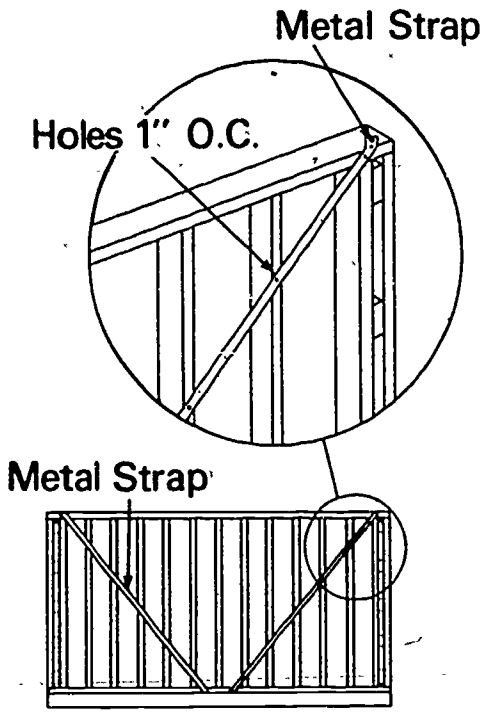

Strap

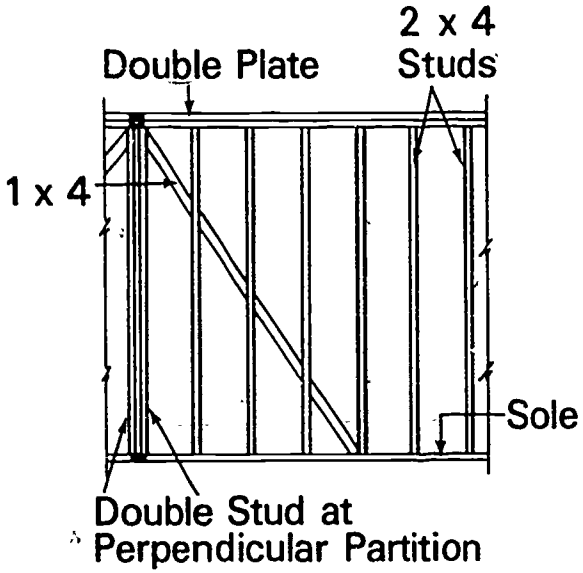

1 x 4 Let-in
Wood

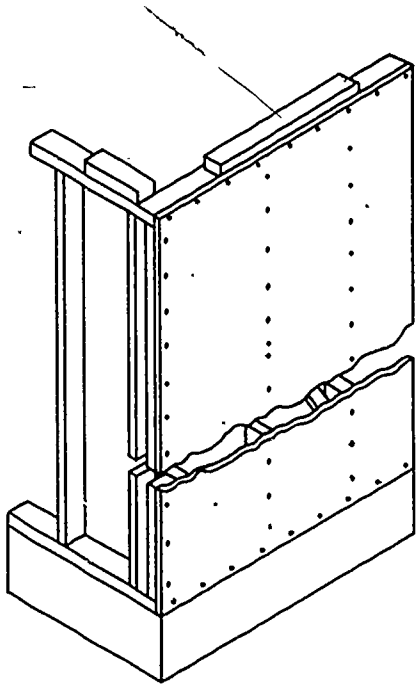

Plywood

Basic Types of Roofs

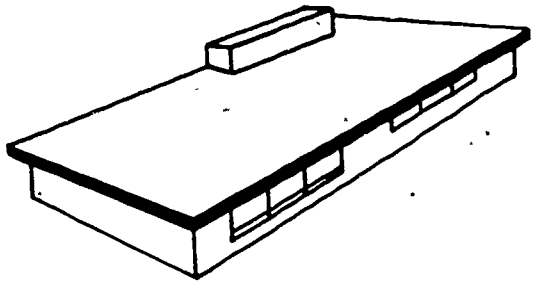

Flat

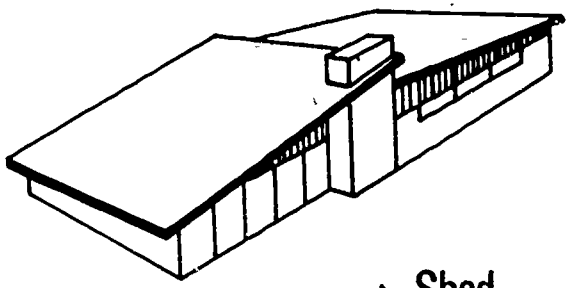

Shed

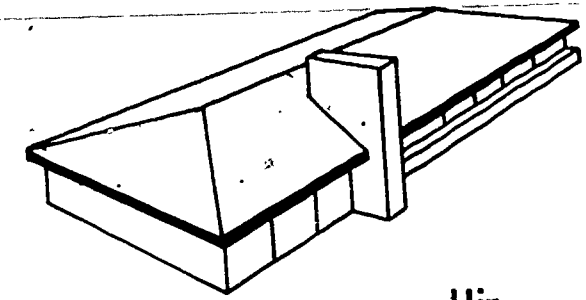

Hip

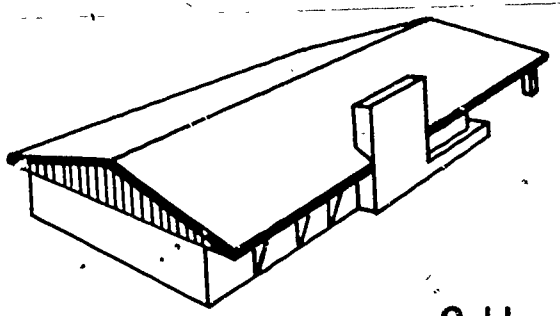

Gable

Roof Framing Members

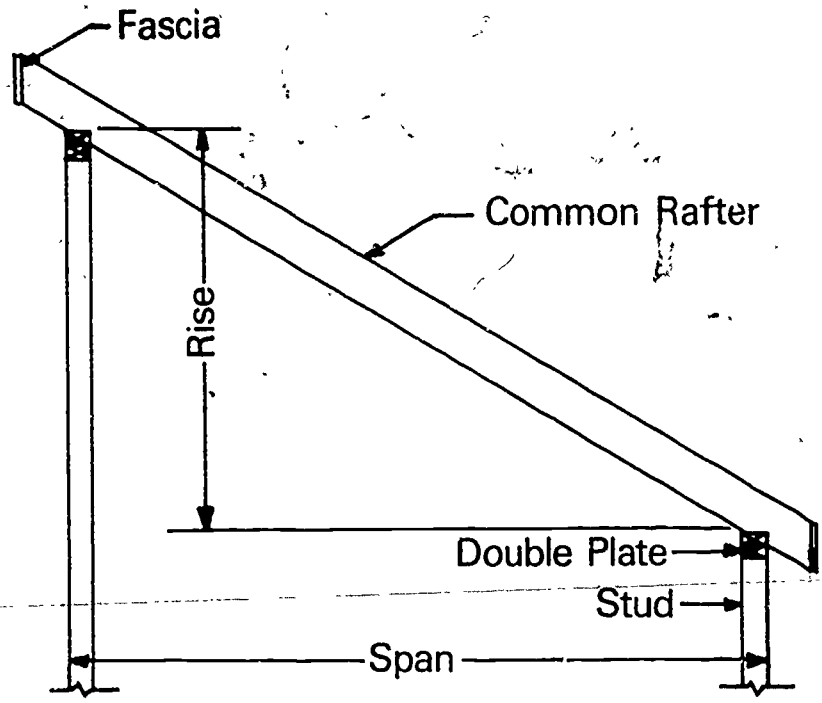

Shed

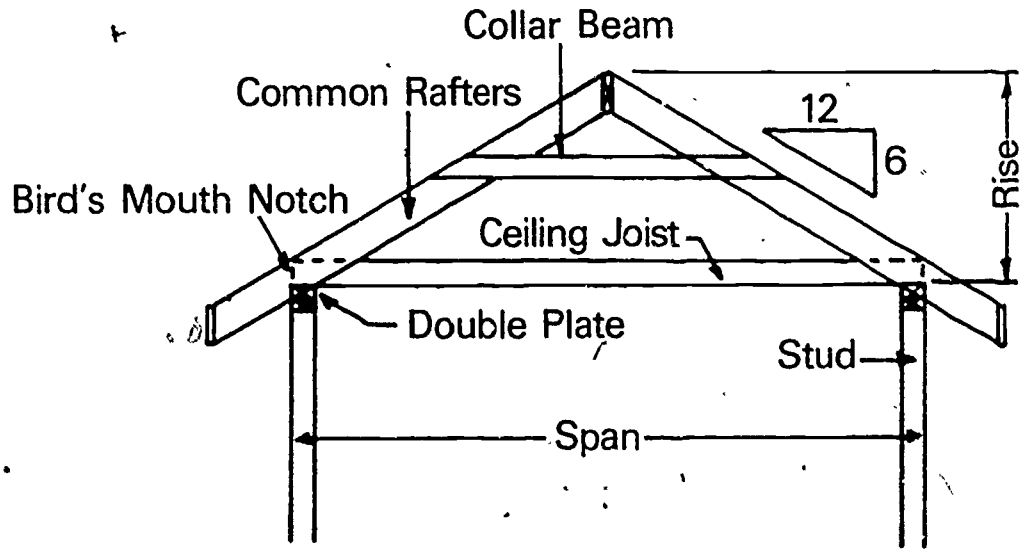

Gable

Roof Framing Members
(Continued)

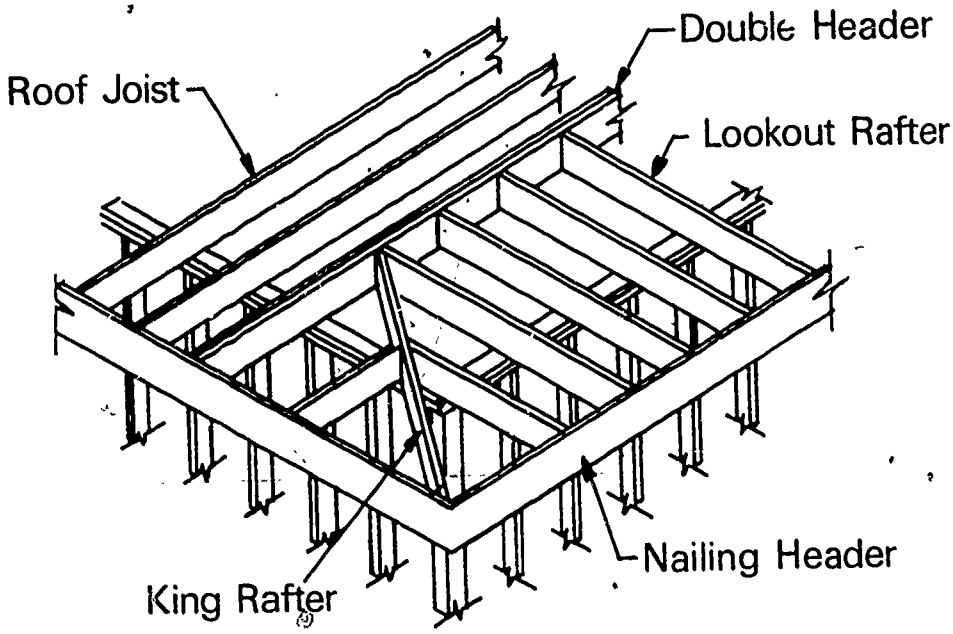

Flat

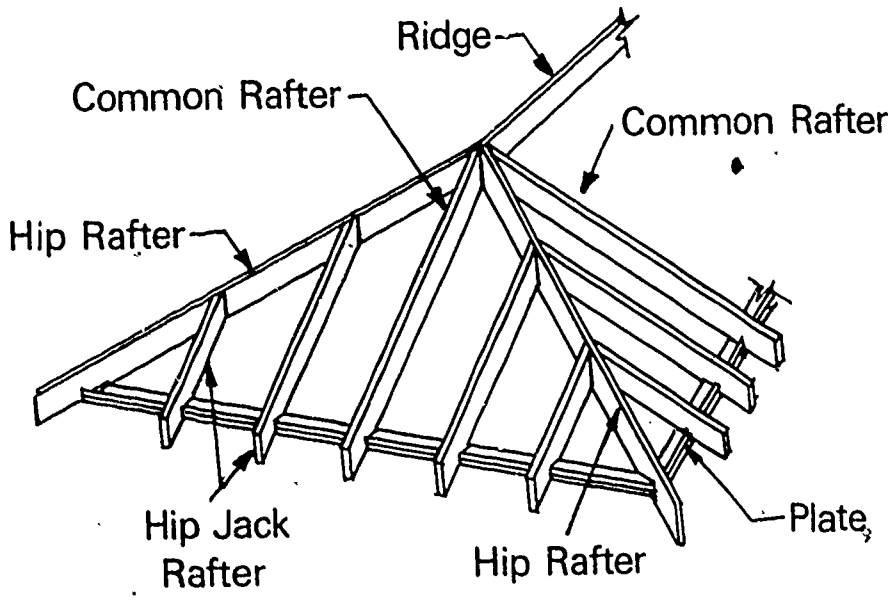

Hip

Types of Cornices

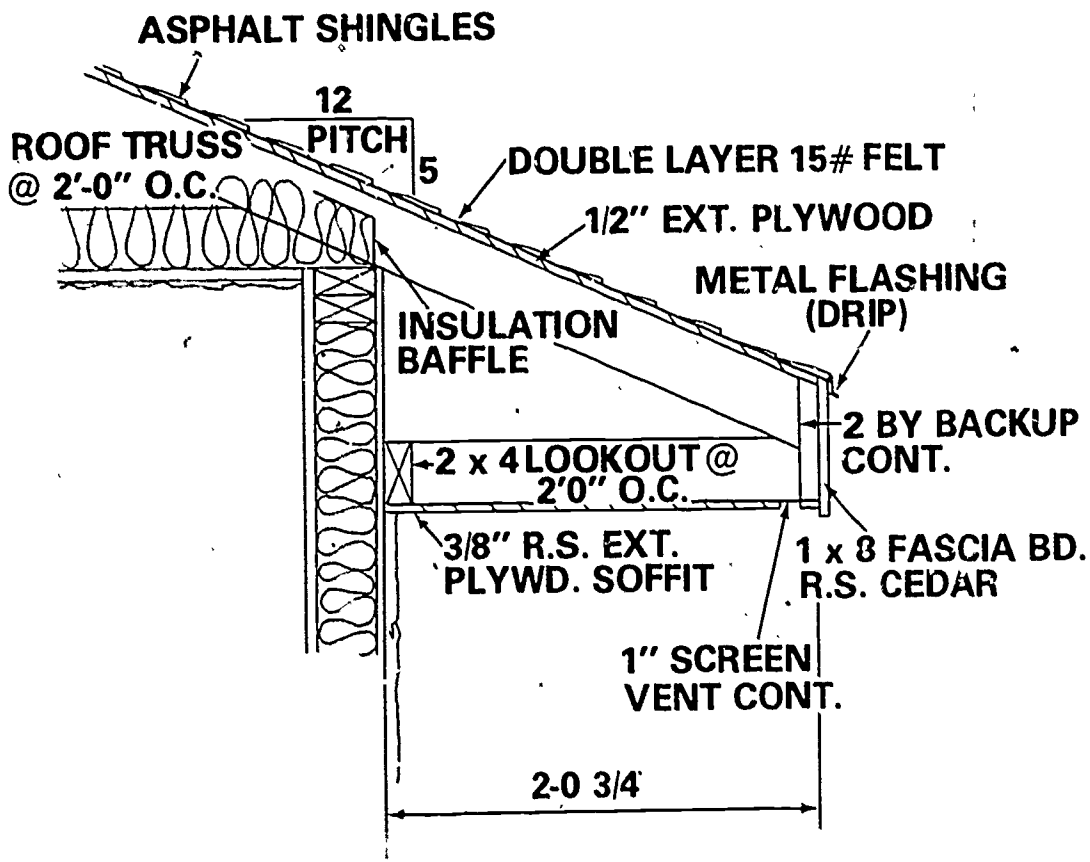

Wide Box (Plumb Cut)

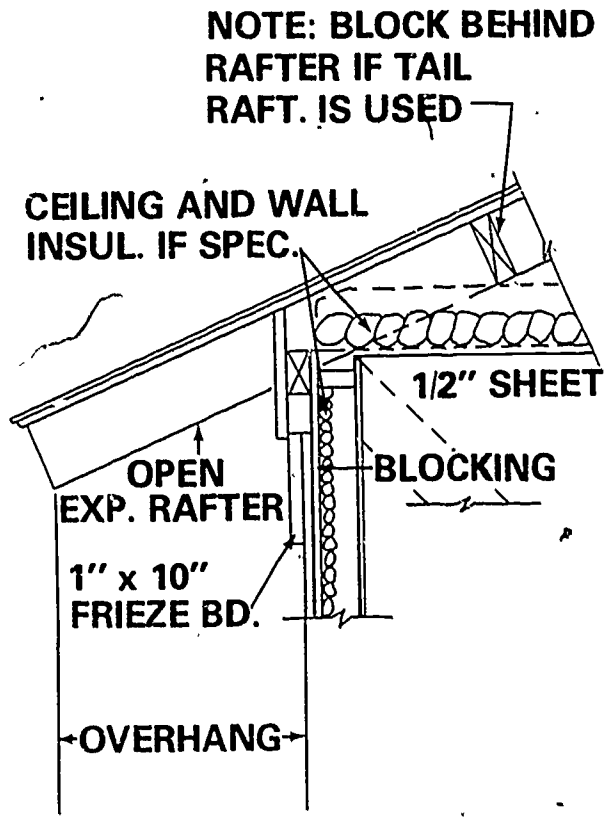

Open

Types of Cornices

(Continued)

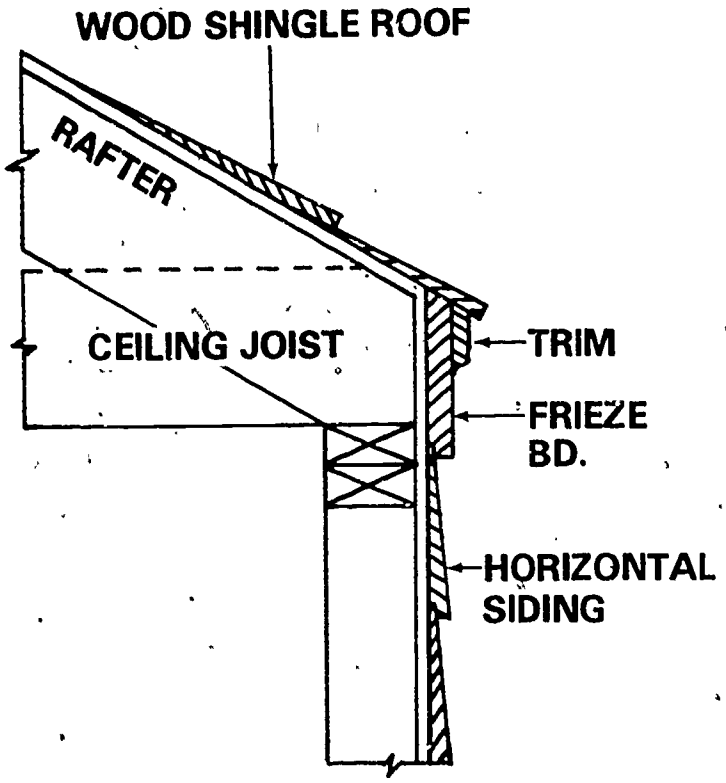

Close Box

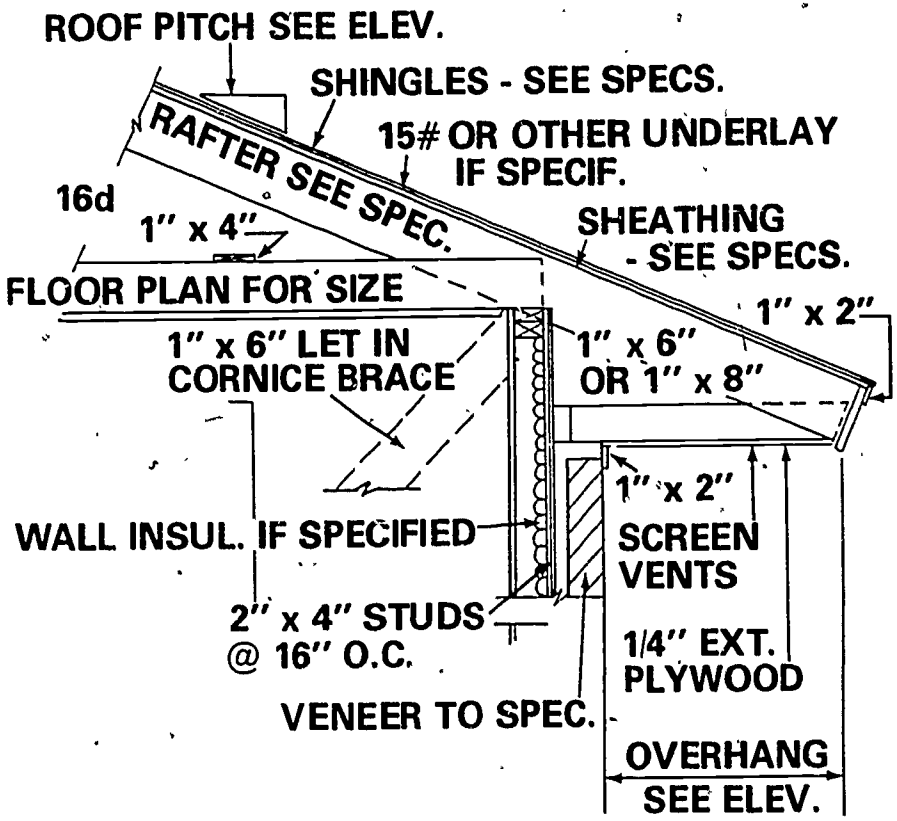

Wide Box with Lookouts
(Square Cut)

Types of Cornices

(Continued)

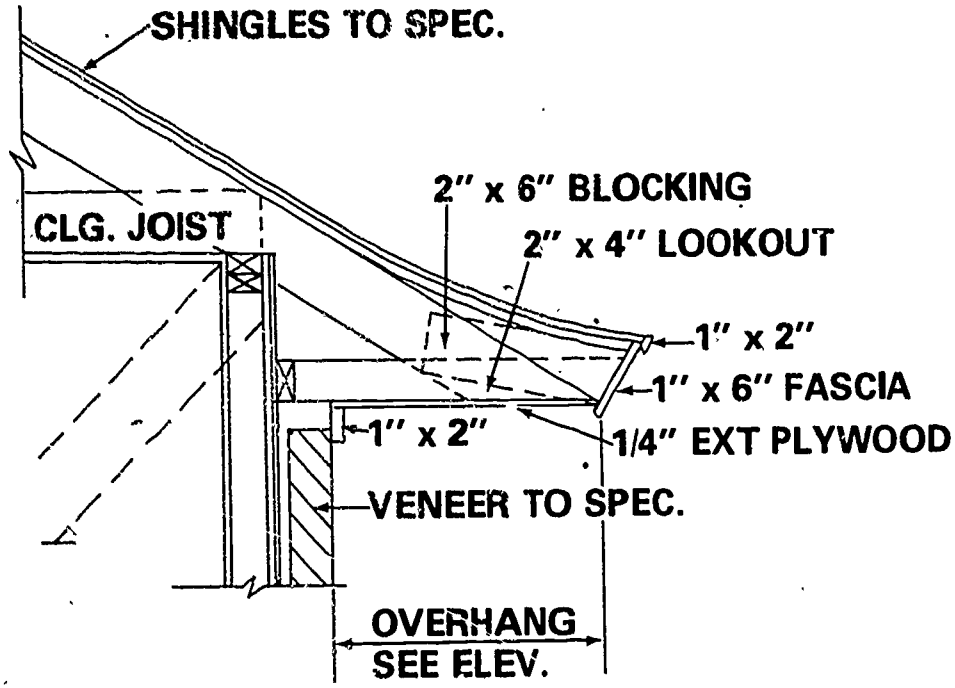

Swept Eave

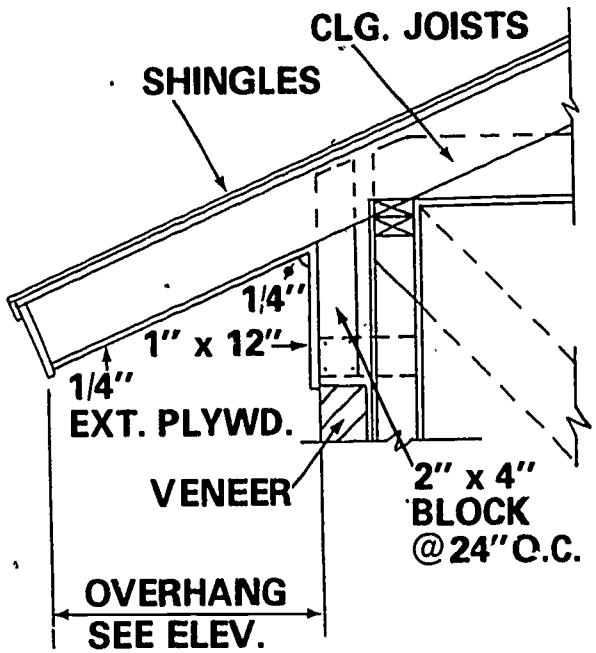

Wide Box without Lookouts

Types of Beams

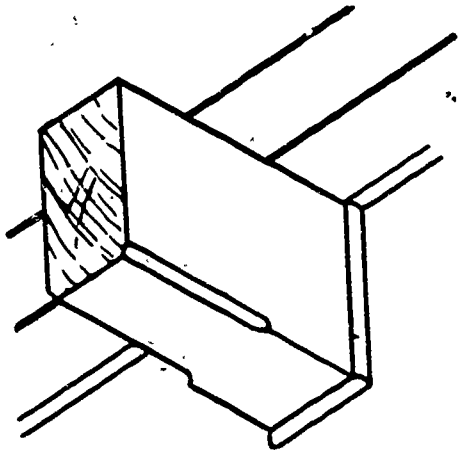

Solid Beam

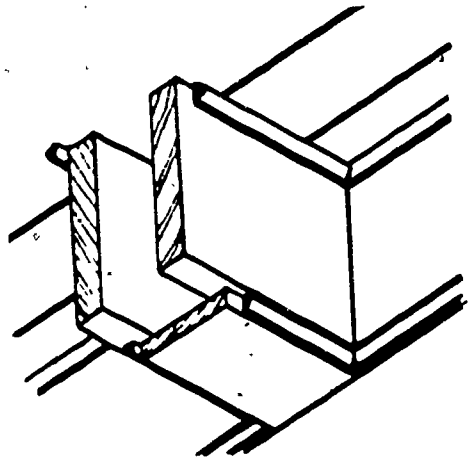

Spaced Beam

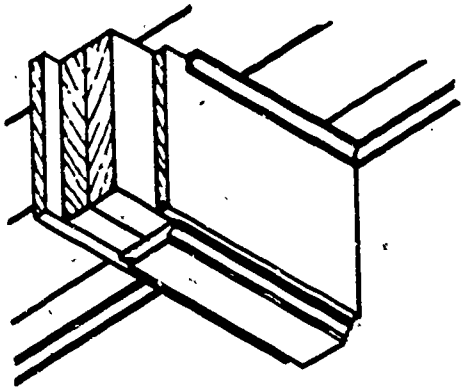

Cased Beam

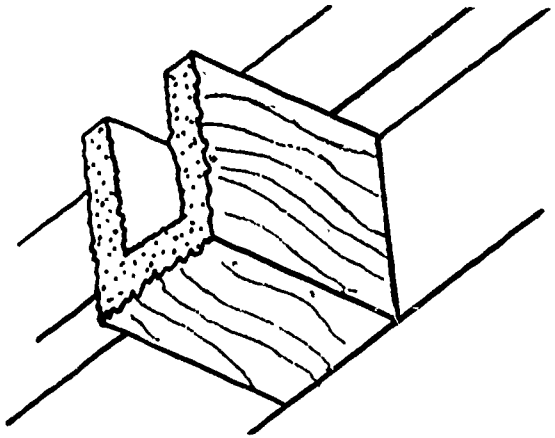

False Beam (Decorative)

Gypsum Wallboard

Annular Ring Nail

Drywall Screw

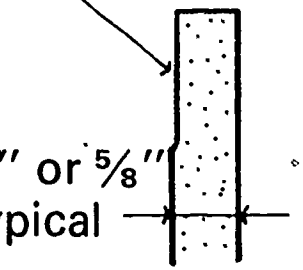

Gypsum Board Section
(Note: This is commonly called drywall.)

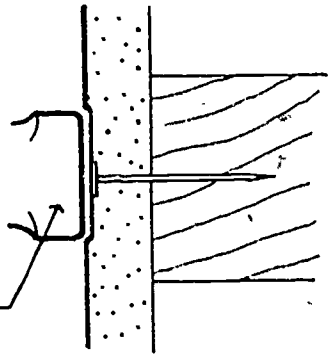

Dimpled Board @ Nail

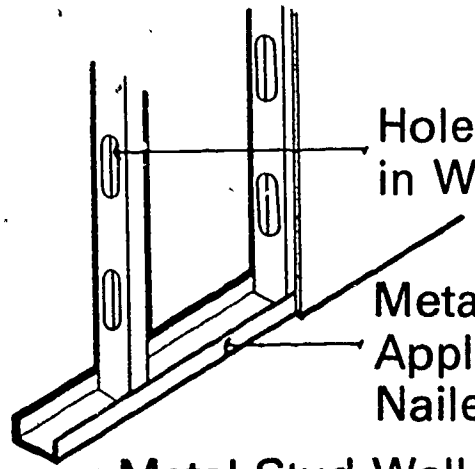

Metal Stud Wall

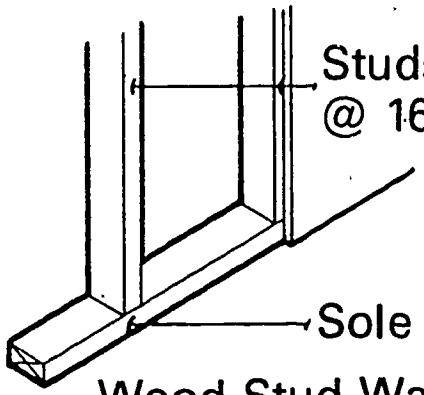

Wood Stud Wall

Concrete Materials and Testing

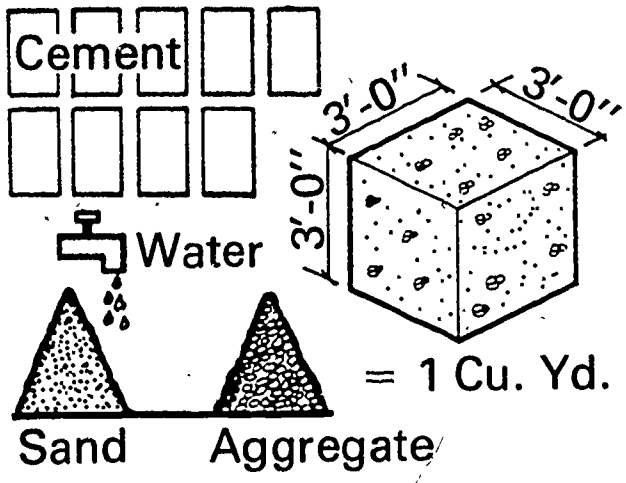

Concrete Materials

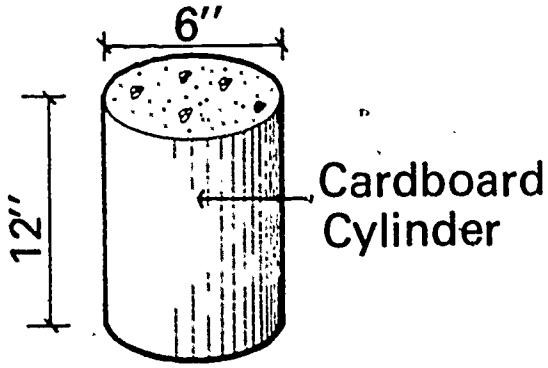

Compression
Core Test

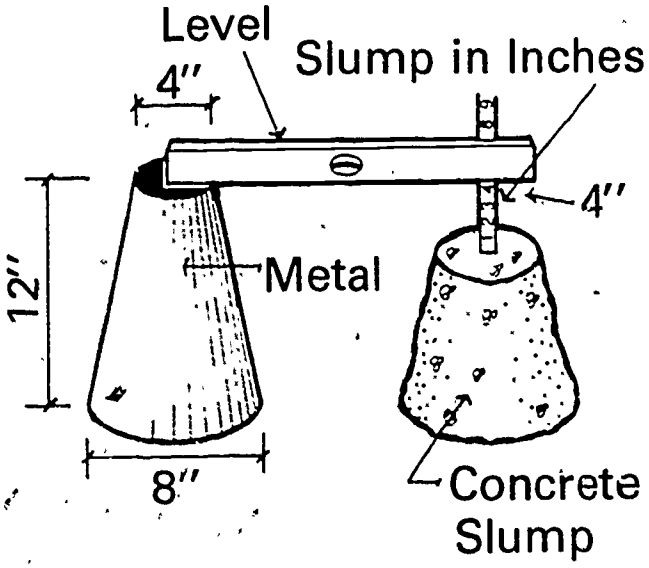

Water-Temperature Effect On Concrete

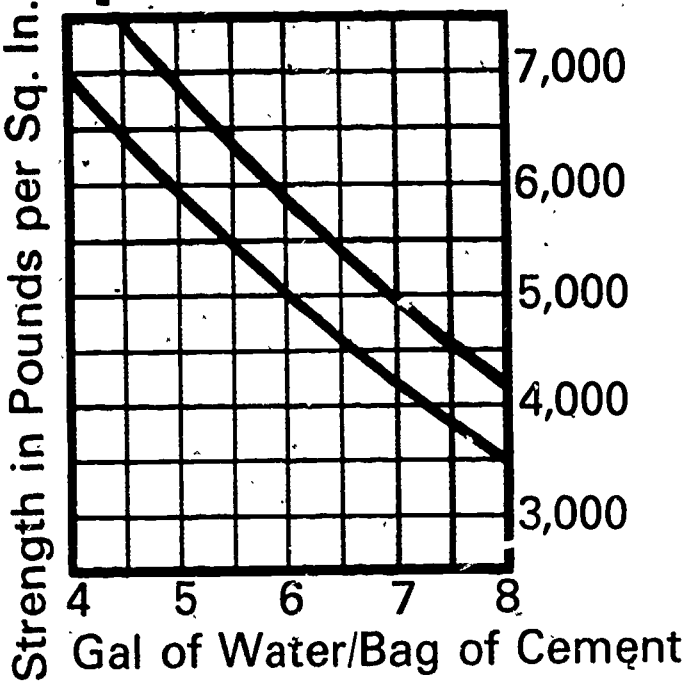

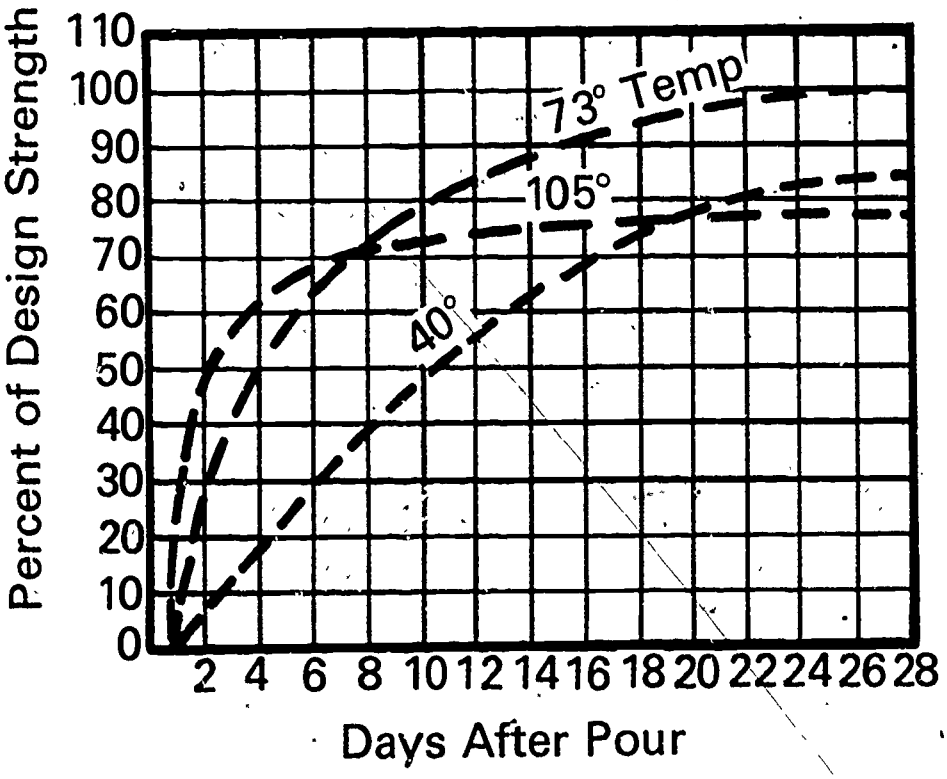

Masonry Products

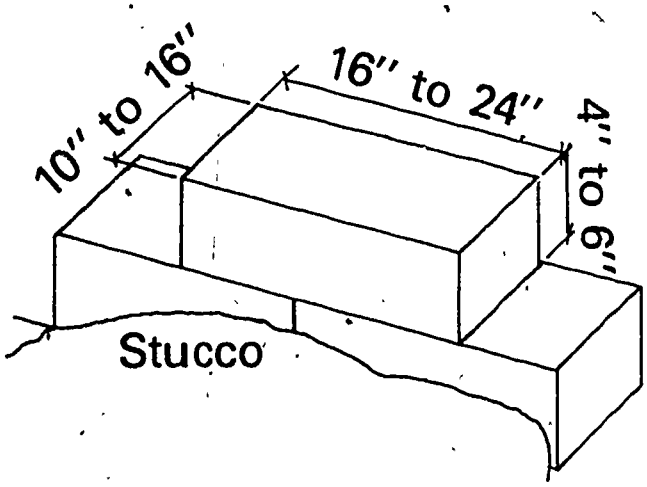

Adobe Brick

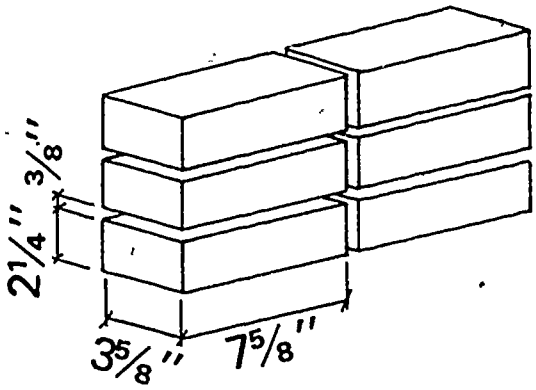

Brick

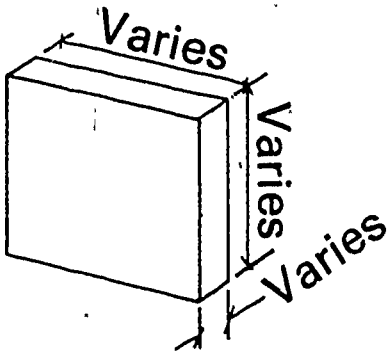

Ceramic, Mosaic, Quarry Tile

See Manufacturer for Size

Nominal Modular Sizes of Brick

Unit Designation	Dimensions		
	Thickness	Height	Length
Modular	4"	2 2/3"	8"
Economy	4"	4"	8"
Double	4"	5 1/3"	8"
Roman	4"	2"	12"
Norman	4"	2 2/3"	12"
Utility	4"	4"	12"
Triple	4"	5 1/3"	12"
SCR Brick	6"	2 2/3"	12"
6" Jumbo	6"	4"	12"
8" Jumbo	8"	4"	12"

Masonry Products
(Continued)

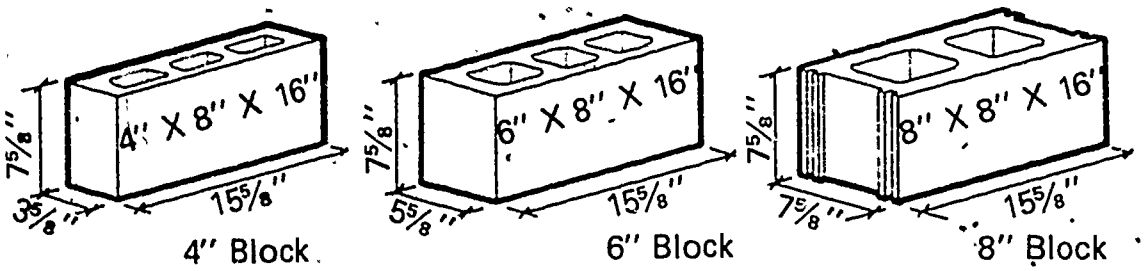

4" Block 6" Block 8" Block

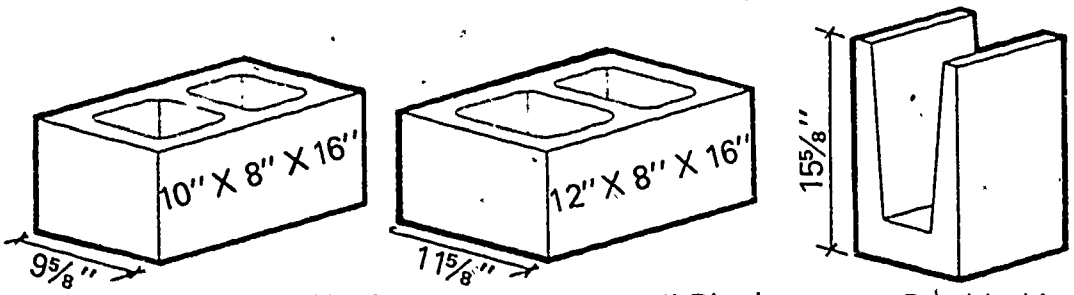

10" Block 12" Block Double Lintel

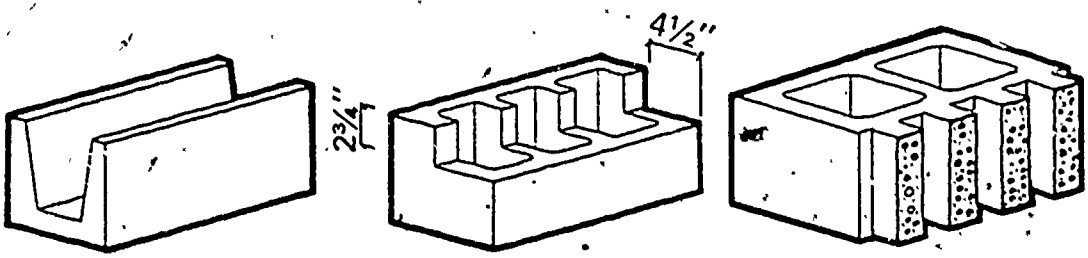

Lintel Block Header Break Off Block

Standard Concrete Blocks

Insulation R Values

Loose Insulation	R Value
Fiberglass	2.2/in.
Rockwool	2.9/in.
Cellulose	3.75/in.
Polystyrene	5/in.
Urethane Foam	6.2/in.

Batts of Insulation	R Value
6″ Fiberglass	19
5-5½″ Rockwool	19

R Value -- Resistance to Heat Transfer

Higher R Values Mean Greater Insulating Power.

Structural Steel Shapes

Descriptive Name	Shape	Identifying Symbol	Typical Designation Height Wt/Ft in Lb.	Nominal Size Height Width
Wide Flange Shapes	I	W	W21 X 142	21 X 13
American Standard Beams	I	S	S8 X 23	8 X 4
American Standard Channels	[	C	C6 X 13	6 X 2
Angles— Unequal Legs	L	L	L8 X 6 X ½"	8 X 6

Standard Lumber Sizes

	thickness in.	width in.		thickness in.	width in.
board lumber	1"	2" or more	beam & stringers	5" and thicker	more than 2" greater than thickness
light framing	2" to 4"	2" to 4"	posts & timbers	5" x 5" and larger	not more than 2" greater than thickness
studs	2" to 4"	2" to 4" 10' and shorter	decking	2" to 4"	4" to 12" wide
structural light framing	2" to 4"	2" to 4"	siding	thickness expressed by dimension of butt edge	
structural joists & planks	2" to 4"	6" and wider	mouldings	size at thickest and widest points	
Lengths of lumber generally are 6 feet and longer in multiples of 2'					

standard lumber sizes/nominal, dressed, based on WWPA rules

Product	Description	Nominal Size		Dressed Dimensions	
				Thicknesses and Widths In.	
		Thickness In.	Width In.	Surfaced Dry	Surfaced Unseasoned
DIMENSION	S4S . . . . . (Surfaced 4 Sides)	2	2	1-1/2	1-9/16
		3	3	2-1/2	2-9/16
		4	4	3-1/2	3-9/16
			6	5-1/2	5-5/8
			8	7-1/4	7-1/2
			10	9-1/4	9-1/2
			12	11-1/4	11-1/2
			Over 12	Off 3/4	Off 1/2

	Nominal Size	Width Overall	Width Face
SHIPLAP	1 x 6	5 1/2	5 1/8
	1 x 8	7 1/4	6 7/8
	1 x 10	9 1/4	8 7/8
	1 x 12	11 1/4	10 7/8
TONGUE AND GROOVE	1 x 4	3 3/8	3 1/8
	1 x 6	5 3/8	5 1/8
	1 x 8	7 1/8	6 7/8
	1 x 10	9 1/8	8 7/8
	1 x 12	11 1/8	10 7/8
S4S	1 x 4	3 1/2	3 1/2
	1 x 6	5 1/2	5 1/2
	1 x 8	7 1/4	7 1/4
	1 x 10	9 1/4	9 1/4
	1 x 12	11 1/4	11 1/4

	Nominal Size	Width Overall	Width Face
PANELING PATTERNS	1 x 6	5 7/16	5 1/16
	1 x 8	7 1/8	6 3/4
	1 x 10	9 1/8	8 3/4
	1 x 12	11 1/8	10 3/4
BEVEL SIDING	1 x 4	3 1/2	3 1/2
	1 x 6	5 1/2	5 1/2
	1 x 8	7 1/4	7 1/4
	1 x 10	9 1/4	9 1/4
	1 x 12	11 1/4	11 1/4

Trusses

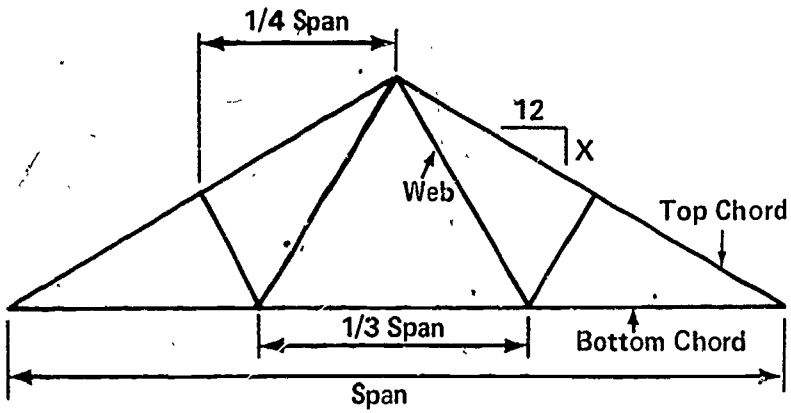

4 Panel

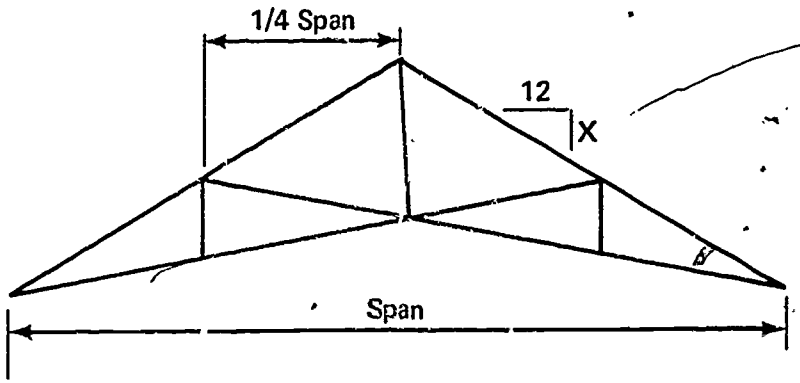

4 Panel

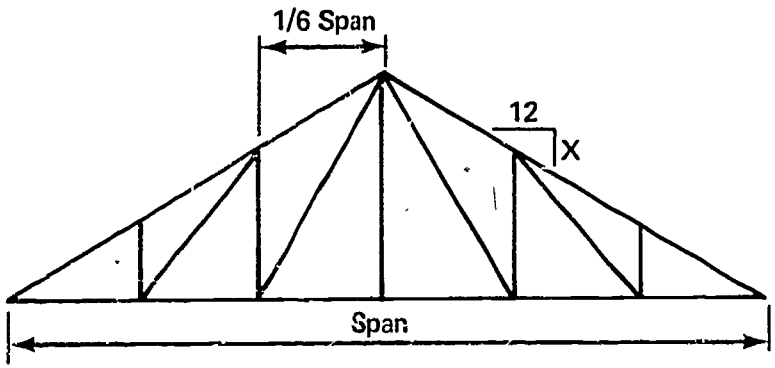

6 Panel

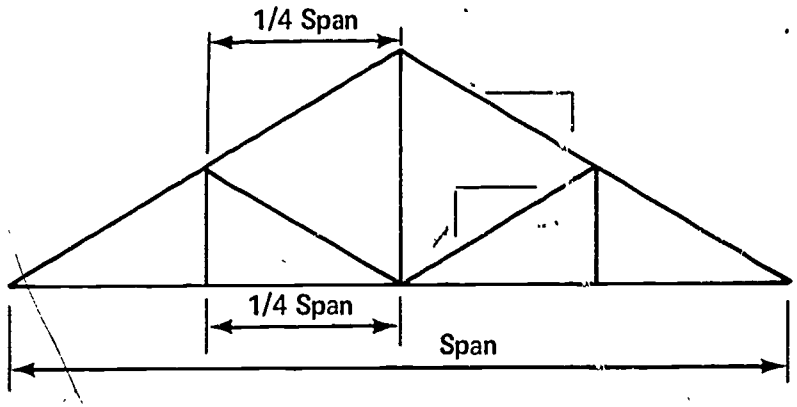

4 Panel

Structural Design Terms

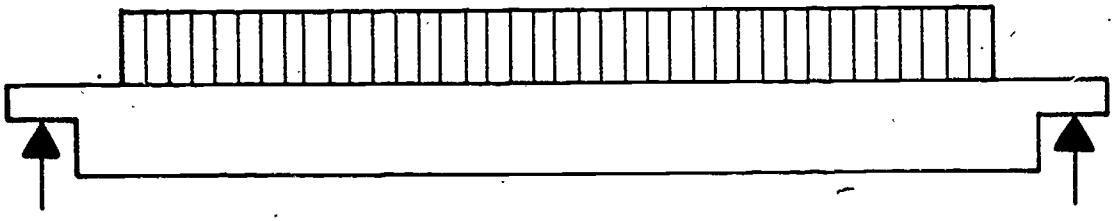

Vertical Shear

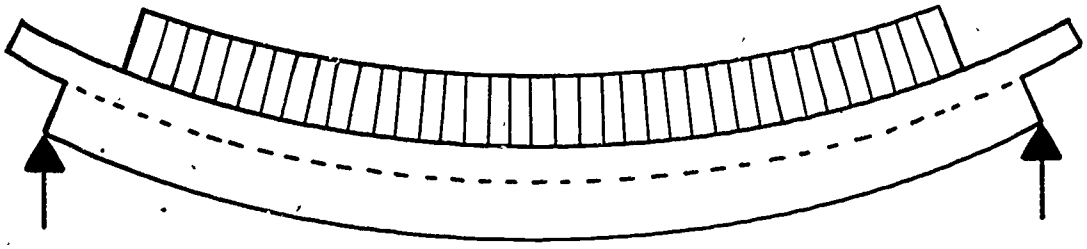

Horizontal Shear

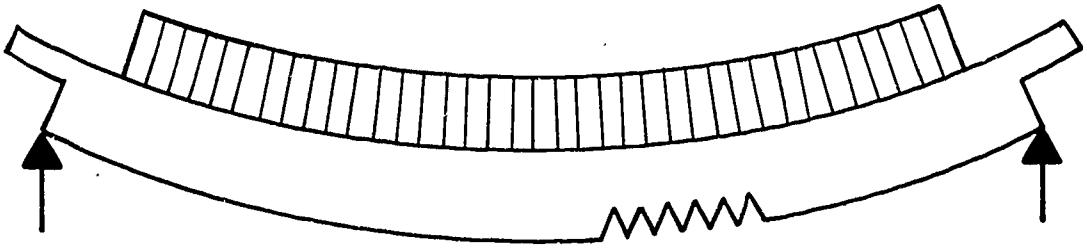

Bending

Structural Design Terms
(Continued)

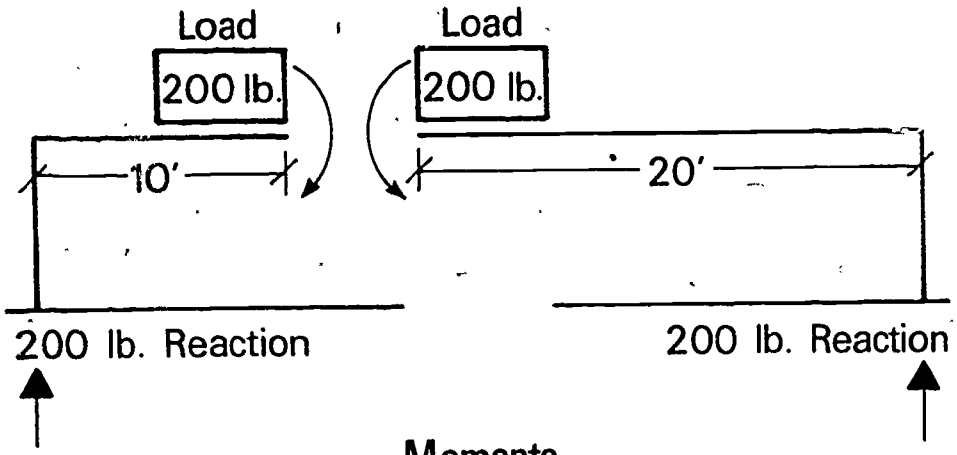

Moments

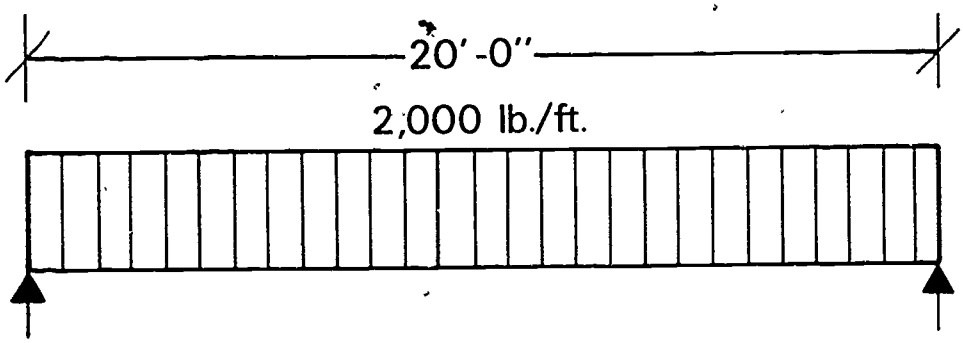

Uniformly Distributed Load

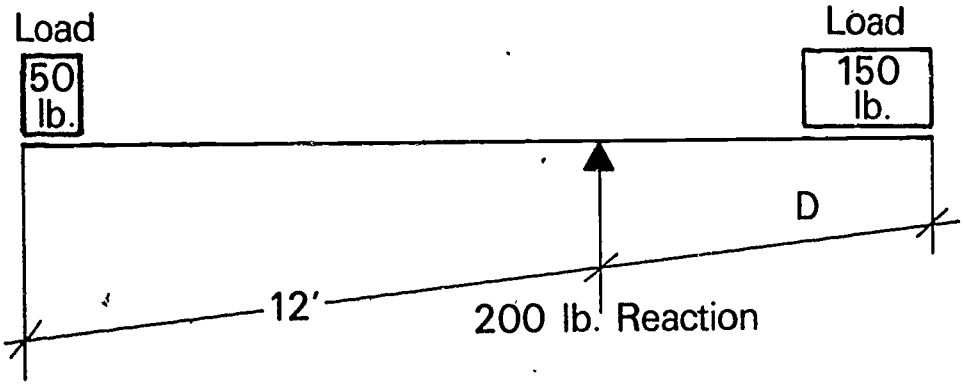

Equilibrium

STRUCTURAL SYSTEMS AND BUILDING MATERIALS
UNIT V

ASSIGNMENT SHEET #1--DETERMINE SIZES OF WOOD FLOOR JOISTS AND ROOF RAFTERS

Introduction: Floor joists and roof rafters are simple beams typically placed 12", 16", or 24" on center. Instead of calculating each joist like a beam, a table has been established to determine the maximum span. The rafter and joist tables found in *Architectural Graphic Standards* require only three factors to determine the span--live load, deflection, and bending.

Example A: Wood floor joist sizes

Given: 30' wide x 45' long residence with one girder in floor, (Figure 1) 40 lb. live load, and Southern pine #2 floor joist 16" O.C.

(NOTE: Check live load tables for live load in your area. Allowable unit stress tables for Southern pine #2 show bending (f) = 1200 PSI and maximum deflection (Δ) = 1,760,000 PSI.)

FIGURE 1

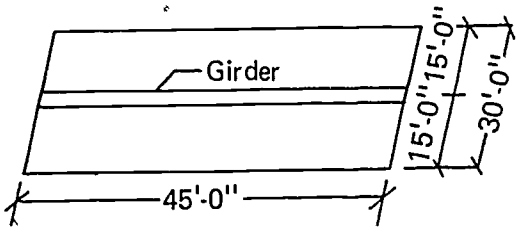

1. Select rafters and joists table for 40 lb. live load

2. Find the joist size for 15'-0" span according to bending or deflection

   a. Bending--With maximum bending to 1200 PSI, 2 x 10 joist of 16" O.C. can span 17'-5", exceeding 15'-0"

   b. Deflection--With deflection to 1,600,000 PSI, 2 x 10 joist of 16" O.C. can span 16'-3", exceeding 15'-0"

   (NOTE: Local code may limit deflection values; local code may use bending values.)

Example B: Roof rafter sizes

(NOTE: The tables calculate rafter span in horizontal distance rather than the actual length of roof.)

Given: 30' wide x 45' long residence with 4:12 pitch and wood shingles, Southern pine #2 16" O.C., and 20 lb. live load

(NOTE: See local codes.)

ASSIGNMENT SHEET #1

1. Select rafters and roof joists table for 20 lb. live load and group 1 roof coverings

2. Find the rafter size for 1/2 span of horizontal distance using Southern pine #2

3. In column f = 1200 PSI, a 2 x 8, 16" O.C. rafter will span 18'-3" horizontal distance, exceeding 15'-0".

Problems:

Directions: Find the joist sizes as shown in Example A.

A. 32' wide x 40' long residence, 50 lb. live load, Douglas Fir construction grade, and code limits deflection as Δ = 1,600,000 PSI

(NOTE: If joist depth is too much, use more than one girder in floor.)

B. 26' wide x 45' long residence, 60 lb. live load, and Douglas Fir construction grade

C. As assigned by instructor

(NOTE: This may be for your design project.)

Directions: Find the rafter sizes as shown in Example B.

D. 32' wide x 40' long residence with 4:12 pitch and asphalt shingles roof, 30 lb. live load, and Douglas Fir construction grade with rafters 16" O.C.

E. 26' wide x 45' long residence with 4:12 pitch and tile roof, 30 lb. live load, and Douglas Fir construction grade with rafters 16" O.C.

F. As assigned by instructor

(NOTE: This may be for your design project.)

STRUCTURAL SYSTEMS AND BUILDING MATERIALS
UNIT V

ASSIGNMENT SHEET #2--DETERMINE SIZES OF WOOD GIRDERS

Introduction: All weight of the floor system, including the live and dead loads, are transmitted either to the foundation wall or to horizontal supports known as girders or beams. The steps commonly used to design wood girders are to determine maximum shear and moment on beam, choose species of lumber, calculate minimum allowable section modulus, and beam deflection. A beam with light load and long span should be checked for deflection. A beam with short span or a large load located near the supports should be checked for horizontal shear. It is a common practice to design a beam or girder with depth the same as the floor joist depth. This may require shorter spans and several piers. Refer to Objective 27 in the information sheet for formulas and *Architectural Graphic Standards* for tables for the following example and problems.

Example:

Given: 28' x 30' residence, Douglas Fir select structural lumber for floor joist and girder, and 60 PSF live and dead load (Figure 1)

FIGURE 1

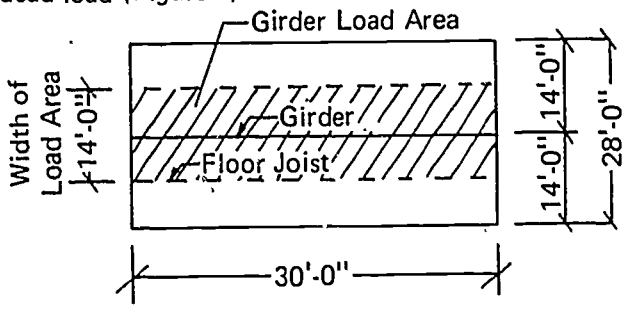

1. Determine maximum moment

   a. $M = \frac{wl^2}{8}$

      1) l = 30' length of girder for calculation

      2) W = 14'-0 x 60 PSF = 840 PSF load on 1 linear foot of girder

   b. $M = \frac{840 \text{ PSF } (30)^2}{8} = 94{,}500$ ft.-lb., or 1,134,000 in.-lb.

2. Determine maximum vertical shear

   a. $V = \frac{wl}{2}$

   b. $V = \frac{840 \text{ PSF } (30)^2}{2} = 378{,}000$ lb.

3. Fiber stress for Douglas Fir select structural is 1,900 PSI

ASSIGNMENT SHEET #2

4. Determine the minimum allowable section modulus

   a. $S = \frac{M}{f}$

   b. $S = \frac{1{,}134{,}000 \text{ in.-lb.}}{1{,}900 \text{ PSI}} = 596.842 \text{ in}^3$

   c. Checking this figure against several beams, the beam would be greater than a 6 x 12 (Table 1).

   d. Therefore, by shortening the span and adding piers, the correct girder can be selected

TABLE 1--SECTION MODULUS OF BEAMS

2 x 6	$S = 8.57 \text{ in.}^3$
2 x 8	$S = 15.32 \text{ in.}^3$
2 x 10	$S = 24.44 \text{ in.}^3$
2 x 12	$S = 35.82 \text{ in.}^3$
3 x 8	$S = 24.6 \text{ in.}^3$
3 x 10	$S = 39.48 \text{ in.}^3$
3 x 12	$S = 57.86 \text{ in.}^3$
3 x 14	$S = 79.73 \text{ in.}^3$
4 x 12	$S = 79.90 \text{ in.}^3$
6 x 12	$S = 121.23 \text{ in.}^3$

5. Place 3 pier supports and shorten the span for girder to 4 equal 7'-6" spans

6. Determine the minimum allowable section modulus

   a. $M = \frac{840 \text{ PSF } (7.5)^2}{8} = 5906.25 \text{ ft.-lb. or } 70875.0 \text{ in.-lb.}$

   b. $S = \frac{M}{f}$

   c. $S = \frac{70875}{1900} = 37.30 \text{ in.}^3$

   d. Checking section modulus of beams, a 3 x 10 is closest to the one-third or one-half ratio of b to d

ASSIGNMENT SHEET #2

7. Check for horizontal shear

   a. $H = \frac{3V}{2bd}$

   b. $V = \frac{840 \text{ PSF } (7.5)^2}{2} = 236.25$

   c. 3 x 10 = 2 1/2 x 9 1/2 actual size

   d. $H = \frac{(3)\ (236.25)}{(2)\ (2.5 \times 9.5)} = 14.92$ PSI

   e. Douglas Fir select structural has an allowable horizontal shear of 120 PSI, and so the girder will work

8. Check for deflection

   a. $\Delta = \frac{5wl^3}{348EI}$

   b. w = 840 PSF

   c. l = 7.5' or 90"

   d. E = 1,760,000 PSI, Douglas Fir

   e. $I = 178.62 \text{ in.}^4$

   f. $\Delta = \frac{(5)\ (840)\ (7.5)^3}{(348)\ (1{,}760{,}000) \times 178.62} = 0.16$ in.

   g. Checking code, maximum = l/360

   $\frac{7.5' \times 12''}{360} = 0.25$ in.

   h. Therefore; deflection is less than code, so the girder will work

Directions: Determine the size of a wood girder for the following problems.

Problems:

A. 24' wide x 32' long one-story residence with live and dead load total of 50 PSF, and Southern Pine No. 1 dense lumber

B. Determine the wood girder size of a building project assigned by instructor

(NOTE: This may be for your design project.)

STRUCTURAL SYSTEMS AND BUILDING MATERIALS
UNIT V

ASSIGNMENT SHEET #3--DETERMINE SIZES OF STEEL BEAMS

Introduction: Steel is rolled into many shapes and is available in a variety of strengths to meet the requirements of frame construction. The principal shapes rolled for structural beams are wide flange (W), American standard (S), and miscellaneous shapes (M). References to properties of steel and tables will be found in the *Manual of Steel Construction*. Steel beams are given a three numeral designation to indicate their shape, height in inches, and weight in pounds per foot. The procedure used in steel design is similar to wood beam design. The beam design is for a uniformly loaded beam.

Example:

Given: 28' wide 30' long residence, 60 PSF live and dead load, and A36 steel (Figure 1)

FIGURE 1

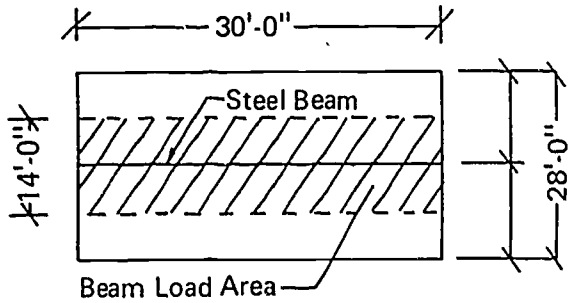

1. Determine the maximum moment

   a. $M = \frac{wl^2}{8}$

   b. $l = 30'$

   c. $w = 14'\text{-}0 \times 60 = 840$ PSF

   d. $M = \frac{(840)(30)^2}{8} = 94500$ PSF or 1,134,000 PSI

2. Determine maximum vertical shear

   a. $V = \frac{wl}{2}$

   b. $V = \frac{(840)(30)}{2} = 12600$ lb.

3. Strength of steel was given as A36

ASSIGNMENT SHEET #3

4. Determine the section modulus

a. $S = \frac{M}{f}$

b. f = 24,000 PSI constant for steel

c. $S = \frac{1134000}{24000} = 47.25 \text{ in.}^3$

d. Checking this figure against the section modulus in the *AISC Manual*, the following beams will work (Table 1)

TABLE 1

W 10 x 45	$S = 49.1 \text{ in.}^3$
M 16 x 31	$S = 47.0 \text{ in.}^3$

5. Check the beam choice for horizontal shear

a. $fv = \frac{V}{dt}$

b. d = 16 in.

c. t = thickness of web = .275

d. $fv = \frac{12600}{(16)(.275)} = 2863.6$ PSI less than 14,500 PSI A36 steel

(NOTE: W10 x 45 was not used because of exceeding deflection of 30' span as shown in tables.)

6. Check the beam for deflection

a. $\Delta = \frac{wl^3}{348EI}$

b. E = 29,000,000 PSI steel

c. $I = 372.5 \text{ in.}^4$ taken through x-axis in AISC table for M 16 x 31 beam

d. $\Delta = \frac{(840)(360)^3}{348 \times 29{,}000{,}000 \times 706} = .003 \text{ in.}$

e. Allowable deflection is $\frac{1}{360} = \frac{360}{360} = 0.0$

ASSIGNMENT SHEET #3

Directions: Determine the size of a steel beam for the following problems.

Problems:

A. 24' wide 32' long one-story residence with live and dead load total of 50 PSF, and A36 steel beam

B. As assigned by instructor

(NOTE: This may be for your design project.)

STRUCTURAL SYSTEMS AND BUILDING MATERIALS
UNIT V

ASSIGNMENT SHEET #4--DETERMINE SIZES OF EXTERIOR OR INTERIOR WALL HEADERS

Introduction: Header sizes can be determined by using the wood beam design procedure or by refering to a header table. Most header tables have been prepared from a wood beam design procedure.

Example: Determine header size for a window opening of 6'-0" for a 26'-0" wide residence. Live and dead loads on roof are 45 PSF. Southern Pine No. 1 dense lumber is used.

1. Determine maximum moment

   a. $M = \frac{wl^2}{8}$

   b. w = (13'-0") [1/2 span] x 45 PSF = 585 PSF

   c. l = 6'-0"

   d. $M = \frac{(585)(6)^2}{8}$ = 2632.5 PSF or 31590.0 PSI

2. Determine minimum allowable section modulus

   a. $S = \frac{M}{f}$

   b. f = 1750 PSI for Douglas Fir #1 dense

   c. $S = \frac{31590}{1750} = 18.05 \text{ in.}^2$

   d. Checking the section modulus chart (Table 1) 2 - 2 x 8 will be needed for header above 6'-0" window opening

TABLE 1

Nominal Size	Section Modulus
2 · 2 x 4	6.13 in.^{3}
2 · 2 x 6	15.13 in.^{3}
2 · 2 x 8	28.13 in.^{3}
2 · 2 x 10	45.13 in.^{3}
2 · 2 x 12	66.13 in.^{3}

(NOTE: Actual size dimensions were used to calculate section modulus.)

ASSIGNMENT SHEET #4

Directions: Determine the size of headers of given openings.

Problems:

A. 20' wide x 30' long residence. Douglas Fir select structural, garage door opening = 14'-0", and 40 PSF live and dead load

B. 24' wide x 32' long residence, Southern Pine No. 1 KD, exterior wall window opening = 6'-6", and 40 PSF live and dead load

C. As assigned by instructor

(NOTE: This may be for your design project.)

STRUCTURAL SYSTEMS AND BUILDING MATERIALS
UNIT V

ANSWERS TO ASSIGNMENT SHEETS

Assignment Sheet #1

A. 2 x 12 joist will span 18'-5" with one girder in middle or 2 girders with 2 x 8 joists

B. 2 x 10 joist will span 15'-4" with one girder in middle

C. Evaluated to the satisfaction of the instructor

D. 2 x 8 will span 17'-5"

E. 2 x 8 will span 16'-3"

F. Evaluated to the satisfaction of the instructor

Assignment Sheet #2

A. Section modulus = 32.91 in.^{3} for 8'-0" span; use 3 x 10 girder

B. Evaluated to the satisfaction of the instructor

Assignment Sheet #3

A. Section modulus = 38.4 for 16'-0" span; use W 10 x 45 or M 16 x 26

B. Evaluated to the satisfaction of the instructor

Assignment Sheet #4

A. Section modulus = 61.89 in.^{3}; use 2 - 2 x 12 headers

B. Section modulus = 17.38 in.^{3}; use 2 - 2 x 8 headers

C. Evaluated to the satisfaction of the instructor

STRUCTURAL SYSTEMS AND BUILDING MATERIALS
UNIT V

NAME _____

TEST

1. Match the terms on the right with the correct definitions.

_____a. System used in a two-story house where the second story framing is the same as first story

_____b. System which uses a continuous stud for the full two stories with exterior and interior supporting walls resting on the sill

_____c. Any part of a building unit

_____d. The lowest member of the frame of a structure, resting on the foundation and supporting the floor joists or the interior walls

_____e. A horizontal member placed perpendicular to floor or ceiling joists and to which joists are nailed in framing floors, a chimney, a stairway, or other opening

_____f. Composed of an insulation material which is placed between sill and foundation

_____g. A horizontal structural member which supports the floor or ceiling system

_____h. The bottom horizontal member of a frame wall

_____i. The top horizontal member of a frame wall

_____j. A wall that subdivides spaces within any story of a building

_____k. The measurement of spacing for studs, rafters, joists, and other framing members from the center of one member to the center of the next

_____l. Small wood or metal members that are inserted in a diagonal position between the floor joists at midspan

_____m. Solid wood blocking used between floor joists to keep joists vertical and in alignment

1. Rafter
2. Header
3. Pitch
4. Trimmer
5. Sole plate
6. Lookout
7. Member
8. Ridge
9. Balloon framing system
10. Valley rafter
11. Bridging
12. Sill plate
13. Ledger

_____n. A wood strip let into the studding to provide a bearing surface for joists

_____o. A wood strip nailed to the lower side of a girder to provide a bearing surface for joists

_____p. A large horizontal structural member used to support the ends of joists and beams or to carry walls over openings

_____q. A metal U-shaped strap used to support framing members

_____r. The longest framing member around a rectangular opening into which a header is joined

_____s. A structural member that is cut less than full length

_____t. That portion of a roof that projects out from the wall

_____u. A horizontal board nailed onto the ends of the rafters

_____v. The underside of an overhanging cornice

_____w. A short wooden framing member used to support an overhang portion of the roof

_____x. A horizontal member connecting the top of the siding with the soffit of the cornice

_____y. A structural member in a roof framework running from the eave to the ridge

_____z. The lower portion of a roof which extends beyond the wall

____aa. The top edge of the roof where two slopes meet

____bb. A low wall or railing around the edge of a roof

____cc. The diagonal rafter that extends from the plate to the ridge to form the hip

____dd. The diagonal rafter at the intersection of two intersecting sloping roofs

____ee. A rafter that spans the distance from the wall plate to a hip, or from a valley to a ridge

14. Fascia
15. Joist
16. Span
17. On center
18. Hip rafter
19. Top plate
20. Purlin
21. Cornice
22. Ribbon
23. Trusses
24. Soffit
25. Platform framing system
26. Jack rafter
27. Stirrup
28. Frieze
29. Partition
30. Sill sealer
31. Cripple

____ff. The measured vertical distance from the top of the wall plate to the intersection of the center line of the rafters

____gg. One-half the span given as 12 units

____hh. Ratio between the rise and run of a roof

____ii. The angle of the roof from the ridge to the plate

____jj. The horizontal distance from the outside of one stud wall to the outside of the opposite stud wall

____kk. Structural members arranged and fastened in triangular units to form a framework for support of loads over a long span

____ll. Wall construction consisting of posts rather than studs

mm. Horizontal roof framing member laid perpendicular to rafters over trusses for bracing the roof

____nn. A beam made of superimposed layers of similar materials uniting them with glue and pressure

32. Eave
33. Laminated beam
34. Girder
35. Parapet wall
36. Post and beam construction
37. Rise
38. Slope
39. Run
40. Solid bridging

2. Identify types of two-story framing systems.

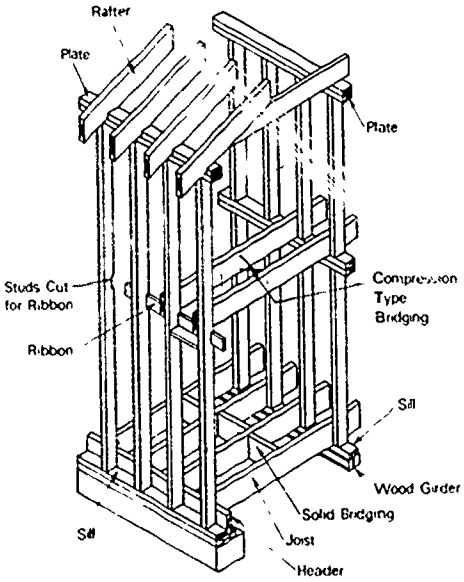

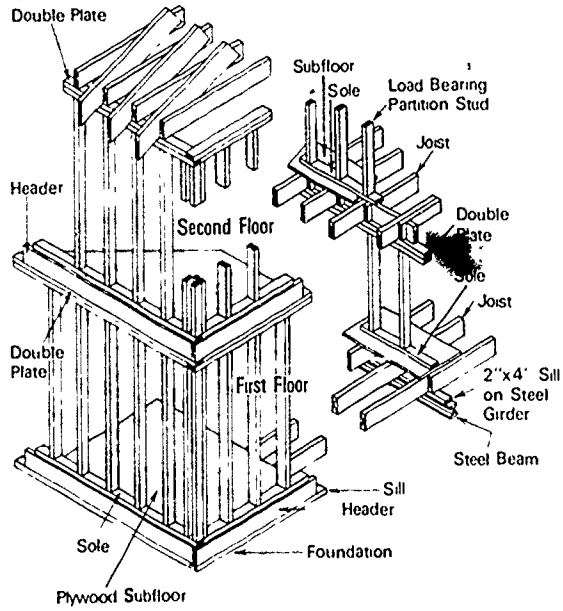

a. _____ b: _____

3. Select types of wood floor sill constructions by placing an "X" in the appropriate blanks.

_____a. Square

_____b. Balloon

_____c. Platform

_____d. Box

_____e. Stirrup

4. Identify types of wood floor joist framings.

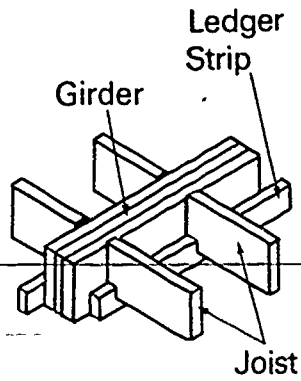

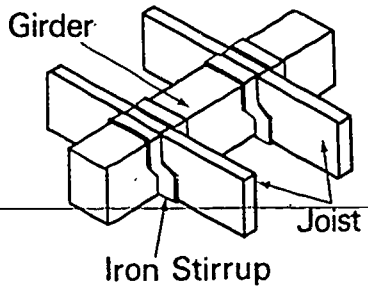

a. _____ b. _____

5. State the purpose of bridging.

_____

6. Identify wall framing members.

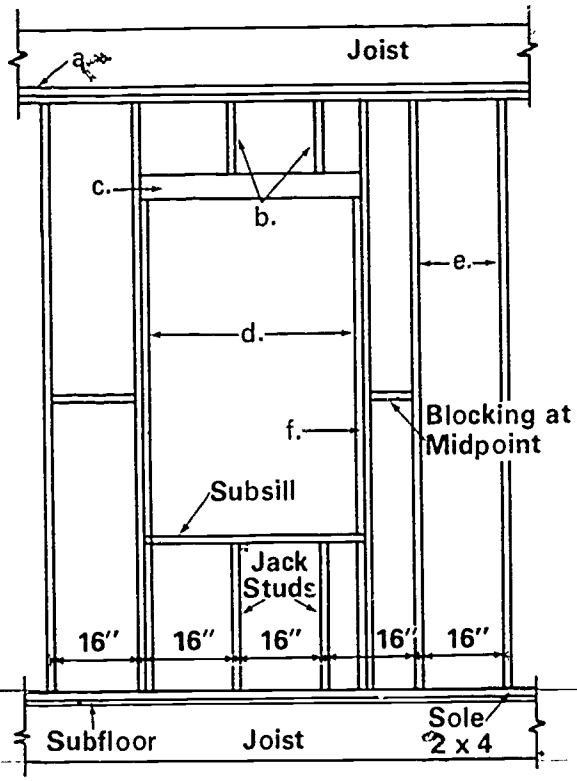

a. _____ b. _____

c. _____ d. _____

e. _____ f. _____

7. List three methods of frame bracing.

a. _____

b. _____

c. _____

8. Complete the following list of types of sheathing.

a. Solid lumber

b. _____

c. _____

d. Gypsum

e. Plastics

9. Identify types of roofs.

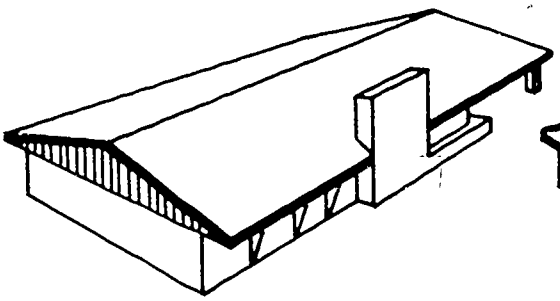

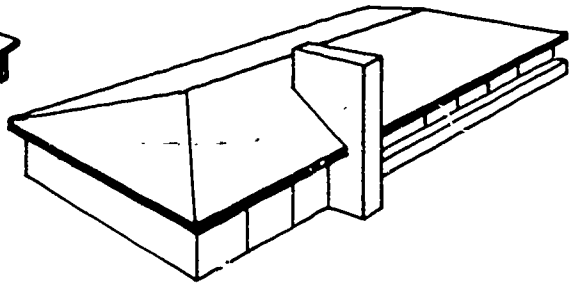

a. _____ b. _____

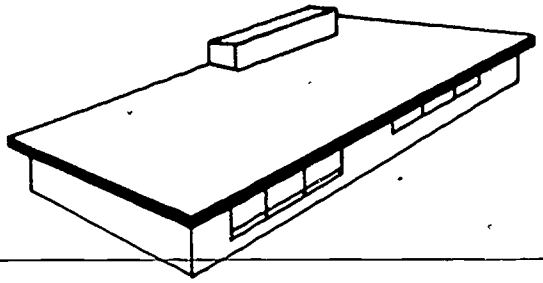

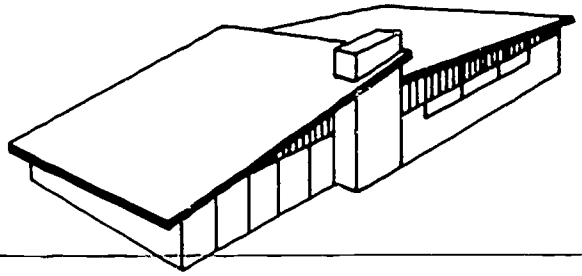

c. _____ d. _____

10. Identify roof framing members for the following shed and hip roofs.

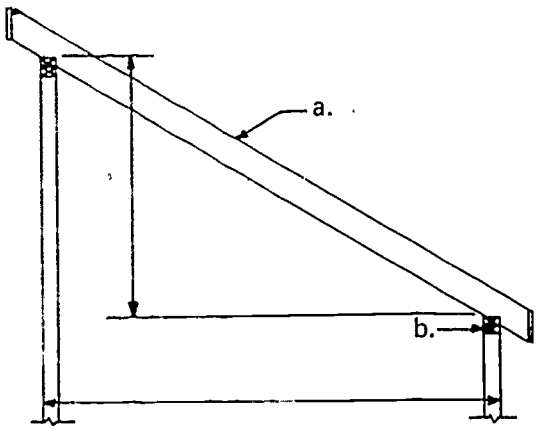

Shed

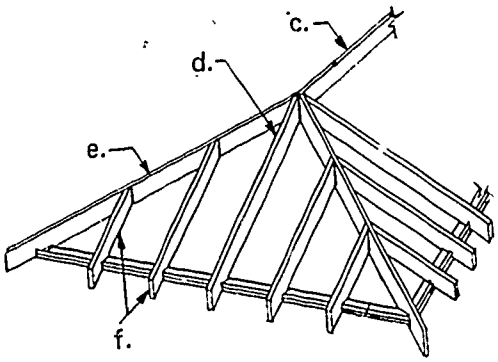

Hip

a. _____ b. _____

c. _____ d. _____

e. _____ f. _____

11. Identify types of cornices.

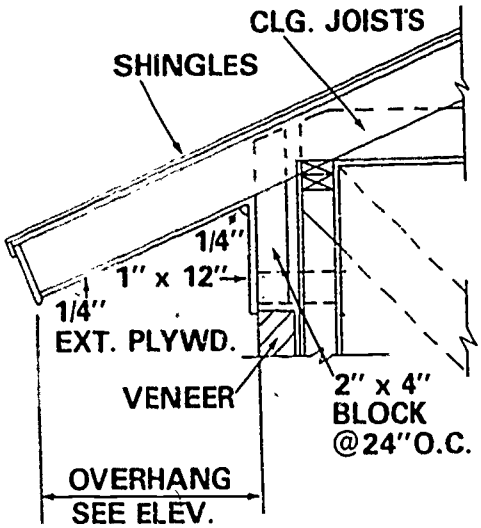

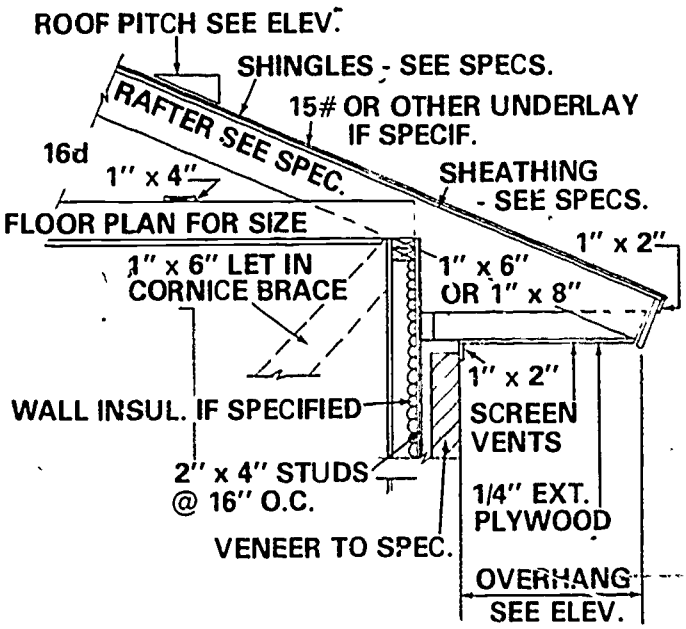

a. _____ b. _____

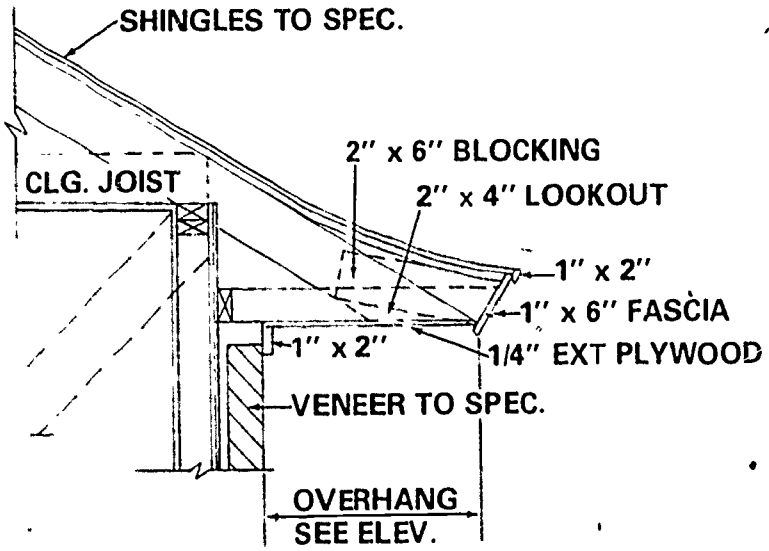

c. _____

12. Identify types of post and beam framing.

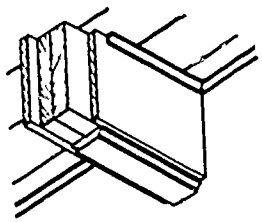

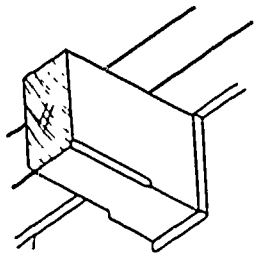

a. _____ b. _____

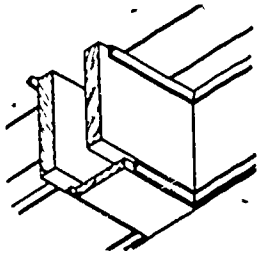

c. _____

13. Match the building materials on the right with the correct definitions.

_____a. A powder of alumina, silica, lime, iron oxide, and magnesia burned together in a kiln to be ed as a binding agent in mortar or concrete

_____b. A ratio mixture of cement, sand, and aggregate with water; when mixed and cast, it reaches a load bearing design strength in 28 days

_____c. Clean gravel or crushed rock from 1/4" to 1 1/2" in diameter.

_____d. Chemicals used to make the concrete mix more workable, slower or faster in hardening, freeze resistant, or other desired quality

_____e. Casting concrete used around steel cables or rods which are under tension to counteract stresses caused by external loading

_____f. Concrete used for steel rods in tubes which are placed under tension after concrete has hardened

_____g. Natural sun-dried clays or earth and a binder

1. Prestressed concrete
2. Aggregate
3. Concrete
4. Cement
5. Kiln-burned brick
6. Adobe
7. Sand lime brick

_____h. Natural clays with chemicals sometimes added for color which are molded to shape, dried, and fired for hardness

_____i. A mixture of sand and lime, molded and hardened under steam pressure

_____j. A mixture of cement and fine aggregates, molded into solid or core units and hardened chemically

_____k. Cement, hydrated lime, sand, and water

_____l. Cement, sand, aggregate, or other lightweight aggregate materials molded and hardened under steam pressure

_____m. A type of structural clay tile used for non-load bearing ornamental effects in construction

_____n. A core of air-entrained gypsum between two layers of treated paper

_____o. A product made of materials that are similar to those used in making brick, but it is a larger building unit

_____p. Two sections of glass, fused together, creating a partial vacuum

_____q. Wood cut into pieces of uniform thickness, width, and length

_____r. A wood product consisting of several layers of lumber with the grain at right angles in each successive layer

_____s. Kiln-dried lumber bonded together in layers with an adhesive to form beams, arches, and other structural members

_____t. The term applied to hot-rolled steel sections, shapes, and plates 1/8" thick or greater

8. Admixture
9. Post-tensioned concrete
10. Concrete block
11. Gypsum wallboard
12. Mortar
13. Lumber
14. Plywood
15. Terra cotta
16. Structural clay tile
17. Glass blocks
18. Concrete brick
19. Structural steel
20. Glue laminated timber

14. Complete the following chart of material symbols used on plan, elevation, and section drawings.

Material	Plan	Elevation	Section
Earth	None	None	
			Same as Plan View
Concrete Block			
Gravel Fill	Same as Section	None	
Wood	Floor Areas Left Blank	Siding Panel	Finish Framing
Brick	Face Common	Face or Common	None
Stone	Cut Rubble	Cut Rubble	Cut Rubble
		Indicate by Note	Specify
Sheet Metal Flashing	None		Show Contour
Insulation	Same as Section	Insulation	Loose Fill or Batt Board
Plaster	Same as Section	Plaster	Stud Lath and Plaster
Glass			Large Scale Small Scale

15. Select materials in a concrete mix by placing an "X" in the appropriate blanks.

_____a. Water

_____b. Mortar

_____c. Sand

_____d. Cement

_____e. Glass

_____f. Aggregate

_____g. Admixture

16. Name the physical properties that affect strength of concrete.

a. _____

b. _____

17. Match the construction masonry products on the right with the correct uses.

_____a. Used for decorative effects on buildings or non-load bearing walls

_____b. Used for load bearing walls in dry climate regions

_____c. Used for walls, backing, and other applications where appearance is not important

_____d. Manufactured under controlled dimensions, color, and structural qualities for building construction

_____e. Used in decorative and special service applications

_____f. Used in fireplaces, incinerators, and industrial smelting furnaces

_____g. Used in drives or areas where abrasion is a factor

_____h. Used as either plain or colored to cement masonry products together

_____i. Used as non-load bearing partition walls, loadbearing walls, backup for certain walls, and as fireproofing around structural steel

1. Concrete block
2. Paving brick
3. Face brick
4. Fire brick
5. Cut stone or concrete brick
6. Tile
7. Structural clay tile
8. Mortar
9. Glazed brick
10. Common brick
11. Adobe

_____j. Used for non-load bearing partition walls, loadbearing walls, and foundation walls

_____k. Used for floor and wall coverings of residences and commercial buildings that are set in cement, latex adhesive, or an epoxy mortar

18. Match the glass products on the right with the correct uses.

_____a. Used for windows in thicknesses of 3/32" single strength, 1/8" double strength, and 1/4" heavy sheet plate

_____b. Used to overcome the hazards of sheet glass in large, exposed, or public areas

_____c. A unit of two or more sheets of glass separated by 1/8" to 1" air space, dehyrated, and sealed for windows

_____d. Sheet glass with a pattern on both sides to diffuse light for privacy

_____e. Used for leaded glass for windows and decorative pieces

1. Safety
2. Insulating
3. Pattern
4. Sheet
5. Stained

19. Complete the following list of the uses of plastic in building construction.

a. Laminates

1) Counter tops

2) Doors

3) _____

b. Coatings on wood or gypsum

c. _____

d. _____

e. Trim and ornamental decor items

f. Film for vapor barriers

20. Match the types of insulation materials on the right with the correct characteristics.

_____a. Available in 16" to 24" widths, 1" to 6" thicknesses, and 4' to 8' lengths of fiberglass, rock wool, or cellulose material with paper or aluminum foil backing	1. Loose fill
_____b. Available in bags; made from rock wool, fiberglass, cellulose, or polystyrene material	2. Rigid
_____c. Plastics that have blowing agents added to them which are deposited on the job site with a spray gun	3. Blanket or batt
_____d. Made of fiberboard, fiberglass, polystyrene, or polyurethane that is available in sheet form with optional aluminum backing	4. Foam

21. Match the metal products on the right with the correct uses.

_____a. Used for girders, columns, and brick masonry lintels	1. Welded wire fabric
_____b. Used in structural steel open web beams and in reinforced concrete	2. Gauge metals
_____c. Mesh used for reinforcement of concrete	3. Reinforcing bars
_____d. Used for wall studs, windows and door frames, roof flashings, duct work, roofing, and wall siding	4. Structural steel shapes
_____e. Aluminum, brass, and copper used for windows, thresholds, siding, electrical wiring, gutters, and flashing	5. Nonferrous metals

22. Select materials commonly used to cover a roof by placing an "X" in the appropriate blanks.

_____a. Wood shingles

_____b. Brick

_____c. Clay tile

_____d. Asphalt shingles

_____e. Welded wire fabric

23. List wood products used in construction.

a. _____

b. _____

c. _____

24. Complete the following chart of nominal and actual sizes for dimension lumber.

Nominal Size	Actual Size
2 x 4	_____
_____	1 1/2 x 5 1/2
2 x 8	1 1/2 x _____
2 x 10	_____
_____	1 1/2 x 11 1/2

25. List information which must be given to a truss manufacturer.

a. _____

b. _____

c. _____

26. Match the structural design terms on the right with the correct definitions.

_____a. The weight of the materials used to construct the building

_____b. The weight or force exerted by items that are not a part of the building itself

_____c. A downward force at or near the support that tends to cut or shear the beam off at the supports

_____d. Force which causes a beam to fail by pulling the fibers apart parallel to the beam

_____e. The force that tends to cause the point of load on a beam to rotate about a column connection or support

_____f. A force due to moments in the beam which tend to bend the beam past failure

_____g. The force needed to resist moments to maintain equilibrium

1. Moment
2. Deflection
3. Live load
4. Reaction
5. Horizontal shear
6. Fiber stress
7. Dead load

_____h. A property of a material measuring its maximum allowable fiber strength at the farthest point from the neutral axis

_____i. Permissible bending according to local code depending upon beam's length of span, load, and material

_____j. Used to determine the rectangular cross-section of a beam that will resist moments

_____k. Used to determine the rectangular cross-section of a beam that will determine the allowable deflection in a beam

_____l. The rate of deformation of a material as stress is applied to it

8. Modulus of elasticity
9. Section modulus
10. Vertical shear
11. Bending
12. Modulus of inertia

27. Match the structural design terms on the right with the correct formulas.

_____a. $V = \frac{wl}{2}$

_____b. $H = \frac{3V}{2bd}$

_____c. $M = \frac{wl^2}{8}$

_____d. $\Delta = \frac{5wl^3}{348EI}$

_____e. $S = \frac{bd^2}{6}$

_____f. $I = \frac{bd^3}{12}$

1. Section modulus
2. Maximum moment
3. Deflection
4. Vertical shear
5. Horizontal shear
6. Modulus of inertia

28. Complete the following chart of abbreviations.

a.	_____	AB	g.	Partition	_____
b.	Center to center	_____	h.	Plywood	_____
c.	Floor	_____	i.	_____	R
d.	_____	HDR	j.	_____	RF
e.	_____	LBR	k.	Siding	_____
f.	On center	_____	l.	Window	_____

29. Demonstrate the ability to:

a. Determine sizes of wood floor joists and roof rafters.

b. Determine sizes of wood girders.

c. Determine sizes of steel beams.

d. Determine sizes of exterior or interior wall headers.

(NOTE: If these activities have not been accomplished prior to the test, ask your instructor when they should be completed.)

STRUCTURAL SYSTEMS AND BUILDING MATERIALS
UNIT V

ANSWERS TO TEST

1.

a.	25	k.	17	u.	14	ee.	26
b.	9	l.	11	v.	24	ff.	37
c.	7	m.	40	w.	6	gg.	39
d.	12	n.	22	x.	28	hh.	38
e.	2	o.	13	y.	1	ii.	3
f.	30	p.	34	z.	32	jj.	16
g.	15	q.	27	aa.	8	kk.	23
h.	5	r.	4	bb.	35	ll.	36
i.	19	s.	31	cc.	18	mm.	20
j.	29	t.	21	dd.	10	nn.	33

2. a. Balloon
   b. Platform

3. b, d

4. a. Notched
   b. Hung with stirrups

5. To brace the joists

6. a. Top plate
   b. Cripple studs
   c. Header
   d. Rough opening
   e. Studs (2 x 4)
   f. Trimmer

7. a. Metal straps on exterior walls
   b. 1 x 4 set into studs
   c. Plywood sheet

8. b. Plywood
   c. Fiberboard

9. a. Gable
   b. Hip
   c. Flat
   d. Shed

10. a. Common rafter
    b. Double plate
    c. Ridge
    d. Common rafter
    e. Hip rafter
    f. Hip jack rafters

11. a. Wide box without lookouts
    b. Wide box with lookouts
    c. Swept eave

12. a. Cased
    b. Solid
    c. Spaced

13.

a.	4	k.	12
b.	3	l.	10
c.	2	m.	15
d.	8	n.	11
e.	1	o.	16
f.	9	p.	17
g.	6	q.	13
h.	5	r.	14
i.	7	s.	20
j.	18	t.	19

14.

Material	Plan	Elevation	Section
Earth	None	None	
Concrete			Same as Plan View
Concrete Block			
Gravel Fill	Same as Section	None	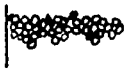
Wood	Floor Areas Left Blank	 Siding Panel	 Framing  Finish
Brick	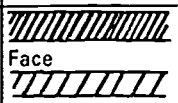 Face Common	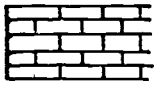 Face or Common	
Stone	 Cut Rubble	 Cut Rubble	 Cut Rubble
Structural Steel	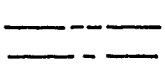	Indicate by Note	 Specify
Sheet Metal Flashing			 Show Contour

Insulation	Same as Section	Insulation	Loose Fill or Batt Board
Plaster	Same as Section	Plaster	Stud Lath and Plaster
Glass			Large Scale Small Scale
Tile			

15. a, c, d, f, g

16. a. Temperature
    b. Water

17. a. 5
    b. 11
    c. 10
    d. 3
    e. 9
    f. 4
    g. 2
    h. 8
    i. 7
    j. 1
    k. 6

18. a. 4
    b. 1
    c. 2
    d. 3
    e. 5

19. a. 3) Wall surfacing
    c. Gutters and downspouts
    d. Pipe

20. a. 3
    b. 1
    c. 4
    d. 2

21. a. 4
    b. 3
    c. 1
    d. 2
    e. 5

22. a, c, d

23. a. Dimension lumber
    b. Plywood
    c. Glue laminated timber

24.

2 x 4	1 1/2 x 3 1/2
2 x 6	1 1/2 x 5 1/2
2 x 8	1 1/2 x 7 1/2
2 x 10	1 1/2 x 9 1/2
2 x 12	1 1/2 x 11 1/2

25. Any three of the following:

    a. Span
    b. Roof pitch
    c. Spacing of trusses
    d. Roof load

26.

a.	7	g.	4
b.	3	h.	6
c.	10	i.	2
d.	5	j.	9
e.	1	k.	12
f.	11	l.	8

27. a. 4
    b. 5
    c. 2
    d. 3
    e. 1
    f. 6

28.

a.	Anchor bolt	g.	PTN
b.	C to C	h.	PLY
c.	FL	i.	Riser
d.	Header	j.	Roof
e.	Lumber	k.	SDG
f.	OC	l.	WDW

29. Evaluated to the satisfaction of the instructor

INTRODUCTION TO WORKING DRAWINGS
UNIT VI

UNIT OBJECTIVE

After completion of this unit, the student should be able to arrange in order a set of working drawings and identify plan and elevation symbols of doors and windows. The student should also be able to sketch and draw floor plans and elevations. This knowledge will be evidenced by correctly performing the procedure outlined in the assignment sheets and by scoring 85 percent on the unit test.

SPECIFIC OBJECTIVES

After completion of this unit, the student should be able to:

1. Match terms related to working drawings with the correct definitions.
2. Identify information on a title block.
3. Complete a list of methods for placing the title block on a drawing.
4. Select information on a title sheet, cover sheet, or index.
5. Match common U.S. scales used with the correct parts of a set of working drawings.
6. Arrange in order a set of residential working drawings.
7. Complete a chart of abbreviations.
8. Identify plan symbols of various doors and windows.
9. Identify plan symbols of bathroom and kitchen fixtures and built-in components.
10. Identify elevation symbols of various doors and windows.
11. Match exterior materials with the correct symbols.
12. Select true statements concerning factors to consider when drawing elevations.
13. Arrange in order the steps in projecting elevations.
14. Match reference methods with the correct symbols.
15. List types of schedules.

16. Demonstrate the ability to:

a. Sketch a floor plan of your house.

b. Draw a floor plan from a preliminary sketch.

c. Sketch different roofs on an elevation.

d. Resketch an elevation to eliminate the inconsistent use of materials.

e. Sketch two different elevations of the same floor plan.

f. Draw a front and side elevation

g. Draw a front elevation on an uneven terrain.

h. Complete a door and window schedule.

INTRODUCTION TO WORKING DRAWINGS
UNIT VI

SUGGESTED ACTIVITIES

I. Provide student with objective sheet.

II. Provide student with information and assignment sheets.

III. Make transparencies.

IV. Discuss unit and specific objectives.

V. Discuss information and assignment sheets.

VI. Provide samples of residential and commercial working drawings.

VII. Discuss the good and bad features of the sample drawings, especially in the floor plan and elevations.

VIII. Discuss which roofs are usually used on different styles of houses and buildings.

IX. Provide examples of roof styles other than the basic styles. Try to include Gambrel, Mansard, and others which are used in your area.

X. Provide *Sweet's Catalog File* or manufacturer's product catalogs for use in Assignment Sheet #8.

XI. Give test.

INSTRUCTIONAL MATERIALS

I. Included in this unit:

A. Objective sheet

8. Information sheet

C. Transparency masters

1. TM 1--Information on a Title Block
2. TM 2--Title Sheet
3. TM 3--Set of Working Drawings
4. TM 4--Door Plan Symbols
5. TM 5--Window Plan Symbols
6. TM 6--Plan Symbols
7. TM 7--Door Elevation Symbols

8. TM 8--Window Elevation Symbols
9. TM 9--Ways Different Roofs Affect Elevation Appearance
10. TM 10--Factors Which Affect Elevation Appearance
11. TM 11--Projecting an Elevation
12. TM 12--Reference Methods
13. TM 13--Use of Reference Methods
14. TM 14--Use of Reference Methods (Continued)
15. TM 15--Use of Reference Methods (Continued)
16. TM 16--Window Schedule
17. TM 17--Door Schedule
18. TM 18--Room Finish Schedule

D. Assignment sheets

1. Assignment Sheet #1--Sketch a Floor Plan of Your House
2. Assignment Sheet #2--Draw a Floor Plan from a Preliminary Sketch
3. Assignment Sheet #3--Sketch Different Roofs on an Elevation
4. Assignment Sheet #4--Resketch an Elevation to Eliminate the Inconsistent Use of Materials
5. Assignment Sheet #5--Sketch Two Different Elevations of the Same Floor Plan
6. Assignment Sheet #6--Draw a Front and Side Elevation
7. Assignment Sheet #7--Draw a Front Elevation on an Uneven Terrain
8. Assignment Sheet #8--Complete a Door and Window Schedule

E. Test

F. Answers to test

II. References:

A. Hepler, Donald E. and Paul I. Wallach. *Architecture Drafting and Design.* St. Louis: Gregg Division/McGraw-Hill Book Co., 1977.

B. Spence, William P. *Architecture Design · Engineering · Drawing.* Bloomington, IL: McKnight Publishing Co., 1979.

C. Kicklighter, Clois E. *Architecture: Residential Drawing and Design.* South Holland, IL: Goodheart-Willcox Co., Inc., 1973.

INTRODUCTION TO WORKING DRAWINGS
UNIT VI

INFORMATION SHEET

I. Terms and definitions

A. Working drawing--Any drawing used to give information for the manufacture or construction of a structure

B. Set of working drawings--All the information needed by a builder to complete a building exactly as intended by the designer or architect

(NOTE: Specifications or description of materials are included in any set of drawings.)

C. Title block--Located in lower right hand corner of drawing sheet to identify the firm, address, title, drafter, date, project number, and sheet number

D. Reference symbols--Keying symbol system used to locate information and refer from one drawing sheet to another

(NOTE: Special symbols vary from company to company.)

E. Schedules--Organized information in tabular form which gives detailed information about such items as doors or windows

F. Match lines--Used to match portions of a building that appear on several drawing sheets

G. Key plan--Identifies each unit area of a building and the cross hatched unit indicates the area which appears on the drawing sheet

H. Legend--An explanatory list of the symbols used on a drawing or set of drawings

I. Veneered wall--A wall with some type of masonry face which is attached to, but not sobound to the body of the wall as to exert a common reaction under load

J. Wainscot--Facing for the lower part of an interior wall which is finished differently from the remainder of the wall

K. Slope--Relationship between rise and run showing slant of roof

L. Rise--Vertical distance covered by a roof

M. Run--Horizontal distance covered by a roof

INFORMATION SHEET

II. Information on a title block (Transparency 1)

A. Name of owner and address of site

B. Firm or name of school

C. Title of sheet

D. Drawn by

(NOTE: Drafter's name or initials.)

E. Approved by

F. Scale

G. Checked by

H. Date

I. Sheet number

J. Project or job number

III. Methods for placing the title block on a drawing

A. Commercially printed on vellum or film

B. Plastic film appliques

(NOTE: This is placed on reversed side of vellum or film.)

C. Rubber stamp

(NOTE: This is placed in lower right corner of vellum and then border lines are added.)

D. Hand drawn

(NOTE: 1" minimum borders are placed on left hand side of sheet for purpose of binding.)

IV. Information on a title sheet, cover sheet, or index (Transparency 2)

A. Project name and address

B. Numerically listed index of drawings in the set of working drawings

(NOTE: Often survey information is included.)

INFORMATION SHEET

V. Common scales used on a set of working drawings

		U.S.	ISO METRIC (mm)
A.	Plot plan	1" = 20' or 40'	1:100, 1:200 or 1:500
B.	Foundation plan	1/8" or 1/4" = 1'-0"	1:100 or 1:50
C.	Floor plan	1/8" or 1/4" = 1'-0"	1:100 or 1:50
D.	Elevations	1/8" or 1/4" = 1'-0"	1:100 or 1:50
E.	Construction details	3/4" to 1 1/2" = 1'-0"	1:20 or 1:10
F.	Wall section details	3/4" to 1 1/2" = 1'-0"	1:20 or 1:10
G.	Interior elevations	3/8" to 1/2" = 1'-0"	1:50 or 1:25

VI. Suggested arrangement of a set of working drawings (Transparency 3)

(NOTE: This varies since different plans seldom have the same number and kinds of plans.)

Residential	Commercial
	(NOTE: A = Architecture, S = Structural, E = Electrical, M = Mechanical.)
1. Sheet 1 Plot or site plan	A-1 Plot or site plan
2. Sheet 2 Foundation plan	A-2 Foundation plan
3. Sheet 3 Floor plan	A-3 Floor plan
4. Sheet 4 Elevations	A-4 Elevations
5. Sheet 5 Sections	A-5 Sections and details
6. Sheet 6 Interior elevations and details (optional)	A-6 Schedules S-1 Structural details
7. Sheet 7 Electrical plan	E-1 Electrical plan
(NOTE: This may be shown on floor plan.)	
8. Sheet 8 HVAC plan	M-1 HVAC plan
(NOTE: This may be drawn and completed by HVAC contractor, utility company, or supplier.)	
9. Sheet 9 Plumbing	M-2 Plumbing plan
(NOTE: This is not commonly drawn.)	

INFORMATION SHEET

VII. Abbreviations

ACST--Acoustical

AL--Aluminum

∠--Angle iron

AO--Arched opening

AT--Asphalt tile

BSMT--Basement

BATH--Bathroom

BR--Bedroom

BF DR--Bi-fold door

CAB--Cabinet

CO--Cased opening

CLG--Ceiling

CER--Ceramic

CL--Closet

CONC--Concrete

CONC BL--Concrete block

DR--Dining room

DO--Ditto

DH--Double hung

DS--Double strength

DF--Douglas fir

EL--Elevation

FIN--Finish

FIN FL--Finish floor

FLG--Flooring

FT--Foot

GL--Glass

HDWD--Hardboard

HDW--Hardware

INT--Interior

K--Kitchen

LG--Length

LIN CL--Linen closet

LR--Living room

LVD--Louvered door

MFG--Manufacturing

MATL--Material

OC--On center

PTD--Painted

PTGL--Plate glass

QT--Quarry tile

SCR--Screen

SH--Single hung

SS--Single strength

SLDG--Sliding

SC--Solid core

VAR--Varnish

VT--Vinyl tile

WS--Weather stripping

WP--White pine

w/--With

INFORMATION SHEET

VIII. Plan symbols of doors and windows

A. Doors (Transparency 4)

1. Interior doors

a. Flush or panel

b. French

c. Sliding

d. Pocket

e. Bi-fold

f. Double action

g. Accordion

h. Archway or cased opening

2. Exterior doors

a. Hinged

b. French

c. Sliding

B. Windows (Transparency 5)

1. Double hung

2. Casement

3. Sliding

4. Awning

5. Hopper

6. Fixed picture*

(NOTE: Special windows are indicated by a note.)

IX. Plan symbols of bathroom and kitchen fixtures and built-in components (Transparency 6)

A. Bathroom fixtures

1. Water closet

2. Wall-hung water closet

INFORMATION SHEET

3. Free-standing lavatory
4. Wall hung lavatory
5. Bathtub
6. Shower

B. Kitchen and laundry fixtures

1. Sink
2. Refrigerator
3. Cooktop
4. Free-standing range
5. Oven
6. Dishwasher
7. Washer
8. Dryer
9. Microwave
10. Trash compactor

C. Built in components

1. Fireplace
2. Closet
3. Stairs
4. Bookcases
5. Cabinets

X. Elevation symbols of door and windows

A. Doors (Transparency 7)

1. Flush
2. Panel
3. French
4. Sliding

INFORMATION SHEET

5. Pocket

6. Bi-fold

7. Double action

8. Accordion

B. Windows (Transparency 8)

1. Double hung

2. Casement

3. Sliding

4. Awning

5. Hopper

6. Fixed picture

XI. Exterior material symbols

A. Brick

B. Concrete block

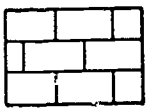

C. Cut stone

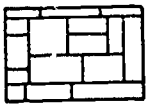

D. Rock

E. Concrete and cement

F. Wood shingle

INFORMATION SHEET

G. Horizontal wood siding

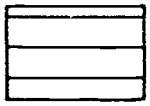

J. Glass

H. Vertical wood siding

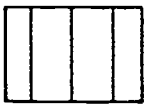

K. Stucco

I. Board and batten

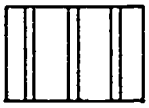

XII. Factors to consider when drawing elevations (Transparencies 9 and 10)

A. Use formal or informal balance

(NOTE: Formal balance is symmetrical, left side is identical to right side. This type of balance is used in traditional architecture. Informal balance is assymetrical and is widely used in contemporary architecture.)

B. Every elevation should have some point of emphasis

C. Use no more than two types of exterior sidings

D. Do not mix types of masonry (stone and brick) or vertical and horizontal siding

(NOTE: This is only a general rule.)

E. The basic horizontal lines of an elevation are the ground line, eave line, and ridge line

Example:

INFORMATION SHEET

F. Door and window lines should be related to other structural lines

G. Sufficient roof overhang is needed to afford protection from sun, rain, and snow

H. Type of roof greatly affects the appearance of an elevation

I. Slope of roof needs to be calculated in order to show the slant of a roof using the following formulas:

Formula: Rise = Vertical distance

Run = Horizontal distance

Slope = Rise/run

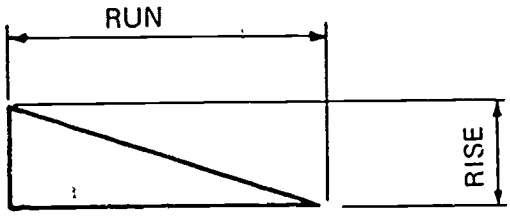

Examples:

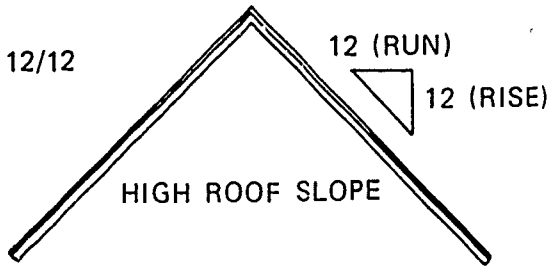

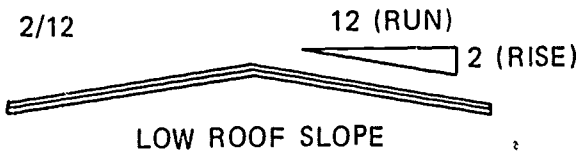

INFORMATION SHEET

XIII. Steps in projecting elevations (Transparency 11)

A. Project floor plan outline and door, window, and chimney locations; draw horizontal lines (ridge, eave, and ground)

B. Lay out roof slope, add roof overhang, locate chimney (if used), and block in outline

C. Lay out door and window outlines, and draw building material divisions

D. Add details and siding symbols, draw vegetation, and add basement outline (if used)

XIV. Reference methods and symbols (Transparencies 12, 13, 14, and 15)

A. Floor elevation

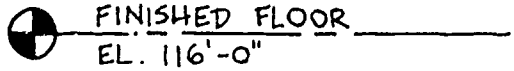

B. Section details, exterior, or interior elevations

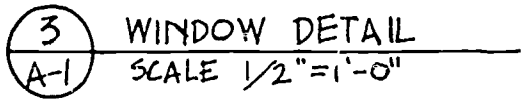

C. Floor plan and elevation

(NOTE: Arrow points in direction view is taken.)

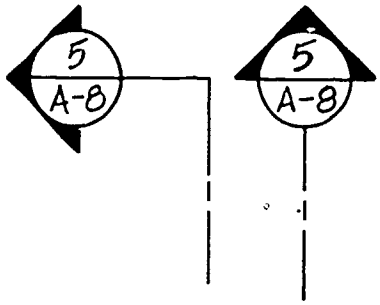

INFORMATION SHEET

D. Schedules

(NOTE: Several geometric shapes may be used for symbols but must be used consistently in all drawings.)

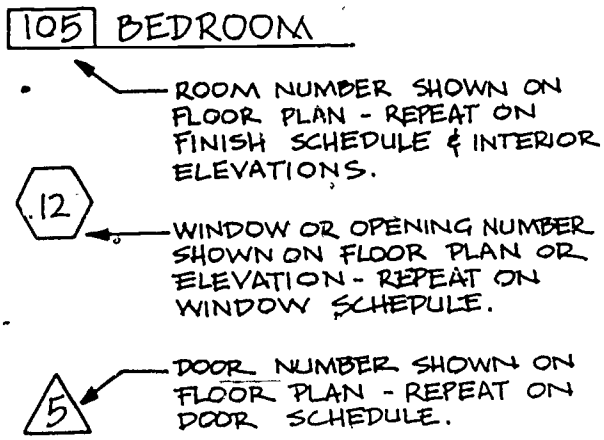

E. Feature

(NOTE: This is used to indicate the area to be enlarged or detailed.)

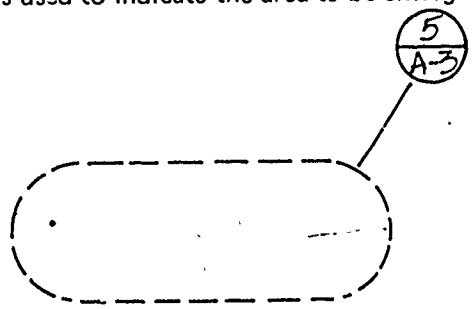

F. Plan grid

(NOTE: This is a method used to identify columns, piers, and exterior elevations by the points of a compass.)

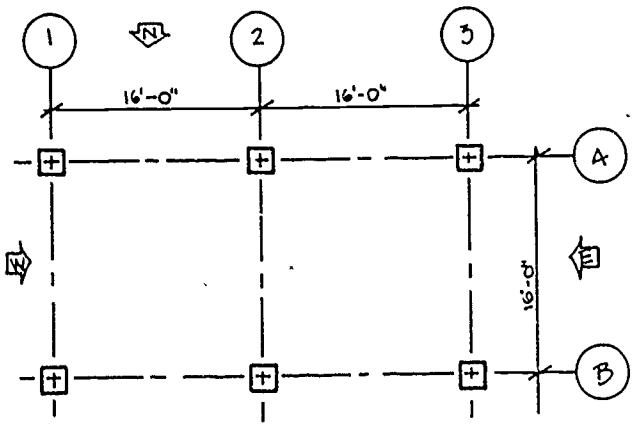

INFORMATION SHEET

G. Key plan - Match line

(NOTE: These are used for buildings that appear on several sheets to assist the person reading the drawing.)

H. Drawing sheet index

(NOTE: This is shown on plot plan, site plan, or title sheet.)

SHEET INDEX

NO.	TITLE
1	Plot Plan
2	Foundation Plan
3	Floor Plan
4	Elevations
5	Sections
6	Details
7	Plumbing Plan
8	HVAC Plan
9	Electrical Plan

XV. Types of schedules

(NOTE: Although information for door, window, and room finish schedules may be included on drawings in the form of notes, it is better to use schedules to keep plans and elevations uncluttered.)

A. Windows (Transparency 16)

(NOTE: The common headings used are listed below and are placed on the floor plan or a separate sheet.)

1. Symbol: Keying symbol or number, but not the same as door keying symbol

2. Size: Dimensions of the window (unit size or rough opening size)

3. Type: Casement, double hung, or others

4. Manufacturer and catalog number: Taken from the catalog

5. Glazing: Single or double strength, crystal, plate, obscure, or insulating

INFORMATION SHEET

6. Material: Wood, steel, aluminum

7. Remarks: Any further description

B. Doors (Transparency 17)

(NOTE: The common headings used are listed here and are placed on the floor plan or a separate sheet.)

1. Symbol: Keying symbol

2. Size: Dimensions of the door

3. Thickness: Front to back

4. Type: Panel, flush, or others

5. Manufacturer and catalog number: Taken from the catalog if required

6. Material: Wood, steel, aluminum, plastic

7. Finish: Varnish, paint, lacquer, or others

8. Jamb: Wood, steel

9. Remarks: Any further description

C. Room-finish (Transparency 18)

(NOTE: The common headings used are listed here and are placed on the floor plan or a separate sheet.)

1. Room: Name of the room

2. Floor: Hardwood, concrete, carpet, various tiles

3. Base: Size and material

4. Walls: North, east, south, and west; gypsum board, plaster, or others

5. Ceiling: Plaster, open beam, suspended, acoustic tile, or others, and height

6. Materials

7. Paint and finish

(NOTE: Wainscot, cabinets and doors, and trim may also be included.)

INFORMATION SHEET

D. Electrical

(NOTE: This is commonly used for commercial buildings.)

E. Plumbing

(NOTE: This is commonly used for commercial buildings.)

F. Footing, column, or beam

(NOTE: This is commonly used for commercial buildings.)

Information on a Title Block

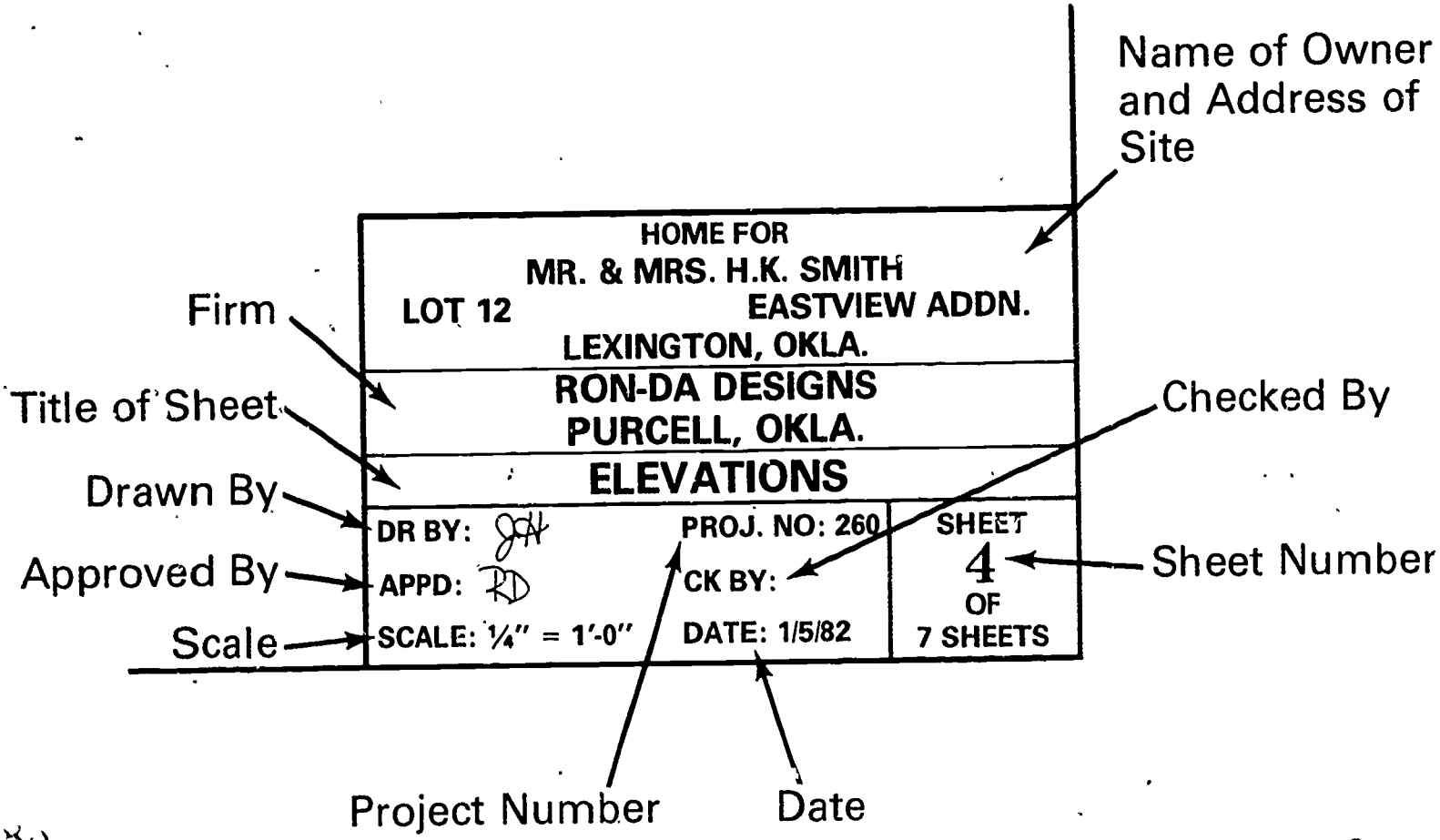

280

280

TM

AD-351

Title Sheet

A RESIDENCE FOR:

MR. & MRS. J.W. HORRIS

109 BASE ST. HUNTER, OKLA. 74640-0132

INDEX

Set of Working Drawings

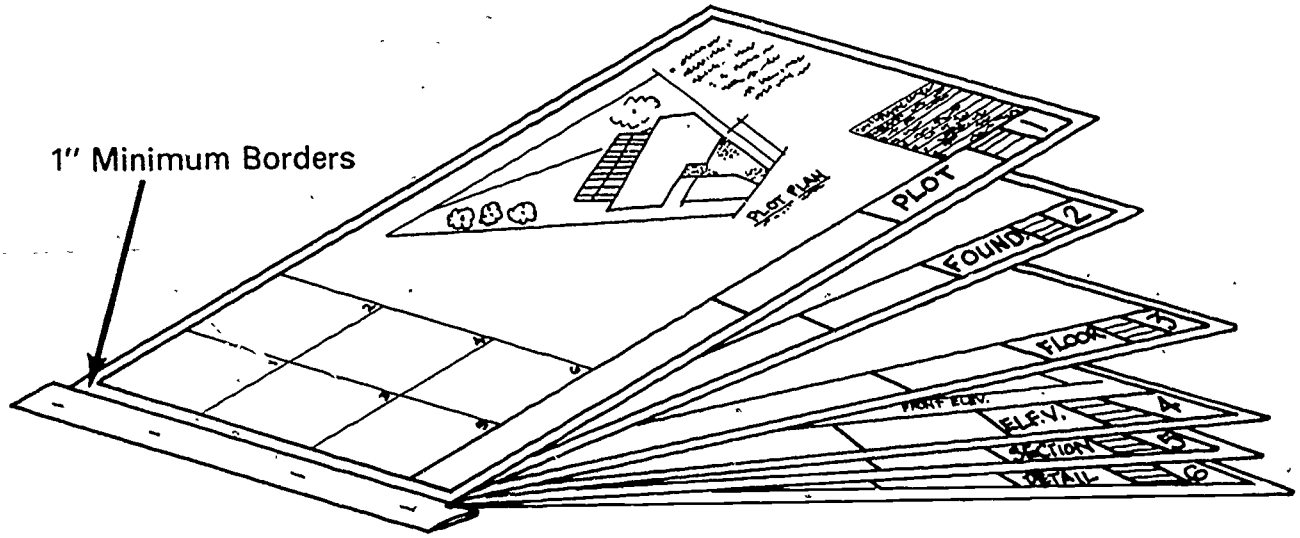

Set of Drawings

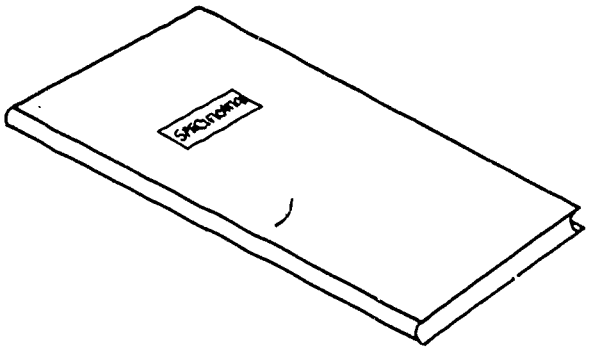

Specifications

Door Plan Symbols

Interior Doors

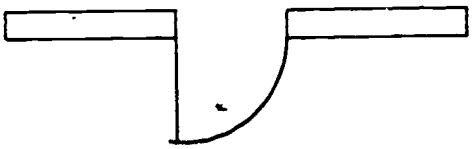

Flush or Panel (Shown 90°)

Flush or Panel (Shown 45°)

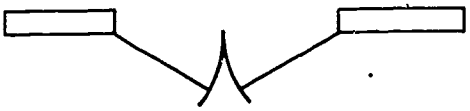

French

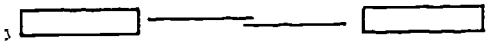

Sliding

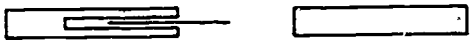

Pocket

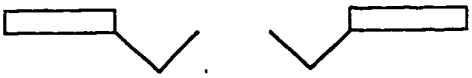

Bi-Fold

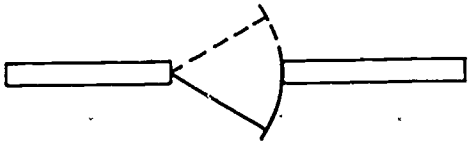

Double Action

Accordion

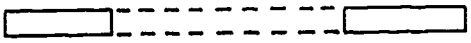

Archway or Cased Opening

Exterior Doors

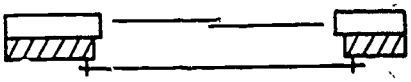

Sliding (in Brick Veneer Wall)

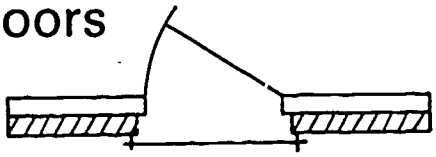

Hinged (In Brick Veneer Wall)

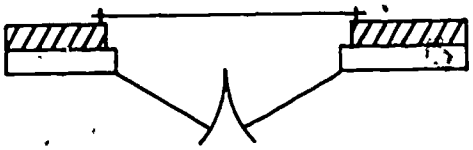

French

Window Plan Symbols

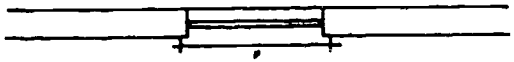

Double Hung (in Frame Wall)

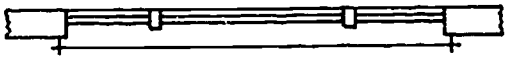

Fixed with
Double Hung Side Lights

Double Casement

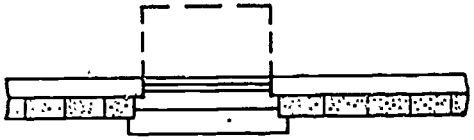

Hopper (in Cut Stone Veneer)

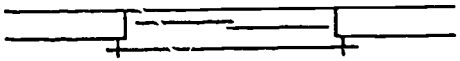

Sliding

Awning

Plan Symbols

Bathroom Fixtures

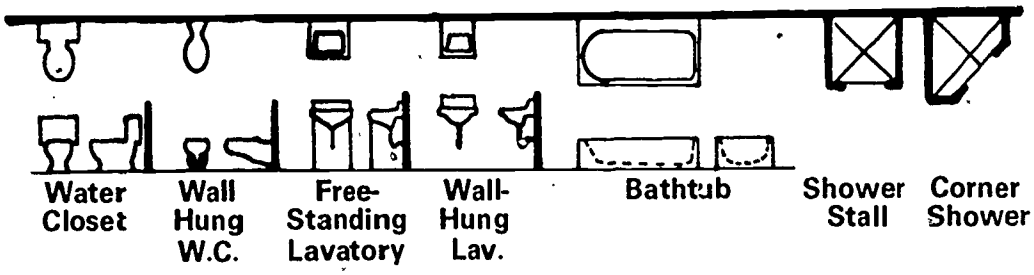

Kitchen and Laundry Fixtures

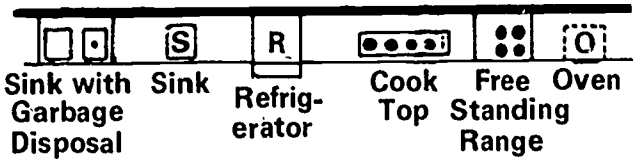

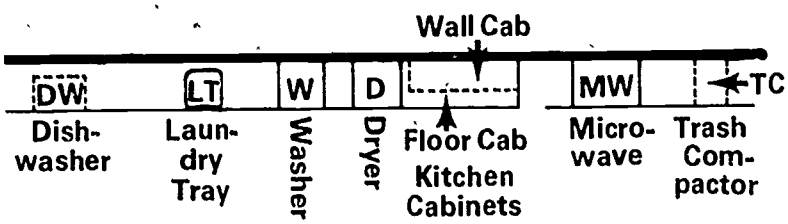

Built-In Components

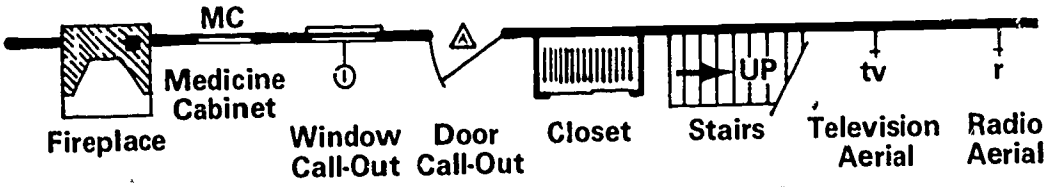

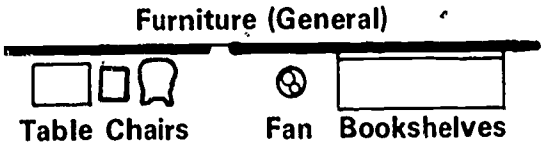

Door Elevation Symbols

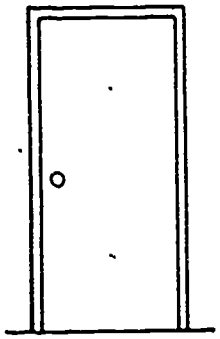

Flush

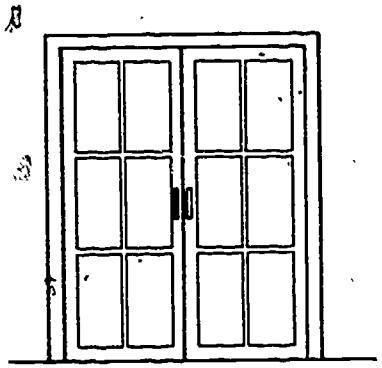

French

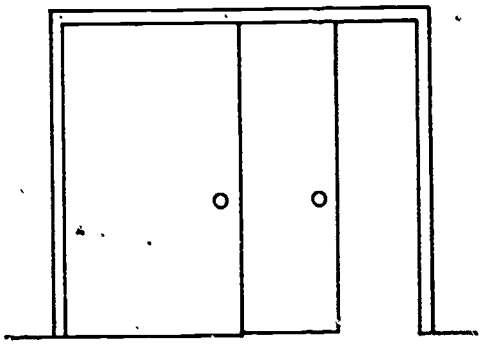

Sliding

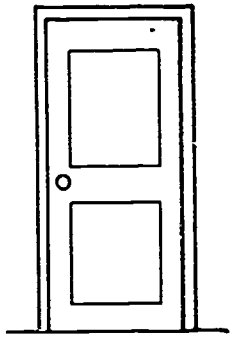

Panel

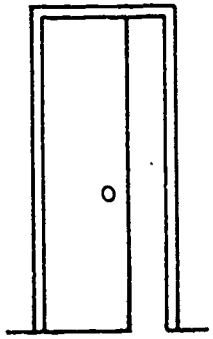

Pocket

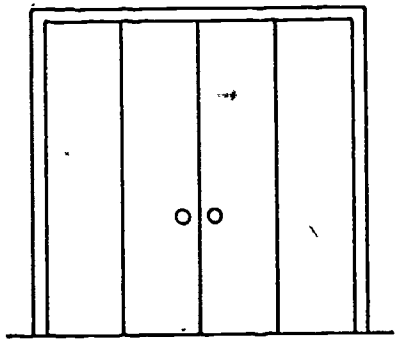

Bi-Fold

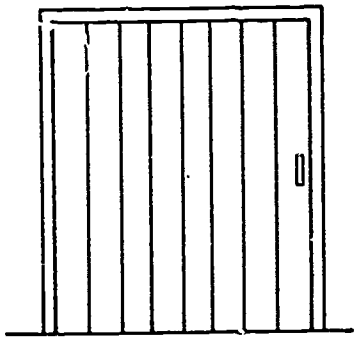

Accordion

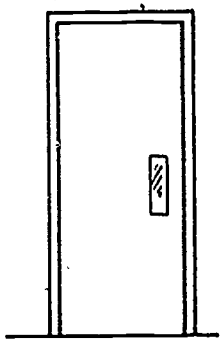

Double Action

Window Elevation Symbols

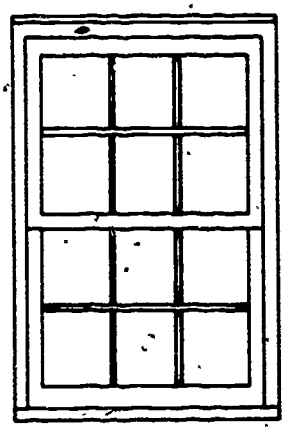

Double Hung

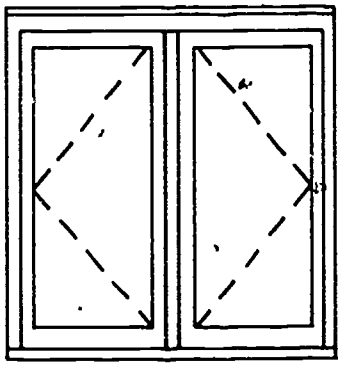

Double Casement

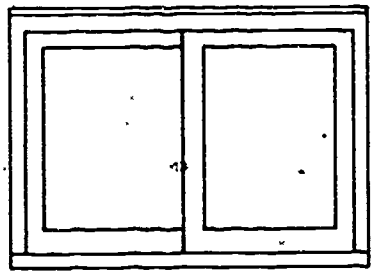

Sliding

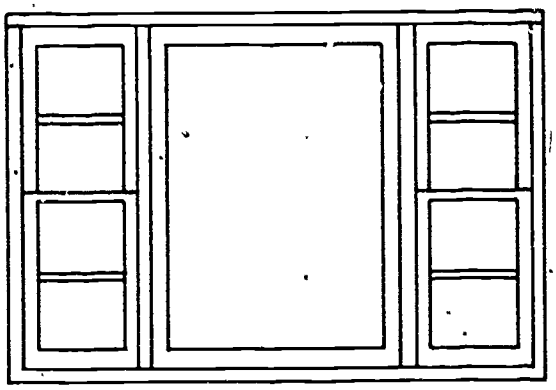

Fixed with
Double Hung Side Lights

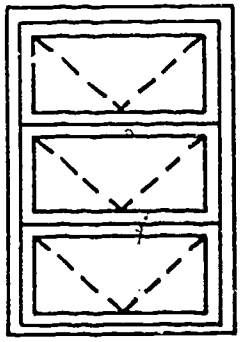

Hopper

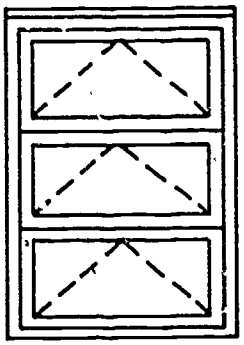

Awning

Ways Different Roofs Affect Elevation Appearance

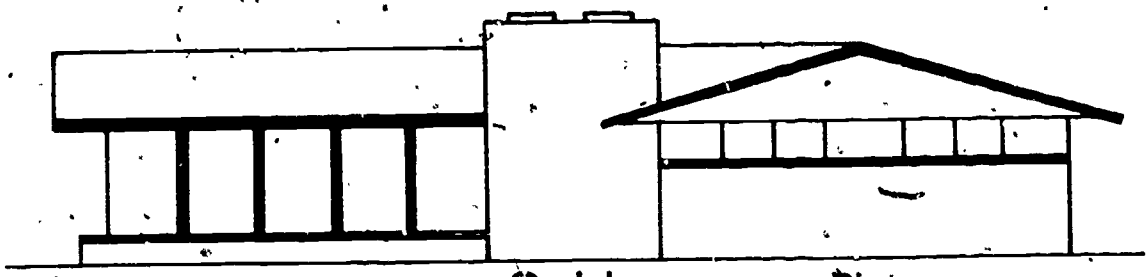

Gable

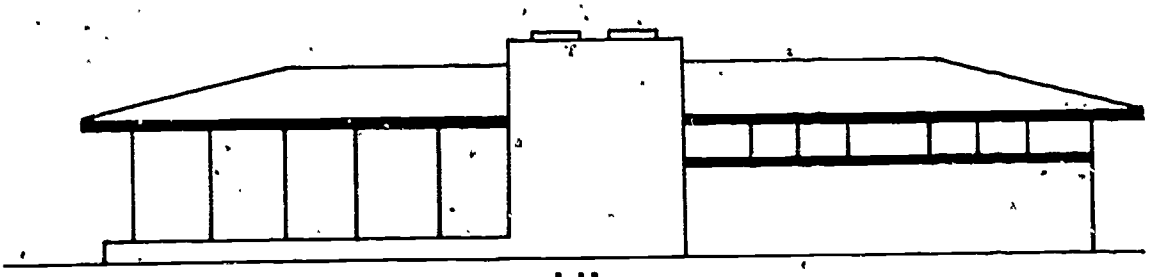

Hip

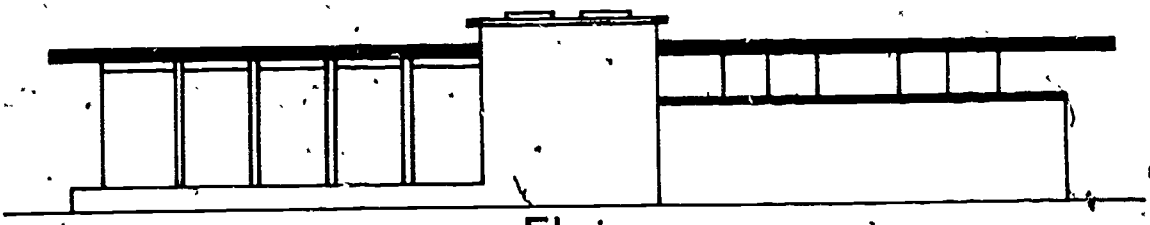

Flat

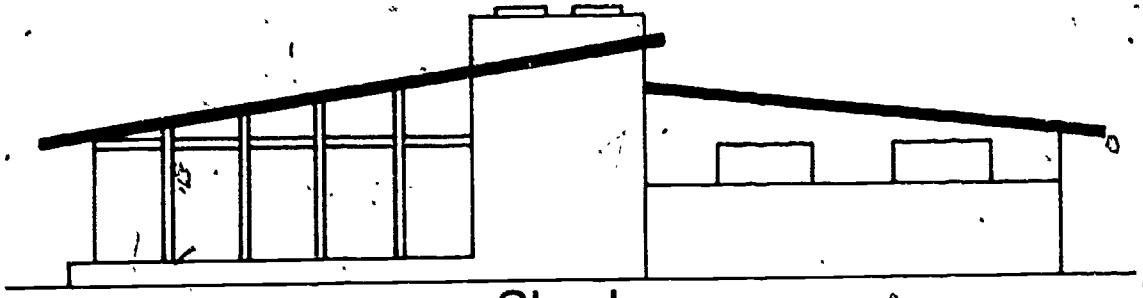

Shed

Factors Which Affect Elevation Appearance

Use of Building Lines

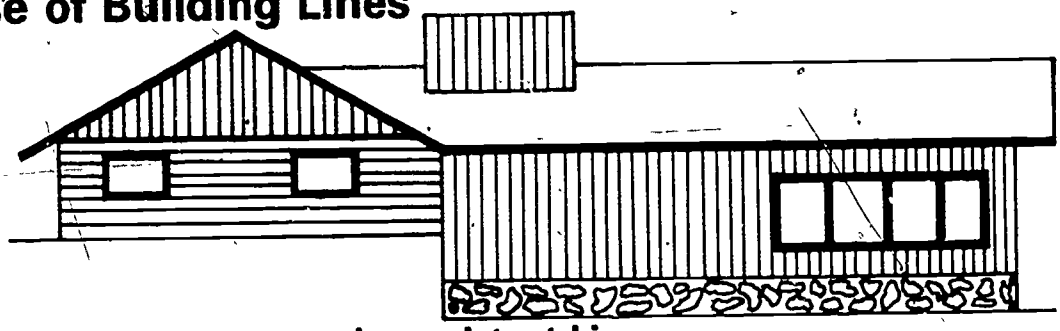

Inconsistent Lines

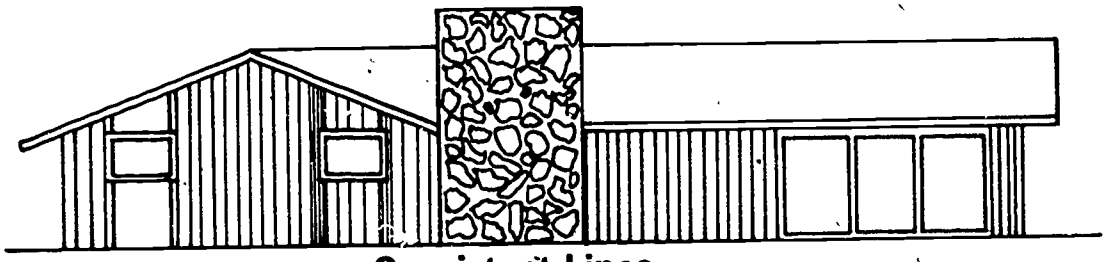

Consistent Lines

Relationship of Windows and Chimney to Building Lines

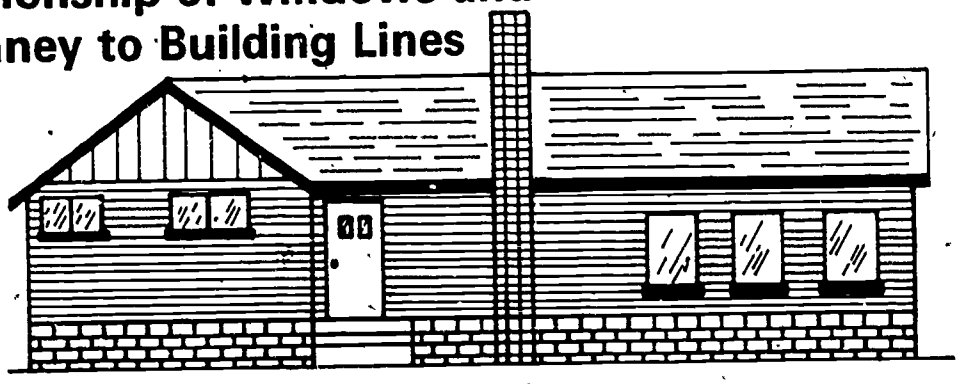

Unrelated

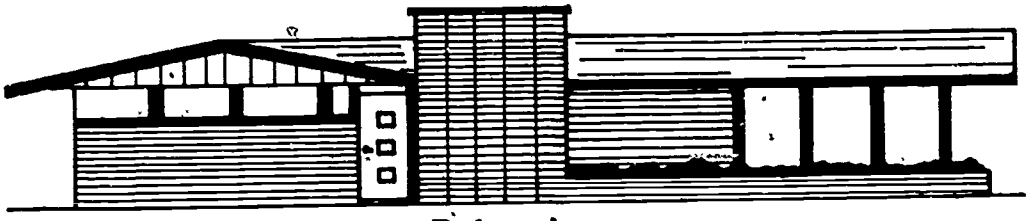

Related

Projecting an Elevation

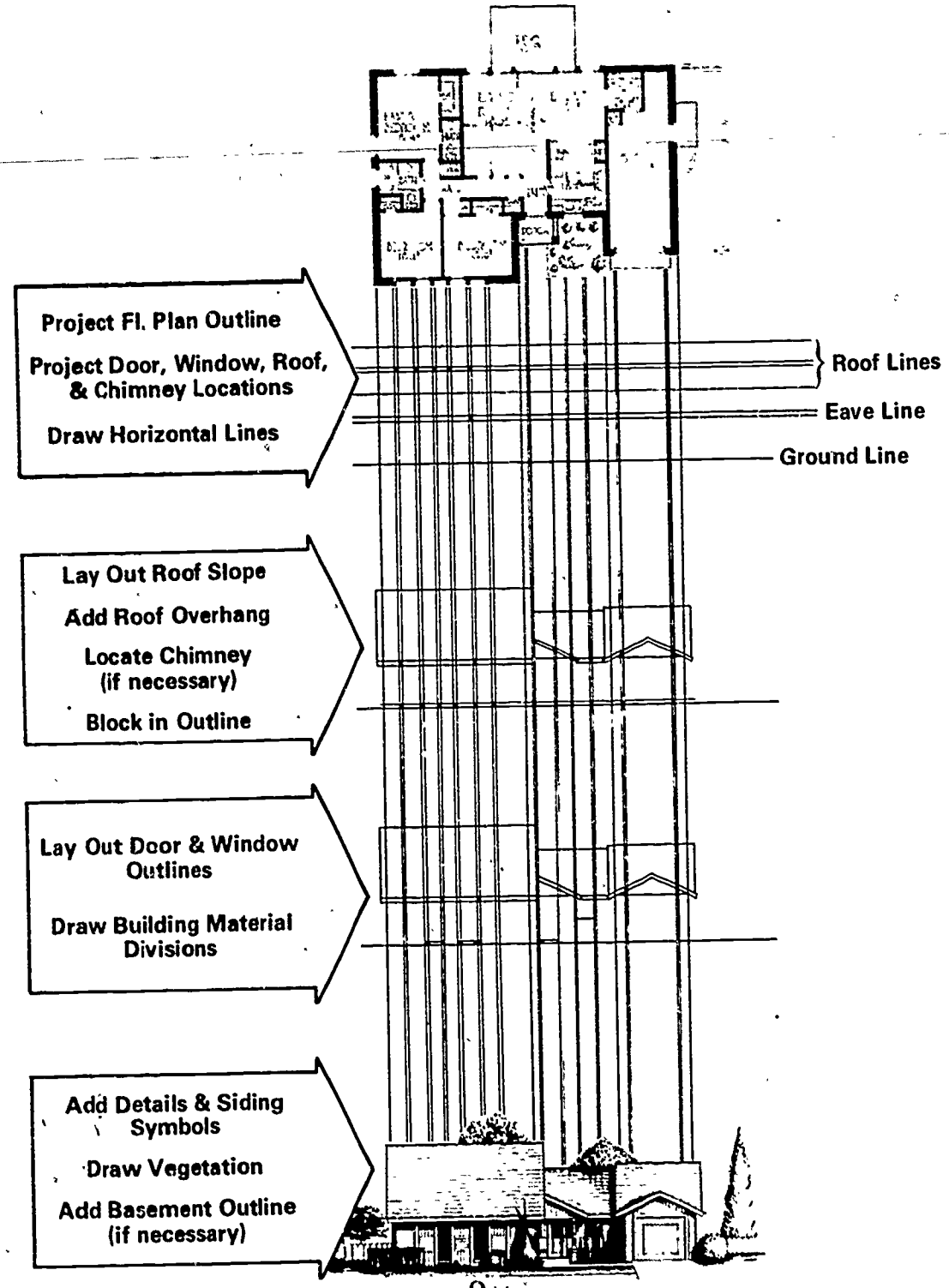

Reference Methods

Parts of a Typical Symbol

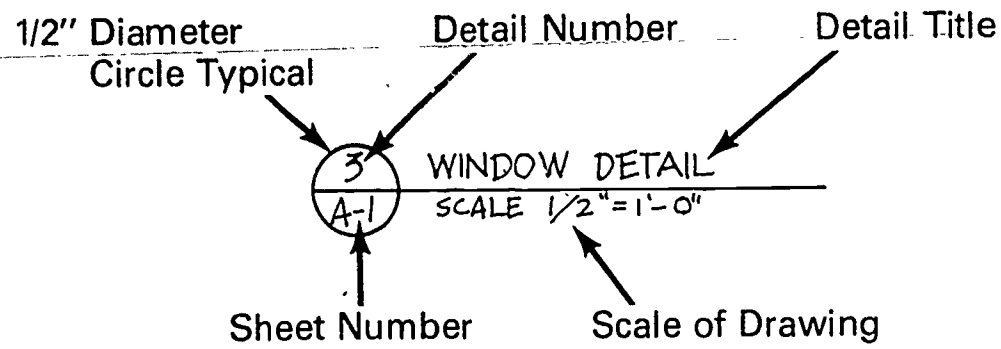

Elevations and Floor Plans

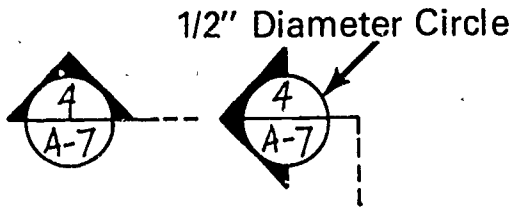

Floor Elevations

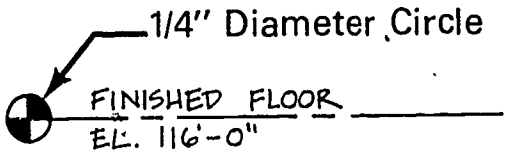

Cutting Plane Line, Arrows, and Typical Symbols

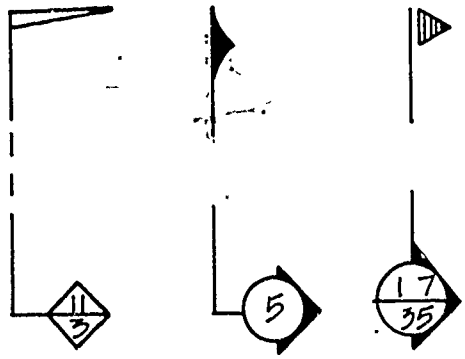

Use of Reference Methods

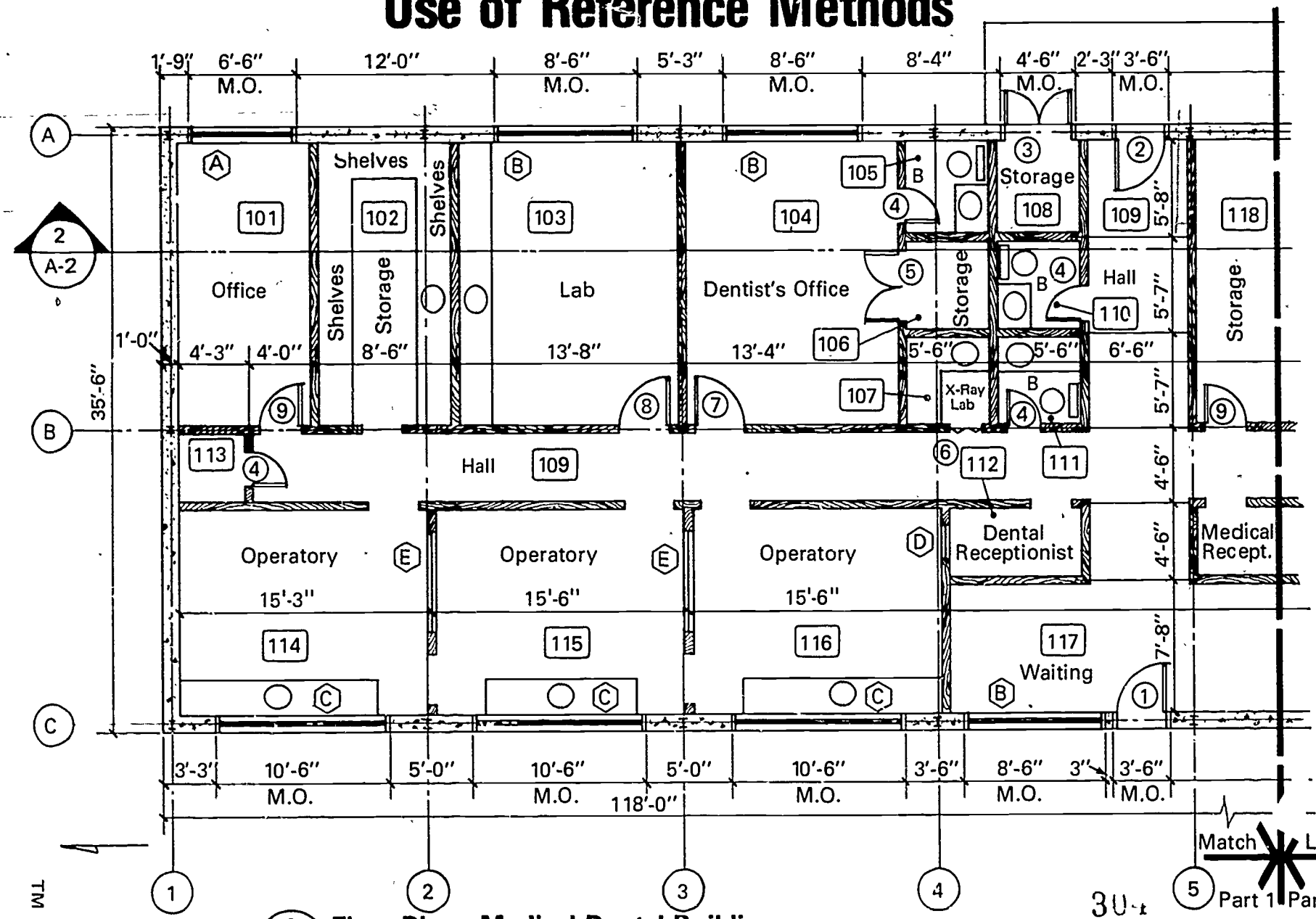

1 / A-1 Floor Plan - Medical Dental Building
Scale: 1/8" = 1'-0"

AD-375

TM 1

303

304

Use of Reference Methods

(Continued)

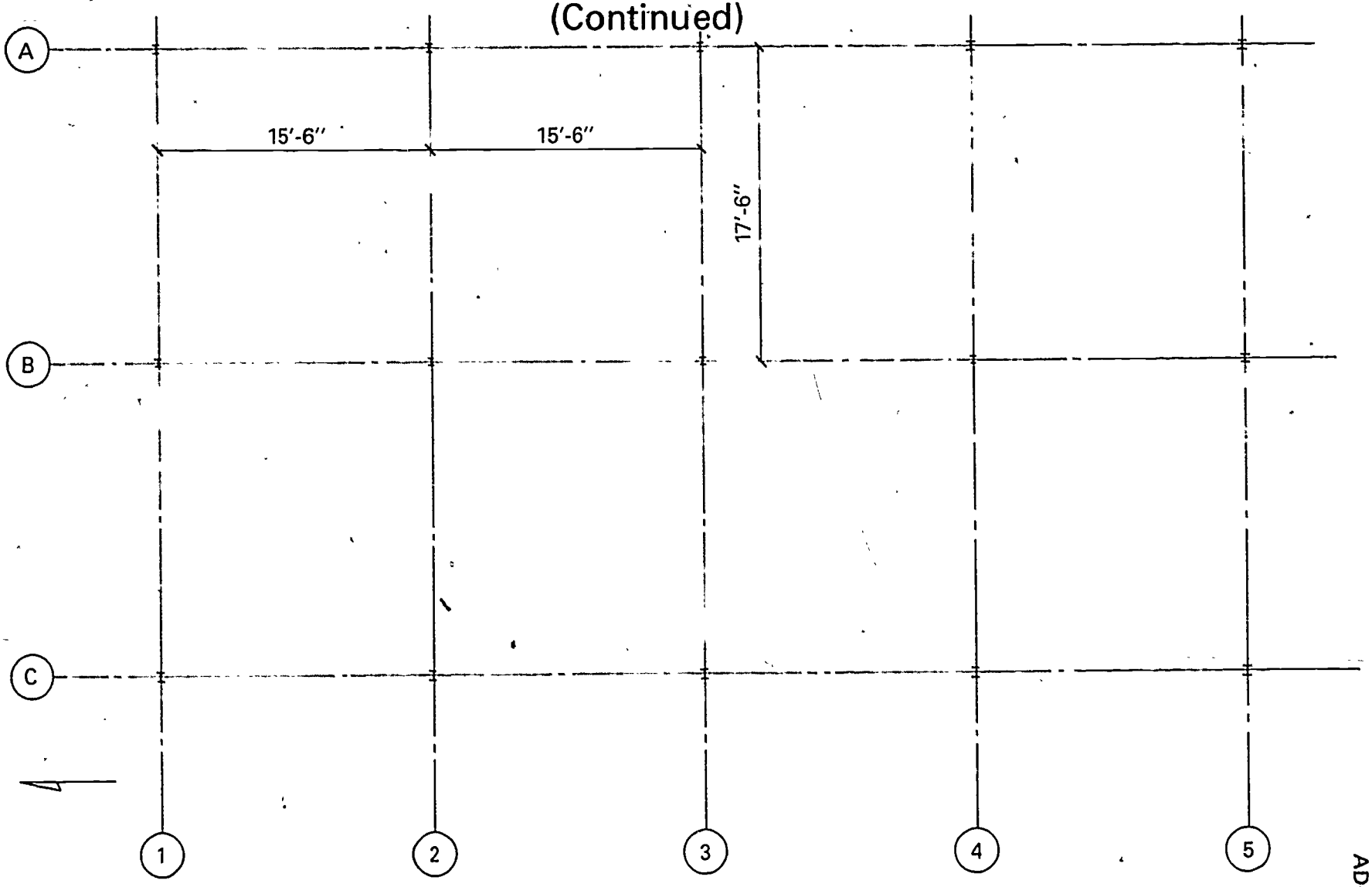

Note: Exterior Elevations are Noted by Points of Compass. This TM Corresponds to TM13.)

Plan Grid

Use of Reference Methods
(Continued)

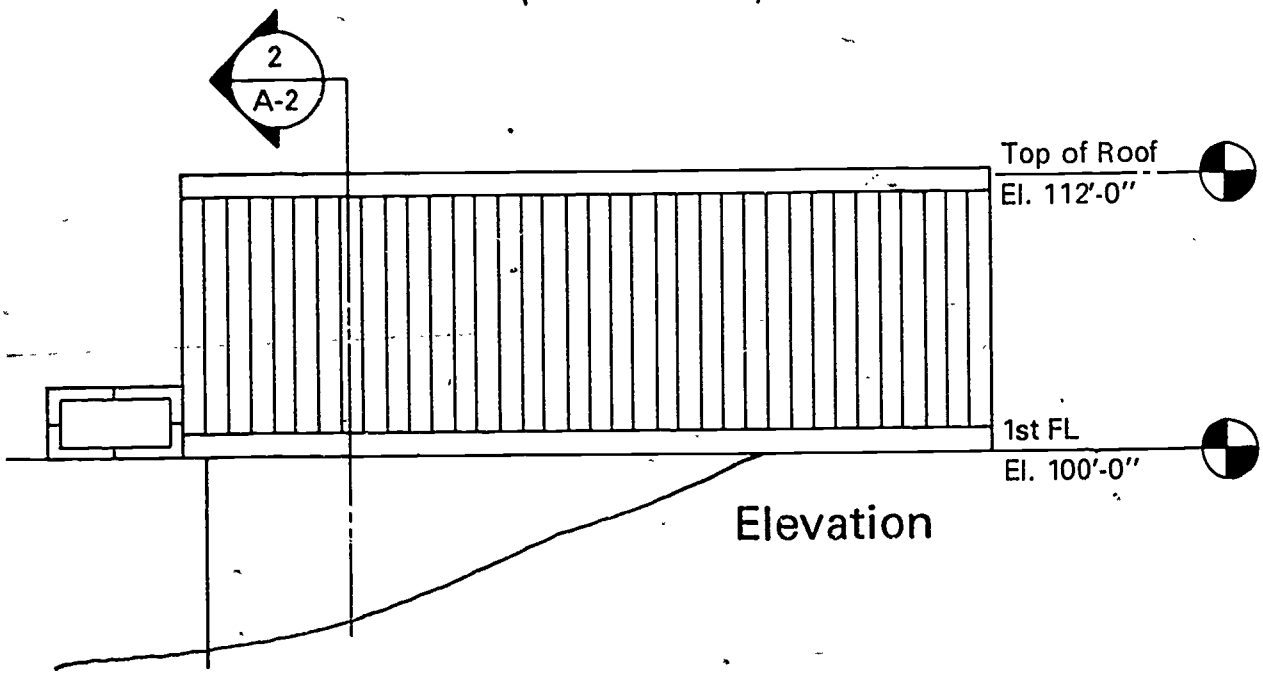

Elevation

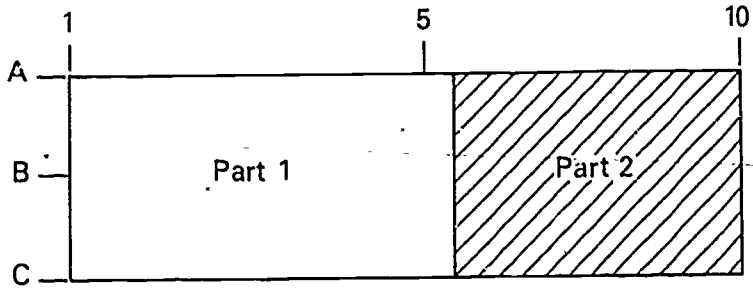

Key Plan

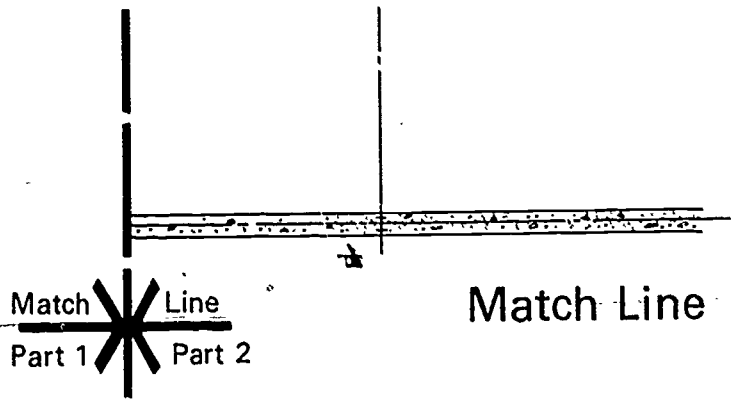

Match Line

(NOTE: This TM Corresponds to TMs 13 and 14.)

Window Schedule

Sym	Size	Type	Mfgr & Catalog No.	Remarks	Glass
A	6'-0" x 4'-0"	Fixed	"E-Z set" 7248C	Alum w/ Plastic screens	Thermopane
B	8'-0" x 4'-0"	D.O.	D.O. 9648C	D.O.	D.O.
C	10'-0" x 3'-0"	D.O.	D.O. 12036C	D.O.	D.O.
D	2'-0" x 4'-0"	D.O.	D.O. 2448M	Wood Trim	1/4" P.P.
E	6'-0" x 4'-0"	D.O.	D.O. 7248M	D.O.	D.O.
F	7'-0" x 4'-0"	D.O.	D.O. 8448C	Alum w/ Plastic screens	Thermopane
G	6'-0" x 3'-0"	D.O.	D.O. 7236C		D.O.

(NOTE: This TM corresponds to TMs 13-15.)

Door Schedule

Sym	Size	Mfgr & Catalog No.		Remarks	Material	THK	Type
①	3'-0" x 6'-8"	Phillips	Housemart	3 Coats Ext trim paint	Metal	1 3/4"	Solid
②	3'-0" x 6'-8"	D.O.	M-1 M-5	D.O.	D.O.	D.O.	D.O.
③	2'-0" x 6'-8"	D.O.	M-91	D.O.	D.O.	D.O.	D.O.
④	2'-0" x 6'-8"	D.O.	A-4	Stain & Lacq. Finish	Birch	1 3/8"	Hollow Core
⑤	2'-0" x 6'-8"	D.O.	A-10	D.O.	D.O.	D.O.	D.O.
⑥	2'-0" x 6'-8"	D.O.	B-17	D.O.	Pine	D.O.	Bifold
⑦	3'-0" x 6'-8"	D.O.	A-5	D.O.	Birch	D.O.	Solid Core
⑧	3'-0" x 6'-8"	D.O.	A-17	D.O.	D.O.	D.O.	Hollow Core
⑨	2'-6" x 6'-8"	D.O.	A-21	D.O.	D.O.	D.O.	D.O.
⑩	2'-10" x 6'-8"	D.O.	D-7	D.O.	D.O.	D.O.	D.O.
⑪	2'-6" x 6'-8"	D.O.	D-4	D.O.	D.O.	D.O.	D.O.

(NOTE: This TM corresponds to TMs 13-16.)

Room Finish Schedule

Mark No.	Room	Floor M	Floor F	Base M	Base F	Walls N M	Walls N F	Walls E M	Walls E F	Walls S M	Walls S F	Walls W M	Walls W F	Ceiling M	Ceiling F	Ceiling Ht.
101	Office	1	A	4	D	6	C	6	C	7	C	7	C	7	D	8'-0"
102	Storage	2	A	4	E	7	D	6	D	7	D	7	D	7	D	8'-0"
103	Lab	5	A	4	E	7	D	6	D	7	D	7	D	7	D	8'-0"
104	Dentist's Office.	1	A	4	F	8	F	6	A	8	F	8	F	7	H	8'-0"
105	Bath - Dentist	3	A	4	F	7	B	6	B	7	B	7	B	7	H	8'-0"
106	Storage	1	A	4	E	7	D	7	D	7	D	7	D	7	D	8'-0"
107	X-Ray Lab	2	A	5	A	7	D	7	D	7	D	7	D	7	A	8'-0"
108	Storage	6	A	4	E	7	A	6	A	7	A	7	A	7	A	Varies
109	Hall	1	A	5	A	7	D	7	D	7	D	7	D	7	H	7'-0"
110	Bath - Men	3	A	5	A	7	C	7	C	7	C	7	C	7	D	8'-0"
111	Bath - Women	3	A	5	A	7	C	7	C	7	C	7	C	7	D	8'-0"
112	Dental Recept.	2	A	5	A	7	C	7	C	7	C	7	C	7	H	7'-0"
113	Storage	2	A	5	A	6	A	7	A	7	A	7	A	7	A	Varies
114	Operatory	2	A	5	A	6	D	7	D	7	D	6	D	7	H	8'-0"
115	Operatory	2	A	5	A	7	D	7	D	7	D	6	D	7	H	8'-0"
116	Operatory	2	A	5	A	7	D	7	D	7	D	6	D	7	H	8'-0"
117	Waiting	1	A	4	F	8	A	8	A	8	A	6	C	7	H	Varies
118	Storage	2	A	5	A	7	E	6	E	7	E	7	E	7	D	8'-0"
119	Lab	2	A	4	E	7	D	6	D	7	D	7	D	7	D	8'-0"

Materials	Paint & Finish
1. Carpet (NIC)	A. Non Req'd.
2. Vinyl Sheet	B. Wall Paper (NIC)
3. Ceramic Tile	C. Vinyl Wall Covering (NIC)
4. Wood Base	D. Semi-Gloss Enamel
5. Vinyl Base	E. Flat Wall Latex
6. Concrete-Bare	F. Stain/Varnish
7. Gypsum Walled	G. Semi-Transp. Stain
8. Wood Paneling	H. Accoustical Texture

(NIC) = Not in Contract
M = Material
F = Finish

(NOTE: This TM corresponds to TMs 13-17.)

INTRODUCTION TO WORKING DRAWINGS
UNIT VI

ASSIGNMENT SHEET #1--SKETCH A FLOOR PLAN OF YOUR HOUSE

Directions: Measure the rooms in your house. On grid paper sketch a floor plan of your house. Use the scale 1/4" = 1'-0" or 1/8" = 1'-0".

INTRODUCTION TO WORKING DRAWINGS
UNIT VI

ASSIGNMENT SHEET #2--DRAW A FLOOR PLAN FROM A PRELIMINARY SKETCH

Directions: Draw a floor plan using the preliminary sketch your made for Assignment Sheet #7 of Unit IV, "Residential Design." Use the appropriate floor plan symbols covered in this unit.

INTRODUCTION TO WORKING DRAWINGS
UNIT VI

ASSIGNMENT SHEET #3--SKETCH DIFFERENT ROOFS ON AN ELEVATION

Directions: Since the type of roof greatly affects the appearance of an elevation, make four sketches of the following house and add one of the basic roof types to each sketch.

A. Hip

B. Shed

C. Flat

D. Gable

INTRODUCTION TO WORKING DRAWINGS
UNIT VI

ASSIGNMENT SHEET #4--RESKETCH AN ELEVATION TO ELIMINATE THE INCONSISTENT USE OF MATERIALS

Directions: Too many materials are used on the following building. Sketch an elevation of this house and change the building materials to be consistent with the design.

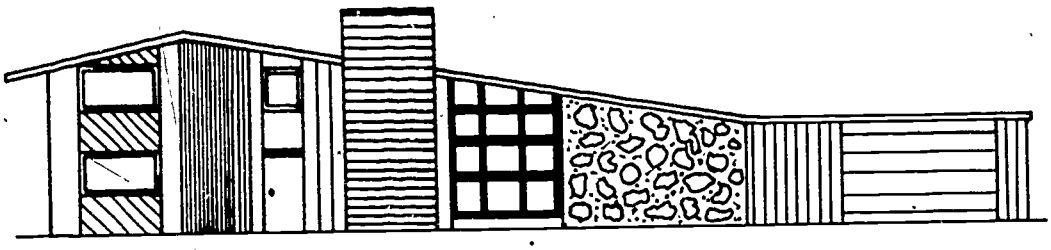

INTRODUCTION TO WORKING DRAWINGS
UNIT VI

ASSIGNMENT SHEET #5--SKETCH TWO DIFFERENT ELEVATIONS OF THE SAME FLOOR PLAN

Directions: Sketch two different elevations of the following floor plan. Different types of roofs or exterior material are easy ways to change the appearance of a house.

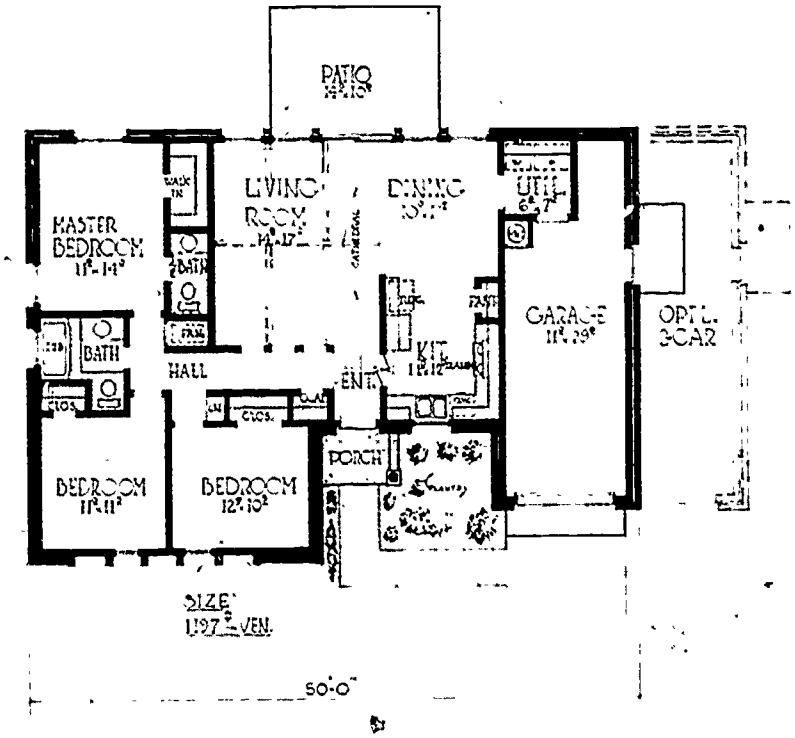

INTRODUCTION TO WORKING DRAWINGS
UNIT VI

ASSIGNMENT SHEET #6--DRAW A FRONT AND SIDE ELEVATION

Directions: Draw a front and side elevation using the floor plan you drew in Assignment Sheet #2.

INTRODUCTION TO WORKING DRAWINGS
UNIT VI

ASSIGNMENT SHEET #7--DRAW A FRONT ELEVATION ON AN UNEVEN TERRAIN

Directions: Draw a front elevation of the following floor plan. The house will be situated on the uneven terrain as shown.

(NOTE: Instructor will supply the appropriate scale.)

SCALE: 1/32"=1'-0"

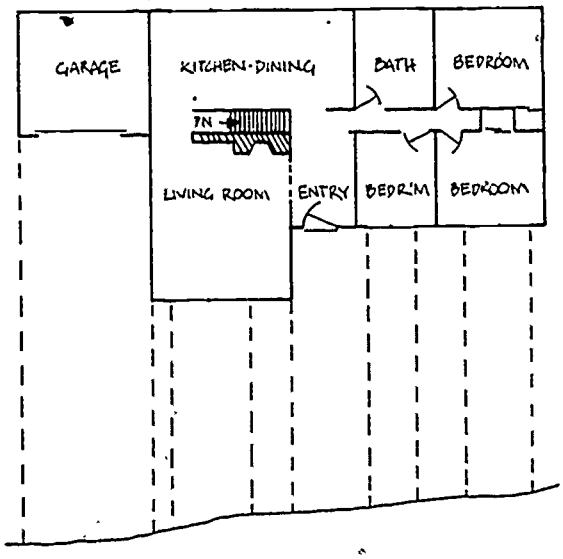

INTRODUCTION TO WORKING DRAWINGS
UNIT VI

ASSIGNMENT SHEET #8--COMPLETE A DOOR AND WINDOW SCHEDULE

Directions: Complete a door and window schedule for the floor plan that you drew in Assignment Sheet #2. Use the following guidelines to complete this assignment sheet. Refer to Transparencies 16 and 17 for examples.

Guidelines:

A. Select and place a mark symbol by each door and window on the floor plan

B. Use a numeral for doors and a letter for windows

C. Use the same numeral or letter for the same sizes or types of doors and windows

D. Use a different numeral or letter for different sizes or types of doors and windows

E. Refer to *Sweet's Catalog File* or a product catalog for door and window sizes, types, catalog numbers, materials, and glazing

F. Fill in door and window schedule with corresponding mark symbol and information from catalogs

INTRODUCTION TO WORKING DRAWINGS
UNIT VI

NAME _____

TEST

1. Match the terms on the right with the correct definitions.

_____a. Any drawing used to give information for the manufacture or construction of a structure

_____b. All the information needed by a builder to complete a building exactly as intended by the designer or architect

_____c. Located in lower right hand corner of drawing sheet to identify the firm, address, title, drafter, date, project number, and sheet number

_____d. Keying symbol system used to locate information and refer from one drawing sheet to another

_____e. Organized information in tabular form which gives detailed information about such items as doors or windows

_____f. Used to match portions of a building that appear on several drawing sheets

_____g. Identifies each unit area of a building and the cross hatched unit indicates the area which appears on the drawing sheet

_____h. An explanatory list of the symbols used on a drawing or set of drawings

_____i. A wall with some type of masonry face which is attached to, but not so bound to the body of the wall as to exert a common reaction under load

_____j. Facing for the lower part of an interior wall which is finished differently from the remainder of the wall

_____k. Relationship between rise and run showing slant of roof

_____l. Vertical distance covered by a roof

_____m. Horizontal distance covered by a roof

1. Key plan
2. Title block
3. Match lines
4. Working drawing
5. Rise
6. Legend
7. Reference symbols
8. Veneered wall
9. Slope
10. Set of working drawings
11. Run
12. Schedules
13. Wainscot

2. Identify information on a title block.

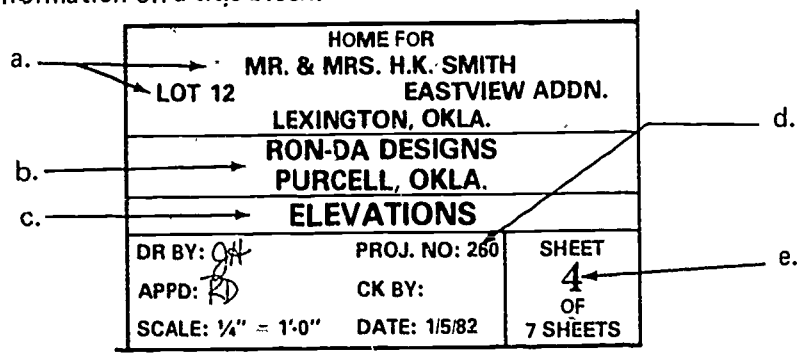

a. _____ b. _____

c. _____ d. _____

e. _____

3. Complete the following list of methods for placing the title block on a drawing.

a. _____

b. _____

c. Rubber stamp

d. Hand drawn

4. Select information on a title sheet, cover sheet, or index by placing an "X" in the appropriate blanks.

_____a. Project name and address

_____b. All specifications

_____c. Numerically listed index of drawings in the set of working drawings

5. Match common U.S. scales on the right used with the correct parts of a set of working drawings.

_____a. Foundation plan	1. 1" = 20' or 40'
_____b. Construction details	2. 1/8" or 1/4" = 1'-0"
_____c. Plot plan	3. 3/4" to 1 1/2" = 1'-0"
_____d. Interior elevations	4. 3/8" to 1/2" = 1'-0"
_____e. Elevations	
_____f. Floor plan	
_____g. Wall section details	

6. Arrange in order a set of residential working drawings by placing the correct sequence numbers in the appropriate blanks.

_____a. HVAC plan

_____b. Foundation plan

_____c. Interior elevations and details

_____d. Floor plan

_____e. Plumbing

_____f. Sections

_____g. Elevations

_____h. Plot or site plan

_____i. Electrical plan

7. Complete the following chart of abbreviations.

AO	_____	LR	_____
_____	Concrete	MATL	_____
_____	Dining room	_____	On center
_____	Finish floor	_____	Solid core
GL	_____	WS	_____
_____	Kitchen		

8. Identify plan symbols of the following doors and windows.

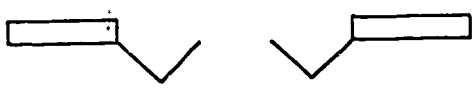

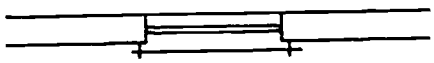

a. _____

b. _____

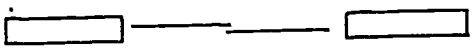

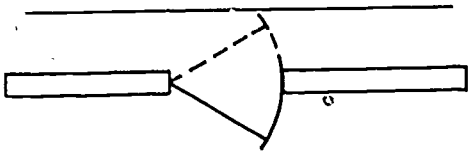

c. _____

d. _____

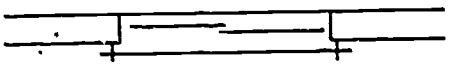

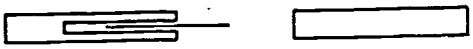

e. _____

f. _____

9. Identify plan symbols of the following bathroom and kitchen fixtures and built-in components.

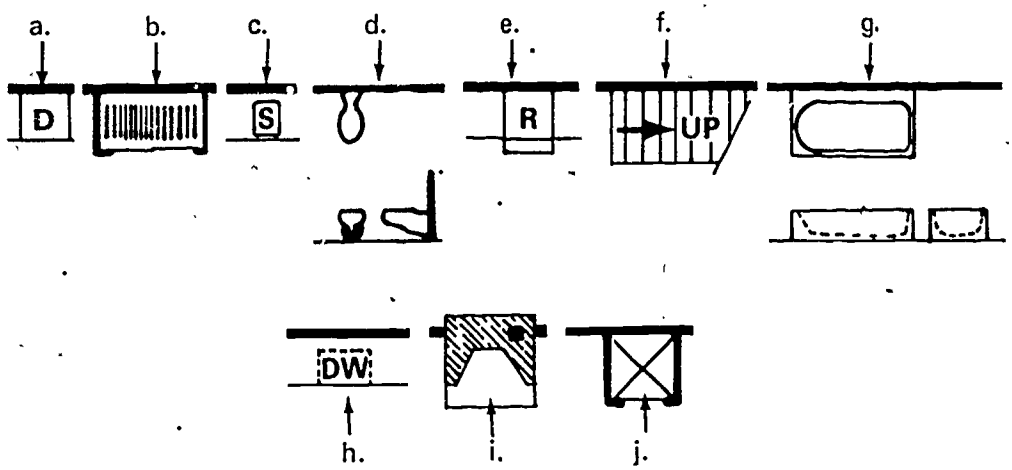

a. _____ b. _____

c. _____ d. _____

e. _____ f. _____

g. _____ h. _____

i. _____ j. _____

10. Identify elevation symbols of the following doors and windows.

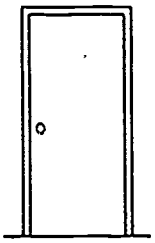

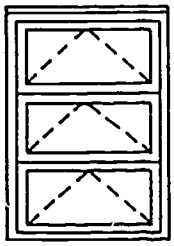

a. _____ b. _____

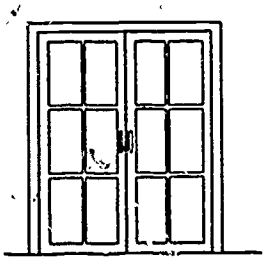

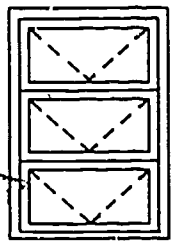

c. _____ d. _____

11. Match the exterior materials on the right with the correct symbols.

1. Glass
2. Rock
3. Horizontal wood siding
4. Wood shingle
5. Stucco
6. Brick
7. Concrete block

_____a. 

_____b. 

_____c. 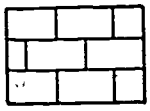

_____d. 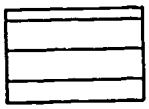

_____e. 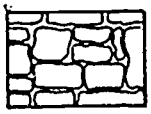

_____f. 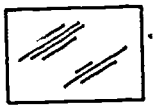

_____g. 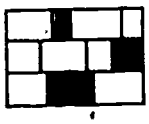

12. Select true statements concerning factors to consider when drawing elevations by placing an "X" in the appropriate blanks.

_____a. Always use formal balance

_____b. Every elevation should have some point of emphasis

_____c. Use at least four types of exterior sidings for variety

_____d. The basic horizontal lines of an elevation are the vanishing lines and property lines

_____e. Sufficient roof overhang is needed to afford protection from sun, rain, and snow

_____f. Type of roof does not affect the appearance of an elevation

_____g. Slope of roof needs to be calculated in order to show the slant of a roof

13. Arrange in order the steps in projecting elevations by placing the correct sequence numbers in the appropriate blanks.

_____a. Lay out door and window outlines, and draw building material divisions

_____b. Add details and siding symbols, draw vegetation, and add basement outline (if used)

_____c. Lay out roof slope, add roof overhang, locate chimney (if used), and block in outline

_____d. Project floor plan outline and door, window, and chimney locations; draw horizontal lines

14. Match reference methods on the right with the correct symbols.

_____a. FINISHED FLOOR EL. 116'-0"

_____b. 3 / A-1 WINDOW DETAIL SCALE 1/2"=1'-0"

_____c. 105 BEDROOM 5 12

1. Feature
2. Floor plan and elevation.
3. Floor elevation

_____d.

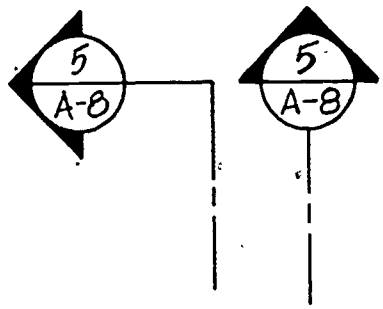

4. Plan grid
5. Drawing sheet index
6. Schedules
7. Section details, exterior, or interior elevations

_____e.

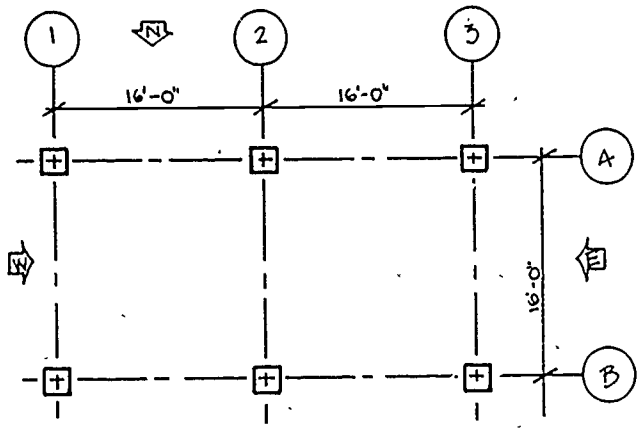

_____f.

NO.	TITLE
1	Plot Plan
2	Foundation Plan
3	Floor Plan
4	Elevations
5	Sections
6	Details
7	Plumbing Plan
8	HVAC Plan
9	Electrical Plan

_____g.

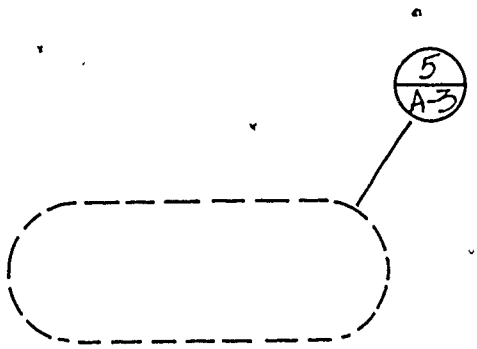

15. List three types of schedules.

    a. _____

    b. _____

    c. _____

16. Demonstrate the ability to:

    a. Sketch a floor plan of your house.

    b. Draw a floor plan from a preliminary sketch.

    c. Sketch different roofs on an elevation.

    d. Resketch an elevation to eliminate the inconsistent use of materials.

    e. Sketch two different elevations of the same floor plan.

    f. Draw a front and side elevation.

    g. Draw a front elevation on an uneven terrain.

    h. Complete a door and window schedule.

    (NOTE: If these activities have not been accomplished prior to the test, ask your instructor when they should be completed.)

INTRODUCTION TO WORKING DRAWINGS
UNIT VI

ANSWERS TO TEST

1. a. 4
   b. 10
   c. 2
   d. 7
   e. 12
   f. 3
   g. 1
   h. 6
   i. 8
   j. 13
   k. 9
   l. 5
   m. 11

2. a. Name of owner and address of site
   b. Firm or name of school
   c. Title of sheet
   d. Project or job number
   e. Sheet number

3. a. Commercially printed on vellum or film
   b. Plastic film appliques

4. a, c

5. a. 2
   b. 3
   c. 1
   d. 4
   e. 2
   f. 2
   g. 3

6. a. 8
   b. 2
   c. 6
   d. 3
   e. 9
   f. 5
   g. 4
   h. 1
   i. 7

7. AO — Arched opening
   CONC — Concrete
   DR — Dining room
   FIN FL — Finish floor
   GL — Glass
   K — Kitchen
   LR — Living room
   MATL — Material
   OC — On center
   SC — Solid core
   WS — Weather stripping

8. a. Bi-fold door
   b. Double hung window
   c. Sliding door
   d. Double action door
   e. Sliding window
   f. Pocket door

9. a. Dryer
   b. Closet
   c. Sink
   d. Wall-hung water closet
   e. Refrigerator
   f. Stairs
   g. Bathtub
   h. Dishwasher
   i. Fireplace
   j. Shower

10. a. Flush door
    b. Awning window
    c. French doors
    d. Hopper window

11. a. 6
    b. 5
    c. 7
    d. 3
    e. 2
    f. 1
    g. 4

12. b, e, g

13. a. 3
    b. 4
    c. 2
    d. 1

14. a. 3
    b. 7
    c. 6
    d. 2
    e. 4
    f. 5
    g. 1

15. Any three of the following:
    a. Windows
    b. Doors
    c. Room-finish
    d. Electrical
    e. Plumbing
    f. Footing, column, or beam

16. Evaluated to the satisfaction of the instructor

DIMENSIONING
UNIT VII

UNIT OBJECTIVE

After completion of this unit, the student should be able to distinguish between the correct and incorrect use of dimensioning and select true statements concerning dimensioning. The student should also be able to dimension a floor plan and elevation, prepare a floor plan according to a modular system, and dimension a detail using metric system. This knowledge will be evidenced by correctly performing the procedures outlined in the assignment sheets and by scoring 85 percent on the unit test.

SPECIFIC OBJECTIVES

After completion of this unit, the student should be able to:

1. Match terms related to dimensioning with the correct definitions.
2. Select the line technique at corners which is most used.
3. Distinguish between the correct and incorrect uses of dimensioning.
4. Complete a chart for drawing wall thicknesses.
5. Select true statements concerning general dimensioning rules.
6. Select true statements concerning floor, foundation, and basement plan dimensioning.
7. Select true statements concerning site and plot plan dimensioning.
8. Select true statements concerning elevation dimensioning.
9. Select true statements concerning detail and wall section dimensioning.
10. Select true statements concerning HVAC plan dimensioning.
11. Select true statements concerning plumbing plan dimensioning.
12. List advantages of the modular system.
13. Select true statements concerning modular dimensioning.
14. Select true statements concerning metric dimensioning.
15. Complete a chart of dimensioning abbreviations.

16. Demonstrate the ability to:

    a. Identify dimensioning errors.

    b. Dimension a floor plan.

    c. Dimension an elevation.

    d. Prepare and dimension a floor plan according to a modular system.

    e. Dimension a detail using metric system (optional).

DIMENSIONING
UNIT VII

SUGGESTED ACTIVITIES

I. Provide student with objective sheet.

II. Provide student with information and assignment sheets.

III. Make transparencies.

IV. Discuss unit and specific objectives.

V. Discuss information and assignment sheets.

VI. Discuss the various methods of dimensioning.

VII. Provide a set of residential working drawings as a reference for students.

VIII. Take a field trip to a local lumber company to determine what lumber is available in metric sizes.

IX. Provide 8 x 8 fade-out gridded vellum for use in Assignment Sheet #4.

X. Provide metric equivalent charts for use in Assignment Sheet #5. This is an optional assignment.

XI. Discuss the suggested pencil lead grades (HB, H, etc.) for various lines.

XII. Give test.

INSTRUCTIONAL MATERIALS

I. Included in this unit:

A. Objective sheet

B. Information sheet

C. Transparency masters

1. TM 1--Arrowheads and Leaders
2. TM 2--Exterior Wall Dimensioning
3. TM 3--Floor Plan Dimensioning
4. TM 4--Plot Plan Dimensioning
5. TM 5--Elevation Dimensioning
6. TM 6--Wall Section Dimensioning

7. TM 7--Detail Dimensioning

8. TM 8--Modular System

9. TM 9--Modular Dimensioning

10. TM 10--Metric Dimensioning

D. Assignment sheets

1. Assignment Sheet #1--Identify Dimensioning Errors

2. Assignment Sheet #2--Dimension a Floor Plan

3. Assignment Sheet #3--Dimension an Elevation

4. Assignment Sheet #4--Prepare and Dimension a Floor Plan According to a Modular System

5. Assignment Sheet #5--Dimension a Detail Using Metric System (Optional)

E. Test

F. Answers to test

II. References:

A. Wyatt, William E. *General Architectural Drawing.* Peoria, IL 61614: Charles A. Bennett Co., Inc., 1969.

B. Brown, Walter C. *Blueprint Reading for Construction Residential and Commercial.* South Holland, IL 60473: Goodheart-Willcox Co., Inc., 1980.

C. Goodban, William T. and Jack J. Hayslett. *Architectural Drawing and Planning.* St. Louis: Gregg Division/McGraw-Hill Book Co., 1979.

D. Obermeyer, Thomas. *Architectural Technology.* St. Louis: Gregg Division/McGraw-Hill Book Co., 1976.

E. Spence, William P. *Architecture Design - Engineering - Drawing.* Bloomington, IL: McKnight Publishing Co., 1979.

F. Wakita, Osamu A. and Richard M. Linde. *The Professional Practice of Architectural Detailing.* New York: John Wiley & Sons, Inc., 1970.

G. Weidhaas, Ernest R. *Architectural Drafting and Construction.* Boston: Allyn and Bacon, Inc., 1974.

DIMENSIONING
UNIT VII

INFORMATION SHEET

I. Terms and definitions

A. Dimensioning--Recording the actual size of the building and its many parts accurately on a drawing

B. Location dimension--Dimension that locates a feature on an object

C. Size dimension--Dimension which tells how large or small an object is

D. Detail dimension--Dimension for a small part

E. Overall dimension--Dimension showing the total length of an object

F. Special notes--Notes which give the name of kinds of materials or operations

(NOTE: Even though identical materials are called out on other details, sections, elevations, or on same sheet, it is standard practice to identify all materials again.)

G. General notes--Notes which give procedures or information usually placed at bottom or right hand of sheet

H. Module--A standard unit of measurement

I. Modular system--Where most materials are equal in size to an established module or a multiple of that module

J. Call out--Specific note that is directed to a specific point on the drawing by the use of a leader

II. Line technique at corners

A. Poor

B. Good

C. Most used

INFORMATION SHEET

III. Correct and incorrect uses of dimensioning

A. Group dimension lines

1. Correct

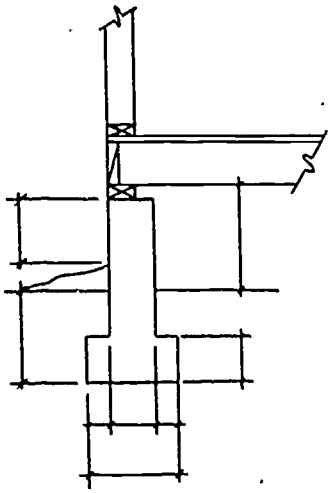

2. Incorrect

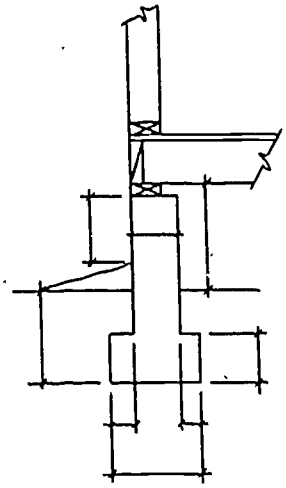

B. Location dimensions

1. Correct

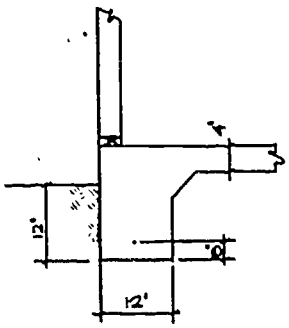

2. Incorrect

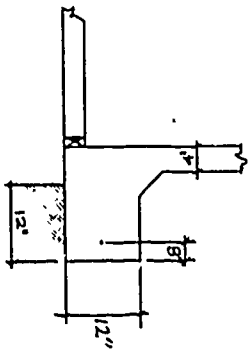

INFORMATION SHEET

C. Crossing dimension lines

1. Correct

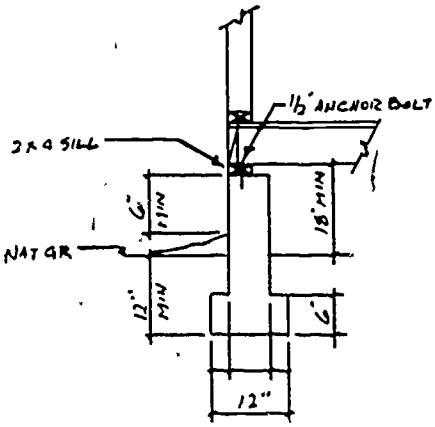

2. Incorrect

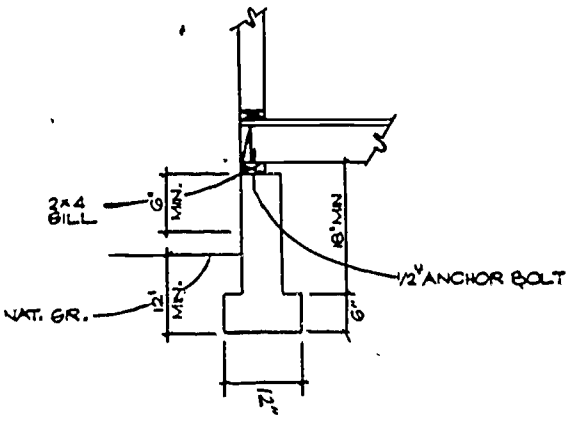

D. Leaders

1. Best

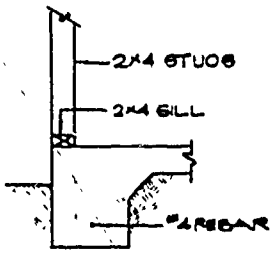

2. Acceptable

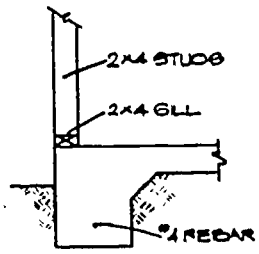

3. Not recommended

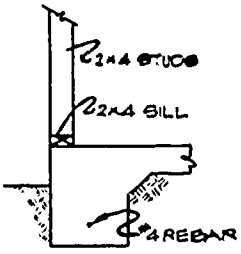

E. Location of leaders

1. Correct

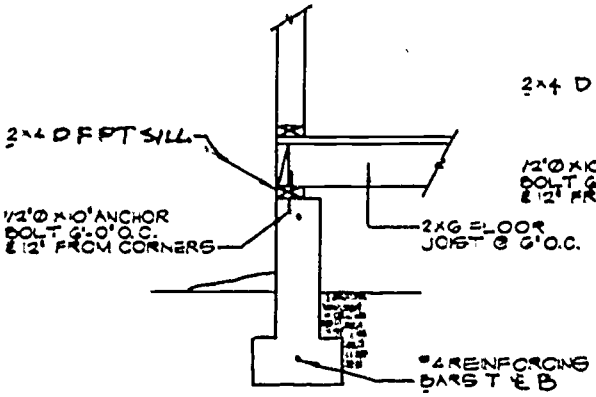

2. Incorrect

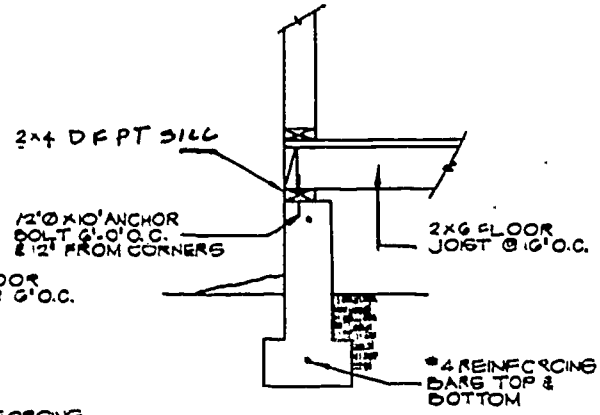

INFORMATION SHEET

F. Note sharing

1. Correct

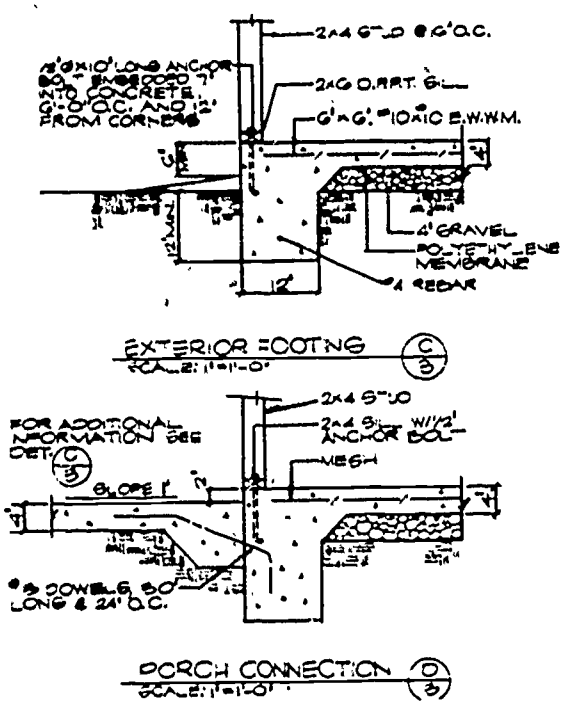

2. Incorrect

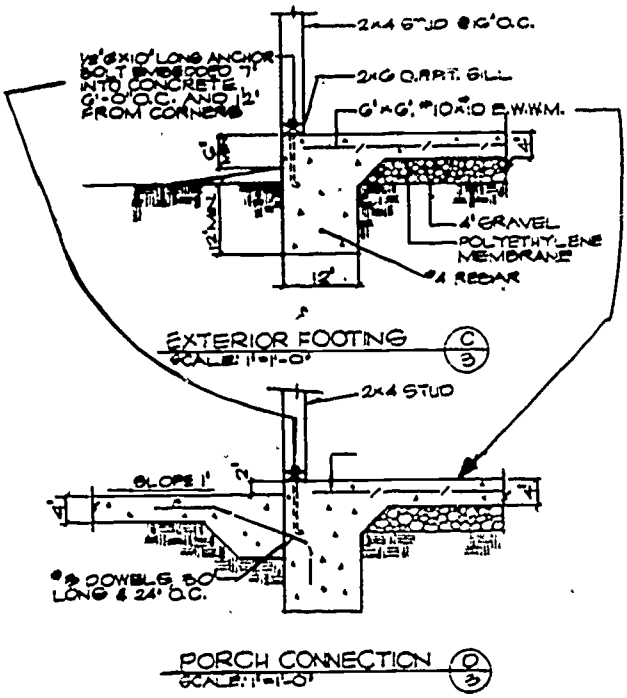

G. Break symbols

1. Correct

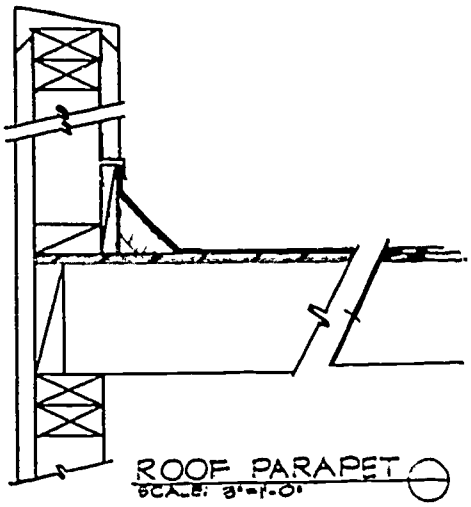

2. Incorrect

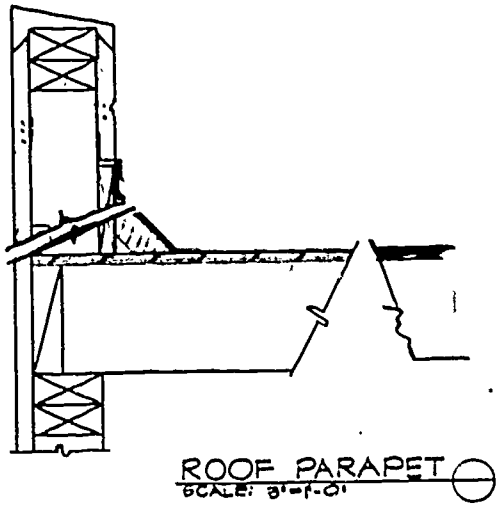

INFORMATION SHEET

IV. Drawing wall thicknesses

A. Wood frame walls

	Actual size	Drawn size
1. Interior	4 1/2"	5"
2. Interior (with vent pipe plumbing)	6 1/2"	6 to 8"
3. Exterior	5"	6"

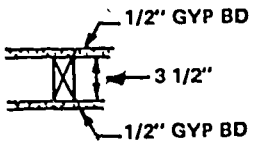

4 1/2" Interior Wall

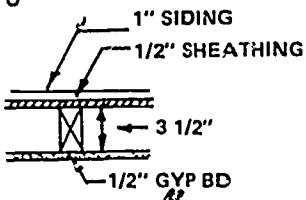

5" Exterior Wall

(NOTE: Thickness of exterior walls may vary because of rigid insulation siding materials.)

B. Brick veneer walls

	Actual size	Drawn size
1. Veneer on frame	9"	10"
2. Veneer on conc. block		

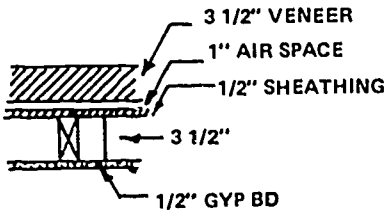

9" Exterior Wall

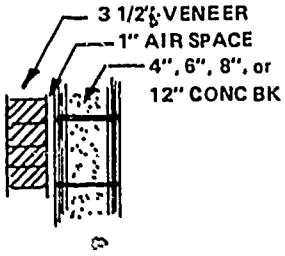

Veneer Masonry Wall

C. Concrete masonry unit walls — 4", 6", 8", or 12" — 4", 6", 8", or 12"

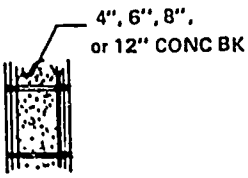

Masonry Wall

INFORMATION SHEET

V. General dimensioning rules (Transparency 1)

A. Everything is dimensioned the actual size, even though it is drawn to scale

B. Dimensions should not be crowded; keep dimensions at least 3/8" from the drawing and from each other

C. An unbroken dimension line should be used and the dimension should be placed above it

D. Distances over 12" are recorded as feet and inches

(NOTE: If the distance is an even number of feet, record the inches with a zero.)

Example: 8'-0"

E. Distances less than one foot are given in inches

Example: 6", not 0'-6"

F. Dimensions are placed on a drawing so they can be read from the bottom or right side of the drawing

(NOTE: This is the aligned method.)

G. Every drawing and detail should have the scale indicated even if on the same page and drawn to the same scale

H. Anything unusual should be explained with a note

(NOTE: Notes are lettered horizontally so they can be read from the bottom of the page and the letters are usually 1/8" high.)

I. Dimension lines are drawn thinner than visible lines used to draw the views

J. Extension lines should not cross dimension lines

K. Extension lines may cross each other

L. Do not dimension to hidden lines unless there is no other way

M. Whenever possible, line up a series of dimensions

N. Place the shortest dimensions near the object; the overall dimension should be on the outside

O. When a space to be dimensioned is too small to receive the figures, place them outside of it

P. Dots or 45° diagonal lines may be used in place of arrowheads

(NOTE: Do not mix dots, diagonal lines, and arrows.)

INFORMATION SHEET

Q. Dimension numerals and notes are lettered 1/8" high

R. North arrow should be attractive but simple on floor and plot plan

Examples:

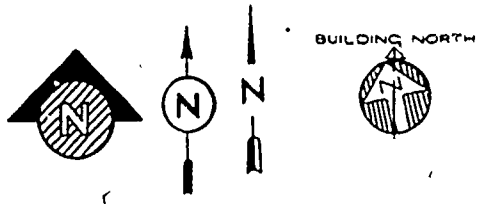

VI. Floor, foundation, and basement plan dimensioning (Transparencies 2 and 3)

(NOTE: The floor plan probably contains more information and references than any other sheet in a set of working drawings.)

A. Dimensions are placed on all sides of the plan

(NOTE: Aligned method is used.)

B. All projections or offsets are dimensioned

C. Overall dimensions are placed on all sides of the drawing

(NOTE: The builder should not have to add or use a scale to find a dimension.)

D. Cumulative dimensions should be added to see that their total equals the overall dimension

E. Identify fixtures and built-in items which cannot be clearly drawn, such as a clothes chute, dishwasher, or garbage disposal

F. The size and direction of ceiling joists and floor joists can be shown by symbol and noted

G. Rooms are identified by name, such as living room

(NOTE: The bedrooms should be numbered to assist the builder when decisions are made concerning the color of paint in the room and other related decisions.)

H. The size and depth of the fireplace opening are commonly shown and hearth material is indicated

I. The width and length of each room is given, and interior walls are located by dimensioning to the center line of wall

J. When dimensioning an exterior frame wall, the dimension extends over the stud

INFORMATION SHEET

K. When dimensioning an exterior masonry veneer wall, 5" is allowed beyond the face of the wall

(NOTE: The veneer overall dimension is given.)

L. Doors and windows in frame walls are dimensioned to their center lines

(NOTE: These dimensions are located on the floor plan.)

M. Doors and windows in solid masonry walls are usually dimensioned to the masonry sides of the opening (Transparency 2)

(NOTE: These dimensions are located on the floor plan.)

N. Door and window sizes can be lettered directly or coded on the floor plan to a door and window schedule

(NOTE: Several code systems are commonly found; one may use numbers for doors and letters for windows.)

O. Any change in floor elevation must be indicated by a line plus a note

P. Floor materials with varying thicknesses must be shown by a solid line and noted

Q. Columns, beams, and piers are located by dimensions to their center lines

R. All obvious dimensions are omitted

(NOTE: interior doors, permanent fixtures, or cabinet doors are not dimensioned.)

S. Areas to be cut or filled should be noted

T. Materials in concrete floors should be noted

VII. Site and plot plan dimensioning (Transparency 4)

A. The boundaries of a plot are described by dimensions given in 100ths of a foot

Example: 153.75'

B. Bearings are given to show the compass direction of all the boundaries

Example: N 3° 27' E

C. Contour lines are dimensioned by indicating their elevation above sea level or some other known datum level

D. Dimensions of required setback from street are shown

E. Dimensions of building, location of sidewalks and driveway, easement, flood plain, and retaining walls are shown

INFORMATION SHEET

F. Water well or private sewage disposal system to be used are indicated

G. Lot description, lot number, street, scale, and north arrow are noted

H. Existing or new plantings of trees and shrubs are noted if in contract

I. Utility service should be indicated by note and symbols

VIII. Elevation dimensioning (Transparency 5)

A. The ceiling line and finished floor line are indicated and the total distance between these is shown

B. Roof slope is indicated by the symbol

(NOTE: The example in Transparency 5 is 10 12 ; this indicates 10" of rise in the roof for every 12" of run.)

C. Exterior materials are noted such as brick, asphalt shingles, or board and batten siding

D. The overhang of the roof at the eaves is frequently dimensioned

E. The finished grade is indicated with a note

F. Window sizes and door sizes are sometimes lettered below the door or window, but the door and window schedule is preferred

G. Heights of chimneys above the ridge line are dimensioned

H. Crawl space is called out

IX. Detail and wall section dimensioning (Transparencies 6 and 7)

A. The dimensions, material, and location of all members in a wall section are specified

B. Draw materials to their actual size

C. Materials are noted to their nominal size

D. The floor, fill, foundation wall, and footing are dimensioned

E. Finish floor to finished ceiling distance is specified

F. Cabinets and other built-ins require only intermediate and overall dimensions

G. Fireplace details should be completely dimensioned and materials should be indicated with a note

H. Stair details should have tread and riser indicated and total stair rise and run noted

I. Notes should be kept in straight line for neatness

INFORMATION SHEET

X. HVAC plan dimensioning

A. Main supply, runs, and return line sizes are noted

B. Volume of air output and sizes for registers are noted

C. Information about heating-cooling unit may be described in a general note

D. Dimension location of heat-cooling source on foundation plan

XI. Plumbing plan dimensioning

(NOTE: Only partial plans are usually shown on small buildings and detail information is included on the floor plans.)

A. Location and size of soil stacks, vents, drains, and supply lines should be noted on plan view or isometric drawing

B. Size collars for passage of pipes in foundation walls on foundation drawings

C. Note, describe, and dimension septic tank and drain field

D. Note special traps and drains

E. Locate water meter and water lines entering building

XII. Advantages of the modular system (Transparency 8)

A. Reduces cutting and fitting

B. Reduces building cost

C. Standardizes sizes of building materials

D. Reduces drafting errors by reducing fractional dimensions

XIII. Modular dimensioning (Transparency 9)

A. Show light 4" grids on all plans, elevations, and sections drawn to scale of 3/4" = 1'-0".

(NOTE: For smaller scales, use 4' grid.)

B. Center the building parts on grid lines or between grid lines

C. To indicate location of building parts, use grid dimensions

D. Use a dot to indicate any position not on a grid line

INFORMATION SHEET

XIV. Metric dimensioning (Transparency 10)

A. Measurements in millimeters are given in whole numbers

B. It is not necessary to label mm on dimensions

(NOTE: A note such as ALL DIMENSIONS SHOWN IN MILLIMETERS may be used.)

C. Fractional parts are expressed in decimals

D. When the size of an item is shown, all dimensions should be in the same unit

(NOTE: Occasionally meters are used, but the preferred unit of measurement is millimeters.)

XV. Dimensioning abbreviations

Air conditioning	A/C	Furred	FUR
Anchor bolt	AB	Hot water	HW
Asphalt	ASPH	Joint	JT
Basement	BSMT	Kitchen	KIT
Bedroom	BR	Lavatory	LAV
Block	BLK	Living room	LR
Building	BLDG	Long	LG
Cabinet	CAB	Masonry opening	MO
Ceiling	CLG	Medicine cabinet	MC
Ceiling joist	CJ	On center	OC
Center to center	C to C	Overhead	O.H.
Closet	CL	Refrigerator	REF
Column	COL	Reinforcing bar	REBAR
Concrete	CONC	Sheathing	SHTHG
Dining room	DR	Siding	SDG
Dishwasher	DW	Sill cock	SC
Dryer	D	Specification	SPEC
Each way	E.W.	Veneer	VNR
Elevation	EL	Washer	W
Finish	FIN	Water closet	WC
Fireplace	FPL	Weatherproof	WP
Floor	FL	Wire mesh	WM
Foundation	FND	Wire mesh	WM
Frame	FR		
Furnace	FURN		

Arrowheads and Leaders

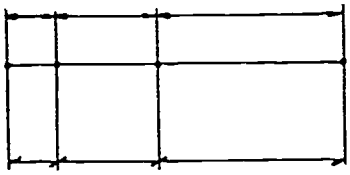

Arrows
Dots

45° Diagonal Lines

Arrowhead Types

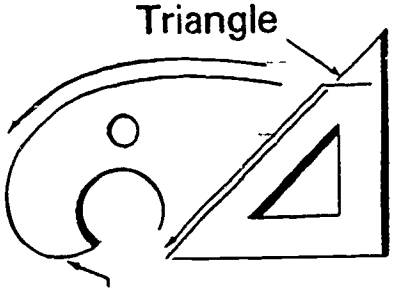

Construction of Leaders

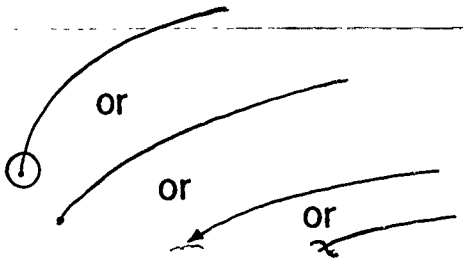

Surface Note Leaders

1/2" ϕ x 10" Anchor
Bolt 6'-0" O. C.
& 12" From Corners

End of Note --Correct

1/2" ϕ x 10" Anchor
Bolt 6'-0" O. C.
& 12" From Corners

In Middle of Note--Incorrect

1/2" ϕ x 10" Anchor
Bolt 6'- 0" O. C.
&12" From Corners

Beginning of Note--Correct

Leader Origin

Exterior Wall Dimensioning

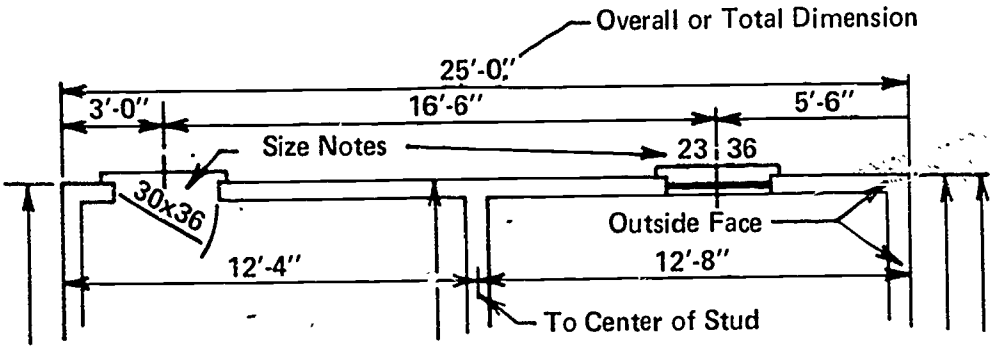

Frame

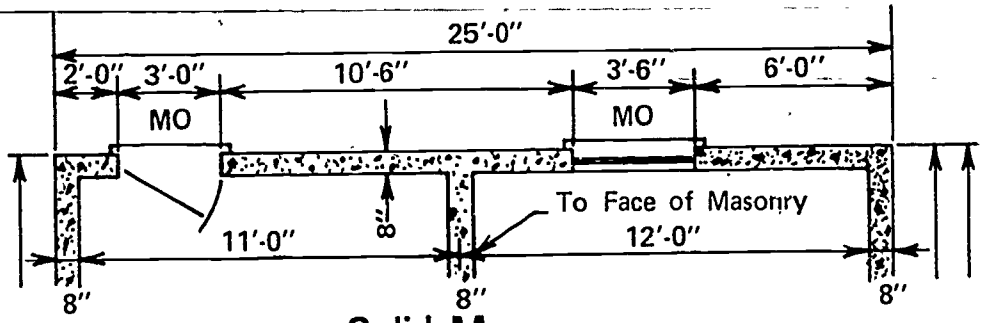

Solid Masonry

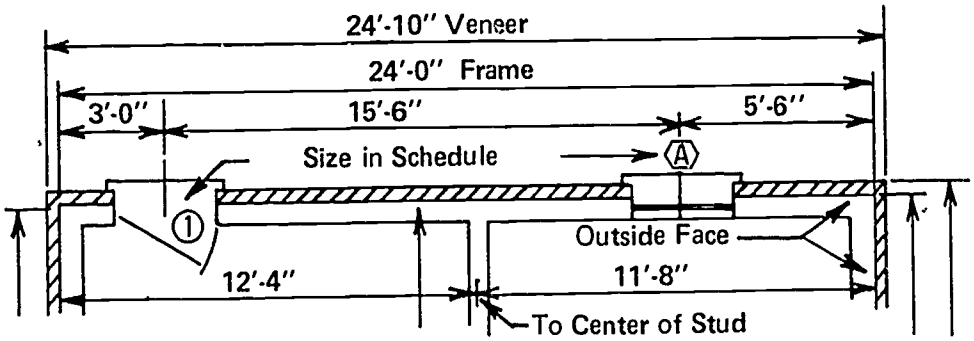

Masonry Veneer

Floor Plan Dimensioning

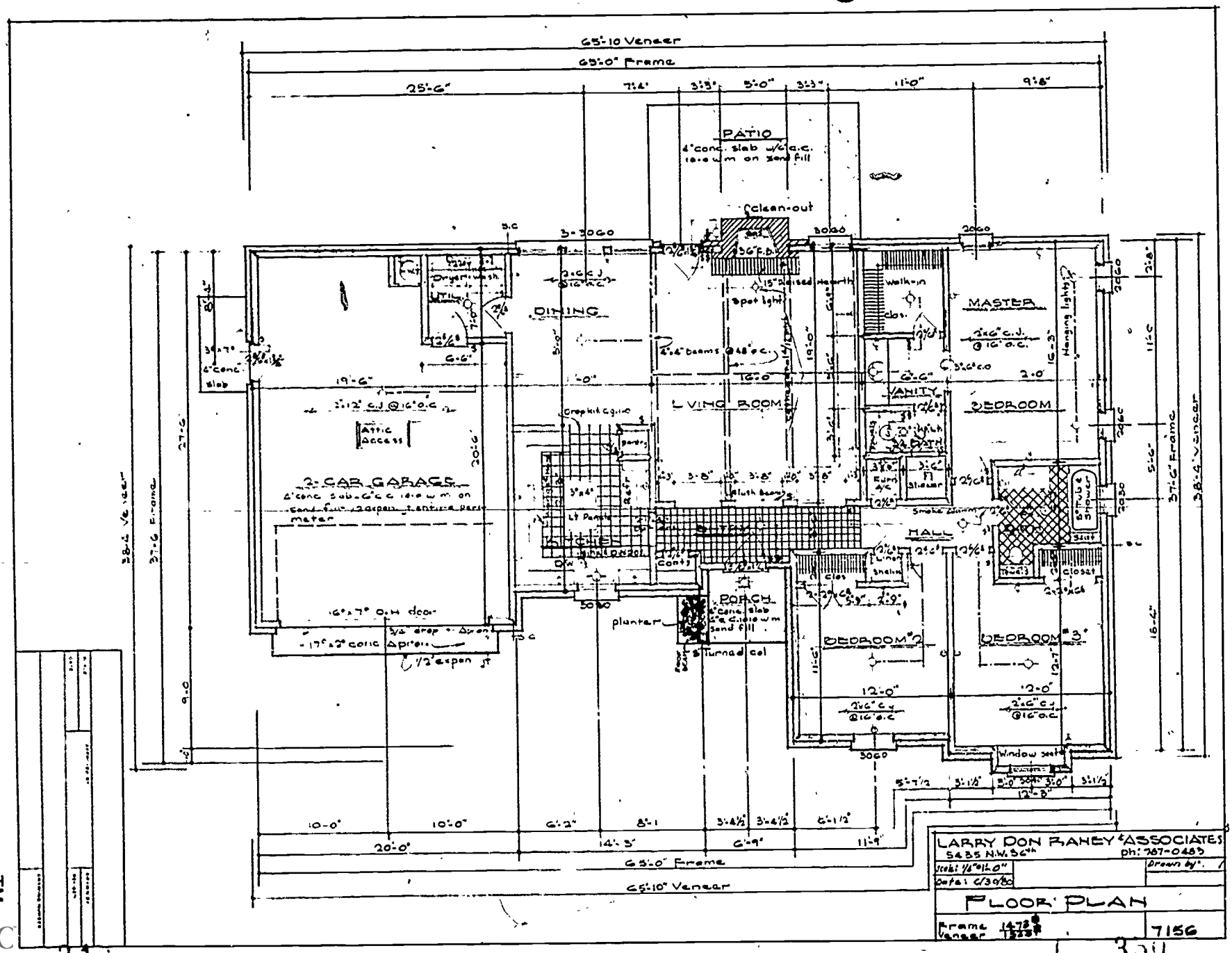

AD-433

TM

Plot Plan Dimensioning

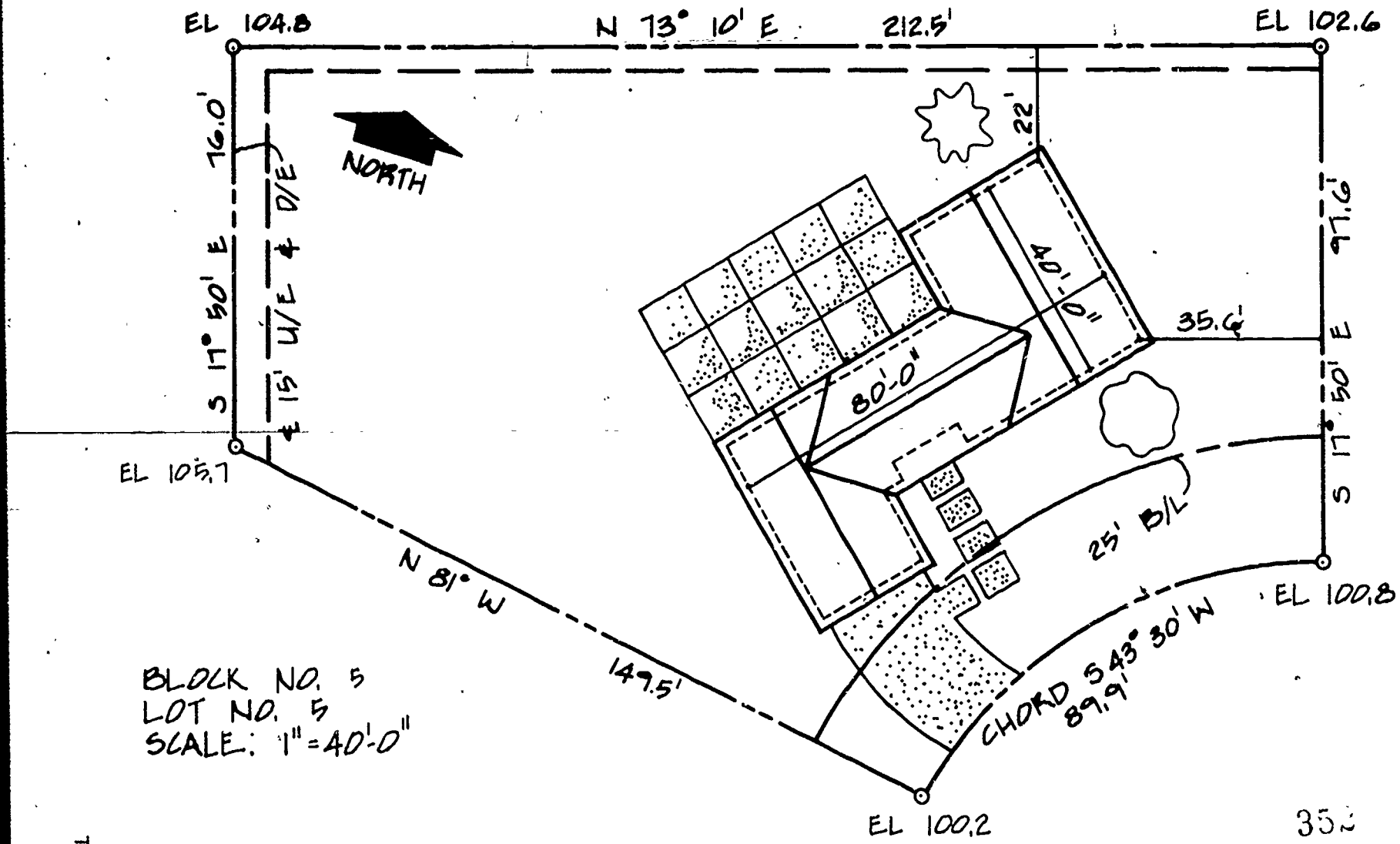

Elevation Dimensioning

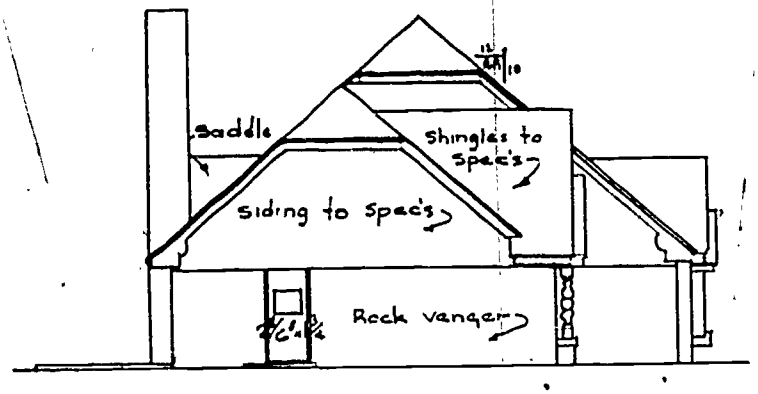

LEFT SIDE

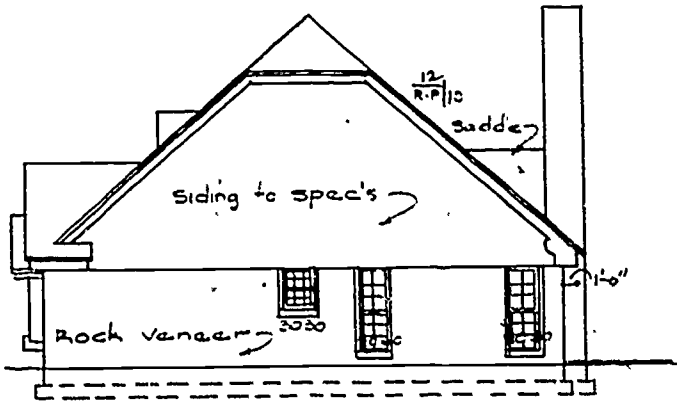

RIGHT SIDE

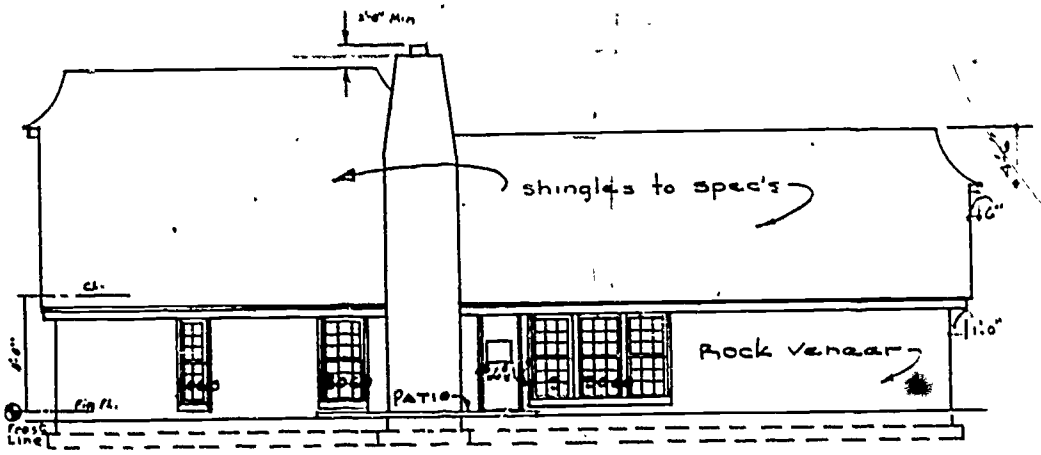

REAR
scale: 1/8" = 1'-0"

(Note: Since the front elevation is often rendered, the dimensioning information is shown on other views.)

Wall Section Dimensioning

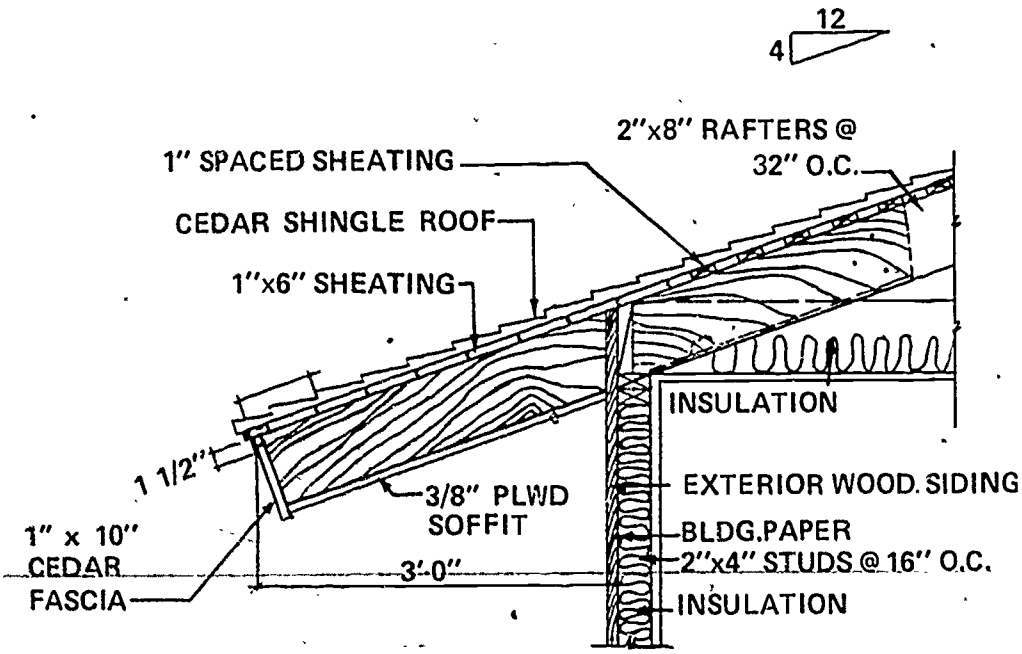

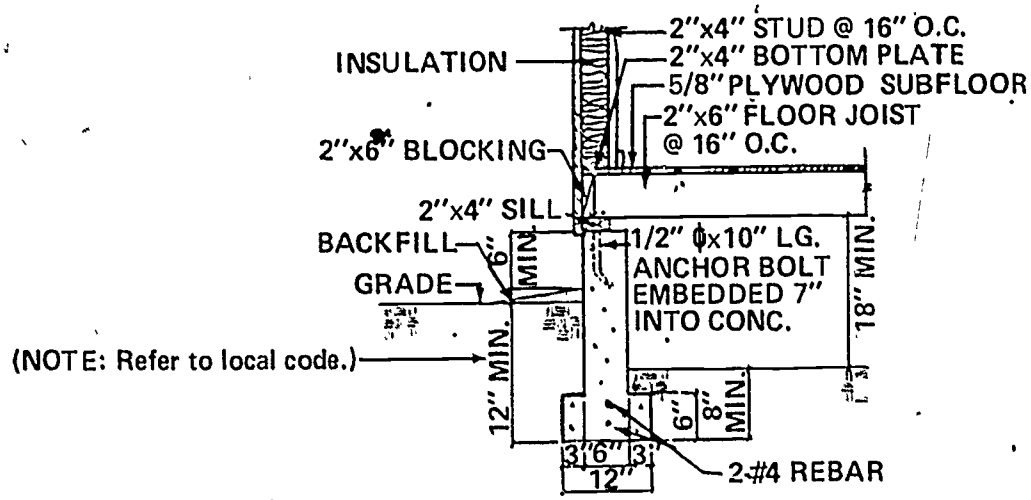

Typical Wall Section

Scale ¾" = 1'-0"

Detail Dimensioning

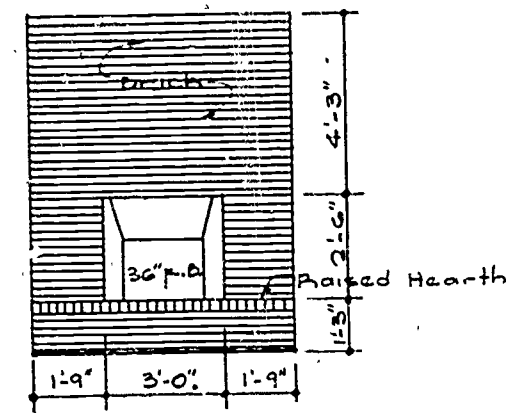

FIREPLACE

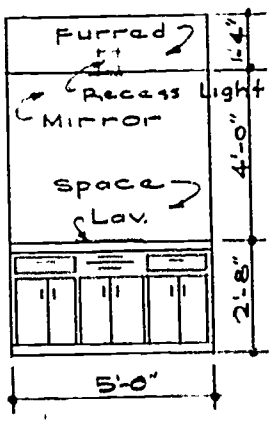

VANITY

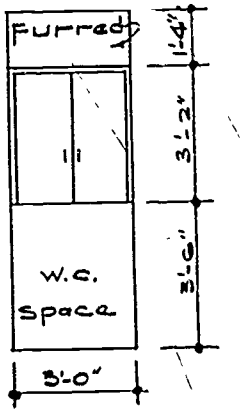

TOWELS

MASTER BATH

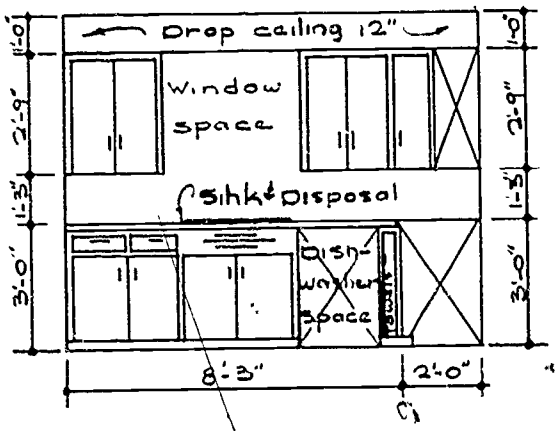

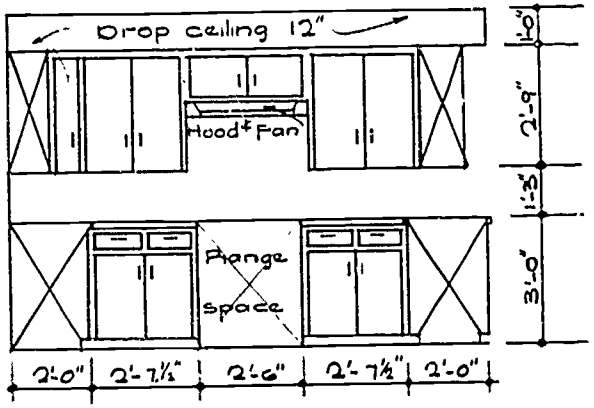

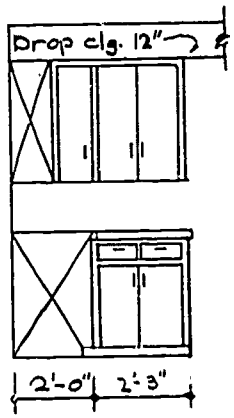

KITCHEN CABINETS

Modular System

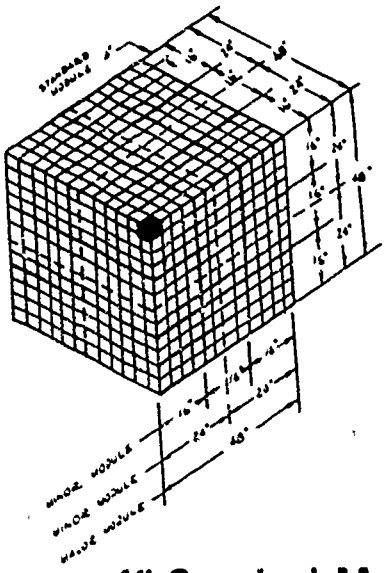

4" Standard Modular System

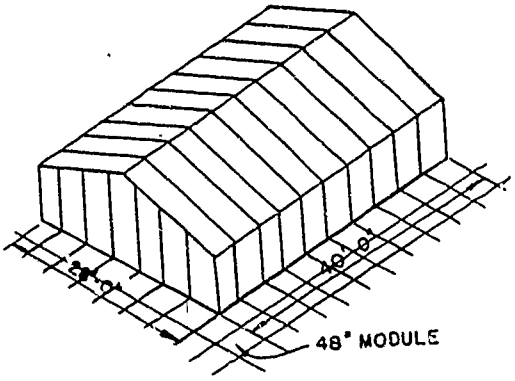

48" Modular

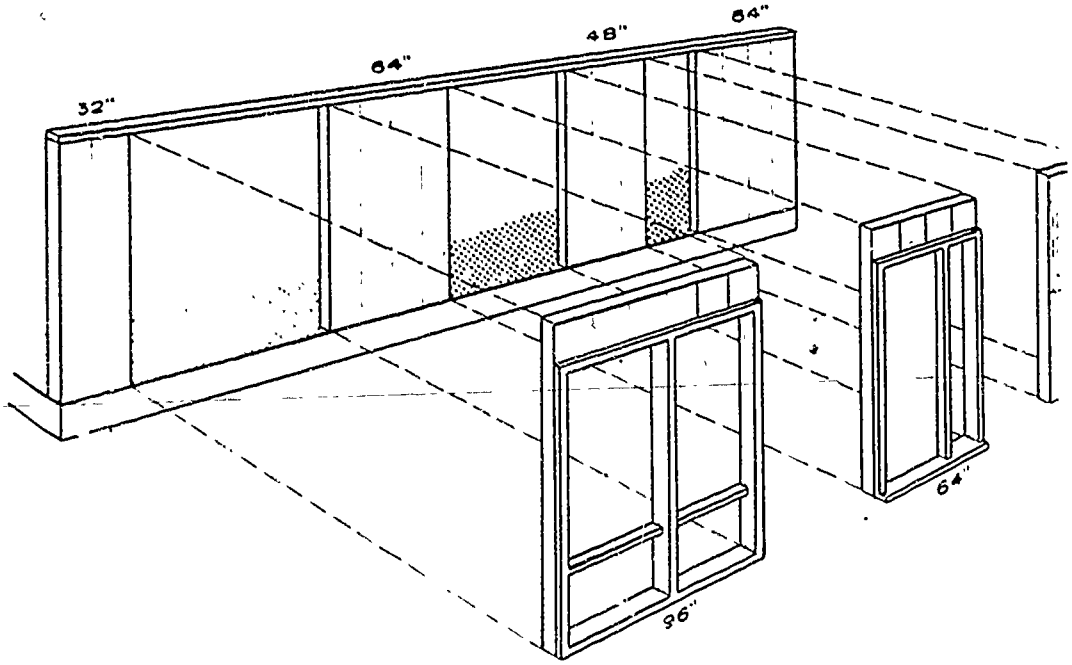

Wall, Window, and Door Components

Modular Dimensioning

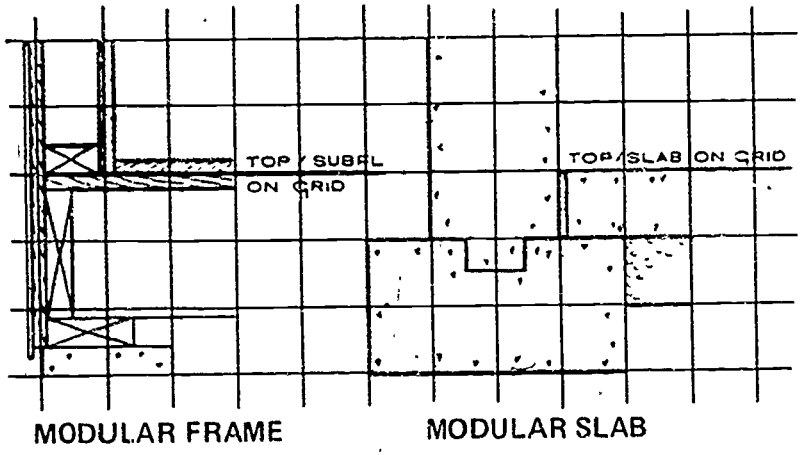

Vertical Positioning

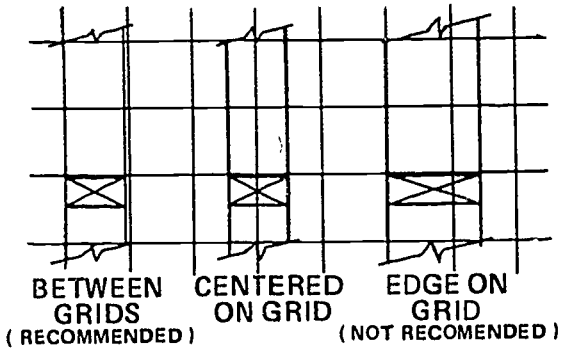

Stud Wall to Grid Line

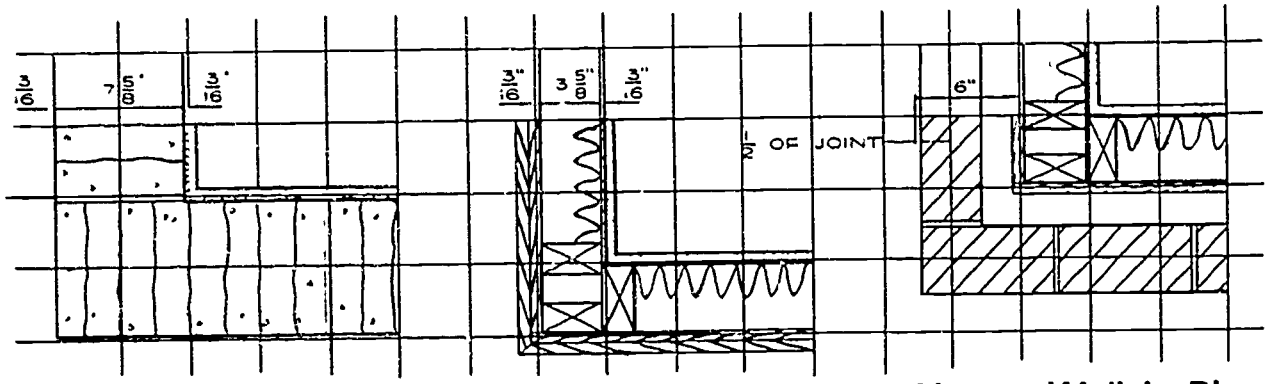

Masonry Wall in Plan

Frame Wall in Plan

Veneer Wall in Plan

Metric Dimensioning

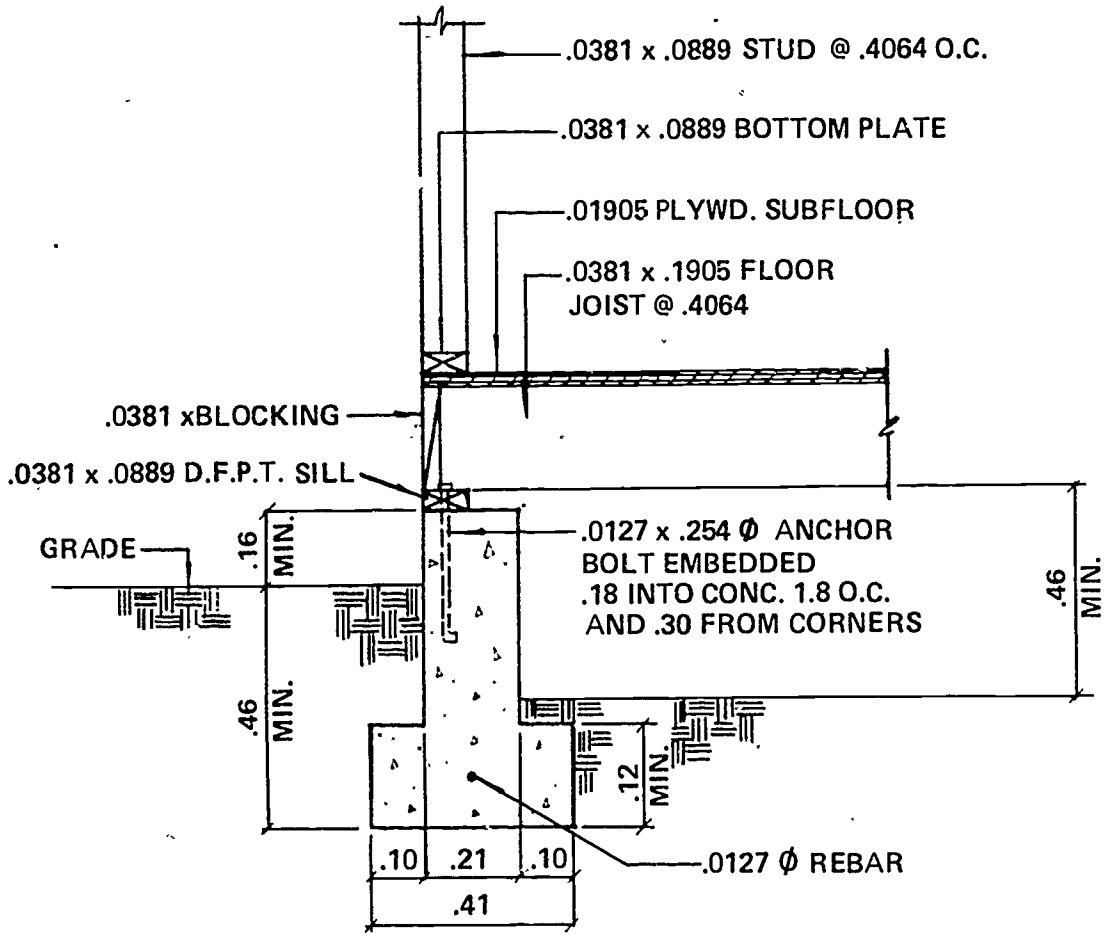

2–Story Footing

Scale : 1:10

Note All Sizes Are Net

DIMENSIONING
UNIT VII

ASSIGNMENT SHEET #1--IDENTIFY DIMENSIONING ERRORS

Directions: Identify the dimensioning errors shown on the following floor plan.

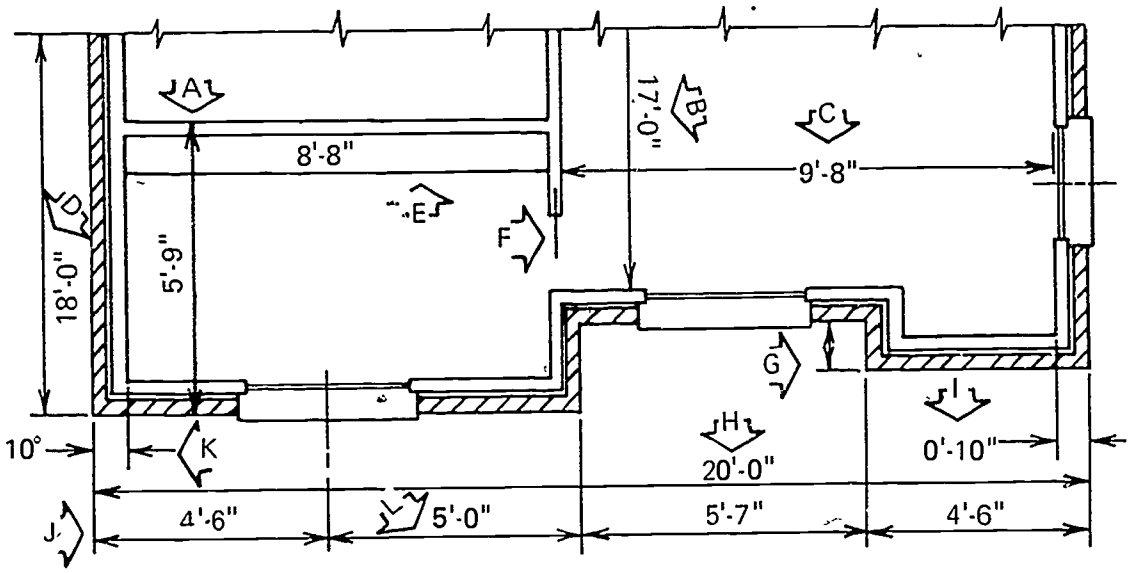

A. _____

B. _____

C. _____

D. _____

E. _____

F. _____

G. _____

H. _____

I. _____

J. _____

K. _____

L. _____

DIMENSIONING
UNIT VII

ASSIGNMENT SHEET #2--DIMENSION A FLOOR PLAN

Directions: Dimension the floor plan in the problem on vellum with 1/4" = 1'-0" scale. Use the procedure in the example to aid in placement of dimension and extension lines.

Example:

1. Place a line of dimensions on every outside wall containing a window or door at least 3/8" beyond the farthest projection (Figure 1)

FIGURE 1

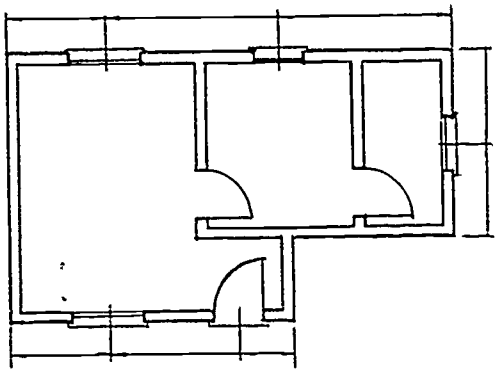

2. Place a second line of dimensions on every wall containing offsets to provide subtotal dimensions for each wall (Figure 2)

FIGURE 2

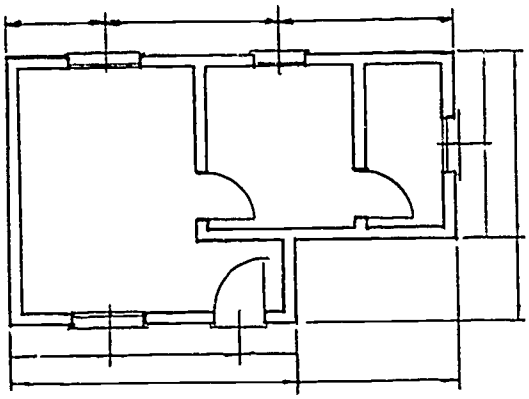

ASSIGNMENT SHEET #2

3. Place overall dimension lines and check that the subtotal dimensions equal the overall dimension (Figure 3)

FIGURE 3

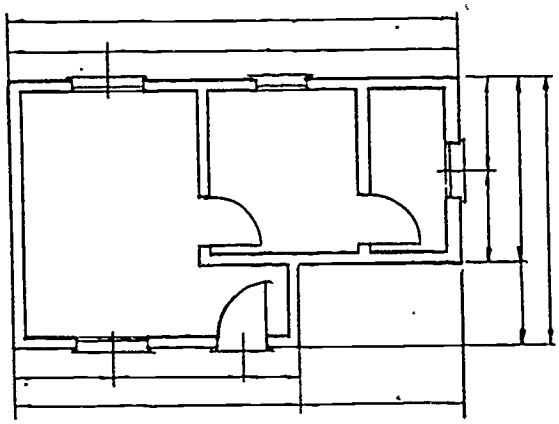

4. Place lines of interior dimensions to locate partitions and interior features (Figure 4)

FIGURE 4

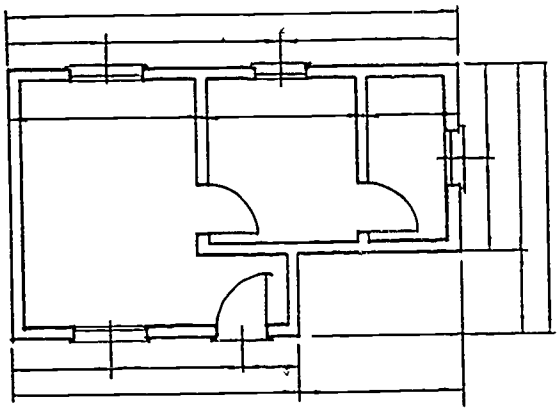

5. Place additional required notes and schedule reference symbols to complete the drawing

Problem: Dimension one of the floor plans that you drew in Unit VI, "Working Drawings."

DIMENSIONING
UNIT VII

ASSIGNMENT SHEET #3--DIMENSION AN ELEVATION

Directions: Dimension the elevation that you drew in Assignment Sheet #7 of Unit VI, "Working Drawings."

DIMENSIONING
UNIT VII

ASSIGNMENT SHEET #4--PREPARE AND DIMENSION A FLOOR PLAN ACCORDING TO A MODULAR SYSTEM

Directions. Prepare and dimension on grid vellum the floor plan in Assignment Sheet #2 according to a modular system.

DIMENSIONING
UNIT VII

ASSIGNMENT SHEET #5--DIMENSION A DETAIL USING METRIC SYSTEM (OPTIONAL)

(NOTE: You should have completed Unit VIII, "Metric Scale Usage" of *Basic Drafting, Book One* before starting this assignment sheet.)

Directions: In order to understand metric dimensioning, an example of converting inch values to metric is given. Use this example as a guideline for dimensioning the problem which follows.

Example:

1. Convert all nominal sizes to actual sizes

   2" X 4" = 1 1/2" X 3 1/2"
   2" X 8" = 1 1/2" X 7 1/2"
   #4 = 1/2"

2. List required sizes in order

1/2"	7 1/2"
3/4"	8"
1 1/2"	10"
3 1/2"	12"
4"	16"
6"	18"
7"	6'-0"

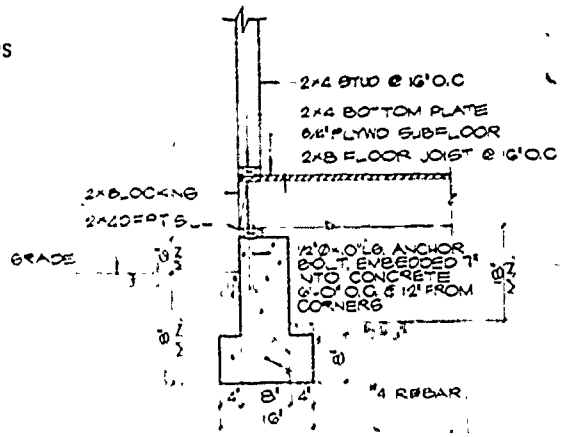

2-STORY FOOTING
SCALE 1"=1'-0"

3. Convert sizes to metric equivalent

		Millimeters
1/2 = .5	X 25.4 =	12.7
3/4 = .75	X 25.4 =	19.05
1 1/2 = 1.5	X 25.4 =	38.1
3 1/2 = 3.5	X 25.4 =	88.9
4	X 25.4 =	101.6
6	X 25.4 =	152.4
7	X 25.4 =	177.8
7 1/2 = 7.5	X 25.4 =	190.5
8	X 25.4 =	203.2
10	X 25.4 =	254.0
12	X 25.4 =	304.8
16	X 25.4 =	406.4
18	X 25.4 =	457.2
6'-0"	X 304.8 =	1828.8

(NOTE: Refer to metric equivalent chart for other sizes.)

4. Select an appropriate metric scale

   (NOTE: In this example a 1:10 metric scale was selected. This is approximately equal to a 1" = 1'-0" scale.)

ASSIGNMENT SHEET #5

5. Construct a drawing of the detail using selected scale

6. Dimension and note all parts of the detail

7. Check total sums of the parts

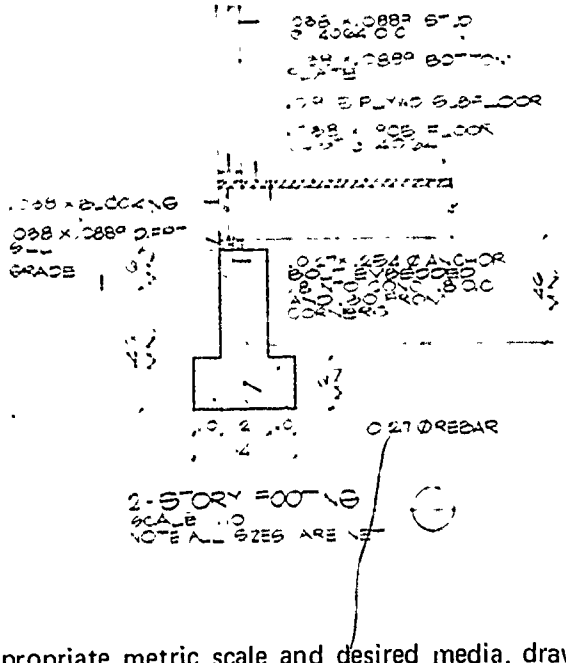

Problem: Using an appropriate metric scale and desired media, draw and dimension the following detail with metric dimensions.

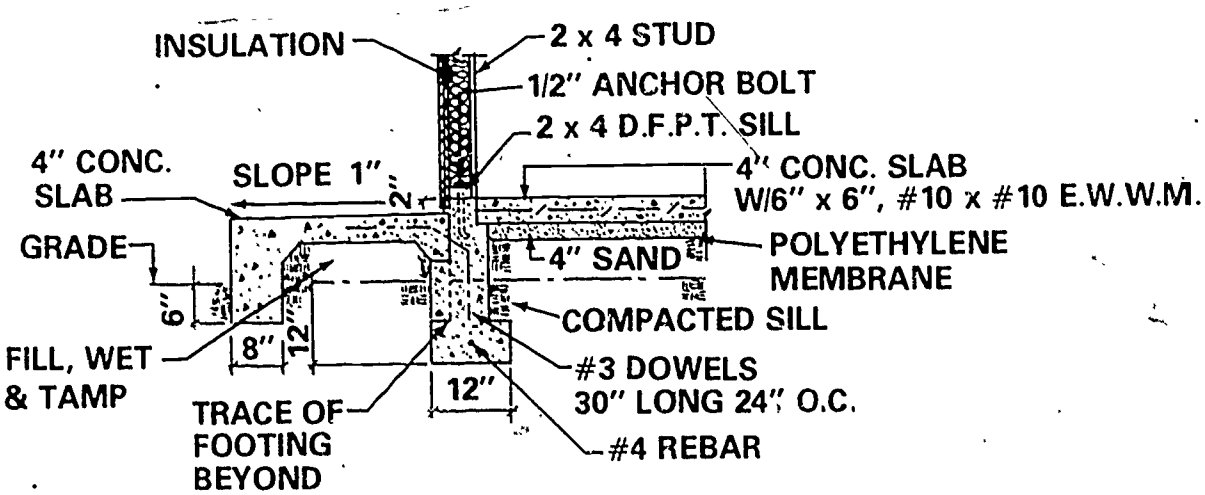

PORCH CONNECTION

SCALE: 1" = 1'-0"

DIMENSIONING
UNIT VII

NAME _____

TEST

1. Match the terms on the right with the correct definitions.

_____a. Recording the actual size of the building and its many parts accurately on a drawing	1. Dimensioning
_____b. Dimension that locates a feature on an object	2. Size dimension
_____c. Dimension which tells how large or small an object is	3. Special notes
_____d. Dimension for a small part	4. Modular system
_____e. Dimension showing the total length of an object	5. Location dimension
_____f. Notes which give the name of kinds of materials or operations	6. General notes
_____g. Notes which give procedures or information usually placed at bottom or right hand of sheet	7. Detail dimension
_____h. A standard unit of measurement	8. Call out
_____i. Where most materials are equal in size to an established module or a multiple of that module	9. Module
_____j. Specific note that is directed to a specific point on a drawing by the use of a leader	10. Overall dimension

2. Select the line technique for corners which is most used by placing an "X" in the appropriate blank.

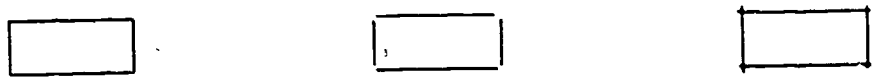

a. _____ b. _____ c. _____

3. Distinguish between correct and incorrect uses of dimensioning by placing an "X" next to the correct uses.

a. Group dimension lines

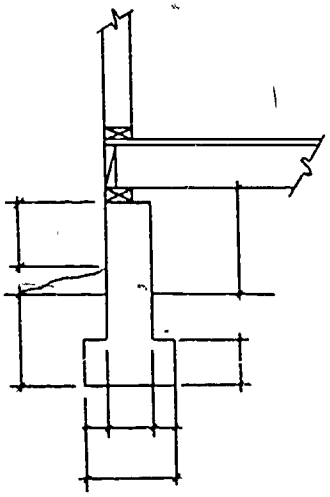

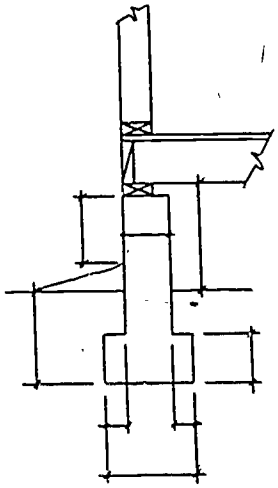

1) _____ 2) _____

b. Location dimensions

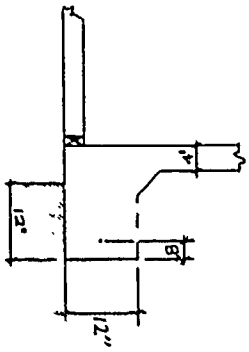

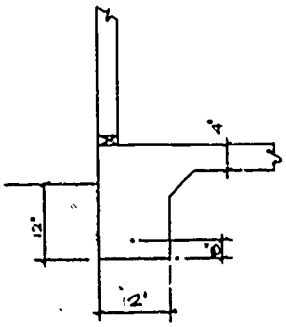

1) _____ 2) _____

c. Crossing dimension lines

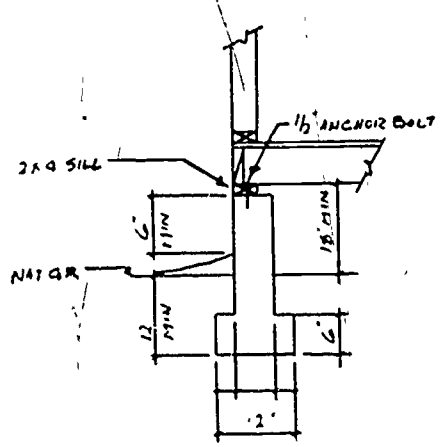

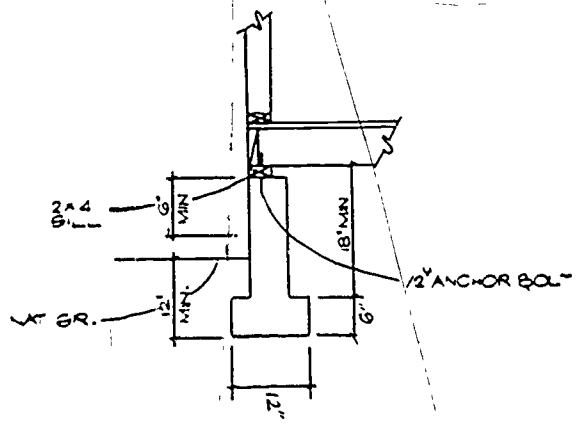

1) _____ 2) _____

d. Leaders

– (NOTE: Select the illustration which is best.)

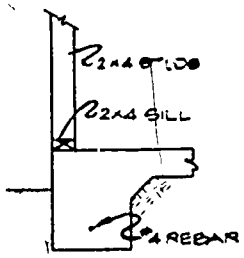

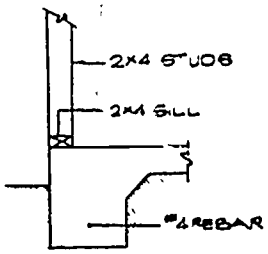

1) _____ 2) _____

e. Location of leaders

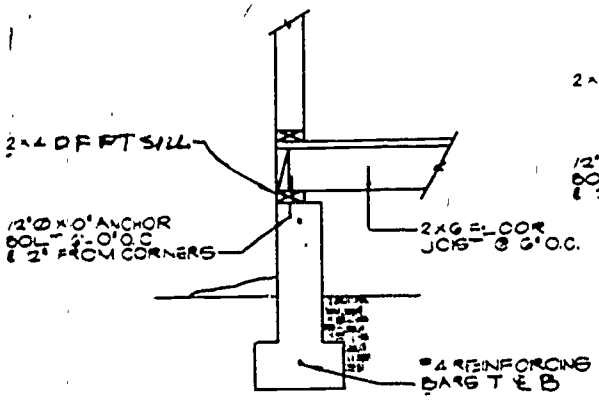

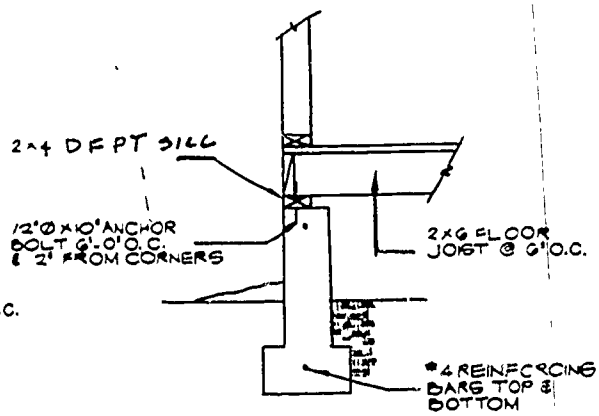

1) _____ 2) _____

4. Complete the following chart for drawing wall thicknesses.

	Actual Size	Drawn Size
a. Wood frame walls		
1) Interior	_____	_____
2) Interior (with vent pipe plumbing)	6 1/2"	_____
3) _____	5"	6"
b. Brick veneer on frame	_____	10"
c. Concrete masonry unit walls	4", 6", 8", or 12"	4", 6", 8", or 12"

5. Select true statements concerning general dimensioning rules by placing an "X" in the appropriate blanks.

_____a. Everything does not need to be dimensioned the actual size

_____b. Dimensions should not be crowded; keep dimensions at least 3/8" from the drawing and from each other

_____c. A broken dimension line should be used and the dimension should be placed below it

_____d. Distances less than one foot are given in inches

_____e. Dimensions are placed on a drawing so they can be read from the left side of the drawing

_____f. Dimension lines are drawn heavier than visible lines used to draw the views

_____g. Extension lines should always cross dimension lines

_____h. Extension lines may not cross each other

_____i. Whenever possible, line up a series of dimensions

_____j. Place the shortest dimensions near the object; the overall dimension should be on the outside

_____k. When a space to be dimensioned is too small to receive the figures, delete the figures

_____l. Dimension numerals and notes are lettered 1" high

6. Select true statements concerning floor, foundation, and basement plan dimensioning by placing an "X" in the appropriate blanks.

_____a. Projections and offsets are not dimensioned

_____b. Cumulative dimensions should be added to see that their total equals the overall dimension

_____c. Identify fixtures and built-in items which cannot be clearly drawn, such as a clothes chute, dishwasher, or garbage disposal

_____d. The size and direction of ceiling joists and floor joists can be shown by symbol and noted

_____e. Rooms are not identified by name

_____f. The size and depth of the fireplace opening are commonly shown and hearth material is indicated

_____g. The width and length of each room is given, and interior walls are located by dimensioning to the center line of wall

_____h. When dimensioning an exterior frame wall, the dimension never extends over the stud

_____i. When dimensioning an exterior masonry veneer wall, 12" is allowed beyond the face of the wall

_____j. Doors and windows in solid masonry walls are usually dimensioned to the masonry sides of the opening

_____k. Door and window sizes must always be noted directly on the floor plan

_____l. Floor material does not need to be indicated on the plan

_____m. Areas to be cut or filled should not be noted

_____n. Materials in concrete floors do not have to be noted

7. Select true statements concerning site and plot plan dimensioning by placing an "X" in the appropriate blanks.

_____a. The boundaries of a plot are described by dimensions given in whole numbers

_____b. Elevation marks are given to show the compass direction of all the boundaries

_____c. Contour lines are dimensioned by indicating their elevation above sea level or some other known datum level

_____d. Dimensions of required setback from street should be deleted

_____e. Dimensions of building, location of sidewalks and driveway, easement, flood plain, and retaining walls are shown

_____f. Water well or private sewage disposal system need not be shown

_____g. Lot description, lot number, street numbers need not be indicated on plan

_____h. Scale is never noted since it varies

_____i. Utility service should be indicated by note and symbols

8. Select true statements concerning elevation dimensioning by placing an "X" in the appropriate blanks.

_____a. The ceiling line and finished floor line are indicated and the total distance between these is shown

_____b. Roof slope is indicated by the symbol ϕ

_____c. The overhang of the roof at the eaves is indicated on a separate drawing

_____d. The finished grade is indicated with a note

_____e. Window sizes and door sizes are sometimes lettered below the door or window, but the door and window schedule is preferred

9. Select true statements concerning detail and wall section dimensioning by placing an "X" in the appropriate blanks.

_____a. The dimensions, material, and location of all members in a wall section are specified

_____b. Draw materials to their actual size

_____c. Finish floor to finished ceiling distance is not specified

_____d. Cabinets and other built-ins require extensive, complete dimensions

_____e. Fireplace details require only overall dimensions

_____f. Stair details should have tread and riser indicated and total stair rise and run noted

10. Select true statements concerning HVAC plan dimensioning by placing an "X" in the appropriate blanks.

_____a. Main supply, runs, and return line sizes are noted

_____b. Volume of air output and sizes for registers do not need to be noted

_____c. Information about heating-cooling unit may be described in a general note

_____d. Dimension location of heat-cooling source on site plan

11. Select true statements concerning plumbing plan dimensioning by placing an "X" in the appropriate blanks.

_____a. Location and size of soil stacks, vents, drains, and supply lines should be noted on elevation plan

_____b. Size collars for passage of pipes in foundation walls on foundation drawings

_____c. Septic tank and drain field does not need to be dimensioned

_____d. Note special traps and drains

_____e. Locate water meter and water lines entering building

12. List two advantages of the modular system.

a. _____

b. _____

13. Select true statements concerning modular dimensioning by placing an "X" in the appropriate blanks.

_____a. Show light 12" grids on all plans, elevations, and sections drawn to scale of 3/4" = 20'-0"

_____b. Center the building parts on grid lines or between grid lines

_____c. To indicate location of building parts, use grid dimensions

_____d. Use an X to indicate any position not on a grid line

14. Select true statements concerning metric dimensioning by placing an "X" in the appropriate blanks.

_____a. Measurements in millimeters are taken to 5 decimal places

_____b. Always label mm on every dimension

_____c. Fractional parts are expressed in decimals

_____d. When the size of an item is shown, all dimensions should be in the same unit

15. Complete the following chart of dimensioning abbreviations.

a.	_____	A/C	f.	_____	HW
b.	Bedroom	_____	g.	_____	LR
c.	Ceiling	_____	h.	Reinforcing bar	_____
d.	_____	CL	i.	Weatherproof	_____
e.	_____	FPL			

16. Demonstrate the ability to:

a. Identify dimensioning errors.

b. Dimension a floor plan.

c. Dimension an elevation.

d. Prepare and dimension a floor plan according to a modular system.

e. Dimension a detail using metric system (optional).

(NOTE: If these activities have not been accomplished prior to the test, ask your instructor when they should be completed.)

DIMENSIONING
UNIT VII

ANSWERS TO TEST

1. a. 1 f. 3
   b. 5 g. 6
   c. 2 h. 9
   d. 7 i. 4
   e. 10 j. 8

2. c

3. a. 1 d. 2
   b. 2 e. 1
   c. 1

4.

	Actual Size	Drawn Size
a. Wood frame walls		
1) Interior	4 1/2"	5"
2) Interior (with vent pipe plumbing)	6 1/2"	6 to 8"
3) Exterior	5"	6"
b. Brick veneer on frame	9"	10"
c. Concrete masonry unit	4", 6", 8", or 12"	4", 6", 8", or 12"

5. b, d, i, j

6. b, c, d, f, g, j

7. c, e, i

8. a, d, e

9. a, b, f

10. a, c

11. b, d, e

12. Any two of the following:
    a. Reduces cutting and fitting
    b. Reduces building cost
    c. Standardizes sizes of building materials
    d. Reduces drafting errors by reducing fractional dimensions

13. b, c

14. c, d

15. a. Air conditioning
    b. BR
    c. CLG
    d. Closet
    e. Fireplace
    f. Hot water
    g. Living room
    h. REBAR
    i. WP

16. Evaluated to the satisfaction of the instructor

FOUNDATIONS
UNIT VIII

UNIT OBJECTIVE

After completion of this unit, the student should be able to identify the types of footing systems and list methods of waterproofing, protecting a structure from termites, and preventing breakage of foundations. The student should also be able to calculate footing sizes, draw a foundation plan, and detail a foundation section. This knowledge will be evidenced by correctly performing the procedures outlined in the assignment sheets and by scoring 85 percent on the unit test.

SPECIFIC OBJECTIVES

After completion of this unit, the student should be able to:

1. Match terms related to foundations with the correct definitions.
2. Complete a chart of abbreviations used on foundation plans and details.
3. Name the two types of floor systems.
4. List advantages and disadvantages of wood foundations.
5. Identify types of footing systems.
6. Identify typical crawl space footing detail drawings.
7. Identify typical slab floor footing detail drawings.
8. List methods of waterproofing the foundation wall and concrete slab.
9. List methods of protecting a structure from termites.
10. Select methods of preventing breakage of foundations and concrete slabs.
11. Select true statements concerning designing and constructing a footing.
12. Select true statements concerning designing piling and grade beams.
13. Select true statements concerning designing a slab foundation system.
14. Match symbols used in foundation plans and details with the correct names.
15. Distinguish between live and dead loads.
16. List preliminary steps to drawing a foundation plan.

17. Demonstrate the ability to:

    a. Calculate the footing requirements for a typical one-story frame house.

    b. Calculate pier or column footing requirements.

    c. Draw a foundation plan.

    d. Detail a foundation section.

FOUNDATIONS
UNIT VIII

SUGGESTED ACTIVITIES

I. Provide student with objective sheet.

II. Provide student with information and assignment sheets.

III. Make transparencies.

IV. Discuss unit and specific objectives.

V. Discuss information and assignment sheets.

VI. Review information presented in Unit V, "Structural Systems" concerning concrete.

VII. Invite speakers who are experienced in soil mechanics.

VIII. Take a field trip to a construction site where foundation work is being laid.

IX. Discuss the advantages and disadvantages of the different types of floor systems.

X. Provide samples of foundation drawings.

XI. Discuss common problems encountered when drawing foundation plans.

XII. Give test.

INSTRUCTIONAL MATERIALS

I. Included in this unit:

A. Objective sheet

B. Information sheet

C. Transparency masters

1. TM 1--Types of Footing Systems
2. TM 2--Crawl Space Footing Details
3. TM 3--Crawl Space Footing Details (Continued)
4. TM 4--Crawl Space Footing Details (Continued)
5. TM 5--Crawl Space Footing Details (Continued)

6. TM 6--Slab Floor Footing Details
7. TM 7--Slab Floor Footing Details (Continued)
8. TM 8--Slab Floor Footing Details (Continued)
9. TM 9--Waterproofing Foundation Systems
10. TM 10--Termite Protection
11. TM 11--Foundation Breakage Conditions
12. TM 12--Reinforcing Materials
13. TM 13--Footing Design
14. TM 14--Typical Live and Dead Loads for a Frame House
15. TM 15--Live and Dead Loads for a Residence

D. Assignment sheets

1. Assignment Sheet #1--Calculate the Footing Requirements for a Typical One-Story Frame House
2. Assignment Sheet #2--Calculate Pier or Column Footing Requirements
3. Assignment Sheet #3--Draw a Foundation Plan
4. Assignment Sheet #4--Detail a Foundation Section

E. Test

F. Answers to test

II. References

A. Wyatt, William E. *General Architectural Drawing.* Peoria, IL 61614: Charles A. Bennett Co., Inc., 1969.

B. Arnell, Alvin. *Standard Graphical Symbols.* New York: McGraw-Hill Book Co., 1963.

C. Goodban, William T. and Jack J. Hayslett. *Architectural Drawing and Planning.* St. Louis: Gregg Division/McGraw-Hill Book Co., 1979.

D. Hepler, Donald E. and Paul I Wallach. *Architecture Drafting and Design.* St. Louis: Gregg Division/McGraw-Hill Book Co., 1977.

E. Hornung, William J. *Architectural Drafting.* Englewood Cliffs, NJ: Prentice-Hall, Inc., 1966.

F. *HUD Minimum Property Standards.* Washington, D. C.: U. S. Department of Housing and Urban Development, 1973.

G. Kicklighter, Clois E. and Ronald J. Baird. *Architecture Residential Drawing and Design*. South Holland, IL 60473: Goodheart-Willcox Co., Inc., 1973.

H. *Manual of Acceptable Practices to the HUD Minimum Property Standards*. Washington, D. C.: U. S. Department of Housing and Urban Development, 1973.

I. Obermeyer, Thomas. *Architectural Technology*. St. Louis: Gregg Division/ McGraw-Hill Book Co., 1976.

J. Ramsey, Charles G. and Harold R. Sleeper. *Architectural Graphic Standards*. New York: John Wiley & Sons, Inc., 1970.

K. Sleeper, Harold R. *Architectural Specifications*. New York: John Wiley & Sons, Inc., 1967.

L. Spence, William P. *Architecture Design · Engineering · Drawing*. Bloomington, IL: McKnight Publishing Company, 1979.

M. Stegman, George K. and Harry J. Stegman. *Architectural Drafting*. Chicago 60637: American Technical Society, 1974.

N. Wakita, Osamu A. and Richard M. Linde. *The Professional Practice of Architectural Detailing*. New York: John Wiley & Sons, Inc., 1970.

FOUNDATIONS
UNIT VIII

INFORMATION SHEET

I. Terms and definitions

A. Foundation plan--Drawing which shows the details and location of all concrete footings, piers, columns, foundation walls, and supporting beams of a building

B. Foundation--The supporting portion of a building including the footings

C. Stem wall--That part of the house which extends from the first floor to the footing

(NOTE: This is called the foundation wall.)

D. Frost line--The depth to which the soil freezes

E. Bearing capacity--The amount of weight soils can resist calculated in pounds per square foot

F. Grade--The level of the soil around the structure

G. Compacted fill--Soil brought to the building site which is mechanically compacted to insure proper weight-bearing capacity

H. Uncompacted fill--Soil brought to the building site used to raise the level of the grade

I. Cut--The removal of soil from a known level

J. Footing--A masonry section designed to distribute the weight of the structure to the ground or soil

K. Key--A groove in a footing of a two-pour concrete system to eliminate possible movement of foundation wall after pour

L. Stepped footing--The base of the footing rises or lowers as the grade requires while maintaining a constant depth below grade

M. Pier--A masonry or poured concrete pillar usually below a building to support the floor framing

N. Column--A wood or metal post with a footing used to support a beam

(NOTE: If wood is used, it should be pressure treated wood.)

O. Beam--A structural member transversely supporting a load

P. Grade beam--A poured concrete foundation wall beam that spans piling or piers

(NOTE: This is used in areas where soil cannot support footings at the usual depth.)

INFORMATION SHEET

Q. Girder--A large or principal horizontal structural member used to support the ends of floor joists and beams

R. Pilaster--A masonry unit used to support the ends of beams or stiffen a foundation wall

S. Piling--A foundation system consisting of steel, timber, or concrete driven vertically into the ground to stable soil or rock

T. Concrete slab--A concrete floor on grade that can be unreinforced or reinforced supported by a foundation or independent from a foundation

U. Monolithic slab--Where the slab and foundation are poured at the same time

V. Reinforcing--The process of including additional materials to strengthen the concrete

W. Rebar--A reinforcing bar placed in concrete to provide resistance to tensile stresses or breakage

(NOTE: Rebars are manufactured in plain and deformed shapes and call outs are interpreted in 1/8" intervals.)

X. Dowels--Reinforcing bars used to hold together two different pours of concrete

Y. Anchor bolt--A threaded rod inserted in masonry construction to attach sill plate to foundation wall

Z. Waterproofing--The process of applying materials to basement walls, foundation walls, or underside of concrete slab to repel moisture

AA. Crawl space--The space below the floor of a building built above the ground

BB. Corbelled brick--Method where exterior masonry veneer walls may extend 1" past or outside a foundation

CC. Poche--Process of shading in the area to be emphasized

DD. Chase--A slot or groove built in a masonry wall to provide space for ducts, pipes, or conduits

EE. Expansion joint--A separation in a masonry or concrete wall or concrete floor to provide room for expansion due to temperature and moisture changes

FF. Pressure treated wood (PTW)--Wood impregnated with toxic chemicals . elevated pressures and temperatures to eliminate decay

INFORMATION SHEET

II. Abbreviations used on foundation plans and details

American Concrete Institute	ACI	Footing	FTG
Anchor bolt	AB	Foundation	FDN
At	@	Galvanized	GALV
Basement	BSMT	Gauge	GA
Beam	BMS	Grade	GR
Block	BLK	Header	HDR
Bottom	BOT	Insulation	INS
Building	BLDG	Interior	INT
Center to center	C to C	Joist	JST
Column	COL	Minimum	MIN
Concrete	CONC	On center	OC
Concrete block	CONC BK	Plywood	PLY
Diameter	ϕ	Pounds per sq. ft.	PSF
Douglas fir pressure treated	DFPT	Pounds per sq. in.	PSI
Excavate	EXC	Reinforce	REINF
Exterior	EXT	Reinforcing bar	REBAR
Finish	FIN	Welded wire fabric	WWF
Floor	FL	With	w/

III. Types of floor systems

A. Concrete slab

B. Supported (wood) floor

IV. Advantages and disadvantages of wood foundations

A. Advantages

1. Costs less to build
2. Requires less excavation
3. Saves time in construction

INFORMATION SHEET

B. Disadvantages

1. Should not be used in wet climates
2. Requires special treated wood

V. Types of footing systems (Transparency 1)

A. Pier with post

B. Pier with column

C. Grade beam - one pour

D. Grade beam with pile

E. Spread

F. Interior - one pour

G. Interior - two pour

VI. Typical crawl space footing detail drawings (Transparencies 2, 3, 4, and 5)

A. Grade beam

B. Masonry foundation wall

C. Typical pier detail

D. Exterior bearing footing

E. Porch connection

F. Wood foundation detail

G. Basement wood foundation detail

VII. Typical slab floor-footing detail drawings (Transparencies 6, 7, and 8)

A. Footing @ veneer

B. Grade beam @ veneer

C. Interior bearing footing

D. Exterior bearing footing

E. Porch connection

F. Garage @ apron

INFORMATION SHEET

VIII. Methods of waterproofing the foundation wall and concrete slab (Transparency 9)

A. Waterproof materials

B. Drain tile

C. Chemicals in concrete

D. Pipe mastic

IX. Methods of protecting a structure from termites (Transparency 10)

A. Treated wood

(NOTE: These include pressure treated wood, redwood, and cedar.)

B. Soil treatment

(NOTE: If federal, state, and local regulations permit soil treatment, refer to *Minimum Property Standards,* Table 5-2.1.)

C. Crawl space ventilation

(NOTE: Refer to *Minimum Property Standards*, Table 4-3.1.)

D. Termite shield

(NOTE: This is usually 26 ga. galv. metal.)

X. Methods of preventing breakage of foundations and concrete slabs (Transparencies 11 and 12)

A. Reinforcing

(NOTE: This involves the use of reinforcing bars in foundation and mesh in concrete slab.)

B. Sand bed

(NOTE: This is used for expansive soil.)

C. Fiber inserts

(NOTE: These are used only under grade beams.)

D. Footing placed below frost line

XI. Designing and constructing a footing (Transparency 13)

A. The concrete should be poured continuously; no load should be placed on a footing until the concrete has thoroughly set up

B. If a footing trench is dug too deeply, the excess space should be filled with concrete

INFORMATION SHEET

C. Footings can be poured in earth trenches without side forms if the soil is firm enough to retain its shape

D. Footing width should be designed to support with safety the load to be placed upon it

E. Footings should be protected from freezing

F. In residential construction, a footing should never be less than 6" (152 mm) thick

G. Footing thickness should never be less than one and one-half times the projection of the footing from the foundation

H. The thickness-to-width ratio of a footing should be kept close to 2 to 1 if footing projection exceeds one half the width of the foundation thickness

I. The bearing area of flared footing is figured the same way as for spread footings

J. The slope of a flared footing should not be less than 60° from the normal degree of slope grade

K. A stepped footing vertical distance should not be higher than 3/4 of the horizontal distance between steps

L. A stepped footing horizontal distance between steps should not be less than 2'-0" (610 mm)

M. A stepped footing horizontal and vertical steps should be poured at the same time

N. A key should be used for a two-pour foundation system

XII. Designing piling and grade beams

A. Each pier and column footing loading should be figured separately

B. Pier or column footing thickness is 8" (Transparency 13)

(NOTE: 2'-0" X 2'-0" is a common size for residential construction.)

C. Piling should be spaced 8'-0" on center maximum, at least 10" in diameter, and have a bearing area of 2 square feet for average soil

D. Piling should have one No. 5 bar running full length into grade beam

E. Grade beam for frame construction should be at least 6" wide by 14" high

F. Grade beam for masonry and masonry veneer construction should be 8" wide by 14" high

G. Grade beam should have four No. 5, steel bars for masonry and masonry veneer construction or four No. 4 steel bars for frame construction

INFORMATION SHEET

XIII. Designing a slab foundation system

A. Slab on ground construction should not be attempted in areas having ground water or a hydrostatic pressure condition near the ground surface

B. The site should be graded so water cannot collect beneath the slab

C. Perimeter insulation should be used, except in areas where freezing weather seldom occurs

(NOTE: Refer to *Minimum Property Standards,* Table 6-7.3 or manufacturer's design data.)

D. The slab should be poured continuously if possible

E. Concrete should be allowed to develop top strength before being subjected to a load

F. The minimum floor slab should be 4" (102 mm) thick

G. Metal heating coils and reinforcement should be covered with at least 1" of concrete

H. Hot air ducts in a slab should be completely encased in at least 2" (51 mm) of concrete, unless they are crush-resistant

I. The top of the floor slab should be at least 8" (203 mm) above finished grade

J. Basement floor slabs and garage floors should be designed according to the requirements set forth for house floor slabs

K. Porch floor slabs should be reinforced if they exceed 3'-6" (1067 mm) in width

XIV. Symbols used in foundation plans and details

Name	Section
A. Brick, Common	
B. Concrete	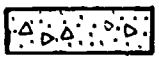
(NOTE: Common use.)	
C. Concrete block	 or 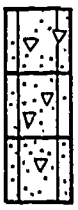

INFORMATION SHEET

D. Earth  or 

E. Insulation:
Batt, loose,
fill-blanket 

F. Rigid insulation 

G. Metal, flashing

H. Gypsum wallboard 

(NOTE: Label drywall on drawings.)

I. Stone, gravel,
porous fill  or 

J. Reinforcing bar  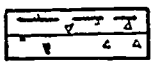

End view Side view

K. Wood, finish 

L. Wood, rough 

M. Wood finish
on stud 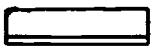

N. Waterproofing
(film)

O. Wire mesh

INFORMATION SHEET

XV. Live and dead loads (Transparencies 14 and 15)

A. Live loads--Those fixed or moving weights which are not a structural part of the house

Examples: Weights of furniture, occupants, snow on the roof, wind

B. Dead loads--Those static or fixed weights of the structure itself

Examples: Weights of roofing, foundation walls, siding, joists

XVI. Preliminary steps to drawing a foundation plan

A. Examine the floor plan to determine the type of exterior walls specified

(NOTE: The type of exterior walls determines the dimension of the foundation. For example, the foundation size will be larger for a brick veneer house than a house with a stud wall structure.)

B. Examine the plot plan and elevation to determine the need for stepped footings, retaining walls, and problems related to grade

C. Determine the size of footings and foundation walls required from information available

D. Check the frost penetration depth for the area where the house is to be built

E. Refer to building codes to be sure that all requirements are met

F. Have a soil bearing test made if soil bearing capacity is questionable

Types of Footing Systems

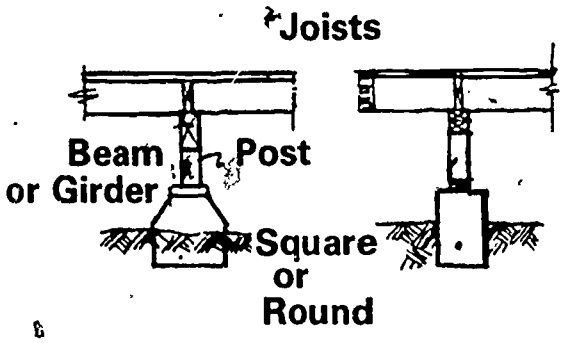

Pier

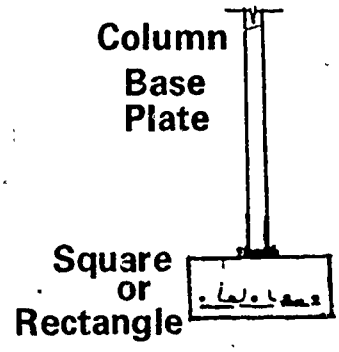

Column

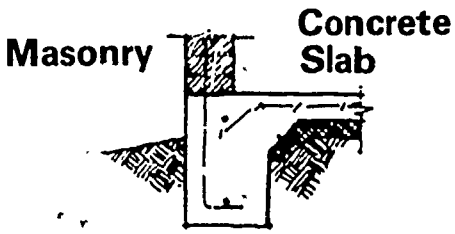

Grade Beam

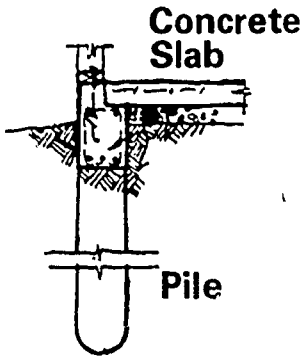

Grade Beam With Pile

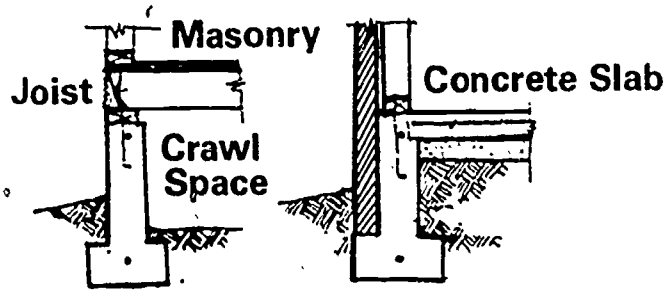

Spread

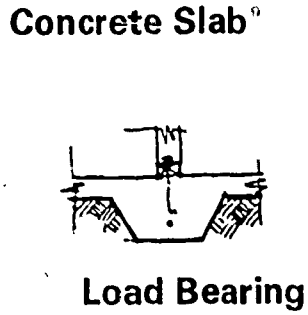

Interior

Crawl Space Footing Details

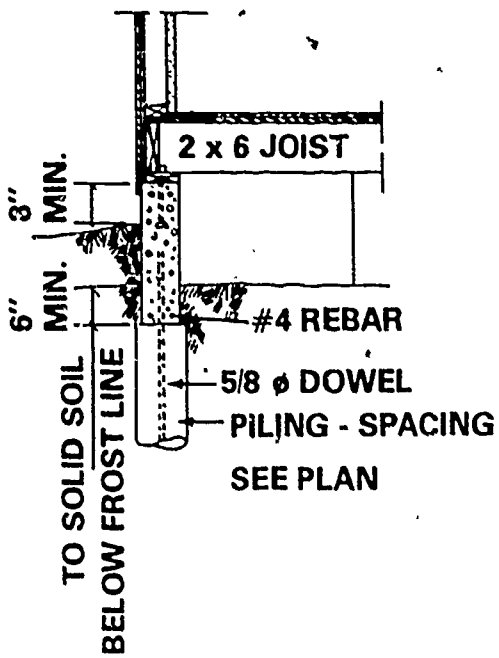

GRADE BEAM

SCALE: 1" = 1'-0"

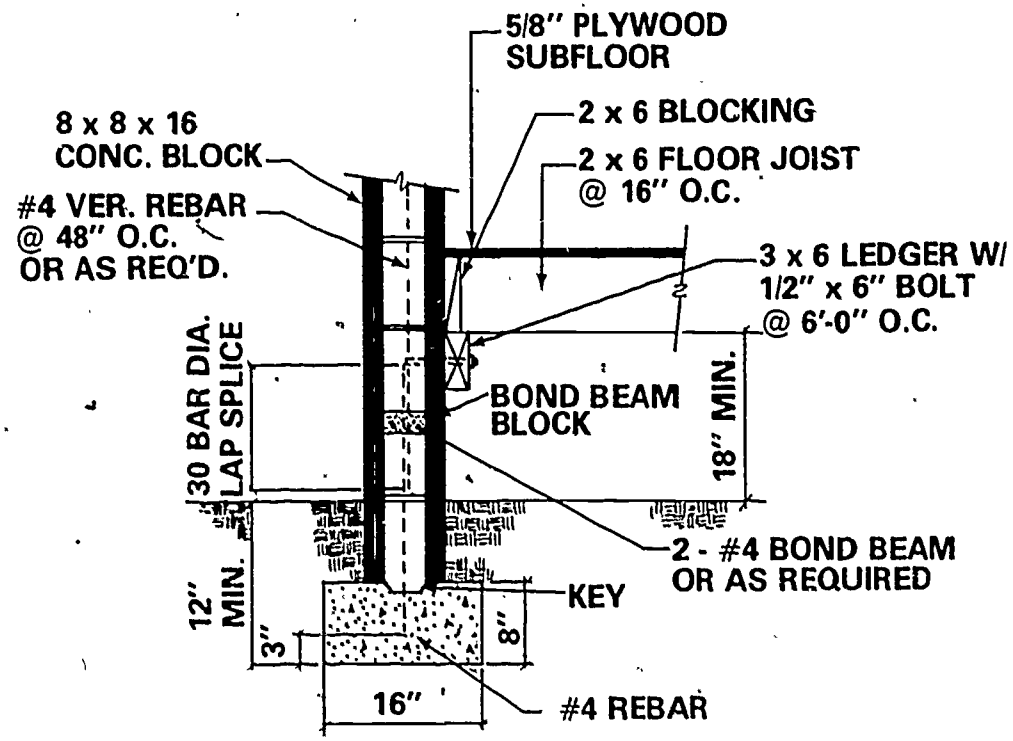

MASONRY FOUNDATION WALL

SCALE: 1" = 1'-0"

Crawl Space Footing Details

(Continued)

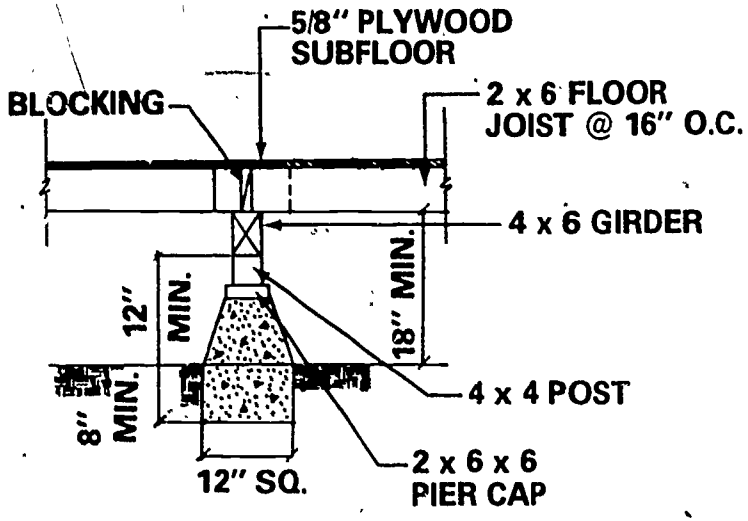

TYPICAL PIER DET.
SCALE: 1" = 1'-0"

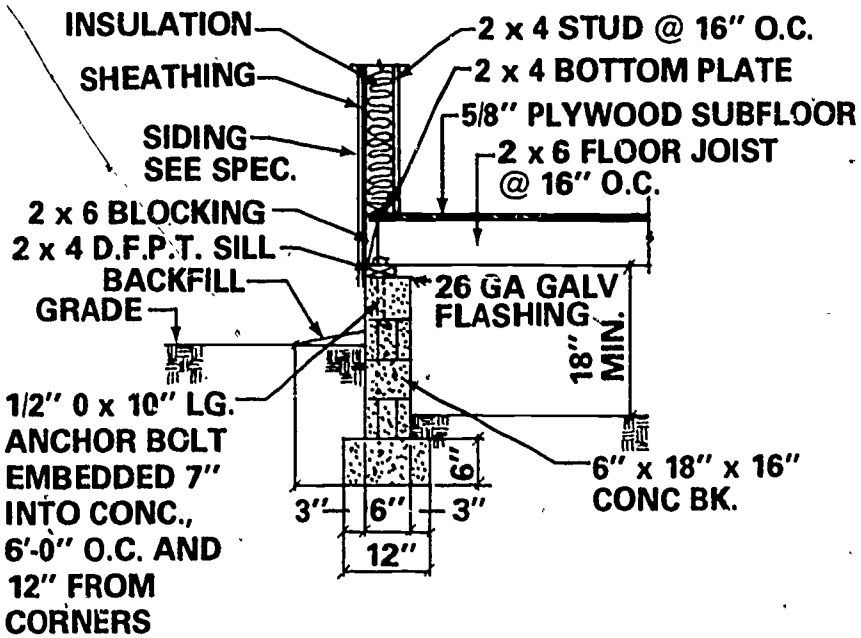

EXTERIOR BEARING FTG.
SCALE: 1" = 1'-0"

Crawl Space Footing Details

(Continued)

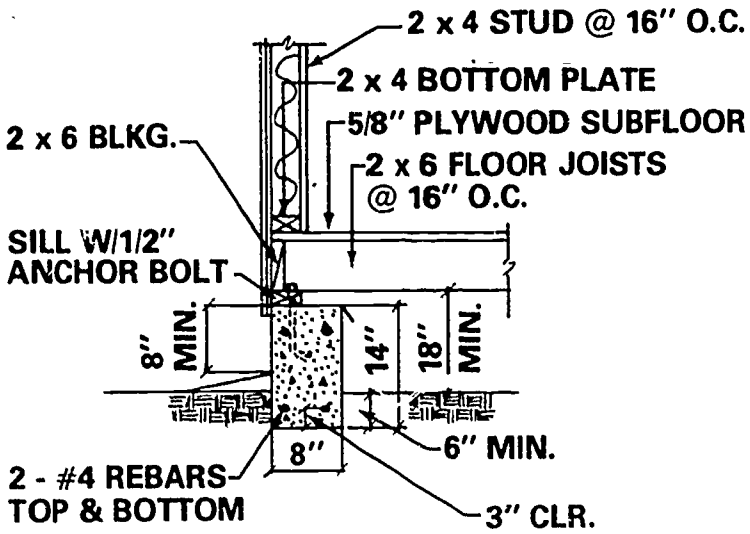

GRADE BEAM

SCALE: 1" = 1'-0"

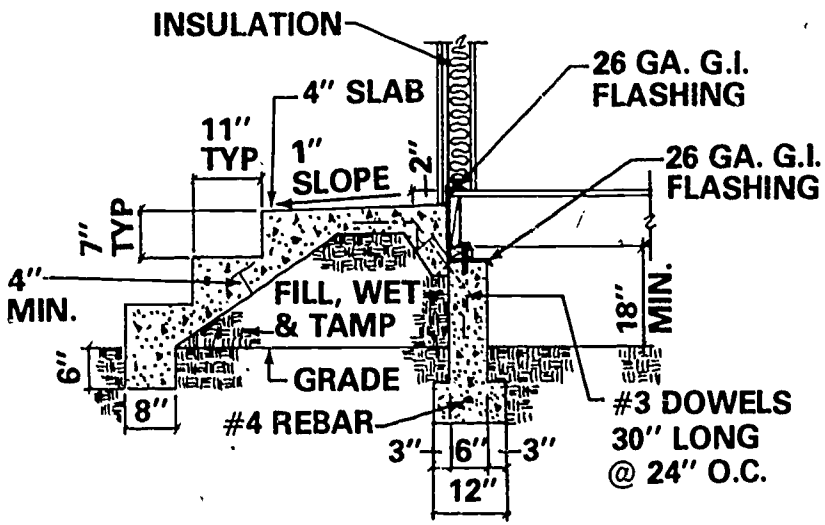

PORCH CONNECTION

SCALE: 1" = 1'-0"

Crawl Space Footing Details

(Continued)

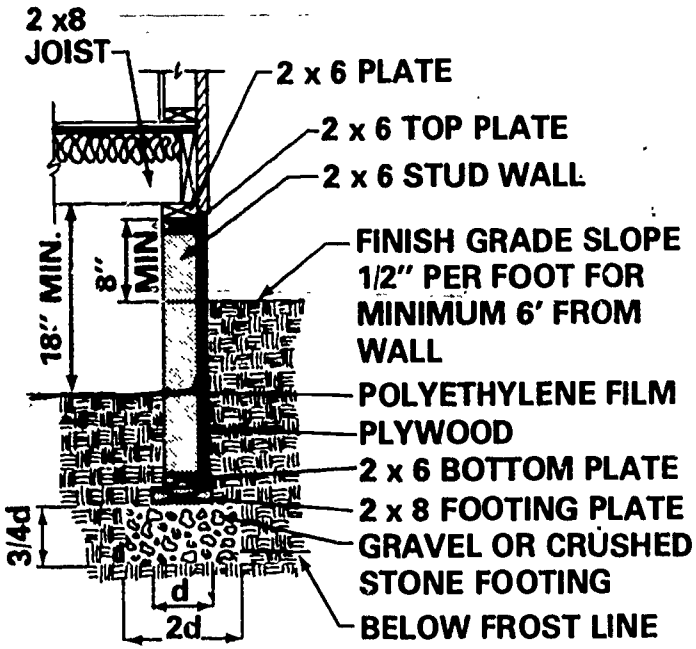

WOOD FDN. DETAIL

SCALE: 1" = 1'-0"

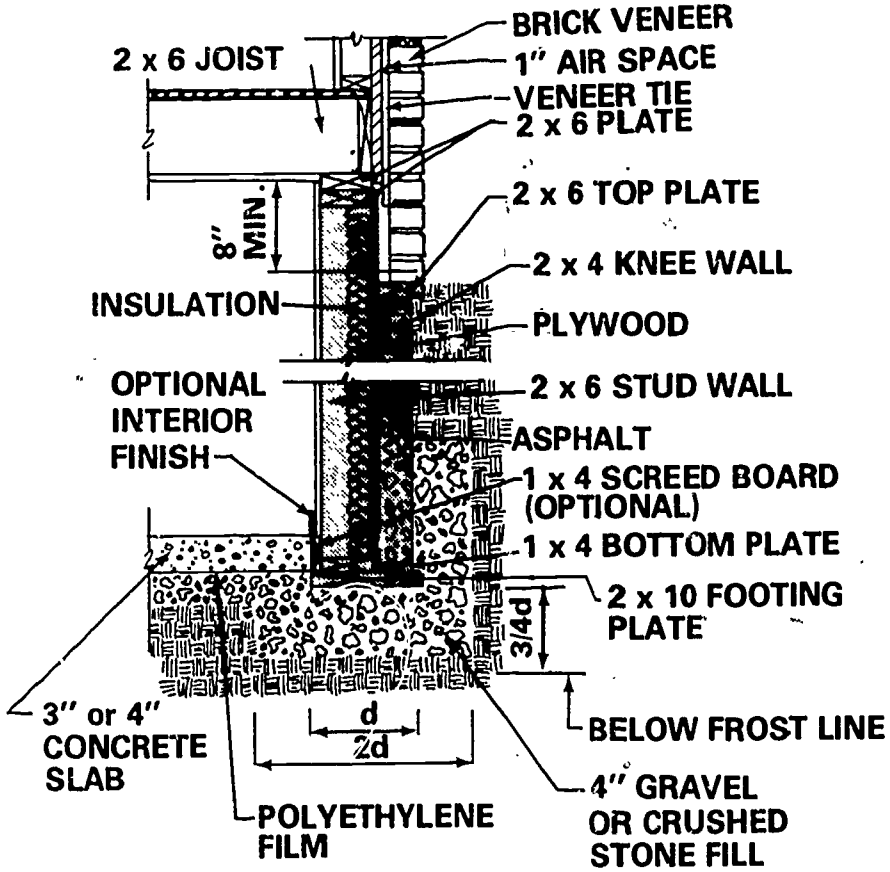

BASEMENT WOOD FDN DETAIL

SCALE: 1" = 1'-0"

Slab Floor Footing Details

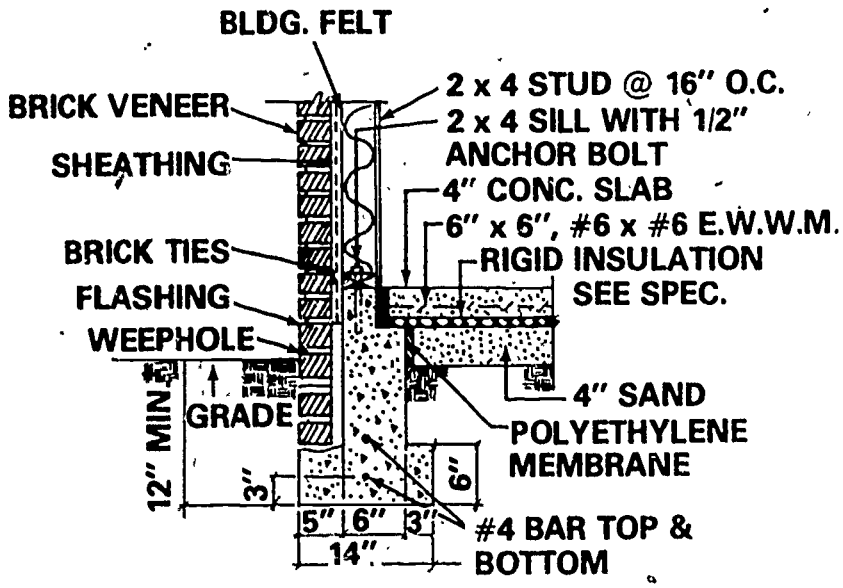

FOOTING @ VENEER

SCALE: 1 1/2" = 1'-0"

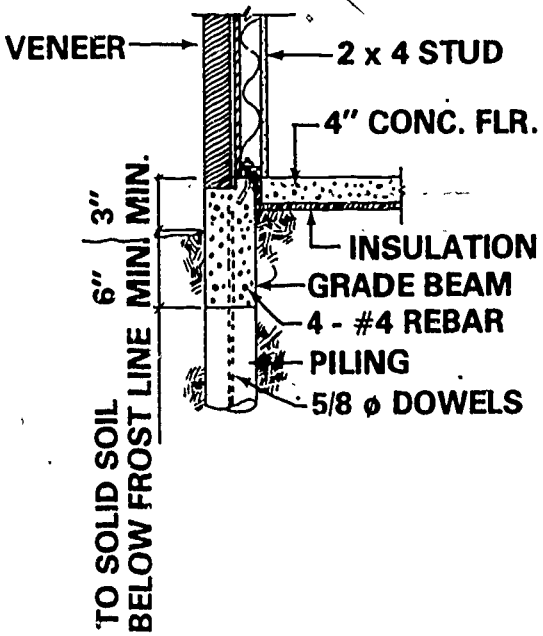

GRADE BEAM @ VENEER

SCALE: 1" = 1'-0"

Slab Floor Footing Details

(Continued)

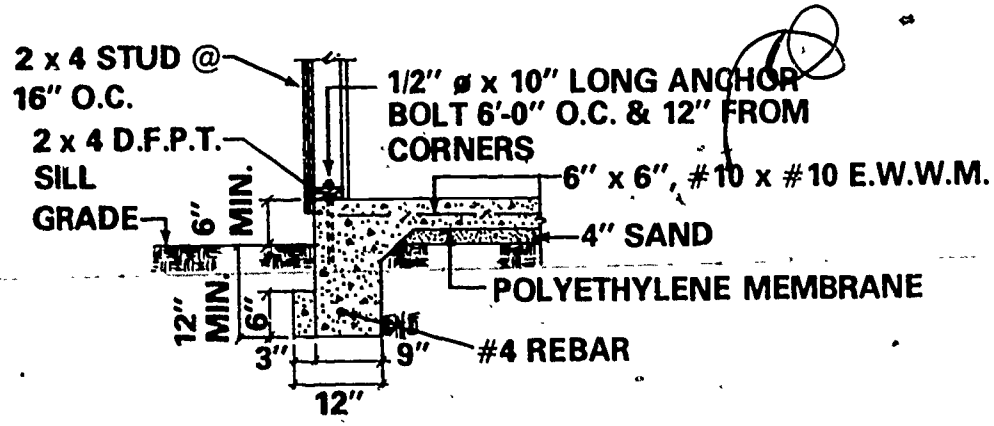

EXT. BEARING FOOTING

SCALE: 1" = 1'-0"

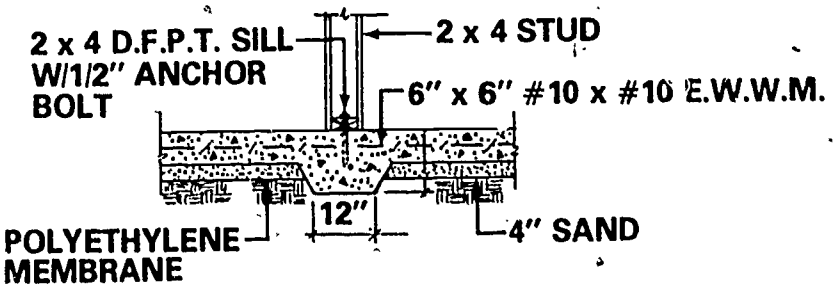

INTERIOR BEARING FTG.

SCALE: 1" = 1'-0"

Slab Floor Footing Details

(Continued)

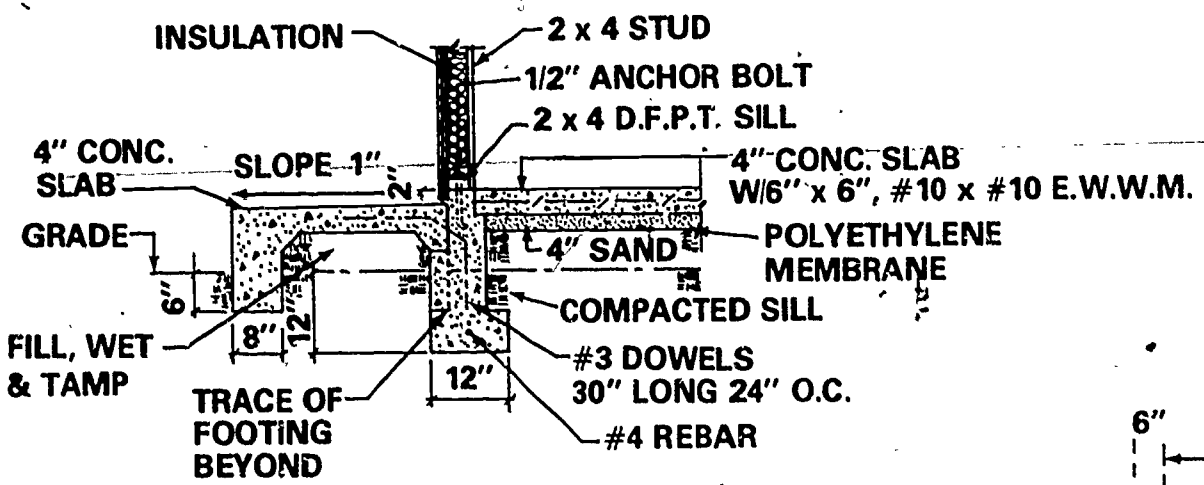

PORCH CONNECTION

SCALE: 1" = 1'-0"

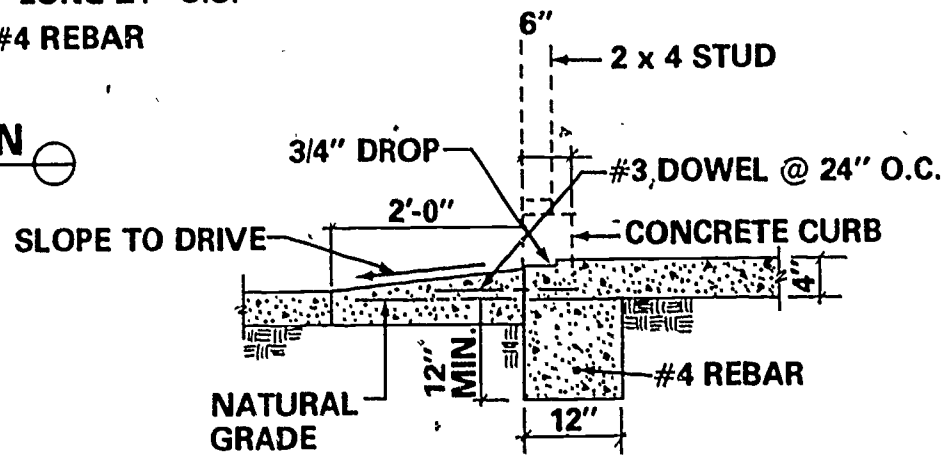

GARAGE @ APRON

SCALE: 1" = 1'-0"

AD-499

TM

Waterproofing Foundation Systems

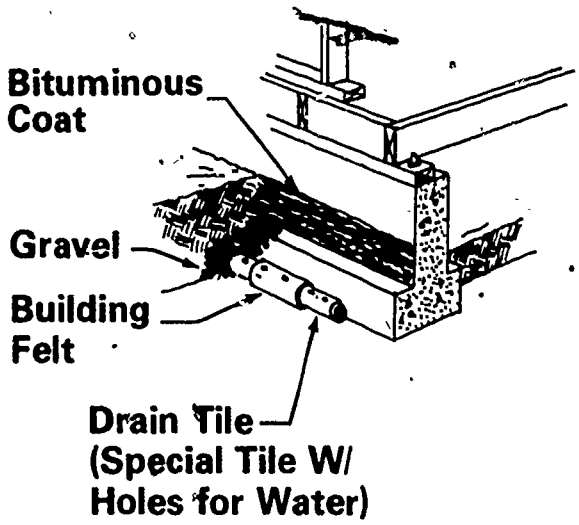

Drain Tile

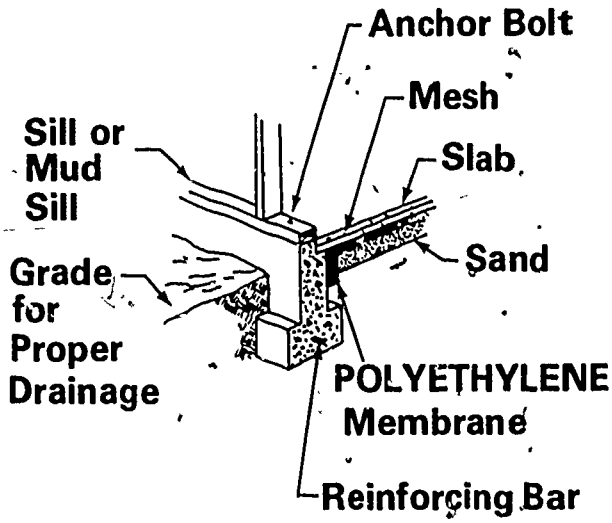

Waterproof Material

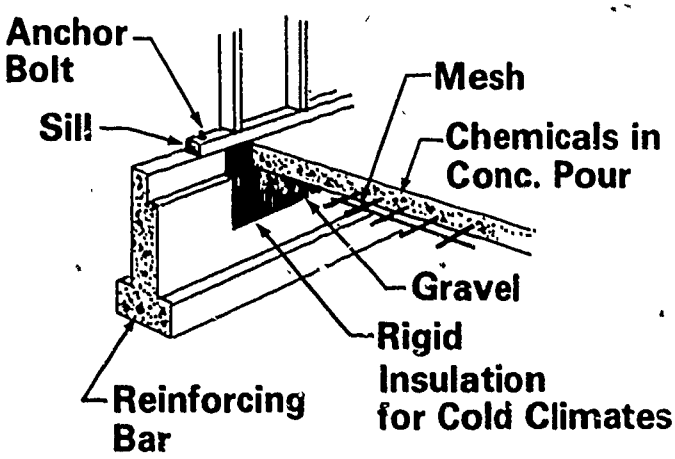

Chemicals

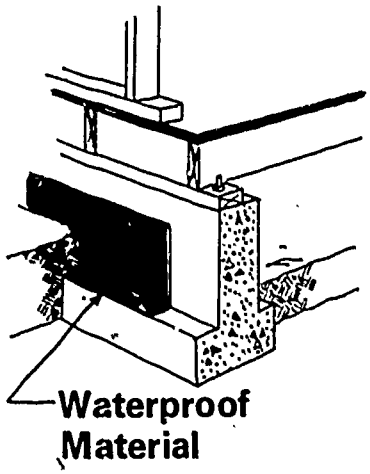

Waterproof Material

Termite Protection

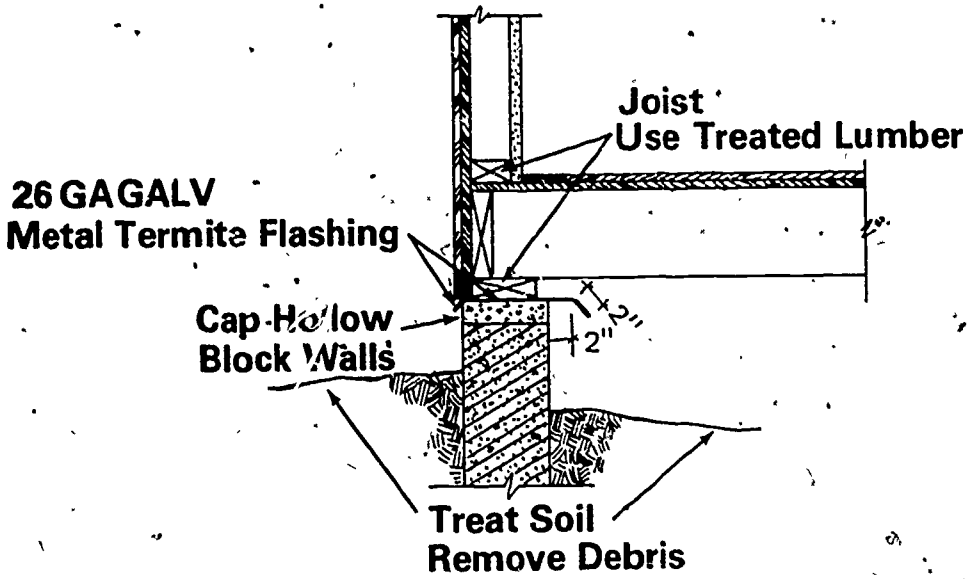

Treated Wood and Soil

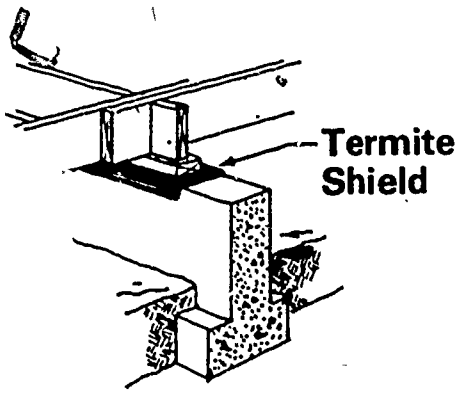

Termite Shield

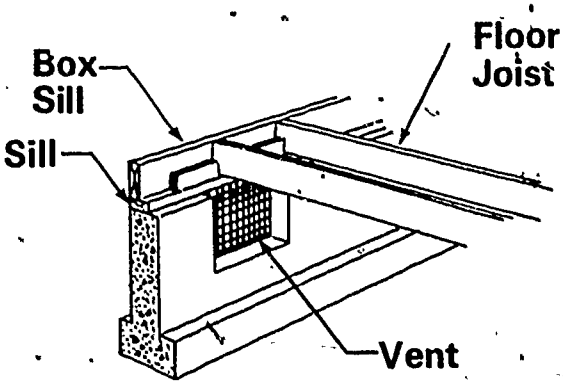

Crawl Space Ventilation

Foundation Breakage Conditions

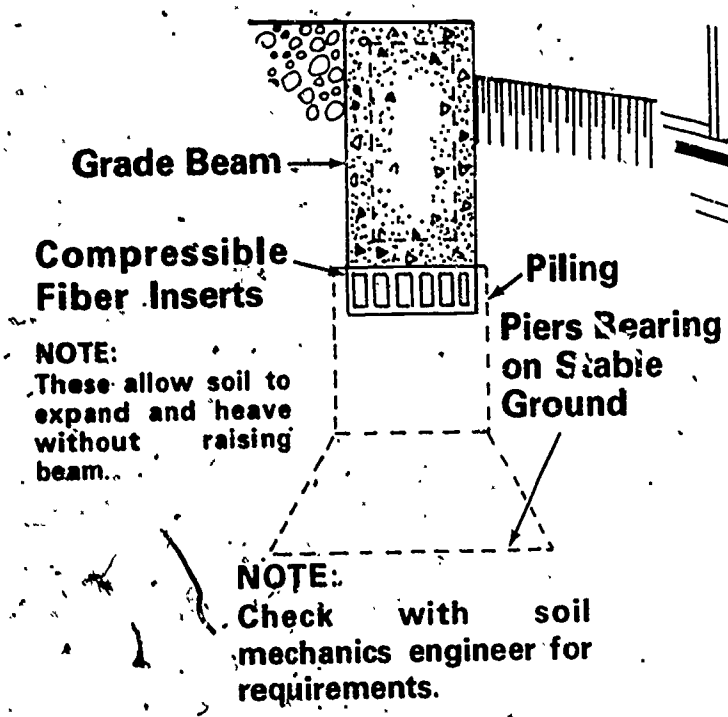

Fiber Inserts

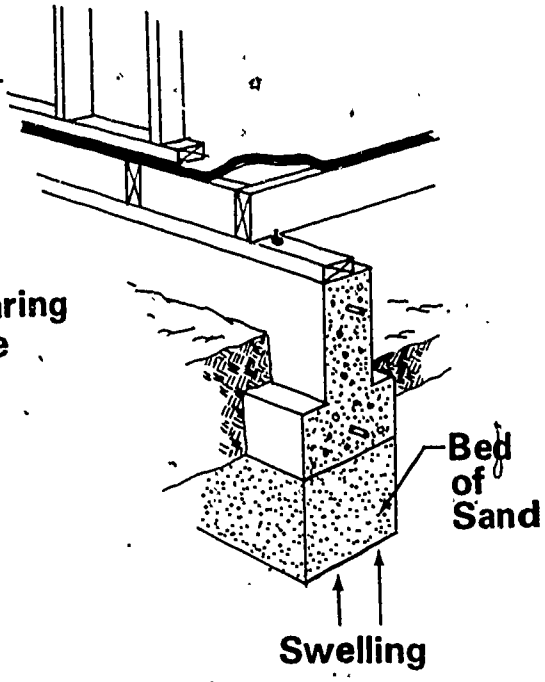

Sand

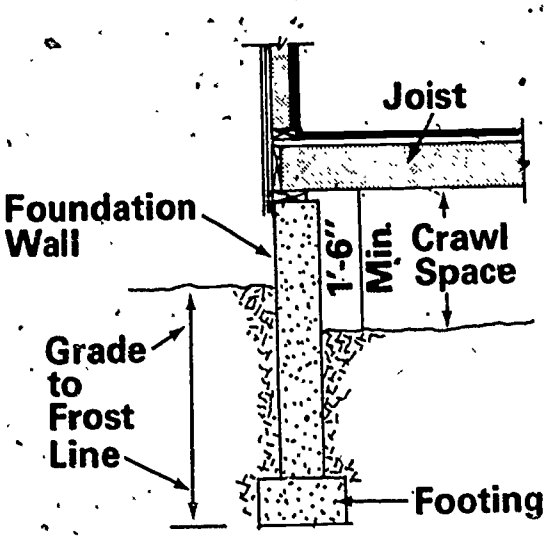

NOTE:
See standards for correct size and quantity.

Frost Line

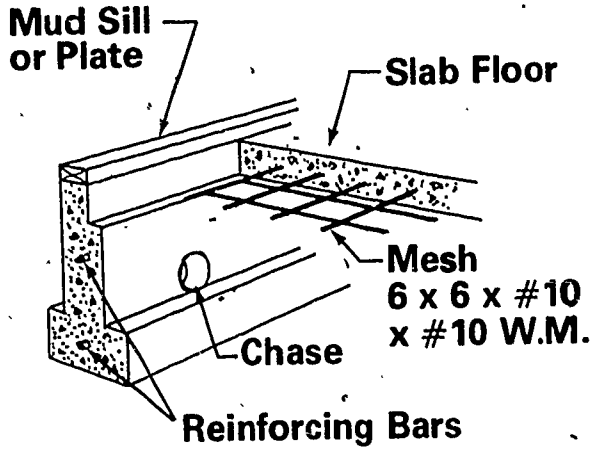

NOTE:
See frost depth chart for depth in your area.

Reinforcing

Reinforcing Materials

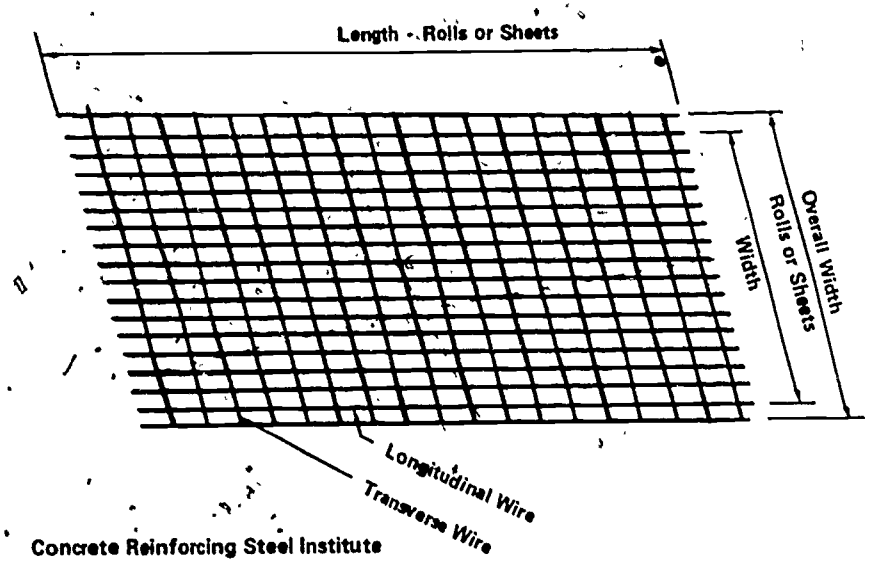

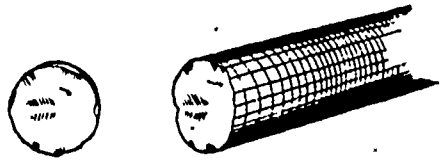

Plain Bar

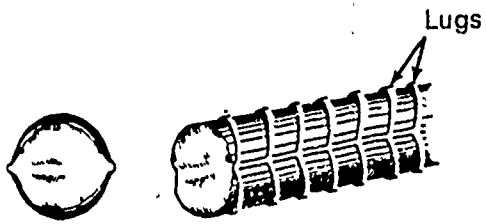

Deformed Bar

Common Stock Styles of Welded Wire Fabric

Style Designation		Spacing Of Wires, in.		Weight lbs. per 100 sq. ft.
Old Designation (By Steel Wire Gage)	New Designation (By W-Number)	Longit.	Transv.	
6x6—10x10	6x6—W1.4xW1.4	6	6	21
6x6—8x8	6x6—W2.1xW2.1	6	6	30
6x6—6x6	6x6—W2.9xW2.9	6	6	42
6x6—4x4	6x6—W4xW4	6	6	58
4x4—10x10	4x4—W1.4xW1.4	4	4	31
4x4—8x8	4x4—W2.1xW2.1	4	4	44
4x4—6x6	4x4—W2.9xW2.9	4	4	62
4x4—4x4	4x4—W4xW4	4	4	85

ASTM Standard Reinforcing Bars

Bar Size	Bar Designation Number	Nominal Weight, lb. per ft.	Nominal Dimensions	
			Diameter, in.	Cross-Sectional Area, sq. in.
3/8" o	3	0.376	0.375	0.11
1/2" o	4	0.668	0.500	0.20
5/8" o	5	1.043	0.625	0.31
3/4" o	6	1.502	0.750	0.44
7/8" o	7	2.044	0.875	0.60
1" o	8	2.670	1.000	0.79
1 1/8" o	9	3.400	1.128	1.00
1 1/4" o	10	4.303	1.270	1.27
1 3/8" o	11	5.313	1.410	1.56

TM

AD-507

Footing Design

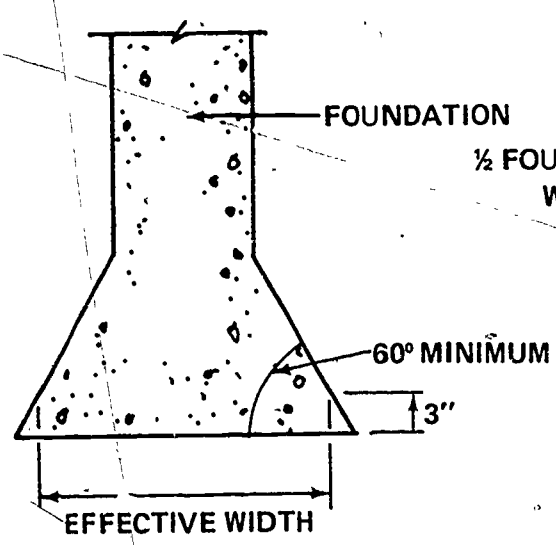

Flared Footing

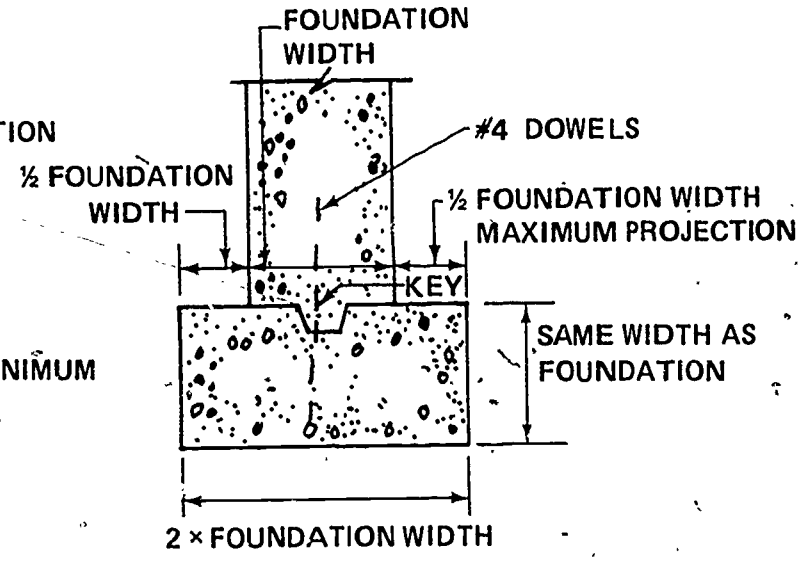

Spread Footing

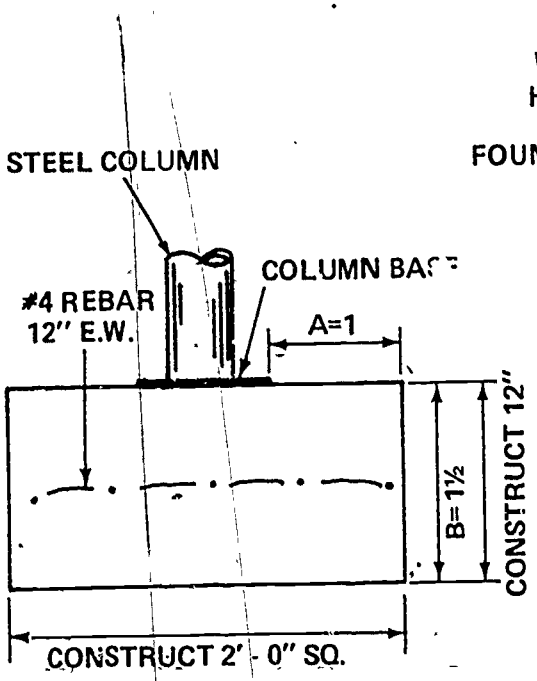

Column Footing

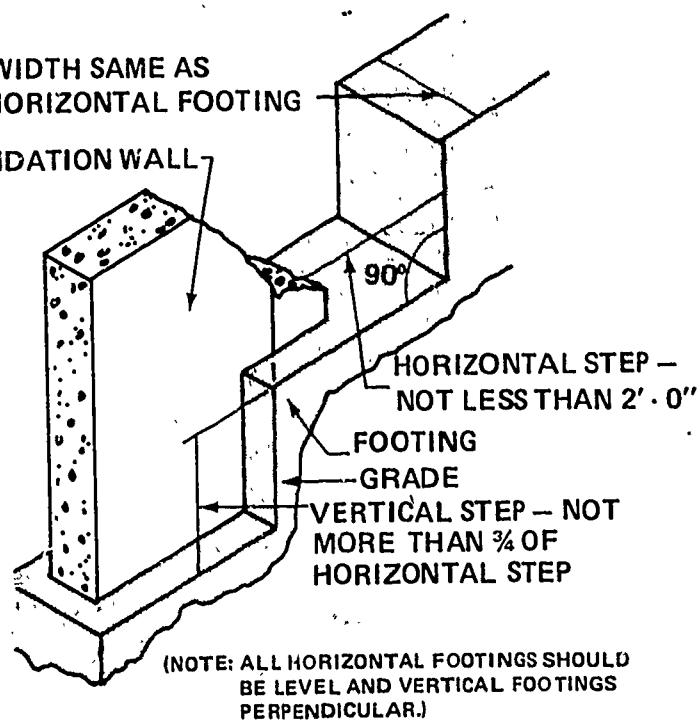

Stepped Footing

Typical Live and Dead Loads for a Frame House

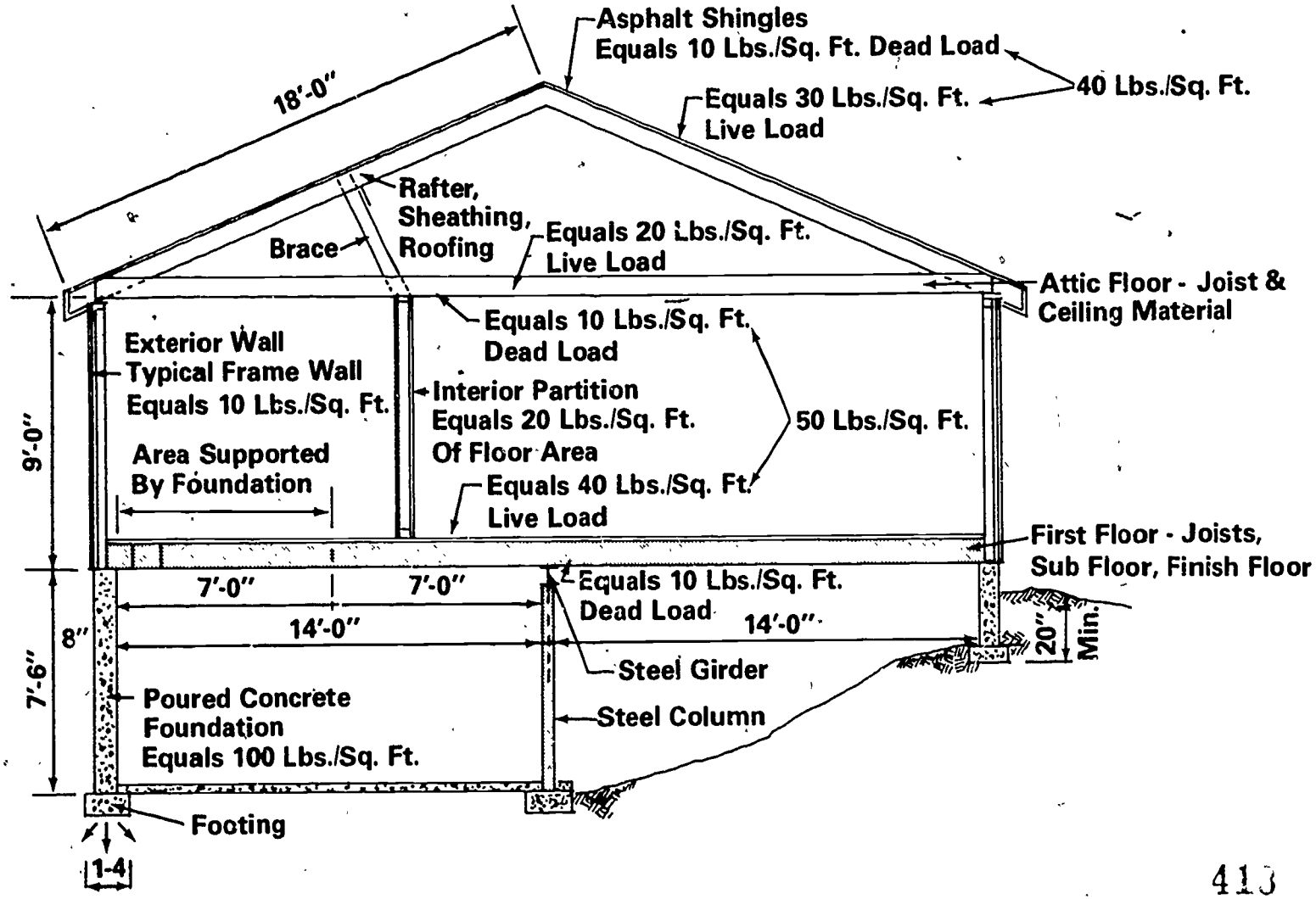

Live and Dead Loads for a Residence

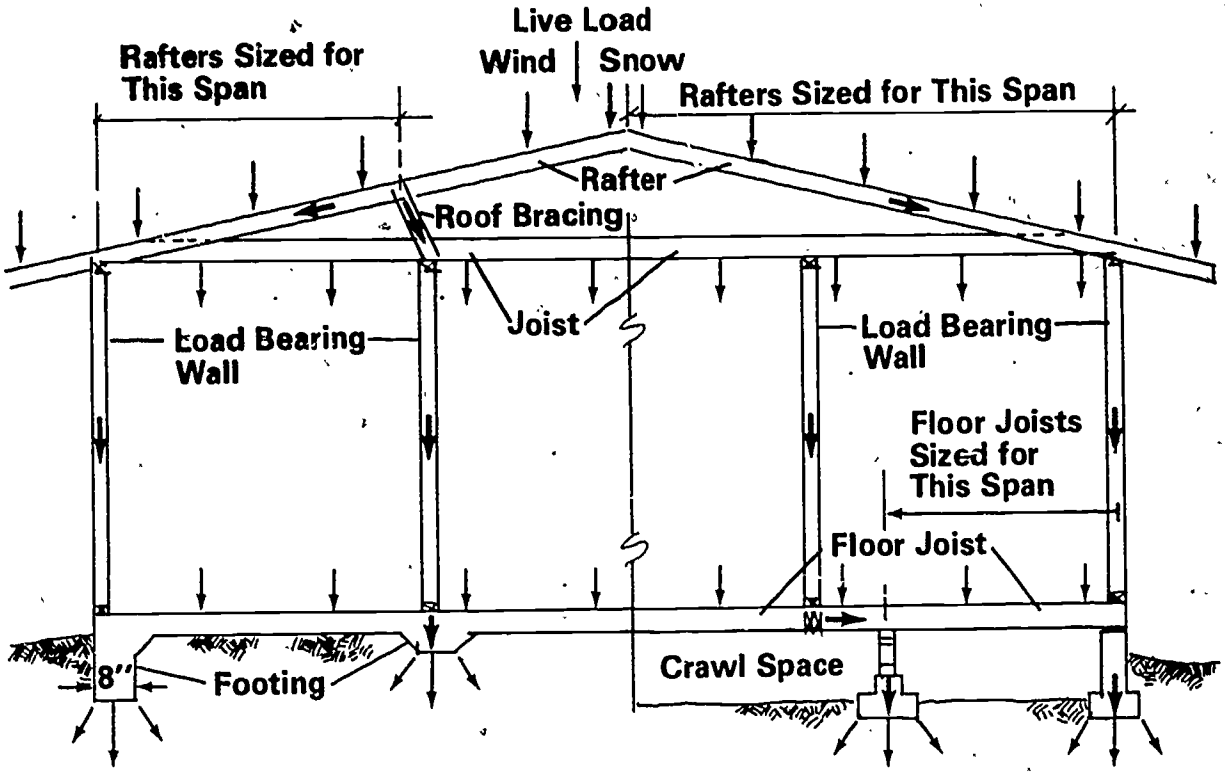

Concrete Slab Floor

Wood Frame Floor

NOTE: Arrows Indicate Direction Loads Flow

TM 15

FOUNDATIONS
UNIT VIII

ASSIGNMENT SHEET #1--CALCULATE THE FOOTING REQUIREMENTS FOR A TYPICAL ONE-STORY FRAME HOUSE

Introduction: A footing must provide support for the house without excessive settlement or movement to eliminate cracks in the structure. The footing is made to certain specifications and detailed according to the amount of weight the soil can support and the weight of the structure to be placed on the footing. The tables shown are for calculation of following example only. Refer to a standards book for exact data for your problems.

Example Problem: Calculate the footing requirements for a one-story frame house with roofing material of asphalt shingles, partial basement, bearing soil of hard clay, and located in Oklahoma City (Figure 1 and Tables 1, 2, and 3)

Example Solution:

TABLE 1

Average Weights of Conventional Construction Materials

Material	Weight PSF
Concrete wall, 8"	100
Concrete wall, 10"	125
Concrete wall, 12"	150
Concrete block wall, 6"	40
Concrete block wall, 8"	55
Concrete block wall, 12"	80
Brick wall, 4"	35
Brick wall, 8"	74
Brick veneer (4") over frame wall	45
Brick veneer (4") over 4" concrete block wall	65
Typical frame exterior wall with 4" studs	10
Roof, wood or asphalt shingles	10
Roof, asbestos slate	12
Roof, 3/16" slate	15
Roof, 3/8" slate	22
Roof, tar and gravel	15
Interior partitions (per square foot of floor area)	20

NOTE: Other weights can be obtained from a standards book.

ASSIGNMENT SHEET #1

TABLE 2

Live and Dead Loads

Design Factor	Live Load PSF	Dead Load PSF
Floors of rooms used for sleeping area	30	10
Floors of rooms other than sleeping	40	10
Floors with ceiling attached below	—	10
Ceiling joists with limited attic storage	20	10
Ceiling joists with no attic storage	5	10
Ceiling joists if attic rooms are used	30	10
Roof rafters with roof slope less than 3 in 12	20	see roof mat.
Roof rafters with roof slope over 3 in 12	15	see roof mat.

TABLE 3

Soil Classification	Bearing Value, PSF
ROCK	5000
SAND	
Coarse compact	1500
Fine compact	1000
Fine loose	500
CLAY	
Hard	3000
Sandy	2000
Soft	1000
ADOBE	1000
SILT	
Dry	500

NOTE: It is best to have a soil engineer investigate and supply a geological data of the soil.

Frost Depth in Inches

FIGURE 1

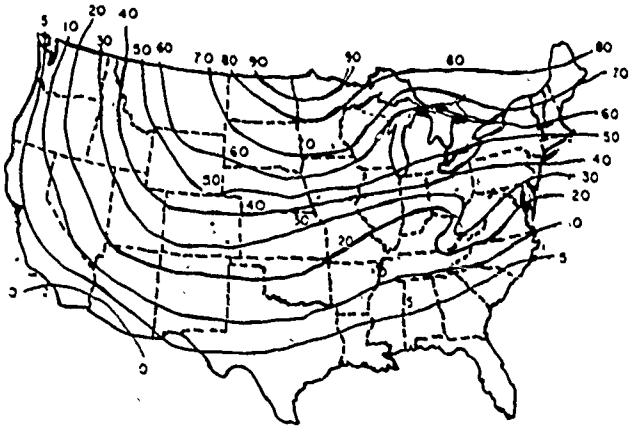

ASSIGNMENT SHEET #1

1. Calculate the foundation wall height

   a. Frost depth for Oklahoma City is 20" (Figure 1)

   b. Footing thickness must be same as wall; this equals 8"

   (NOTE: Minimum wall thickness according to *HUD MPS* is 6"-8"; this example will use 8".)

   c. Floor line should be 8" above grade; 20" frost depth and 8" footing thickness = 12" + 8" above grade = 20" foundation wall height (Figure 2)

   (NOTE: This procedure is used for slab floors and crawl space floors only.)

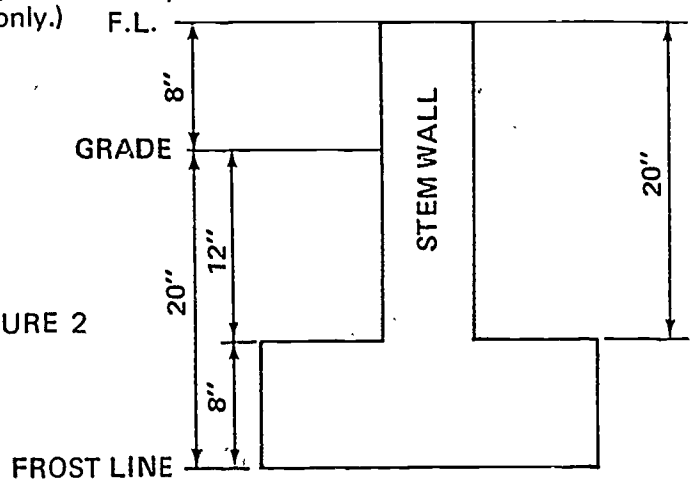

FIGURE 2

2. Calculate foundation wall material load (Transparencies 14 and 15)

   7'-6" high X 1'-0" (linear foot) section = 7.5 square feet X 100 PSF for 8" concrete wall = 750 total pounds (Figure 3)

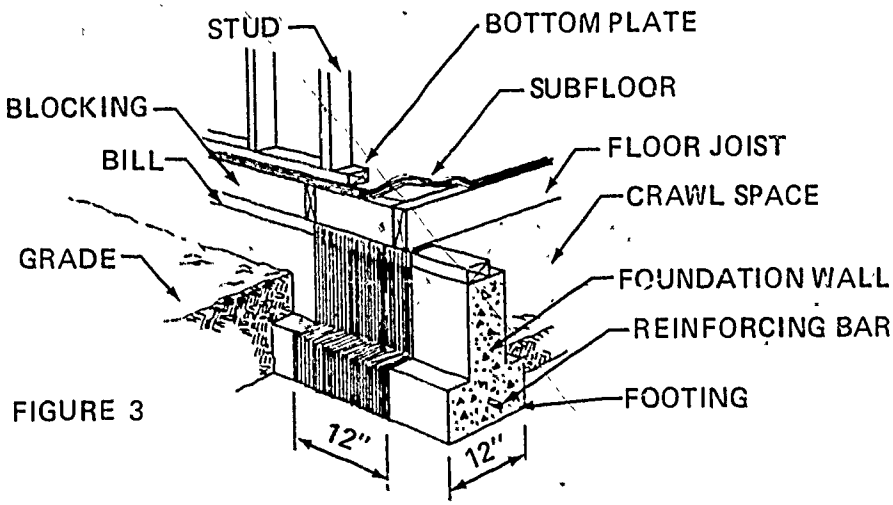

FIGURE 3

ASSIGNMENT SHEET #1

3. Calculate first floor live and dead load

   1'-0" (linear foot) wide X 7'-0" long floor (half span distance) = 7.0 square feet X 50 PSF dead-live load = 350 total pounds

4. Calculate attic floor load.

   1'-0" (linear foot) wide X 7'-0" (half span distance) long attic floor = 7.0 square feet X 30 PSF live load on ceiling joist = 210 total pounds

5. Calculate roof load

   1'-0" (linear foot) wide X 18'-0" rafter length = 18 square feet X 40 PSF live-dead with asphalt shingles = 720 total pounds

   (NOTE: Check local codes for your location due to variation of live loads.)

6. Calculate exterior wall load

   1'-0" wide X 9'-0" high = 9 square feet X 10 PSF = 90 total pounds

7. Calculate partition wall load

   1'-0" wide X 7'-0" (half span) long = 7.0 square feet X 20 PSF = 140 total pounds

   (NOTE: This calculation is not used for slab floor construction with interior walls used as load bearing.)

8. Add total weights

Foundation	750 PSF
First floor	350 PSF
Attic floor	210 PSF
Roof	720 PSF
Exterior wall	90 PSF
Partitions	140 PSF
Total load	2260 pounds for each linear foot of foundation

9. Check total pounds of foundation load with bearing load of hard clay

   Hard clay = 3000 PSF
   Design footing 1'-4" wide X 1'-0" long = 1.4 sq. ft. X 3000 = 4200 PSF
   Total design load less than soil capacity

ASSIGNMENT SHEET #1

Directions: Using data given and standards, calculate the footing requirements for a one-story house.

Problems:

A. 1. 30'-0" wide house

2. 4" brick veneer over 4" frame wall

3. Interior load bearing partition is 15'-0" from outside wall

4. 5/12 pitch with 16'-3" long rafters with wood shingles

(NOTE: For calculating rafter lengths, see Unit V, "Structural Systems.")

5. Location: Bismarck, North Dakota.

B. Calculate the footing requirements for a one-story house as assigned by instructor.

(NOTE: This may be for your design project.)

FOUNDATIONS
UNIT VIII

ASSIGNMENT SHEET #2--CALCULATE PIER OR COLUMN FOOTING REQUIREMENTS

Introduction: A pier or column footing carries a greater concentrated load than a foundation footing. The column supports half way from column to foundation wall or to another column. Refer to Transparency 14 and Tables 1, 2, and 3 in Assignment Sheet #1 for this example.

Example: 1. Calculate total area supported by column (Figure 1) - - 140 square feet

FIGURE 1

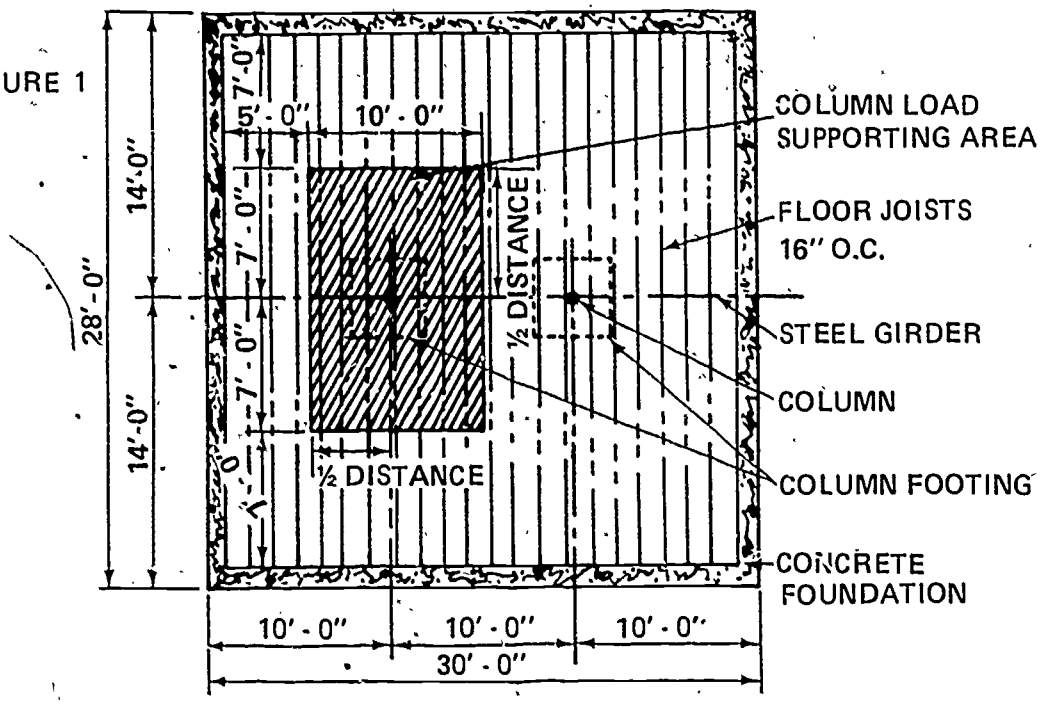

2. Make load calculations

Attic floor --	140 sq. ft. X 30 PSF =	4,200 lbs.
First floor --	140 sq. ft. X 50 PSF =	7,000 lbs.
Partition land--	140 sq. ft. X 20 PSF =	2,800 lbs.
Total load on column		14,000 lbs.

3. Calculate footing area by dividing 14,000 pounds by 3,000 pounds per square foot hard clay; bearing value equals 4.7 square feet

4. Determine length of sides of footing by taking the square root of 4.7 square feet; this equals 2.17'

5. Calculations produce a safe condition using a 2'-0" X 2'-0" X 1'-0" thick footing

ASSIGNMENT SHEET #2

Directions: Using data given and standards, calculate the column or pier footing requirements for a one-story house.

Problems:

A. 1. 30'-0" wide house

2. Column to column distance is 8'-0"

3. Hard clay soil

B. Calculate the column footing requirements for a one-story house as assigned by instructor.

(NOTE: This may be for your design project.)

FOUNDATIONS
UNIT VIII

ASSIGNMENT SHEET #3--DRAW A FOUNDATION PLAN

Introduction: The foundation plan is a dimensional drawing that shows the shape of the floor plan, location and size of concrete footings, concrete piers, concrete floors, wood girders, floor joist sizes, and other related information on the foundation. The procedure given below is for constructing a slab floor or crawl space foundation plan. The scale used is the same as the floor plan.

Example:

1. Place a new sheet of vellum over the floor plan and fasten to drawing surface
2. Using building outlines shown on the first floor plan, draw lines for all exterior walls and garage wall between main part of house
3. Calculate all foundation footings and pier footings and draw them to proper size as hidden lines
4. Draw in wall thickness
5. Draw construction lines across walls to locate all door openings, vent openings, or basement windows
6. Draw in fireplace outlines and footing, if needed
7. Using proper symbol, draw all beams or girders and indicate with notes (Figure 1)

FIGURE 1

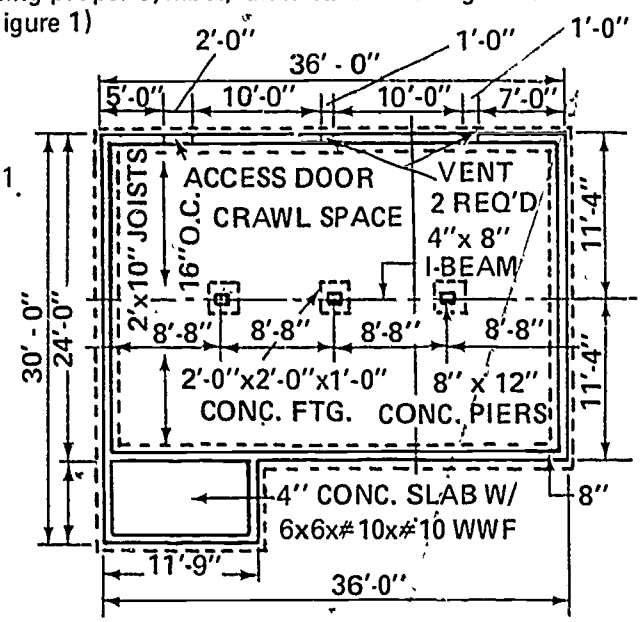

8. Draw each post or pier as required
9. Allow for plumbing chases

ASSIGNMENT SHEET #3

10. Dimension the entire drawing using same rules as on floor plan

11. Indicate floor reinforcement, thickness, waterproofing, and fill note (Figure 2)

FIGURE 2

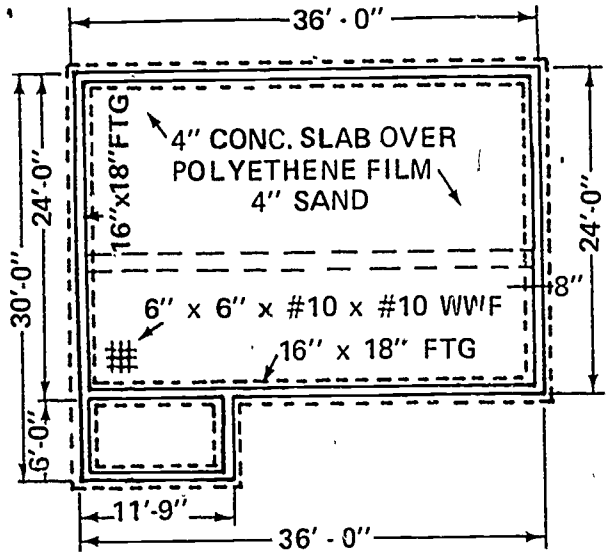

12. Draw joist direction and add notes for crawl space plan

13. Add cutting plane lines for reference to section drawings, if needed

14. Darken in lines and dimensional values

15. Check plan carefully for errors in spelling, total dimensions, and notes

16. Complete lettering in title block

Problem: Draw a foundation plan on vellum as assigned by instructor.

(NOTE: This may be for your design project.)

FOUNDATIONS
UNIT VIII

ASSIGNMENT SHEET #4--DETAIL A FOUNDATION SECTION

Introduction: The purpose of a detail is to illustrate, on a larger scale, the method of assembly. A detail gives the drafter the opportunity to give critical dimensions, describe materials, and indicate maximum and minimum dimensions that cannot be shown in other drawings. Shown below are some basic procedures that guarantee good details. The scale used for most foundation details is 3/4" = 1'-0" or 1" = 1'-0".

Example:

1. Using scale of 3/4" = 1'-0", construct light lines of basic forms like it is built (Figure 1)

   (NOTE: Footing size requirements must be calculated before detailing a foundation section.)

   FIGURE 1

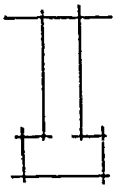

2. Add construction lines for related materials (Figure 2)

   (NOTE: Draw wood products their actual size, not nominal size.)

   FIGURE 2

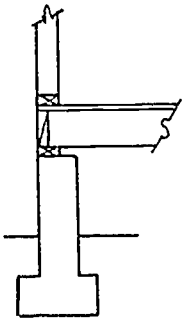

3. Construct dimension lines and diagonal lines (Figure 3)

   FIGURE 3

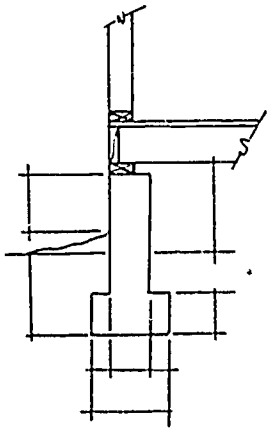

ASSIGNMENT SHEET #4

4. Add all necessary notes with size of object first, then name of object, spacing third, and finally any other information (Figure 4)

(NOTE: Use straight lines or an irregular curve for leaders.)

FIGURE 4

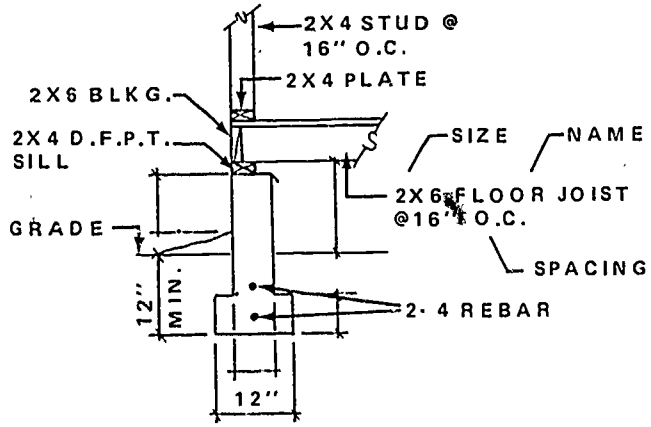

5. Add materials in section, darken in the outline of the foundation, and poche the detail on reverse side of vellum (Figure 5)

FIGURE 5

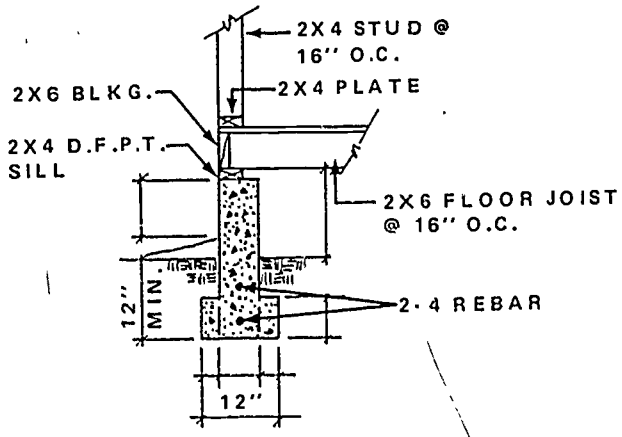

6. Letter in detail title, scale, and reference bubble (Figure 6)

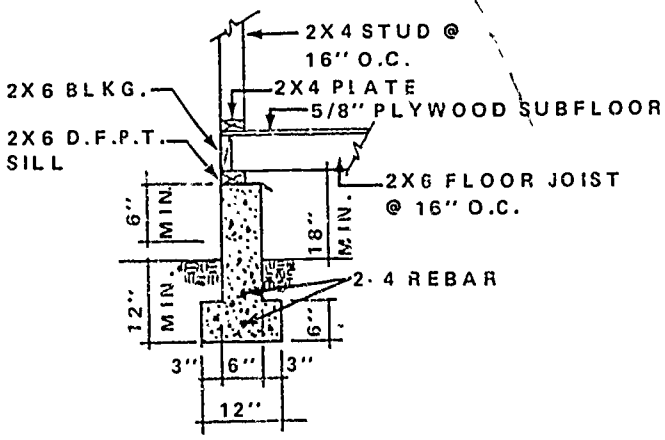

TYPICAL FOOTING DET. A
SCALE: ¾" = 1'0" 3

ASSIGNMENT SHEET #4

Problem: On B size media construct a footing @ veneer and exterior bearing ftg. detail. Use scale of 3/4" = 1'-0". Veneer detail reference is Sheet No. 6, Detail C. Exterior bearing ftg. detail reference is Sheet No. 5, Detail B. Refer to Transparencies 3 and 6 for examples.

FOUNDATIONS
UNIT VIII

NAME _____

TEST

1. Match the terms on the right with the correct definitions.

(NOTE: The terms on this page match the definitions on this page.)

_____a. Drawing which shows the details and location of all concrete footings, piers, columns, foundation walls, and supporting beams of a building

_____b. The supporting portion of a building including the footings

_____c. That part of the house which extends from the first floor to the footing

_____d. The depth to which the soil freezes

_____e. The amount of weight soils can resist calculated in pounds per square foot

_____f. The level of the soil around the structure

_____g. Soil brought to the building site which is mechanically compacted to insure proper weight-bearing capacity

_____h. Soil brought to the building site used to raise the level of the grade

_____i. The removal of soil from a known level

_____j. A masonry section designed to distribute the weight of the structure to the ground or soil

_____k. A groove in a footing of a two-pour concrete system to eliminate possible movement of foundation wall after pour

_____l. The base of the footing rises or lowers as the grade requires while maintaining a constant depth below grade

_____m. A masonry or poured concrete pillar usually below a building to support the floor framing

_____n. A wood or metal post with a footing used to support a beam

1. Key
2. Cut
3. Column
4. Foundation plan
5. Compacted fill
6. Stem wall
7. Frost line
8. Grade
9. Foundation
10. Uncompacted fill
11. Bearing capacity
12. Stepped footing
13. Footing
14. Pier

_____o. A structural member transversely supporting a load

_____p. A poured concrete foundation wall beam that spans piling or piers

_____q. A large or principal horizontal structural member used to support the ends of floor joists and beams

_____r. A masonry unit used to support the ends of beams or stiffen a foundation wall

_____s. A foundation system consisting of steel, timber, or concrete driven vertically into the ground to stable soil or rock

_____t. A concrete floor on grade that can be non-reinforced or reinforced supported by a foundation or independent from a foundation

_____u. Where the slab and foundation are poured at the same time

_____v. The process of including additional materials to strengthen the concrete

_____w. A reinforcing bar placed in concrete to provide resistance to tensile stresses or breakage

_____x. Reinforcing bars used to hold together two different pours of concrete

_____y. A threaded rod inserted in masonry construction to attach sill plate to foundation wall

_____z. The process of applying materials to basement walls, foundation walls, or underside of concrete slab to repel moisture

____aa. The space below the floor of a building built above the ground

____bb. Method where exterior masonry veneer walls may extend 1" past or outside a foundation

____cc. Process of shading in the area to be emphasized

15. Pilaster
16. Rebar
17. Crawl space
18. Piling
19. Grade beam
20. Dowels
21. Monolithic slab
22. Reinforcing
23. Beam
24. Concrete slab
25. Anchor bolt
26. Poche
27. Girder
28. Waterproofing
29. Corbelled brick

____dd. A slot or groove built in a masonry wall to provide space for ducts, pipes, or conduits

____ee. A separation in a masonry or concrete wall or concrete floor to provide room for expansion due to temperature and moisure changes

____ff. Wood impregnated with toxic chemicals at elevated pressures and temperatures to eliminate decay

30. Pressure treated wood

31. Chase

32. Expansion joint

2. Complete the following chart of abbreviations used on foundation plans and details.

_____	AB
Building	_____
Finish	_____
Floor	_____
_____	FTG
Foundation	_____
_____	GA
_____	HDR
_____	PSF
_____	REBAR

3. Name the two types of floor systems.

a. _____

b. _____

4. List two advantages and one disadvantage of wood foundations.

a. Advantages

1) _____

2) _____

b. Disadvantage-- _____

_____

5. Identify types of footing systems.

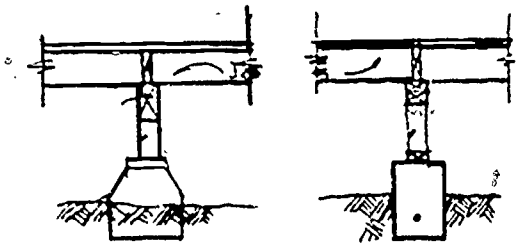

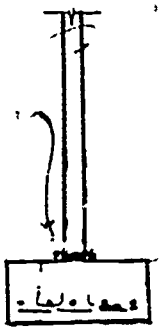

a. _____ b. _____

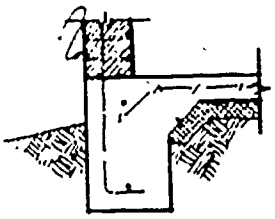

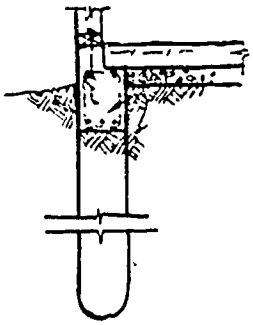

c. _____ d. _____

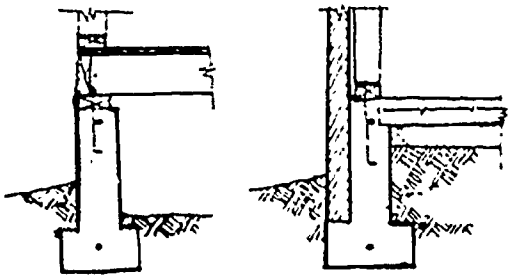

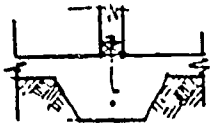

e. _____ f. _____

6. Identify typical crawl space footing detail drawings.

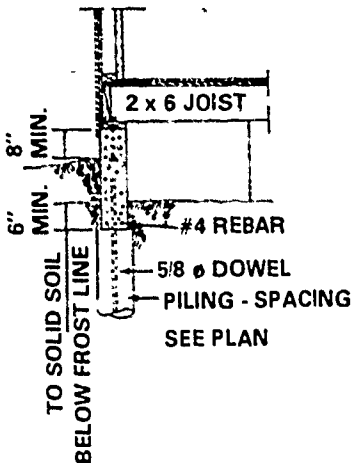

a. _____

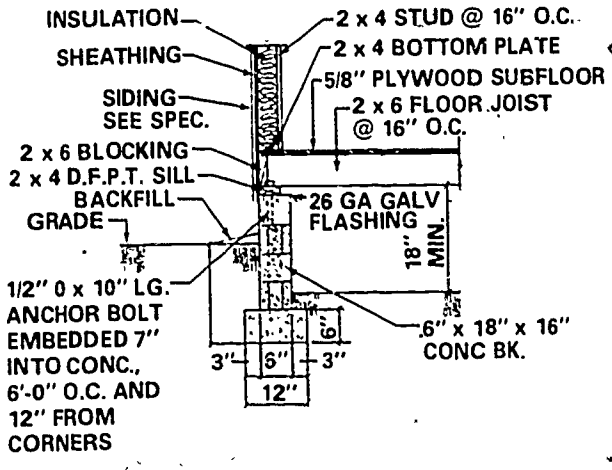

b. _____

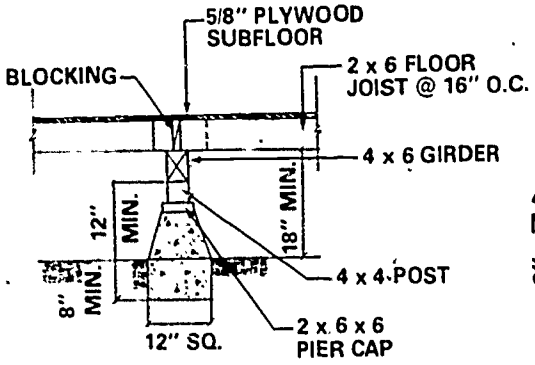

c. _____

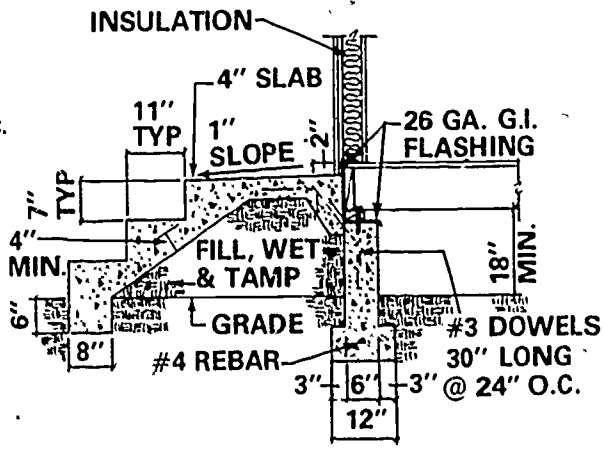

d. _____

7. Identify typical slab floor footing detail drawings.

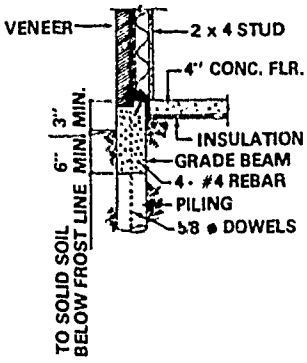

a. _____

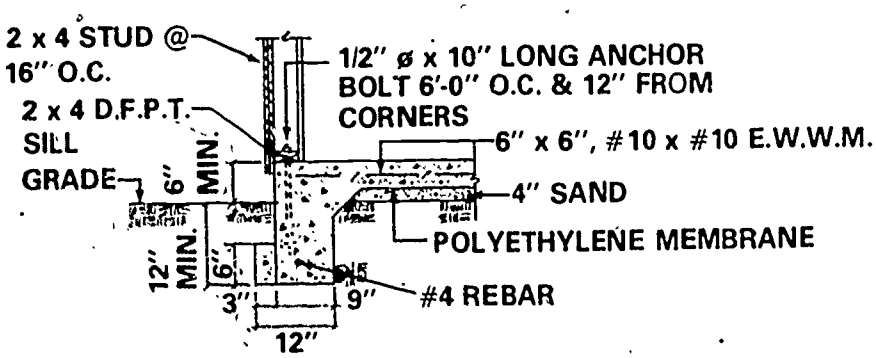

b. _____

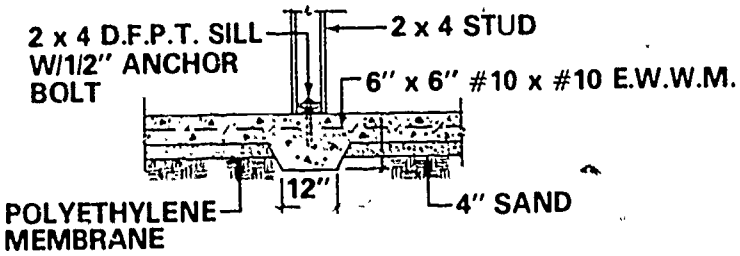

c. _____

8. List two methods of waterproofing the foundation wall and concrete slab.

   a. _____

   b. _____

9. List three methods of protecting a structure from termites.

   a. _____

   b. _____

   c. _____

10. Select methods of preventing breakage of foundations and concrete slabs by placing an "X" in the appropriate blanks.

   _____a. Treated wood

   _____b. Sand bed

   _____c. Soil treatment

   _____d. Reinforcing

   _____e. Fiber inserts

   _____f. Footing placed below first line

11. Select true statements concerning designing and constructing a footing by placing an "X" in the appropriate blanks.

_____a. The concrete should be poured continuously; no load should be placed on a footing until the concrete has thoroughly set up

_____b. If a footing trench is dug too deeply, the excess space should be filled with uncompacted fill dirt

_____c. Footings can be poured in earth trenches without side forms if the soil is firm enough to retain its shape

_____d. Footing width should be designed to support with safety the load to be placed upon it

_____e. Footings do not need to be protected from freezing

_____f. In residential construction, a footing should never be less than 6" (152 mm) thick

_____g. Footing thickness should be at least four and a half times the projection of the footing from the foundation

_____h. The thickness-to-width ratio of a footing should be kept close to 2 to 1 if footing projection exceeds one half the width of the foundation thickness

_____i. The bearing area of flared footing is figured the same way as for spread footings

_____j. The slope of a flared footing should be less than 40° from the normal degree of slope grade

_____k. A stepped footing horizontal and vertical steps should be poured at the same time

12. Select true statements concerning designing piling and grade beams by placing an "X" in the appropriate blanks.

_____a. Each pier and column footing loading should be figured separately

_____b. Pier or column footing thickness is 4-6"

_____c. Piling should be spaced 8'-0" on center maximum, at least 10" in diameter, and have a bearing area of 2 square feet for average soil

_____d. Piling should have one No. 5 bar running full length into grade beam

_____e. Grade beam for frame construction should be at least 6" wide by 14" high

_____f. Grade beam for masonry and masonry veneer construction should be 15" wide by 14" high

_____g. Grade beam should have seven No. 8 steel bars for masonry and masonry veneer construction or four No. 6 steel bars for frame construction

13. Select true statements concerning designing a slab foundation system by placing an "X" in the appropriate blanks.

_____a. Slab on ground construction should not be attempted in areas having ground water or a hydrostatic pressure condition near the ground surface

_____b. The site does not need to be graded

_____c. Perimeter insulation never should be used

_____d. The slab may be poured a little at a time

_____e. Concrete should be allowed to develop top strength before being subjected to a load

_____f. The maximum floor slab should be 2" thick

_____g. Metal heating coils and reinforcement should be covered with at least 1" of concrete

_____h. Hot air ducts in a slab should be completely encased in at least 2" (51 mm) of concrete, unless they are crush-resistant

_____i. The top of the floor slab should be at least 2" below the finished grade

_____j. Porch floor slabs need not be reinforced regardless of size

14. Match symbols used in foundation plans and details on the right with the correct names.

_____a. Brick, common

_____b. Concrete

_____c. Concrete block

_____d. Earth

_____e. Insulation (batt, loose, fill-blanket)

_____f. Rigid insulation

_____g. Metal, flashing or waterproofing

_____h. Gypsum wallboard

_____i. Stone, gravel, porous fill

_____j. Reinforcing bar

_____k. Wood, finish

_____l. Wood, rough

_____m. Wood finish on stud

_____n. Wire mesh

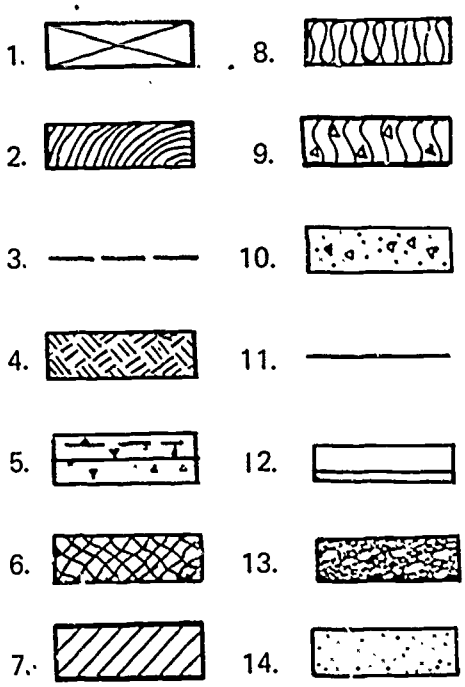

15. Distinguish between live and dead loads by placing an "X" next to the description of a live load.

    _____a. Those static or fixed weights of the structure itself

    _____b. Those fixed or moving weights which are not a structural part of the house

16. List three preliminary steps to drawing a foundation plan

    a. _____

    _____

    b. _____

    _____

    c. _____

    _____

17. Demonstrate the ability to:

    a. Calculate the footing requirements for a typical one-story frame house.

    b. Calculate pier or column footing requirements.

    c. Draw a foundation plan.

    d. Detail a foundation section.

    (NOTE: If these activities have not been accomplished prior to the test, ask your instructor when they should be completed.)

FOUNDATIONS
UNIT VIII

ANSWERS TO TEST

1.

a.	4	l.	12	w.	16
b.	9	m.	14	x.	20
c.	6	n.	3	y.	25
d.	7	o.	23	z.	28
e.	11	p.	19	aa.	17
f.	8	q.	27	bb.	29
g.	5	r.	15	cc.	26
h.	10	s.	18	dd.	31
i.	2	t.	24	ee.	32
j.	13	u.	21	ff.	30
k.	1	v.	22		

2.

Anchor bolt	AB
Building	BLDG
Finish	FIN
Floor	FL
Footing	FTG
Foundation	FDN
Gauge	GA
Header	HDR
Pounds per sq. ft.	PSF
Reinforcing bar	REBAR

3. a. Concrete slab
   b. Supported (wood) floor

4. Any two of the following:

   a. Advantages
      1) Costs less to build
      2) Requires less excavation
      3) Saves time in construction

   Either of the following:

   b. Disadvantages
      1) Should not be used in wet climates
      2) Requires special treated wood

5. a. Pier with post
   b. Pier with column
   c. Grade beam - one pour
   d. Grade beam with pile
   e. Spread
   f. Interior - one pour

6. a. Grade beam
   b. Exterior bearing footing
   c. Typical pier detail
   d. Porch connection

7. a. Grade beam @ veneer
   b. Exterior bearing footing
   c. Interior bearing footing

8. Any two of the following:

   a. Waterproof materials
   b. Drain tile
   c. Chemicals in concrete
   d. Pipe mastic

9. Any three of the following:

   a. Treated wood
   b. Soil treatment
   c. Crawl space ventilation
   d. Termite shield

10. b, d, e, f

11. a, c, d, f, h, i, k

12. a, c, d, e

13. a, e, g, h

14.

a.	7	h.	14
b.	10	i.	13
c.	9	j.	5
d.	4	k.	2
e.	8	l.	1
f.	6	m.	12
g.	11	n.	3

15. b

16. Any three of the following:

   a. Examine the floor plan to determine the type of exterior walls specified
   b. Examine the plot plan and elevation to determine the need for stepped footings, retaining walls, and problems related to grade
   c. Determine the size of footings and foundation walls required from information available
   d. Check the frost penetration depth for the area where the house is to be built
   e. Refer to building codes to be sure that all requirements are met
   f. Have a soil bearing test made if soil bearing capacity is questionable

17. Evaluated to the satisfaction of the instructor

DETAILS
UNIT IX

UNIT OBJECTIVE

After completion of this unit, the student should be able to identify types of stairways, types of fireplaces, and parts of a wood window. The student should also be able to construct a stairway layout and draw fireplace details, cabinet details, door and window details, and a wall section detail. This knowledge will be evidenced by correctly performing the procedures outlined in the assignment sheets and by scoring 85 percent on the unit test.

SPECIFIC OBJECTIVES

After completion of this unit, the student should be able to:

1. Match terms related to details with the correct definitions.
2. Identify features of a stairway.
3. Identify types of stairways.
4. Complete stairway formulas.
5. Distinguish between stair slopes.
6. Label components of a fireplace.
7. Identify types of fireplaces.
8. Distinguish between characteristics of masonry fireplaces and metal prefabricated fireplaces.
9. Select true statements concerning requirements for fireplace sizing and detailing.
10. Match types of fireplace detail drawings with the correct uses.
11. Label parts of a wood window.
12. List the four major parts of a window section drawing.
13. List the three major parts of a door section drawing.
14. Arrange in order the steps for drawing a wall section detail.
15. Demonstrate the ability to:
    a. Construct a stairway layout.
    b. Draw fireplace construction details.

c. Draw typical cabinet details.

d. Draw door and window section details.

e. Draw a wall section detail.

DETAILS
UNIT IX

SUGGESTED ACTIVITIES

I. Provide student with objective sheet.

II. Provide student with information and assignment sheets.

III. Make transparencies.

IV. Discuss unit and specific objectives.

V. Discuss information and assignment sheets.

VI. Provide examples of section detail drawings of residential and commercial buildings.

VII. Take a field trip to a cabinet or mill shop.

VIII. Provide manufacturers' catalogs of appliances, cabinets, prefabricated fireplaces, doors, and windows for use with the assignment sheets.

IX. Give test.

INSTRUCTIONAL MATERIALS

I. Included in this sheet:

A. Objective sheet

B. Information sheet

C. Transparency masters

1. TM 1--Features of a Stairway
2. TM 2--Types of Stairways
3. TM 3--Components of a Fireplace
4. TM 4--Types of Fireplaces
5. TM 5--Prefabricated Fireplace
6. TM 6--Prefabricated Fireplace (Continued)
7. TM 7--Fireplace Details
8. TM 8--Cabinet Details

9. TM 9--Cabinet Details (Continued)

10. TM 10--Cabinet Dimensions

11. TM 11--Parts of a Cabinet

12. TM 12--Parts of a Window

13. TM 13--Wood Door and Window Sections

14. TM 14--Aluminum Window Section

15. TM 15--Drawing a Wall Section Detail

16. TM 16--Drawing a Wall Section Detail (Continued)

D. Assignment sheets

1. Assignment Sheet #1--Construct a Stairway Layout

2. Assignment Sheet #2--Draw Fireplace Construction Details

3. Assignment Sheet #3--Draw Typical Cabinet Details

4. Assignment Sheet #4--Draw Door and Window Section Details

5. Assignment Sheet #5--Draw a Wall Section Detail

E. Test

F. Answers to test

II. References:

A. Badzinski, Stanley Jr. *Stair Layout.* Chicago 60637: American Technical Society, 1974.

B. Brown, Walter C. *Blueprint Reading for Construction Residential and Commercial.* South Holland, IL 60473: Goodheart-Willcox Co., Inc., 1980.

C. Goodban, William T. and Jack J. Hayslett. *Architectural Drawing and Planning.* St. Louis: Gregg Division/McGraw-Hill Book Co., 1979.

D. Obermeyer, Thomas. *Architectural Technology.* St. Louis: Gregg Division/McGraw-Hill Book Co., 1976.

E. Ramsey, Charles G. and Harold R. Sleeper. *Architectural Graphic Standards.* New York: John Wiley & Sons, Inc., 1970.

F. Wakita, Osamu A. and Richard M. Linde. *The Professional Practice of Architectural Detailing.* New York: John Wiley & Sons, Inc., 1970.

G. *Manual of Acceptable Practices to the HUD Minimum Property Standards.* Washington, D. C.: U.S. Department of Housing and Urban Development, 1973.

H. Weidhaas, Ernest R. *Architectural Drafting and Construction.* Boston: Allyn and Bacon, Inc., 1974.

I. Willis, Charles D. *Blueprint Reading for Commercial Construction.* Albany, NY 12205: Delmar Publishers/Litton Educational Publishing, Inc., 1979.

J. *Residential Fireplace and Chimney Details.* McLean, VA· Brick Institute of America.

DETAILS
UNIT IX

INFORMATION SHEET

I. Terms and definitions

A. Riser--Vertical member from bottom of one tread to the tread above

B. Tread--Horizontal member extending from face of one riser to the face of an adjoining one, plus nosing

C. Nosing--Portion of the tread which projects beyond the riser surface

D. Unit rise--Vertical distance from the top of one tread to the next tread

E. Unit run--Horizontal distance from the face of one riser to the face of the next riser

F. Closed stairs--Stairs which have a wall on both sides

G. Open stairs--Stairs which have no wall on one or both sides

H. Mantel--Decorative ledge above the fireplace

I. Saddle--Two sloping surfaces meeting in a ridge and used between the back side of chimney and a sloping surface

J. Firebrick--Type of hard, heat-resistant masonry which has been fired and kiln dried

K. Chimney chase--The assembly of materials that encloses the metal flue

L. Cement wash--Cement and sand mix placed on top of chimney for weather-proofing

(NOTE: This is sometimes called the concrete cap.)

M. Throat--Opening in a fireplace that is controlled by a damper to provide passage of smoke and hot-air gases up the chimney

N. Clean out--Area in the ash pit used for easier removal of ashes

O. Spark arrester--A metal cap with screen placed on chimney flue to retain sparks in flue

P. Stile--A vertical face frame member of cabinet trim

Q. Rail--A horizontal face frame member of cabinet trim

R. Furring--Wood strips fastened to a wall or ceiling for attaching dry wall above wall cabinet

(NOTE: Furr down is normally 1'-0".)

INFORMATION SHEET

S. Cabinet work--All storage spaces that are not part of the structure and may be job-built, shop-built, or manufactured

(NOTE: See manufacturers' catalogs for planning.)

T. Soffit--The underside of a furred down area above wall cabinets

(NOTE: This is called the soffit line.)

U. Transverse wall section--A section that runs through the narrow width of a building

V. Longitudinal wall section--A section that runs through the length of a building

II. Features of a stairway (Transparency 1)

A. Unit rise

B. Unit run

C. Tread

D. Riser

E. Tread nosing

F. Stringer or carriage

G. Hand rail

H. Clearance

I. Balusters

J. Newell post

K. Total rise

L. Total run

M. Landing

III. Types of stairways and uses (Transparency 2)

A. Straight run--Used most in home construction

B. U-type--Used most in public buildings and split foyers

C. L-type with landing--Used where straight run space is not available

D. L-type with winders--Used where space is not available for L-type with landing

E. Spiral--Used where little space is available

INFORMATION SHEET

IV. Stairway formulas

A. Unit rise + Unit run = 17" to 18"

B. 2 x Unit rise + Unit run = 24" to 25"

C. Unit rise x Unit run = 72" to 75"

V. Stair slopes

A. Minimum--5" riser, 9" tread

B. Recommended--7 1/2" riser, 10" tread

C. Maximum--8 1/4" riser, 16" tread

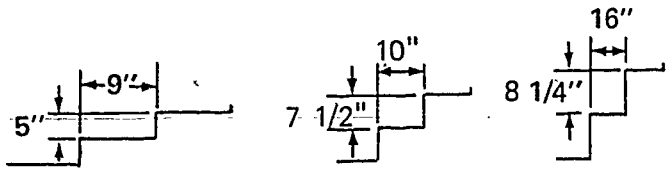

Minimum Recommended Maximum

VI. Components of a fireplace (Transparency 3)

A. Cap

B. Spark arrester

C. Flue lining

(NOTE: This is made of terra cotta or prefabricated metal pipe. Standard sizes are found in manufacturers' catalogs.)

D. Flue

E. Chimney

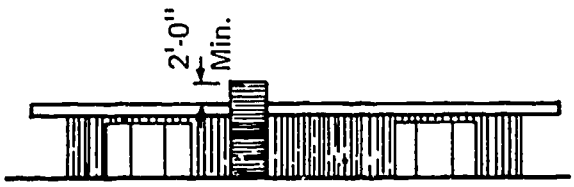

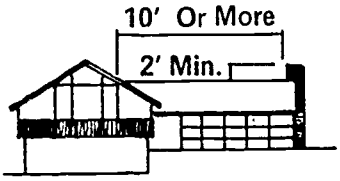

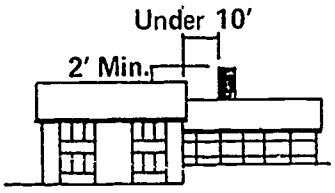

Minimum Chimney Height

INFORMATION SHEET

F. Smoke chamber

G. Throat

H. Damper

I. Ash pit

J. Clean out

K. Footing

L. Hearth

M. Firebox

N. Face

VII. Types of fireplaces (Transparency 4)

A. Single face

B. Double face--opposite sides

C. Double face--adjacent sides

D. Three face

E. Prefabricated

VIII. Characteristics of masonry fireplaces and metal prefabricated fireplaces

A. Masonry fireplaces

1. Are pleasing to the eye
2. Can burn larger sizes of wood
3. Last a lifetime
4. Are expensive to install
5. Some local codes do not permit their installation in existing homes
6. Usually are not as efficient
7. Can be a safety hazard if not constructed correctly

B. Metal prefabricated fireplaces

1. Cost less to install
2. Generally heat up faster and give more heat

INFORMATION SHEET

3. Commonly used as a source of back up heat

4. Will not last a lifetime

5. Sizes of wood used for burning is limited

6. Can be a safety hazard if not constructed correctly

IX. Requirements for fireplace sizing and detailing (Transparencies 5 and 6)

(NOTE: Refer to standards or manufacturers' catalogs for sizes.)

A. Verify that prefabricated fireplace meets building code requirements

B. Framing lumber should not come closer than 2" from chimney

C. Extend chimney 2' higher than any portion of a roof located within 10'

D. Each fireplace must have a separate flue

E. For proper draft, the area of the flue should not be less than one-tenth the area of the fireplace opening

F. Prefabricated fireplace elevation drawings are needed to show clearances and sizes for code or manufacturers' recommendations

G. Design of brick masonry fireplace should be based upon 4" module to reduce the amount of brick cutting

X. Types of fireplace detail drawings and uses (Transparency 7)

(NOTE: Refer to *Residential Fireplace and Chimney Details* by The Brick Institute of America for more information.)

A. Front elevation view--Shows size of fireplace opening, trim, hearth, and mantel dimensions

B. Section view--Shows assembly and details from footing through ceiling to cap height above finished roof level

C. Plan view--Commonly shown on floor plan that shows overall size and location dimensions of fireplace

XI. Parts of a wood window (Transparency 12)

(NOTE: Refer to Unit VI, "Working Drawings" for the use of schedules.)

A. Sash

1. Top rail

2. Meeting rail

INFORMATION SHEET

3. Side rail

4. Bottom rail

B. Frame

1. Top jamb

2. Side jamb

3. Sill

4. Blind stop

C. Trim

1. Apron

2. Stool

3. Casing (exterior)

D. Drip cap

(NOTE: This is used for wood frame exterior walls.)

E. Glass

1. Single

2. Double

3. Triple

4. Insulated

(NOTE: This is sometimes called Thermopane.)

F. Mullions and muntins

XII. Major parts of a window section drawing (Transparencies 13 and 14)

(NOTE: Details are drawn at a scale of 1 1/2" = 1'-0" or 3" = 1'-0".)

A. Head

B. Jamb

C. Rail

D. Sill

INFORMATION SHEET

XIII. Major parts of a door section drawing (Transparency 13)

(NOTE: Refer to Unit VI, "Working Drawings" for schedules.)

A. Head

B. Jamb

C. Sill

(NOTE: This is for exterior doors.)

XIV. Steps for drawing a wall section detail (Transparencies 15 and 16)

A. Draw horizontal projection lines lightly

B. Draw vertical projection lines lightly

C. Add material thickness and primary detail

D. Add other detail sections

Features of a Stairway

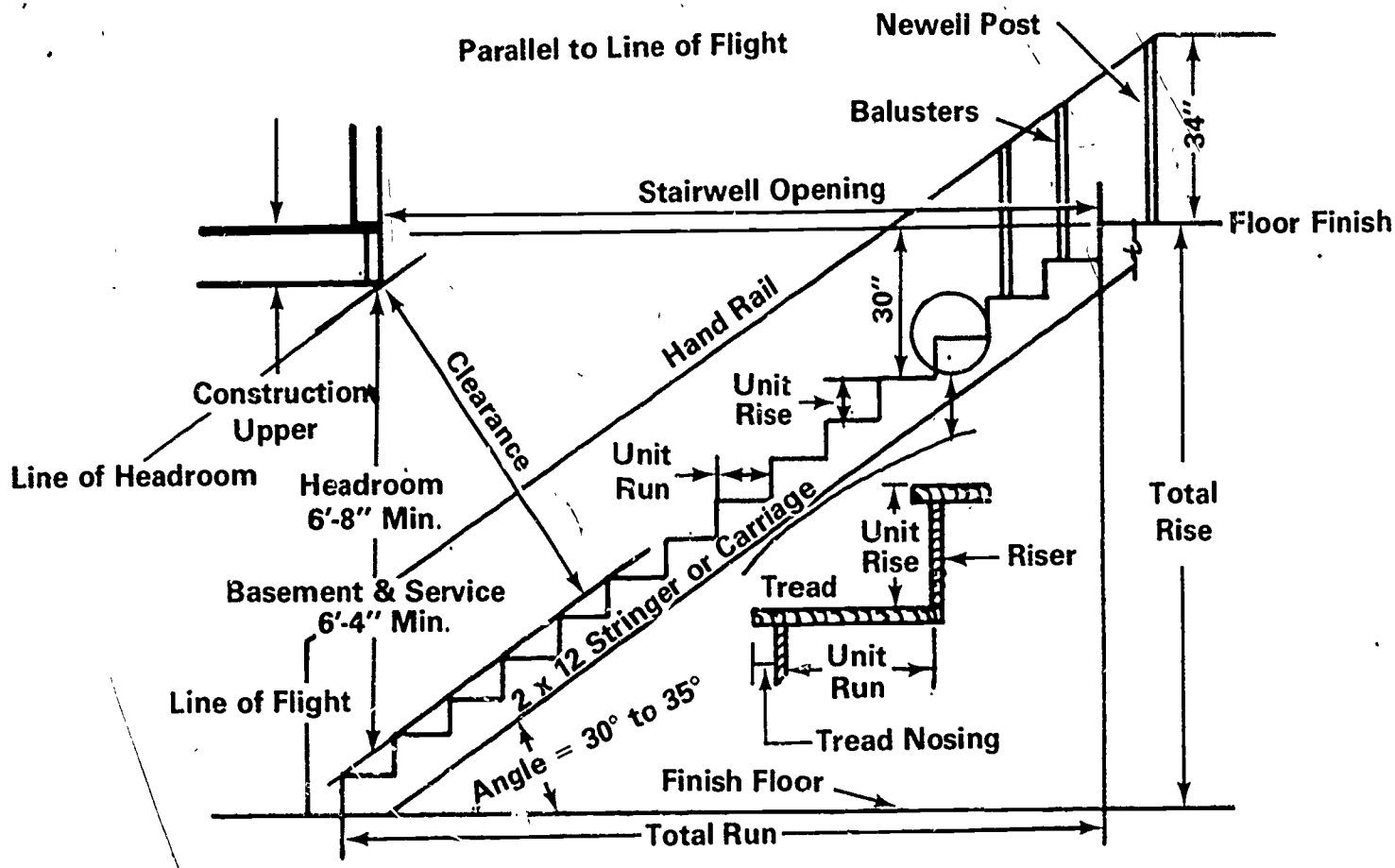

Types of Stairways

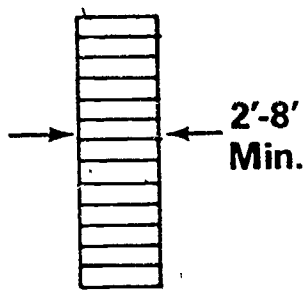

Straight Run
(Open or Closed)

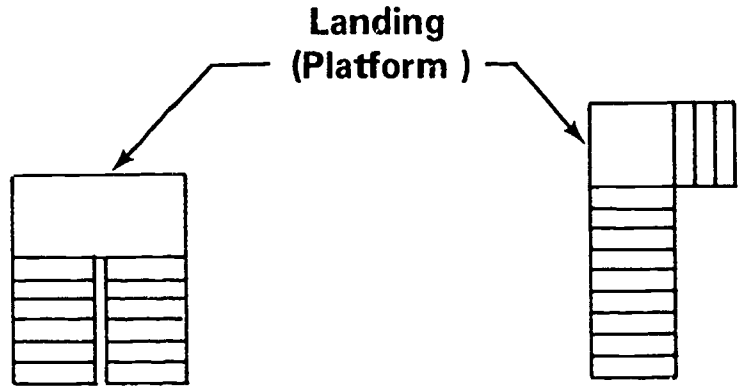

U-Type

L-Type
With Landing

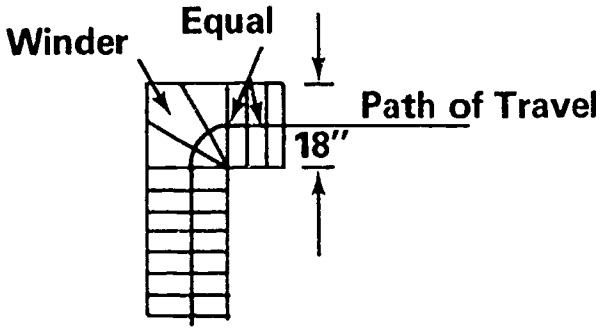

L-Type
With Winders

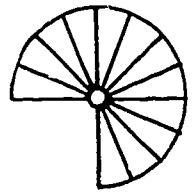

Spiral
Minimum

Components of a Fireplace

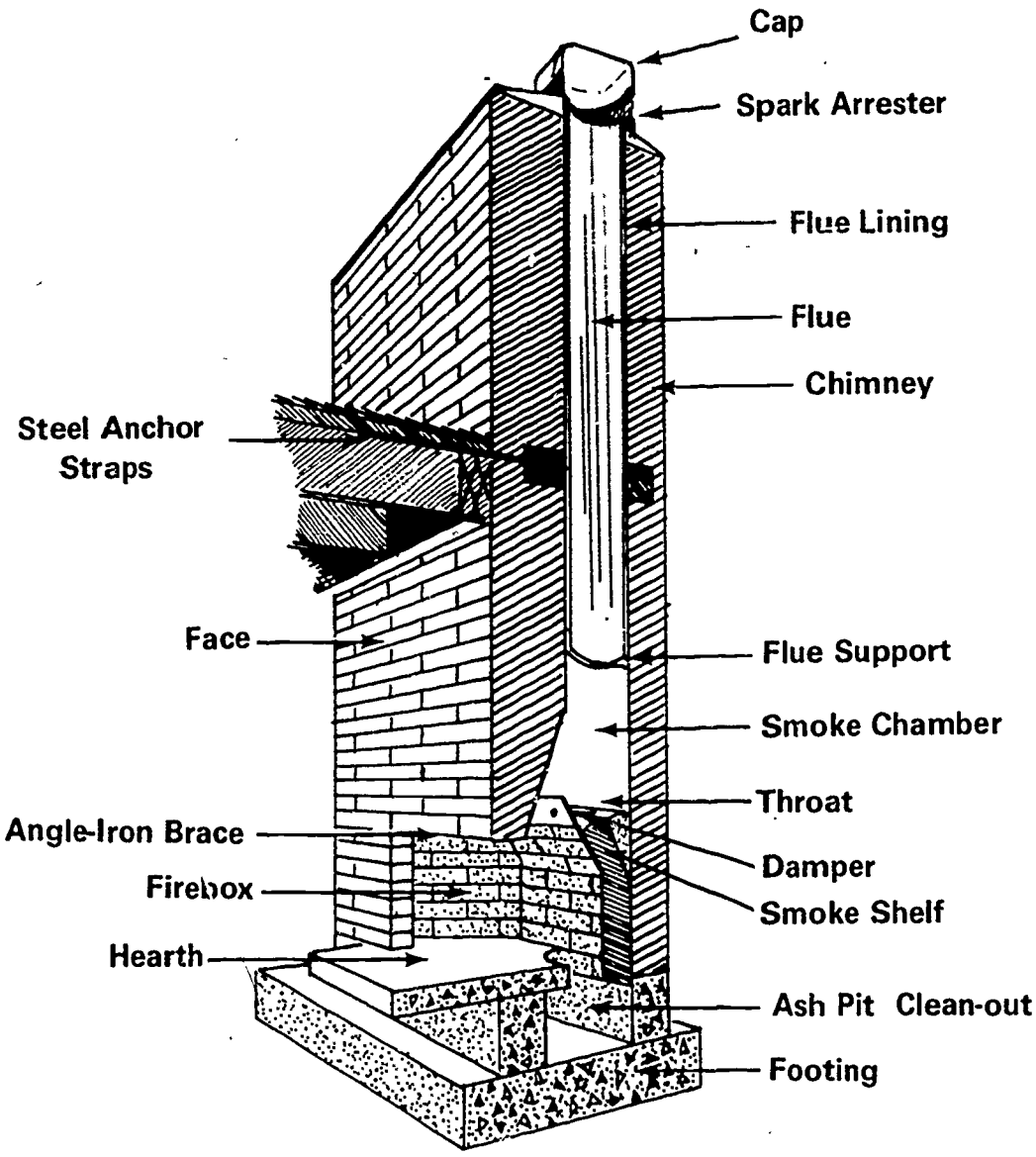

Types of Fireplaces

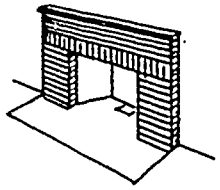

Single Faced

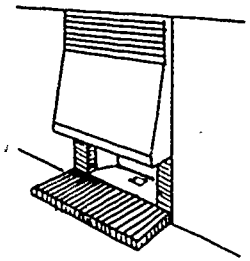

Copper Hood

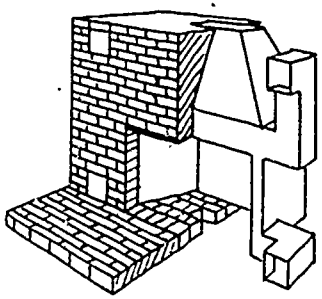

Prefabricated Metal Liner

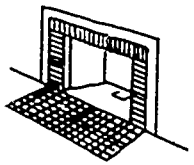

Flush

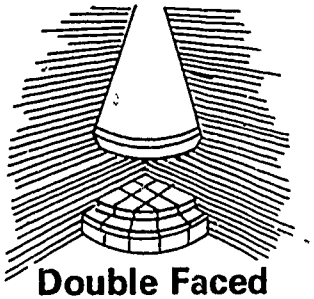

Double Faced (Adjacent Sides)

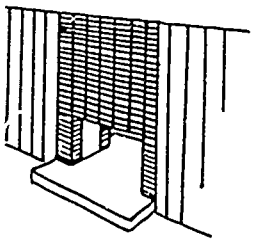

Double Faced (Opposite Sides)

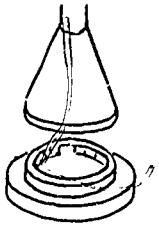

Prefabricated Free-Standing

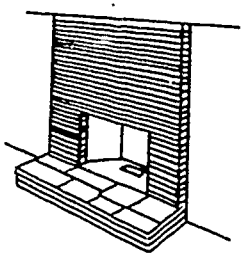

Raised Hearth

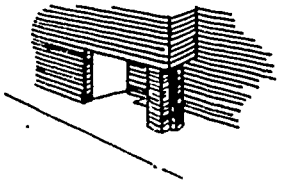

Double Faced (Adjacent Sides)

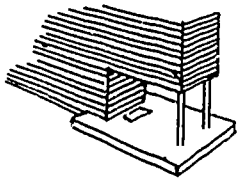

Three-Faced

Prefabricated Fireplace

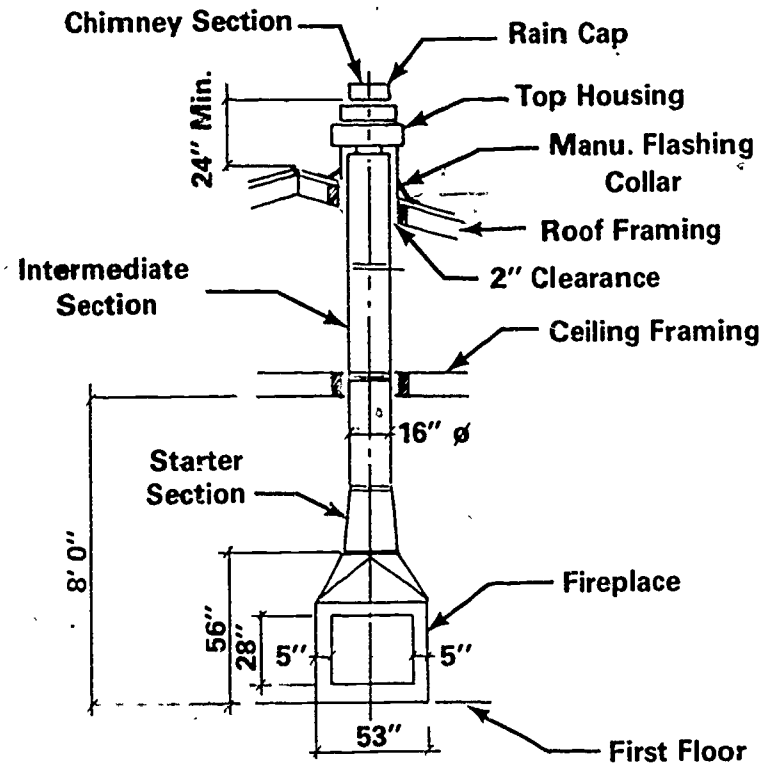

ELEVATION

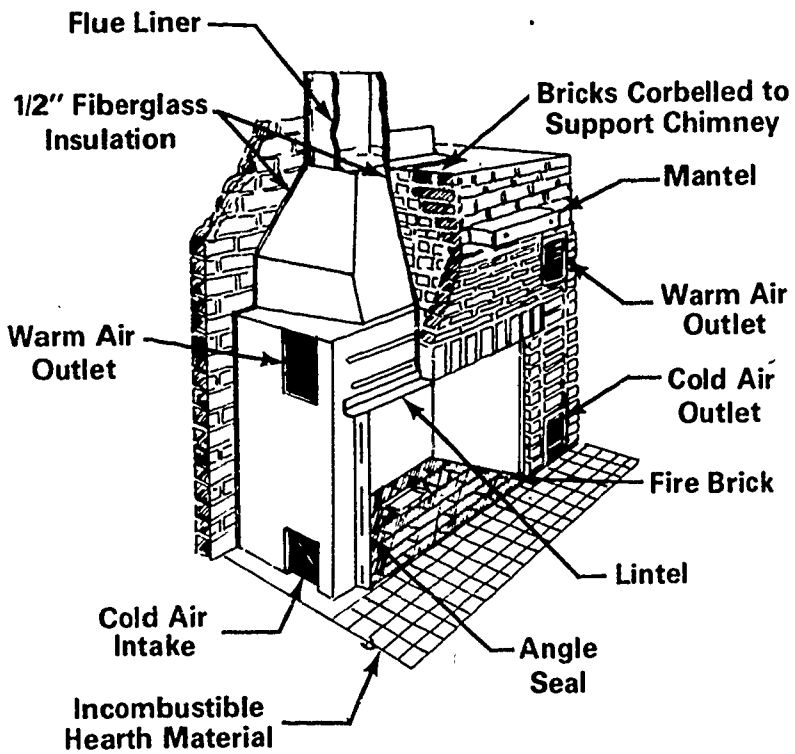

PICTORIAL

Prefabricated Fireplaces

(Continued)

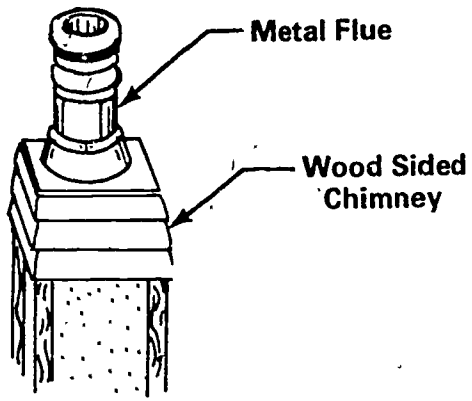

PICTORIAL VIEW OF CHASE

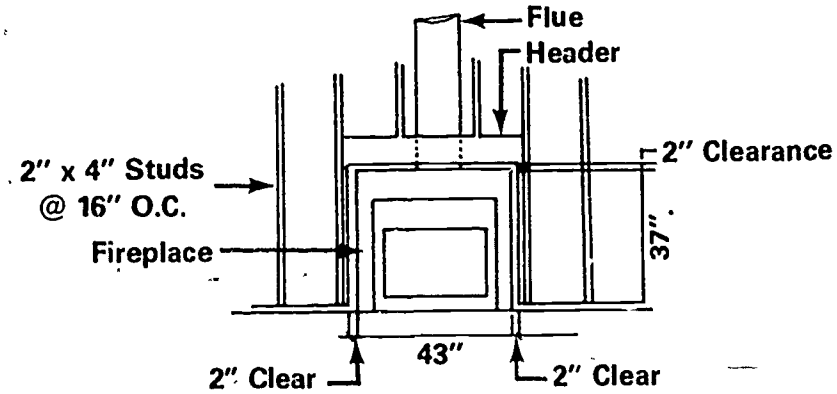

FRAMING ELEVATION

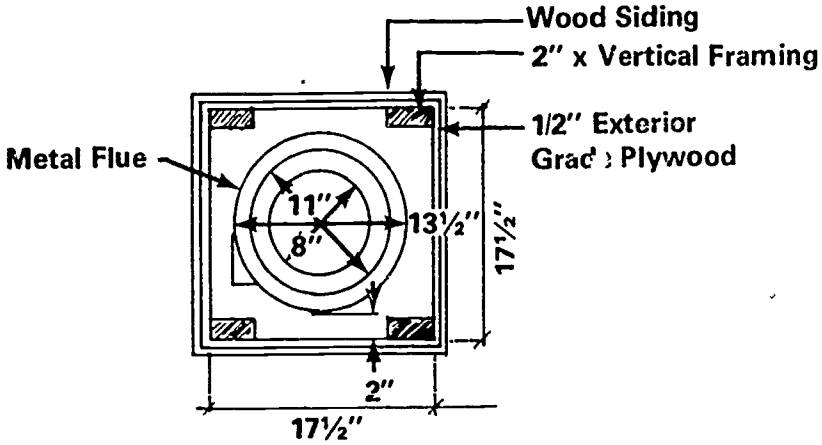

FRAMING PLAN VIEW OF CHASE

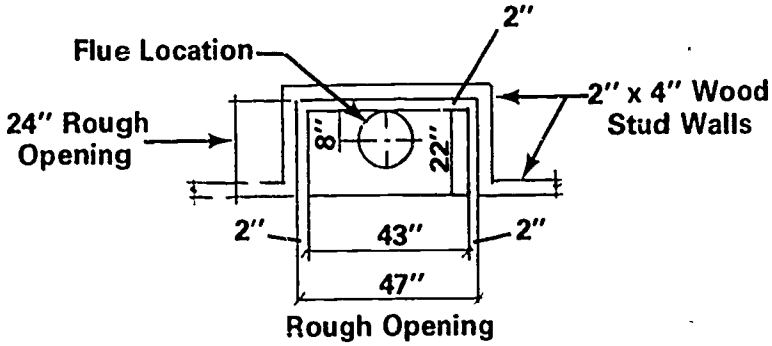

FRAMING PLAN

Fireplace Details

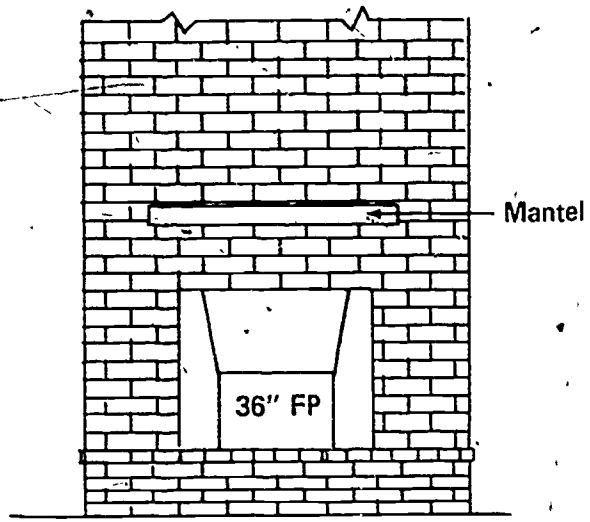

Front Elevation

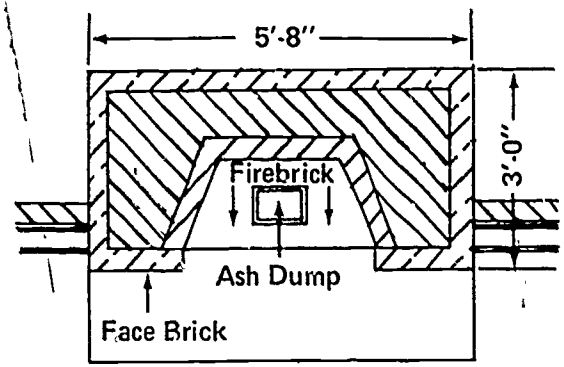

Raised Hearth

Plan

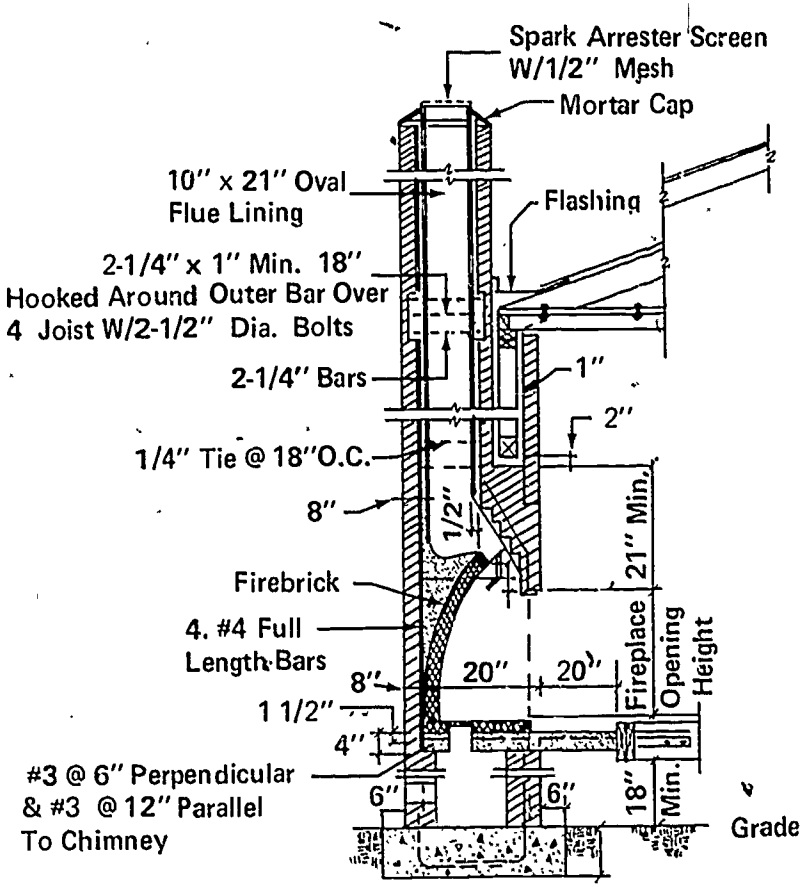

Section

Cabinet Details

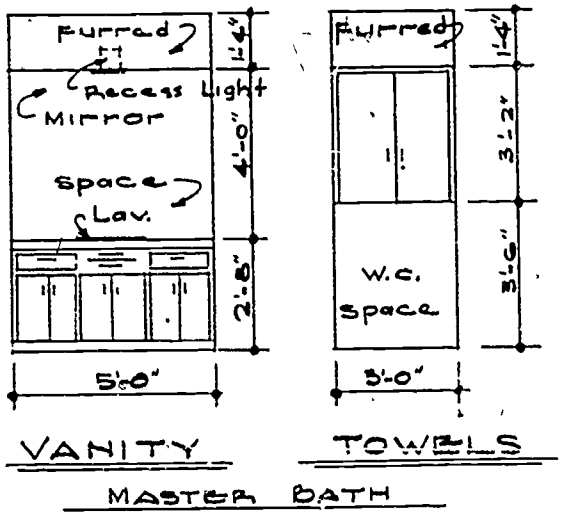

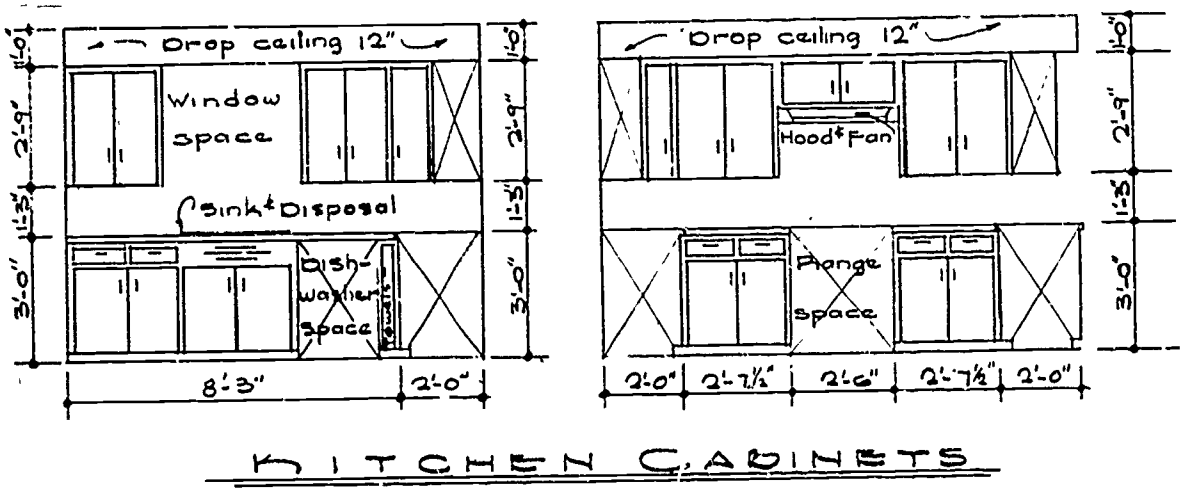

Cabinet Details
(Continued)

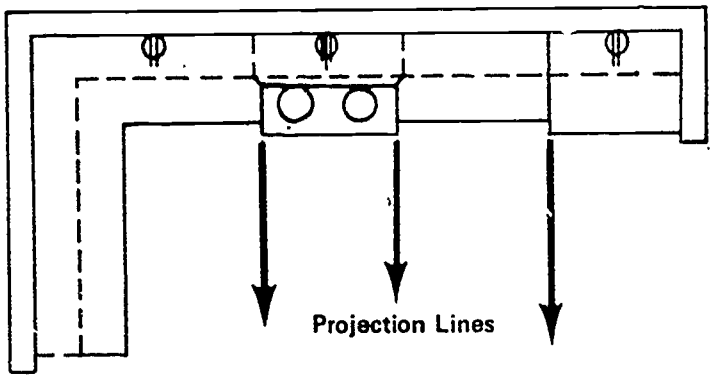

Plan

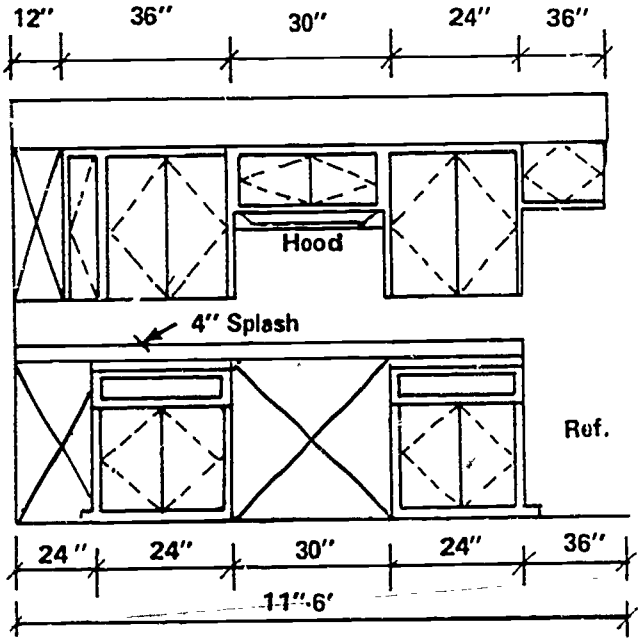

Elevation

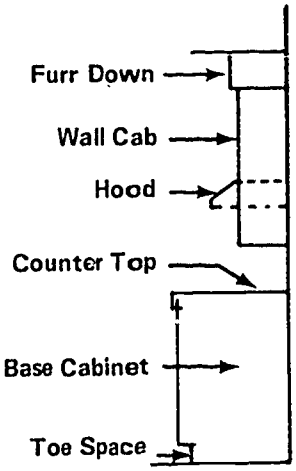

Section

Cabinet Dimensions

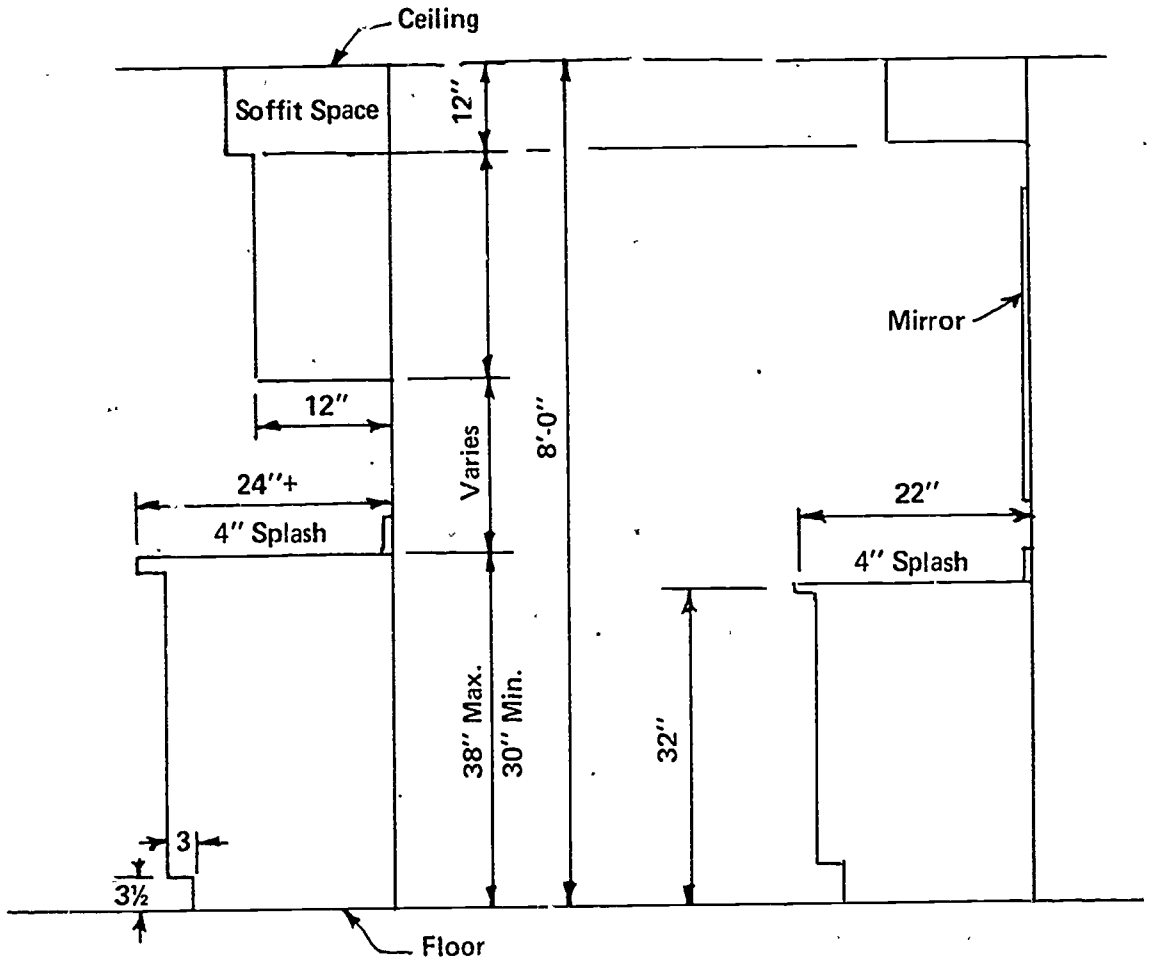

Kitchen

Vanity

Parts of a Cabinet

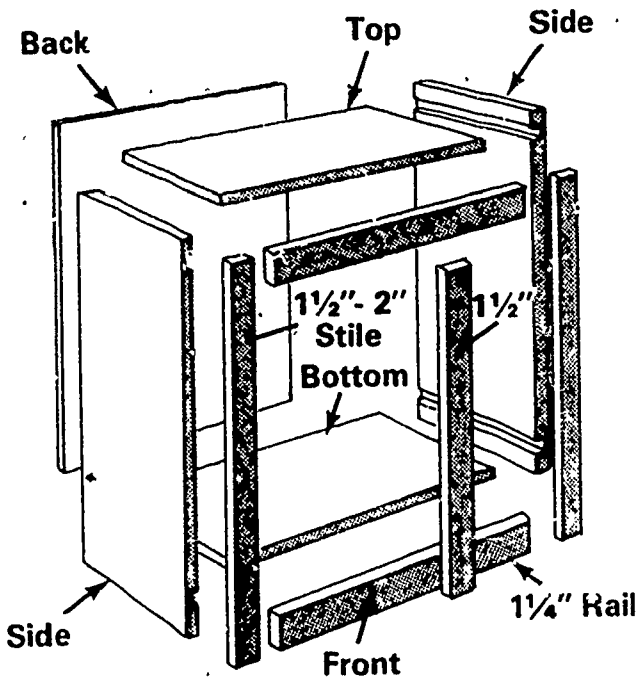

WALL CABINET

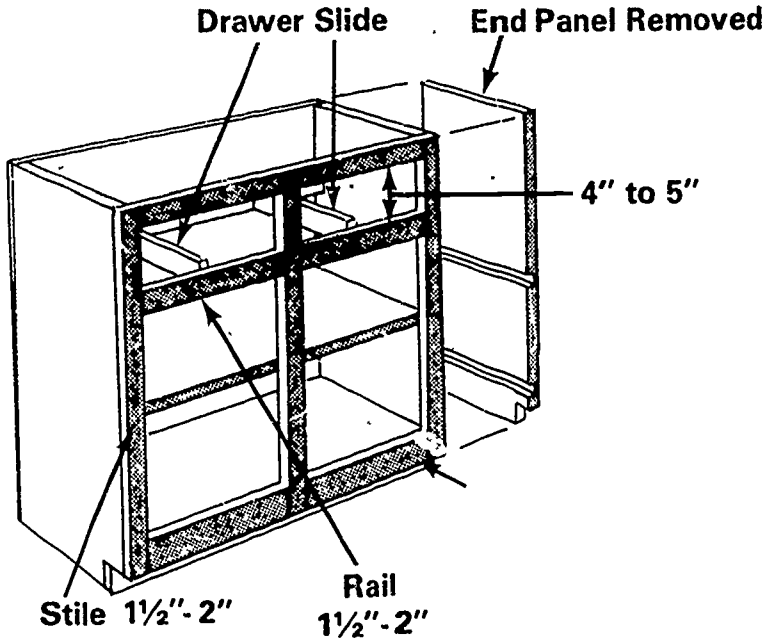

BASE CABINET

Parts of a Window

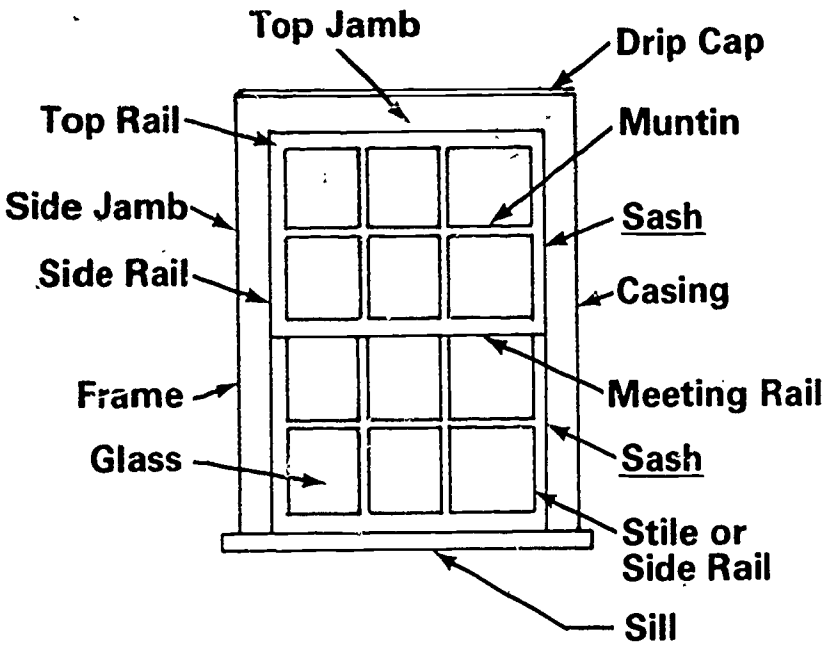

Wood

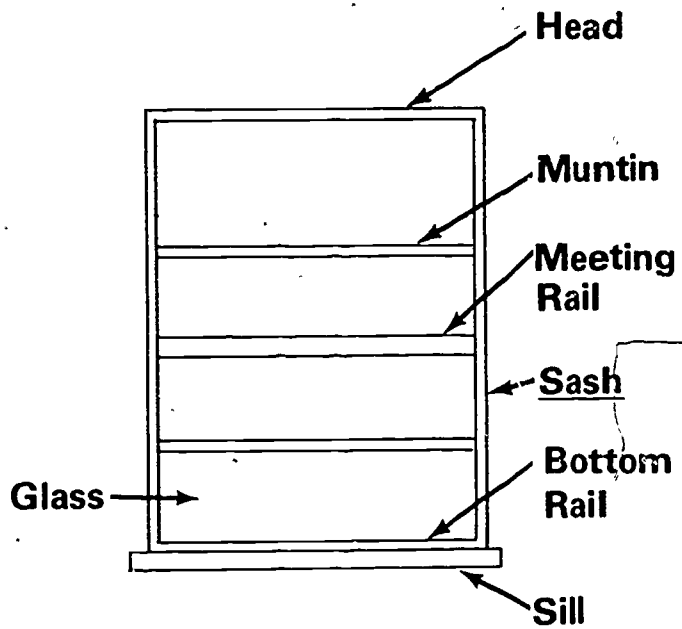

Aluminum

Wood Door and Window Sections

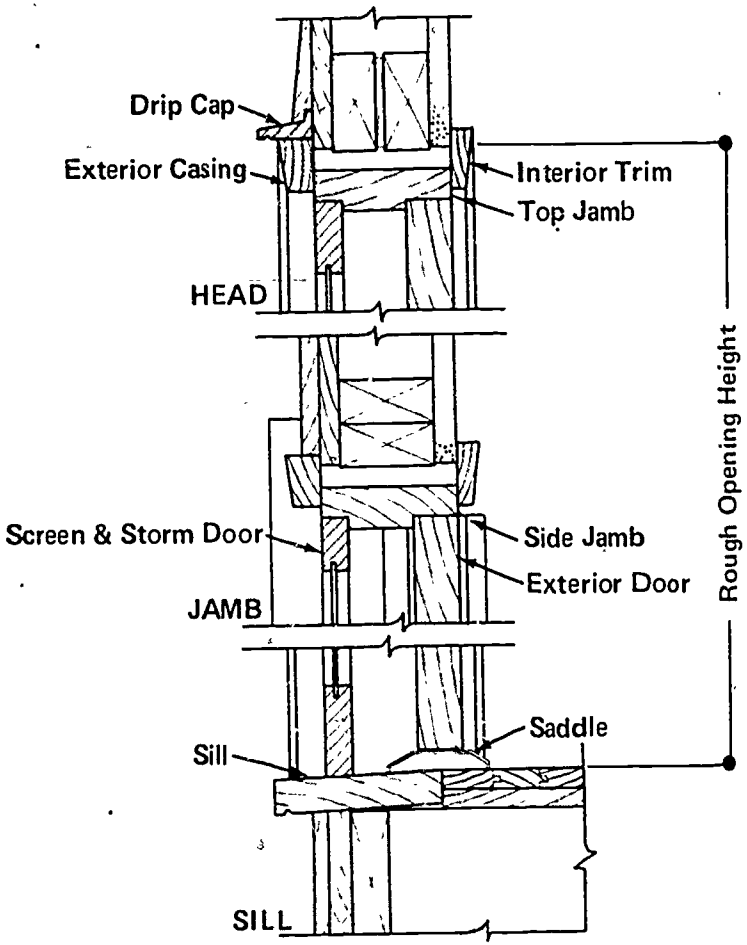

Exterior Wood Door Section
Scale: 3" = 1'-0"

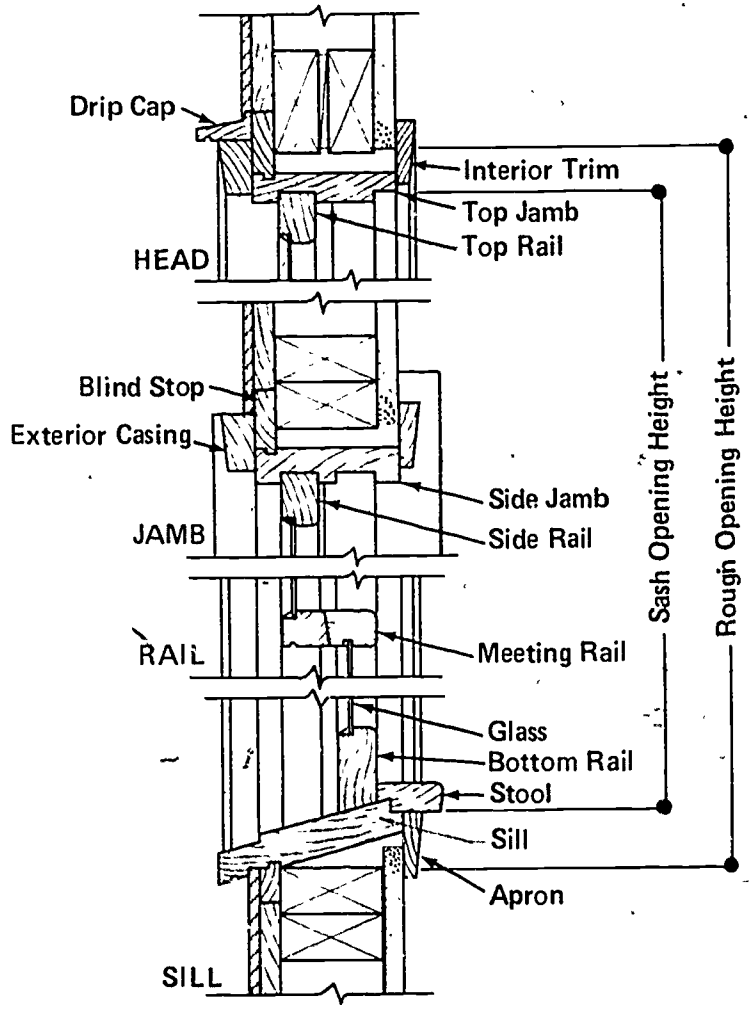

Double Hung Wood Window Section
Scale: 3" = 1'-0"

Aluminum Window Section

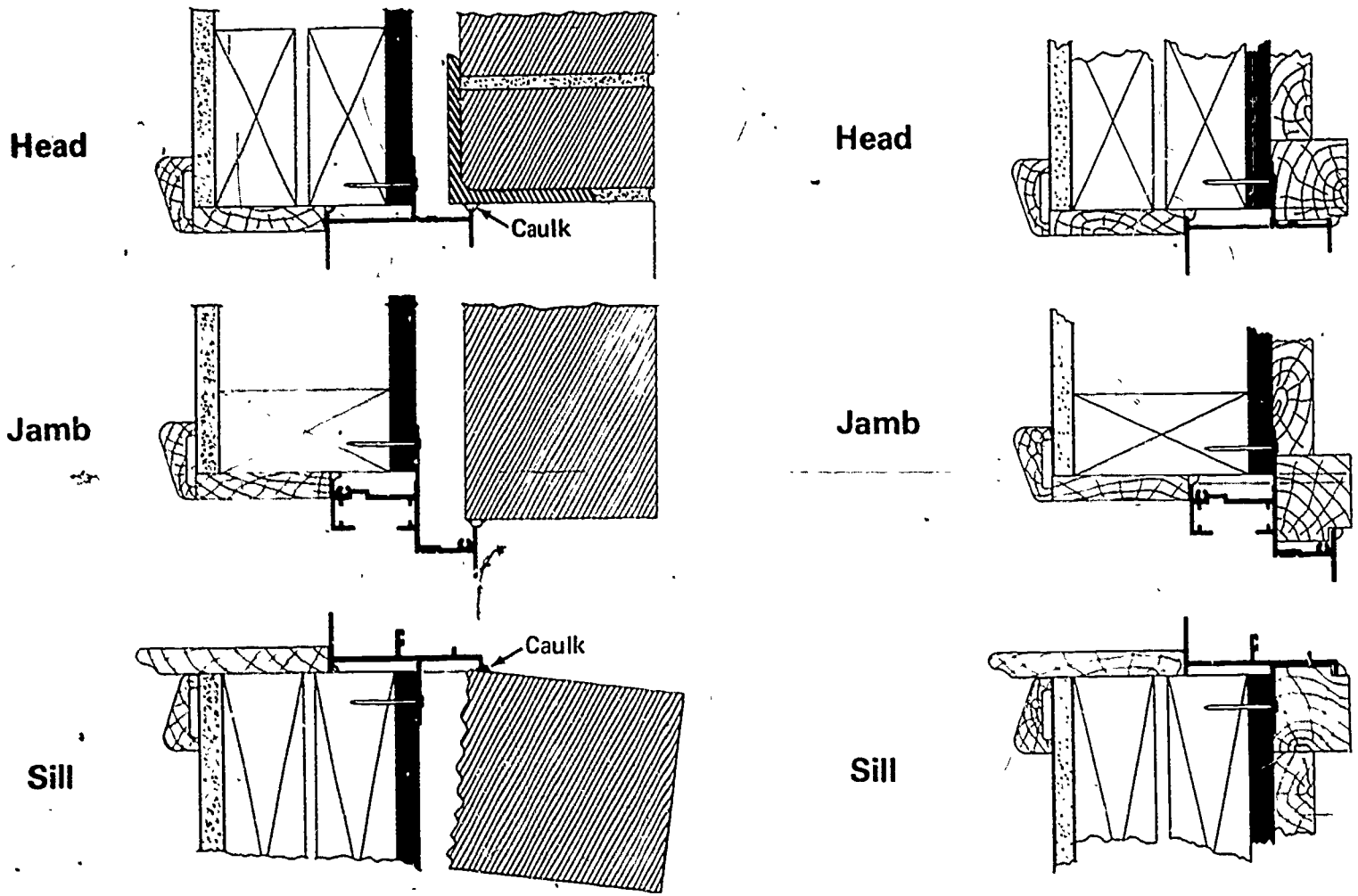

Brick Veneer

Frame

Drawing a Wall Section Detail

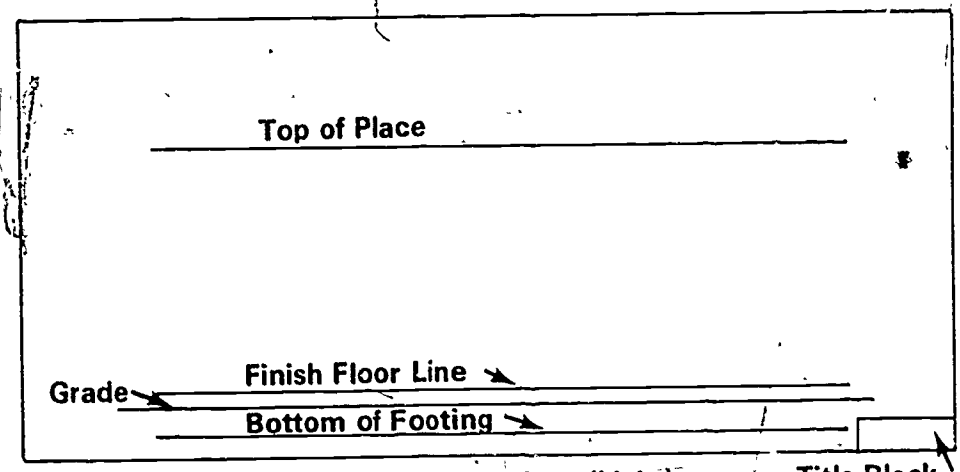

Step 1 - Draw Horizontal Projection Lines (Light)

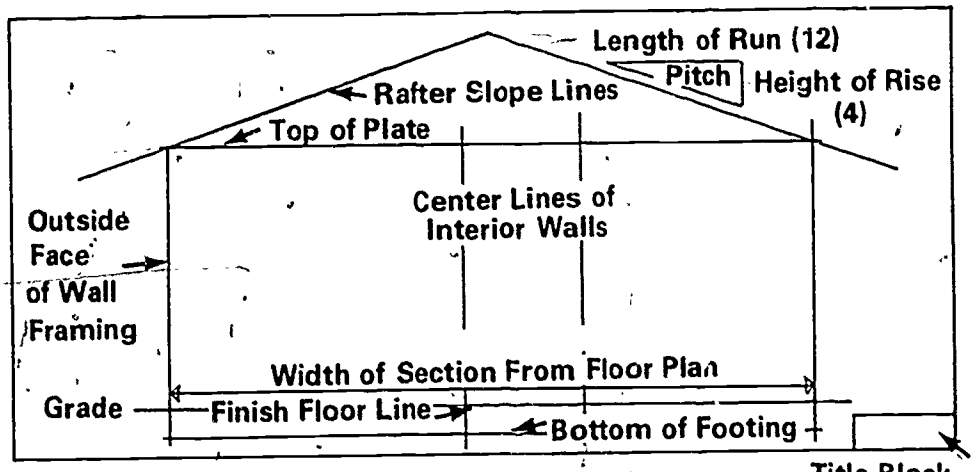

Step 2 - Draw Vertical Projection Lines (Light)

Drawing a Wall Section Detail

(Continued)

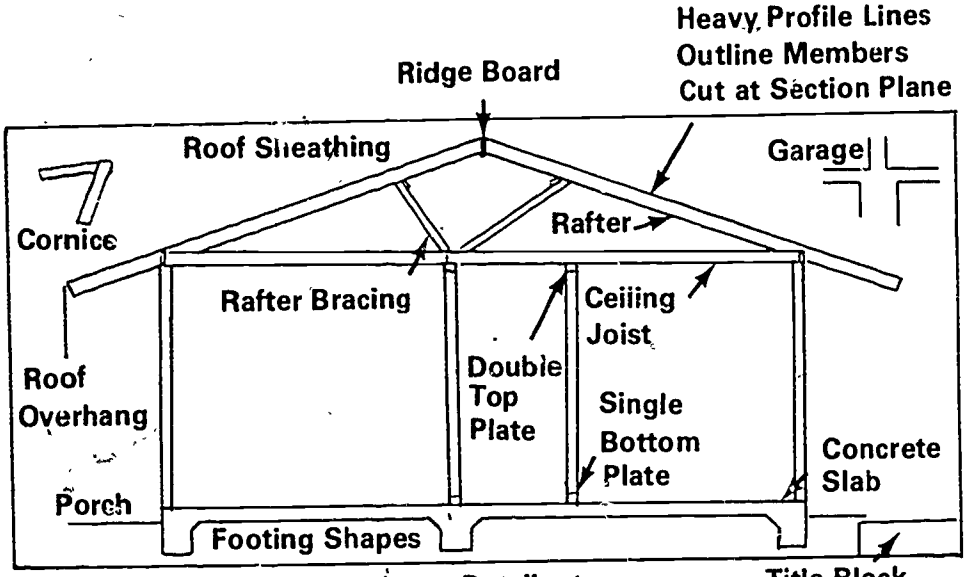

Step 3 - Add Material Thickness, Detail, etc.

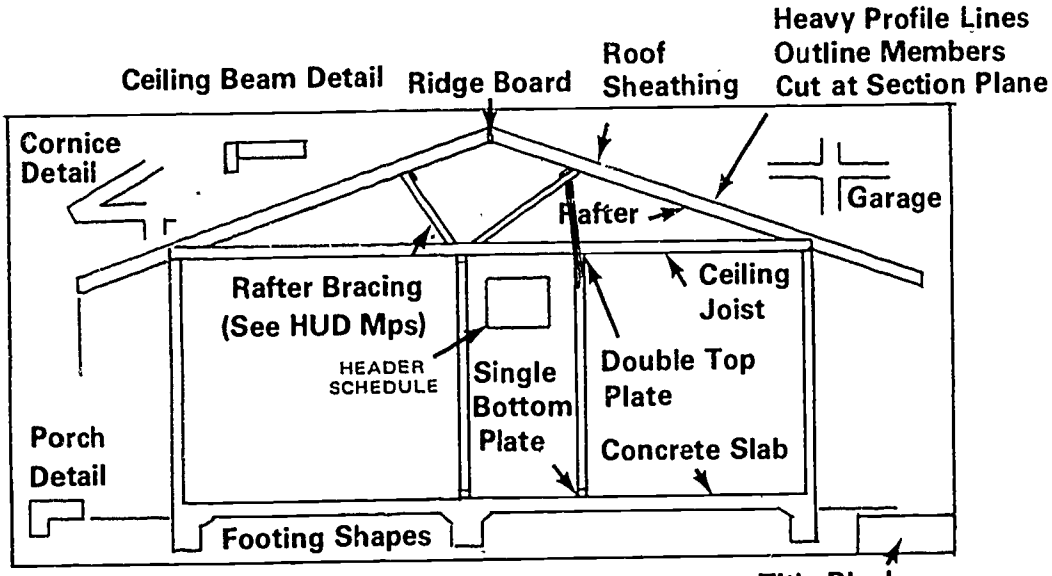

Step 4 - Add Other Detail Sections

DETAILS
UNIT IX

ASSIGNMENT SHEET #1--CONSTRUCT A STAIRWAY LAYOUT

Directions: Construct a stairway layout. The procedure in the following example may be used to determine the number and size of treads and risers for a set of stairs.

Example:

1. Determine the total distance from finished floor to finished floor and construct floor lines (Figure 1)

   (NOTE: This distance is the total rise.)

FIGURE 1

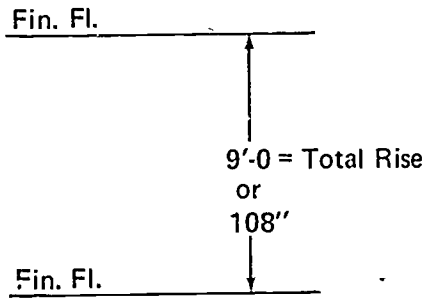

2. Determine number of risers and riser height

   Total rise 108" 7" = 15.43 risers (Must be whole number, so use 15)
   Total rise 108" 15 = 7.2" riser height

   (NOTE: 7" riser was used to fall between 30 and 35 degrees.)

3. Divide the total rise into 15 equal parts using a scale at an angle so that the zero mark is on the other finished floor (Figure 2)

FIGURE 2

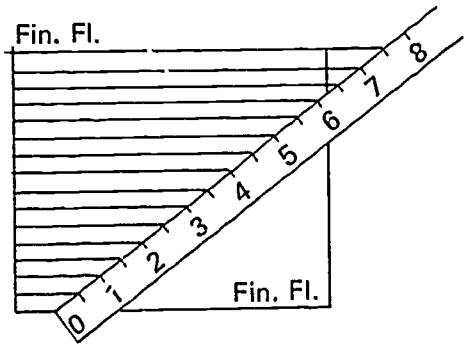

ASSIGNMENT SHEET #1

4. Determine tread size

Formula B	2 x unit rise + unit run = 24" to 25" 2 x 7.2 + 10.5" = 25.9" (exceeds 25") 2 x 7.2 + 10" = 24.4" (acceptable)
Formula A	Unit rise + unit run = 17" to 18" 7.2" + 10" = 17.2" (acceptable)
Formula C	Unit rise x unit run = 72" to 75" 7.2" x 10" = 72" (acceptable)

(NOTE: 10.5" tread size was used to fall between 30 and 35 degrees.)

5. Determine total run

Total run = Tread size x number of treads
Total run = 10" x 14" = 140" or 11'-8"

(NOTE: There is one less tread than the number of risers.)

6. Divide the total run into 14 equal parts in the same procedure using the zero mark and 7" mark and construct vertical line to form treads (Figure 3)

FIGURE 3

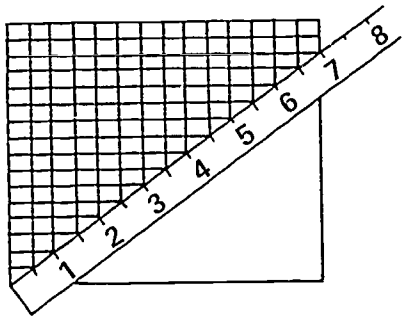

7. Darken in the tread and riser outline, and draw bottom edge of stringer (Figure 4)

FIGURE 4

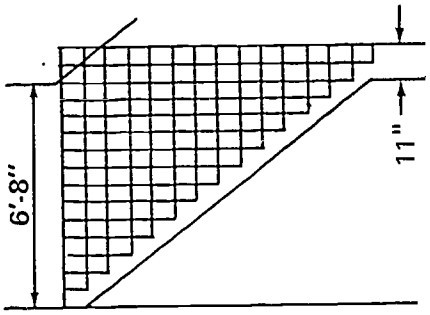

ASSIGNMENT SHEET #1

8. Determine stairwell opening length sum of head room and upper construction

   6'-8" + 11" = 91"

   Divide sum by unit rise

   91" ÷ 7.2 = 12.64 risers

   Length = risers x tread size

   12.64 x 10" = 126.4" = 10'-6 3/8"

9. Remove all construction lines; add dimensions and notes (Figure 5)

FIGURE 5

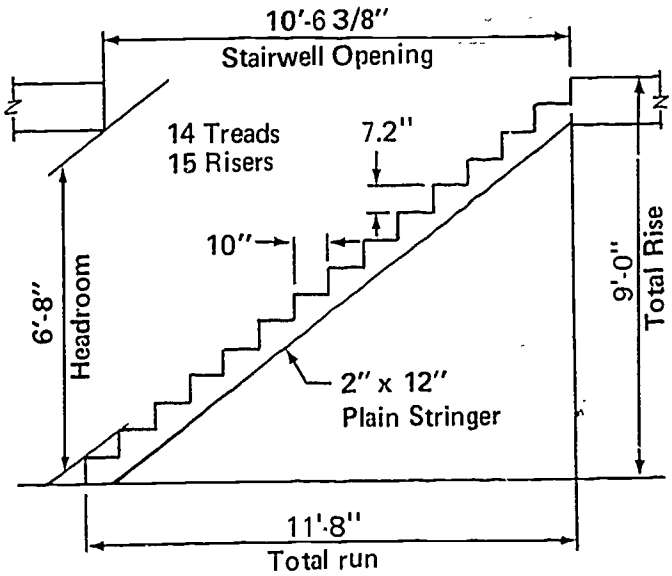

Problems:

A. Construct a stairway layout on the reverse side of this sheet using scale 1/2" = 1'-0" and the following information: finish floor to finish floor height is 9'-1", stair treads should be 10", and risers between 6 1/2" and 7 1/2". Add all dimensions and notes as shown in Figure 5.

B. Construct a stairway layout for your design project or another problem as assigned by instructor.

DETAILS
UNIT IX

ASSIGNMENT SHEET #2--DRAW FIREPLACE CONSTRUCTION DETAILS

Directions: Draw fireplace construction details for the problems which follow using a 1/2" = 1'-0" scale. The main drawings for fireplace details are in the section and plan view. The procedure in the following example is for drawing a fireplace section with a wood floor. Refer to *Residential Fireplace and Chimney Details* or *Architectural Graphic Standards* for fireplaces on concrete slab floors.

Example:

1. Calculate fireplace area (Figure 1)

   A = W x H

   A = 36 x 25

   A = 900 sq. inches

FIGURE 1

Area = h x w

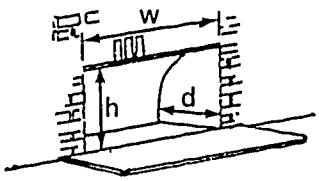

Single Face Fireplace

2. Calculate the effective flue area based on local code

   Flue area = 900 sq. inches x 1/10

   Area = 90 sq. inches

3. Select flue liner size from manufacturer's catalog (Figure 2)

   a. Find 36" width at bottom of chart

   b. Find 30" height at top left side of chart

   c. Follow height line across and width line up until they intersect

ASSIGNMENT SHEET #2

d. Flue size will be nearest curve above intersection; therefore, 10" x 18" is nominal flue lining size

FIGURE 2

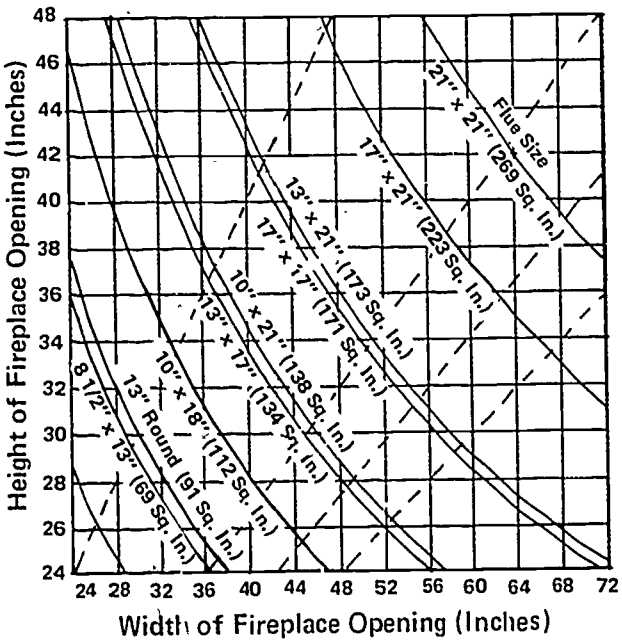

4. Draw the flue

a. If there are two different dimensions, use the smaller

b. Construct a circle with a diameter 1/2" or more larger than the inside diameter of the flue starting from the inside face of the flue lining (Figure 3)

c. At the horizontal diameter of the circle (HDC), draw a line 30° from the horizontal

FIGURE 3

ASSIGNMENT SHEET #2

d. On this 30° line, measure 4" to find the throat starting at the intersection of the circle and the 30° line

e. From the lower point of the 4" measurement, measure 6" (8" is recommended) to establish the top of the firebox opening (Figure 4)

FIGURE 4

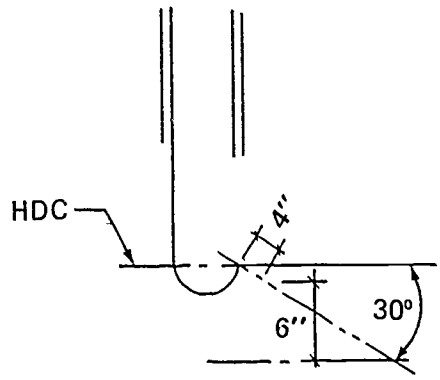

5. Establish the outside face of the chimney by measuring 6" from the interior face of the flue and the height of the firebox opening; measure 8" and construct the rear of the firebox with an arc using an irregular curve

6. Establish the hearth below the firebox opening by constructing a line 2" below the firebox opening (Figure 5)

FIGURE 5

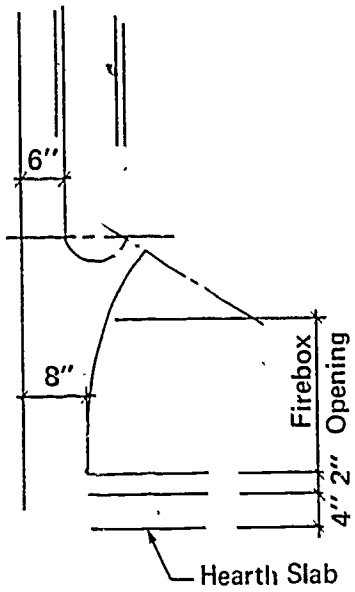

ASSIGNMENT SHEET #2

7. From the interior face of the firebox, measure 20" (or more) to establish the exterior face of the firebox, and measure in 4" from the exterior face of the firebox at the top of the firebox opening; establish a vertical line and measure a minimum 4" throat opening (Figure 6)

FIGURE 6

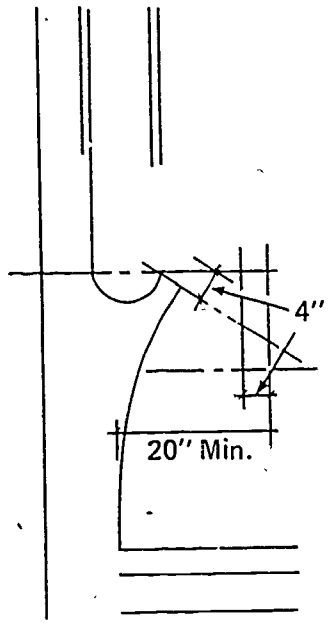

8. Draw a line at 60° minimum, intersecting the interior face of flue and the line established in step 7 to find the top of the throat opening (Figure 7)

FIGURE 7

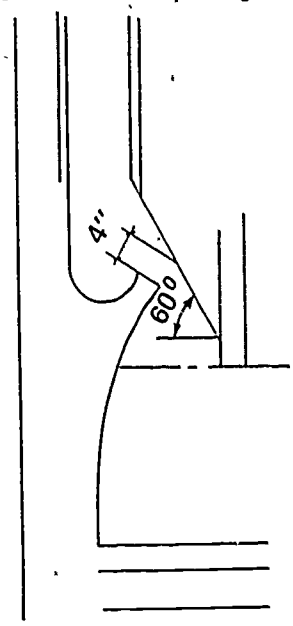

ASSIGNMENT SHEET #2

9. Draw in desired type of foundation according to local code (Figure 8)

FIGURE 8

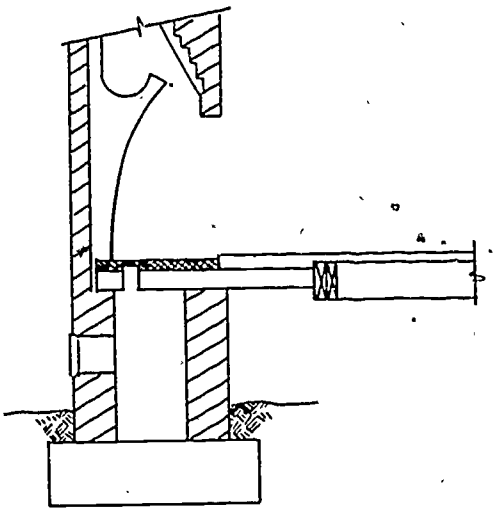

10. Establish wall and plate line and superimpose on fireplace in section; draw ceiling joist and allow for 2" air space between joists and brick

(NOTE: Draw a 1" x 6" flat over ceiling joist [for floors, notch floor joist] to support 3/16" x 1" straps if needed for local codes. Some states do not require this bond beam.) (Figure 9)

FIGURE 9

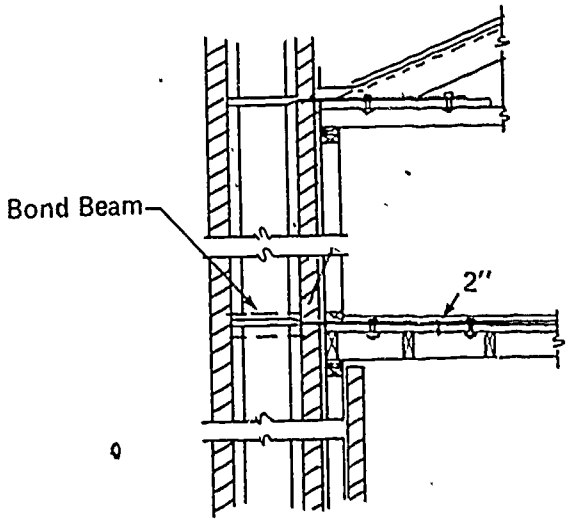

ASSIGNMENT SHEET #2

11. Locate rafters, place saddle, and complete motor cap and spark arrester

(NOTE: Be sure chimney extends far enough above roof to meet local codes.)

12. Complete necessary dimensions, call outs, and label details (Figure 10)

FIGURE 10

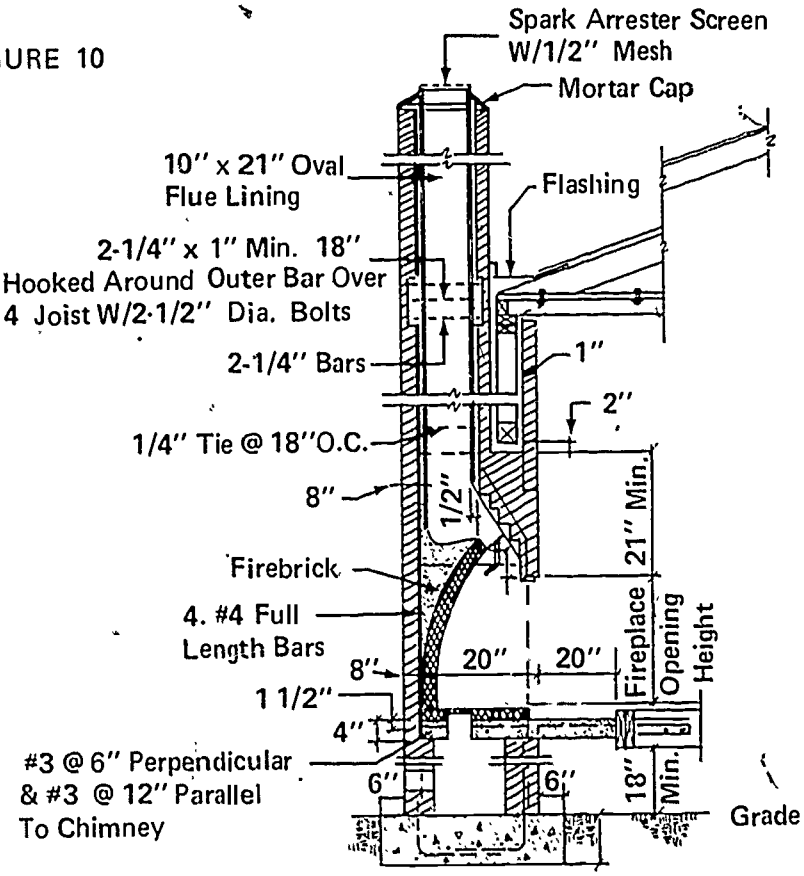

Problems:

A. Draw a 30" wide and 29" high single face fireplace on a wood floor using vellum and a scale of 1/2" = 1'-0". Refer to example for guidelines.

B. Draw a 35 5/16" wide and 39" high single face fireplace on a concrete slab floor using vellum and a scale of 1/2" = 1'-0". Refer to fireplace details in *Architectural Graphic Standards* for additional information.

(NOTE: Your instructor may assign an alternate problem of having you draw fireplace construction details for your design project.)

DETAILS
UNIT IX

ASSIGNMENT SHEET #3--DRAW TYPICAL CABINET DETAILS

Directions: Draw cabinet details on media with a 1/2" = 1'-0" scale. Because of a wide variety of cabinet constructions and local building practices, the procedure in the following example is given in general terms. The example shown is for a kitchen elevation. Elevation details for utility cabinets, vanity cabinets, wardrobes, and built-in bookcases are similar. Refer to Transparencies 8 and 9 for additional examples.

Example:

1. Using a scale of 1/2" = 1'-0", draw light construction lines for floor, toe space, countertop, bottom of wall cabinet, soffit line, and ceiling (Figure 1)

   (NOTE: Allow space between cabinet elevations for dimensions and reference title.)

FIGURE 1

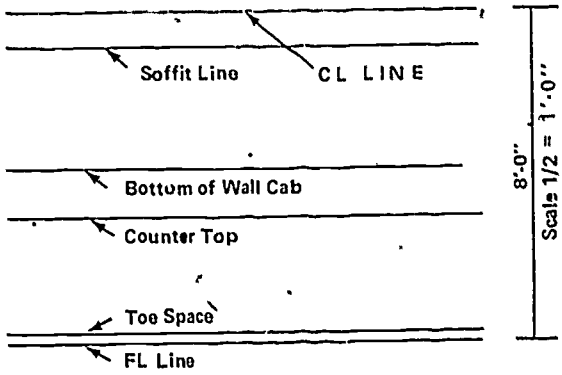

2. Construct vertical lines for ends of total length, thickness of wall, and base cabinets that are in section and space for windows or appliances (Figure 2)

   (NOTE: Refer to appliance manufacturers' catalogs for sizes.)

FIGURE 2

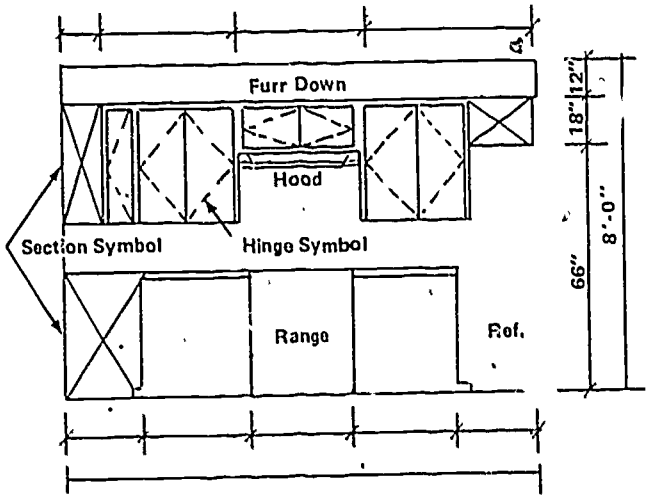

ASSIGNMENT SHEET #3

3. Construct stiles and rails, drawer shape, door shape, hinge symbol for doors, and complete notes and dimensions (Figure 3)

FIGURE 3

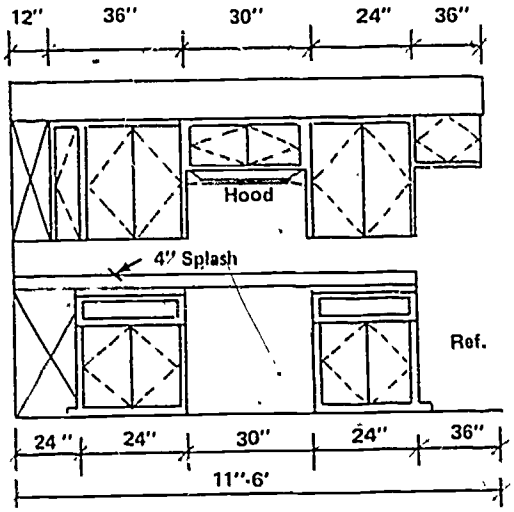

4. Check subtotal to equal overall total dimension

5. Erase construction lines, darken in lines, and place scale and reference symbol under elevation

Problem: Using a scale 1/2" = 1'-0", draw a plan and elevation of the necessary cabinet details for a residential home as assigned by instructor.

(NOTE: This may be for your design project or another residence.)

DETAILS
UNIT IX

ASSIGNMENT SHEET #4--DRAW DOOR AND WINDOW SECTION DETAILS

Directions: Draw door and window section details using the procedure in the following example. Refer to Transparencies 13 and 14 for illustrations.

Example:

(NOTE: Consult available manufacturers' catalogs regarding windows, doors, trim, and accessories, and standard window and door detail sheets.)

1. Establish scale, check overall space requirements on drawing for required drawings, and allow for titles and scale

   (NOTE: Use 1 1/2" or 3" = 1'-0".)

2. Make constructions of horizontal and vertical sections through the doors and windows; show these sections with keying symbols on the elevations

   (NOTE: These may not be required for all residential buildings.)

3. Construct the various sections in their proper relationship to the walls; add weather-proofing, flashing, sills, thresholds, mullions, and trim

4. Draw main outlines of window and door parts, dimension as required, place notes, and draw in material texture

5. Complete the title or reference symbol and scale

Problem: Construct window and door details from manufacturer's catalog as assigned by instructor.

(NOTE: This may be for your design project or another residence.)

DETAILS
UNIT IX

ASSIGNMENT SHEET #5--DRAW A WALL SECTION DETAIL

Directions: Draw a wall section detail using the procedure in the following example. Building sections are views taken through the structure at points which will best show the structural parts of the building. Sections are taken vertically, as with a typical wall section, or horizontally, as with a floor plan. Often, when the building is complex, several sections may be needed. The procedure in the example is for drawing a typical transverse section. Several other details are added.

Example:

(NOTE: Consult manufacturers' catalogs for all information concerning the sizing and spacing of all building members, all materials used in structure, design sketches, examples of scale drawings of a typical wall section, and examples of sections of all component parts to be used in the section.)

1. Using scale 3/4" = 1'-0", construct grade, top and bottom of footing, height of plate, and finish floor (Figure 1)

FIGURE 1

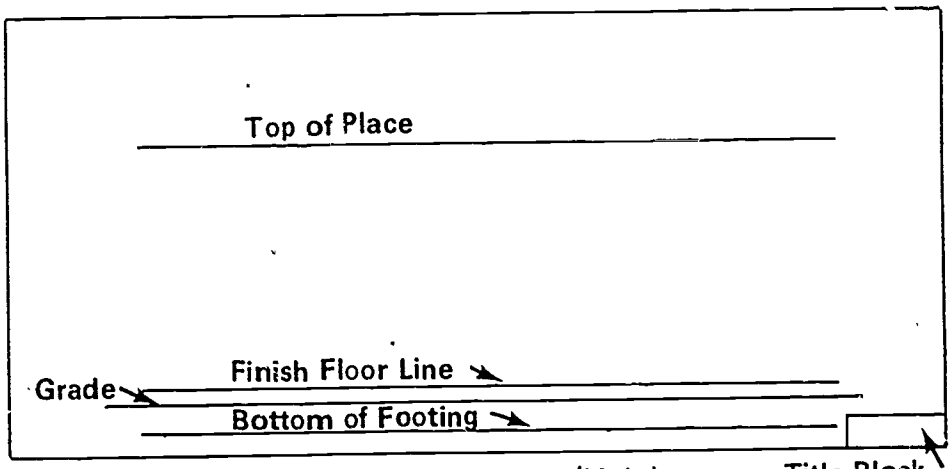

Step 1 - Draw Horizontal Projection Lines (Light)

ASSIGNMENT SHEET #5

2. Construct outside walls, width of footings, thickness of walls, slope, and thickness of roof (Figure 2)

FIGURE 2

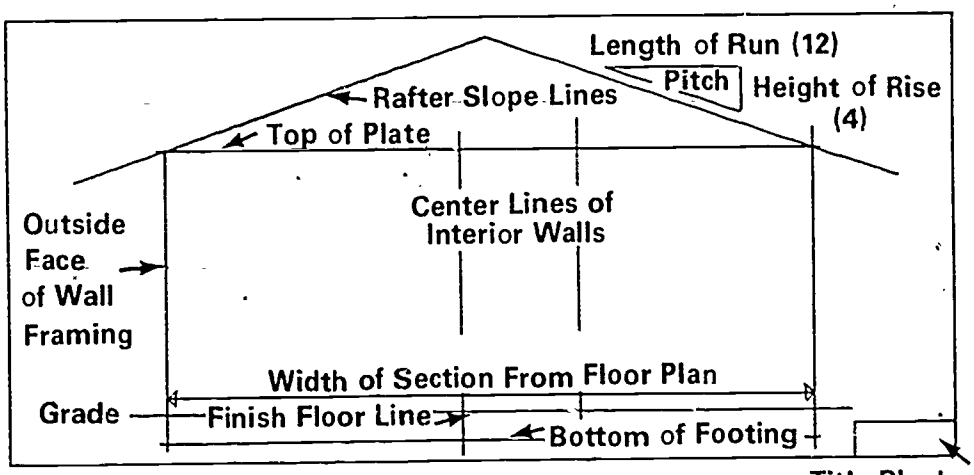

Step 2 - Draw Vertical Projection Lines (Light)

3. Construct outlines of footings, walls, joists, rafters, and other related footing, cornice, beams, window, and door details; add material thickness to details (Figure 3)

FIGURE 3

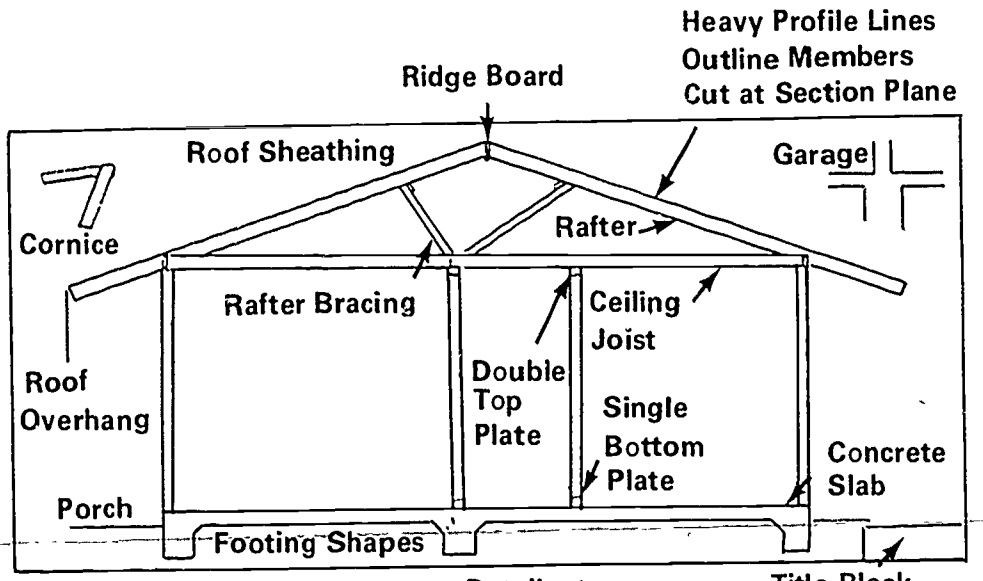

Step 3 - Add Material Thickness, Detail, etc.

ASSIGNMENT SHEET #5

4. Erase construction lines, add dimensions, add notes or call outs for all materials and structural parts, darken in lines, add shading to concrete, and complete titles for all details (Figure 4)

FIGURE 4

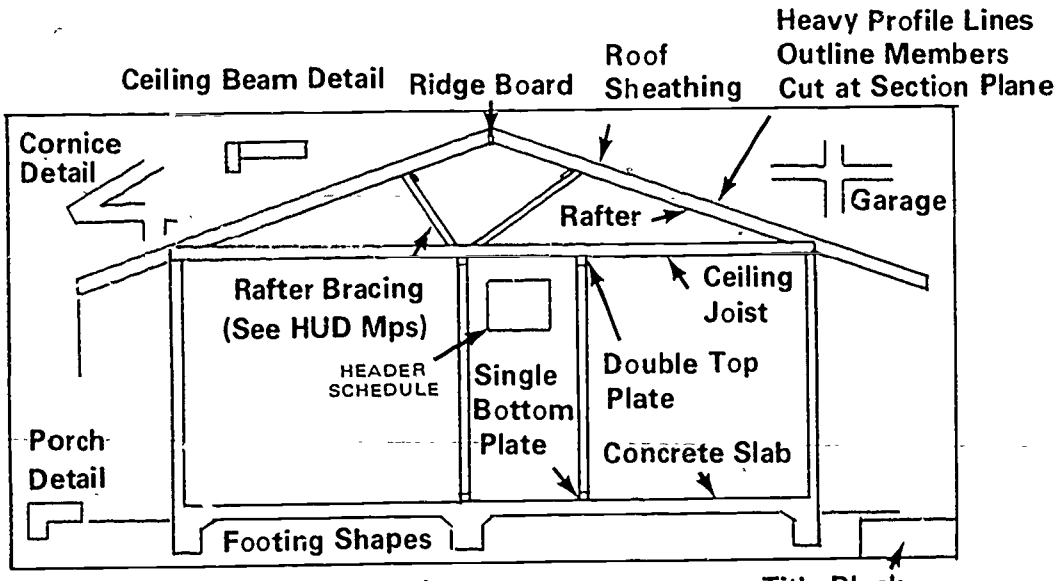

Step 4 - Add Other Detail Sections

Problem: Construct a typical wall section detail on C size media using proper scale for a residential home as assigned by instructor.

(NOTE: This may be for your design project or another residence.)

DETAILS
UNIT IX

NAME _____

TEST

1. Match the terms on the right with the correct definitions.

_____a. Vertical member from bottom of one tread to the tread above

_____b. Horizontal member extending from face of one riser to the face of an adjoining one, plus nosing

_____c. Portion of the tread which projects beyond the riser surface

_____d. Vertical distance from the top of one tread to the next tread

_____e. Horizontal distance from the face of one riser to the face of the next riser

_____f. Stairs which have a wall on both sides

_____g. Stairs which have no wall on one or both sides

_____h. Decorative ledge above the fireplace

_____i. Two sloping surfaces meeting in a ridge and used between the back side of chimney and a sloping surface

_____j. Type of hard, heat-resistant masonry which has been fired and kiln dried

_____k. The assembly of materials that encloses the metal flue

_____l. Cement and sand mix placed on top of chimney for weatherproofing

_____m. Opening in a fireplace that is controlled by a damper to provide passage of smoke and hot-air gases up the chimney

_____n. Area in the ash pit used for easier removal of ashes

_____o. A metal cap with screen placed on chimney flue to retain sparks in flue

1. Firebrick
2. Unit rise
3. Transverse wall section
4. Nosing
5. Throat
6. Stile
7. Riser
8. Mantel
9. Soffit
10. Cement wash
11. Unit run
12. Furring
13. Spark arrester
14. Longitudinal wall section
15. Saddle

_____p. A vertical face frame member of cabinet trim

_____q. A horizontal face frame member of cabinet trim

_____r. Wood strips fastened to a wall or ceiling for attaching dry wall above wall cabinet

_____s. All storage spaces that are not part of the structure and may be job-built, shop-built, or manufactured

_____t. The underside of a furred down area above wall cabinets

_____u. A section that runs through the narrow width of a building

_____v. A section that runs through the length of a building

16. Clean out
17. Tread
18. Open stairs
19. Cabinet work
20. Closed stairs
21. Chimney chase
22. Rail

2. Identify features of a stairway.

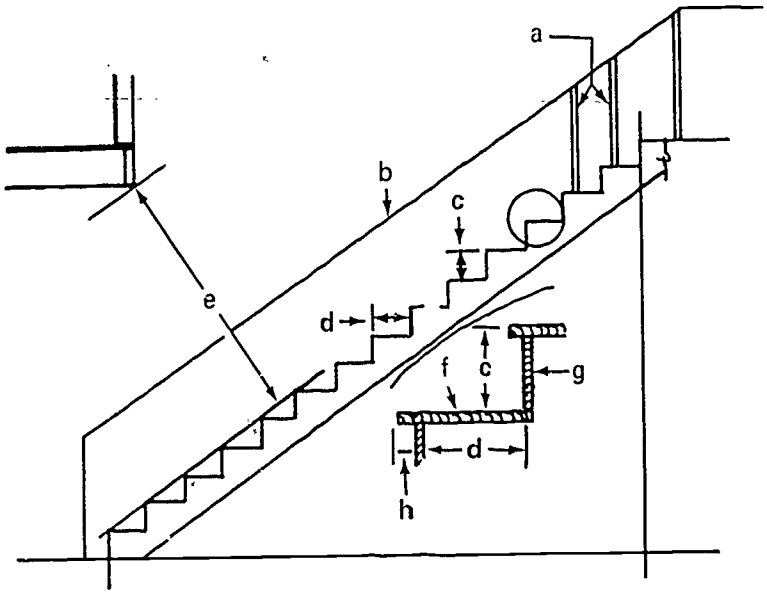

a. _____ b. _____

c. _____ d. _____

e. _____ f. _____

g. _____ h. _____

3. Identify types of stairways.

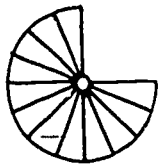

a. _____ b. _____

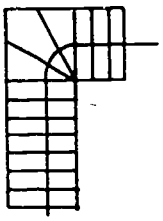

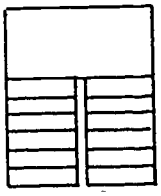

c. _____ d. _____

4. Complete the following stairway formulas.

a. _____ = 17" to 18"

b. _____ x unit rise + unit run = 24" to 25"

c. Unit rise x unit run = _____

5. Distinguish between stair slopes by placing an "X" next to the recommended stair slope.

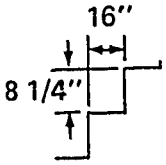

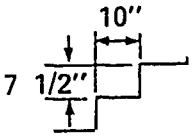

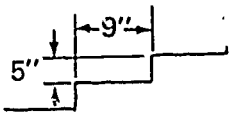

a. _____ b. _____ c. _____

6. Label components of a fireplace.

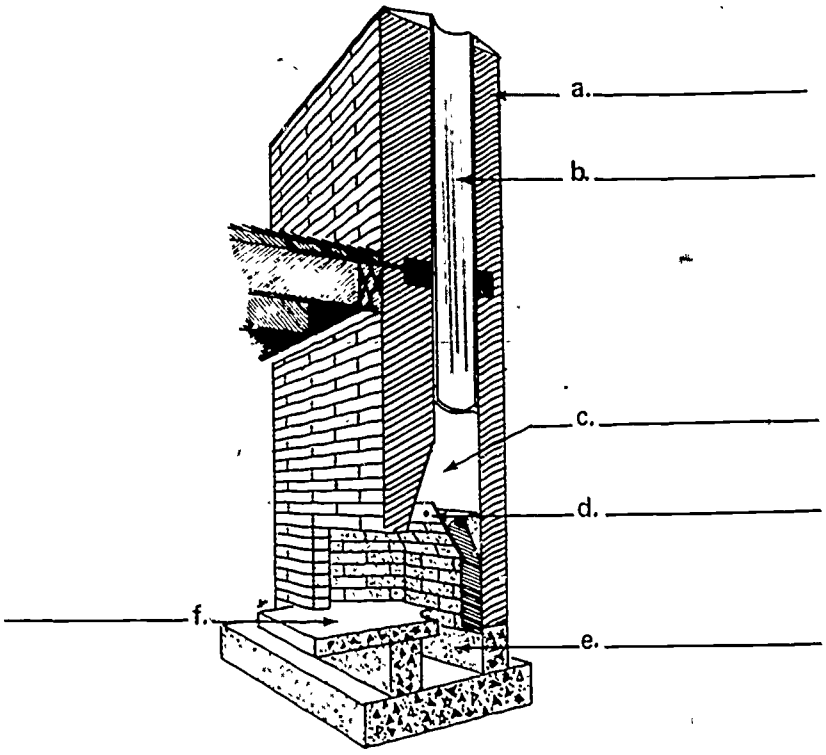

7. Identify types of fireplaces.

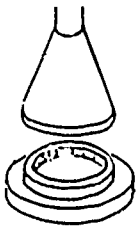

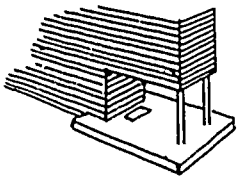

a. _____ b. _____

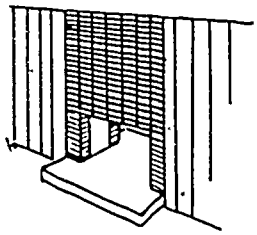

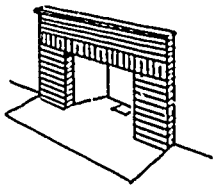

c. _____ d. _____

8. Distinguish between characteristics of masonry fireplaces and metal prefabricated fireplaces by placing an "X" next to the characteristics of masonry fireplaces.

_____a. Cost less to install

_____b. Sizes of wood used for burning is limited

_____c. Last a lifetime

_____d. Are expensive to install

_____e. Can burn larger sizes of wood

_____f. Generally heat up faster and give more heat

9. Select true statements concerning requirements for fireplace sizing and detailing by placing an "X" in the appropriate blanks.

_____a. There are no building code requirements for prefabricated fireplaces

_____b. Framing lumber should not come closer than 5' from chimney

_____c. Extend chimney 2' higher than any portion of a roof located within 10'

_____d. Each fireplace does not need a separate flue

_____e. For proper draft, the area of the flue should be less than one-fiftieth the area of the fireplace opening

_____f. Prefabricated fireplace elevations do not need to be drawn

_____g. Design of brick masonry fireplace should be based upon 4" module to reduce the amount of brick cutting

10. Match types of fireplace details drawings on the right with the correct uses.

_____a. Shows size of fireplace opening, trim, hearth, and mantel dimensions

_____b. Shows assembly and details from footing through ceiling to cap height above finished roof level

_____c. Commonly shown on floor plan that shows overall size and location dimensions of fireplace

1. Section view
2. Plan view
3. Front elevation view

11. Label parts of a wood window.

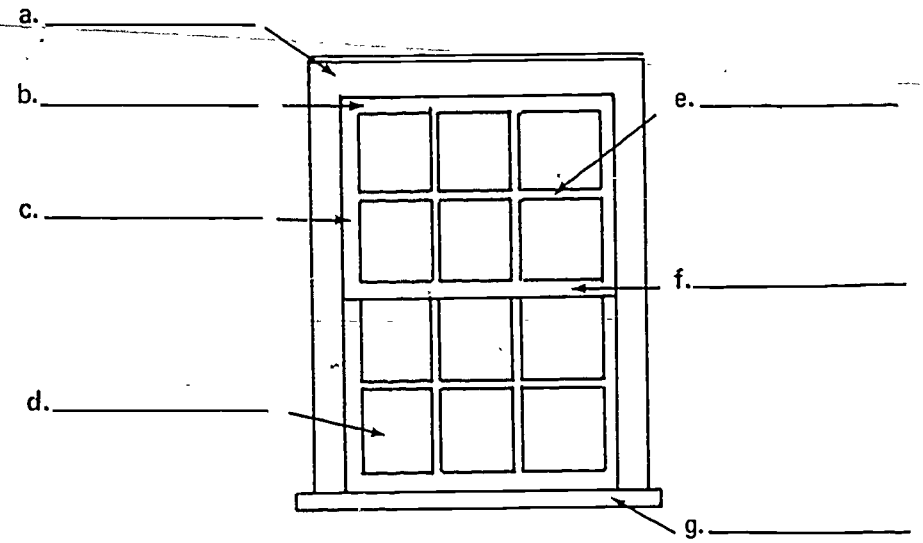

12. List the four major parts of a window section drawing.

a. _____

b. _____

c. _____

d. _____

13. List the three major parts of a door section drawing.

a. _____

b. _____

c. _____

14. Arrange in order the steps for drawing a wall section detail by placing the correct sequence numbers in the appropriate blanks.

_____a. Add material thickness and primary detail

_____b. Add other detail sections

_____c. Draw vertical projection lines lightly

_____d. Draw horizontal projection lines lightly

15. Demonstrate the ability to:

a. Construct a stairway layout.

b. Draw fireplace construction details.

c. Draw typical cabinet details.

d. Draw door and window section details.

e. Draw a wall section detail.

(NOTE: If these activities have not been accomplished prior to the test, ask your instructor when they should be completed.)

DETAILS
UNIT IX

ANSWERS TO TEST

1.
a. 7
b. 17
c. 4
d. 2
e. 11
f. 20
g. 18
h. 8
i. 15
j. 1
k. 21
l. 10
m. 5
n. 16
o. 13
p. 6
q. 22
r. 12
s. 19
t. 9
u. 3
v. 14

2.
a. Balusters
b. Hand rail
c. Unit rise
d. Unit run
e. Clearance
f. Tread
g. Riser
h. Tread nosing

3.
a. Spiral
b. Straight run
c. L-type with winders
d. U-type

4.
a. Unit run + unit run
b. 2
c. 72" to 75"

5. b

6.
a. Chimney
b. Flue
c. Smoke chamber
d. Damper
e. Ash pit
f. Hearth

7.
a. Prefabricated
b. Three face
c. Double face–opposite sides
d. Single face

8. c, d, e

9. c, g

10.
a. 3
b. 1
c. 2

11. a. Top jamb
    b. Top rail
    c. Side rail or sash
    d. Glass
    e. Muntin
    f. Meeting rail
    g. Sill

12. a. Head
    b. Jamb
    c. Rail
    d. Sill

13. a. Head
    b. Jamb
    c. Sill

14. a. 3
    b. 4
    c. 2
    d. 1

15. Evaluated to the satisfaction of the instructor

PLUMBING
UNIT X

UNIT OBJECTIVE

After completion of this unit, the student should be able to identify parts of a waste disposal system and complete charts of piping, fitting, and fixture symbols The student should also be able to calculate size of building lines and construct plumbing drawings. This knowledge will be evidenced by correctly performing the procedures outlined in the assignment sheets and by scoring 85 percent on the unit test.

SPECIFIC OBJECTIVES

After completion of this unit, the student should be able to:

1. Match terms related to plumbing with the correct definitions.
2. Complete a list of types of heating used in plumbing systems.
3. Name the major parts of a plumbing system.
4. Identify parts of a waste disposal system.
5. Match types of materials in a waste disposal system with the correct uses.
6. List the classifications of vents.
7. Select true statements concerning waste disposal systems.
8. Name the parts of a water system.
9. Select true statements concerning water systems.
10. Complete a chart of piping symbols and abbreviations.
11. Complete a chart of pipe fitting and valve symbols.
12. Match fixture plan symbols with the correct names.
13. Select true statements concerning plan drawings.
14. Select true statements concerning riser drawings.
15. Select true statements concerning isometric drawings.
16. Demonstrate the ability to:
    a. Calculate the size of a building sewer line.
    b. Construct plumbing drawings of a building drain system.
    c. Construct plumbing drawings for a residential building.
    d. Design a septic system.

PLUMBING
UNIT X

SUGGESTED ACTIVITIES

I. Provide student with objective sheet.

II. Provide student with information and assignment sheets.

III. Make transparencies.

IV. Discuss unit and specific objectives.

V. Discuss information and assignment sheets.

VI. Using small PVC pipe fittings, construct a three-dimensional scale model of a plumbing system for a residence.

VII. Take students on a field trip to look at a house under construction while the plumbing is being installed.

VIII. Provide samples of plumbing drawings of a residence and small commercial building.

IX. Show samples of types of fittings.

X. Have available for the students *HUD Minimum Property Standards* and *The BOCA Basic Plumbing Code* books for use in Assignment Sheet #4.

XI. Give test.

INSTRUCTIONAL MATERIALS

I. Included in this unit:

A. Objective sheet

B. Information sheet

C. Transparency masters

1. TM 1--Solar Plumbing System
2. TM 2--Waste Riser Diagram
3. TM 3--Waste Plumbing Plan
4. TM 4--Plumbing Location Design
5. TM 5--Septic System
6. TM 6--Water Riser Diagram

7. TM 7--Water and Gas Plumbing Plan

8. TM 8--Plumbing Symbols

9. TM 9--Fixture Isometric Plumbing Layout

10. TM 10--Waste Plumbing Isometric Drawing

D. Assignment sheets

1. Assignment Sheet #1--Calculate the Size of a Building Sewer Line

2. Assignment Sheet #2--Construct Plumbing Drawings of a Building Drain System

3. Assignment Sheet #3--Construct Plumbing Drawings for a Residential Building

4. Assignment Sheet #4--Design a Septic System

E. Answers to assignment sheets

F. Test

G. Answers to test

II. References:

A. Brown, Walter C. *Blueprint Reading for Construction Residential and Commercial.* South Holland, IL 60473: Goodheart-Willcox Co., Inc., 1980.

B. Goodban, William T. and Jack J. Hayslett. *Architectural Drawing and Planning.* St. Louis: Gregg Division/McGraw-Hill Book Co., 1979.

C. Hepler, Donald E. and Paul I. Wallach, *Architecture Drafting and Design.* St. Louis: Gregg Division/McGraw-Hill Book Co., 1977.

D. *HUD Minimum Property Standards.* Washington, D. C.: U. S. Department of Housing and Urban Development, 1973.

E. Kicklighter, Clois E. and Ronald J. Baird. *Architecture Residential Drawing and Design.* South Holland, IL 60473: Goodheart-Willcox Co., Inc., 1973.

F. *Manual of Acceptable Practices to the HUD Minimum Property Standards.* Washington, D.C.: U. S. Department of Housing and Urban Development, 1973.

G. Ramsey, Charles G. and Harold R. Sleeper. *Architectural Graphic Standards.* New York: John Wiley & Sons, Inc., 1970.

H. Spence, William P. *Architecture Design - Engineering - Drawing.* Bloomington, IL: McKnight Publishing Co., 1979.

I. Weidhaas, Ernest R. *Architectural Drafting and Construction.* Boston: Allyn and Bacon, Inc., 1974.

J. *Southern Standard Building Code.* Birmingham, AL: Southern Building Code Congress International, Inc., 1973.

K. *Uniform Plumbing Code.* Los Angeles: Western Plumbing Officials Association, 1976.

PLUMBING
UNIT X

INFORMATION SHEET

I. Terms and definitions

A. Uniform Plumbing Code--Plumbing design and installation requirements published by the International Association of Plumbing and Mechanical Officials

B. BOCA Basic Plumbing Code--Plumbing design and installation requirements published by the Building Officials and Code Administrators

C. Soil pipe--Receives the solid waste from water closets and discharges it to the building drain

D. Waste pipe--Receives the waste from sinks, lavatories, bathtubs, washers, or other fixtures not receiving solid waste and discharges it in the soil pipe or building drain

E. Building drain--Receives discharge from soil and waste pipes and carries it to the building sewer

F. Building sewer--Begins outside of the building and carries the waste to the sewer in the street, alley easement, or septic system

G. Stack--Any vertical pipe, such as soil pipe, waste pipe, or vent pipe

H. Vent stack--Vertical vent pipe used primarily to provide air circulation on any part of the building drainage system to eliminate emptying a trap

I. Trap--Provides a liquid seal to prevent passage of sewer gases in the building

J. Fixture--Equipment that is attached to plumbing in a building

K. Fixture unit--Measure of flow rate in a plumbing system

(NOTE: One fixture unit equals 1 cubic foot of liquid per minute. There are 7 1/2 gallons in a cubic foot.)

L. Septic tank--Used to retain solids in the sewage flowing through tank long enough for decomposition of settled solids by bacterial action

M. Drain field--A system of below ground perforated pipe surrounded by coarse aggregate through which septic tank liquid waste seeps into the soil

(NOTE: This field is also called an absorption field.)

N. Leader--A pipe draining water from the roof to a storm sewer

O. Storm sewer--A pipe or conduit used to drain surface water

INFORMATION SHEET

P. Riser--Vertical pipe that connects from water main within a building to a fixture

Q. Cleanout--An elbow fitting with a plug that will permit cleaning the sewer system

R. Fitting--A standardized part that connects pipe and flow in a pipe in a plumbing system

S. Hose bibb--A threaded faucet

(NOTE: Freeze-proof hose bibbs are recommended in freezing climates.)

T. Plastic pipe--Polyvinyl chloride pipe that is perforated and used for drain lines (laterals) in a septic system

U. Sewage disposal system--All piping and fittings from all fixtures that conduct waste water to a public sewer or septic system

V. Water system--All supply pipes that conduct water from the water main to lavatories, bathtubs, hot water heaters, or water closets

W. Air chamber--Provides air space to reduce water hammer

X. Rough-in-Plumbing work performed before concrete slab is poured and before wall covering materials are placed on wall

Y. Percolation (perc) test--Test as specified by BOCA code to determine the rate of drop of a water surface in a test hole

II. Types of heating used in plumbing systems

A. Fuel oil

B. Total electric

C. Gas

D. Solar (Transparency 1)

III. Major parts of a plumbing system

A. Waste disposal system

B. Water system

IV. Parts of a waste disposal system (Transparencies 2 and 3)

A. Building sewer

B. Building drain

C. Vent stack

INFORMATION SHEET

D. Stack

E. Trap

F. Waste pipe

G. Soil pipe

H. Fixture

I. Cleanout

V. Types of materials in a waste disposal system and uses

A. Plastic--Used for soil pipe, waste pipe, vents, building sewer, A/C drain, and drain-field for a residential house

B. Vitrified clay tile--Used for building sewer, drain field, and public sewer lines

C. Cast iron--Used for all soil lines from within a residence or commercial building to the building drain lines

D. Copper--Used for waste and vent pipes and fresh water

E. Galvanized steel--Used for vent pipes

F. Lead--Used for roof flashing, vent pipes, and industrial waste pipes

VI. Classifications of vents

A. Soil and waste

B. Individual fixture

VII. Waste disposal systems (Transparencies 2, 3, 4, and 5)

A. Use larger than 2 x 4 studs to conceal cast iron soil stack pipes

B. All copper soil and waste piping above ground should be type M

C. Waste pipe is usually smaller in diameter than soil pipe

D. It is economical to locate second floor bathroom above first floor bath

E. It is economical to locate kitchen and bath fixtures back-to-back (Transparency 4)

F. Each fixture should be separately trapped

G. All fixtures that have traps must be vented

H. Individual vents should not be less than 1 1/4" (32 mm) in diameter

INFORMATION SHEET

I. Septic system must be sized according to local or state health code (Transparency 5)

J. The size of drain field must be sized by local or state health department (Transparency 5)

K. A soil or waste stack should not be smaller than the largest building drain connected to it

VIII. Parts of a water system (Transparencies 6 and 7)

A. Hot water

B. Cold water

(NOTE: Fresh water may be treated with a water softener.)

IX. Water systems (Transparencies 6 and 7)

A. Valves should be located in the system so various parts can be shut off without turning off complete system

B. All water heaters must have a pressure relief valve

C. The main water supply line to the building should be buried below the frost line

D. Plastic pipe is not approved for all local codes

E. If plumbing plan can be misinterpreted, an isometric drawing of installation must be made

F. Drains must be provided for water softener and hot water relief lines

G. All hot and cold water piping inside the building under concrete floors should be type L copper

X. Piping symbols and abbreviations

	Abbreviations	Symbols
Soil, waste pipe (above grade)	SW	————
Soil, waste pipe (below grade)	SW	— — — —
Vent	V	- - - - - - -
Cold water	CW	— - — - —
Soft water	SW	—— SW ——

INFORMATION SHEET

Hot water	HW	
Air conditioning drain	ACD	D
Gas - low pressure	G	G G
Meter		M
Cleanout	CO	CO FLOOR PIPE
Leader	L	L
Hose bibb or freeze-proof		FP HF HB

XI. Pipe fitting and valve symbols

Type of pipe fitting or valve	Screwed	Bell & Spigot	Isometric
Elbow - 90 deg.			
Elbow - 45 deg.			
Elbow - turned up			
Elbow - turned down			
Lateral			
Gate valve			
Globe valve			
Tee straight size			
Tee - outlet up			
Tee - outlet down			

XII. Fixture plan symbols (Transparency 8)

	Abbreviations	Symbols
Hot water tank	HWT	H WT
Water closet	WC	WC
Bathtub		
Shower stall		
Urinal		
Kitchen sink		

INFORMATION SHEET

Lavatory	LAV
Vanity	
Washer	W
Dryer	D
Dishwasher	DW

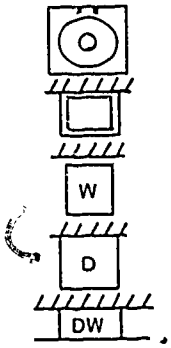

XIII. Plan drawings (Transparencies 3 and 7)

A. Plan view shows drawing as viewed from directly above (Figure 1)

FIGURE 1

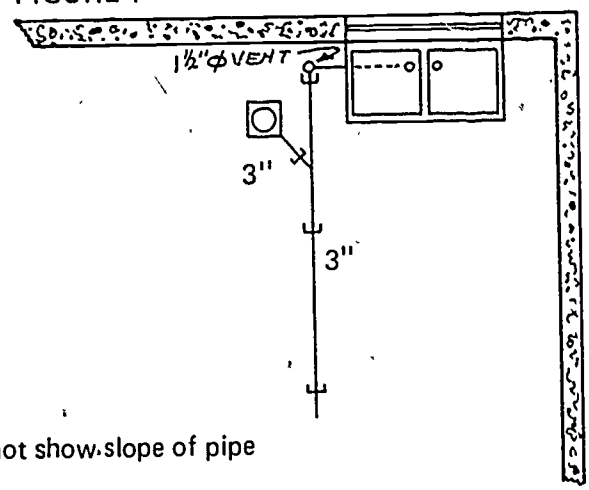

B. Plan view does not show slope of pipe

C. Plan view can be used to determine:

1. Length of pipe
2. Location and types of fittings
3. Location of floor drains
4. Location of cleanouts
5. Direction of flow
6. Labor estimates

D. The plan drawing can serve as a record after the floor has been poured

XIV. Riser drawings (Transparencies 2 and 6)

A. Riser drawing is a sectional view (schematic) through a building showing the piping system or part of a system

INFORMATION SHEET

B. Riser drawing is not a true picture due to drawing being two dimensional (Figure 2)

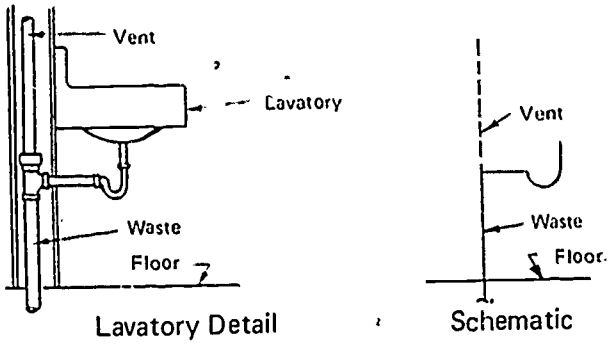

FIGURE 2

C. Riser drawing is valuable in determining code and inspection requirements (Figure 3)

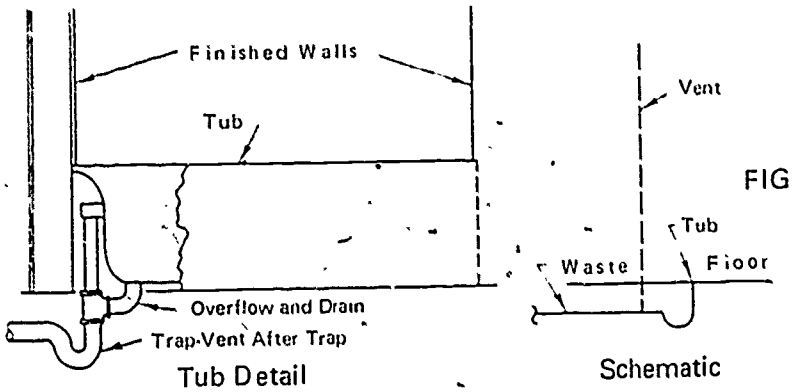

FIGURE 3

XV. Isometric drawings (Transparencies 9 and 10)

A. Isometrics are used to show a three dimensional picture in one drawing

B. Isometrics combine the plan and elevation into one drawing

C. Pipes that are vertical on a plan or elevation, such as soil, water, and vent stacks, remain vertical in the isometric drawing

INFORMATION SHEET

D. Pipes that are horizontal on a plan or elevation are shown at a 30° angle in the isometric drawing (Figure 4)

FIGURE 4

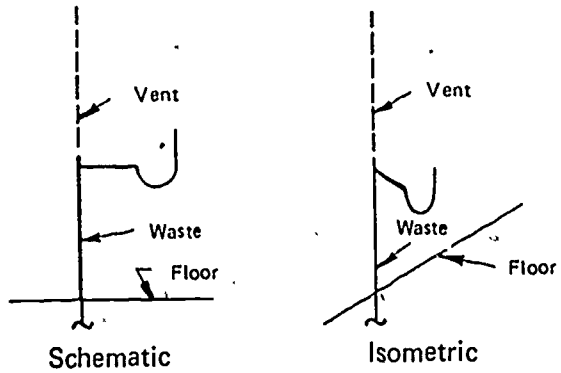

Example: This house, in outline form, would show the drainage system as horizontal lines, 30°; vertical lines, 90° (Figure 5)

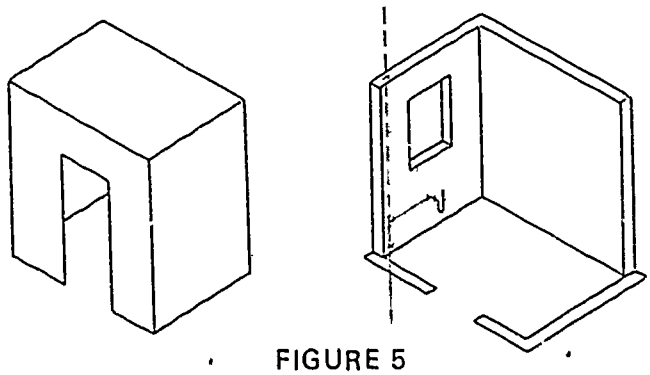

FIGURE 5

(NOTE: The following is the same system without the house lines. See Figure 6.)

FIGURE 6

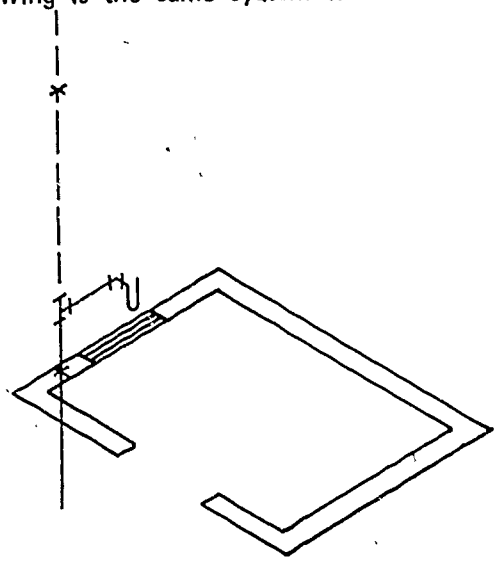

INFORMATION SHEET

E. Careful consideration to detail can indicate type of fitting and direction of flow (Figure 7)

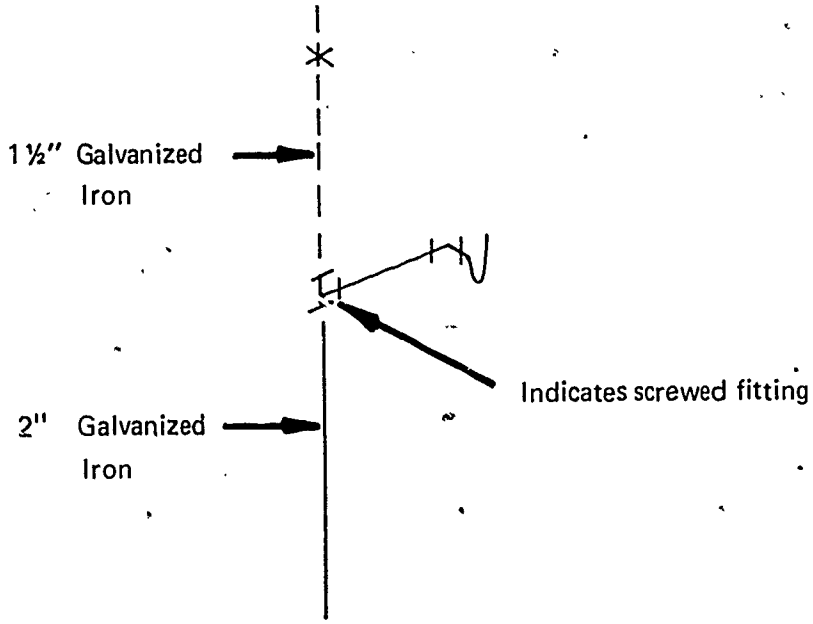

FIGURE 7

Solar Plumbing System

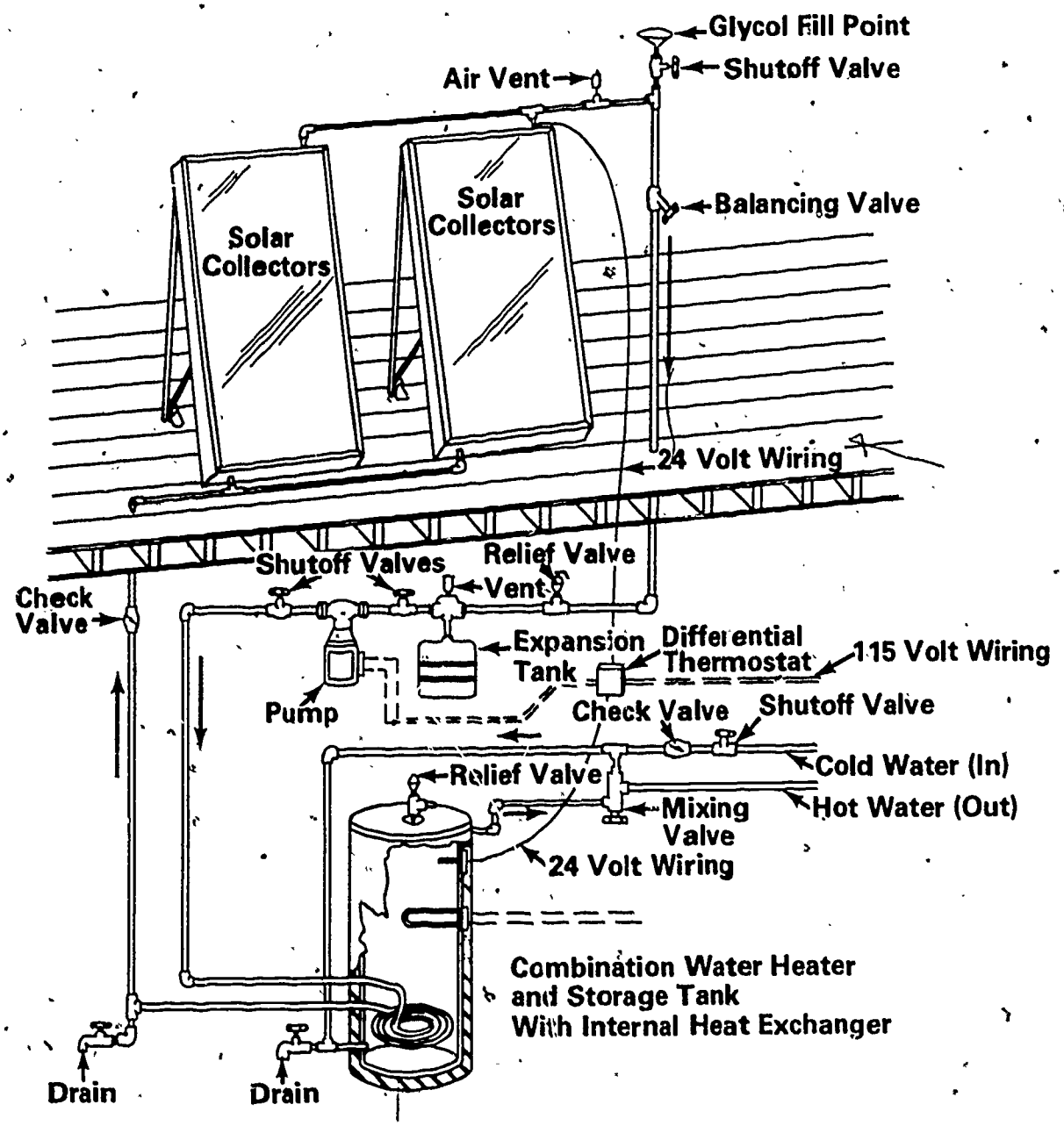

Domestic Hot Water System

Waste Riser Diagram

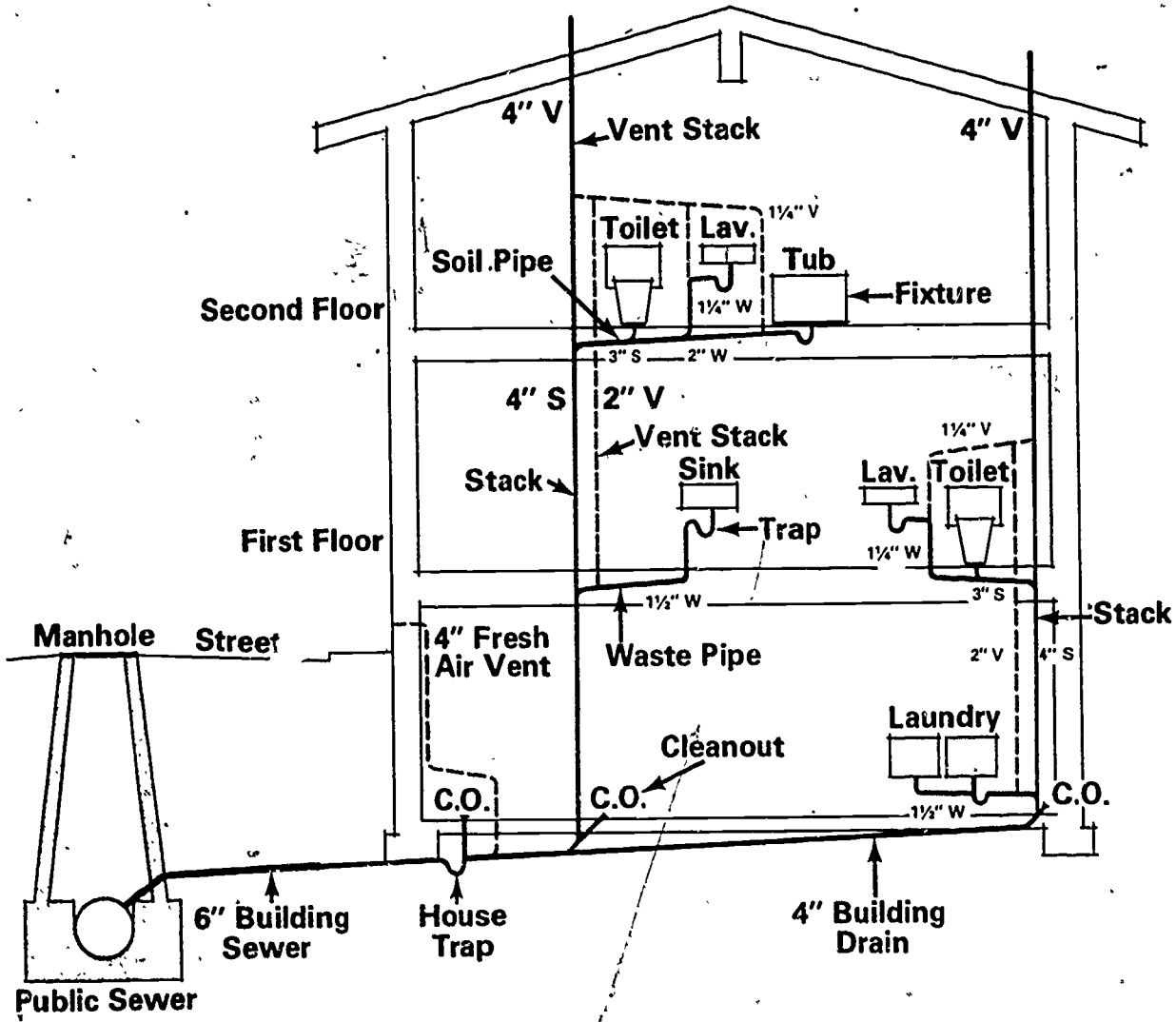

Waste Plumbing Plan

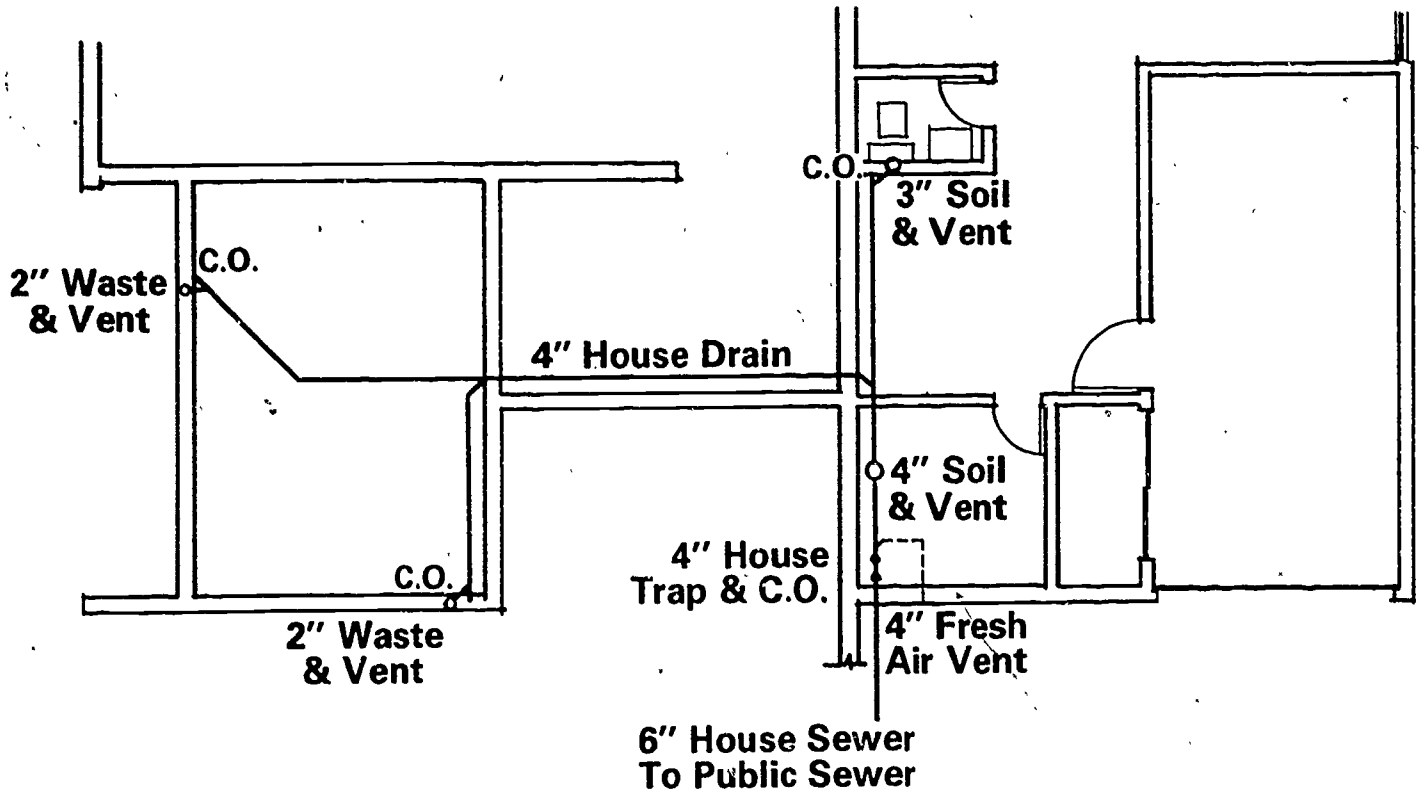

Plumbing Location Design

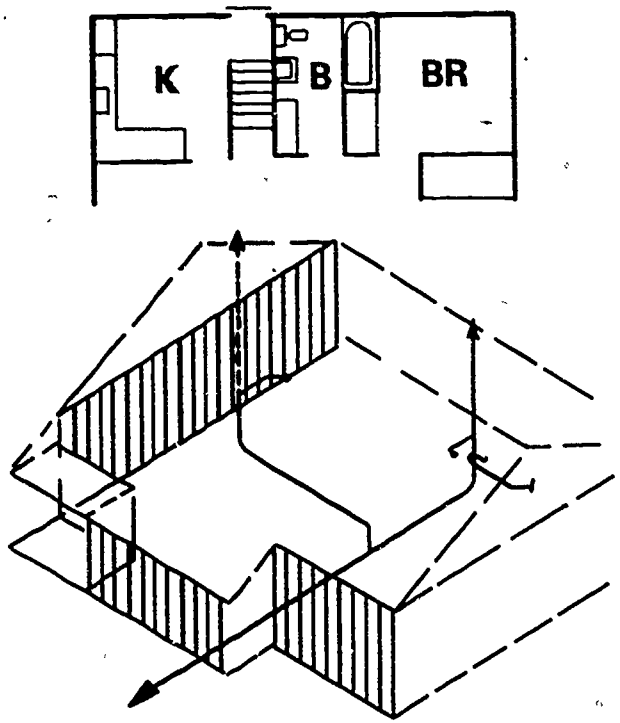

Split Location

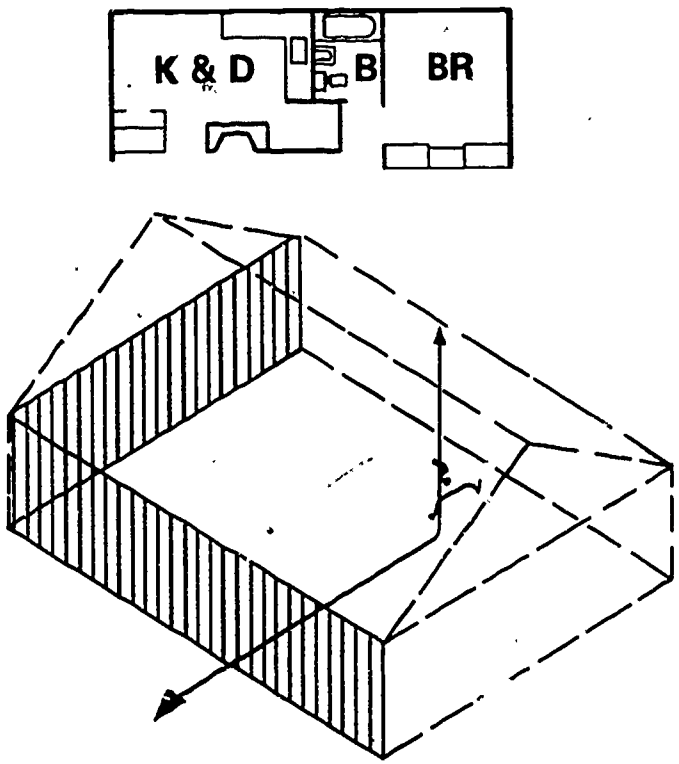

Back to Back Location

Septic System

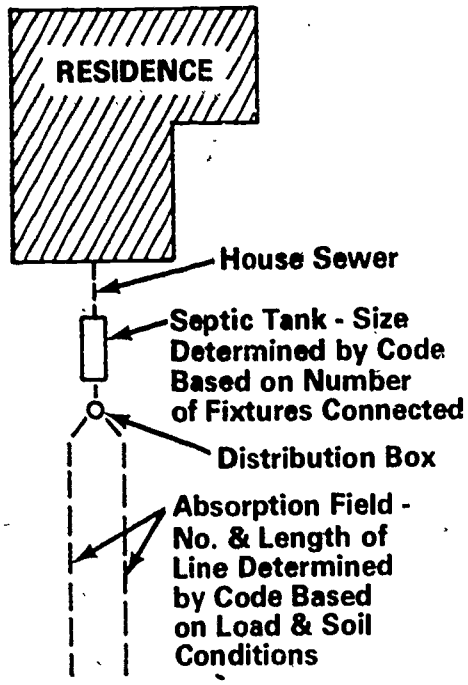

PLOT PLAN

MINIMUM SEPTIC TANK CAPACITY

Number of Bedrooms	Minimum Capacity (Gallons)
2 or less	750
3	900
4	1000
each additional Br. add.	250

HUD

MINIMUM DISTANCES (FEET)

FROM	TO			
	Septic Tank	Absorption Field	Seepage Pit	Absorption Bed
Well	50	100	100	100
Property line	10	5	10	10
Foundation	5	5	20	5
Water lines	10	10	10	10
Seepage pit	6	6		–
Dry well	6	20	20	20

HUD

Water Riser Diagram

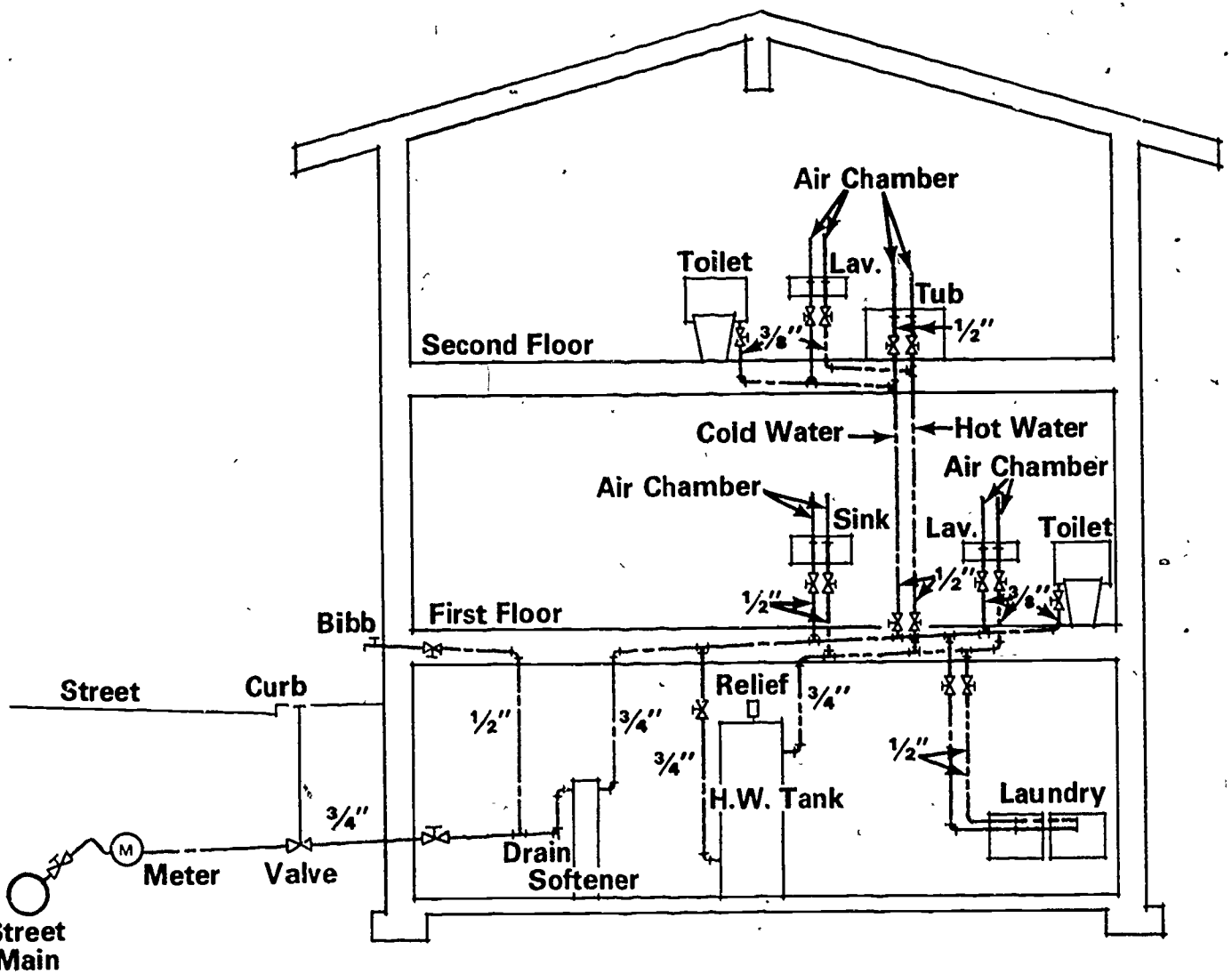

AD-641

TM

Water And Gas Plumbing Plan

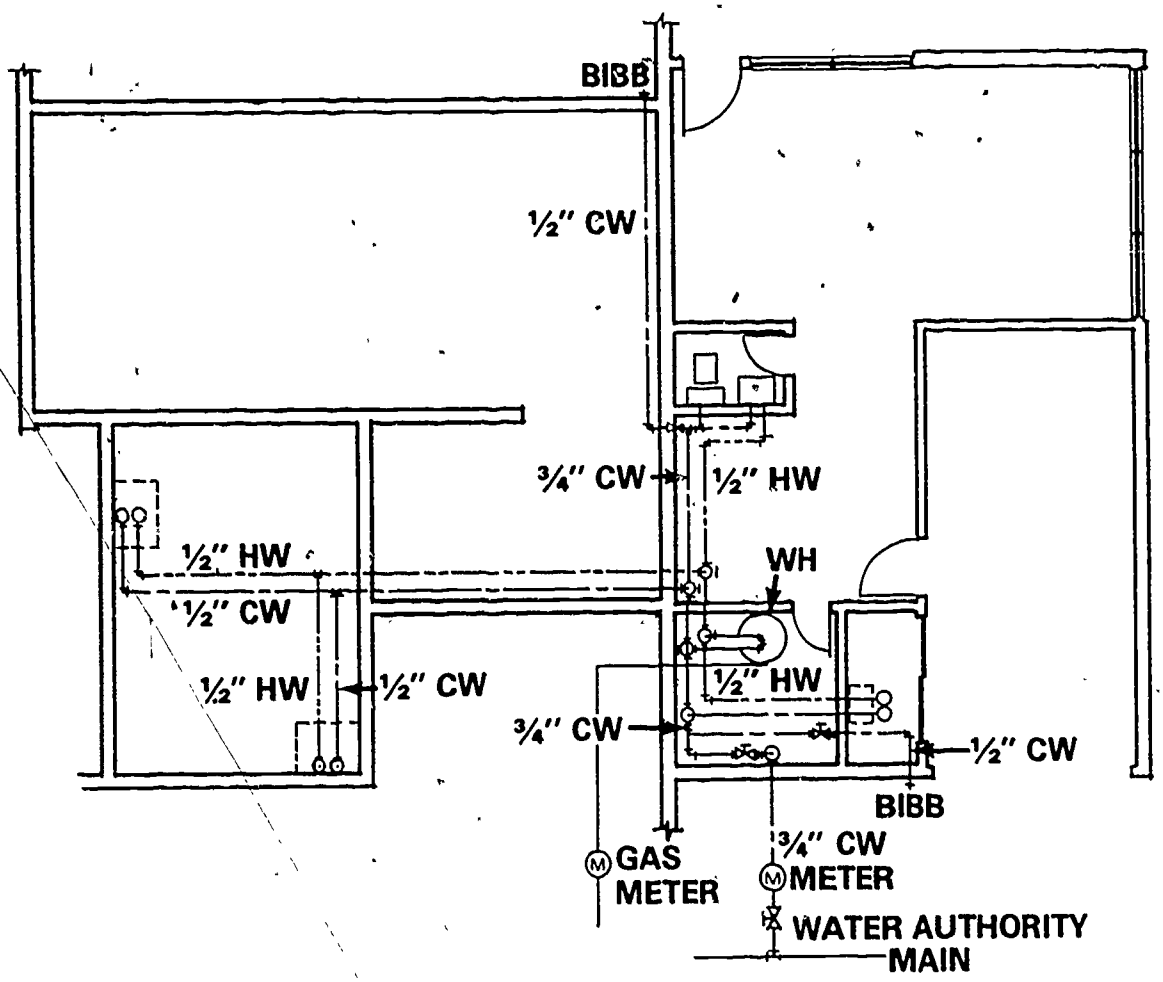

LEGEND

Cold Water Supply	Tee (Turned Up)
Hot Water Supply	Tee (Turned Down)
Gate Valve	Elbow (Turned Up)
Water Meter & Gas	Elbow (Turned Down)

Plumbing Symbols

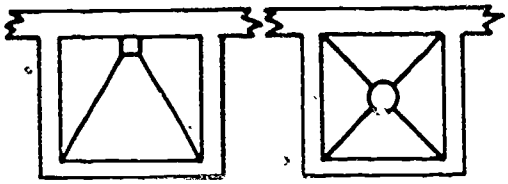

Showers

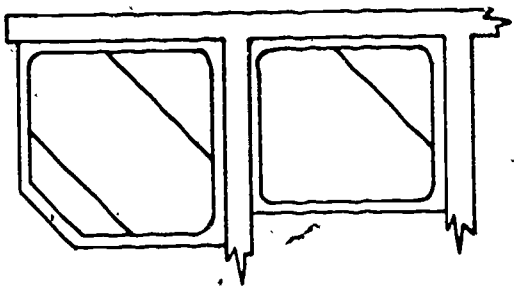

Square corner bathtub

Built-in square bathtub

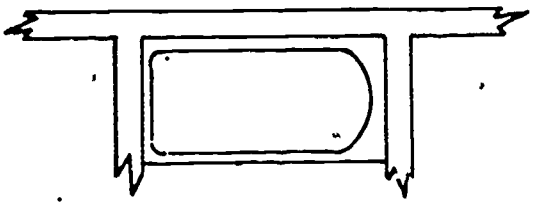

Built-in bathtub (Recessed)

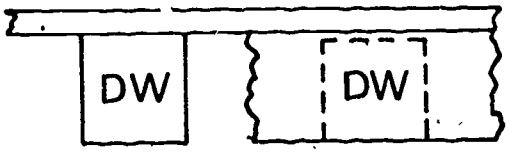

Freestanding and built-in dishwashers

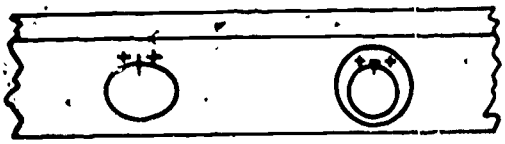

Built-in lavatories

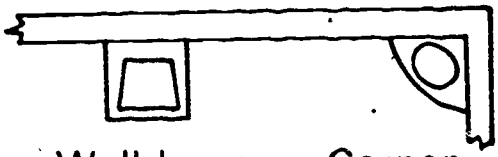

Wall hung lavatory

Corner lavatory

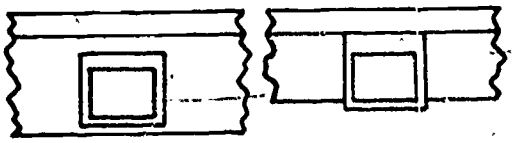

Built-in lavatories

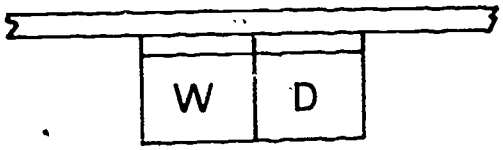

Washer and dryer

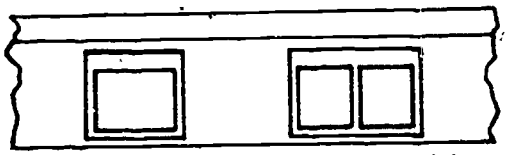

Single kit sink

Double kit sink

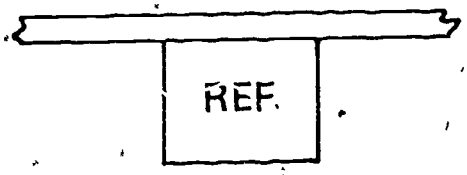

Refrigerator or freezer

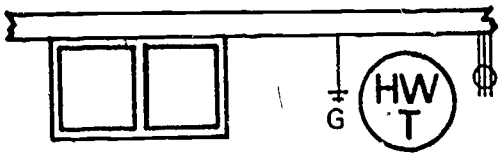

Laundry tubs

Water heater (Indicate fuel)

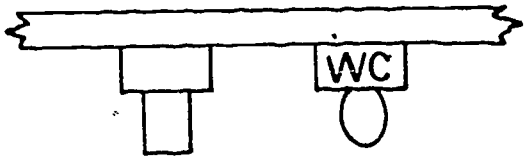

Toilet stools or water closets

Fixture Isometric Plumbing Layout

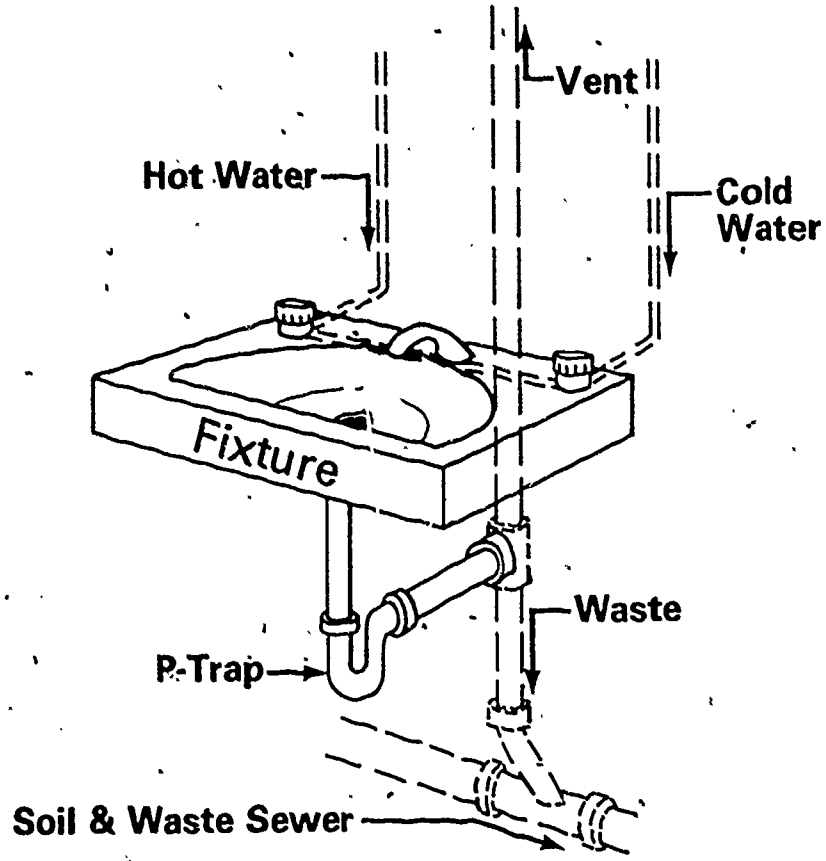

Isometric Drawing of Plumbing Fittings

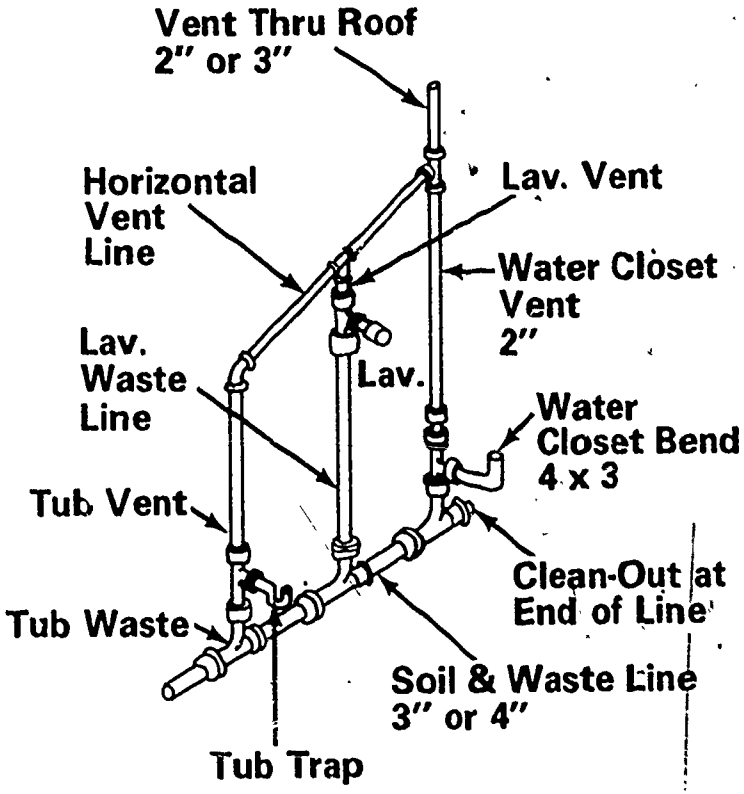

Bell & Spigot Fittings

Waste Plumbing Isometric Drawing

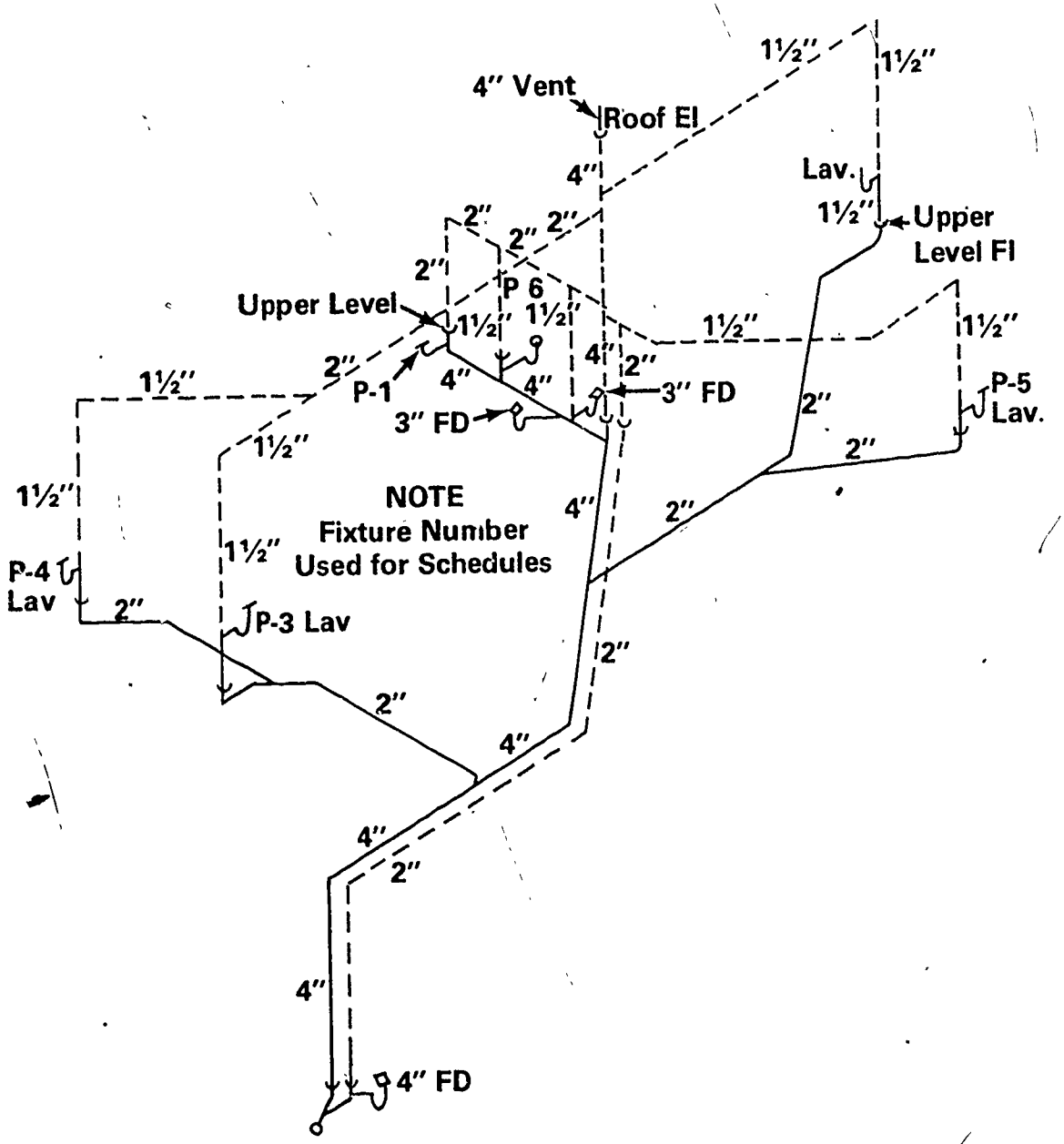

SOIL, WASTE & VENT ISOMETRIC

PLUMBING
UNIT X

ASSIGNMENT SHEET #1--CALCULATE THE SIZE OF A BUILDING SEWER LINE

Introduction: Before a plumbing working drawing can be started, sizes of all lines to all fixtures must be calculated. The procedure below is for calculating lines from a fixture unit drain to a public sewer.

(NOTE: Always refer to the National Plumbing Code or local code for exact line sizes.)

Example:

1. Use given 20 room motel with 4 laundry tubs, 5 urinals, and 5 sinks with slope of drain pipe to be 1/8 inch to the foot

2. Calculate the size of building fixture unit group drains (Table 1)

   a. Compute fixture units per motel room

1 water closet	X 3 units	3 units
1 lavatory	X 1 unit	1 unit
1 bathtub	X 2 units	2 units
		6 fixture units total flow

TABLE 1 EQUIVALENT FIXTURE UNITS Fixture	Number of Fixture Units		Minimum Trap Size
	Private Use	Public Use	
Bar Sink	1	2	1½
Bathtub (with or without shower over)	2	4	1½
Dental unit or cuspidor	-	1	1½
Drinking fountain (each head)	-	1	1¼
Hose bibb or sill cock (standard type)	3	5	
House trailer (each)	6	6	3
Laundry tub or clotheswasher (each pair of faucets)	2	4	1½
Lavatory	1	2	1½
Lavatory (dental)	1	1	1½
Lawn sprinklers (standard type, each head)	1	1	
Shower (each head)	2	4	1½
Sink (bar)	1	2	1½
Sink or dishwasher	2	4	1½
Sink (flushing rim, clinic)	-	10	3
Sink (washup, each set of faucets)	-	2	1½
Sink (washup, circular spray)	-	4	1½
Urinal (pedestal or similar type)	-	10	3
Urinal (stall)	-	5	2
Urinal (wall)	-	5	1½
Urinal (flush tank)	-	3	1½
Water closet (flush tank)	3	5	3
Water closet (flushometer valve)	6	10	3

ASSIGNMENT SHEET #1

b. Compute building group drains

(NOTE: Table 2 shows that a 2" pipe will carry 6 fixture units.)

TABLE 2 CAPACITIES OF BUILDING FIXTURE DRAIN & STACKS

Diameter of Pipe (Inches)	Maximum Number of Fixture Units	
	Any Building Fixture Drain	One Stack Three Stories in Height or Not Over Three Drain Intervals
1¼	1	2
1½	3	4
2	6	10
2½	12	20
3	20	30
4	160	240
5	360	540
6	620	960
8	1400	2200
10	2500	3800
12	3900	6000

From National Plumbing Code
American Society of Mechanical Engineers

3. Calculate the size of building sewer

a. Compute total fixture units

20 bathroom groups	X 6 units =	120 units
5 urinals	X 5 units =	25 units
4 laundry	X 2 units =	8 units
5 sinks	X 2 units =	10 units
		163 fixture units total flow

ASSIGNMENT SHEET #1

b. Compute building sewer size

(NOTE: Table 3 shows that a 4" pipe will carry 180 fixture units at 1/8 inch fall to the foot from building to public sewer.)

TABLE 3. CAPACITIES OF BUILDING DRAINS & SEWERS

Diameter Of Pipe (Inches)	Maximum Number of Fixture Units that may be Connected to Any Portion of the Building Drain or the Building Sewer		
	Fall per Foot		
	1/16-Inch	1/8-Inch	1/4-Inch
2			21
2½			24
3		20	27
4		180	216
5		390	480
6		700	840
8	1400	1600	1920
10	2500	2900	3500
12	3900	4600	5600

From National Plumbing Code.
American Society of Mechanical Engineers.

Directions: Using Tables 1, 2, and 3, calculate the size of building sewer line, building drain lines, and stack vent for the following problems.

Problems:

A. Residential house with 2 full baths, washer, dishwasher, and sink in utility room

B. One story motel with 40 rooms with baths back-to-back, 4 laundry tubs, 1 full size bath in manager's area, and 2 urinals in public use with slope of pipe to be 1/8 inch to the foot

PLUMBING
UNIT X

ASSIGNMENT SHEET #2--CONSTRUCT PLUMBING DRAWINGS
OF A BUILDING DRAIN SYSTEM

Directions: Construct a plan, riser, and isometric drawing of the figure shown below. Show building walls, window openings, and all piping. (Figure 1)

(NOTE: Use Plumbing Code to size lines.)

FIGURE 1

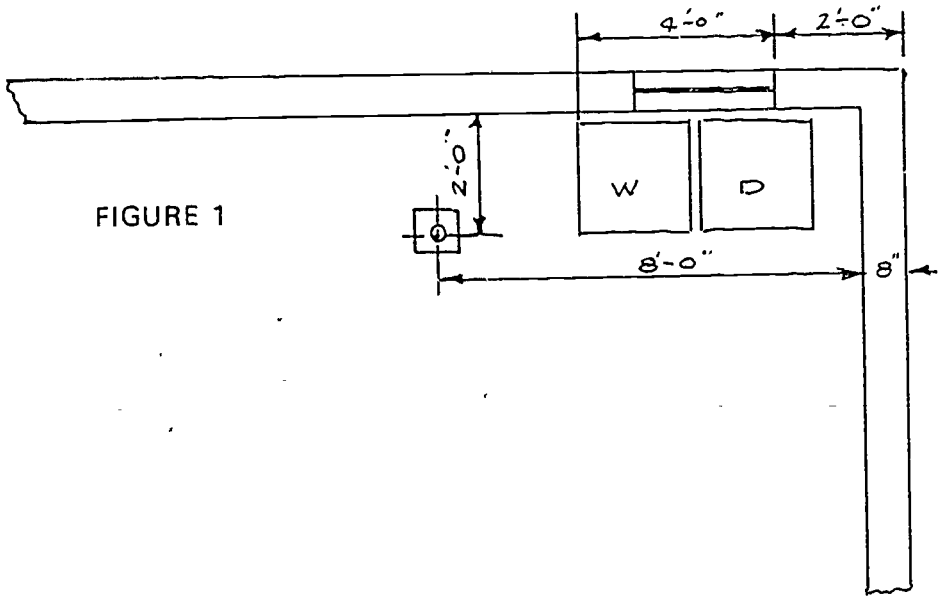

Problems:

A. Plan Drawing

ASSIGNMENT SHEET #2

B. Riser drawing

C. Isometric drawing

Directions: Construct the drainage layout on the following plan (Figure 2). Now construct an isometric. Size all piping according to local code or instructor's directions.

D.

FIGURE 2

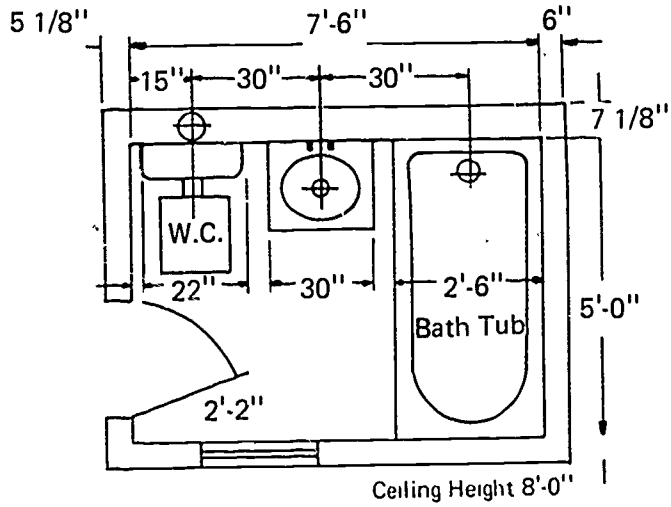

PLUMBING
UNIT X

ASSIGNMENT SHEET #3--CONSTRUCT PLUMBING DRAWINGS FOR A RESIDENTIAL BUILDING

Directions. Use given ground floor and upper floor plan of plumbing fixtures layout. Construct soil, waste sewer, and water lines on plan view. Construct isometric of plumbing lines on reverse side of sheet. Calculate and label all line sizes. Refer to local codes for sizing of lines.

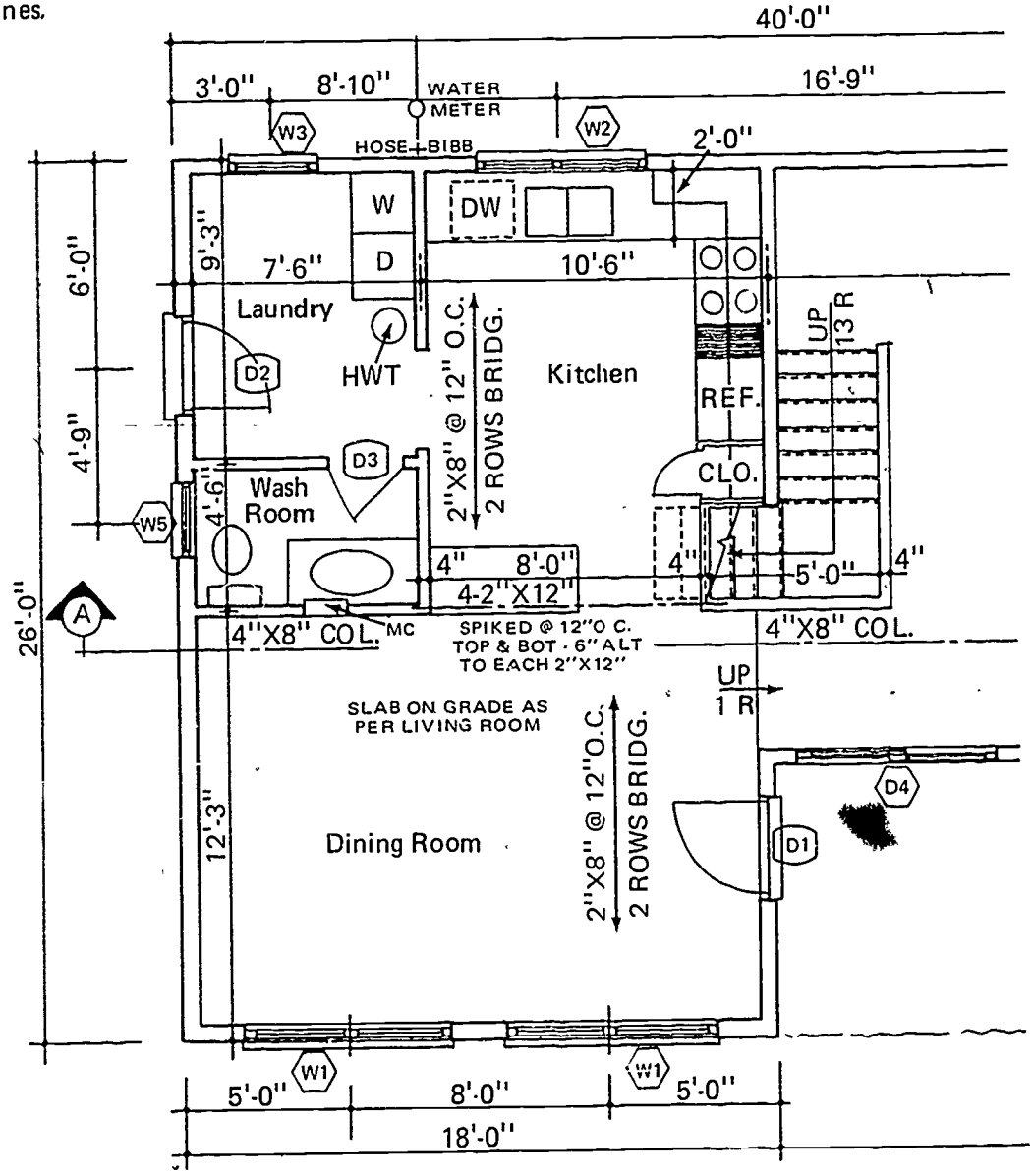

GROUND FLOOR PLAN

ASSIGNMENT SHEET #3

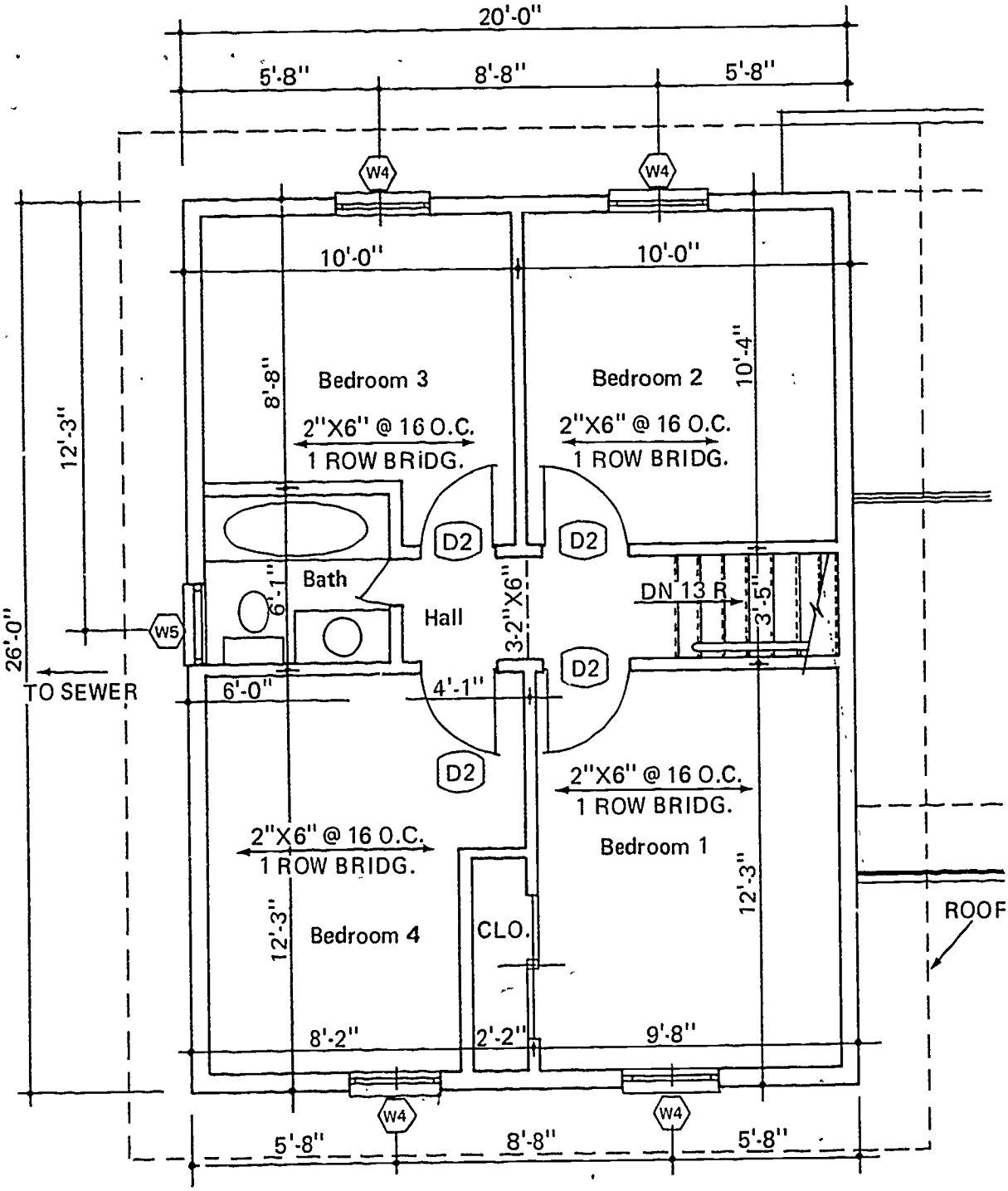

UPPER FLOOR PLAN

PLUMBING
UNIT X

ASSIGNMENT SHEET #4--DESIGN A SEPTIC SYSTEM

Introduction: In areas where sewers are not available, septic systems are required for the sanitary disposal of waste. The size of the tank and the length of drain lines are controlled by state and local health codes. The septic tank and drain fields are based on the number of fixtures, rate of use, and soil conditions. Use *HUD Minimum Property Standards* 615-9, Appendix D, or *BOCA Basic Plumbing Code*, 1981, Appendix D for designing a septic system.

Example: Design a septic system for a three-bedroom, single-family house located on two acres with soil conditions that are clay sandy and the percolation test absorption rate is 4 minutes/inch.

1. Using Table 1 determine minimum capacity of a septic tank for a three bedroom house

TABLE 1
LIQUID CAPACITY OF SEPTIC TANKS

Number of Bedrooms	Tank Liquid Capacities (Gallons)
2 or less	750
3 or 4	1,000
5 or 6	1,500
7, 8, or 9	2,000

Answer: 1,000 gallons

2. Using Table 2 determine how many square feet of absorption drain area are needed in clay sandy soil with a percolation test absorption rate of 4 minutes/inch for a three bedroom house

TABLE 2
SUBSURFACE DRAIN FIELD OR BED
(Minimum bottom area per bedroom)

Absorption Time (Minutes/Inch)	Minimum Bottom Area (Sq. Ft.)
2 or less	85
3	100
4	115
5	125
10	165
15	190
30	250
45	300
60	330

Over 60 minutes is not acceptable

Answer: 115 sq. ft. area x 3 bedrooms = 345 sq. ft.

ASSIGNMENT SHEET #4

3. Using Table 3 determine linear feet of drain lines needed

TABLE 3
TRENCH SIZE AND SPACING

Trench Width at Bottom (in.)	Minimum Trench Spacing (ft.)
12 to 18	6.0
18 to 24	6.5
24 to 30	7.0
30 to 36	7.5

Answer: 345 sq. ft. 18 inches of trench width = 230 linear feet of drain lines

4. Label on plot plan the correct septic tank capacity and total length of drain lines (Figure 1)

(NOTE: Drain lines are sometimes called laterals.)

FIGURE 1

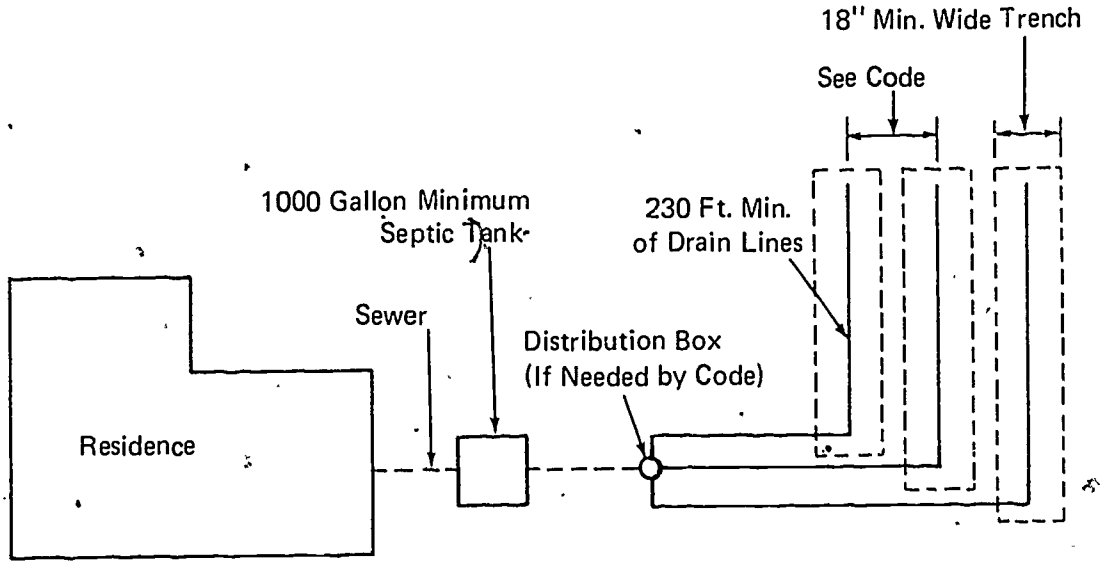

ASSIGNMENT SHEET #4

Problems:

A. Design a septic system for a four-bedroom, single-family house located on 2 1/2 acres with clay soil and an absorption rate of 30 minutes/inch

B. Design and label on a plot plan a septic system as assigned by instructor

(NOTE: This may be for your design project.)

PLUMBING
UNIT X

ANSWERS TO ASSIGNMENT SHEETS

Assignment Sheet #1

A. 17 fixture units; 3" pipe

B. 264 fixture units; 5" pipe

Assignment Sheet #2

A.

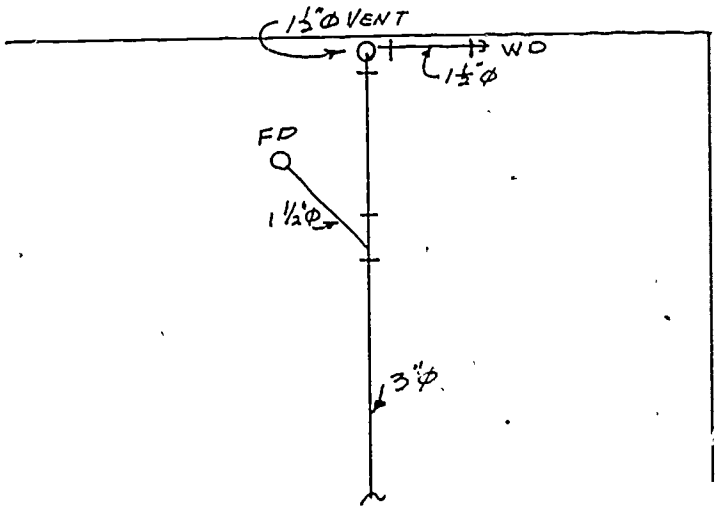

B.

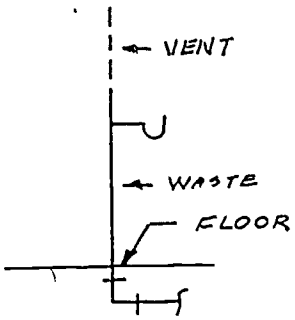

C.

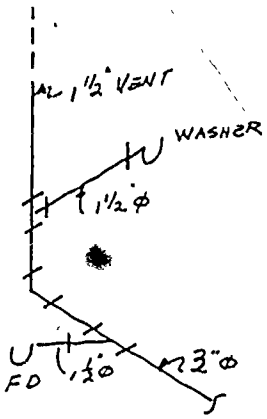

D.

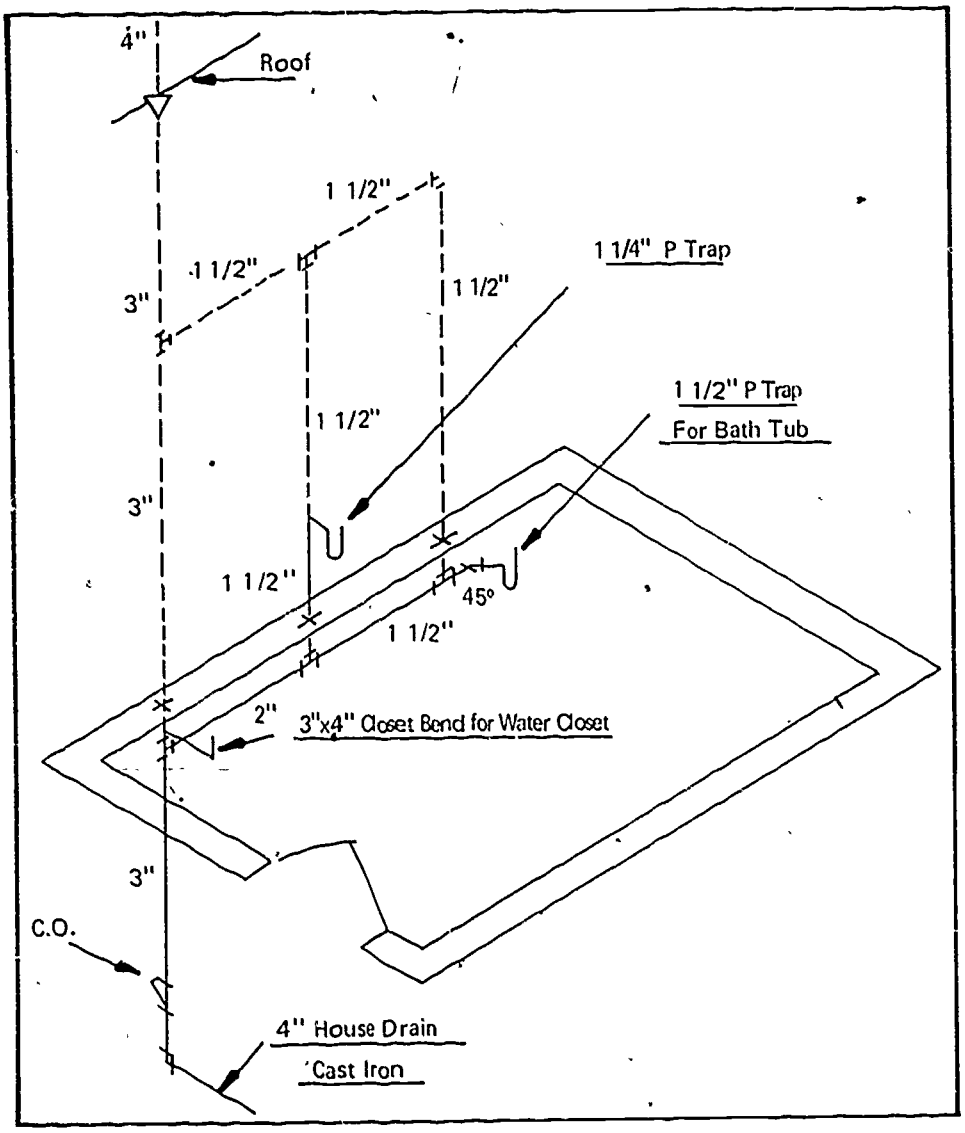

Assignment Sheet #3--Evaluated to the satisfaction of the instructor

Assignment Sheet #4

A. 1,000 gallon septic tank
18" wide trench
670 feet of drain lines

B. Evaluated to the satisfaction of the instructor

PLUMBING
UNIT X

NAME _____

TEST

1. Match the terms on the right with the correct definitions.

_____a. Plumbing design and installation requirements published by the International Association of Plumbing and Mechanical Officials

_____b. Plumbing design and installation requirements published by the Building Officials and Code Administrators

_____c. Receives the solid waste from water closets and discharges it to the building drain

_____d. Receives the waste from sinks, lavatories, bathtubs, washers, or other fixtures not receiving solid waste and discharges it in the soil pipe or building drain

_____e. Receives discharge from soil and waste pipes and carries it to the building sewer

_____f. Begins outside of the building and carries the waste to the sewer in the street, alley easement, or septic system

_____g. Any vertical pipe, such as soil pipe, waste pipe, or vent pipe

_____h. Vertical vent pipe used primarily to provide air circulation on any part of the building drainage system to eliminate emptying a trap

_____i. Provides a liquid seal to prevent passage of sewer gases in the building

_____j. Equipment that is attached to plumbing in a building

_____k. Measure of flow rate in a plumbing system

_____l. Used to retain solids in the sewage flowing through tank long enough for decomposition of settled solids by bacterial action

1. Hose bibb
2. Water system
3. Rough-in
4. Soil pipe
5. Stack
6. Fitting
7. Uniform Plumbing Code
8. Vent stack
9. Storm sewer
10. Building drain
11. Fixture
12. BOCA Basic Plumbing Code

_____m. A system of below ground perforated pipe surrounded by coarse aggregate through which septic tank liquid waste seeps into the soil

_____n. A pipe draining water from the roof to a storm sewer

_____o. A pipe or conduit used to drain surface water

_____p. Vertical pipe that connects from water main within a building to a fixture

_____q. An elbow fitting with a plug that will permit cleaning the sewer system

_____r. A standardized part that connects pipe and flow in a pipe in a plumbing system

_____s. A threaded faucet

_____t. Polyvinyl chloride pipe that is perforated and used for drain lines in a septic system

_____u. All piping and fittings from all fixtures that conduct waste water to a public sewer or septic system

_____v. All supply pipes that conduct water from the water main to lavatories, bathtubs, hot water heaters, or water closets

_____w. Provides air space to reduce water hammer

_____x. Plumbing work performed before concrete slab is poured and before wall covering materials are placed on wall

_____y. Test as specified by BOCA code to determine the rate of drop of a water surface in a test hole

13. Cleanout
14. Leader
15. Air chamber
16. Fixture unit
17. Waste pipe
18. Septic tank
19. Plastic pipe
20. Riser
21. Percolation test
22. Sewage disposal system
23. Trap
24. Drain field
25. Building sewer

2. Complete the following list of types of heating used in plumbi systems.

a. Fuel oil

b. Total electric

c. _____

d. _____

3. Name the major parts of a plumbing system.

a. _____

b. _____

4. Identify parts of a waste disposal system.

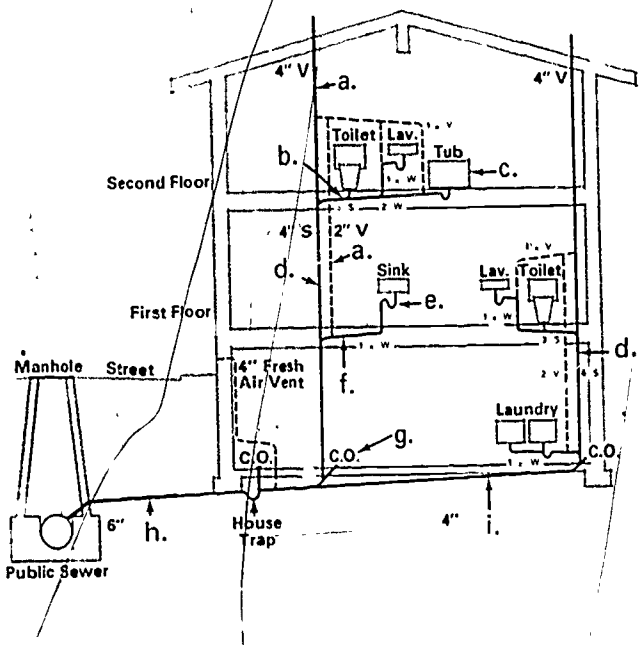

a. _____ b. _____

c. _____ d. _____

e. _____ f. _____

g. _____ h. _____

i. _____

5. Match the types of materials in a waste disposal system on the right with the correct uses.

_____a. Used for soil pipe, waste pipe, vents, building sewer, A/C drain, and drain field for a residential house

_____b. Used for building sewer, drain field, and public sewer lines

_____c. Used for all soil lines from within a residence or commercial building to the building drain lines

1. Copper
2. Galvanized steel
3. Plastic

_____d. Used for waste and vent pipes and fresh water

_____e. Used for vent pipes

_____f. Used for roof flashing, vent pipes, and industrial waste pipes

4. Cast iron
5. Lead
6. Vitrified clay tile

6. List the classifications of vents.

a. _____

b. _____

7. Select true statements concerning waste disposal systems by placing an "X" in the appropriate blanks.

_____a. Use larger than 2 X 4 studs to conceal cast iron soil stack pipes

_____b. All copper soil and waste piping above ground should be type X

_____c. Waste pipe is usually larger in diameter than soil pipe

_____d. It is economical to locate second floor bathroom above living room

_____e. It is economical to locate kitchen and bath fixtures back-to-back

_____f. Each fixture should be separately trapped

_____g. Individual vents should be less than 1" in diameter

_____h. Septic system must be sized according to local or state health code

_____i. The size of drain field does not need to be sized by local or state health department

_____j. A soil or waste stack should be two times smaller than the largest building drain connected to it

_____k. Fixtures that have traps do not need to be vented

8. Name the parts of a water system.

a. _____

b. _____

9. Select true statements concerning water systems by placing an "X" in the appropriate blanks.

_____a. Valves should be located in the system so various parts can be shut off without turning off complete system

_____b. All water heaters must have a pressure relief valve

_____c. The main water supply line to the building should be buried above the frost line

_____d. Isometric drawings of installation must always be made for all plumbing plans

_____ e. Drains must be provided for water softener and hot water relief lines

_____ f. All hot and cold water piping inside the building under concrete floors should be plastic

10. Complete the following chart of piping symbols and abbreviations.

	Abbreviations	Symbols
Soil, waste pipe (above grade)	_____	_____
Soil, waste pipe (below grade)	SW	_____
_____	V	- - - - - - -
Cold water	CW	_____
Soft water	SW	_____
Hot water	HW	—·—·—
Air conditioning drain	_____	—— D ——
Gas - low pressure	G	_____
Meter	(None)	M
_____	CO	CO FLOOR PIPE
Leader	L	O L
Hose bibb or freeze-proof	(None)	FP HF HB

11. Complete the following chart of pipe fitting and valve symbols.

Type of pipe fitting or valve	Screwed	Bell & Spigot	Isometric
_____			
Elbow - 45 deg.		_____	
Elbow - turn up			
Elbow - turned down		_____	_____
_____			
Gate valve			
Globe valve	_____		
Tee straight size		_____	_____
Tee - outlet up			
Tee - outlet down			_____

12. Match fixture plan symbols on the right with the correct names.

_____a. Hot water tank

_____b. Water closet

_____c. Bathtub

_____d. Shower stall

_____e. Urinal

_____f. Kitchen sink

_____g. Lavatory

_____h. Washer

_____i. Dryer

_____j. Dishwasher

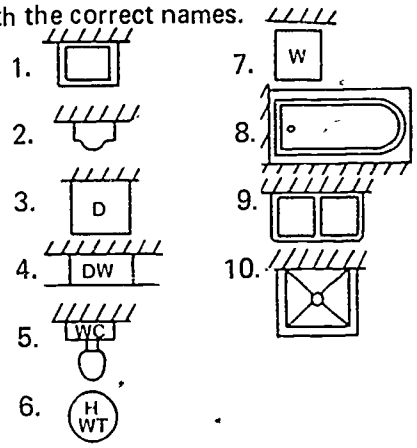

13. Select true statements concerning plan drawings by placing an "X" in the appropriate blanks.

_____a. Plan view shows drawing as viewed from side

_____b. Plan view always shows slope of pipe

_____c. Plan view can be used to determine:

1) Length of pipe

2) Location and types of fittings

3) Location of floor drains

4) Location of cleanouts

5) Direction of flow

6) Labor estimates

_____d. The plan drawing can serve as a record after the floor has been poured

14. Select true statements concerning riser drawings by placing an "X" in the appropriate blanks.

_____a. Riser drawing is a plan view

_____b. Riser drawing is a true picture

_____c. Riser drawing is valuable in determining code and inspection requirements

15. Select true statements concerning isometric drawings by placing an "X" in the appropriate blanks.

    _____a. Isometrics are used to show a three dimensional picture in one drawing

    _____b. Isometrics combine the plan and section detail into one drawing

    _____c. Pipes that are vertical on a plan or elevation, such as soil, water, and vent stacks, are shown at a 60° angle in the isometric drawing

    _____d. Pipes that are horizontal on a plan or elevation view remain horizontal in the isometric drawing

    _____e. Careful consideration to detail can indicate type of fitting and direction of flow

16. Demonstrate the ability to:

    a. Calculate the size of a building sewer line.

    b. Construct plumbing drawings of a building drain system.

    c. Construct plumbing drawings for a residential building.

    d. Design a septic system.

    (NOTE: If these activities have not been accomplished prior to the test, ask your instructor when they should be completed.)

PLUMBING
UNIT X

ANSWERS TO TEST

1.

a.	7	h.	8	o.	9	v.	2
b.	12	i.	23	p.	20	w.	15
c.	4	j.	11	q.	13	x.	3
d.	17	k.	16	r.	6	y.	21
e.	10	l.	18	s.	1		
f.	25	m.	24	t.	19		
g.	5	n.	14	u.	22		

2. c. Gas
   d. Solar

3. a. Waste disposal system
   b. Water system

4. a. Vent stack
   b. Soil pipe
   c. Fixture
   d. Stack
   e. Trap
   f. Waste pipe
   g. Cleanout
   h. Building sewer
   i. Building drain

5. a. 3
   b. 6
   c. 4
   d. 1
   e. 2
   f. 5

6. a. Soil and waste
   b. Individual fixture

7. a, e, f, h

8. a. Hot water
   b. Cold water

9. a, b, e

10.

	Abbreviations	Symbols
Soil, waste pipe (above grade)	SW	
Soil waste pipe (below grade)	SW	
Vent	V	
Cold water	CW	
Soft water	SW	SW
Hot water	HW	
Air conditioning drain	ACD	D
Gas - low pressure	G	G G
Meter	(None)	M
Cleanout	CO	CO FLOOR PIPE
Leader	L	L
Hose bibb or freeze-proof	(None)	FP HF HB

11.

Type of pipe fitting or valve	Screwed	Bell & Spigot	Isometric
Elbow - 90 deg.			
Elbow - 45 deg.			
Elbow - turned up			
Elbow - turned down			
Lateral			
Gate valve			
Globe valve			
Tee straight size			
Tee - outlet up			
Tee - outlet down			

12. a. 6
    b. 5
    c. 8
    d. 10
    e. 2
    f. 9
    g. 1
    h. 7
    i. 3
    j. 4

13. c, d

14. c

15. a, e

16. Evaluated to the satisfaction of the instructor

FORCED AIR HVAC SYSTEMS
UNIT XI

UNIT OBJECTIVE

After completion of this unit, the student should be able to sequence the steps in HVAC design and identify types of supply duct systems. The student should also be able to make HVAC calculations and draw an HVAC plan. This knowledge will be evidenced by correctly performing the procedures outlined in the assignment sheets and by scoring 85 percent on the unit test.

SPECIFIC OBJECTIVES

After completion of this unit, the student should be able to:

1. Match terms related to HVAC with the correct definitions.
2. Sequence the steps in HVAC design.
3. Identify types of supply duct systems.
4. Match climatic zones with their significance in HVAC design.
5. Match locations of registers and grilles with the correct advantages and disadvantages.
6. Identify symbols for elements of HVAC design.
7. Select true statements concerning rules of thumb for drawing HVAC plans.
8. List rules of thumb for sizing round pipe and rectangular ducts.
9. Solve problems concerning rules of thumb for determining duct size.
10. Differentiate between types of return-air duct systems.
11. Match structural designs with their typical return-air systems.
12. State the basic rule for return-air duct systems.
13. List factors in determining heat loss and heat gain.
14. Match equipment schedules, calculations, and notes with their functions on an HVAC plan.
15. Arrange in order the procedure for drawing an HVAC plan.

16. Demonstrate the ability to:

    a. Estimate heat loss for a temporary residence.

    b. Calculate shaded and unshaded glass areas for use in heat gain estimates.

    c. Estimate heat gain for a temporary residence.

    d. Evaluate the addition of insulation in relation to heat loss and heat gain.

    e. Estimate heat loss and heat gain for your design project.

    f. Draw an HVAC plan for your design project.

    g. Prepare equipment schedules.

FORCED AIR HVAC SYSTEMS
UNIT XI

SUGGESTED ACTIVITIES

I. Provide student with objective sheet.

II. Provide student with information and assignment sheets.

III. Make transparencies.

IV. Discuss unit and specific objectives.

V. Discuss information and assignment sheets.

VI. Utilize *Manual J* as a supplement to this unit.

VII. Invite a local HVAC contractor to speak to the class about heating and cooling load calculations, and ask the contractor to demonstrate how *Manual J* and the "Form J-1 Worksheet" are used to arrive at accurate room-by-room calculations.

(NOTE: If the contractor works with a procedure other than the one outlined in *Manual J*, the procedure should still include room-by-room calculations.)

VIII. Invite a representative from a local utility to demonstrate to the class how computerized heating and cooling load calculations are made.

IX. Have *Manual E*, *Manual G*, *Manual J*, and *Manual K* available in the classroom for reference when presenting objectives related to air distribution design.

X. Arrange for each member of the class to have a "Form J-1 Worksheet" for use in completing the assignment sheets.

(NOTE: These manuals and "Form J-1 Worksheet" will probably be available from a local or area HVAC contractor; if not, they may be ordered from The Air-Conditioning Contractors of America, 1228 17th St. N. W., Washington, D.C. 20036.)

XI. Invite a local architect to talk to the class about HVAC design and the particular problems it poses within the framework of working drawings.

XII. Invite an experienced duct design technician to demonstrate to the class how an air duct calculator can be used to determine friction loss, velocity in fpm, and other technical matters related to duct design and sizing.

XIII. Modify the answers to Assignment Sheets #1 through #4 to compensate for changes to *Manual J* as they occur.

XIV. Give test.

INSTRUCTIONAL MATERIALS

I. Included in this unit:

A. Objective sheet

B. Information sheet

C. Transparency masters

1. TM 1--Radial Duct System
2. TM 2--Trunk and Branch Systems
3. TM 3--Perimeter Loop Systems
4. TM 4--Climatic Zone Map for System Selection

D. Assignment sheets

1. Assignment Sheet #1--Estimate Heat Loss for a Temporary Residence
2. Assignment Sheet #2--Calculate Shaded and Unshaded Glass Areas for Use in Heat Gain Estimates
3. Assignment Sheet #3--Estimate Heat Gain for a Temporary Residence
4. Assignment Sheet #4--Evaluate the Addition of Insulation in Relation to Heat Loss and Heat Gain
5. Assignment Sheet #5--Estimate Heat Loss and Heat Gain for Your Design Project
6. Assignment Sheet #6--Draw an HVAC Plan for Your Design Project
7. Assignment Sheet #7--Prepare Equipment Schedules

E. Answers to assignment sheets

F. Test

G. Answers to test

II. References:

A. *Manual E, Room Air Distribution Considerations.* Washington, D.C. 20036: The Air-Conditioning Contractors of America, 1965.

B. *Manual G, Selection of Distribution System.* Washington, D.C. 20036: The Air-Conditioning Contractors of America, 1963.

C. *Manual J, Load Calculation for Residential Winter and Summer Air Conditioning.* Washington, D.C. 20036: The Air-Conditioning Contractors of America, 1980.

D. *Manual K, Equipment Selection and System Design Procedures.* Washington, D.C. 20036: The Air-Conditioning Contractors of America, 1975.

E. Kicklighter, Clois E. *Architecture Residential Drawing and Design.* South Holland, IL 60473: The Goodheart-Willcox Co., Inc., 1973.

FORCED AIR HVAC SYSTEMS
UNIT XI

INFORMATION SHEET

I. Terms and definitions

A. HVAC--Heating, ventilating, and air conditioning

B. Btu (British thermal unit)--The amount of heat required to raise the temperature of one pound of water one/degree Fahrenheit

C. Btuh (British thermal units per hour)--The unit used to express hourly heat flow

D. Heat transfer--The movement of heat from one substance or region to another

E. HTM (Heat Transfer Multiplier)--An index of heat transfer through one square foot of a structural component at specific design conditions

F. R-value--The rating given to a material's ability to resist heat transfer

G. U-value--One divided by the total R-values of a component

H. Psychometrics--The science of measuring and changing the properties of air

(NOTE: For more detailed information on psychometrics, refer to MAVCC's *Air Conditioning and Refrigeration, Book Three.*)

I. Ventilation--Controlled air brought into a structure

J. Infiltration--Uncontrolled air that leaks into a structure

K. Humidity--Water vapor or moisture added to the atmosphere or any material

L. Heat loss--The amount of heat lost to the outdoors from all building surfaces, walls, floors, doors, and windows exposed to outdoors or adjoining spaces with different temperatures

M. Heat gain--The amount of heat gained from the outdoors from all building surfaces, walls, floors, doors, and windows exposed to outdoors or adjoining spaces with different temperatures

N. Hydronics--A system of heating or cooling by a circulating fluid as water or vapor

O. Radiant heating--Heating by radiation from electrical conductors or hot air or hot water pipes

P. Cfm--Cubic feet per minute

Q. Fpm--Feet per minute

INFORMATION SHEET

R. Heat pump--Device which extracts heat from the air

(NOTE: There is always some heat in the air regardless of temperature. In the winter heat is taken from the outside and pumped into the building; in summer the pump is reversed and the heat is pumped outside.)

S. Compressor--Machine that compresses gases

T. Conduction--The direct passage of energy, light, or heat from one object to another through contact

U. Radiation--The process of emitting radiant energy in the form of waves or particles

(NOTE: An object is warmed when the rays strike its surface.)

V. Static pressure--The measure of the resistance of ducts, grilles, filters, and other surfaces to the flow of air

(NOTE: This is the pressure within duct work, which is positive if the duct is a supply duct and negative if the duct is a return duct.)

W. Plenum--A box-like fitting into which an air handler discharges air or from which the air handler receives return air in a duct system

X. Duct--Tube or channel through which air is conveyed or moved

(NOTE: These should be insulated in unconditioned spaces according to local codes.)

Y. Boot--A duct fitting which adapts the duct to a wall stack or to a register or grille

Z. Take-off--The point of departure from a duct to which a duct fitting is attached to accomplish branching of ductwork

AA. Equivalent length--Resistance to air flow created by the structural design of a fitting, indicated by the length of straight duct which would offer the same resistance

BB. Effective length--The sum of the measured length of straight duct plus the equivalent lengths of fittings in the duct

CC. Actual measured length--The physical measurement of a duct

DD. Damper--Device used to control the volume of air flow passing through or out of a duct or register

EE. Vane--A fixed or adjustable device used to direct air flow

FF. Grille--A louvered opening usually found in a return air opening

INFORMATION SHEET

GG. Register-A grille that has a regulating damper device for controlling amount of air flow and vanes to control air direction

HH. Diffuser-A register which delivers fan shaped patterns of air into a room

II. Equal friction method--A method of duct design used to meter air flow so that air is distributed proportionately to all conditioned spaces

(NOTE: This commonly used basis for duct design means areas requiring more air, or distant areas requiring the same air volume, require larger ducts to overcome or "equalize" the increased friction.)

JJ. System pressure--The sum of the negative and positive static pressures being exerted by a blower

KK. Convection currents--Air currents set in motion by cooling or warming of air brought in contact with hot or cold surfaces such as walls or windows

LL. Stratification of air--Condition in which there is little (15 fpm) or no air movement in room; air lies in temperature layers

(NOTE: In the summer this is identified as the region near the ceiling where a layer of smoke will hang for some time; in the winter it is identified as a cold layer of air near the floor.)

MM. Temperature gradient--Temperature change from one level or stratum to the next as in the change from floor to ceiling

NN. Cascade (waterfall) effect--The transfer of large masses of air due to convection currents in a structure often caused by warm air rising and cooler air falling through building accesses such as stairs

OO. Wall stack--A thin, rectangular duct which runs vertically inside a wall

PP. Ceiling or wall effect--A peculiar ability of moving air to cling to a ceiling or a wall

QQ. Terminal velocity--An arbitrary maximum velocity of an air stream which spreads or drops into a living area, usually considered comfortable at 35-50 fpm

RR. Throw--The distance a high sidewall supply outlet delivers air before slowing to terminal velocity

SS. Drop--The distance air falls vertically below a high sidewall supply outlet before slowing to terminal velocity

TT. Spread--The fan-like width of an air stream from a diffusing type supply outlet at the point of terminal velocity

INFORMATION SHEET

UU. Primary air--A mixture of supply air from an outlet and room air at velocities above 150 fpm

VV. Entrained air--Room air which is dragged into the primary air and raised to higher velocities and temperatures inside the primary air envelope

WW. Floor warming--Floor heating by burying ducts in concrete slab floors or by running supply ducts under floors

XX. Pressure drop--The phenomenon of static pressure diminishing from maximum at the blower to zero after passing through an outlet regardless of duct length

YY. IWG--Inches water gauge measured with a monometer

(NOTE: Not all terms in the preceding list are used in this unit, but many of the terms will be used in general references to HVAC activities, and you should be familiar with them.)

II. Steps in HVAC design

A. Calculate heating and cooling loads for the structure; express in total Btuh's for the convenience of sizing heating and cooling equipment

(NOTE: There are several acceptable procedures for calculating heating and cooling loads, but the procedures outlined in *Manual J* and the "Form J-1 Worksheet" will be used in this unit. They are published by the Air-Conditioning Contractors of America.)

B. Size the heating and cooling equipment to afford the customer maximum comfort at minimum expense

(NOTE: *Manual K* published by the Air-Conditioning Contractors of America is recommended for drafters who wish to learn more about this element of HVAC design.)

C. Design an air distribution system so that duct work and grilles can supply designed comfort levels related to seasonal demands in specific geographic locations

(NOTE: Air distribution designs are usually executed by an HVAC contractor, but drafters often have to draw these plans so that they can be incorporated along with plumbing and electrical plans into a set of working drawings.)

III. Types of supply duct systems

A. Radial or spider (Transparency 1)

B. Trunk and branch (Transparency 2)

1. Reducing plenum

2. Extended plenum

INFORMATION SHEET

C. Perimeter loop (Transparency 3)

1. Trunk duct

2. Radial duct

IV. Climatic zones and their significance in HVAC design (Transparency 4)

A. Zone A--Cold weather is more severe and prolonged, the summers are relatively mild, and HVAC design must pay particular attention to heating

B. Zone A-1--Has the same characteristics as Zone A, but the summer temperatures are, on the average, higher than in Zone A, and HVAC design must provide for both heating and cooling

C. Zone B--Has less severe winters than Zone A, but hotter days for extended periods, and HVAC design must provide a well balanced heating and cooling system

D. Zone C--Has mild winters and hot summers, and HVAC design must pay particular attention to cooling

V. Advantages and disadvantages for locations of registers and grilles

A. Perimeter system

1. Advantages

a. Delivers conditioned air at point of greatest heat loss and heat gain, which is the outside of the structure

b. Allows fewer air returns which are generally located in inner areas of structure

c. Delivers the highest level of comfort of any system

2. Disadvantages

a. More costly than many other systems

b. May be subject to water problems if ducts are buried under the slab

B. High inside wall system

1. Advantages

a. Supply outlets are located central to main trunk duct, so shorter ducts can be used

b. Pressure is less so smaller blower may be used

c. Doesn't interfere with furniture placement

INFORMATION SHEET

d. Permits longer periods of blower operation

e. Well suited for cooling in areas where heating is of less importance

f. Installation is less costly

2. Disadvantages

a. Heating is more difficult because of stratification

b. Areas of greatest heat loss and gain such as windows are difficult to condition unless special attention is paid to selection of registers

C. Low inside wall system

1. Advantages

a. Supply outlets are located close to the blower

b. Installation is less costly

2. Disadvantages

a. Proper air distribution is difficult

b. High air velocities must be avoided

c. Furniture placement is difficult

d. Difficult to use as a cooling system

e. Diffuser vanes must be adjusted seasonally

D. Ceiling

1. Advantages

a. Doesn't interfere with furniture placement

b. Can be located in center of room or near outside wall

c. Well suited for summer cooling

d. Return air can be located on either inside or outside wall, near the floor

2. Disadvantages

a. Proper selection of supply registers is critical

b. Doesn't heat floors directly

c. Can cause room air stratification and large air temperature gradients

INFORMATION SHEET

VI. Symbols for elements of HVAC design

A. Warm air supply-- W.A.

B. Cold air return-- C.A.

C. Second floor supply--

D. Second floor return--

E. Duct size and air flow-- 12" x 18"

F. Change in duct size--

G. Hydronic radiant panel coil--

H. Hot water heating return--

I. Hot water heating supply--

J. Thermostat-- T

K. Humidistat-- H

L. Radiator-- RAD

M. Convector-- CONV.

N. Register-- R

O. Round ceiling diffuser--

P. Furnace-- FURN

INFORMATION SHEET

Q. Square ceiling diffuser--
(NOTE: Arrows indicate flow.)

R. Humidification line-- H

S. Medium pressure steam--

(NOTE: For other symbols, refer to appropriate manuals.)

VII. Rules of thumb for drawing HVAC plans

A. Proper symbols must be used

B. Ducts should be drawn as close to scale as possible

(NOTE: 1/4" = 1'-0" is the preferred scale.)

C. Pipes are not drawn to scale; they are indicated by a single line

D. Sizes should be shown on the plan

E. There should be at least one register or baseboard unit in each large area to be heated or cooled

(NOTE: This includes halls and stairways.)

F. Large areas should be counted as two or more rooms

G. Any area with more than 15' of exterior wall should have two or more outlets

H. Each heating zone needs an individual thermostat

I. Thermostats should be on an inside partition where the temperature will be representative of the area as a whole

(NOTE: Thermostats exposed to direct sunlight or in the close proximity of an inside heat source will not give a representative temperature or adequate control.)

J. Special considerations should be made for the proposed number of occupants and in-dwelling activities

(NOTE: Often used family rooms or recreation rooms may demand more outlets for large families, and the same is true in situations where occupants may entertain frequently.)

VIII. Rules of thumb for sizing round pipe and rectangular ducts

A. Pipe should be either 6" or 8" in diameter

B. When the system is used for cooling only or for both heating and cooling, 8" diameter pipe should be used

INFORMATION SHEET

C. All rectangular ducts are 8" deep and vary in width from 10" to 28"

D. The sectional area of a supply duct should equal the total area of all the round register pipes

IX. Rules of thumb for determining duct size

A. To obtain the size of the plenum duct when 6" pipes are used, multiply the number of pipes by 2 and add 2 to that number

Example: If a duct is to serve eight 6" pipes, multiply 8 x 2 = 16 + 2 = 18; since many rectangular ducts are 8" deep, the size of the plenum duct should be 8" x 18".

(NOTE: The standardized 8" depth of rectangular ducts, and the standard width availabilities of 10" to 38" is especially convenient for planning extended plenum systems which are preferred systems for many applications.)

B. To obtain the size of the plenum duct when 8" pipes are used, multiply the number of pipes by 3 and add 2

Example: If a duct is to serve eight 8" pipes, multiply 8 x 3 = 24 + 2 = 26, and the size of the plenum duct should be 8" x 26"

(NOTE: These rules of thumb are handy for uncomplicated situations, but the procedures outlined in *Manual K* are recommended for determining duct size.)

X. Types of return-air duct systems and their characteristics

A. Simple return-air duct system--A system that provides from one to three centrally located return-air grilles for the entire structure

B. Multiple return-air duct system--A system that provides a return-air grille for each conditioned room, except that return air is not normally taken directly from kitchens or bathrooms

XI. Structural designs and their typical return-air systems

A. Slab floor structures--Frequently have simple return-air duct systems

(NOTE: This is a general rule and there are, naturally, exceptions.)

B. Crawl space structures--May have simple or multiple return-air duct systems

(NOTE: A minimum of one return-air duct should be provided for the crawl space when it is heated and the furnace is not installed in the crawl space.)

INFORMATION SHEET

C. Basement structures--Normally require multiple return-air duct systems

(NOTE: Finished basement rooms to be occupied or used for recreation should have a return-air system installed, but return air taken from a basement should never interfere with the venting of the furnace or any fuel burning appliance.)

XII. The basic rule for return-air duct systems--Must be designed for a specific air volume equal to, or greater than, the design air volume of the supply duct system

XIII. Factors in determining heat loss and heat gain

A. Size of structure and the insulating qualities of its components

(NOTE: Floor plans and specifications usually provide this information.)

B. Outside design temperature for heat loss

C. Daily temperature range for heat gain

D. Inside design temperature

E. Design temperature difference for heat loss

F. HTM heating or HTM cooling

XIV. Schedules, calculations, and notes and their functions on an HVAC plan

A. Equipment schedules--Orderly arrangement of components of the HVAC system provides a convenient means of specifying equipment and eliminates excessive information on the HVAC plan itself

Example:

SPECIFICATIONS FOR HVAC EQUIPMENT

Model Number	C016-02-A1
Heating Capacity	56,300 BTU/H
Cooling Capacity	23,000 BTU/H
Heating Minimum	720 CFM
Cooling Rate	800 CFM
Heating Elements	240 V, 16,500 W, 66.5 A
Blower Motor	1/4 HP, 115 V, 4.6 A
Total Load	72.3 Amperes
Electric Air Cleaner	18 1/2" x 21 5/8" - 1,200 CFM
Humdifier Capacity	3.4 lbs/H at 75°
Compressor Type	Hermetic

INFORMATION SHEET

B. Calculations--Heat loss and heat gain calculations by room are important because they are the basis for equipment selection

Example:

SUMMARY OF HEAT LOSS CALCULATIONS

Feature	Area or Volume	"U" Factor	Design Temp. Dif.	BTU/H
First Floor				
Net Wall Area	1,141 sq. ft.	.086	75°	7,360
Glass	290 sq. ft.	.530	75°	11,528
Doors (Wood)	41 sq. ft.	.520	75°	1,600
Ceiling	1,472 sq. ft.	.066	75°	7,286
Floor	Heated Basmt.	---	---	---
Infiltration	11,776 cu. ft.	.018	75°	15,898
Basement				
Net Wall Area	1,454 sq. ft.	.060	50°	4,367
Glass	18 sq. ft.	.530	75°	716
Floor	1,472 sq. ft.	.100	30°	4,410

TOTAL HEAT LOSS = 53,165 BTU/H

C. Notes--Should provide sub-contractors or the builder with helpful or desirable information; they should be brief and to the point

Example: Heat pump design includes pre-heat for hot water

XV. Procedure for drawing an HVAC plan

A. Trace the basic HVAC plan from the floor plan; show exterior and interior walls, windows, doors, and all features related to the system

B. Locate heating and cooling equipment on the floor plan and indicate complementary systems for humidification, dehumidification, or air cleaning

C. Insert proper symbols for location of registers, coils, or baseboard units

(NOTE: Symbols will vary depending on equipment.)

D. Use a hidden line to draw air return ducts and cold air return grilles

(NOTE: This item is required only with forced air systems and with cooling equipment.)

E. Draw the supply ducts and connect them to registers, diffusers, etc.

F. Indicate location of thermostats and other controls

INFORMATION SHEET

G. Indicate the size of ducts or pipes and all attachments

H. Include required schedules

I. Complete title block, dimensions, and notes as necessary

Radial Duct System

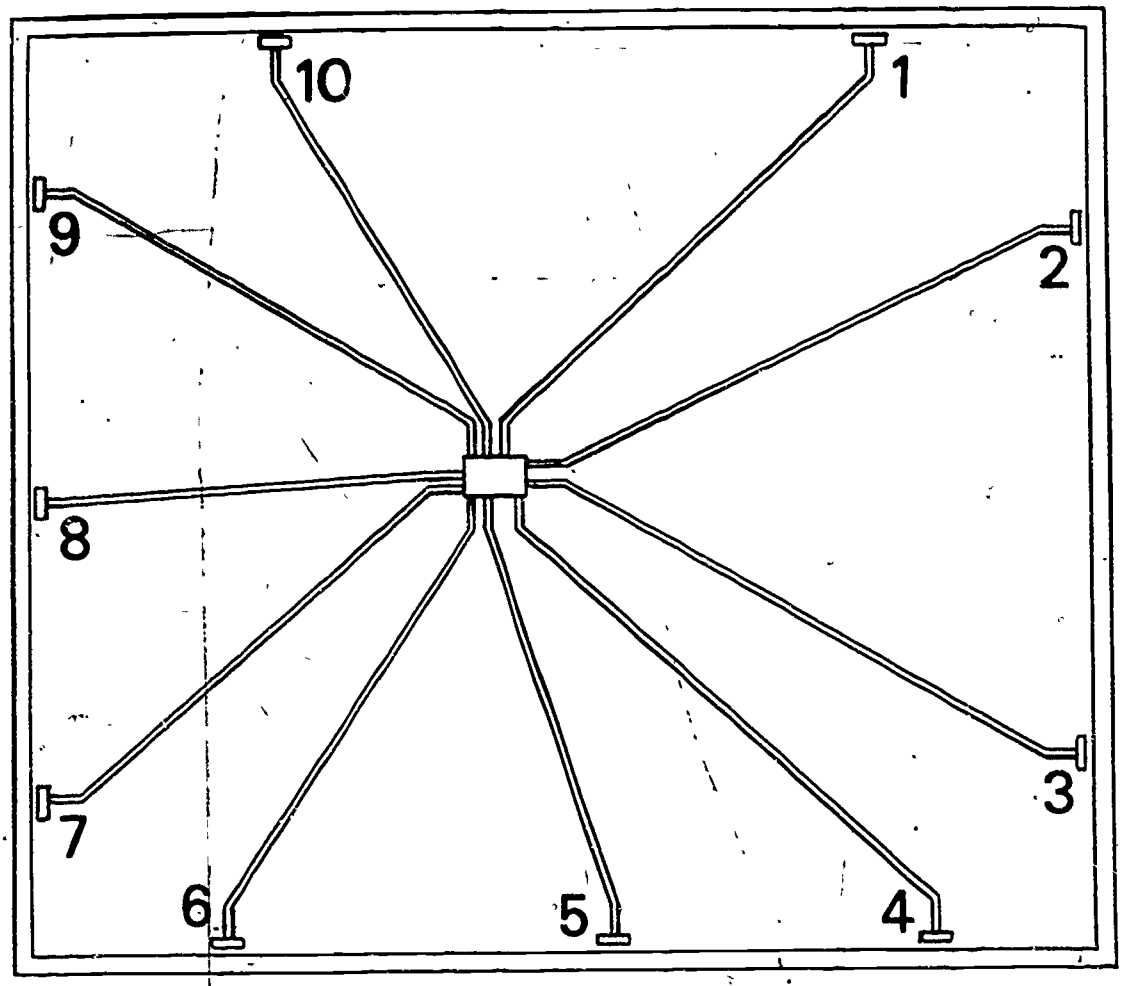

Trunk and Branch Systems

Reducing Plenum Duct System

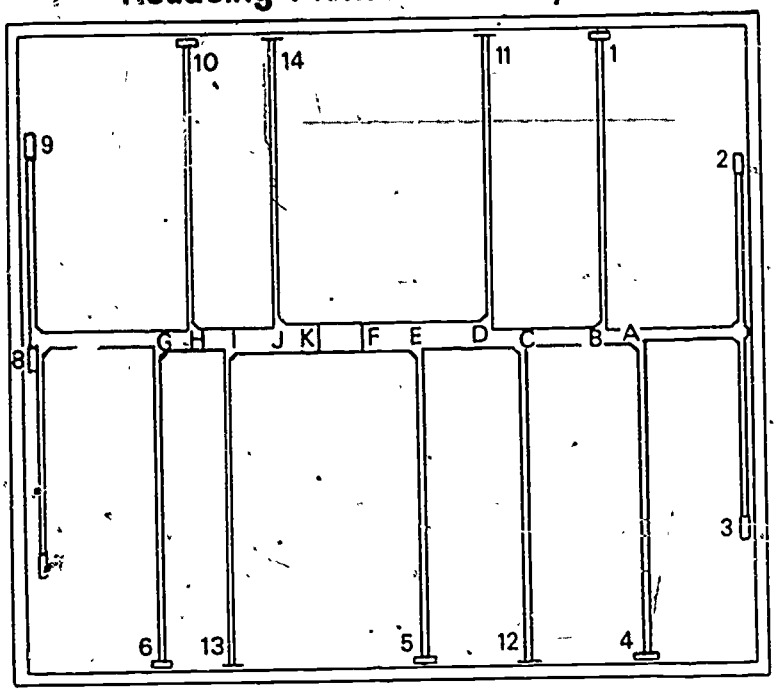

Extended Plenum Duct System

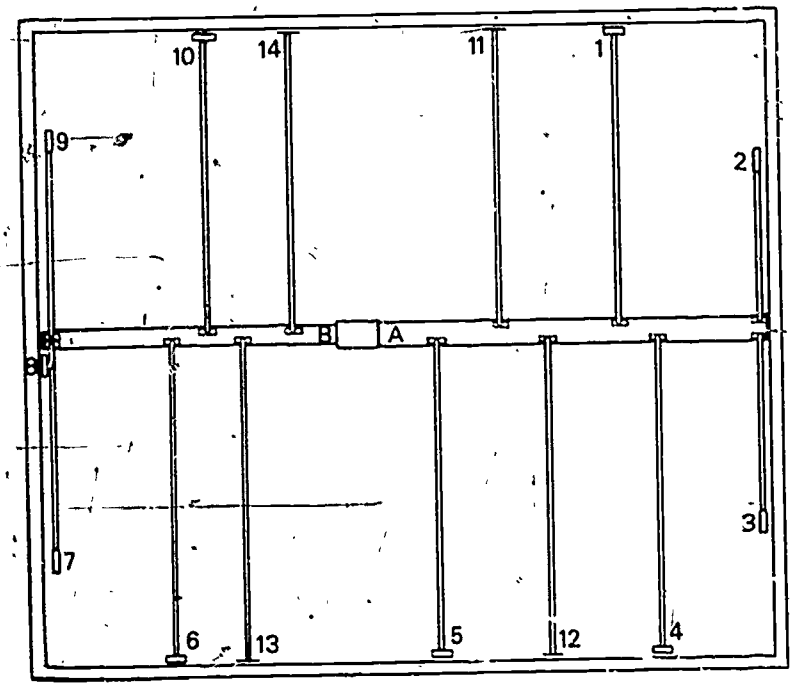

Perimeter Loop Systems

Perimeter Loop Radial Duct System

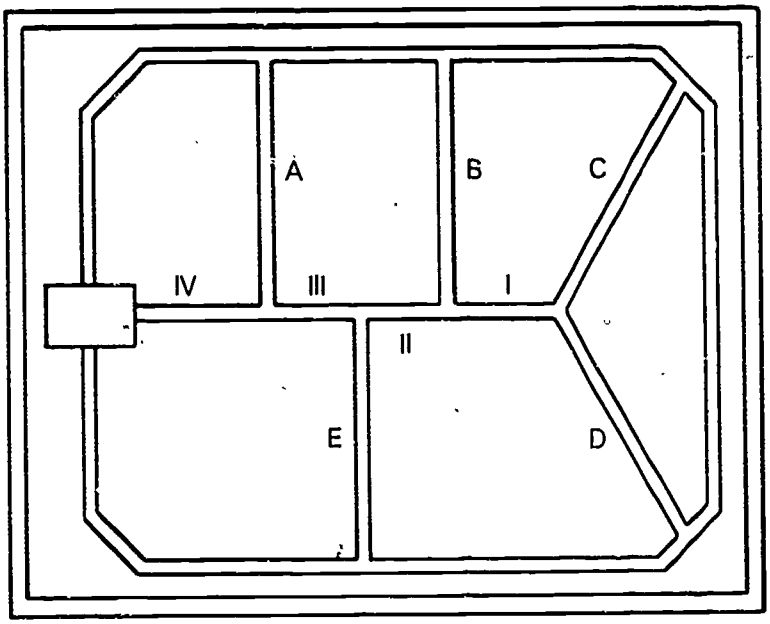

Perimeter Loop Trunk Duct System

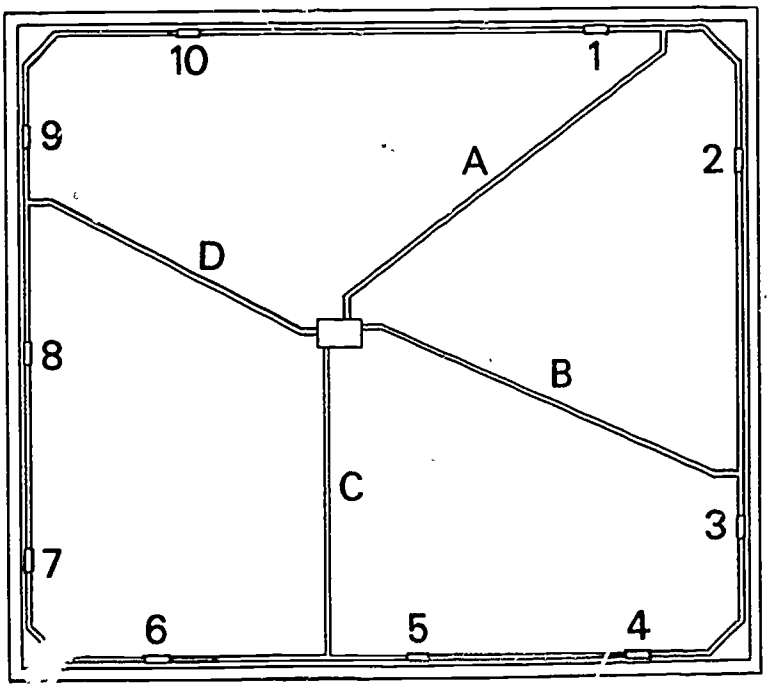

Climatic Zone Map for System Selection

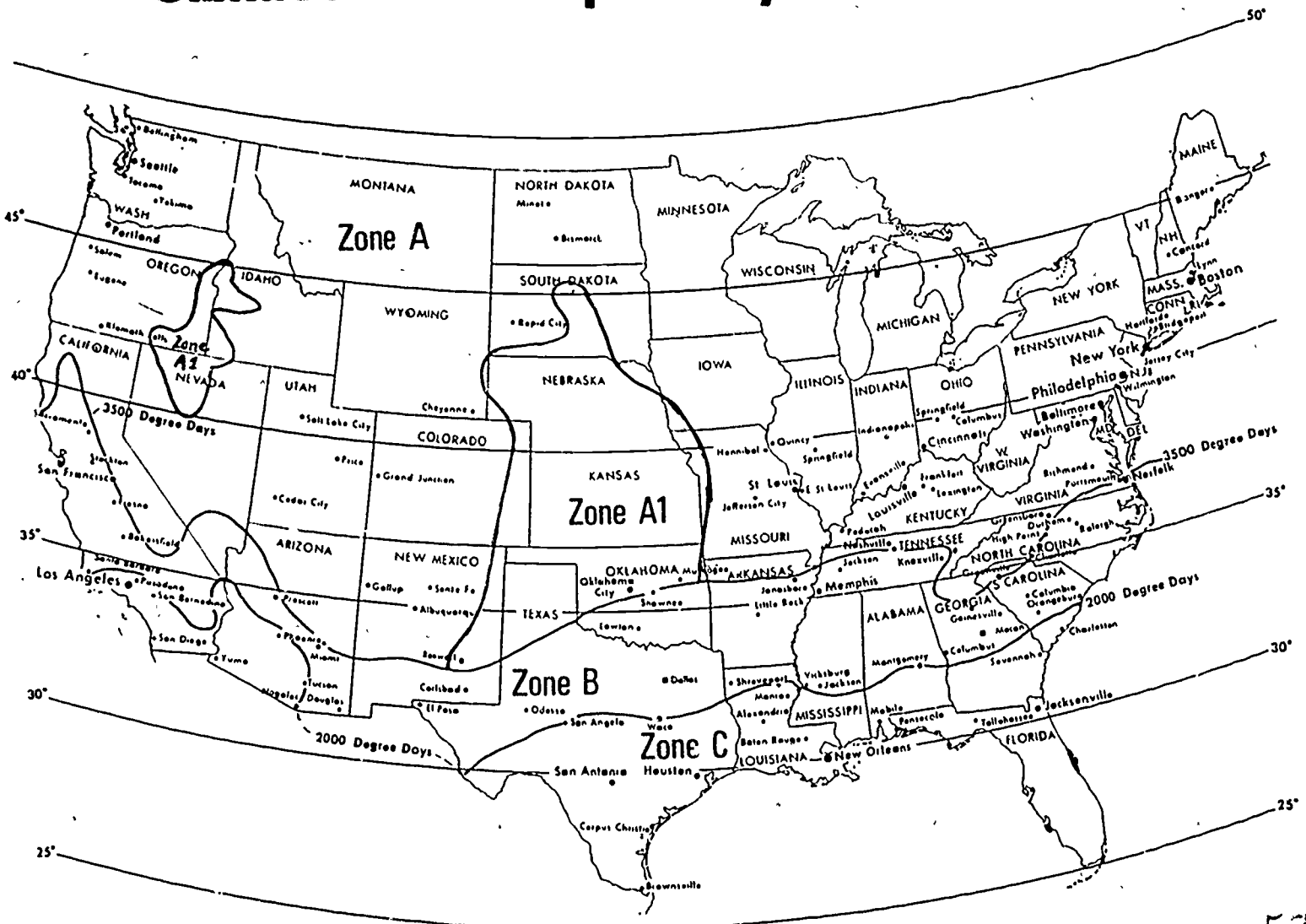

Courtesy of Air-Conditioning Contractors of America

FORCED AIR HVAC SYSTEMS
UNIT XI

ASSIGNMENT SHEET #1--ESTIMATE HEAT LOSS FOR A TEMPORARY RESIDENCE

Directions: A company that manufactures windmills needs to house employees who will be involved in a three-year experimental project. The company will use a prefabricated temporary residence constructed to provide an office for five employees and a crew area for six employees. The floor plan and specifications are shown in Figure 1. Using tables in *Manual J* and a "Form J-1 Worksheet," estimate the heat loss for the residence.

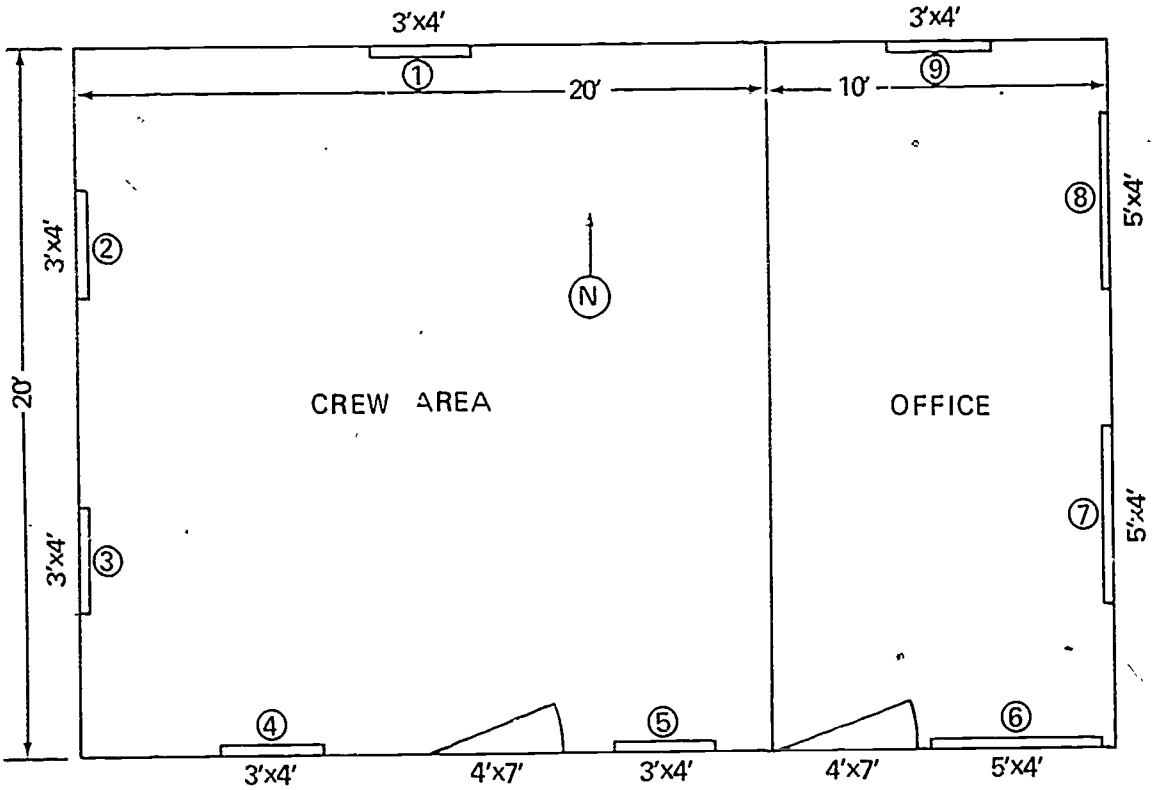

FIGURE 1

Construction specifications:

Walls--Wood frame with no insulation
Wall height--8' on the north, 10' on the south to facilitate a shed roof
Windows--Jalousie with storm sash; windows #7 and #8 have awnings that provide a 1' overhang
Doors--Wood with weatherstripping
Roof-ceiling-combination--Wood with no insulation covered with asphalt roll roofing
Floors--Wood over supporting skids that form a vented area
Ducts--All will be in conditioned space
Location--Five miles west of Russell, Kansas
Inside design temperature: Winter-65, Summer-75

ASSIGNMENT SHEET #1

Procedure for heat loss calculation on Form J-1:

1. Complete winter design conditions on the front of Form J-1 to include outside temperature, inside temperature, and the design temperature difference for a geographical point five miles west of Russell, Kansas

2. List "Crew Area" as the name of room in column 1, and complete items 2 through 4 from construction specifications

   (NOTE: Since the construction building has a shed roof, the height of exposed walls north and south will be different and should be averaged as indicated in item 2-5 of *Manual J*.)

3. List "Office" as name of room in column 2 and complete items 2 through 4 from construction specifications

   (NOTE: Be sure to average height of exposed walls.)

4. Enter on line 5a, information column, the construction number for the type of exposed walls for both rooms

   (NOTE: For convenience, the column to the left of the "Entire House" column will be referred to as the "information" column.)

5. Enter in column 1, line 5a, the square footage of exposed walls in the crew area

6. Enter in column 2, line 5a, the square footage of exposed walls in the office

7. Enter on line 6a, information column, the construction number for the type of windows in both rooms

8. Enter on line 6a, information column, the correct HTM heating in the Htg block

9. Enter the total square footage of windows in the crew area on line 6a, column 1, in area block

10. Multiply the window HTM on line 6a by the square footage for windows in the crew area and enter in the Htg block on line 6a, column 1

11. Enter the total square footage of windows in the office on line 6a, column 2, in area block

12. Multiply the window HTM on line 6a by the square footage for windows in the office and enter in the Htg block on line 6a, column 2

13. Add the window Btuh heat loss figures for both rooms and enter the total in the Htg block on line 6a under "Entire House" column

14. Enter on line 8, information column, the construction number for the doors in both rooms

15. Enter on line 8, information column, Htg block, the correct HTM heating for the doors in both rooms

ASSIGNMENT SHEET #1

16. Enter on line 8, column 1, area block, the square footage of the door in the crew area

17. Multiply the door HTM Htg on line 8 by the square footage of the door in the crew area and enter on line 8, column 1, Htg block

18. Enter on line 8, column 2, area block, the square footage of the door in the office

19. Multiply the door HTM Htg on line 8 by the square footage of the door in the office and enter on line 8, column 2, Htg block

20. Add the door Btuh heat loss for both rooms and enter the total in the Htg block on line 8 under "Entire House" column

21. Enter on line 9a, information column, the construction number for the net exposed walls in both rooms

22. Enter on line 9a, information column, Htg block, the HTM Htg for the net exposed walls in both rooms

23. Subtract from line 5a, area, column 1, the total of lines 6a and 8, area, column 1, and enter on line 9a, area, column 1

24. Mutliply the net square footage of exposed walls in column 1 by the HTM Htg for net exposed walls, and enter on line 9a, Htg block, column 1

25. Subtract from line 5a, area, column 2, the total of lines 6a and 8, area, column 2, and enter on line 9a, area, column 2

26. Multiply the net square footage of exposed walls in column 2 by the HTM Htg for net exposed walls, and enter on line 9a, Htg block, column 2

27. Add the net exposed walls Btuh heat loss for both rooms and enter the total in the Htg block on line 9a, "Entire House" column

28. Enter on line 10a, information column, the construction number for the type of roofs over both rooms

29. Enter on line 10a, information column, the correct HTM Htg for the roof over both rooms

30. Enter on line 10a, area, column 1, the total square footage of the roof over the crew area

31. Multiply the roof HTM on line 10a by the total square footage of the roof over the crew area, and enter on line 10a, Htg block, column 1

32. Enter on line 10a, area, column 2, the total square footage of the roof over the office

33. Multiply the roof HTM on line 10a by the total square footage of the roof over the office, and enter on line 10a, Htg block, column 2

ASSIGNMENT SHEET #1

34. Add the roof Btuh heat loss for both rooms, and enter the total in the Htg block on line 10a, "Entire House" column

35. Enter on line 11a, information column, the construction number for the type of floor in both rooms

36. Enter on line 11a, information column, the correct HTM Htg for the floor in both rooms

37. Enter on line 11a, area, column 1, the total square footage of the floor in the crew area

38. Multiply the total square footage of the floor in the crew area by the HTM Htg for floors and enter on line 11a, Htg, column 1

39. Enter on line 11a, area, column 2, the total square footage of the floor in the office

40. Multiply the total square footage of the floor in the office by the HTM Htg for floors and enter on line 11a, Htg, column 2

41. Add the floor Btuh heat loss for both rooms, and enter the total in the Htg block on line 11a, "Entire House" column

42. Total all entries in the Htg blocks under "Entire House" column and enter on line 13, Htg block, "Entire House" column

43. Retain your completed heat loss estimate for use in a related assignment

FORCED AIR HVAC SYSTEMS
UNIT X!

ASSIGNMENT SHEET #2--CALCULATE SHADED AND UNSHADED GLASS AREAS FOR USE IN HEAT GAIN ESTIMATES

Directions: Using Table A from the Form J-1 Worksheet and Table B-1 in *Manual J*, complete a table that will show the correct shaded and unshaded glass area for the temporary residence in Assignment Sheet #1

Procedure for completing Table A:

1. Enter in order the direction each window in the structure faces on line 1 of Table A

   (NOTE: To avoid confusion, number each window as it appears on the floor plan.)

   Example: 1. Direction which window faces N-1, W-2, W-3, S-4, S-5, etc.

2. Enter in order the total square footage of each window area on line 2 of Table A

3. Enter in order the width of each window on line 3 of Table A

4. Determine the shaded area per foot of overhang only for windows that are shaded by referring to Table B-1 and enter the figures beneath the windows they apply to on line 4 of Table A

5. Enter the width of the overhang for the windows that have overhang on line 5 of Table A

6. Enter the total square footage of shaded glass by multiplying the individual entries on line 4 by the appropriate individual entries on line 5, and enter on line 6 of Table A

7. Enter the total square footage of unshaded glass by subtracting the individual entries on line 6 from the appropriate individual entries on line 2, and enter on line 7 of Table A

8. Retain your completed Table A for use in a related assignment

FORCED AIR HVAC SYSTEMS
UNIT XI

ASSIGNMENT SHEET #3--ESTIMATE HEAT GAIN FOR A TEMPORARY RESIDENCE

Directions: Using the floor plan and construction specifications outlined in Assignment Sheet #1, complete a Form J-1 Worksheet estimating heat gain for the residence.

Procedure for completing Form J-1:

1. Complete summer design conditions on the front of Form J-1 for Russell, Kansas, assuming an inside design temperature of 75°F

   (NOTE: For heat gain calculations, use the same Form J-1 Worksheet used for Assignment Sheet #1.)

2. Use the completed Table A on the back of Form J-1 Worksheet from Assignment Sheet #2

3. Enter on line 7, the HTM Clg for all windows facing north

4. Enter on line 7, the HTM Clg for all windows facing east and west

5. Enter on line 7, the HTM Clg for all windows facing south

6. Calculate the square footage for all north facing windows in the crew area and enter the figure on line 7, area, column 1

7. Calculate the square footage for all west facing windows in the crew area and enter the figure on line 7, area, column 1

8. Calculate the square footage for all south facing windows in the crew area and enter the figure on line 7, area, column 1

9. Multiply the HTM Clg on line 7 north by the square footage in column 1, area, and enter in the Clg block under column 1 opposite line 7 north

10. Multiply the HTM Clg on line 7 east and west by the square footage in column 1, area, and enter in the Clg block under column 1 opposite line 7 east and west

11. Multiply the HTM Clg on line 7 south by the square footage in column 1, area, and enter in clg block under column 1 opposite line 7 south

12. Calculate the square footage for all north facing windows in the office and enter the figure on line 7, area, column 2

13. Calculate the square footage for all east facing windows in the office with adjustments made from Table A and enter the figure on line 7, area, column 2

14. Calculate the square footage for all south facing windows in the office with adjustments made from Table A and enter the figure on line 7, area, column 2

15. Multiply the HTM Clg on line 7 north by the square footage in column 2, area, and enter in the Clg block under column 2 opposite line 7 north

ASSIGNMENT SHEET #3

16. Multiply the HTM Clg on line 7 east by the square footage in column 2, area, and enter in the Clg block under column 2 opposite line 7 east

17. Multiply the HTM Clg on line 7 south by the square footage in column 2, area, and enter in the Clg block under column 2 opposite line 7 south

18. Add the totals in columns 1 and 2 under the Clg block on line 7 north, and enter this total under Clg block in "Entire House" column on line 7 north

19. Add the totals in columns 1 and 2 under the Clg block on line 7 east and west, and enter this total under Clg block in "Entire House" column on line 7 east and west

20. Add the totals in columns 1 and 2 under the Clg block on line 7 south, and enter this total under Clg block in "Entire House" column on line 7 south

21. Select the proper HTM (cooling) for doors from Table 5, and enter it in the Clg block in the information column

22. Multiply the HTM (cooling) for doors by the square footage already entered in column 1, area, and put the total under the Clg block in column 1

23. Multiply the HTM (cooling) for doors by the square footage already entered in column 2, area, and put the total under the Clg block in column 2

24. Add the totals in the Clg blocks in columns 1 and 2 on line 8, and enter the figure on line 8 in the Clg block under "Entire House" column

25. Select the correct HTM (cooling) for net exposed walls and enter on line 9a under the Clg block in the information column

26. Multiply the HTM (cooling) for net exposed walls by the square footage already entered in column 1, area, and put the total under the Clg block in column 1 on line 9a

27. Multiply the HTM (cooling) for net exposed walls by the square footage already entered in column 2, area, and put the total under the Clg block in column 2 on line 9a

28. Add the totals in the Clg blocks, line 9a, in columns 1 and 2, and enter the figure in the "Entire House" column in the Clg block on line 9a

29. Select the correct HTM (cooling) for roofs and enter in the Clg block in the information column on line 10a

    (NOTE: Remember that the roof is covered with a dark material.)

30. Multiply the HTM (cooling) for roofs by the square footage already entered in column 1, area, and put the total under the Clg block in column 1 on line 10a

31. Multiply the HTM (cooling) for roofs by the square footage already entered in column 2, area, and put the total under the Clg block in column 2 on line 10a

ASSIGNMENT SHEET #3

32. Add the totals in the Clg blocks in columns 1 and 2 on line 10a, and enter the figure on line 10a in the Clg block under the "Entire House" column

33. Select the correct HTM (cooling) for floors and enter in the Clg block in the information column on line 11a.

34. Multiply the HTM (cooling) for floors by the square footage already entered in column 1, area, and put the total under the Clg block in column 1 on line 11a

35. Multiply the HTM (cooling) for floors by the square footage already entered in column 2, area, and put the total under the Clg block in column 2 on line 11a

36. Add the totals in the Clg blocks on line 11a in columns 1 and 2, and enter the figure on line 11a in the Clg block under "Entire House" column

37. Compute the heat gain from people for the crew area and enter on line 16 in the Clg block under column 1

38. Compute the heat gain from people for the office and enter on line 16 in the Clg block under column 2

39. Add the totals for heat gain from people and enter the figure on line 16 in the Clg block under the "Entire House" column

40. Total all entries in the Clg blocks under column 1 and enter on line 17 column 1

41. Total all entries in the Clg blocks under column 2 and enter on line 17 column 2

42. Add the totals on line 17, Clg blocks, columns 1 and 2, and enter the figure on line 17 in the "Entire House" column

    (NOTE: Since there is no duct Btuh gain, line 18 will have no entries.)

43. Transfer all subtotals to the correct places on line 19

44. Check the total on line 19 under the "Entire House" column by adding all figures in the Clg blocks under "Entire House" column

45. Multiply by 1.3 the figure in the Clg block, "Entire House" column, on line 19

46. Enter the total Btuh gain for the structure in the Clg block under the "Entire House" column on line 20

47. Retain your assignment sheet for use in a related assignment

FORCED AIR-HVAC SYSTEMS
UNIT XI

ASSIGNMENT SHEET #4--EVALUATE THE ADDITION OF INSULATION IN RELATION TO HEAT LOSS AND HEAT GAIN

Directions: Using the Form J-1 Worksheet from Assignment Sheets #1, #2, and #3, enter "Entire House" in column number 3, add all square footage totals from columns 1 and 2, and place these totals in the appropriate blocks under the new "Entire House" column

Procedure for completing Form J-1:

1. Assume the residence has double-hung windows with double glass and the HTM (heating) is 65

2. Enter on line 6a Htg under the new "Entire House" column, the correct Btuh figure assuming the residence has double-hung windows with double glass and the HTM (heating) is 65

3. Enter on line 8 Htg under the new "Entire House" column, the correct Btuh figure assuming the residence has wood doors weatherstripped and with storm doors and the HTM (heating) is 85

4. Enter on line 9a Htg under the new "Entire House" column, the correct Btuh figure assuming the residence has wood walls with batt insulation 3-1/2" thick and an HTM (heating) of 4

5. Enter on line 10a Htg under the new "Entire House" column the correct Btuh figure assuming the residence has roof-ceiling combination with 6" of insulation and an HTM (heating) of 3

6. Enter on line 11a Htg under the new "Entire House" column the correct Btuh figure assuming the residence has a floor with 3" of insulation and an HTM (heating) of 5

7. Enter on line 13 Htg under the new "Entire House" column the subtotal Btuh loss

8. Divide the subtotal on line 13 under the new "Entire House" column by the subtotal on line 13 under the original "Entire House" column, convert the figure to a percentage, and enter it on line 13 next to the listing of Sub Total Btuh Loss (round the figure off to the nearest percentage)

9. Determine the actual dollar amount that could be saved in heating costs over a 3-year period if the temporary residence were insulated as outlined in this assignment sheet, that the average annual cost of heating the uninsulated structure were $1,200, and that Btuh heat loss is directly proportional to the cost of operating heating equipment

10. Enter the actual dollar amount determined in procedure 8 on line 15 next to Total Btuh Loss

11. Assume the actual dollar amount saved for operating cooling equipment would be equal to 70% of the savings realized for operating heating equipment if the building were insulated

ASSIGNMENT SHEET #4

12. Enter the actual dollar amount determined in procedure 10 on line 18 next to Duct Btuh Gain

13. Total the entries made in procedures 9 and 11 and enter the actual dollar amount just below line 21, Btuh for Air Quantities

14. Evaluate the addition of insulating factors in relation to the cost of operating heating and cooling as:

    a. Significant

    b. Moderate

    c. Insignificant

15. Evaluate the addition of insulating factors in a situation where the additional cost of insulation would exactly equal the amount of savings over a 36-month period by classifying them as:

    a. Insignificant because insulation materials are in short supply

    b. Significant because even if the two costs balance out, there is still an appreciable savings of vital energy

FORCED AIR HVAC SYSTEMS
UNIT XI

ASSIGNMENT SHEET #5--ESTIMATE HEAT LOSS AND HEAT GAIN FOR YOUR DESIGN PROJECT

Directions: Using *Manual J* and "Form J-1 Worksheet," estimate the heat loss and heat gain for your design project. Refer to Assignment Sheets #1 and #3 for guidelines.

FORCED AIR HVAC SYSTEMS
UNIT XI

ASSIGNMENT SHEET #6--DRAW AN HVAC PLAN FOR YOUR DESIGN PROJECT

Directions: Draw an HVAC plan for the house plan that you drew in Unit VI, "Working Drawings." Be sure to include both supply-air ducts and return-air ducts and use correct symbols for all items. Your instructor should approve the type of system that you select.

FORCED AIR HVAC SYSTEMS
UNIT XI

ASSIGNMENT SHEET #7--PREPARE EQUIPMENT SCHEDULES

Directions: Prepare equipment schedules for the problems below. Title your schedules "Specifications for HVAC Equipment."

Problem A: Prepare an equipment schedule using the following list. Select only those items that should appear in an equipment schedule.

1. Manufacturer is Lennox
2. Model number is CBP 10-51
3. Heating capacity is 61,400 Btuh
4. Cooling capacity is 48,900 Btuh
5. Compressor is painted black
6. Total air volume for cooling is 1600 cfm
7. Total air volume for heating is 1600 cfm
8. System is a heat pump
9. Cooling compressor watts input is 3960
10. Heating compressor watts input is 4495
11. Line voltage data is 230v/60hz/lph
12. Energy efficiency rating (EER) is 8.2
13. Coefficient of performance (COP) is 2.9
14. Unit is easy to service

Problem B: Prepare an equipment schedule for your design project. Use *Sweet's Catalog File* or *Architectural Graphic Standards* for your equipment information. This should correspond to equipment used in Assignment Sheet #6.

FORCED AIR HVAC SYSTEMS
UNIT XI

ANSWERS TO ASSIGNMENT SHEETS

Assignment Sheet #1

1. Outside temperature: 0°F
   Inside temperature: 65°F
   Design temperature difference: 65 degrees
2. Name of room: Crew Area
   Running Ft. Exposed Wall: 60
   Room Dimensions, ft: 20 x 20
   Ceiling Ht, Ft: 9 (averaged)
   Directions Room Faces: N, W, S
3. Name of room: Office
   Running Ft Exposed Wall: 40
   Room Dimensions, ft: 10 x 20
   Ceiling Ht, Ft: 9 (averaged)
   Directions Room Faces: N, E, S

4. 10 (a)
5. 540
6. 360
7. 5 (b)
8. 75
9. 60
10. 4500
11. 72
12. 5400
13. 9900
14. 9 (b)
15. 155
16. 28
17. 4340
18. 28
19. 4340
20. 8680
21. 10 (a)
22. 16
23. 452
24. 7232
25. 260
26. 4160
27. 11392
28. 16 (a)
29. 20
30. 400
31. 8000
32. 200
33. 4000
34. 12000
35. 17 (b)
36. 18
37. 400
38. 7200
39. 200
40. 3600
41. 10800
42. 52772
43. 52772
44. N/A

Assignment Sheet #2

1. N-1, W-2, W-3, S-4, S-5, S-6, E-7, E-8, N-9
2. 12, 12, 12, 12, 12, 20, 20, 20, 12
3. 3, 3, 3, 3, 3, 5, 5, 5, 3
4. 0, 0, 0, 0, 0, 0, 1, 1, 0
5. 0, 0, 0, 0, 0, 0, 2, 2, 0
6. 0, 0, 0, 0, 0, 0, 2, 2, 0
7. 12, 12, 12, 12, 12, 20, 18, 18, 12
8. N/A

Assignment Sheet #3

1. Outside: 100°F
   Inside: 75°F
   North Latitude: 40 degrees
   Daily Range: H
2. As recorded in Assignment Sheet #2
3. 35
4. 95
5. 55
6. 12
7. 24
8. 24
9. 420
10. 2280
11. 1320
12. 12
13. 36
14. 20
15. 420
16. 3420
17. 1100
18. 840
19. 5700
20. 2420
21. 13.5
22. 756
23. 378
24. 5340
25. 7.5
26. 3390
27. 1950
28. 5340
29. 13
30. 5200
31. 2600
32. 7800
33. 5
34. 2000
35. 1000
36. 1000
37. 1800
38. 1500
39. 3300
40. 16788
41. 12368
42. 29156
43. 29156
44. 29156
45. 37903
46. 37903
47. N/A

Assignment Sheet #4

2. 8580
3. 4760
4. 2848
5. 1800
6. 3000
7. 20988
8. 40% (39.7 rounded off)
9. $1,440
10. $1,440
11. N/A
12. $1,008
13. $2,448
14. a
15. b

(NOTE: Answers should be modified as changes are made in *Manual J.*)

Assignment Sheet #5--Evaluated to the satisfaction of the instructor

Assignment Sheet #6--Evaluated to the satisfaction of the instructor

Assignment Sheet #7

A. Schedule should include, at a minimum, the following items:

Specifications for HVAC Equipment

Lennox heat pump	
Model Number	CBP 10-51
Heating Capacity	61,400 Btuh
Cooling Capacity	48,900 Btuh
Cooling Air Volume	1,600 cfm
Heating Air Volume	1,600 cfm
Watts Input	
Cooling Compressor	3,960
Watts Input	
Heating Compressor	4,495
Line Voltage	230v/60hz/lph
EER	8.2
COP	2.9

B. Evaluated to the satisfaction of the instructor

FORCED AIR HVAC SYSTEMS
UNIT XI

NAME _____

TEST

1. Match the terms on the right with the correct definitions.

(NOTE: The terms on this page should be matched to the definitions on this page; the same procedure applies on the next page.)

_____a. Heating, ventilating, and air conditioning

_____b. The amount of heat required to raise the temperature of one pound of water one degree Fahrenheit

_____c. The unit used to express hourly heat flow

_____d. The movement of heat from one substance or region to another

_____e. An index of heat transfer through one square foot of a structural component at specific design conditions

_____f. The rating given to a material's ability to resist heat transfer

_____g. One divided by the total R-values of a component

_____h. The science of measuring and changing the properties of air

_____i. Controlled air brought into a structure

_____j. Uncontrolled air that leaks into a structure

_____k. Water vapor or moisture added to the atmosphere or any material

_____l. The amount of heat lost to the outdoors from all building surfaces, walls, floors, doors, and windows exposed to outdoors or adjoining spaces with different temperatures

_____m. The amount of heat gained from the outdoors from all building surfaces, walls, floors, doors, windows exposed to outdoors or adjoining spaces with different temperatures

1. Infiltration
2. HTM
3. R-value
4. Heat loss
5. Btu
6. Heat gain
7. Heat transfer
8. U-value
9. Humidity
10. Psychometrics
11. HVAC
12. Ventilation
13. Btuh

_____n. A system of heating or cooling by a circulating fluid as water or vapor

_____o. Heating by radiation from electrical conductors or hot air or hot water pipes

_____p. Cubic feet per minute

_____q. Feet per minute

_____r. Device which extracts heat from the air

_____s. Machine that compresses gases

_____t. The direct passage of energy, light, or heat from one object to another through contact

_____u. The process of emitting radiant energy in the form of waves or particles

_____v. The measure of the resistance of ducts, grilles, filters, and other surfaces to the flow of air

_____w. A box-like fitting into which an air handler discharges air or from which the air handler receives return air in a duct system

_____x. Tube or channel through which air is conveyed or moved

_____y. A duct fitting which adapts the duct to a wall stack or to a register or grille

_____z. The point of departure from a duct to which a duct fitting is attached to accomplish branching of ductwork

____aa. Resistance to air flow created by the structural design of a fitting, indicated by the length of straight duct which would offer the same resistance

____bb. The sum of the measured length of straight duct plus the equivalent lengths of fittings in the duct

____cc. The physical measurement of a duct

____dd. Device used to control the volume of air flow passing through or out of a duct or register

14. Radiant heating
15. Boot
16. Cfm
17. Take-off
18. Static pressure
19. Effective length
20. Radiation
21. Plenum
22. Damper
23. Fpm
24. Hydronics
25. Heat pump
26. Conduction
27. Actual measured length
28. Equivalent length
29. Compressor
30. Duct

____ee. A fixed or adjustable device used to direct air flow

____ff. A louvered opening usually found in a return air opening

____gg. A grille that has a regulating damper device for controlling amount of air flow and vanes to control air direction

____hh. A register which delivers fan shaped patterns of air into a room

____ii. A method of duct design used to meter air flow so that air is distributed proportionately to all conditioned spaces

____jj. The sum of the negative and positive static pressures being exerted by a blower

____kk. Air currents set in motion by cooling or warming of air brought in contact with hot or cold surfaces such as walls or windows

____ll. Condition in which there is little or no air movement in room; air lies in temperature layers

____mm. Temperature change from one level or stratum to the next as in the change from floor to ceiling

____nn. The transfer of large masses of air due to convection currents in a structure often caused by warm air rising and cooler air falling through building accesses such as stairs

____oo. A thin, rectangular duct which runs vertically inside a wall

____pp. A peculiar ability of moving air to cling to a ceiling or a wall

____qq. An arbitrary maximum velocity of an air stream which spreads or drops into a living area, usually considered comfortable at 35-50 fpm

____rr. The distance a high sidewall supply outlet delivers air before slowing to terminal velocity

31. Convection currents
32. Register
33. Wall stack
34. Temperature gradient
35. Grille
36. Ceiling or wall effect
37. Cascade (water-fall) effect
38. Vane
39. Terminal velocity
40. System pressure
41. Diffuser
42. Throw
43. Equal friction method
44. Stratification of air

____ss. The distance air falls vertically below a high sidewall supply outlet before slowing to terminal velocity

____tt. The fan-like width of an air stream from a diffusing type supply outlet at the point of terminal velocity

____uu. A mixture of supply air from an outlet and room air at velocities above 150 fpm

____vv. Room air which is dragged into the primary air and raised to higher velocities and temperatures inside the primary air envelope

____ww. Floor heating by burying ducts in concrete slab floors or by running supply ducts under floors

____xx. The phenomenon of static pressure diminishing from maximum at the blower to zero after passing through an outlet regardless of duct length

____yy. Inches water gauge measured with a monometer

45. Primary air
46. IWG
47. Drop
48. Pressure drop
49. Entrained air
50. Floor warming
51. Spread

2. Sequence the steps in HVAC design by placing the correct sequence numbers in the appropriate blanks.

_____a. Design an air distribution system so that duct work and grilles can supply designed comfort levels related to seasonal demands in specific geographic locations

_____b. Calculate heating and cooling loads for the structure; express in total Btuh's for the convenience of sizing heating and cooling equipment

_____c. Size the heating and cooling equipment to afford the customer maximum comfort and minimum expense

3. Identify the types of supply duct systems.

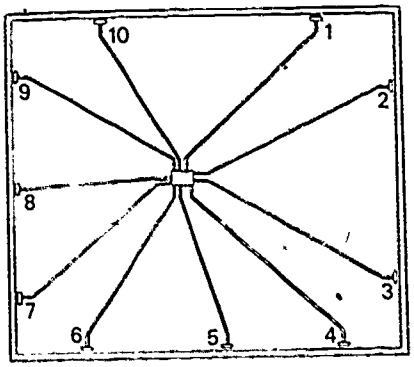

a. _____

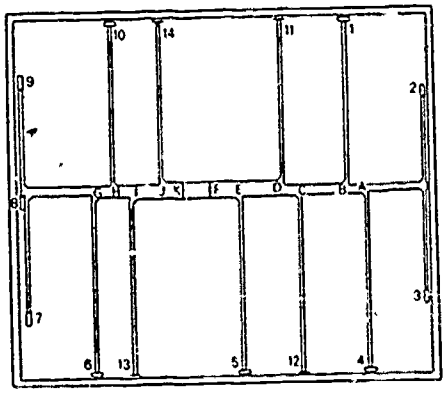

b. _____

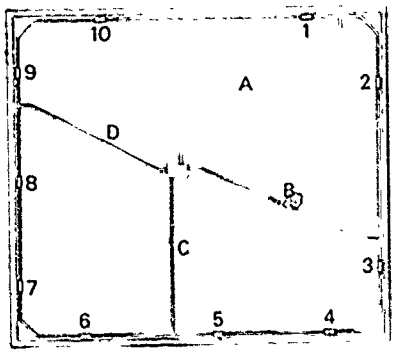

c. _____

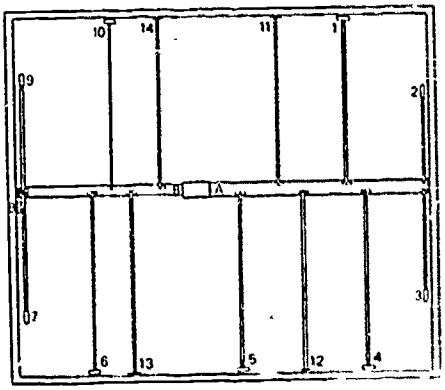

d. _____

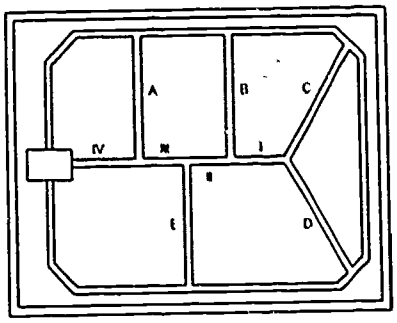

e. _____

4. Match the climatic zones on the right with their significance in HVAC design.

_____a. Cold weather is more severe and prolonged, the summers are relatively mild, and HVAC design must pay particular attention to heating

_____b. Has the same characteristics as Zone A, but the summer temperatures are, on the average, higher than in Zone A, and HVAC design must provide for both heating and cooling

_____c. Has less severe winters than Zone A, but hotter days for extended periods, and HVAC design must provide a wall balanced heating and cooling system

_____d. Has mild winters and hot summers, and HVAC design must pay particular attention to cooling

1. Zone B
2. Zone A-1
3. Zone C
4. Zone A

5. Match locations of registers and grilles on the right with the correct advantages and disadvantages.

(NOTE: Locations on the right may be used more than once.)

_____a. Advantage--Installation is less costly

_____b. Disadvantage--Furniture placement is difficult

_____c. Disadvantage--Doesn't heat floors directly

_____d. Advantage--Delivers conditioned air at point of greatest heat loss and heat gain, which is the outside of the structure

_____e. Disadvantage--Areas of greatest heat loss and gain such as windows are difficult to condition unless special attention is paid to selection of registers

_____f. Advantage--Can be located in center of room or near outside wall

1. High inside wall
2. Ceiling
3. Perimeter system
4. Low inside wall

6. Identify the following symbols for elements of HVAC design.

a. 

_____

b. 

_____

c. 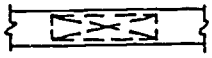

_____

d. 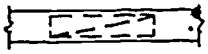

_____

e. 12" x 18" →

_____

f. 

_____

g. _____

_____

h. _____

_____

i. (T)

_____

j. [H]

_____

k. [R.]

_____

l. _____ H _____

_____

7. Select true statements concerning rules of thumb for drawing HVAC plans by placing an "X" in the appropriate blanks.

_____a. Proper symbols must be used

_____b. Ducts do not have to be drawn to scale

_____c. Pipes are not drawn to scale; they are indicated by a single line

_____d. Sizes should be shown on the plan

_____e. There should be at least 5 registers in each large area to be heated or cooled

_____f. Large areas should only be counted as one room

_____g. Any area with more than 15' of exterior wall should have two or more outlets

_____h. Every room needs an individual thermostat.

_____i. Thermostats should not be on an inside partition

_____j. Special considerations should be made for the proposed number of occupants and in-dwelling activities

8. List two rules of thumb for sizing round pipe and rectangular ducts.

a. _____

b. _____

9. Solve the following problems concerning rules of thumb for determining duct size.

a. If a duct is to serve five 6" pipes, what should be the size of the plenum duct?

_____

b. If a duct is to serve eight 8" pipes, what should be the size of the plenum duct?

_____

10. Differentiate between types of return-air duct systems by placing an "X" next to the description of a simple return-air duct system.

_____a. A system that provides a return-air grille for each conditioned room, except that the return air is not normally taken directly from kitchens or bathrooms

_____b. A system that provides from one to three centrally located return-air grilles for the entire structure

11. Match the structural designs on the right with their typical return-air systems.

_____a. Frequently have simple return-air duct systems	1. Basement structures
_____b. May have simple or multiple return-air duct systems	2. Crawl space structures
_____c. Normally require multiple return-air duct systems	3. Slab floor structures

12. State the basic rule for return-air duct systems.

_____

_____

13. List four factors in determining heat loss and heat gain.

a. _____

b. _____

c. _____

d. _____

14. Match equipment schedules, calculations, and notes on the right with their functions on an HVAC plan.

_____a. Orderly arrangement of components of the HVAC system provides a convenient means of specifying equipment and eliminates excessive information on the HVAC plan itself

_____b. Heat loss and heat gain calculations by room are important because they are the basis for equipment selection

_____c. Should provide sub-contractors or the builder with helpful or desirable information; they should be brief and to the point

1. Notes
2. Calculations
3. Equipment schedules

15. Arrange in order the procedure for drawing an HVAC plan by placing the correct sequence numbers in the appropriate blanks.

_____a. Insert proper symbols for location of registers, coils, or baseboard units

_____b. Use a hidden line to draw air return ducts and cold air return grilles

_____c. Draw the supply ducts and connect them to registers, diffusers, etc.

_____d. Indicate location of thermostats and other controls

_____e. Trace the basic HVAC plan from the floor plan; show exterior and interior walls, windows, doors, and all features related to the system

_____f. Locate heating and cooling equipment on the floor plan and indicate complementary systems for humidification, dehumidification, or air cleaning

_____g. Indicate the size of ducts or pipes and all attachments

_____h. Include required schedules

_____i. Complete title block, dimensions, and notes as necessary

16. Demonstrate the ability to:

    a. Estimate heat loss for a temporary residence.

    b. Calculate shaded and unshaded glass areas for use in heat gain estimates.

    c. Estimate heat gain for a temporary residence.

    d. Evaluate the addition of insulation in relation to heat loss and heat gain.

    e. Estimate heat loss and heat gain for your design project.

    f. Draw an HVAC plan for your design project.

    g. Prepare equipment schedules.

    (NOTE: If these activities have not been accomplished prior to the test, ask your instructor when they should be completed.)

FORCED AIR HVAC SYSTEMS
UNIT XI

ANSWERS TO TEST

1.

a.	11	n.	24	aa.	28	nn.	37
b.	5	o.	14	bb.	19	oo.	33
c.	13	p.	16	cc.	27	pp.	36
d.	7	q.	23	dd.	22	qq.	39
e.	2	r.	25	ee.	38	rr.	42
f.	3	s.	29	ff.	35	ss.	47
g.	8	t.	26	gg.	32	tt.	51
h.	10	u.	20	hh.	41	uu.	45
i.	12	v.	18	ii.	43	vv.	49
j.	1	w.	21	jj.	40	ww.	50
k.	9	x.	30	kk.	31	xx.	48
l.	4	y.	15	ll.	44	yy.	46
m.	6	z.	17	mm.	34		

2. a. 3
   b. 1
   c. 2

3. a. Radial or spider
   b. Trunk and branch reducing plenum
   c. Perimeter loop trunk duct
   d. Trunk and branch extended plenum
   e. Perimeter loop radial duct

4. a. 4
   b. 2
   c. 1
   d. 3

5. a. 1 or 4
   b. 4
   c. 2
   d. 3
   e. 1
   f. 2

6. a. Warm air supply
   b. Cold air return
   c. Second floor supply
   d. Second floor return
   e. Duct size and air flow
   f. Change in duct size
   g. Hot water heating return
   h. Hot water heating supply
   i. Thermostat
   j. Humidistat
   k. Register
   l. Humidification line

7. a, c, d, g, j

8. Any two of the following:
   a. Pipe should be either 6" or 8" in diameter
   b. When the system is used for cooling only or for both heating and cooling, 8" diameter pipe should be used
   c. All rectangular ducts are 8" deep and vary in width from 10" to 28"
   d. The sectional area of a supply duct should equal the total area of all the round register pipes

9. a. 8" x 12"
   b. 8" x 26"

10. b

11. a. 3
    b. 2
    c. 1

12. Must be designed for a specific air volume equal to, or greater than, the design air volume of the supply duct system

13. Any four of the following:
    a. Size of structure and the insulating qualities of its components
    b. Outside design temperature for heat loss
    c. Daily temperature range for heat gain
    d. Inside design temperature
    e. Design temperature difference for heat loss
    f. HTM heating or HTM cooling

14. a. 3
    b. 2
    c. 1

15. a. 3
    b. 4
    c. 5
    d. 6
    e. 1
    f. 2
    g. 7
    h. 8
    i. 9

16. Evaluated to the satisfaction of the instructor

ELECTRICAL
UNIT XII

UNIT OBJECTIVE

After completion of this unit, the student should be able to name parts of an electrical service entrance installation and match wiring devices and cables with their applications. The student should also be able to answer questions using the National Electric Code and locate electrical symbols on a floor plan. This knowledge will be evidenced by correctly performing the procedures outlined in the assignment sheets and by scoring 85 percent on the unit test.

SPECIFIC OBJECTIVES

After completion of this unit, the student should be able to:

1. Match terms related to electrical with the correct definitions.
2. Distinguish between types of lighting dispersement.
3. Name parts of electrical service entrance installation.
4. Distinguish between types of residential branch circuits.
5. Match wiring devices with common residential applications.
6. Match types of cables with common applications.
7. State conductor letter designations for installation conditions.
8. Select true statements concerning designing an electrical system for a residence.
9. Match electrical floor plan symbols with the correct names.
10. Name overcurrent circuit safety devices.
11. Demonstrate the ability to:
    a. Answer questions related to residential wiring practices using the NEC.
    b. Interpret conduit fill tables using the NEC.
    c. Locate allowable ampacities for various conductors using the NEC.
    d. Calculate service size and minimum number of circuits.
    e. Locate receptacle, switch, and lighting outlets.

ELECTRICAL
UNIT XII

SUGGESTED ACTIVITIES

I. Provide student with objective sheet.

II. Provide student with information and assignment sheets.

III. Make transparencies.

IV. Discuss unit and specific objeetives.

V. Discuss information and assignment sheets.

VI. Provide examples of residential and commercial electrical floor plans.

VII. Provide electrical supply catalogs and the current *National Electric Code* for use in the assignment sheets. The NEC may be obtained in soft or hardbound copies from the following: National Fire Protection Association, Battery March, Quincy, Mass. 02269.

(NOTE: The Code is revised every three years.)

VIII. Demonstrate the use of floor plan templates or electrical utility company's advertising type templates for drawing electrical symbols.

IX. Give test.

INSTRUCTIONAL MATERIALS

I. Included in this unit:

A. Objective sheet

B. Information sheet

C. Transparency masters

1. TM 1--Three Formulas from Ohm's Law
2. TM 2--Service Entrance Installation
3. TM 3--Typical Service Panel Arrangement
4. TM 4--Typical Distribution Panel Schematic
5. TM 5--Wiring Devices
6. TM 6--Wiring Devices (Continued)

7. TM 7--Wiring Devices (Continued)

8. TM 8--Wiring Devices (Continued)

9. TM 9--Wiring Devices (Continued)

10. TM 10--Low Voltage System

11. TM 11--Electrical Floor Plan

D. Assignment sheets

1. Assignment Sheet #1--Answer Questions Related to Residential Wiring Practices Using the NEC

2. Assignment Sheet #2--Interpret Conduit Fill Tables Using the NEC

3. Assignment Sheet #3--Locate Allowable Ampacities for Various Conductors Using the NEC

4. Assignment Sheet #4--Calculate Service Size and Minimum Number of Circuits

5. Assignment Sheet #5--Locate Receptacle, Switch, and Lighting Outlets

E. Test

F. Answers to test

II. References:

A. *National Electrical Code,* Boston: National Fire Protection Association, 1975.

B. Gebert, Kenenth L. *National Electrical Code Blueprint Reading.* Chicago 60637: American Technical Society, 1977.

C. *HUD Minimum Property Standards.* Washington, D. C.: U. S. Department of Housing and Urban Development, 1973.

D. Spence, William P. *Architecture Design - Engineering - Drawing.* Bloomington, IL: McKnight Publishing Co., 1979.

E. Stegman, George K. and Harry J. Stegman. *Architectural Drafting.* Chicago 60637: American Technical Society, 1974.

F. Willis, Charles D. *Blueprint Reading for Commercial Construction.* Albany, NY: 12205: Delmar Publishers/Litton Educational Publishing, Inc., 1979.

ELECTRICAL
UNIT XII

INFORMATION SHEET

I. Terms and definitions

A. National Electric Code (NEC)--A basic minimum standard covering the installation of electrical equipment to safeguard persons and property

(NOTE: Hereafter in this unit, this will be referred to as the NEC or the Code.)

B. Watt (W)--Unit of measure of electrical power

C. Kilowatt--One thousand watts

D. Volt (E)--Unit of measure of electrical pressure

E. Ampere (I)--Unit of measure of the intensity of the flow or current of electricity

F. Ohm (R)--Unit of measure of the resistance to the flow of electricity

G. Ohm's Law--A law which can be used for calculating wattage, voltage, and amperage for circuits (Transparency 1)

H. Ampacity--Current-carrying capacity of electric conductors expressed in amperes

I. Insulator--Material which does not permit the free flow of electrons

J. Conductor--Material which permits the free flow of electrons

K. Bare conductor--A conductor having no covering or electrical insulation

L. Covered conductor--A conductor encased with a material not recognized by the NEC as insulation

M. Insulated conductor--A conductor encased with a material recognized by the NEC as insulation

N. Grounded conductor--A circuit conductor that is intentionally connected to the earth or some conductor that serves in place of the earth

O. Grounding conductor--Connects equipment or wiring circuit grounded conductor to a grounding electrode

P. Circuit--A complete path for current to flow from the source through the load and back to the source

Q. Branch circuit--The circuit conductors between the final overcurrent device protecting the circuit and the outlet(s)

R. Circuit breaker--A switching device that automatically opens a circuit when the circuit has been overloaded

INFORMATION SHEET

S. Ground wire--A wire connecting the circuit or equipment to the earth or water pipes to minimize injuries from shock

T. Ground-fault circuit interrupter--A device that is sensitive to very low levels of current leakage to ground

(NOTE: This is commonly installed in the bath or kitchen, or outside near the swimming pool.)

U. Fuse--Overcurrent protective device with a circuit opening fusible part that is heated and severed by the passage of overcurrent through it

V. Receptacle--Contact device installed at the outlet for the connection of a single attachment plug

W. Outlet--A point on the wiring system at which current is taken to supply utilization equipment

X. Receptacle outlet--An outlet where one or more receptacles are installed

Y. Distribution panel--The electrical enclosure that contains the overcurrent protection for circuits and connects to the service conductor

(NOTE: This is sometimes called a load center.)

Z. Service entrance--The conductors from utility pole and service head which bring the current to the building through the meter to the distribution panel (Transparency 2)

AA. Service drop--The overhead service conductors from the last pole or other aerial support to and including the splices, if any, connecting to the service entrance conductors at the building or other structure

BB. Low voltage (residential remote control and signal circuits)--Wiring of less than 50 volts originating at a transformer

CC. Raceway--A metal-enclosed box that is placed on the floor prior to placement of concrete floor to allow for various outlets

DD. Busway--A preassembled metal box system used to distribute high-current loads

EE. Conduit--A channel or pipe, made of metal or plastic, in which conductors are run

FF. Electrical metal tubing (EMT)--Thin wall metal raceway of circular cross sections with integral or associated couplings, connectors, and fittings approved for the installation of electrical conductors

(NOTE: This is sometimes caled thin wall conduit.)

INFORMATION SHEET

GG. Flexible metal conduit--Spiral metal raceway designed for flexible installation with a circular cross section and integral or associated couplings, connectors, and fittings approved for the installation of electrical conductors

HH. Liquid-tight flexible metal conduit--Flexible metal conduit with an outer liquid-tight, nonmetallic, sunlight-resistant jacket

II. Rigid conduit--Similar to electrical metal tubing except that the pipe is heavier and is threaded

JJ. Nonmetallic sheathed cable--Two or more wires enclosed in a flexible plastic case

(NOTE: This is sometimes called Romex.)

KK. Interlocked armor cable (BX)--A flexible armor-shielded cable that has two or more conductors within the casing

LL. Knob and tube wiring--Wiring method using knobs, tubes, and flexible nonmetallic tubing for protection and support of single insulated conductors in walls and ceilings of buildings

MM. American wire gauge (AWG)--A standard size classification for copper and aluminum wires up to 0000

NN. Thousand circular mils (MCM)--The standard size classification for conductors larger than 0000

II. Types of lighting dispersement

A. Direct--

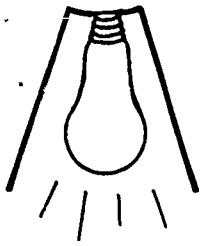

B. Indirect--

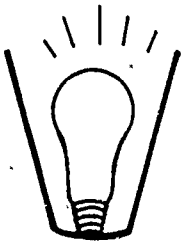

INFORMATION SHEET

C. Combination--

D. Diffused--

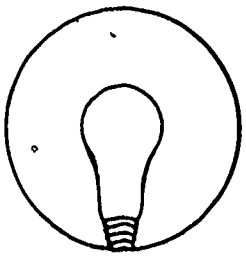

III. Parts of electrical service entrance installation (Transparencies 2, 3, and 4)

A. Electrical service line

(NOTE: This is the service drop.)

B. Meter socket trough

(NOTE: Meter is usually supplied by the utility company.)

C. Main disconnect switch (circuit breaker or fused)

D. Distribution panel

E. Weatherhead assembly

(NOTE: This is only for above ground service.)

IV. Types of residential branch circuits

A. General purpose circuit--15 or 20 amp circuit used for lighting and small appliances

B. Appliance circuit--20 amp circuit used for one or more outlets to which appliances are to be connected

C. Special purpose individual circuit--115/120 volt or 208/240 volt circuit used for one single outlet

Examples: Dryer, range-oven

INFORMATION SHEET

V. Wiring devices and common residential applications (Transparencies 5, 6, 7, 8, 9, and 10)

A. Cable

1. Nonmetallic sheathed cable

(NOTE: This is commonly called Romex.)

a. General residential rough-in

b. Circuit extensions in existing building

(NOTE: Nearly all the premises wiring in most new residential homes is done with NM cable.)

2. Underground feeder and branch circuit cable (UF)--Direct burial for yard lights or extensions

(NOTE: Check local code for depth.)

B. Concealed knob and tube wiring

1. Extensions of existing installations

2. Elsewhere by special permission

C. Rigid metal conduit

1. Through eave service masts to weatherhead

2. Underground circuit extension

3. In concrete walls, floors, or ceilings

4. Underground service riser

D. Electrical metallic tubing

1. Service raceway

(NOTE: EMT is not suitable for installations going through an eave.)

2. Protecting grounding conductor

E. Flexible metal conduit

(NOTE: This is commonly called Greenfield.)

1. Connecting recessed lighting fixtures

2. Enclosing motor leads

INFORMATION SHEET

F. Liquid-tight flexible metal conduit

1. Connecting air conditioning condensers to disconnects

2. Enclosing motor leads needing protection from liquids and vapors

G. Raceways

1. Interior circuit extensions where concealed work is not necessary or is not possible

2. On interior concrete surfaces

H. Low voltage (Less than 50V)

1. Chime circuits

2. Intercom wiring

3. Thermostat circuits

4. Lighting remote control

5. Smoke detectors

6. Burglar alarms

I. Rigid nonmetallic conduit or PVC (polyvinyl chloride)

1. In locations subject to severe corrosive conditions

2. In portions of dairies, laundries, canneries, or other wet locations

VI. Types of cables and common applications

A. Nonmetallic sheathed cable (NM)

1. Residential rough-in wiring in new construction

2. Extensions of existing residential wiring and new remodel

3. Feeders for sub-panels

B. Service entrance cable (SE)

1. Service entrance conductors if used with rain tight head

2. Branch circuit for ranges, cook tops, or clothes dryers

C. Low voltage cable

1. Thermostat control circuits

INFORMATION SHEET

2. Bell or chime control circuits

3. Low voltage lighting control circuits

D. Underground cable (UF)

1. Underground circuits to remote lighting such as yard lights

2. Branch circuits to out buildings such as garages

E. Underground service entrance cable (USE)--Underground service supply

VII. Conductor letter designations for installation conditions

A. T (Thermoplastic)--Dry locations

B. TW (Thermoplastic moisture resistant)--Dry and wet locations

C. THW (Thermoplastic moisture and heat resistant)--Dry and wet locations where more heat resistant qualities are needed

D. MTW (Moisture, heat, and oil-resistant thermoplastic)--Dry and wet locations where oil may be present or where more heat resistant qualities are needed

(NOTE: Refer to Code Table 310-13 for more applications.)

VIII. Designing an electrical system for a residence (Transparency 11)

A. A single pole switch controls a light or outlet from one location

B. A three-way switch is used to control a light from two locations

C. A four-way switch is used to control a light from three or more locations

D. Wall switches should be located on the door knob side of doors and on traffic side of arches

E. Switch locations should be placed so that a person can enter the house from any door and progress to any other part without being in the dark

F. Receptacle shall be placed so that no point on any usable wall space along the floor line is more than 6' from an outlet

G. Split-receptable outlets should be used in living and dining areas in order not to limit the use of radios, clocks, or appliances.

H. Master selector control for low voltage line control system should be in master bedroom

INFORMATION SHEET

I. The dashed lines on electrical plans indicate which fixtures or outlets are controlled by switches; these lines do not indicate the actual wiring

(NOTE: The center line symbol can also be used. It is best to use an irregular curve when drawing these lines.)

J. Circuit wires, conduit, or cable runs are normally not indicated on residential electrical plans, but are used on commercial structures

K. Receptacle shall be placed on each side and within 3 to 4' from the center line of probable bed locations

L. One heavy duty, special purpose receptacle should be in each room if room air conditioners are recommended

M. A vapor proof luminaire should be installed in an enclosed shower stall

N. No cables other than low voltage shall have conductors smaller than #14 copper or #12 aluminum when used in residential wiring

O. Provide ceiling outlet in line with front edge of bath lavatory

P. Provide one receptacle near mirror in bath a minimum of 2' from water

Q. Provide one receptacle for each 4 linear feet of work surface frontage in kitchen

R. Place each receptacle on separate circuits in kitchen

S. Lighting fixtures below wall cabinets may have local switch control

T. Special purpose receptacles must be provided for dining, utility, and kitchen areas

U. Provide one lighting outlet for each closet where conditions make lighting necessary

V. Provide one receptacle for each 15 linear feet of hallway

W. Wall or ceiling outlets shall be installed to provide illumination of each stair flight

X. Provide lighting with wall switch for attic space

Y. Provide one receptacle in garage ceiling for door opener

IX. Electrical floor plan symbols (Transparency 11)

A. Single pole switch-- S

B. Three way switch-- S_3

C. Four way switch-- S_4

INFORMATION SHEET

D. Automatic door jamb switch-- S_J

E. Dimmer switch-- S_D

F. Switch with pilot light-- Sp

G. Weatherproof switch-- Swp

H. Double pole switch-- S_2

I. Switch for low voltage system-- S

J. Low voltage wire-- ——— – – ——— – – ———

K. Low voltage master switch-- Ms

L. Relay equipped lighting outlet-- R

M. Duplex receptacle outlet--

N. Receptacle outlet other than duplex-- m

O. Split wired receptacle outlet--

(NOTE: Black indicates top receptacle outlet is hot at all times.)

P. Grounding type duplex receptacle outlet-- GR

Q. Weatherproof duplex outlet-- WP

R. Weatherproof grounding type duplex receptacle outlet-- GR WP

S. Range outlet-- R

T. 220 volt outlet-- 220

U. Special--Must be explained in the key to the symbols--

V. Junction box-- J

W. Lighting outlet--

X. Square recessed light (size varies)--

Y. Rectangular recessed light (size varies)--

Z. Round recessed light (size varies)--

AA. Fluorescent light-

BB. Lampholder-- L

INFORMATION SHEET

CC. Lampholder with pull switch-- (L) PS

(NOTE: Check local code.)

DD. Fan outlet-- (F)

EE. Clock outlet-- (C)

FF. Chime-- CH

GG. Bell--

HH. Buzzer--

II. Push button--

JJ. Electric door opener-- D

KK. Telephone--

LL. T.V. antenna outlet-- TV

MM. Master power service panel--

NN. Lighting distribution panel--

X. Overcurrent circuit safety devices

A. Fuse

B. Circuit breaker

C. Ground-fault circuit interrupter

Three Formulas from Ohm's Law

W =

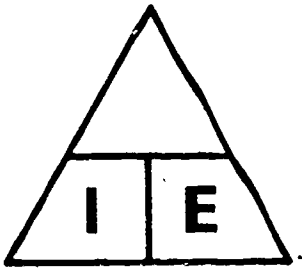

or W = I x E

or Watts = Amps x Volts

I =

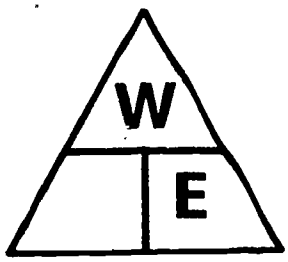

or I = W/E

or Amps = Watts ÷ Volts

E =

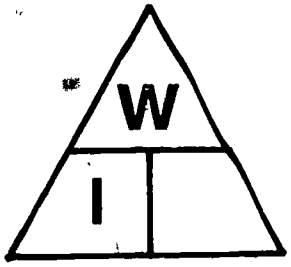

or E = W/I

or Volts = Watts ÷ Amps

Service Entrance Installation

According to NEC

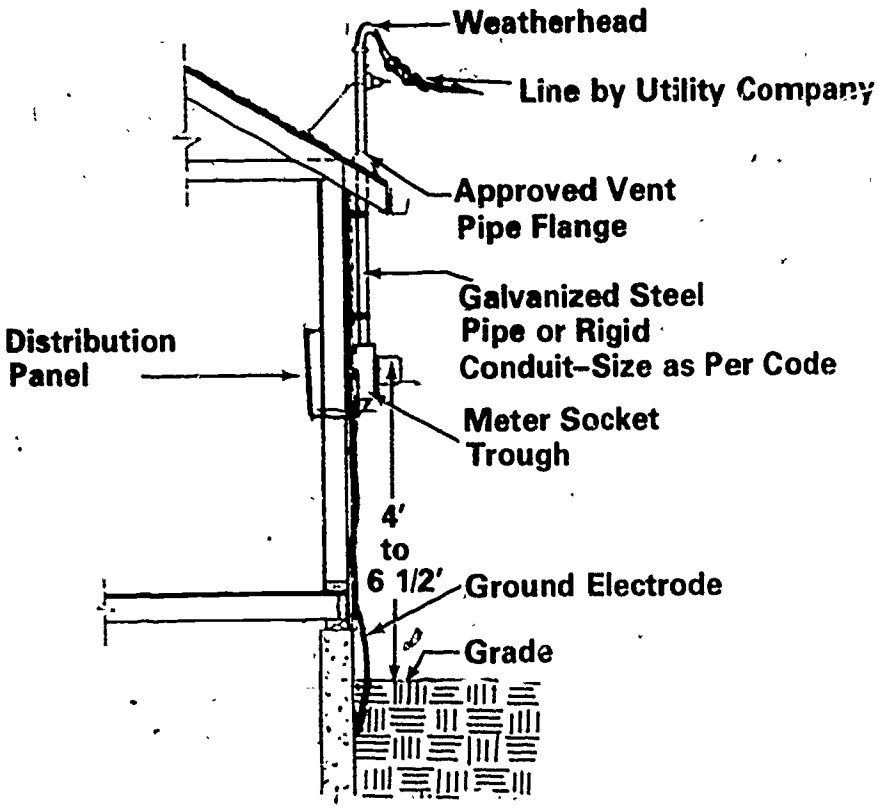

Above Ground Service

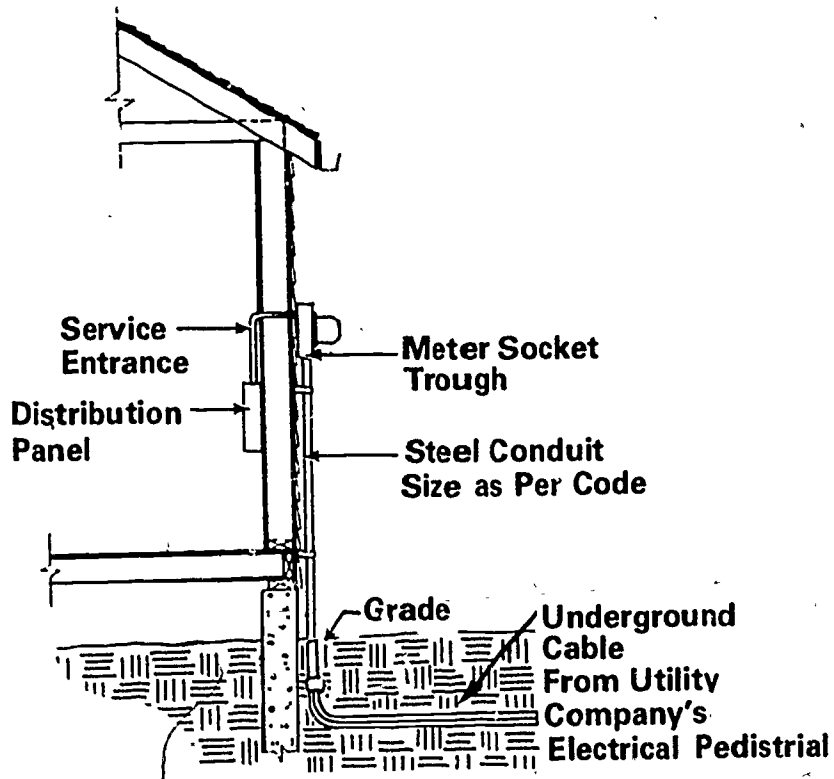

Underground Service

Typical Service Panel Arrangement

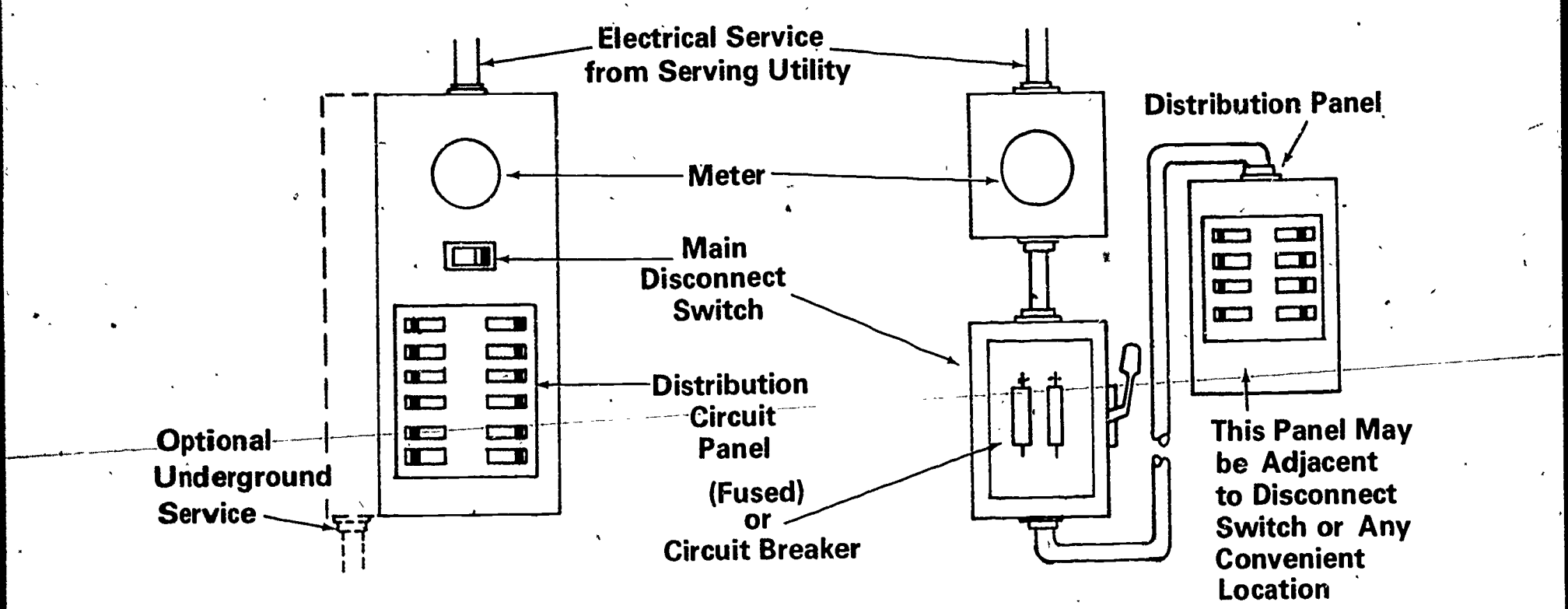

One-Piece

NOTE: This is commonly used in light commercial.

Built-Up System

NOTE: This is used for rural, mobile homes, or older residential buildings.

Typical Distribution Panel Schematic

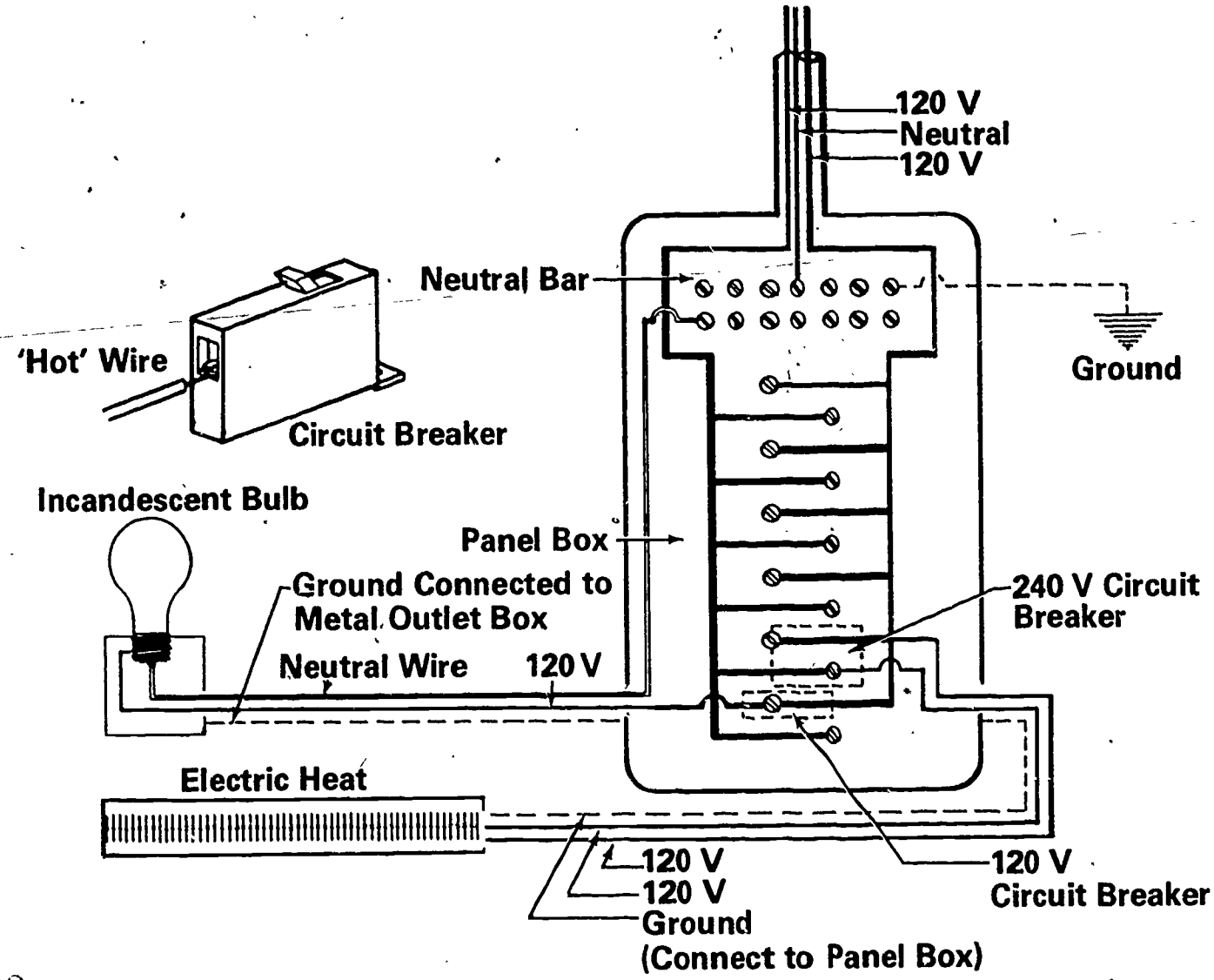

Wiring Devices

Nonmetallic Sheathed Cable

NOTE: This is commonly called romex.

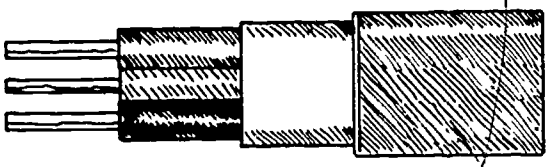

NM Cable

Staple

Connector

Concealed Knob and Tube

Insulated Conductor

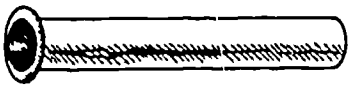

Porcelain Tube

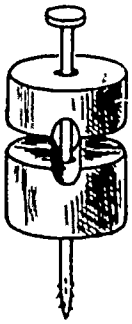

Knob

Braided Loom

Wiring Devices

(Continued)

Rigid Metal Conduit

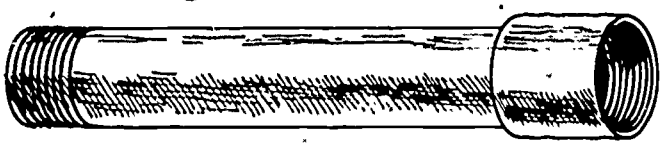

Metal Conduit and Coupling

One-Hole Strap

Conduit Body

Electrical Metallic Conduit

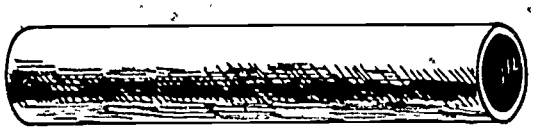

Electrical Metallic Conduit

One-Hole Strap

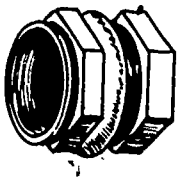

EMT Coupling

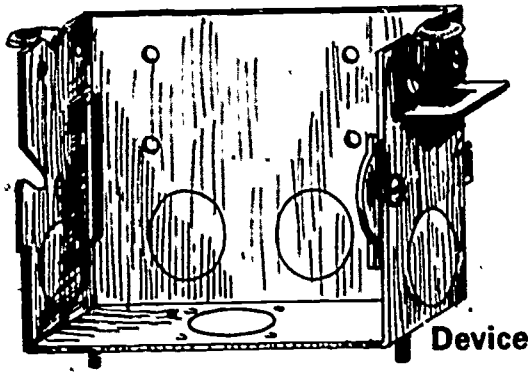

Device Box for Conduit

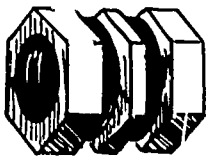

EMT Connector

Wiring Devices

(Continued)

Flexible Metal Conduit

NOTE: This is commonly called greenfield.

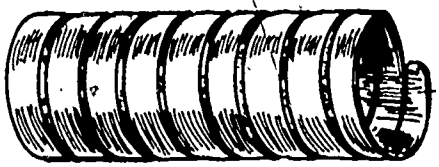

Flexible Metal Conduit

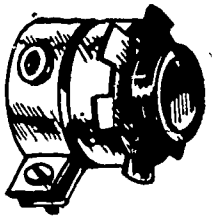

Straight Connector

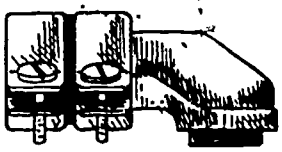

90° Connector

Liquid-Tight Flexible Metal Conduit

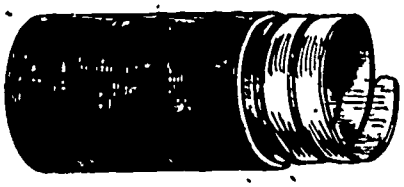

Liquid-Tight Flexible Metal Conduit

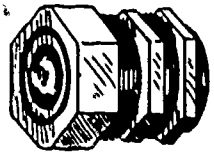

Liquid Tight Connector

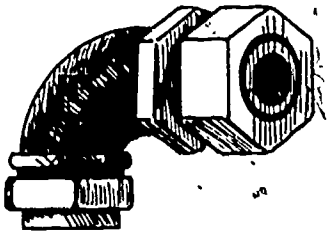

90° Liquid Tight Connector

Wiring Devices
(Continued)
Surface Raceways

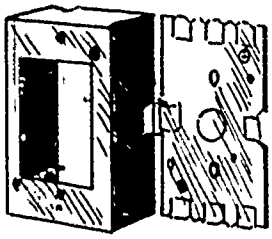

Surface Device Box

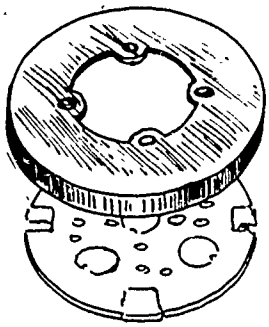

Surface Lighting Outlet

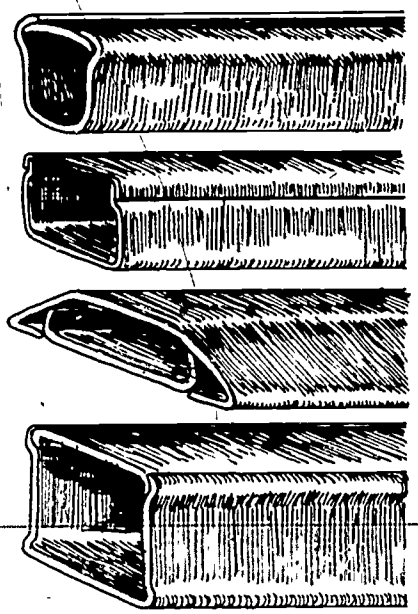

Surface Raceways

Low Voltage

Low Voltage Cable

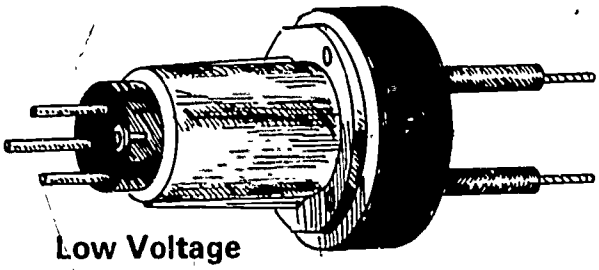

Low Voltage Controlled Lighting Relay

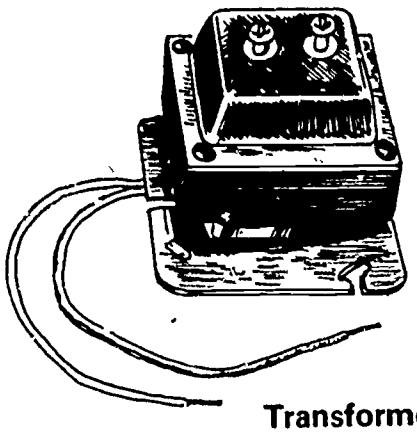

Transformer

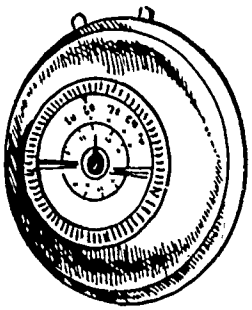

Thermostat

Wiring Devices
(Continued)

PVC (Polyvinyl Chloride)

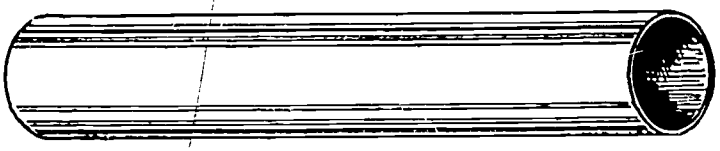

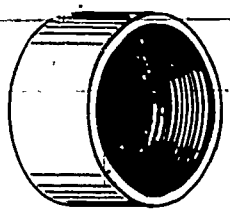

PVC to Threaded Adapter
(Female)

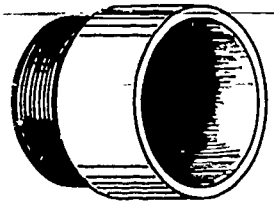

PVC to Threaded Adapter
(Male)

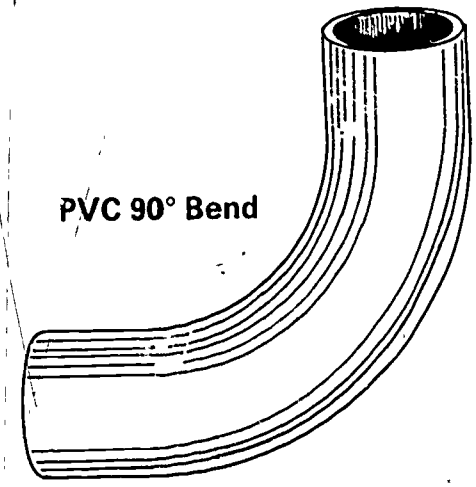

PVC 90° Bend

Low Voltage System

Remote Control for Line Voltage

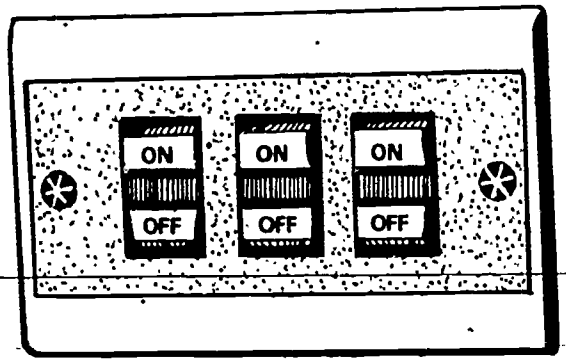

Push-Button Switch

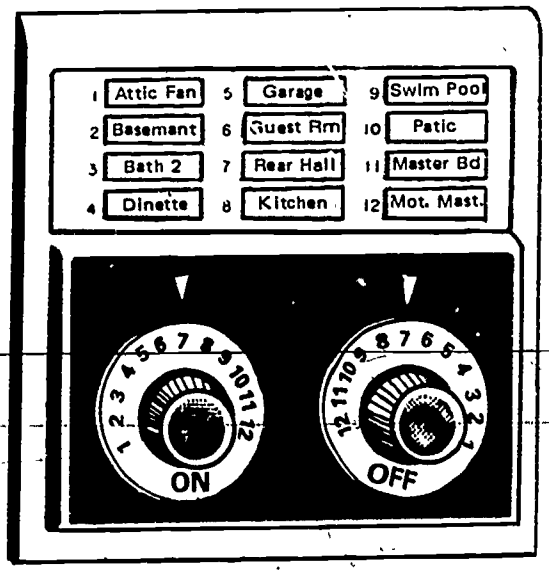

Master Selector Switch

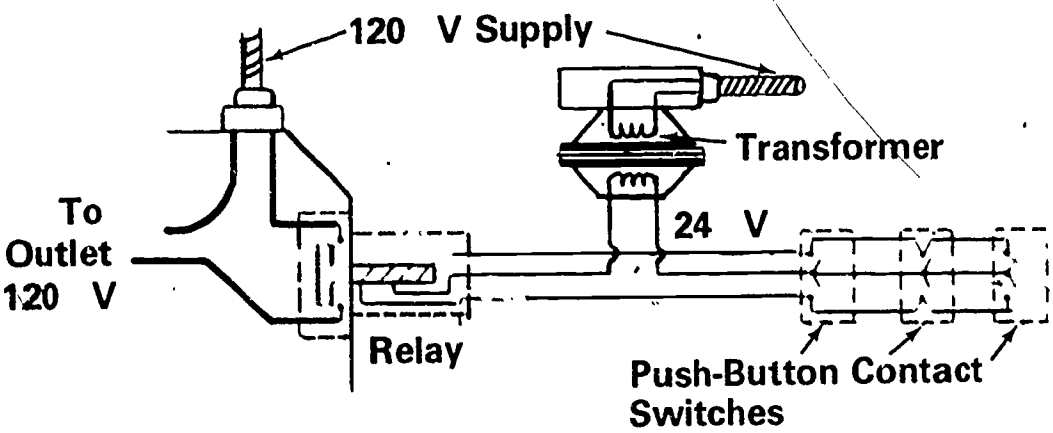

Control Circuit

Electrical Floor Plan

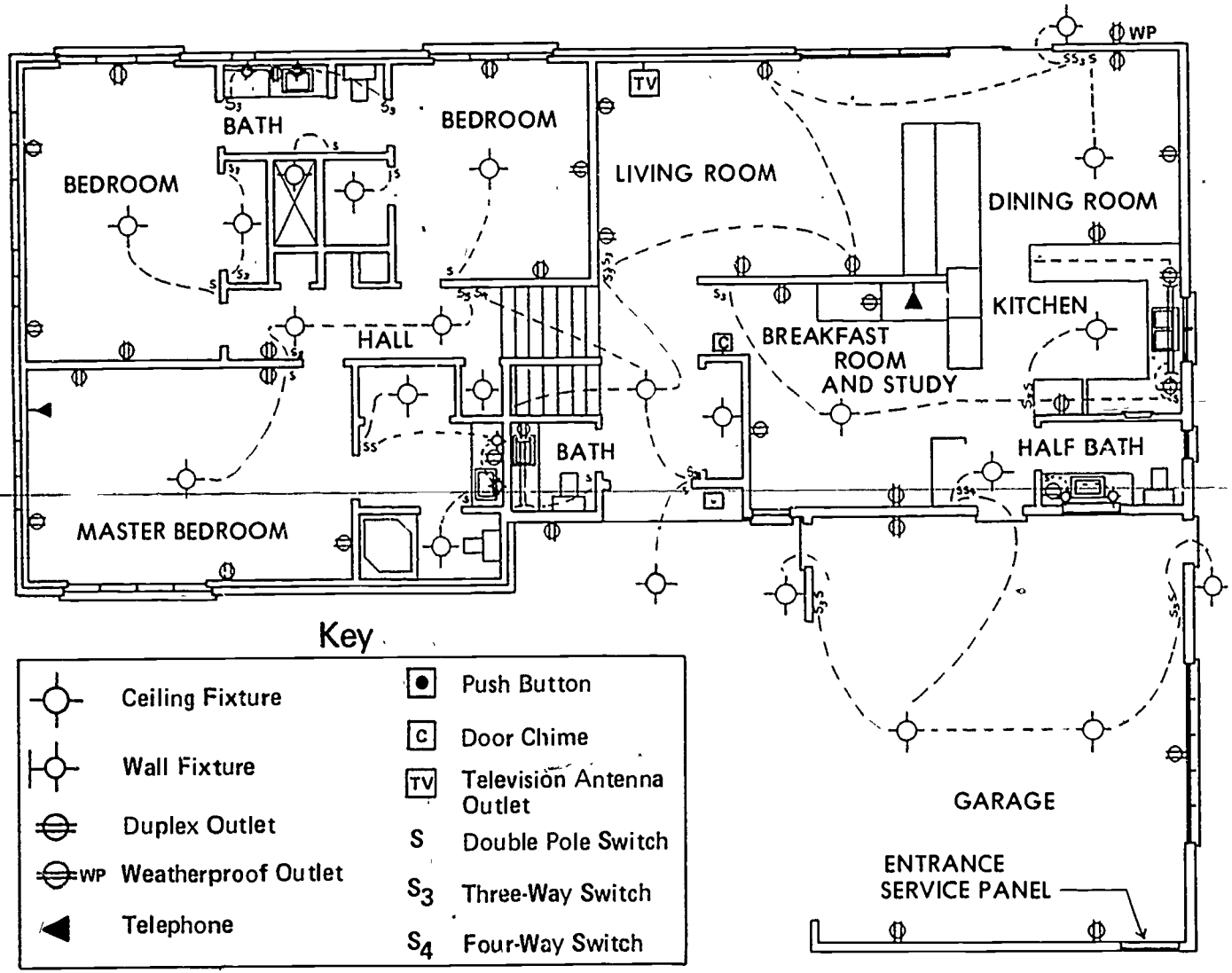

ELECTRICAL
UNIT XII

ASSIGNMENT SHEET #1--ANSWER QUESTIONS RELATED TO RESIDENTIAL WIRING PRACTICES USING THE NEC

Directions: Give article number and answer to the following problems. Steps used in the cross reference system are listed in the procedure below.

Procedure:

1. Locate topics in the index

   (NOTE: The index is in the back of the Code just before the appendix and is alphabetically arranged.)

2. Note article and section of topic

3. Find article listed in numerical order in the table of contents in the front of the Code

4. Locate appropriate article and read across to find page number

   (NOTE: Page numbers do not appear with the number "70" in them in the table of contents, but they will in the book proper.)

5. Turn to page listed as chapter beginning

6. Find section number needed in article

Example: Are ground-fault circuit interrupters required on 20 amp construction receptacles?

Step 1. Refer to index--"Ground-Fault Interrupters" is located and "Construction Sites" is listed

Step 2. Note listing of article

Step 3. Turn to table of contents and locate article number

Step 4. Read across to page number

Step 5. Find the page number for the article on branch circuits; turn to it

Step 6. Find section number by turning pages in article

Answer: From the article on branch circuits, 20 amp receptacles on temporary poles do require ground-fault circuit interrupters.

Problems:

A. Do boxes made of metal need to be corrosion resistant?

Answer:

ASSIGNMENT SHEET #1

B. What is the definition of "weatherproof"?

Answer:

C. Can a branch circuit used for lighting purposes and rated at 20 amps have a 12 amp dishwasher or other fixed appliance connected to it?

Answer:

ELECTRICAL
UNIT XII

ASSIGNMENT SHEET #2--INTERPRET CONDUIT FILL TABLES USING THE NEC

Directions: List the maximum number of conductors allowed in the following conduits. Use same procedure as listed on Assignment Sheet #1 to locate answers.

Problems:

A. 1/2" conduit

1. 14 TW _____
2. 10 TW _____
3. 6 TW _____

B. 3/4" conduit

1. 10 THWN _____
2. 4 THWN _____

C. 1" conduit

1. 6 TW _____
2. 2 TW _____
3. 6 THWN _____

D. 2" conduit

1. 4/0 THWN _____
2. 4/9 TW _____

ELECTRICAL
UNIT XII

ASSIGNMENT SHEET #3--LOCATE ALLOWABLE AMPACITIES FOR VARIOUS CONDUCTORS USING THE NEC

Directions: List the various ampacities for the conductors as listed.

Example: List the ampacities for the following conductors when used in a 3 conductor cable.

1. #12 TW copper _____
2. #6 TW copper _____

Answers: 1. 20 amps

2. 55 amps

Problems:

A. What is the allowable ampacity for the following single insulate copper conductors used in free air?

1. 14 TW _____
2. 1 TW _____
3. 1 THWN _____
4. 10 THW _____

B. What is the allowable ampacity for the following aluminum conductors when used in a 3 wire cable?

1. 10 TW _____
2. 12 TW _____
3. 1/0 TW _____
4. 6 TW _____

ELECTRICAL
UNIT XII

ASSIGNMENT SHEET #4--CALCULATE SERVICE SIZE AND MINIMUM NUMBER OF CIRCUITS

Directions: Using the standard code procedure listed below, calculate service size and minimum number of circuits on the following dwelling by filling in the blanks.

(NOTE: The NEC gives an example of this problem in the chapter entitled "Tables and Examples.")

Problem: Dwelling has a floor space of 2,100 square feet. It also has an 11 kw electric range.

Computed Load:

General lighting load
1. _____ sq. ft. X 3 watts per sq. ft. = 2 _____ watts

Minimum Number of Branch Circuits:
General lighting load: 3 _____ ÷ 115 = 4 _____ amperes ÷ 20 =
5. _____ or number of general lighting circuits

(NOTE: This number always rounds to next whole number if a fraction appears.)

Small appliance load: Two 2-wire 20 ampere circuits
Laundry load: One 2-wire 20 ampere circuit

(NOTE: See Code for wattage.)

Minimum Size Feeders Required:
Computed load
General lighting..... 6. _____ watts
Small appliance..... +3,000 watts
Laundry ..... +1,500 watts
Total (without range) ..... 7. _____ watts

3,000 watts at 100% ..... 3,000 watts
8. _____ - 3,000 = _____ watts X 35% = 9. + _____ watts
(Total w/o range)
Net computed load (without range) ..... 10. + _____ watts

Range load ..... +8,000 watts
Net computed load (with range) ..... 11. _____ watts

For 115/230 volt 2-wire system feeders, net computed load (with range) 12. _____ ÷ 230 = 13. _____ amperes

Net computed load exceeds 10 kw so service conductors shall be 100 amperes.

Reduced size neutral shall be permitted, usually two trade sizes smaller than the ungrounded conductors.

ASSIGNMENT SHEET #4

Feeder and Service Neutral

Lighting and small appliance load (net without range) . . . . . 14._____ watts

Range load 8,000 watts at 70% . . . . . +5,600 watts

Total . . . . . 15._____ watts

Total 16._____ ÷ 230 = 17._____ amperes
(Same as 15)

ELECTRICAL
UNIT XII

ASSIGNMENT SHEET #5--LOCATE RECEPTACLE, SWITCH, AND LIGHTING OUTLETS

Problem A: Using appropriate electrical symbols, locate the minimum required receptacle outlets along the cabinet spaces on the print below.

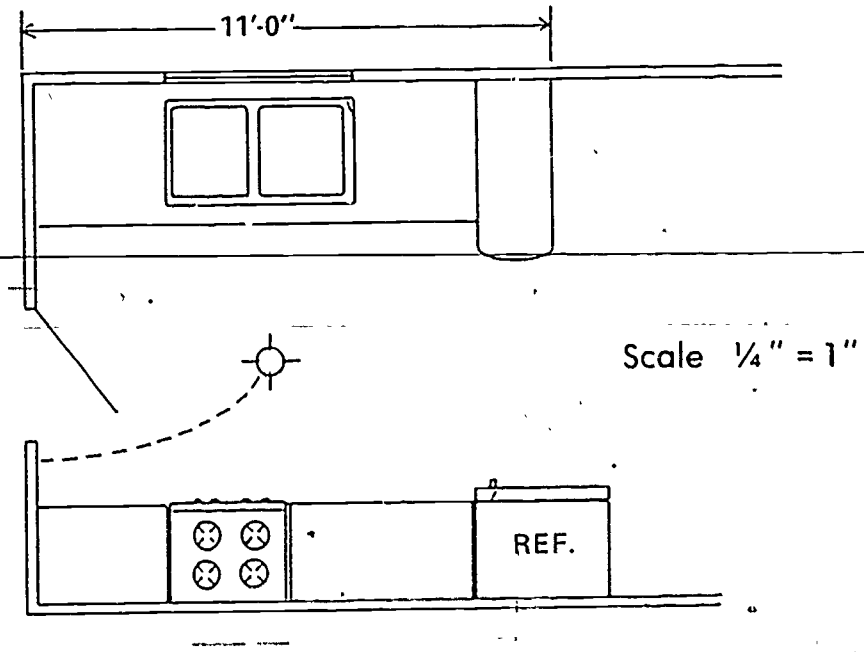

ASSIGNMENT SHEET #5

Problem B: Using appropriate electrical symbols, locate the minimum required premise wiring system, receptacles, switches, lighting outlets, telephone outlets, and bell-buzzer outlets along the floor and ceiling on the following floor plan.

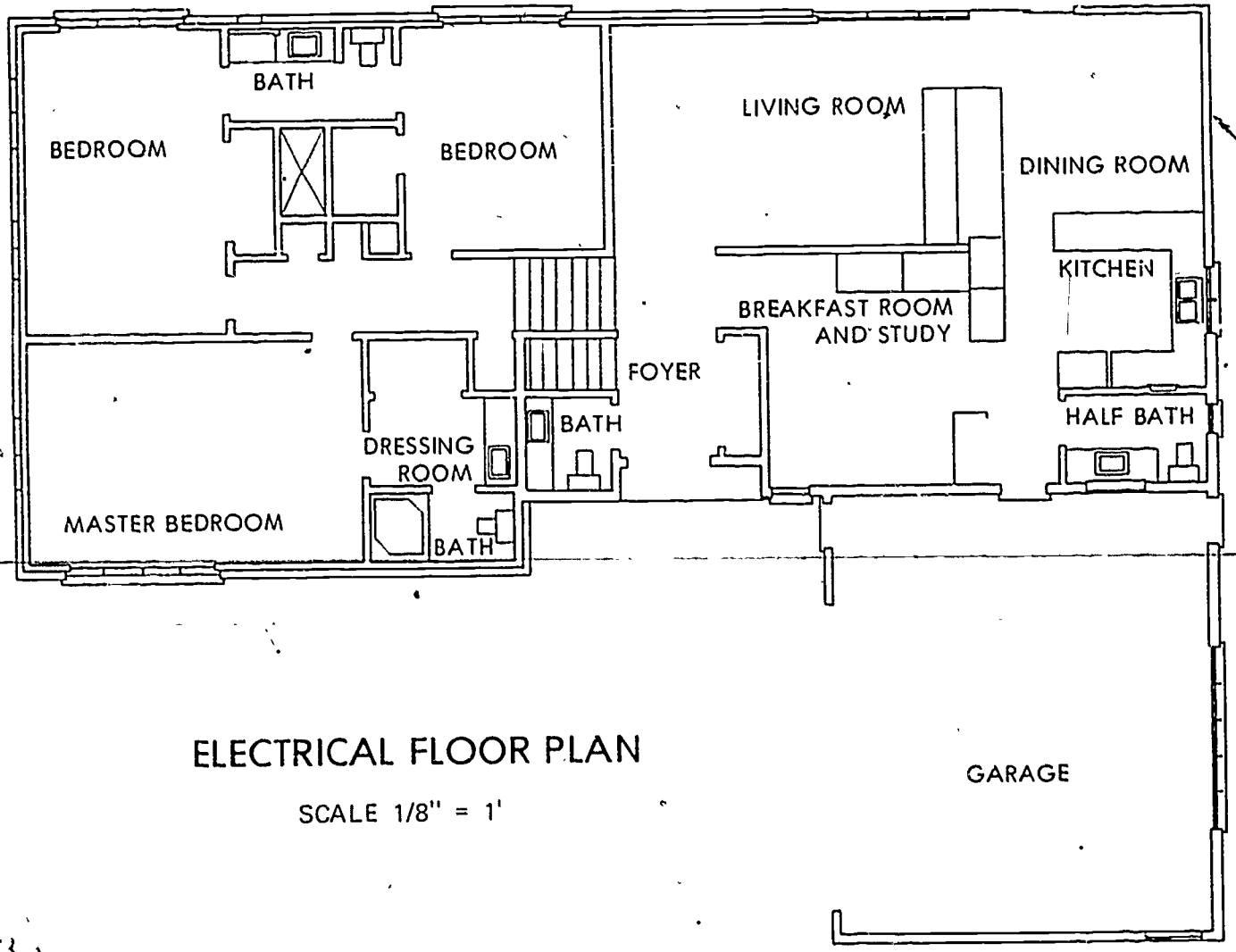

ELECTRICAL FLOOR PLAN

SCALE 1/8" = 1'

635

ELECTRICAL
UNIT XII

NAME _____

TEST

1. Match the terms on the right with the correct definitions.

(NOTE: The terms on this page should be matched to the definitions on this page; the same procedure applies on the next page.)

_____a. A basic minimum standard covering the installation of electrical equipment to safeguard persons and property

_____b. Unit of measure of electrical power

_____c. One thousand watts

_____d. Unit of measure of electrical pressure

_____e. Unit of measure of the intensity of the flow or current of electricity

_____f. Unit of measure of the resistance to the flow of electricity

_____g. A law which can be used for calculating wattage, voltage, and amperage for circuits

_____h. Current-carrying capacity of electric conductors expressed in amperes

_____i. Material which does not permit the free flow of electrons

_____j. Material which permits the free flow of electrons

_____k. A conductor having no covering or electrical insulation

_____l. A conductor encased with a material not recognized by the NEC as insulation

_____m. A conductor encased with a material recognized by the NEC as insulation

_____n. A circuit conductor that is intentionally connected to the earth or some conductor that serves in place of the earth

_____o. Connects equipment or wiring circuit grounded conductor to a grounding electrode

1. Ohm
2. Insulator
3. Conductor
4. Ampere
5. Insulated conductor
6. Ampacity
7. Grounded conductor
8. Ohm's Law
9. National Electric Code
10. Grounding conductor
11. Covered conductor
12. Watt
13. Kilowatt
14. Volt
15. Bare conductor

_____p. A complete path for current to flow from the source through the load and back to the source

_____q. The circuit conductors between the final overcurrent device protecting the circuit and the outlet(s)

_____r. A switching device that automatically opens a circuit when the circuit has been overloaded

_____s. A wire connecting the circuit or equipment to the earth or water pipes to minimize injuries from shock

_____t. A device that is sensitive to very low levels of current leakage to ground

_____u. Overcurrent protective device with a circuit opening fusible part that is heated and severed by the passage of overcurrent through it

_____v. Contact device installed at the outlet for the connection of a single attachment plug

_____w. A point on the wiring system at which current is taken to supply utilization equipment

_____x. An outlet where one or more receptacles are installed

_____y. The electrical enclosure that contains the overcurrent protection for circuits and connects to the service conductor

_____z. The conductors from utility pole and service head which bring the current to the building through the meter to the distribution panel

_____aa. The overhead service conductors from the last pole or other aerial support to and including the splices, if any, connecting to the service entrance conductors at the building or other structure

_____bb. Wiring of less than 50 volts originating at a transformer

_____cc. A metal-encased box that is placed on the floor prior to placement of concrete floor to allow for various outlets

16. Distribution panel
17. Raceway
18. Circuit breaker
19. Outlet
20. Receptacle outlet
21. Ground wire
22. Service drop
23. Low voltage
24. Fuse
25. Branch circuit
26. Circuit
27. Ground-fault circuit interrupter
28. Receptacle
29. Service entrance

_____dd. A preassembled metal box system used to distribute high-current loads

_____ee. A channel or pipe, made of metal or plastic, in which conductors are run

_____ff. Thin wall metal raceway of circular cross sections with integral or associated couplings, connectors, and fittings approved for the installation of electrical conductors

_____gg. Spiral metal raceway designed for flexible installation with a circular cross section and integral or associated couplings, connectors, and fittings approved for the installation of electrical conductors

_____hh. Flexible metal conduit with an outer liquid-tight, nonmetallic, sunlight-resistant jacket

_____ii. Similar to electrical metal tubing except that the pipe is heavier and is threaded

_____jj. Two or more wires enclosed in a flexible plastic case

_____kk. A flexible armor-shielded cable that has two or more conductors within the casing

_____ll. Wiring method using knobs, tubes, and flexible nonmetallic tubing for protection and support of single insulated conductors in walls and ceilings of buildings

____mm. A standard size classification for copper and aluminum wires up to 0000

_____nn. The standard size classification for conductors larger than 0000

30. Busway
31. Liquid-tight flexible metal conduit
32. Thousand circular mils
33. Knob and tube wiring
34. Electrical metal tubing
35. Rigid conduit
36. Nonmetallic sheathed cable
37. Interlocked armor cable
38. Flexible metal conduit
39. Conduit
40. American wire gauge

2. Distinguish between types of lighting dispersement by placing an "X" next to the illustration of indirect lighting dispersement.

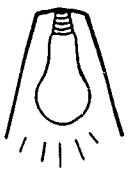

a. _____ b. _____ c. _____

3. Name four parts of electrical service entrance installation.

   a. _____

   b. _____

   c. _____

   d. _____

4. Distinguish between types of residential branch circuits by placing an "X" next to the description of a special purpose individual circuit.

   _____a. 15 or 20 amp circuit used for lighting and small appliances

   _____b. 20 amp circuit used for one or more outlets to which appliances are to be connected

   _____c. 115/120 volt or 208/240 volt circuit used for one single outlet

5. Match the wiring devices on the right with common residential applications.

_____a. General residential rough-in; circuit extensions in existing building; direct burial for yard lights or extensions	1. Rigid metal conduit
_____b. Extensions of existing installations; elsewhere by special permission	2. Low voltage
_____c. Through eave service masts to weatherhead; underground circuit extension; in concrete walls, floors, or ceilings; underground service riser	3. Cable
_____d. Service raceway; protecting grounding conductor	4. Concealed knob and tube wiring
_____e. Connecting recessed lighting fixtures; enclosing motor leads	5. Electrical metallic tubing
_____f. Connecting air conditioning condensers to disconnects; enclosing motor leads needing protection from liquids and vapors	6. Raceways
_____g. Interior circuit extensions where concealed work is not necessary or is not possible; on interior concrete surfaces	7. Flexible metal conduit
_____h. Chime circuits; intercom wiring; thermostat circuits; lighting remote control; smoke detectors; burglar-alarms	8. Liquid-tight flexible metal conduit
_____i. In locations subject to severe corrosive conditions; in portions of dairies, laundries, canneries, or other wet locations	9. Rigid nonmetallic conduit or PVC

6. Match the types of cables on the right with common applications.

_____a. Residential rough-in wiring in new construction; extensions of existing residential wiring and new remodel; feeders for sub-panels

_____b. Service entrance conductors if used with rain tight head; branch circuits for ranges, cook tops, or clothes dryers

_____c. Thermostat control circuits; bell or chime control circuits; low voltage lighting control circuits

_____d. Underground circuits to remote lighting such as yard lights; branch circuits to out buildings such as garages

_____e. Underground service supply

1. Underground cable
2. Service entrance cable
3. Nonmetallic sheathed cable
4. Underground service entrance cable
5. Low voltage cable

7. State the conductor letter designations for the following installation conditions.

_____a. Dry locations

_____b. Dry and wet locations

_____c. Dry and wet locations where more heat resistant qualities are needed

_____d. Dry and wet locations where oil may be present or where more heat resistant qualities are needed

8. Select true statements concerning designing an electrical system for a residence by placing an "X" in the appropriate blanks.

_____a. A three-way switch is used to control a light from three locations

_____b. Switch locations should be placed so that a person can enter the house from any door and progress to any other part without being in the dark

_____c. Receptacle shall be placed so that no point on any usable wall space along the floor line is more 12" from an outlet

_____d. Split-receptacle outlets should be used in living and dining areas in order not to limit the use of radios, clocks, or appliances

_____e. Provide one receptacle near mirror in bath a minimum of 2' from water

_____f. Provide one receptacle for each 10 linear feet of work surface frontage in kitchen

_____g. Provide lighting with wall switch for attic space

9. Match electrical floor plan symbols on the right with the correct names.

_____a. Single pole switch

_____b. Three way switch

_____c. Weatherproof switch

_____d. Low voltage wire

_____e. Duplex receptacle outlet

_____f. Split wired receptacle outlet

_____g. Range outlet

_____h. 220 volt outlet

_____i. Junction box

_____j. Lighting outlet

_____k. Round recessed light

_____l. Fluorescent light

_____m. Telephone

_____n. T.V. antenna outlet

1. 
2. 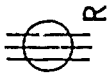

3. Swp
4. 
5. S_3
6. 
7. 
8. S
9. TV
10. 
11. 

12. 
13. 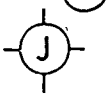

14. 

10. Name two overcurrent circuit safety devices.

a. _____

b. _____

11. Demonstrate the ability to:

a. Answer questions related to residential wiring practices using the NEC.

b. Interpret conduit fill tables using the NEC.

c. Locate allowable ampacities for various conductors using the NEC.

d. Calculate service size and minimum number of circuits.

e. Locate receptacle, switch, and lighting outlets.

(NOTE: If these activities have not been accomplished prior to the test, ask your instructor when they should be completed.)

ELECTRICAL
UNIT XII

ANSWERS TO TEST

1.

a.	9	k.	15	u.	24	ee.	39
b.	12	l.	11	v.	28	ff.	34
c.	13	m.	5	w.	19	gg.	38
d.	14	n.	7	x.	20	hh.	31
e.	4	o.	10	y.	16	ii.	35
f.	1	p.	26	z.	29	jj.	36
g.	8	q.	25	aa.	22	kk.	37
h.	6	r.	18	bb.	23	ll.	33
i.	2	s.	21	cc.	17	mm.	40
j.	3	t.	27	dd.	30	nn.	32

2. b

3. Any four of the following:
   a. Electrical service line
   b. Meter socket trough
   c. Main disconnect switch
   d. Distribution panel
   e. Weatherhead assembly

4. c

5.

a.	3	f.	8
b.	4	g.	6
c.	1	h.	2
d.	5	i.	9
e.	7		

6.

a.	3	d.	1
b.	2	e.	4
c.	5		

7. a. T
   b. TW
   c. THW
   d. MTW

8. b, d, e, g

9.

a.	8	f.	7	k.	11
b.	5	g.	2	l.	4
c.	3	h.	12	m.	1
d.	14	i.	13	n.	9
e.	10	j.	6		

10. Any two of the following:
    a. Fuse
    b. Circuit breaker
    c. Ground-fault circuit interrupter

11. Evaluated to the satisfaction of the instructor

SPECIFICATIONS
UNIT XIII

UNIT OBJECTIVE

After completion of this unit, the student should be able to state purposes of specifications and fill-in a VA-FHA "Description of Materials" form. This knowledge will be evidenced by correctly performing the procedures outlined in the assignment sheets and by scoring 85 percent on the unit test.

SPECIFIC OBJECTIVES

After completion of this unit, the student should be able to:

1. Match terms related to specifications with the correct definitions.
2. State two purposes of specifications.
3. Complete statements concerning information included in specifications.
4. Select true statements concerning characteristics of specifications.
5. List errors to be aware of in specifications.
6. Demonstrate the ability to:
   a. Answer questions related to materials used in residential construction using *Sweet's Catalog File.*
   b. Fill in a VA-FHA "Description of Materials" form.

SPECIFICATIONS
UNIT XIII

SUGGESTED ACTIVITIES

I. Provide student with objective sheet.

II. Provide student with information and assignment sheets.

III. Discuss unit and specific objectives.

VI. Discuss information and assignment sheets.

V. Obtain copies of different types of specifications and discuss each.

VI. Discuss specification forms which are used locally.

VII. Have *Sweet's Catalog File* available for students to use in Assignment Sheet #1.

VIII. Obtain copies of the "Description of Materials" form from a VA, FHA, or Farmers Home Administration office for use in Assignment Sheet #2.

IX. Have students fill out a specifications form other than the one in Assignment Sheet #2 as an optional activity.

X. Give test.

INSTRUCTIONAL MATERIALS

I. Included in this unit:

A. Objective sheet

B. Information sheet

C. Assignment sheets

1. Assignment Sheet #1--Answer Questions Related to Materials Used in Residential Construction Using *Sweet's Catalog File*

2. Assignment Sheet #2--Fill In a VA-FHA "Description of Materials" Form

D. Test

E. Answers to test

II. References:

A. Hepler, Donald E. and Paul I. Wallach. *Architecture Drafting and Design.* St. Louis: Gregg Division/McGraw-Hill Book Co., 1977.

B. Hornung, William J. *Architectural Drafting.* Englewood Cliffs, NJ: Prentice-Hall, Inc., 1966.

C. Obermeyer, Thomas. *Architectural Technology.* St. Louis: Gregg Division/McGraw-Hill Book Co., 1976.

D. Spence, William P. *Architecture Design - Engineering - Drawing.* Bloomington, IL: McKnight Publishing Co., 1979.

E. Stegman, George K. and Harry J. Stegman. *Architectural Drafting.* Chicago 60637: American Technical Society, 1974.

F. *Sweet's Catalog File.* New York 10020: McGraw-Hill Information Systems, 1977.

G. Kicklighter, Clois E. *Architecture: Residential Drawing and Design.* South Holland, IL: Goodheart-Willcox Co., Inc., 1973.

SPECIFICATIONS
UNIT XIII

INFORMATION SHEET

I. Terms and definitions

A. Specifications (specs)--Written instructions describing the basic requirements for constructing a building

(NOTE: Materials are noted and sometimes detailed on drawings and are called out in specifications. Specifications are sometimes referred to as a "Project Manual.")

B. Shop drawings--Drawings made by the manufacturer of an item which show how the product is to be installed

C. Change order--Document signed by the architect, owner, and contractor which legally changes the contract documents in scope of time, work, and/or cost

D. Punch list--List of items to be completed or repaired by the contractor before the owner takes control of the building

E. Shall--Term used in writing specifications to express what is mandatory (what must be done)

F. Equal (or similar)--Term applied when a substitute can be used

(NOTE: If a contractor cannot substitute items, the architect will indicate that "no substitutions" may be made.)

G. Litigation--To carry on a legal contest through judicial process

H. General contractor--Independent contractor who signs a contract to perform more than 15% of the work with his own work force

I. Subcontractor--An individual or business firm contracting to perform part of another contract

J. Construction contract--Document which contains signed agreement between owner and contractor, specifications (technical and general), and drawings (shop drawings and working drawings)

K. General conditions--Usually first section in specs which defines the relationship and responsibilities among the agreeing parties

L. Fill-in form--Form used for residences which follows a format of blanks to be completed

INFORMATION SHEET

II. Purposes of specifications

A. Act as a legal document when used in conjunction with the set of drawings

(NOTE: This may be used in court as binding evidence if litigation should become necessary.)

B. Communicate to contractor (or bidder)

III. Information included in specifications

A. Description of materials to be used

Examples: Size, quality, brand names (if desired), style

B. Required building operations

(NOTE: These are usually described under major headings such as excavation, masonry, carpentry, plumbing, etc.)

C. Cash allowance notes for such items as lighting fixtures and hardware which are to be selected by the owner

(NOTE: Expenditures over the cash allowance must be paid by the owner.)

D. An indication that all specifications refer to the detailed plans of the working drawings

E. Statement or agreement on quality of workmanship

(NOTE: This is often drawn up as a separate part of the contract.)

F. Liability covered by the contractor during construction

IV. Characteristics of specifications

A. All drawings indicate quantity (size and shape); specifications indicate quality (colors, finishes, fabrication, and kinds of materials)

B. Specifications supplement the drawings and become part of the complete set of building plans

C. When the house is to be constructed for sale, the architect supplies the specifications

D. When the house is being constructed for a particular client, the architect and client usually develop a "specification outline" together

1. Architect decides on structural materials

2. Client decides on items involving personal taste

Example: Paint colors, floor coverings, wallpaper

INFORMATION SHEET

E. Various forms for developing specifications (long or short) are available

(NOTE: The VA-FHA form used in Assignment Sheet #2 has become one of the leading guides for writing specifications.)

F. Who writes the specifications depends upon the size of the architectural firm

1. Large firms employ specification writers who devote their time to writing specs

2. In small firms the architect is responsible for writing specs

G. The more complete the specifications, the less chance for disagreement or misunderstanding between the owner and the contractor as to exactly what is to be done

H. Brand names should not be used for large projects because they eliminate competitive bidding

Example:

Instead of Brand Name	Use Descriptive Name
Formica	Plastic laminate
Masonite	Fiber board
Romex	Electrical cable
Thermopane	Insulating glass

I. Italics indicate a change made after a conference with estimator, contractor, client, and architect

J. Federal, state, and local codes and laws should be consulted and used as guidelines for writing specifications

V. Errors to be aware of in specifications

A. Difference between drawings and specifications

(NOTE: This is where most of the problems occur.)

B. Specification of materials is unclear

C. Ambiguous and unfair clauses

D. Omitted necessary clauses for owner's protection

(NOTE: If specs are in error or there is a question to content or interpretation, it should be cleared up immediately.)

SPECIFICATIONS
UNIT XIII

ASSIGNMENT SHEET #1--ANSWER QUESTIONS RELATED TO MATERIALS USED IN RESIDENTIAL CONSTRUCTION USING *SWEET'S CATALOG FILE*

Directions: Answer the following questions using the available *Sweet's Catalog File*.

(NOTE: Each catalog in *Sweet's* is identified by a separate catalog code to provide for retrieval of a catalog from the firms, products, or trade name indexes. The information used for the problems and problem solving steps listed in the example below were taken from the *Sweet's Catalog File* of 1977.)

Example: What is the material thickness of aluminum gutters?

Step 1: Refer to products index: "Alcoa Building Products--7.3/AL" is listed

Step 2: Locate catalog with numerical code 7.3/AL

Step 3: Turn pages until you see 7.3/AL in upper right hand of page

Step 4: Turn to page 3 and read in specifications the thickness of material

Answer: Gutters--.032" and .027"

Problems:

1. What is the size of a rough opening for a disappearing stairway that is available for a 10' ceiling height?

2. What are the rough opening dimensions for an Anderson C44 bow window?

3. What are the dimensions and weight of Certain-Teed self-sealing shingles?

SPECIFICATIONS
UNIT XIII

ASSIGNMENT SHEET #2--FILL IN A VA-FHA "DESCRIPTION OF MATERIALS" FORM

Directions: Fill in a VA-FHA "Description of Materials" form for a set of drawings provided by instructor or for your design project set of drawings. The following example is to be used as a guideline for filling in this form.

Example:

FHA Form 2005
VA Form 26-1852
Form FmHA 424-2
Rev. 4/77

U S DEPARTMENT OF HOUSING AND URBAN DEVELOPMENT
FEDERAL HOUSING ADMINISTRATION
For accurate register of carbon copies, form may be separated along above fold. Staple completed sheets together in original order

Form Approved
OMB No. 63-R0055

☐ Proposed Construction

☐ Under Construction

DESCRIPTION OF MATERIALS No. _____
(To be inserted by FHA, VA or FmHA)

Property address _____ City _____ State _____

Mortgagor or Sponsor _____ (Name) _____ (Address)

Contractor or Builder _____ (Name) _____ (Address)

INSTRUCTIONS

1. For additional information on how this form is to be submitted, number of copies, etc., see the instructions applicable to the FHA Application for Mortgage Insurance, VA Request for Determination of Reasonable Value, or FmHA Property Information and Appraisal Report, as the case may be.
2. Describe all materials and equipment to be used, whether or not shown on the drawings, by marking an X in each appropriate check-box and entering the information called for in each space. If space is inadequate, enter "See misc." and describe under item 27 or on an attached sheet. THE USE OF PAINT CONTAINING MORE THAN THE PERCENTAGE OF LEAD BY WEIGHT PERMITTED BY LAW IS PROHIBITED.
3. Work not specifically described or shown will not be considered unless required, then the minimum acceptable will be assumed. Work exceeding minimum requirements cannot be considered unless specifically described.
4. Include no alternates, "or equal" phrases, or contradictory items. (Consideration of a request for acceptance of substitute materials or equipment is not thereby precluded.)
5. Include signatures required at the end of this form.
6. The construction shall be completed in compliance with the related drawings and specifications, as amended during processing. The specifications include this Description of Materials and the applicable Minimum Property Standards.

1. EXCAVATION:

Bearing soil, type Clay Loam

2. FOUNDATIONS:

Footings concrete mix Ready Mix 6/9, strength psi 2500 Reinforcing #4 Rebar
Foundation wall material R.M. 6/9 size 6" Min. Reinforcing
Interior foundation wall material Conc. (See details) Party foundation wall
Columns, material and sizes See details 8 x 8 Piers material and reinforcing See foundation details
Girders material and sizes 4 x 8 Std. Util. Sills: material Redwood size 2 x 8
Basement entrance areaway See details on fdn. plan Window areaways
Waterproofing Footing drains Weep holes at 4:0 o.c.
Termite protection To comply with HUD MPS #815-3.6 Cloradane soil treatment 5 yr. guarantee
Basementless space ground cover _____, insulation _____, foundation vents 8 x 16 screen
Special foundations
Additional information

3. CHIMNEYS:

Material Prefabricated (make and size)
Flue lining material Heat · flue size Fireplace flue size
Vents (material and size) gas or oil heater _____, water heater
Additional information

4. FIREPLACES:

Type: ☒ solid fuel, ☐ gas-burning; ☐ circulator (make and size) _____ Ash dump and clean-out 4" x 8" Lid over 10" x 20" ash dump
Fireplace: facing Brick; lining Fire Brick, hearth Brick, mantel None
Additional information

ASSIGNMENT SHEET #2

5. EXTERIOR WALLS:

Wood frame wood grade, and species Std. - Util. , ☒ Corner bracing Building paper or felt 15# felt

Sheathing Insul. bd. , thickness 3/4" , width 4 0 , ☒ solid, ☐ spaced ____" o. c., ☐ diagonal.

Siding ____ , grade ____ , type ____ , size ____ , exposure ____", fastening ____

Shingles ____ grade ____ , type ____ , size ____ , exposure ____", fastening ____

Stucco ____ , thickness ____". Lath ____ , weight ____ lb.

Masonry veneer Finished brick Sills Brick Lintels 1/2 x 4 x 4 ∠ Base flashing ____

Masonry ☒ solid ☐ faced ☐ stuccoed, total wall thickness ____", facing thickness ____", facing material ____

Backup material Insul. bd. , thickness ____", bonding Metal wall ties

Door sills Oak Window sills Ash or W. Pine Lintels HUD-MPS Base flashing ____

Interior surfaces dampproofing ____ coats of ____ furring ____

Additional information ____

Exterior painting material Lead or oil base or acrylic #1 , number of coats 3

Gable wall construction ☐ same as main walls, ☒ other construction Fascia and soffit min. 3 coats

6. FLOOR FRAMING:

Joists wood, grade, and species Std. - Util. 2 x 8 , other ____ , bridging 2 x 4 solid , anchors 1/2" x 10"

Concrete slab ☐ basement floor, ☐ first floor, ☐ ground supported, ☐ self-supporting, mix ____ , thickness ____",

reinforcing ____ , insulation ____ , membrane ____

Fill under slab material ____ , thickness ____" Additional information ____

7. SUBFLOORING: *(Describe underflooring for special floors under item 21.)*

Material grade and species W. Pine Util. Diagonal or 1" solid sheathing , size 1 x 10 , type ____

Laid ☒ first floor, ☐ second floor, ☒ attic 100 sq. ft., ☒ diagonal, ☐ right angles Additional information ____

8. FINISH FLOORING: *(Wood only. Describe other finish flooring under item 21.)*

Location	Rooms	Grade	Species	Thickness	Width	Bldg Paper	Finish
First floor	Carpet except baths, kitchen, and utility room						
Second floor							
Attic floor	sq. ft.						

Additional information ____

FHA Form 2005
VA Form 26-1852
Form FmHA 424-2

DESCRIPTION OF MATERIALS

DESCRIPTION OF MATERIALS

9. PARTITION FRAMING:

Studs wood, grade, and species Std. - Util. size and spacing 2 x 4 16 O.C. Other ____

Additional information ____

10. CEILING FRAMING:

Joists wood, grade, and species Std. Util. 2" x 6" Other ____ Bridging ____

Additional information ____

11. ROOF FRAMING:

Rafters wood, grade, and species Std. - Util. 2 x 6 24" O.C. Roof trusses (see detail) grade and species ____

Additional information 2" x 8" collar beam

12. ROOFING:

Sheathing wood, grade, and species Std. - Util. 1" x 10" or 5/8" CD. Plywood , ☒ solid, ☐ spaced ____" o.c.

Roofing Composition , grade C , size 16 , type ____

Underlay 15# felt , weight or thickness 240# , size 16 , fastening nail & glue

Built-up roofing ____ , number of plies ____ , surfacing material ____

Flashing material Galv. , gage or weight 26 Gage , ☐ gravel stops, ☐ snow guards

Additional information ____

13. GUTTERS AND DOWNSPOUTS:

Gutters material Galv. , gage or weight 26 , size 4" , shape Molded hangers 4'-0" O.C.

Downspouts material Galv. , gage or weight 26 , size 2 x 4 shape rect. , number ____

Downspouts connected to ☐ Storm sewer, ☐ sanitary sewer, ☐ dry well ☒ Splash blocks material and size Conc. 12 x 30

Additional information ____

14. LATH AND PLASTER

Lath ☐ walls, ☐ ceilings material ____ , weight or thickness ____ Plaster coats ____ , finish ____

Dry-wall ☒ walls, ☒ ceilings material Sheetrock , thickness 1/2 , finish Smooth

Joint treatment Tape, bed, sand, and float per manu. spec's.

ASSIGNMENT SHEET #2

15. DECORATING: *(Paint, wallpaper, etc.)*

Rooms	Wall Finish Material and Application	Ceiling Finish Material and Application
Kitchen		All ceilings to have blown acoustical
Bath		No texture on furr down
Other	Paint all walls, ceilings, and furr downs	

Additional information

16. INTERIOR DOORS AND TRIM:

Doors type Slab hollow core material Ash thickness 1 3/8

Door trim type Std. material Pine Base type Std. material Pine, size 3/4 x 2 3/4

Finish doors Stained, sanded, sealed, and lacquered trim Same

Other trim (e.g., type and location)

Additional information

17. WINDOWS:

Windows type Single hung make , material Aluminum sash thickness 1"

Glass grade SBS , ☐ sash weights, ☒ balances type W/unit , head flashing

Trim type Return material Same as wall Paint Yes , number coats 3

Weatherstripping type W/unit material Storm sash, number All

Screens ☐ full ☒ half type number All screen cloth material Mesh

Basement windows type material , screens number , Storm sash, number

Special windows

Additional information

18. ENTRANCES AND EXTERIOR DETAIL:

Main entrance door material Fir , width 36" thickness 1 3/4" Frame material Fir , thickness 1 3/4"

Other entrance doors material Fir , width 32" thickness 1 3/4" Frame material Fir , thickness 1 3/4"

Head flashing Weatherstripping type Spring bronze saddles Oak

Screen doors thickness ' number , screen cloth material Storm doors thickness 1 ", number 2

Combination storm and screen doors thickness ', number , screen cloth material

Shutters ☐ hinged ☐ fixed Railings , Attic louvers

Exterior millwork grade and species Std. Paint L & O #1 , number coats 3

Additional information Front storm door 1 piece Tempered Fixed Glass Color by owner

19. CABINETS AND INTERIOR DETAIL: See cabinet details Door design by owner

Kitchen cabinets, wall units material Ash door and drawer fronts , linear feet of shelves shelf width 11 1/2"

Base units material W.P. Plywood , counter top Formica plastic lam. , edging self edging

Back and end splash Laminate full Finish of cabinets Same as doors and trim , number coats

Medicine cabinets make , model

Other cabinets and built in furniture See details

Additional information Medicine cabinets - PL GL mirrors See details

20. STAIRS:

Stair	Treads		Risers		Strings		Handrail		Balusters	
	Material	Thickness	Material	Thickness	Material	Size	Material	Size	Material	Size
Basement										
Main										
Attic										

Disappearing make and model number 25 1/2 x 54 job-built See details

Additional information

2

21. SPECIAL FLOORS AND WAINSCOT: *(Describe Carpet as listed in Certified Products Directory)*

	Location	Material, Color, Border, Sizes, Gage, Etc	Threshold Material	Wall Base Material	Underfloor Material
Floors	Kitchen	Vinyl asbestos			
	Bath	" "			
	Utility	" "			

	Location	Material, Color, Border, Cap, Sizes, Gage, Etc	Height	Height Over Tub	Height in Showers (From Floor)
Wainscot	Bath	Ash panelling to match woodwork			

Bathroom accessories ☐ Recessed, material , number , ☐ Attached material , number

Additional information

ASSIGNMENT SHEET #2

22. PLUMBING:

Fixture	Number	Location	Make	Mfr's Fixture Identification No	Size	Color
Sink	1	Kit	American std. or equal C.I.		16 x 32	White
Lavatory	2	Bath	Simulated Marble		L 6 round	
Water closet	2	Baths	American Std. or equal C.I.			White
Bathtub	1	Bath	Fiberglass with shower enclosure		5·0	White
Shower over tub △						
Stall shower △	1	Bath	Full fiberglass with door		42" x 36"	White
Laundry trays						

△☒ Curtain rod △☒ Door ☐ Shower pan material _____

Water supply ☒ public, ☐ community system, ☐ individual (private) system ★

Sewage disposal ☐ public, ☐ community system, ☒ individual (private) system ★

★ *Show and describe individual system in complete detail in separate drawings and specifications according to requirements*

House drain (inside) ☒ cast iron, ☐ tile, ☐ other _____ House sewer (outside) ☐ cast iron, ☒ tile, ☐ other _____

Water piping ☐ galvanized steel, ☒ copper tubing, ☐ other _____ Sill cocks, number 2

Domestic water heater type Automatic, make and model Republic, heating capacity _____ 25.2 gph 100° rise. Storage tank material Galv. iron, capacity 40 gallons

Gas service ☐ utility company, ☒ liq pet gas, ☐ other _____ Gas piping ☒ cooking, ☒ house heating

Footing drains connected to ☐ storm sewer, ☐ sanitary sewer, ☐ dry well Sump pump, make and model _____, capacity _____ discharges into _____

23. HEATING: See details - attached drawing

☐ Hot water ☐ Steam ☐ Vapor ☐ One-pipe system ☐ Two-pipe system

☐ Radiators ☐ Convectors ☐ Baseboard radiation Make and model _____

Radiant panel ☐ floor, ☐ wall, ☐ ceiling Panel coil material _____

☐ Circulator ☐ Return pump Make and model _____, capacity _____ gpm

Boiler make and model _____ Output _____ Btuh, net rating _____ Btuh

Additional information _____

Warm air ☐ Gravity ☒ Forced Type of system Perimeter

Duct material supply Sht. metal, return Sht. metal Insulation _____, thickness _____ ☐ Outside air intake

Furnace make and model Lennox Input 120,000 Btuh, output 96,000 Btuh

Additional information _____

☐ Space heater, ☐ floor furnace, ☐ wall heater Input _____ Btuh, output _____ Btuh, number units _____

Make, model _____ Additional information _____

Controls make and types Honeywell Automatic

Additional information _____

Fuel ☐ Coal, ☐ oil, ☒ gas, ☐ liq pet gas, ☐ electric, ☐ other _____, storage capacity _____

Additional information _____

Firing equipment furnished separately ☐ Gas burner, conversion type ☐ Stoker hopper feed ☐, bin feed ☐

Oil burner ☐ pressure atomizing, ☐ vaporizing _____

Make and model _____ Control _____

Additional information _____

Electric heating system type _____ Input _____ watts, @ _____ volts, output _____ Btuh

Additional information _____

Ventilating equipment attic fan, make and model yes, capacity 7800 cfm

kitchen exhaust fan make and model yes

Other heating, ventilating or cooling equipment _____

24. ELECTRIC WIRING:

Service ☐ overhead, ☒ underground Panel ☐ fuse box, ☒ circuit breaker make 200 AMP AMP's _____ No circuits _____

Wiring ☐ conduit ☐ armored cable, ☐ nonmetallic cable, ☐ knob and tube, ☐ other _____

Special outlets ☒ range, ☒ water heater, ☒ other Furnace and dryer

☐ Doorbell ☒ Chimes Push-button locations Front entrance Additional information _____

25. LIGHTING FIXTURES:

Total number of fixtures _____ Total allowance for fixtures typical installation, $ 300.00

Nontypical installation _____

Additional information _____

DESCRIPTION OF MATERIALS

ASSIGNMENT SHEET #2

DESCRIPTION OF MATERIALS

26. INSULATION:

Location	Thickness	Material, Type, and Method of Installation	Vapor Barrier
Roof	6"	Blown - Rockwool in attic	
Ceiling			
Wall	4"	Rockwool batts stapled in exterior walls	
Floor	4"	Rockwool batts stapled between floor joists	

27. MISCELLANEOUS: *(Describe any main dwelling materials, equipment, or construction items not shown elsewhere; or use to provide additional information where the space provided was inadequate. Always reference by item number to correspond to numbering used on this form.)*

1. All storm doors and windows
2. Water by approved rural water district, provide service from meter to house
3. Cabinet doors and drawers routed design
4. Turned 6" porch columns
5. Guttering

HARDWARE: *(make, material, and finish.)* Antique brass All exterior doors keyed alike Total allowance $150.00

SPECIAL EQUIPMENT: *(State material or make, model and quantity. Include only equipment and appliances which are acceptable by local law, custom and applicable FHA standards. Do not include items which, by established custom, are supplied by occupant and removed when he vacates premises or chattels prohibited by law from becoming realty.)*

Oven 30" Whirlpool or equal
Range hood " " "
Range top " " "
Dishwasher " " "
Disposal " " "

PORCHES:
See plans for details

TERRACES:
Patio 20' - 0" x 12' - 0" See details

GARAGES:
Single car garage. Drywall walls and ceilings, blown acoustical ceiling finish, and insulate same as rest of house. Paint walls.

WALKS AND DRIVEWAYS:
Driveway width 14'-0"; base material sand, thickness 4", surfacing material concrete, thickness 4"
Front walk, width 3'-0", material conc., thickness 4" Service walk, width 2'-6", material conc., thickness 4"
Steps, material _____, _____; treads _____", risers _____". Check walls _____

OTHER ONSITE IMPROVEMENTS:
(Specify all exterior onsite improvements not described elsewhere, including items such as unusual grading, drainage structures, retaining walls, fence, railings, and accessory structures.)

ASSIGNMENT SHEET #2

LANDSCAPING, PLANTING, AND FINISH GRADING: By Owner

Topsoil _____" thick. ☐ front yard; ☐ side yards, ☐ rear yard to _____ feet behind main building

Lawns *(seeded, sodded, or sprigged)* ☐ front yard _____, ☐ side yards _____, ☐ rear yard _____

Planting: ☐ as specified and shown on drawings; ☐ as follows:

_____ Shade trees, deciduous, _____" caliper.

_____ Low flowering trees, deciduous, _____' to _____'

_____ High-growing shrubs, deciduous, _____' to _____'

_____ Medium-growing shrubs, deciduous, _____' to _____'

_____ Low growing shrubs, deciduous, _____' to _____'

_____ Evergreen trees _____' to _____', B & B

_____ Evergreen shrubs, _____' to _____', B & B

_____ Vines, 2-year _____

IDENTIFICATION.—This exhibit shall be identified by the signature of the builder, or sponsor, and/or the proposed mortgagor if the latter is known at the time of application

Date _____ Signature _____

Signature _____

FHA Form 2005
VA Form 26-1852
Form FmHA 424-2

U S GOVERNMENT PRINTING OFFICE 1978 °68 792

SPECIFICATIONS
UNIT XIII

NAME _____

TEST

1. Match the terms on the right with the correct definitions.

_____a. Written instructions describing the basic requirements for constructing a building

_____b. Drawings made by the manufacturer of an item which show how the product is to be installed

_____c. Document signed by the architect, owner, and contractor which legally changes the contract documents in scope of time, work, and/or cost

_____d. List of items to be completed or repaired by the contractor before the owner takes control of the building

_____e. Term used in writing specifications to express what is mandatory

_____f. Term applied when a substitute can be used

_____g. To carry on a legal contest through judicial process

_____h. Independent contractor who signs a contract to perform more than 15% of the work with his own work force

_____i. An individual or business firm contracting to perform part of another contract

_____j. Document which contains signed agreement between owner and contractor, specifications, and drawings

_____k. Usually first section in specs which defines the relationship and responsibilities among the agreeing parties

_____l. Form used for residences which follows a format of blanks to be completed

1. Punch list
2. General contractor
3. Shall
4. Change order
5. Subcontractor
6. Fill-in form
7. Shop drawings
8. Litigation
9. Specifications
10. Equal
11. General conditions
12. Construction contract

2. State two purposes of specifications.

   a. _____

   b. _____

3. Complete the following statements concerning information included in specifications.

   a. Description of materials to be used

   b. Required building operations

   c. _____ notes for such items as lighting fixtures and hardware which are to be selected by the _____

   d. An indication that all specifications refer to the detailed plans of the

   _____

   e. Statement or agreement on _____ of workmanship

   f. Liability covered by the contractor during construction

4. Select true statements concerning characteristics of specifications by placing an "X" in the appropriate blanks.

   _____a. All drawings indicate quantity; specifications indicate quality

   _____b. Specifications take the place of the drawings

   _____c. When the house is to be constructed for sale, the client supplies the specifications

   _____d. When the house is being constructed for a particular client, the architect and client usually develop a "specification outline" together

   _____e. There is only one form for developing specifications

   _____f. Specifications can only be written by a drafter

   _____g. Brand names should always be used for large projects because they encourage competitive bidding

   _____h. Italics indicate items which have not been decided upon yet

5. List two errors to be aware of in specifications.

   a. _____

   b. _____

6. Demonstrate the ability to:

   a. Answer questions related to materials used in residential construction using *Sweet's Catalog File.*

   b. Fill in a VA-FHA "Description of Materials" form.

   (NOTE: If these activities have not been accomplished prior to the test, ask your instructor when they should be completed.)

SPECIFICATIONS
UNIT XIII

ANSWERS TO TEST

1. a. 9 g. 8
   b. 7 h. 2
   c. 4 i. 5
   d. 1 j. 12
   e. 3 k. 11
   f. 10 l. 6

2. a. Act as a legal document when used in conjunction with the set of drawings
   b. Communicate to contractor (or bidder)

3. c. Cash allowance, owner
   d. Working drawings
   e. Quality

4. a, d

5. Any two of the following:
   a. Difference between drawings and specifications
   b. Specification of materials is unclear
   c. Ambiguous and unfair clauses
   d. Omitted necessary clauses for owner's protection

6. Evaluated to the satisfaction of the instructor

PRESENTATION DRAWINGS
UNIT XIV

UNIT OBJECTIVE

After completion of this unit, the student should be able to select characteristics of perspectives and presentation drawings and shade, shadow, and texture. The student should also be able to draw one and two-point perspectives, and render perspectives. This knowledge will be evidenced by correctly performing the procedures outlined in the assignment sheets and by scoring 85 percent on the unit test.

SPECIFIC OBJECTIVES

After completion of this unit, the student should be able to:

1. Match terms related to presentation drawings with the correct definitions.
2. Identify types of perspectives.
3. Identify perspective views.
4. Select characteristics of perspectives and presentation drawings.
5. List methods for drawing perspectives.
6. Sequence the steps for drawing one-point perspectives.
7. Sequence the steps for drawing two-point perspectives.
8. Select characteristics of shade, shadow, and texture.
9. Match rendering techniques with the correct characteristics.
10. Sequence the steps for preparing renderings.
11. Demonstrate the ability to:
    a. Locate vanishing points.
    b. Draw a one-point perspective.
    c. Draw two-point perspectives.
    d. Shade and shadow various objects.
    e. Render an elevation.
    f. Render perspectives.

PRESENTATION DRAWINGS
UNIT XIV

SUGGESTED ACTIVITIES

I. Provide student with objective sheet.

II. Provide student with information and assignment sheets.

III. Make transparencies.

IV. Discuss unit and specific objectives.

V. Discuss information and assignment sheets.

VI. Invite a local architect to show his/her presentation drawings, and discuss when presentation drawings are needed and the amount of time used in making these drawings.

VII. Discuss the methods available for drawing perspectives as outlined in Objective VI. Demonstrate the proper ways to use this equipment.

VIII. Invite a commercial artist to demonstrate the type of rendering that he/she commonly uses.

IX. Discuss the advantages and disadvantages of each type of rendering technique.

X. Demonstrate various techniques of shading.

XI. Provide examples of traditional and unusual renderings.

XII. Show a color wheel and discuss the effectiveness of various color combinations in color renderings, especially complementary and supplementary colors.

XIII. Give test.

INSTRUCTIONAL MATERIALS

I. Included in this unit:

A. Objective sheet

B. Information sheet

C. Transparency masters

1. TM 1--Types of Perspectives
2. TM 2--Perspective Views
3. TM 3--Perspective Equipment

4. TM 4- Drawing a One-Point Perspective

   4A--Overlay

   4B--Overlay

5. TM 5--Drawing a Two-Point Perspective

   5A--Overlay

   5B--Overlay

   5C--Overlay

   5D--Overlay

6. TM 6--Shade, Shadow, and Texture

7. TM 7--Shade, Shadow, and Texture (Continued)

8. TM 8--Preparing Renderings

D. Assi ent sheets

1 Assignment Sheet #1--Locate Vanishing Points

2. Assignment Sheet #2--Draw a One-Point Perspective

3. Assignment Sheet #3--Draw Two-Point Perspectives

4. Assignment Sheet #4--Shade and Shadow Various Objects

5. Assignment Sheet #5--Render an Elevation

6. Assignment Sheet #6--Render Perspectives

E. Test

F. Answers to test

II. References:

A. Hepler, Donald E. and Paul I Wallach. *Architecture Drafting and Design.* St. Louis: Gregg Division/McGraw-Hill Book Co., 1977.

B. Spence, William P. *Architecture Design - Engineering - Drawing.* Bloomington, IL: McKnight Publishing Co., 1979.

C. Weidhaas, Ernest R. *Architectural Drafting and Construction.* Boston: Allyn and Bacon, Inc., 1974.

D. Brown, Walter C. *Drafting for Industry.* South Holland, IL: Goodheart-Willcox Co., Inc., 1978.

PRESENTATION DRAWINGS
UNIT XIV

INFORMATION SHEET

I. Terms and definitions

A. Presentation drawing--Isometric, oblique, or perspective drawing with rendering usually added so others can visualize the finished structure

(NOTE: Presentation drawings can help fund-raising campaigns for proposed community buildings and directors of corporations deciding on new plants because they can get a better idea of how it will look.)

B. Perspective--Pictorial drawing made by the intersection of the picture plane with lines of sight meeting from points on the object to the point of sight

C. Delineation--Process of drawing pictures for display as opposed to making detailed working drawings

D. Horizon line (HL)--Eye level of the person viewing the drawing and the line on which the vanishing points are located

E. Ground line (GL)--Line on which the bottom of the object being drawn rests

F. Picture plane (PP)--Projection plane of the plan view of the object being drawn

G. Station point (SP)--Assumed point representing the observer's eye

H. Vanishing point (VP)--A point on the horizon at which receding lines seem to meet

I. Vanishing lines--Lines of the object which meet on the vanishing points

J. One-point perspective--Has only one vanishing point and the frontal plane of the object is parallel to the picture plane

K. Two-point perspective--Has two vanishing points

(NOTE: These points are identified as vanishing point right [VPR] and vanishing point left [VPL].)

L. Three-point perspective--Has three vanishing points

M. Cone of vision--Scope of what the observer sees without moving his eyes

(NOTE: The cone begins at the station point and should not exceed 30° or distortion will sometimes occur.)

N. Texture--Surface characteristics and appearance of an object

O. Shade--A surface turned away from light

INFORMATION SHEET

P. Shadow--A surface from which light is excluded by the shaded surface

Q. Render--The addition of texture, shade, and shadow, and sometimes colors to a drawing in order to make a building and its surroundings look more realistic

II. Types of perspectives (Transparency 1)

A. One-point

B. Two-point

C. Three-point

III. Perspective views (Transparency 2)

A. Above horizon (Worm's eye view)

B. Horizon (Person's eye view)

C. Below horizon (Bird's eye view)

IV. Characteristics of perspectives and presentation drawings

A. A two-point perspective is the most common type of presentation drawing used in architecture

B. A one-point perspective is well suited for interior drawings

C. Perspectives eliminate distortion of drawn objects

D. Perspectives should resemble a photograph

E. Receding lines on a perspective create the illusion of depth

F. Perspective drawings do not reveal the true size and shape of the building

(NOTE: If you draw a perspective looking at a building from one end, the far end looks smaller. Of course, the height is equal on both sides of the actual building, but this true size is not represented on the drawing.)

G. Perspective drawings are not used for working designs

H. On a one-point perspective, the front view is drawn to the exact scale of the building

I. On a two-point perspective, no sides are drawn exactly to scale; the only true length line is the corner of the building from which the sides are projected

J. Dimensions and heating and plumbing details are omitted from presentation drawings

INFORMATION SHEET

K. Presentation drawings should be drawn on heavy, high-quality stock that will take pencil, ink, or watercolors

L. Uniform lettering is vital to an attractive presentation drawing

V. Methods for drawing perspectives (Transparency 3)

A. Perspective drawing boards

Example: KLOK Board

(NOTE: These devices are used to rapidly draw one-point or two-point perspectives.)

B. Perspective charts and grids

(NOTE: These are ordered according to scale of drawing desired and the distance of the station point from the object.)

C. Manually drawn

D. Machines

Example: Tektronix 4051 Graphics System

VI. Drawing one-point perspectives (Transparency 4 and Overlays 4A and 4B)

A. Draw picture plane line, plan view, elevation, and floor line

(NOTE: The plan view is usually drawn so it touches the picture plane line.)

B. Locate the station point on the center of vision below the plan

(NOTE: This is usually located about the width of the plan away from the picture plane or a 60° cone of vision.)

C. Project the perspective frame representing the picture plane in elevation, and locate the vanishing point

(NOTE: The vanishing point is located in the frame at the desired distance above the floor line or bottom of frame. No horizon line is needed.)

D. Project interior walls toward the vanishing point

1. Project all features from the plan to the station point to determine horizontal spacing

2. At the intersection of the projector and the picture plane, drop verticals

INFORMATION SHEET

3. Project the height from the elevation to the frame (true height line)

   (NOTE: Observe how the heights are carried along the walls,ceiling, and floor to where they are needed.)

E. Determine the height of objects located away from walls

   Example: Tables

   1. Establish their heights on the nearest wall

   2. Project horizontally to the same wall on the plan

   3. Now the location and height can be brought down to the perspective

      (NOTE: Detail is now added, but it is difficult to show all detail on the accompanying transparency.)

VII. Drawing two-point perspectives (Transparency 5 and Overlays 5A, 5B, 5C, and 5D)

A. Draw a horizontal line across the entire width of the paper; this is the picture plane line

B. Draw the plan view at the desired angle

   1. The plan view is usually drawn behind the picture plane (above the picture plane line) with one corner touching the picture plane .

   2. The plan view is usually drawn with the front face inclined 30°

C. Locate station point, line from corner of plan view to station point, ground line, and horizon line

   1. Locate the station point (representing the eye of the observer) directly in front of the plan view with a 45° maximum cone of vision

      (NOTE: Occasionally a greater cone of vision is used. The station point should not be moved sideways because it will give a distorted perspective.)

   2. Draw a line from the intersection of the plan view and the picture plane to the station point

   3. Draw the ground line parallel to the picture plane line near the bottom of the page

   4. Draw the horizon line parallel to the ground line

      a. This is usually drawn 6' to scale above the ground line for a person's eye view

INFORMATION SHEET

b. The horizon line may be placed in other locations if you want a bird's eye or worm's eye view, but the person's eye view is the most common (Transparency 2)

D. Locate vanishing points

1. From the station point, draw lines parallel to the sides of the plan view until they cross the picture plane line

2. From these intersections, drop lines perpendicular to picture plane until they cross the horizon line

3. This establishes the two vanishing points (VPL and VPR)

E. Draw elevation view on ground line to the side of the area where you are drawing the perspective view

F. Project the front corner which touches the picture plane to the perspective view

1. Since this corner touches the picture plane, it is a true length line in the perspective

2. Lay off its true height by projecting from the elevation

G. Find the perspective of horizontal lines by projecting from the true height line to the vanishing points

H. Draw other corners

1. Draw projection lines from the other corners (those which will show in perspective view) to the station point

2. Where these projections cut the picture plane, drop perpendiculars

I. Draw all doors, windows, and special features

1. Draw projection lines from these features to the station point

2. Where these projections cut the picture plane, drop perpendiculars

(NOTE: There are many projection lines and the drawing can become crowded. Therefore, erase projectors after they have served their purpose. Details such as mullions are usually just estimated.)

J. Draw the roof

1. Project the ridge until it cuts the picture plane; drop perpendicular from intersection to ground line

(NOTE: This projection becomes a true length line.)

2. Measure actual height of ridge on true length line and project to vanishing point

INFORMATION SHEET

3. Find the length of the ridge in the manner used for the corners of the building

4. Project the overhang

K. Erase projection lines and darken in visible lines

(NOTE: The perspective is now drawn, but it is usually not considered complete until it has been rendered.)

VIII. Characteristics of shade, shadow, and texture (Transparencies 6 and 7)

A. When an object is subjected to rays of light, that portion receiving the light is rendered light, while the portion not receiving the light is darker

B. Details such as shrubs and windows should be highlighted to give a natural appearance

C. Techniques of shading include lines, dots, and grey tones

D. After the angle of the sun is established, all shading should be consistent with direction and angle of the shadow

E. The intensity of a shadow varies from black to a very light tone which shows the difference in the amount of light reflected

F. Texture of rough surfaces such as shrubs or building materials can be shown by shading

IX. Rendering techniques and characteristics

A. Pencil--Popular and easy to do especially for sketches

(NOTE: Colored pencils also are easy to use and add color for interest and contrast.)

B. Pen and ink--Allows sharp details, and reproduces well

C. Felt tip markers--Distinctive look, but difficult to add fine details with broad tip

D. Tempera--Opaque, water-based paint frequently used for monotone renderings

E. Watercolor--Transparent, water-based paint which allows a wide use of light and dark

F. Air brush--Miniature paint gun using small dots to form subtle shades and shadows

(NOTE: This can be very difficult to master.)

G. Appliques--Pressure-sensitive transparent film of lines, symbols, dots, or colors

INFORMATION SHEET

X. Preparing renderings (Transparency 8)

A. Block in with single lines the projection of the perspective

B. Sketch the outline of building materials

C. Establish angle of sun and sketch shadows and shading

D. Darken windows, door areas, and areas under the roof overhangs

E. Add texture to the outline of building materials using light pressure on areas that are in direct sunlight

F. Complete the rendering by emphasizing light and dark areas and establishing more visible contrasts of light and dark shadow patterns

(NOTE: Sometimes sketches of people or automobiles are added to show the relative size of a building.)

Types of Perspectives

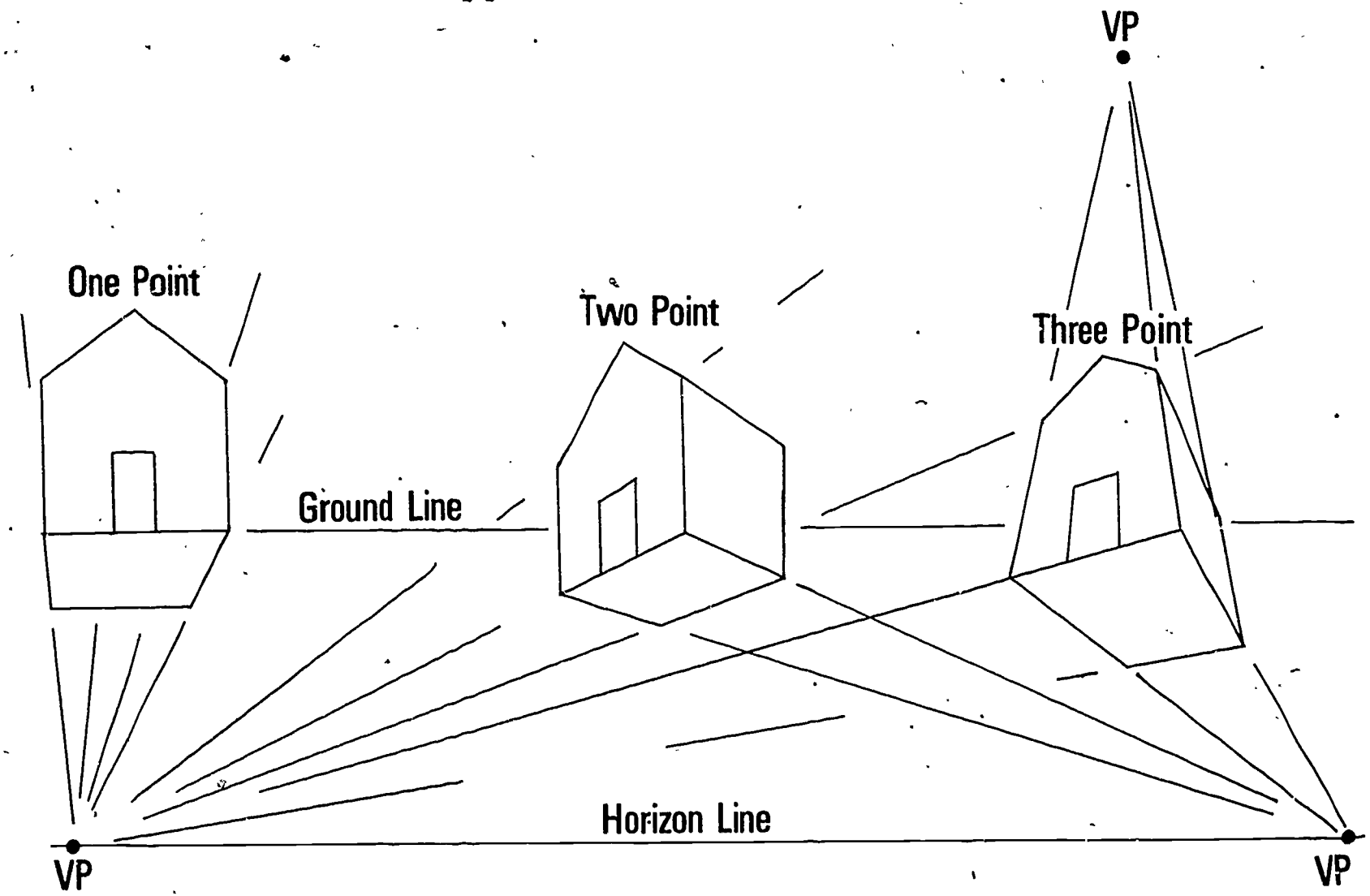

Perspective Views

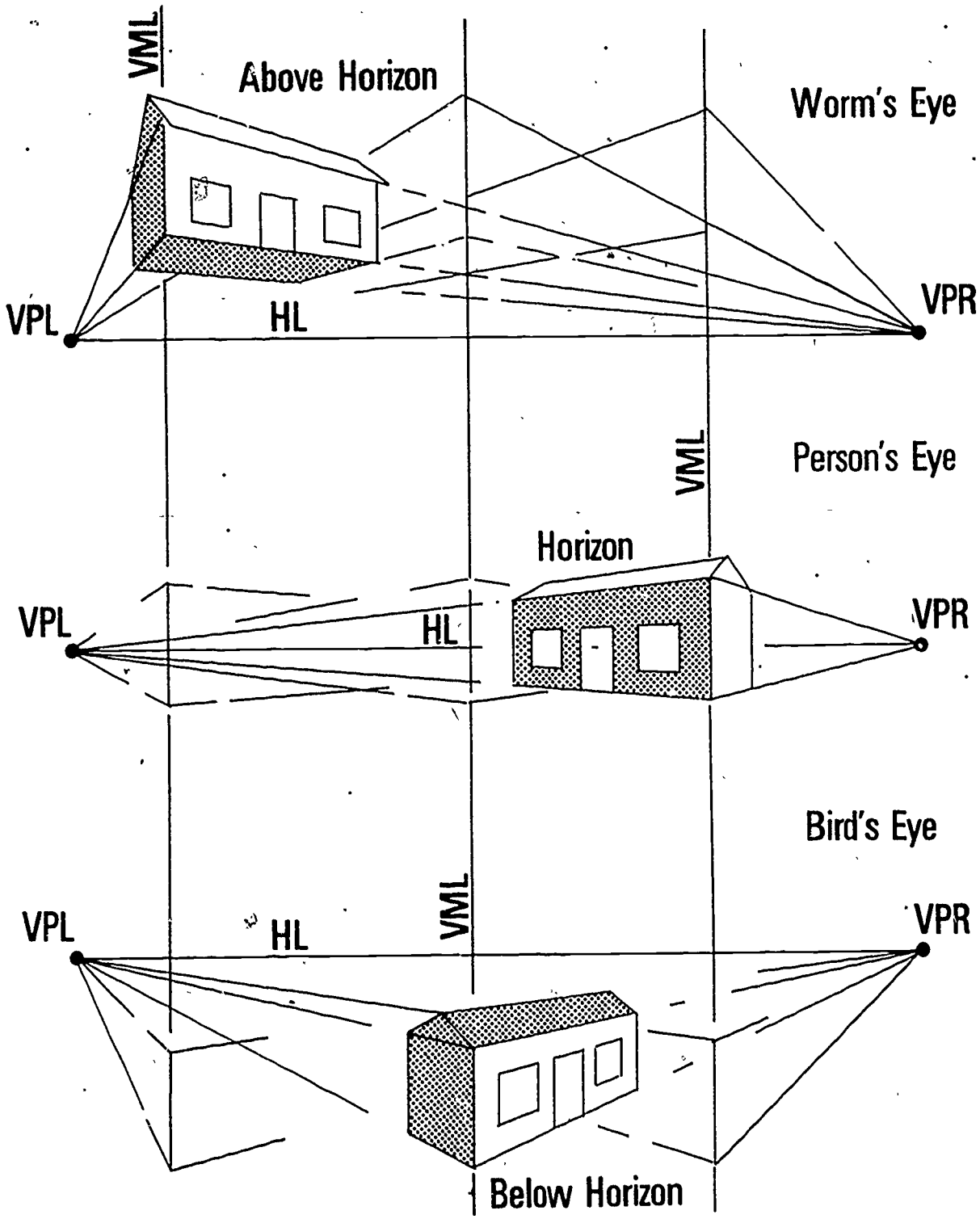

Perspective Equipment

Grids

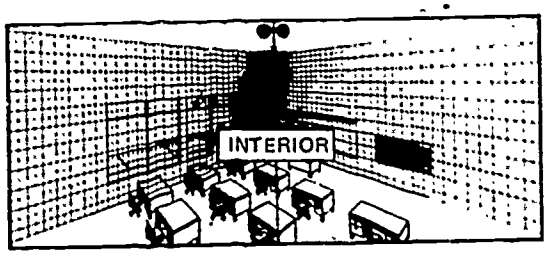

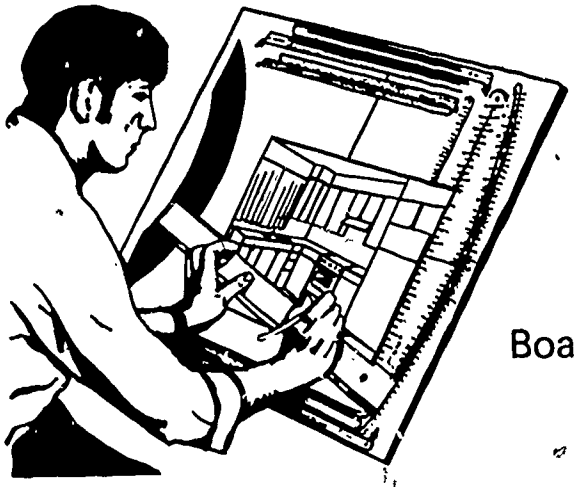

Board

Tektronix 4956 Digitizer

Machines

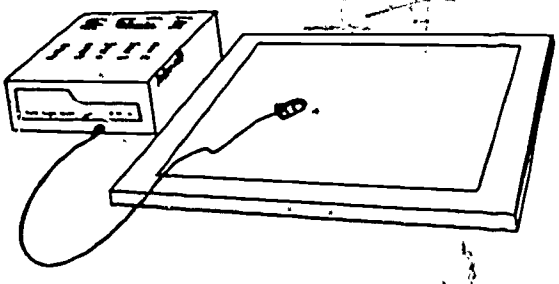

Tektronix 4051 Graphics System

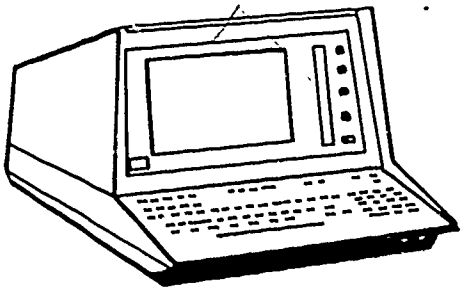

Tektronix 4662 Plotter

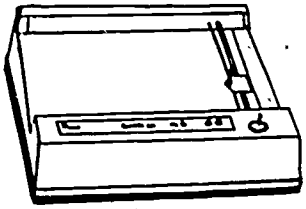

Drawing a One-Point Perspective

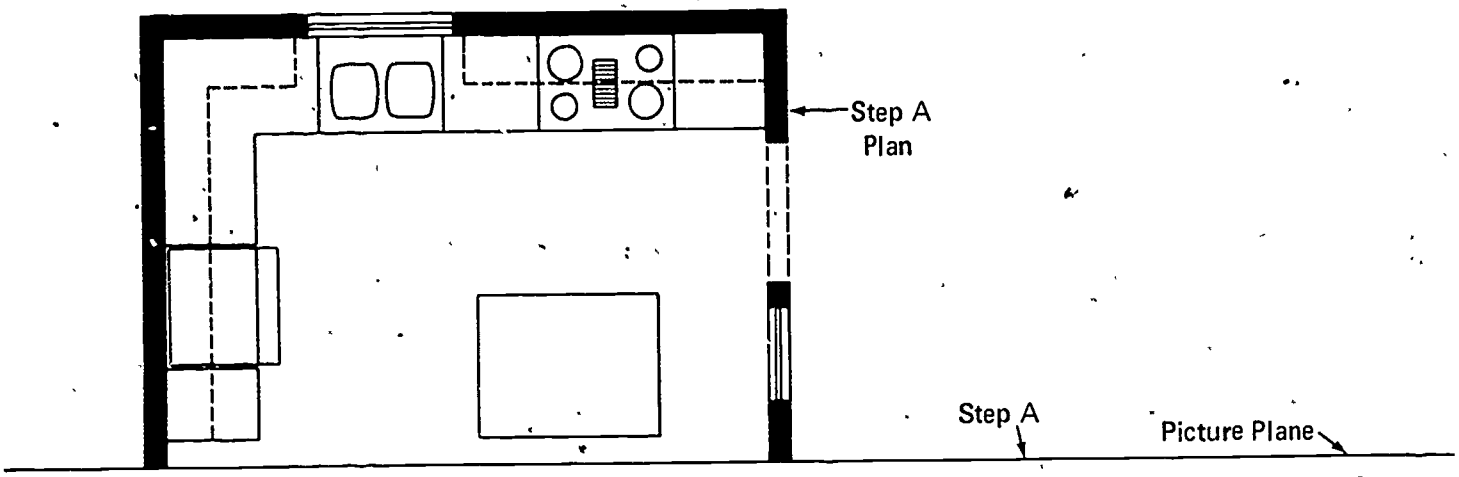

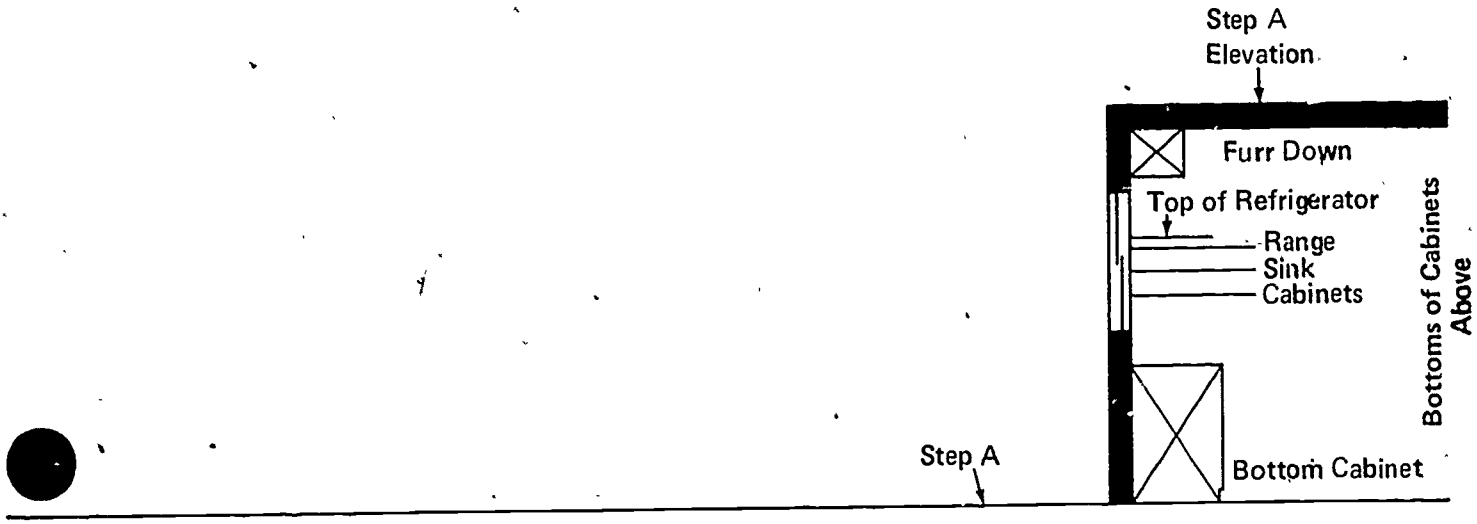

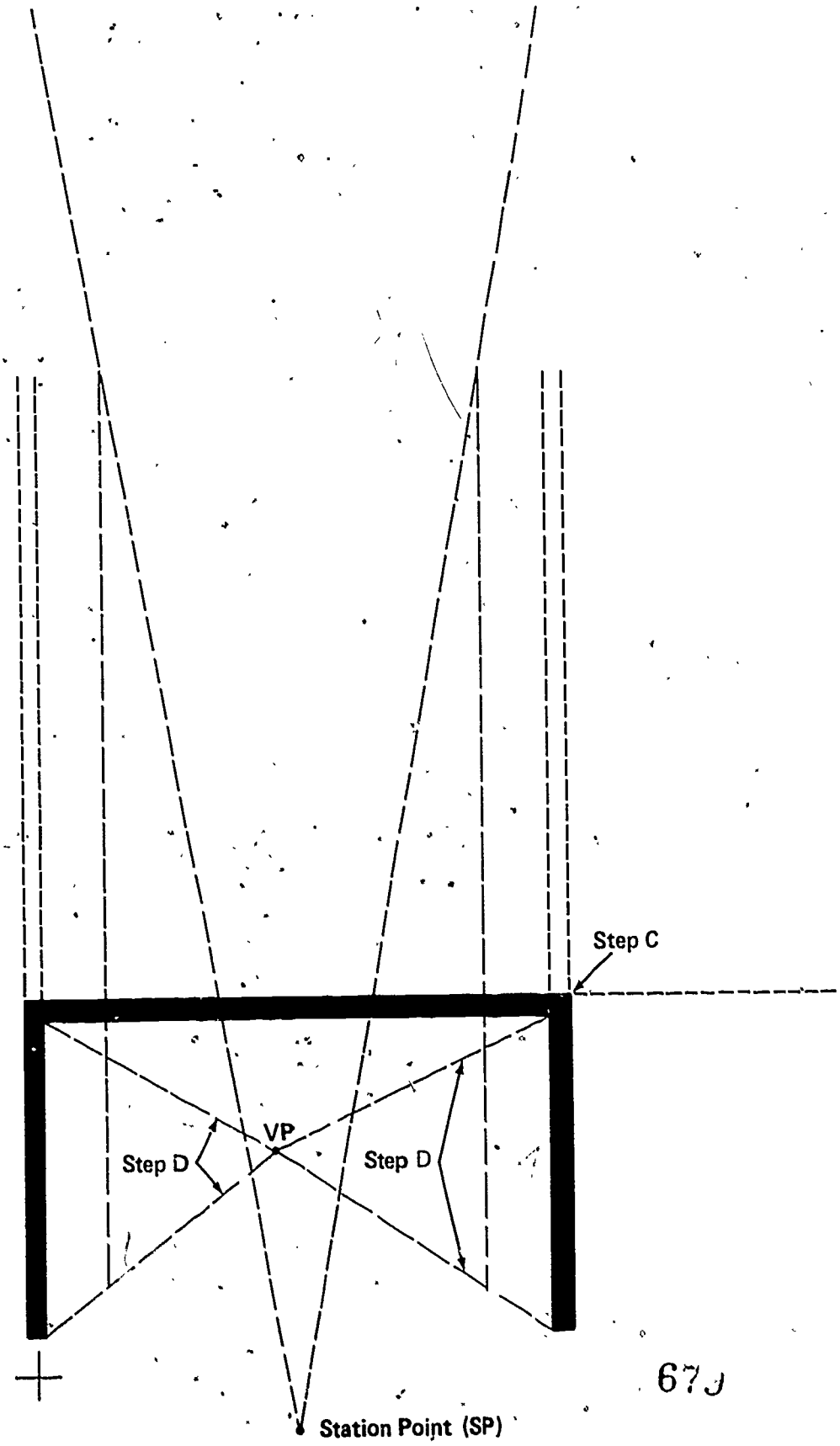

Overlay 4B

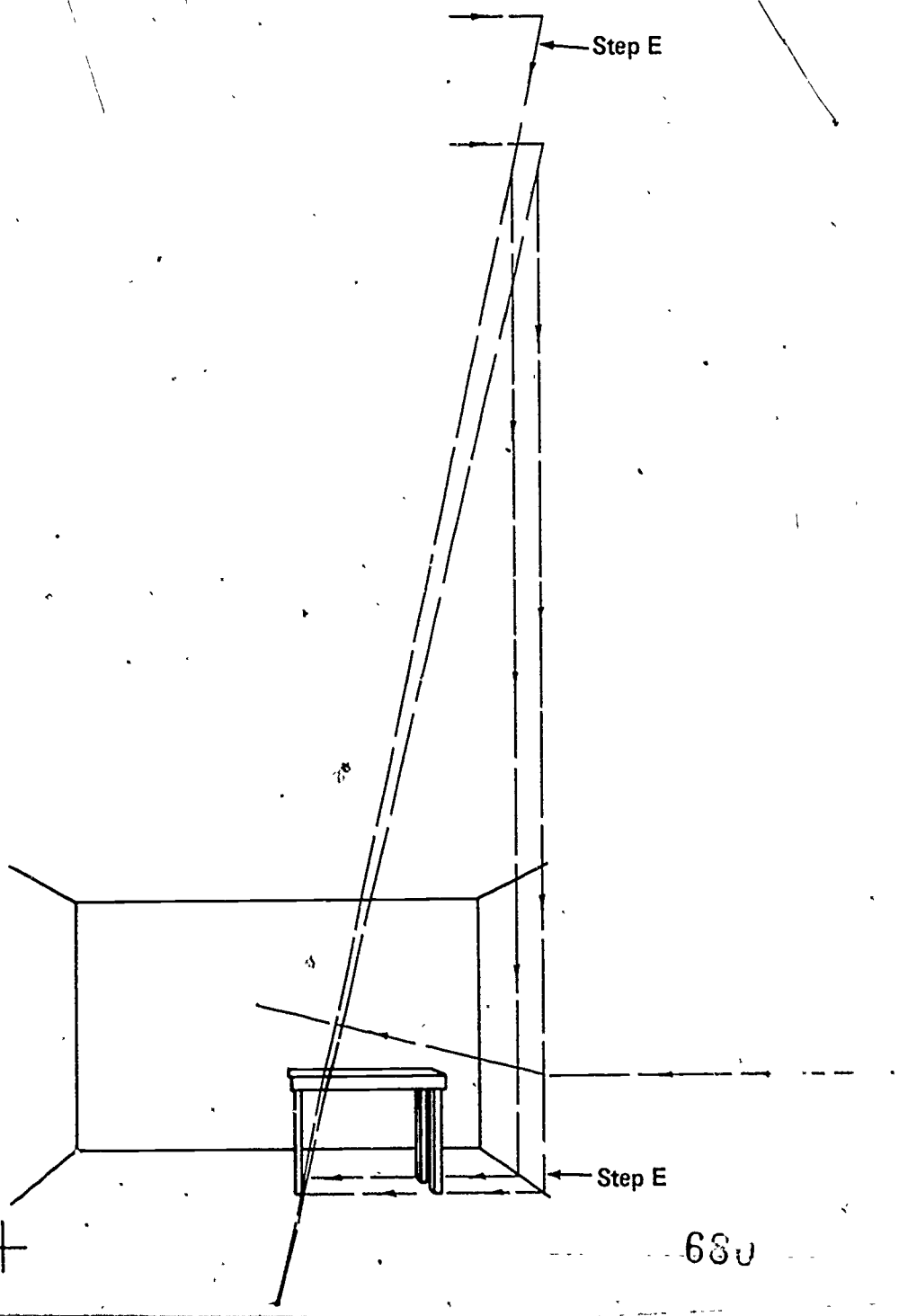

Overlay 4A

Drawing a Two-Point Perspective

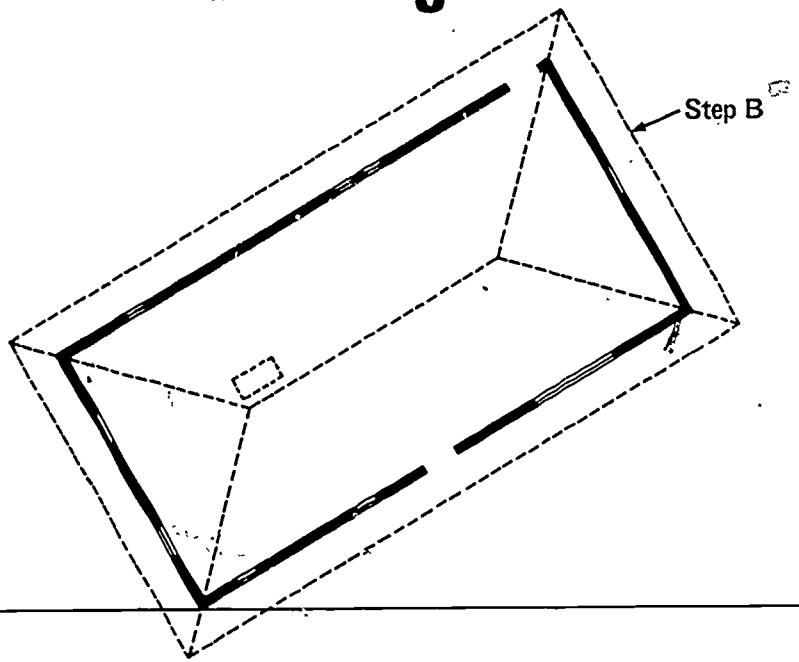

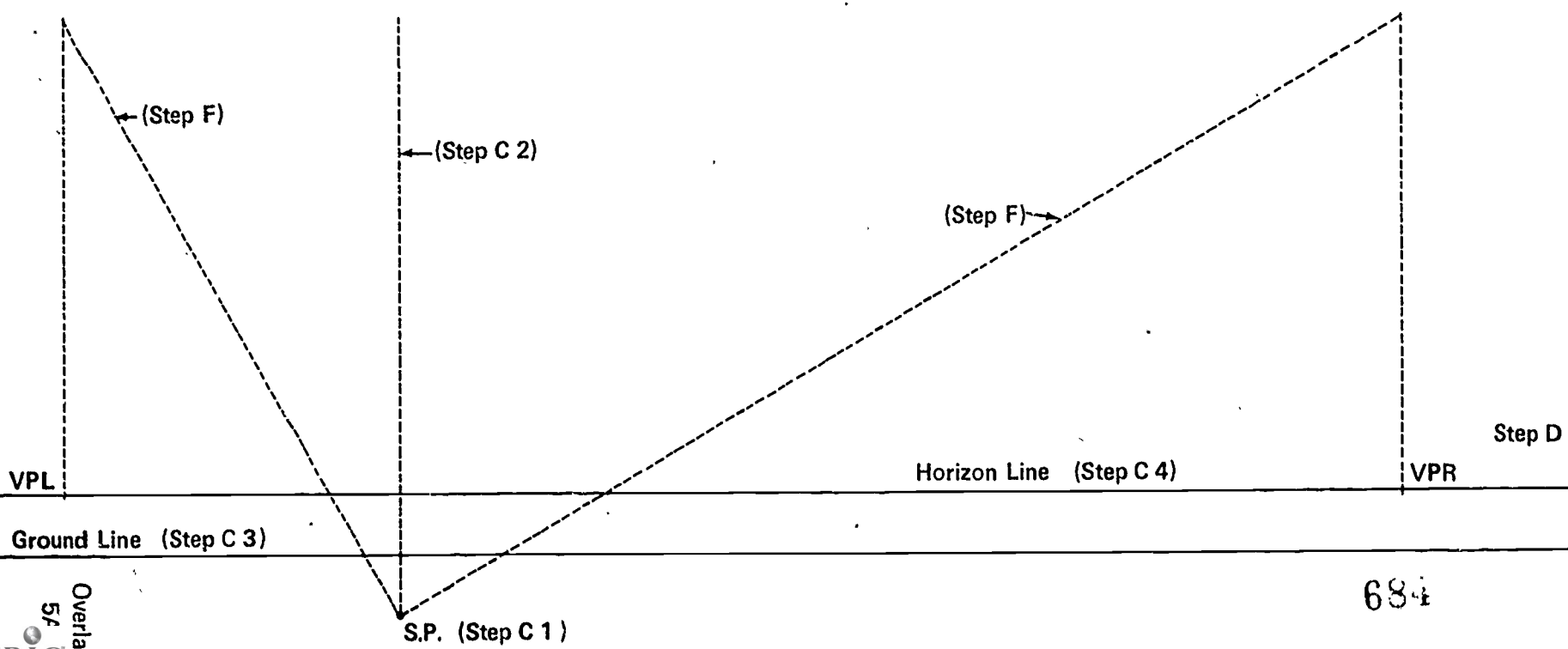

Overlay 5f

683

684

AD-839

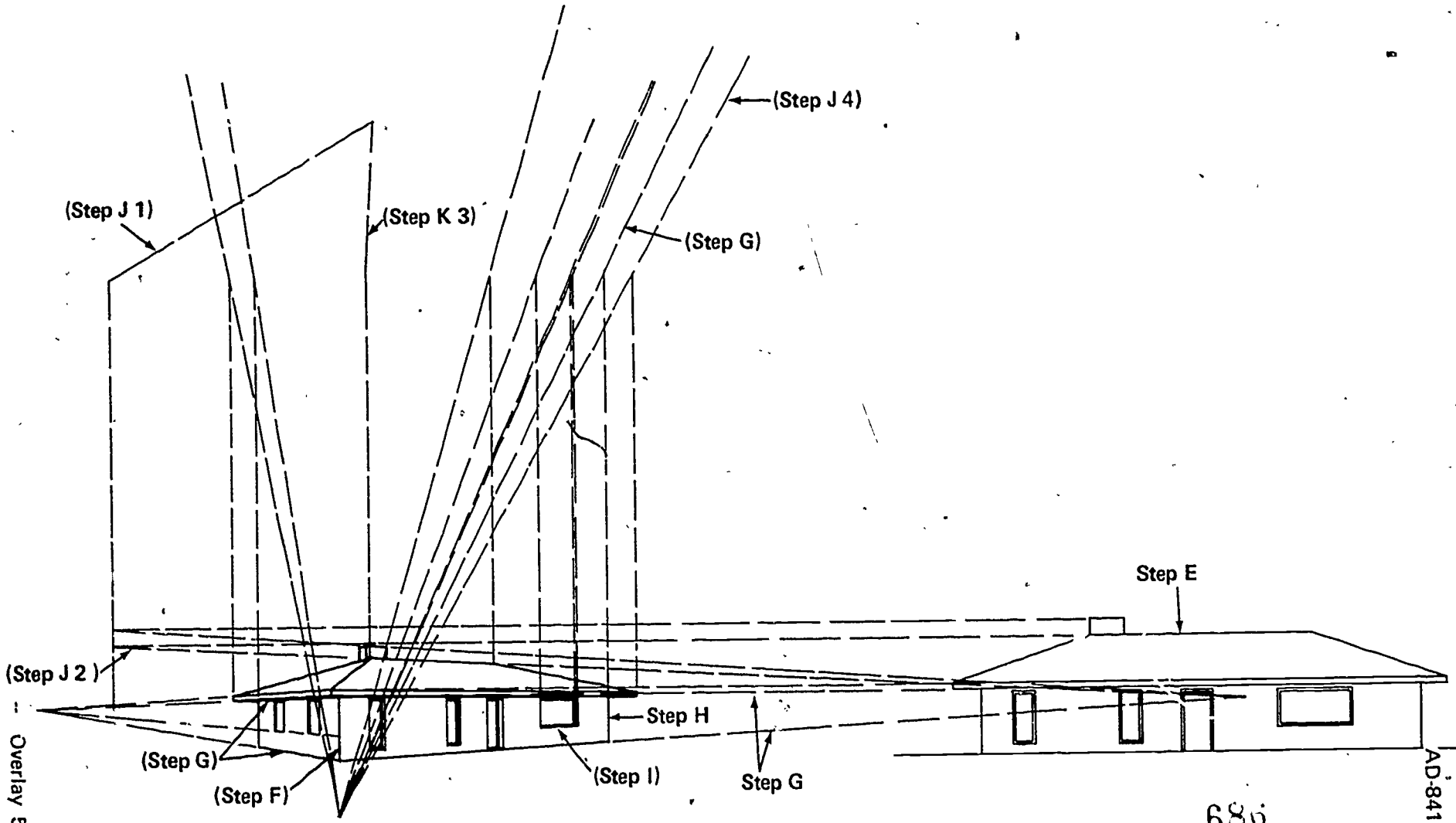

AD-841

Overlay 5

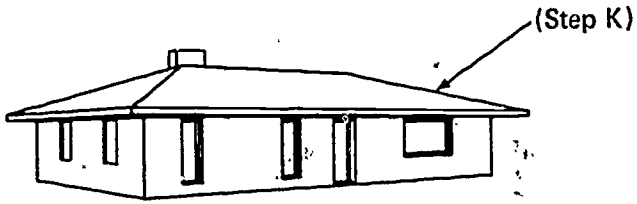
(Step K)

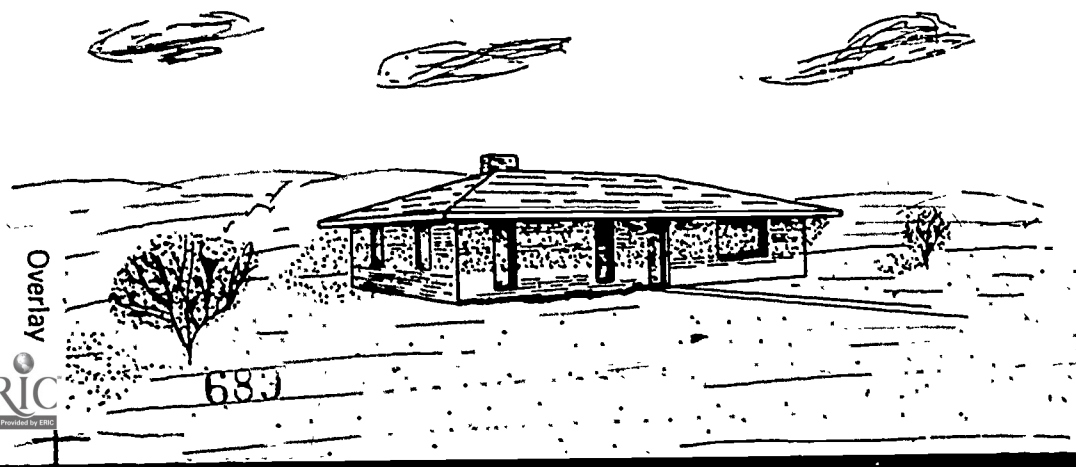

Overlay

Surrounding Area Detail Added

AD-845

Shade, Shadow, and Texture

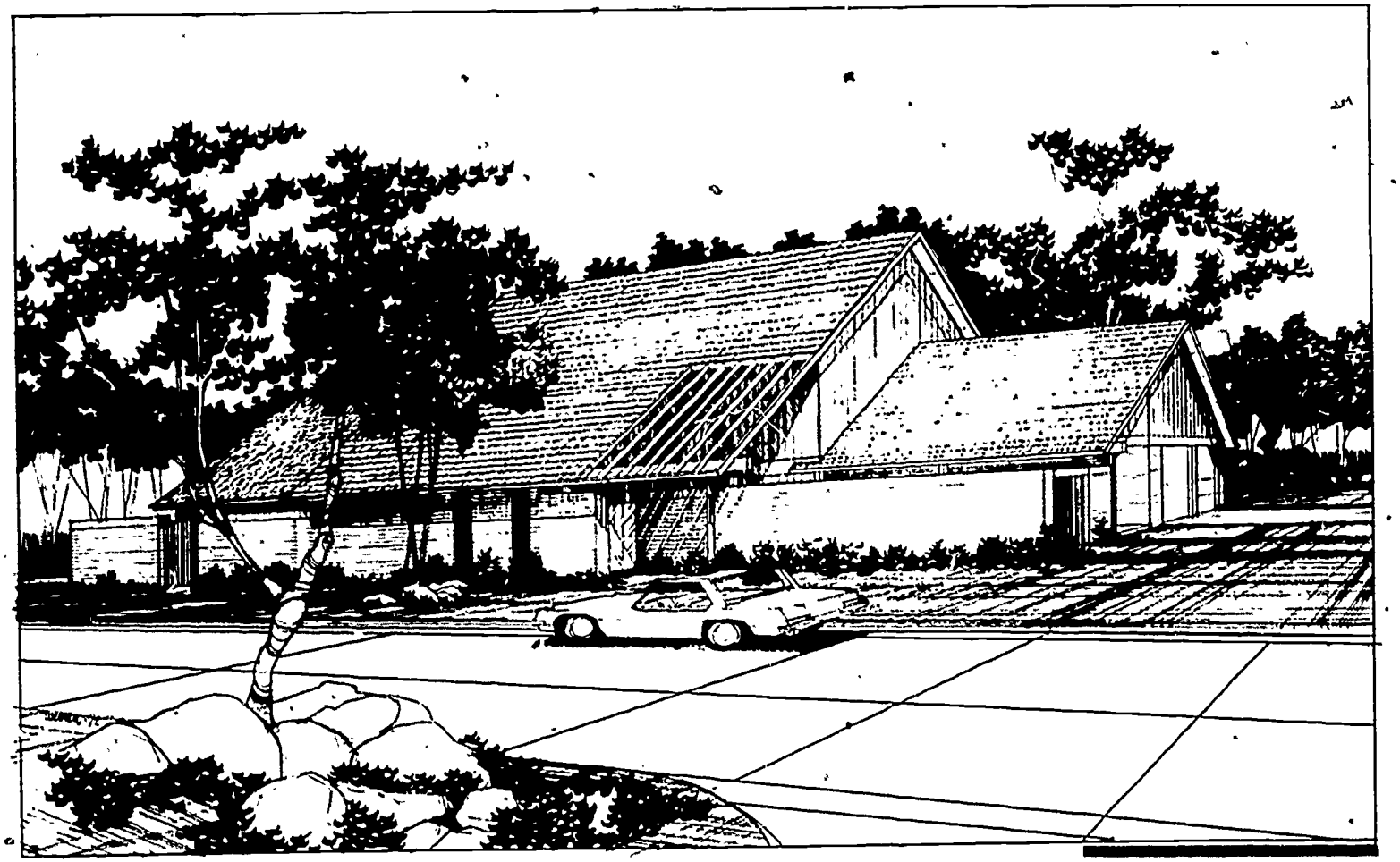

glen a summers and associates
architects stillwater oklahoma

AD-847

TN

Shade, Shadow, and Texture

(Continued)

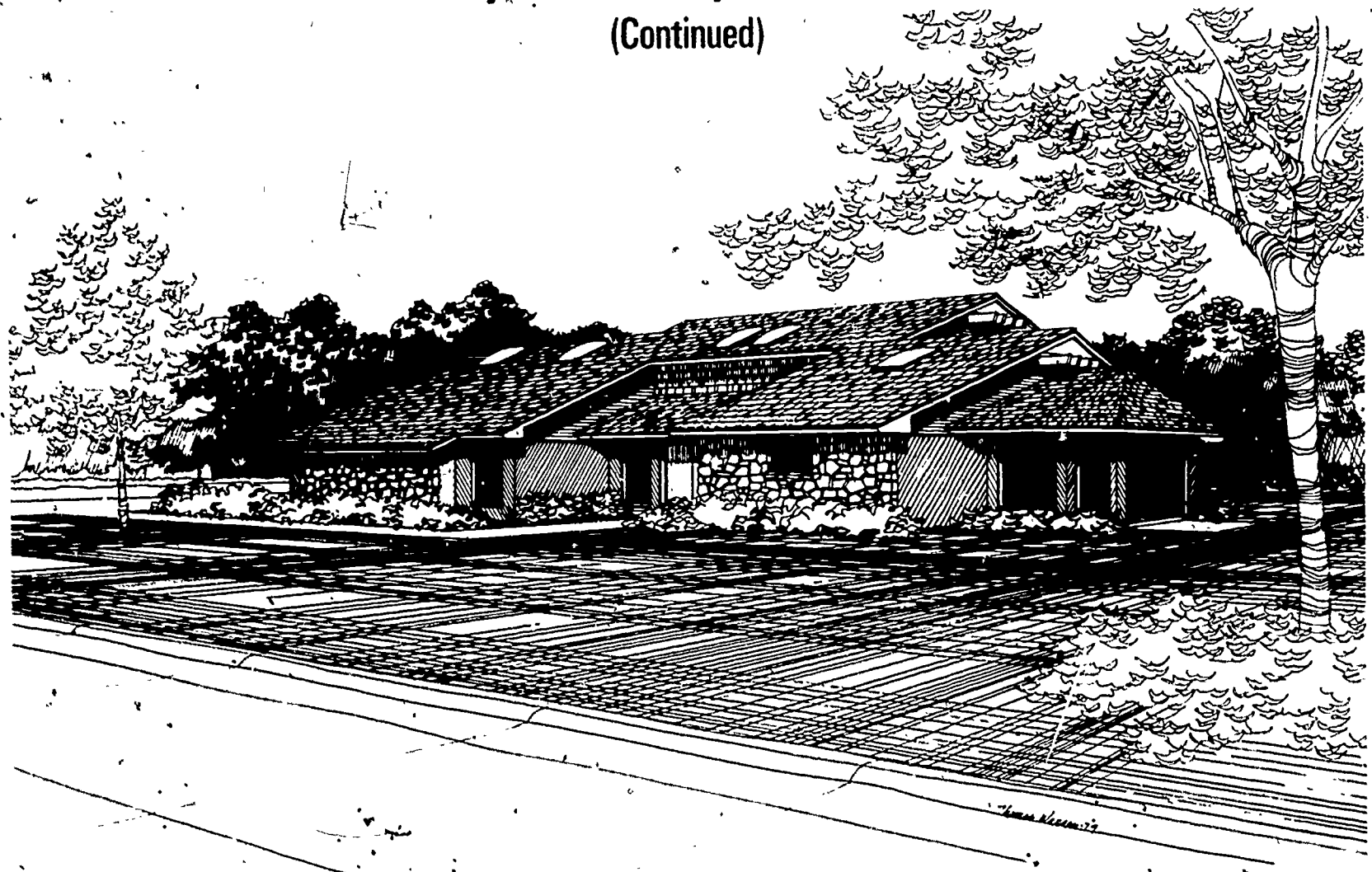

glen a summers and associates
architects stillwater oklahoma

AD-849

Preparing Renderings

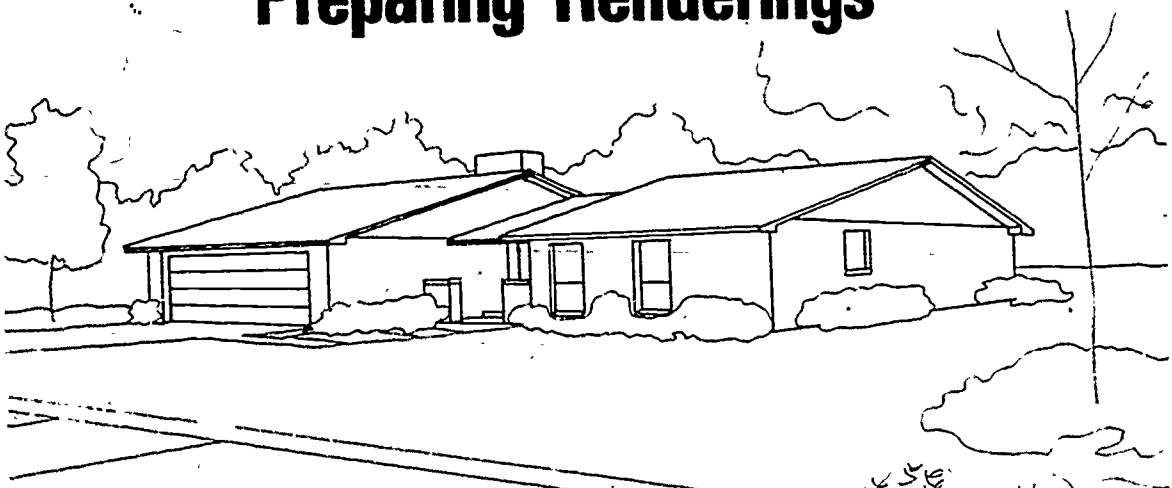

Outline Blocked In

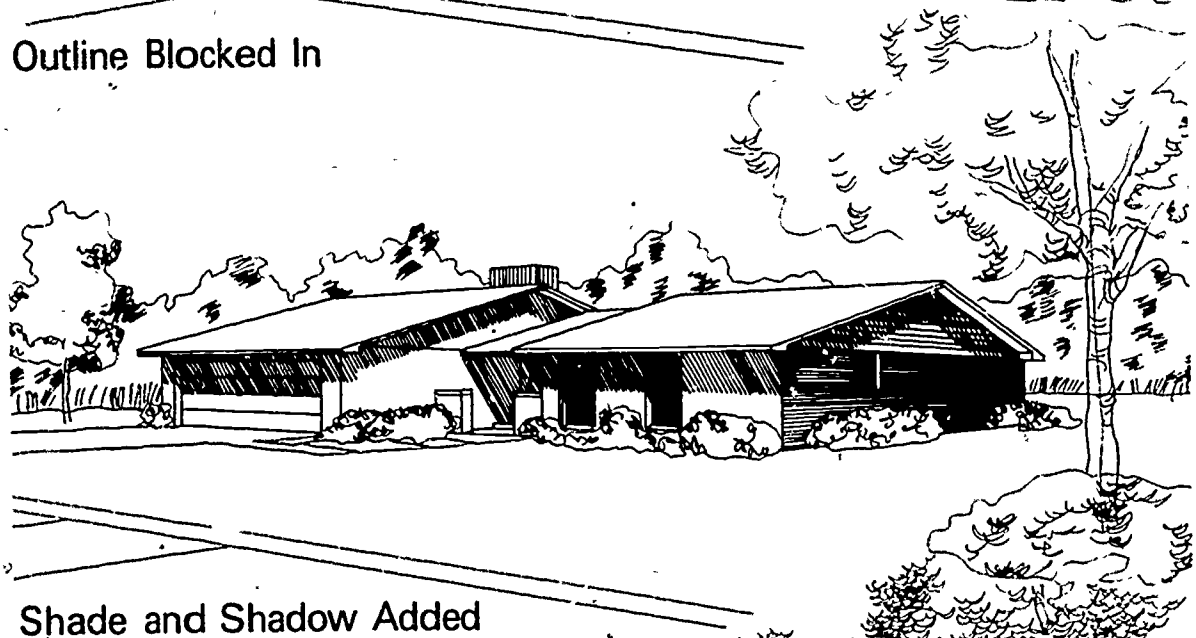

Shade and Shadow Added

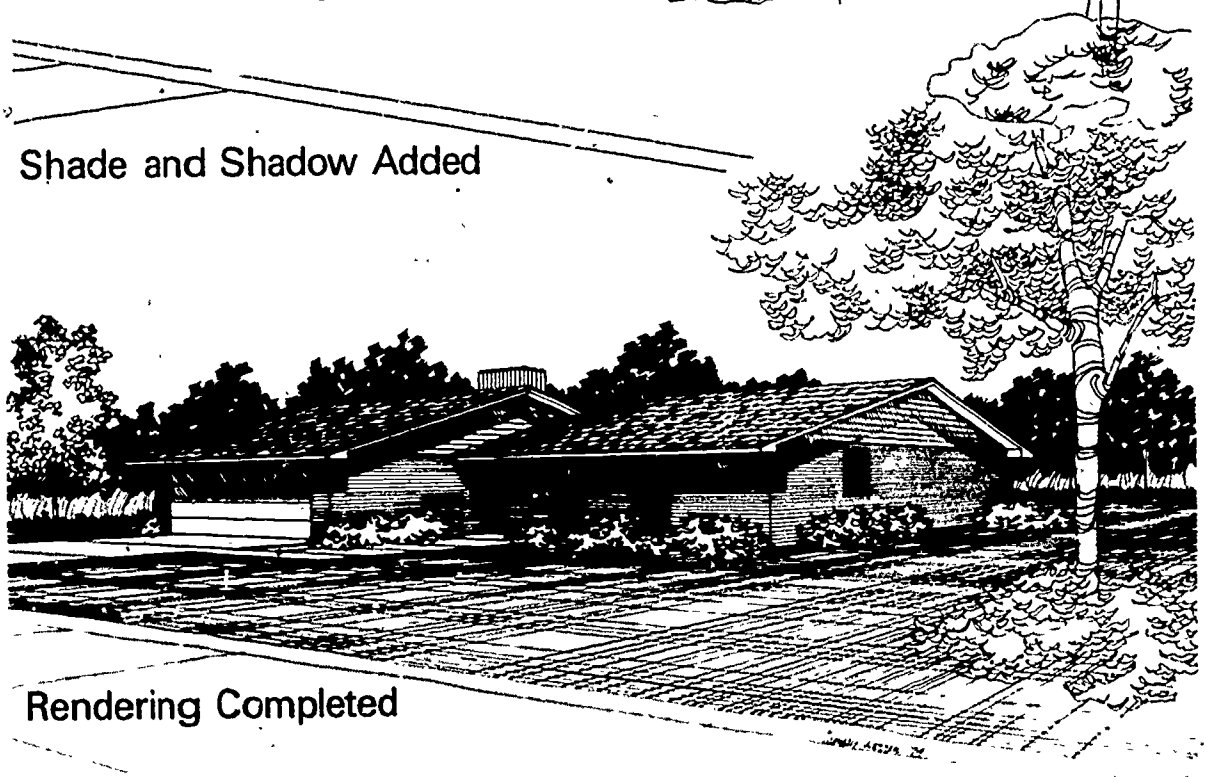

Rendering Completed

PRESENTATION DRAWINGS
UNIT XIV

ASSIGNMENT SHEET #1--LOCATE VANISHING POINTS

Directions: Locate the vanishing points and horizon lines in the following perspectives.

Problem A:

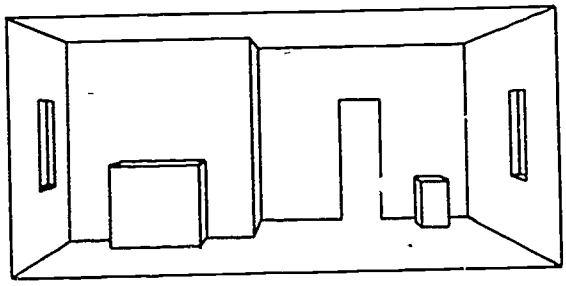

Problem B:

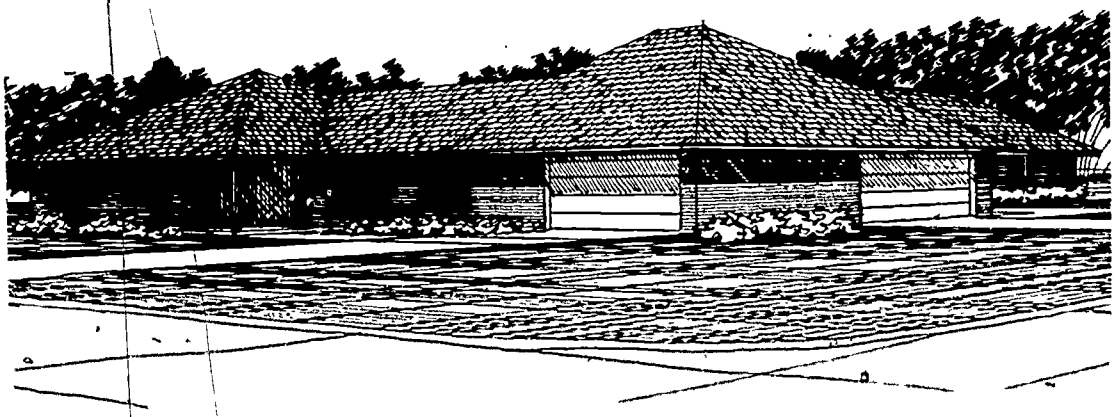

PRESENTATION DRAWINGS
UNIT XIV

ASSIGNMENT SHEET #2--DRAW A ONE-POINT PERSPECTIVE

Directions: Draw a one-point perspective of the kitchen in your design project. Use the plan and elevations you drew in Unit VI "Working Drawings" and Unit IX "Details."

(NOTE: Your instructor may wish to provide other plan and elevation drawings to use for this assignment.)

PRESENTATION DRAWINGS
UNIT XIV

ASSIGNMENT SHEET #3--DRAW TWO-POINT PERSPECTIVES

Directions: Draw two-point perspectives for the following problems.

Problem A: Use the plan and elevation included below.

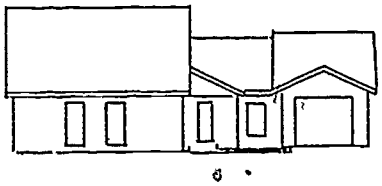

Problem B: Use the plan and elevation you drew for your design project in Unit VI, "Working Drawings."

PRESENTATION DRAWINGS
UNIT XIV

ASSIGNMENT SHEET #4--SHADE AND SHADOW VARIOUS OBJECTS

Directions: Shade and shadow the following objects taking into consideration the direction of the source of light.

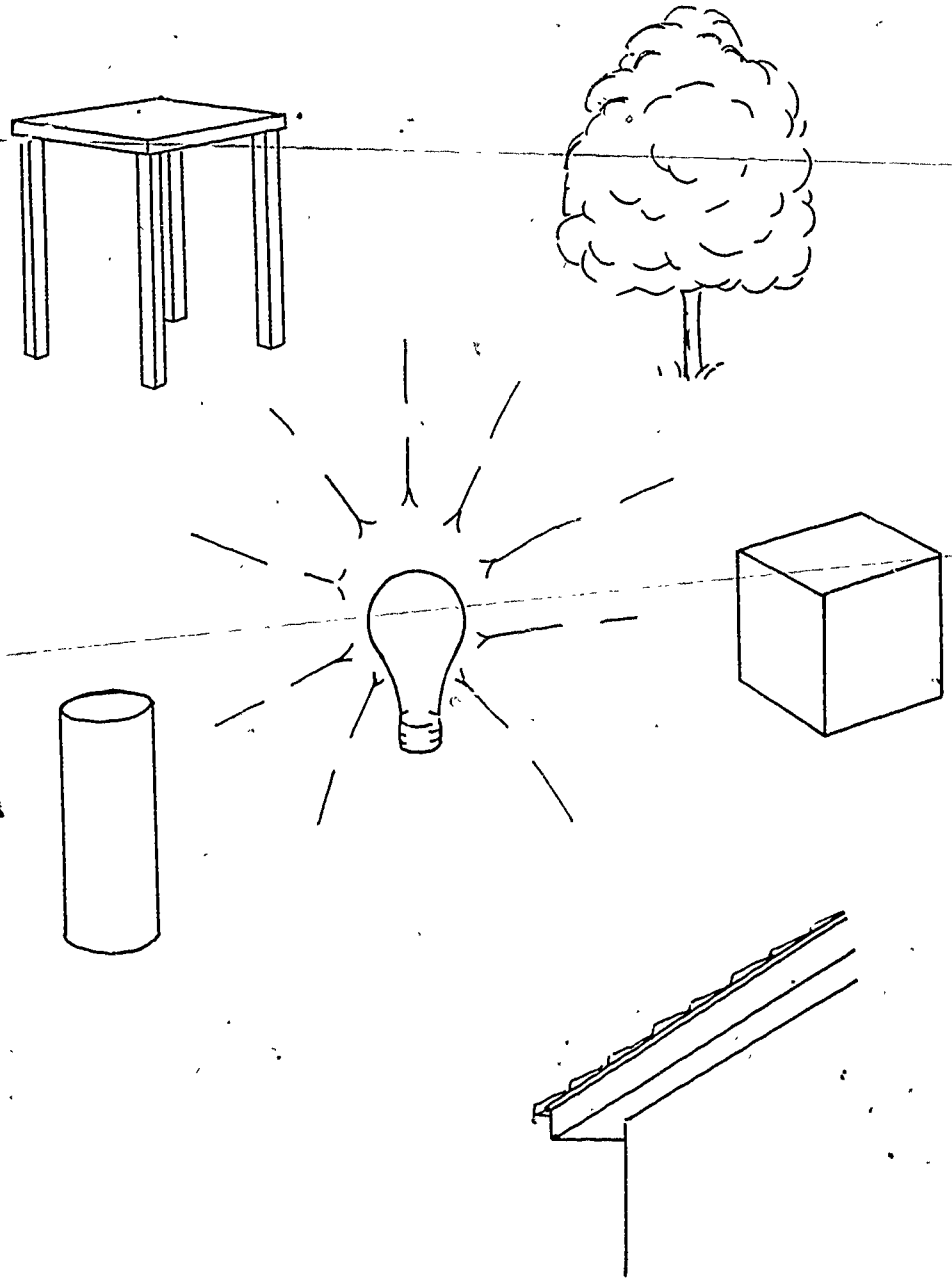

PRESENTATION DRAWINGS
UNIT XIV

ASSIGNMENT SHEET #5--RENDER AN ELEVATION

Directions: Render the elevation you drew in Unit VI, "Working Drawings." You may use one technique of your choice such as pencil, ink, watercolors, or markers, or you may combine techniques. Check with instructor before combining techniques because some can be used effectively together, while others detract when used in combinations.

PRESENTATION DRAWINGS
UNIT XIV

ASSIGNMENT SHEET #6--RENDER PERSPECTIVES

Directions: Render perspectives for the following problems using different rendering techniques.

Problem A: Two-point perspective you drew in Assignment Sheet #3-A.

Problem B: Two-point perspective you drew in Assignment Sheet #3-B.

PRESENTATION DRAWINGS
UNIT XIV

NAME _____

TEST

1. Match the terms on the right with the correct definitions.

_____a. Isometric, oblique, or perspective drawing with rendering usually added so others can visualize the finished structure

_____b. Pictorial drawing made by the intersection of the picture plane with lines of sight meeting from points on the object to the point of sight

_____c. Process of drawing pictures for display as opposed to making detailed working drawings

_____d. Eye level of the person viewing the drawing and the line on which the vanishing points are located

_____e. Line on which the bottom of the object being drawn rests

_____f. Projection plane of the plan view of the object being drawn

_____g. Assumed point representing the observer's eye

_____h. A point on the horizon at which receding lines seem to meet

_____i. Lines of the object which meet on the vanishing points

_____j. Has only one vanishing point and the frontal plane of the object is parallel to the picture plane

_____k. Has two vanishing points

_____l. Has three vanishing points

_____m. Scope of what the observer sees without moving his eyes

_____n. Surface characteristics and appearance of an object

1. Three-point perspective
2. Render
3. Vanishing point
4. Two-point perspective
5. Texture
6. Presentation drawing
7. One-point perspective
8. Shade
9. Shadow
10. Horizon line
11. Delineation
12. Vanishing lines
13. Station point
14. Perspective

_____o. A surface turned away from light

_____p. A surface from which light is excluded by the shaded surface

_____q. The addition of texture, shade, and shadow, and sometimes colors to a drawing in order to make a building and its surroundings look more realistic

15. Picture plane

16. Cone of vision

17. Ground line

2. Identify types of perspectives.

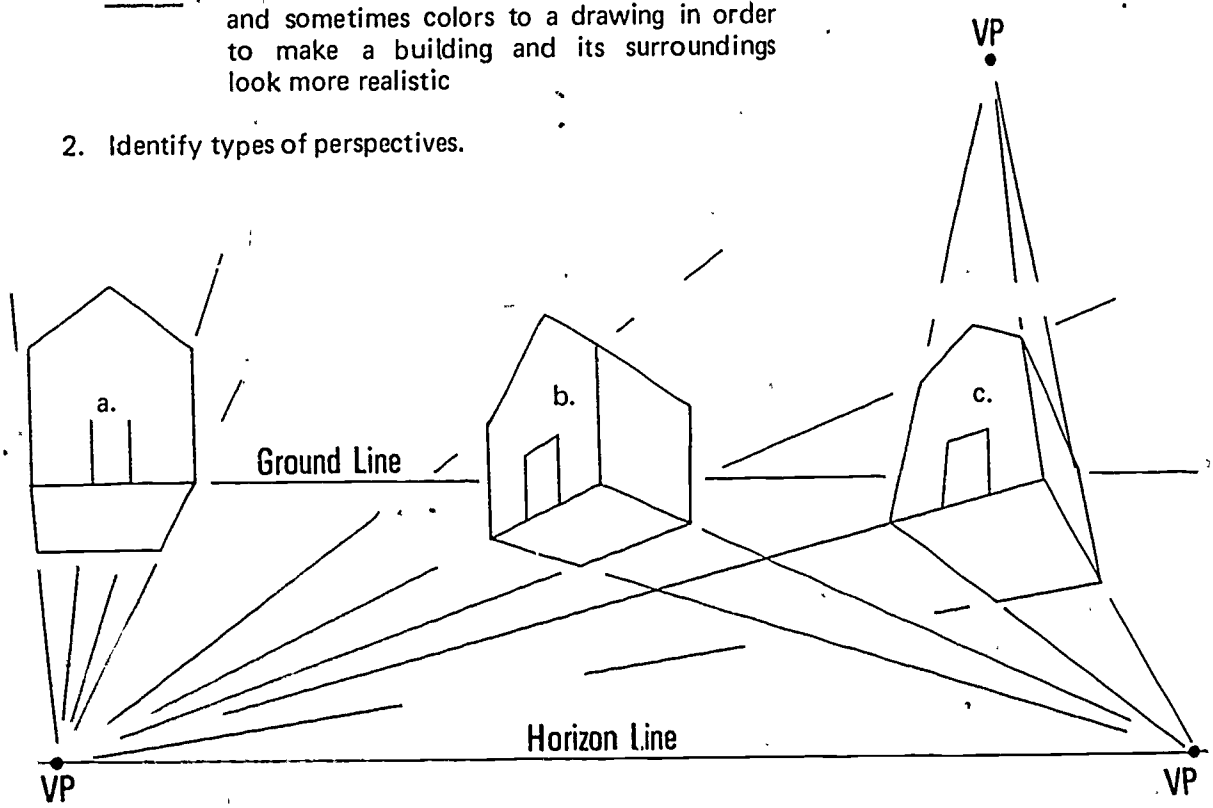

a. _____ b. _____ c. _____

3. Identify perspective views.

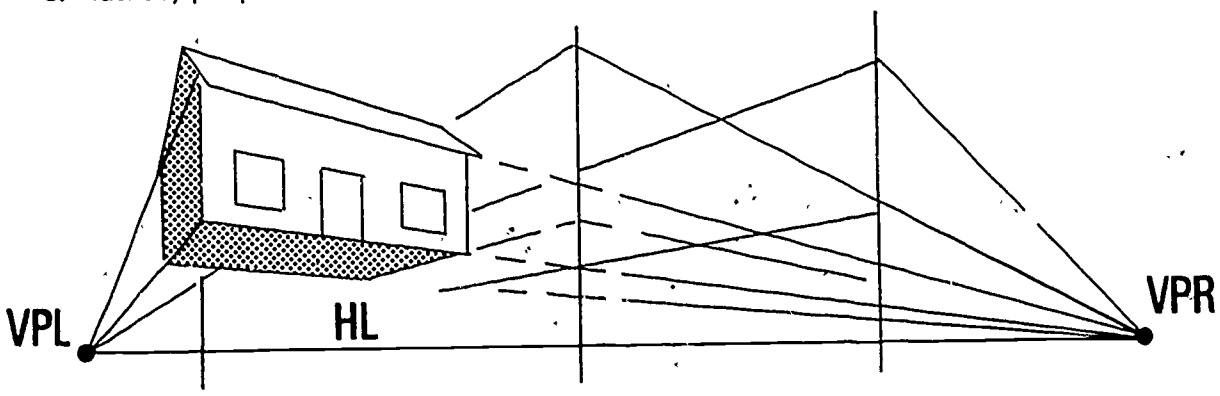

a. _____

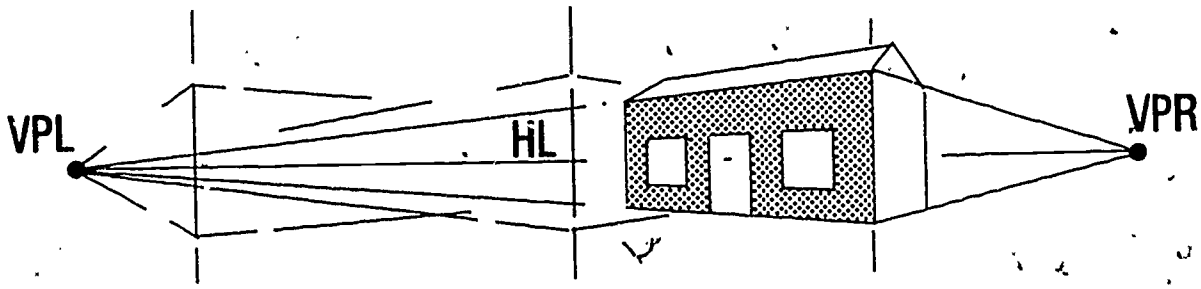

b. _____

4. Select characteristics of perspectives and presentation drawings by placing an "X" in the appropriate blanks.

_____a. A one-point perspective is the most common type of presentation drawing used in architecture

_____b. Perspectives eliminate distortion of drawn objects

_____c. Perspectives should resemble a photograph

_____d. Receding lines on a perspective create the illusion of depth

_____e. Perspective drawings reveal the true size and shape of the building

_____f. Perspective drawings are always used for working designs

_____g. On a three-point perspective, the front view is drawn to the exact scale of the building

_____h. On a one-point perspective, no sides are drawn exactly to scale

_____i. Dimensions and heating and plumbing details are always included on a presentation drawing

5. List three methods for drawing perspectives.

a. _____

b. _____

c. _____

6. Sequence the steps for drawing one-point perspectives by placing the correct sequence numbers in the appropriate blanks.

_____a. Project the perspective frame representing the picture plane in elevation, and locate the vanishing point

_____b. Draw picture plane line, plan view, elevation, and floor line

_____c. Project interior walls toward the vanishing point

_____d. Locate the station pointon the center of vision below the plan

_____e. Determine the height of objects located away from walls

7. Sequence the steps for drawing two-point perspectives by placing the correct sequence numbers in the appropriate blanks.

_____a. Draw the roof

_____b. Locate station point, line from corner of plan view to station point, ground line, and horizon line

_____c. Draw other corners

_____d. Project the front corner which touches the picture plane to the perspective view

_____e. Find the perspective of horizontal lines by projecting from the true height line to the vanishing points

_____f. Draw a horizontal line across the entire width of the paper; this is the picture plane line

_____g. Erase projection lines and darken in visible lines

_____h. Locate vanishing points

__5__i. Draw elevation view on ground line to the side of the area where you are drawing the perspective view

_____j. Draw the plan view at the desired angle

_____k. Draw all doors, windows, and special features

8. Select characteristics of shade, shadow, and texture by placing an "X" in the appropriate blanks.

_____a. When an object is subjected to rays of light, that portion receiving the light is rendered dark, while the portion not receiving the light is lighter

_____b. Details such as shrubs and windows should not be highlighted

_____c. Techniques of shading include lines, dots, and grey tones

_____d. Shading should be drawn before the angle of the sun is established

_____e. Texture of rough surfaces such as shrubs or building materials can be shown by shading

9. Match rendering techniques on the right with the correct characteristics.

_____a. Popular and easy to do especially for sketches

_____b. Allows sharp details, and reproduces well

_____c. Distinctive look, but difficult to add fine details with broad tip

_____d. Opaque, water-based paint frequently used for monotone renderings

1. Tempera
2. Appliques
3. Watercolor
4. Felt tip markers

_____e. Transparent, water-based paint which allows a wide use of light and dark

_____f. Miniature paint gun using small dots to form subtle shades and shadows

_____g. Pressure-sensitive transparent film of lines, symbols, dots, or colors

5. Pencil
6. Air brush
7. Pen and ink

10. Sequence the steps for preparing renderings by placing the correct sequence numbers in the appropriate blanks.

_____a. Add texture to the outline of building materials using light pressure on areas that are in direct sunlight

_____b. Establish angle of sun and sketch shadows and shading

_____c. Sketch the outline of building materials

_____d. Block in with single lines the projection of the perspective

_____e. Complete the rendering by emphasizing light and dark areas and establishing more visible contrasts of light and dark shadow patterns

_____f. Darken windows, door areas, and areas under the roof overhangs

11. Demonstrate the ability to:

a. Locate vanishing points.

b. Draw a one-point perspective.

c. Draw two-point perspectives.

d. Shade and shadow various objects.

e. Render an elevation.

f. Render perspectives.

(NOTE: If these activities have not been accomplished prior to the test, ask your instructor when they should be completed.)

PRESENTATION DRAWINGS
UNIT XIV

ANSWERS TO TEST

1. a. 6 g. 13 m. 16
   b. 14 h. 3 n. 5
   c. 11 i. 12 o. 8
   d. 10 j. 7 p. 9
   e. 17 k. 4 q. 2
   f. 15 l. 1

2. a. One-point
   b. Two-point
   c. Three-point

3. a. Above horizon (Worm's eye view)
   b. Horizon (Person's eye view)

4. b, c, d

5. Any three of the following:
   a. Perspective drawing boards
   b. Perspective charts and grids
   c. Manually drawn
   d. Machines

6. a. 3 d. 2
   b. 1 e. 5
   c. 4

7. a. 10 g. 11
   b. 3 h. 4
   c. 8 i. 5
   d. 6 j. 2
   e. 7 k. 9
   f. 1

8. c, e

9. a. 5 e. 3
   b. 7 f. 6
   c. 4 g. 2
   d. 1

10. a. 5 d. 1
    b. 3 e. 6
    c. 2 f. 4

11. Evaluated to the satisfaction of the instructor

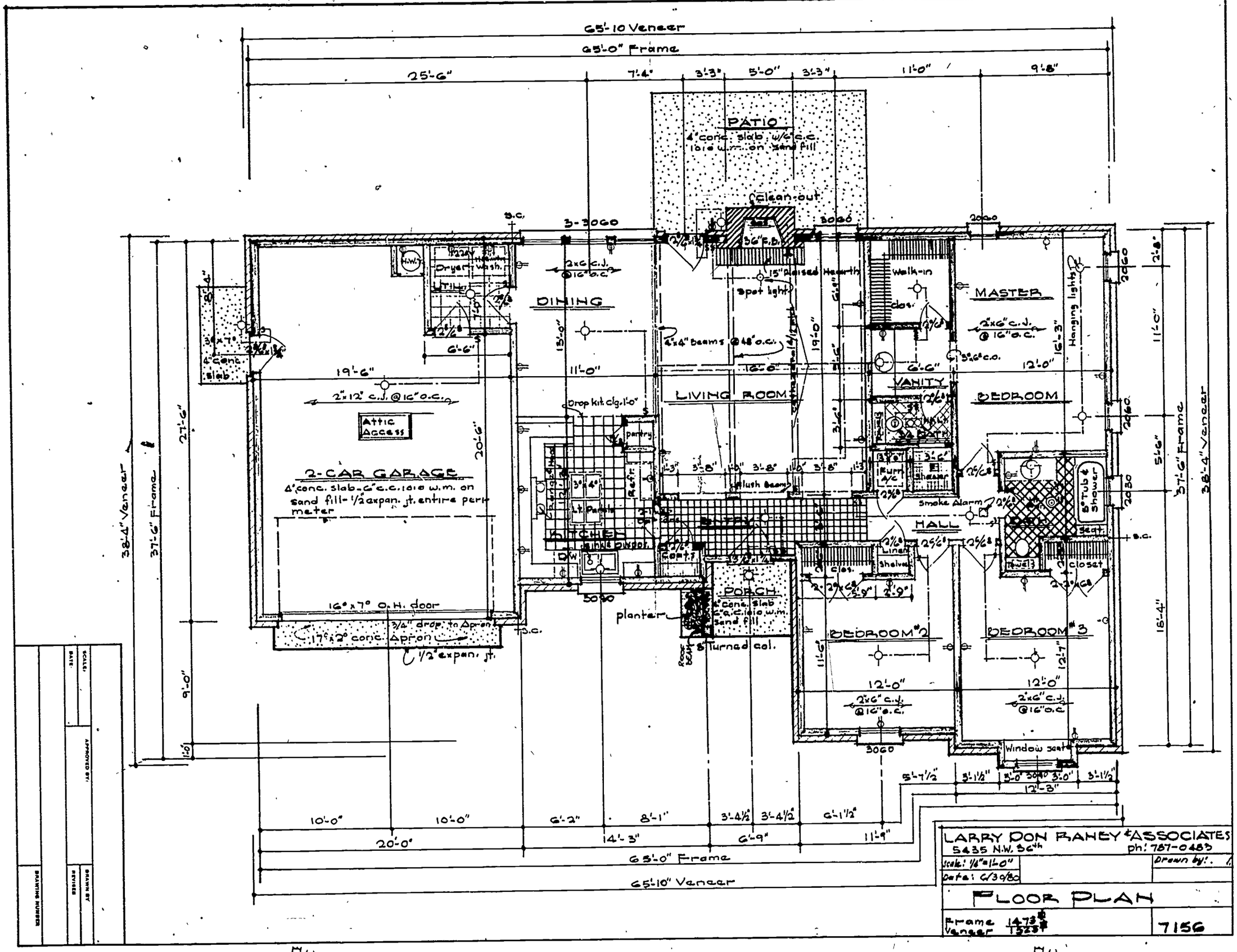
65'-10 Veneer
65'-0" Frame
25'-6"
7'-4"
3'-3"
5'-0"
3'-3"
11'-0"
9'-8"
PATIO
4" conc. slab w/6" c.c. 10/10 w.m. on sand fill
Clean-out
3-3060
3060
2060
36" F.D.
15" Raised Hearth
Spot light
Walk-in clos.
MASTER
2"x6" c.j. @ 16" o.c.
Hanging lights
2060
2060
2060
2060
2-6" c.o.
12'-0"
16'-3"
11'-0"
2'-8"
5'-6"
37'-6" Frame
38'-4" Veneer
Dryer
Wash.
H.W.
Tile
2"x6" c.j. @ 16" o.c.
DINING
13'-0"
4"x4" beams @ 48" o.c.
19'-0"
6'-6"
3'-6"
6'-6"
VANITY
BEDROOM
3'-6" c.o.
3"x7"
4" conc. slab
19'-6"
11'-0"
16'-0"
2"x12" c.j. @ 16" o.c.
Attic Access
Drop kit. clg. 1'-0"
LIVING ROOM
Pantry
Refr.
Range
Lt. Panels
3" 4"
3'-8"
1'-0"
3'-8"
Flush beams
Furn. A/C
Shower
Smoke Alarm
8" Tub & Shower
Seat
HALL
Linen Shelves
Closet
Towels
Closet
2-CAR GARAGE
4" conc. slab-6" c.c. 10/10 w.m. on sand fill-1/2" expan. jt. entire perimeter
20'-6"
27'-6"
38'-4" Veneer
37'-6" Frame
9'-0"
1'-0"
KITCHEN
Sink & Disposal
D.W.
Range Hood
Comb. F.
3060
16" x 7" O.H. door
3/4" drop to Apron
17" x 2" conc. Apron
1/2" expan. jt.
planter
PORCH
4" conc. slab 6" c.c. 10/10 w.m. sand fill
8" Turned col.
Roof Beam
BEDROOM #2
BEDROOM #3
12'-0"
2"x6" c.j. @ 16" o.c.
12'-0"
2"x6" c.j. @ 16" o.c.
3060
Window seat
16'-4"
12'-7"
11'-6"
5'-7½"
3'-1½"
3'-0"
3060
3'-0"
3'-1½"
12'-3"
10'-0"
10'-0"
6'-2"
8'-1"
3'-4½"
3'-4½"
6'-1½"
20'-0"
14'-3"
6'-9"
11'-9"
65'-0" Frame
65'-10" Veneer
LARRY DON RANEY & ASSOCIATES
5435 N.W. 36th
ph: 787-0483
Scale: 1/8"=1'-0"
Date: 6/30/80
Drawn by:
FLOOR PLAN
Frame 1473
Veneer 1523
7156
SCALE:
DATE:
APPROVED BY:
DRAWN BY
REVISED
DRAWING NUMBER

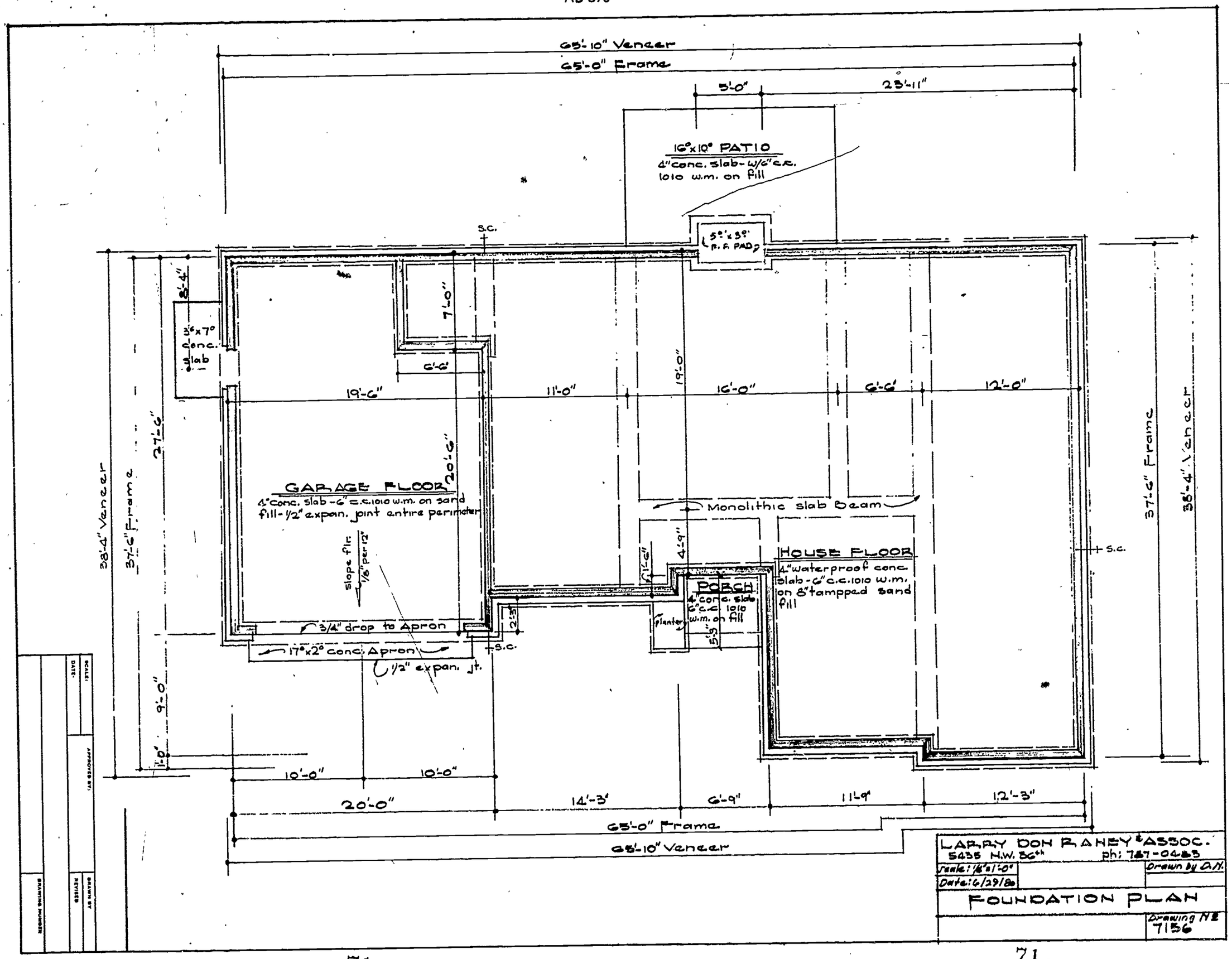
65'-10" Veneer
65'-0" Frame
5'-0"
23'-11"
16'x10' PATIO
4" conc. slab - w/6" c.c. 1010 w.m. on fill
S.C.
5'x3' R.F. PAD
3'-4"
3'x7' conc. slab
7'-0"
6'-6"
19'-6"
11'-0"
19'-0"
16'-0"
6'-6"
12'-0"
27'-6"
38'-4" Veneer
37'-6" Frame
20'-6"
GARAGE FLOOR
4" conc. slab - 6" c.c. 1010 w.m. on sand fill - 1/2" expan. joint entire perimeter
slope flr. 1/8" per 12"
Monolithic slab Beam
4'-9"
1'-6"
HOUSE FLOOR
4" waterproof conc. slab - 6" c.c. 1010 w.m. on 8" tamped sand fill
PORCH
4" conc. slab 6" c.c. 1010 w.m. on fill
planter
5'-9"
2'-3"
3/4" drop to Apron
17'x2' conc. Apron
1/2" expan. jt.
S.C.
9'-0"
1'-0"
10'-0"
10'-0"
20'-0"
14'-3"
6'-9"
11'-9"
12'-3"
65'-0" Frame
65'-10" Veneer
37'-6" Frame
38'-4" Veneer
LARRY DON RANEY & ASSOC.
5435 N.W. 36th
ph: 787-0483
Scale: 1/8" = 1'-0"
Date: 6/29/80
Drawn by D.N.
FOUNDATION PLAN
Drawing No 7156
SCALE:
DATE:
APPROVED BY:
REVISED
DRAWN BY
DRAWING NUMBER

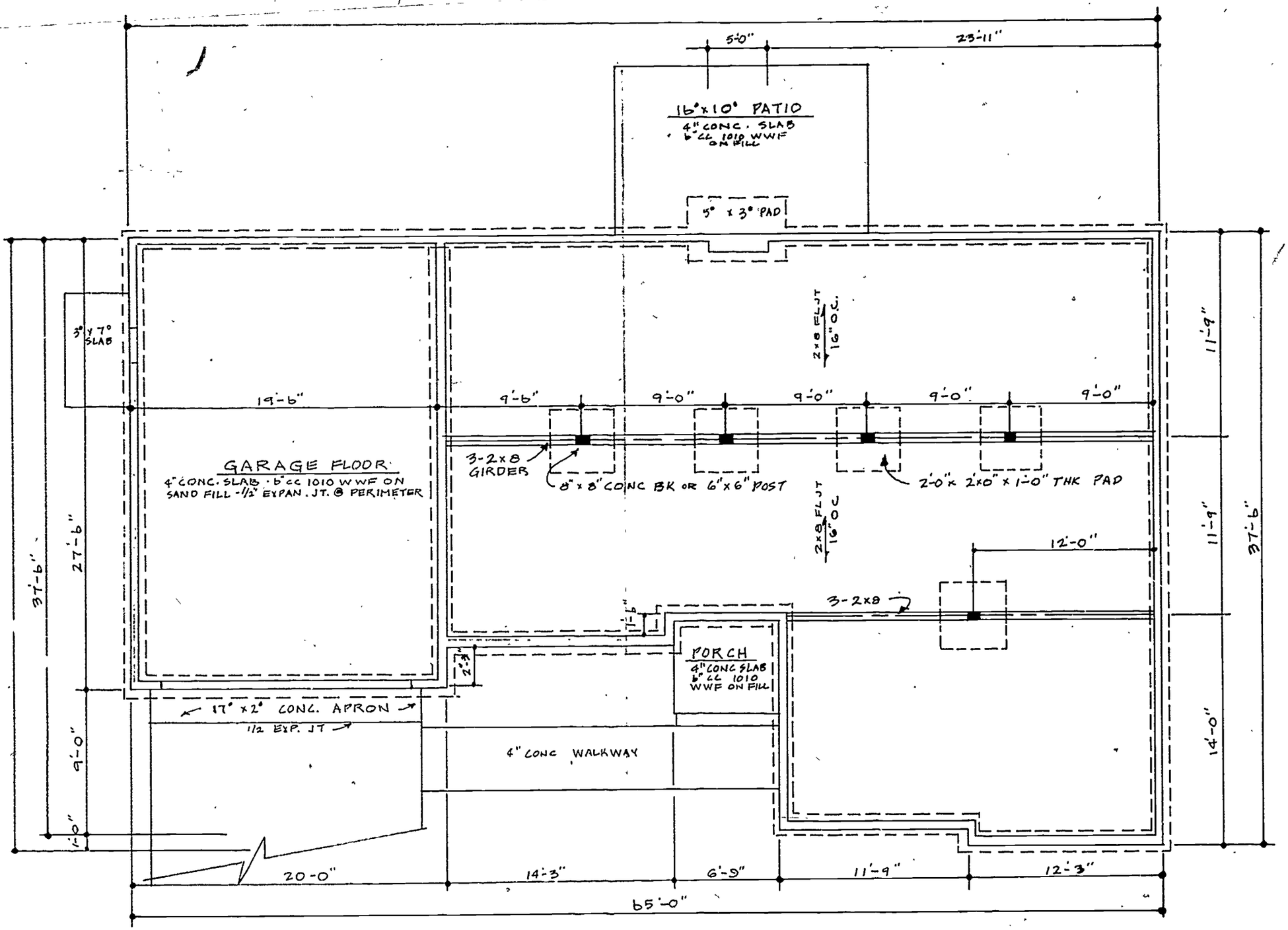

		DRBY RD
FOUNDATION PLAN - WOOD		
		715b

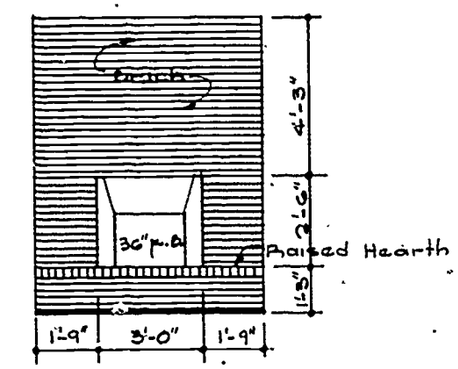

FIREPLACE

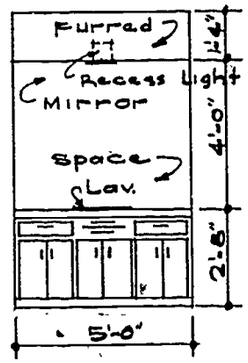

VANITY

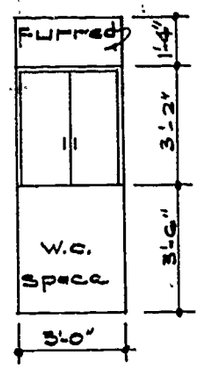

TOWELS

MASTER BATH

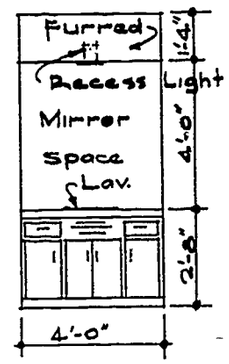

VANITY

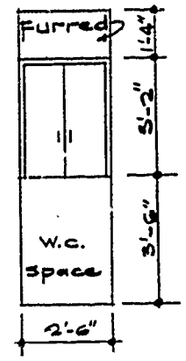

TOWELS

HALL BATH

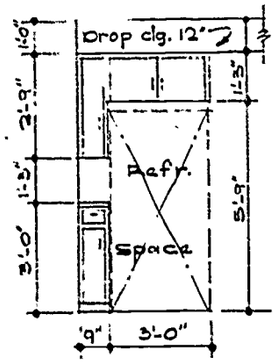

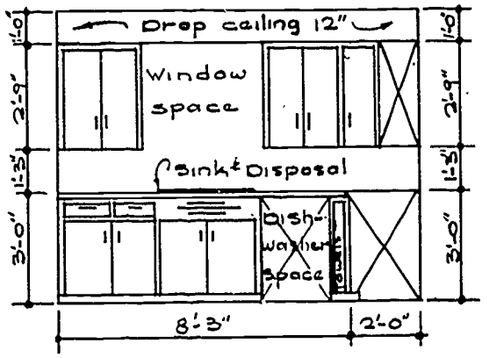

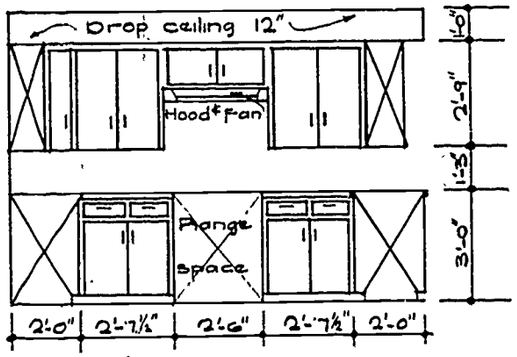

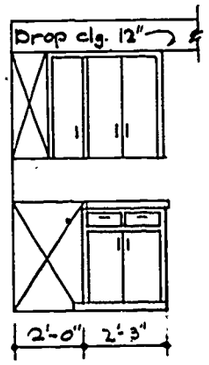

KITCHEN CABINETS

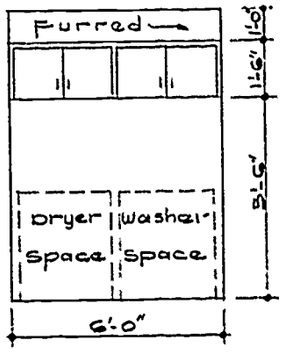

UTILITY CAB'S.

LARRY DON RANEY & ASSOCIATES
5435 N.W. 36th ph: 787-0483
Scale: 3/8"=1'-0" Drawn by: D.N.
Date: 6/28/8
INERIOR DETAILS
7156

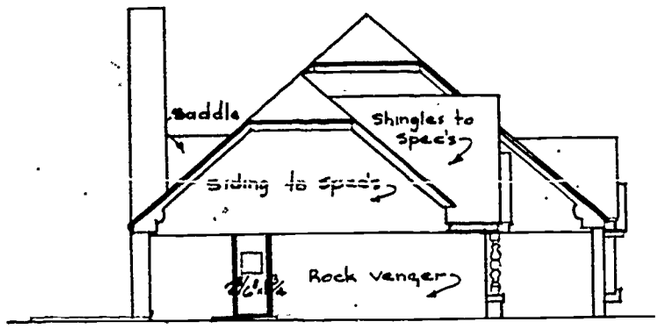

LEFT SIDE

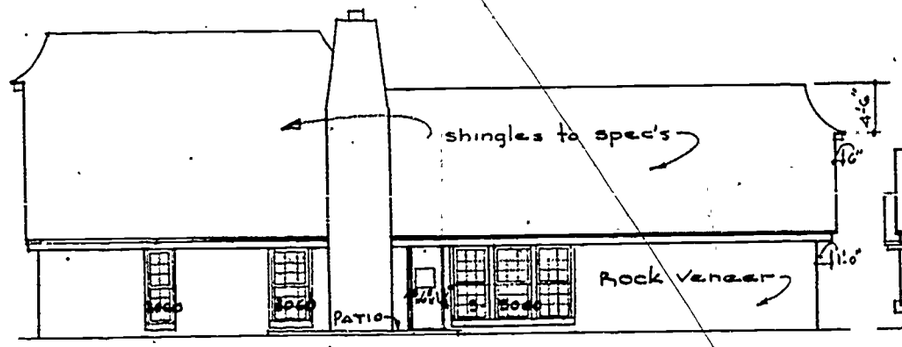

REAR
scale: 1/8" = 1'-0"

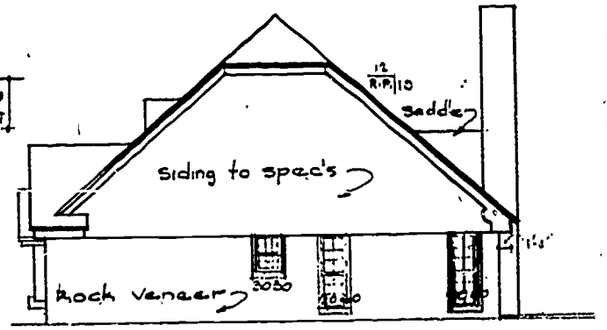

RIGHT SIDE

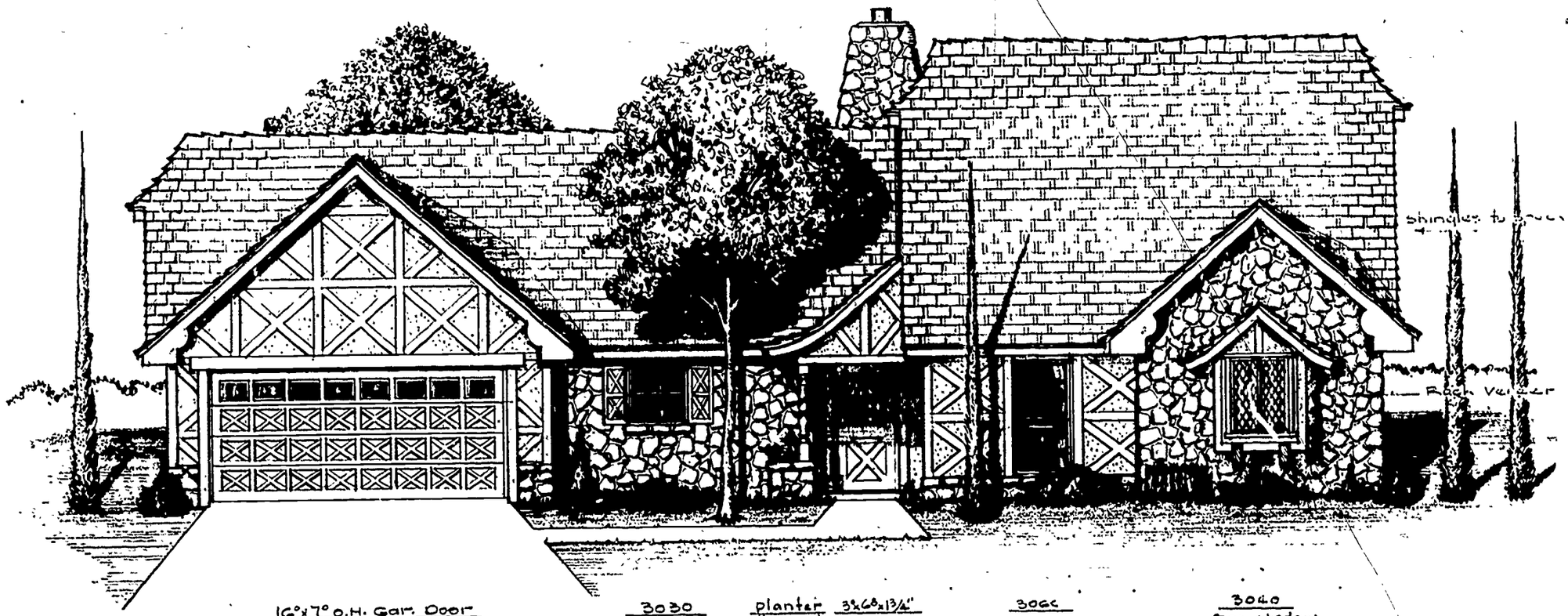

16'x7' o.h. Gar. Door

3030

planter w/turned col.

3 x 68 x 13 1/4"

3066

3040 Box window

FRONT ELEVATION
scale: 1/4" = 1'-0"

LARRY DON RANEY & ASSOCIATES OKLA. CITY, OKLA. - 787-0489		
6/30/80	LDR	
71,		PLAN NO. 7156-A

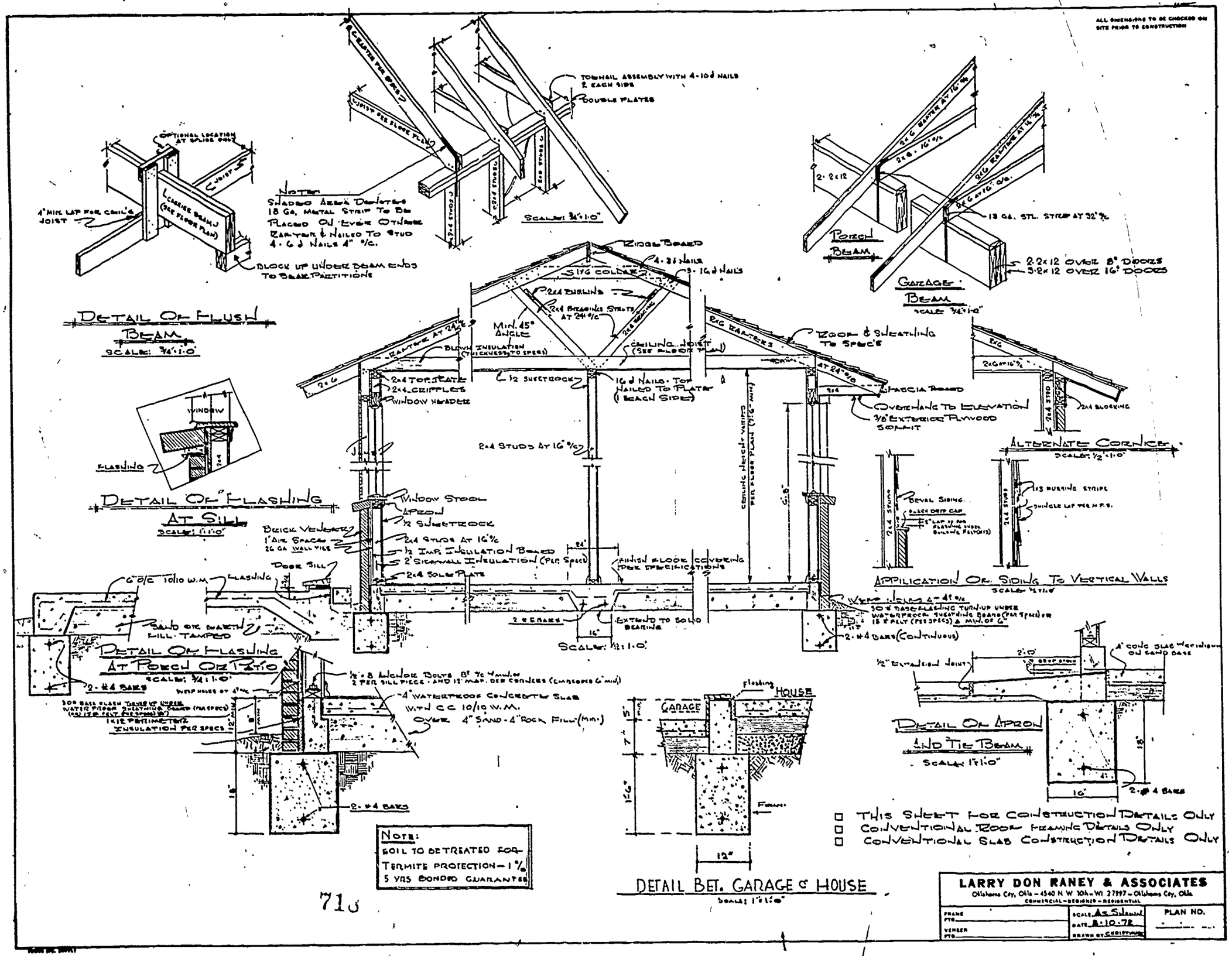
ALL DIMENSIONS TO BE CHECKED ON SITE PRIOR TO CONSTRUCTION
Detail Of Flush Beam
Scale: 3/4"=1'-0"
Optional Location At Splice Only
Joist
4" Min. Lap For Ceil'g Joist
Girder Beam (See Floor Plan)
Block Up Under Beam Ends To Bear Partitions
Note
Shaded Area Denotes 18 Ga. Metal Strip To Be Placed On Every Other Rafter & Nailed To Stud 4-6d Nails 4" o/c.
Joist See Floor Plan
Double Plates
Scale: 3/4"=1'-0"
Porch Beam
2-2x12
2x6 Rafter At 16" o/c
2x8 @ 16" o/c
2x6 Rafter At 16" o/c
2x6 @ 16" o/c
18 Ga. Stl. Strip At 32" o/c
Garage Beam
2-2x12 Over 8' Doors
3-2x12 Over 16' Doors
Scale: 3/4"=1'-0"
Ridge Board
4-8d Nails
3-16d Nails
Collar
2x4 Purlins
2x4 Bracing Struts At 24" o/c
Min. 45° Angle
Rafter At 24" o/c
Blown Insulation (Thickness To Spec)
Ceiling Joist (See Floor Plan)
Roof & Sheathing To Spec'
2x6
2x4 Top Plate
2x4 Cripples
Window Header
1/2 Sheetrock
16d Nails Top Nailed To Plate (1 Each Side)
2x4 Studs At 16" o/c
Fascia Board
Overhang To Elevation
3/8" Exterior Plywood Soffit
2x4 Blocking
Alternate Cornice
Scale: 1/2"=1'-0"
Window
Flashing
Detail Of Flashing At Sill
Scale: 1"=1'-0"
Window Stool
Apron
1/2 Sheetrock
Brick Veneer
1" Air Space
26 Ga. Wall Tie
2x4 Studs At 16" o/c
1/2 Imp. Insulation Board
2" Sidewall Insulation (Per Spec)
2x4 Sole Plate
Door Sill
Finish Floor Covering Per Specifications
Ceiling Height Varies Per Floor Plan
Bevel Siding
Shingle Lap Per M.R.S.
Application Of Siding To Vertical Walls
Scale: 1/2"=1'-0"
6" o/c 10/10 W.M.
Sand Or Earth Fill Tamped
Detail Of Flashing At Porch Or Patio
Scale: 3/4"=1'-0"
2-#4 Bars
Weep Holes At 4' o/c
Insulation Per Specs
1/2"x8 Anchor Bolts 8' o/c 4 Min. 2 Per Sill Piece & 12" Max. Per Corners (Embedded 6" Min.)
4" Waterproof Concrete Slab With C.C. 10/10 W.M. Over 4" Sand-4" Rock Fill (Min.)
2-#4 Bars
2-#4 Bars
Extend To Solid Bearing
Scale: 1/2"=1'-0"
Weep Holes At 48" o/c
30# Base Flashing Turn-Up Under Waterproof Sheathing Board (Per Spec) Or 15# Felt (Per Specs) A Min. Of 6"
2-#4 Bars (Continuous)
Garage
House
Flashing
Detail Bet. Garage & House
Scale: 1"=1'-0"
1/2" Expansion Joint
4" Conc. Slab Reinforced On Sand Base
Detail Of Apron And Tie Beam
Scale: 1"=1'-0"
2-#4 Bars
Note:
Soil To Be Treated For Termite Protection - 1%
5 Yrs Bonded Guarantee
THIS SHEET FOR CONSTRUCTION DETAILS ONLY
CONVENTIONAL ROOF FRAMING DETAILS ONLY
CONVENTIONAL SLAB CONSTRUCTION DETAILS ONLY
LARRY DON RANEY & ASSOCIATES
Oklahoma City, Okla. - 4540 N.W. 10th - WI 2-7997 - Oklahoma City, Okla.
COMMERCIAL - DESIGNED - RESIDENTIAL
FRAME
PTD.
VENEER
PTD.
SCALE As Shown
DATE 8-10-78
DRAWN BY CHRISTYANNE
PLAN NO.

NOTE: FLOOR SUPPLY REGISTERS TO BE PLACED TO ALLOW SPACE FOR DRAPES & CURTAINS

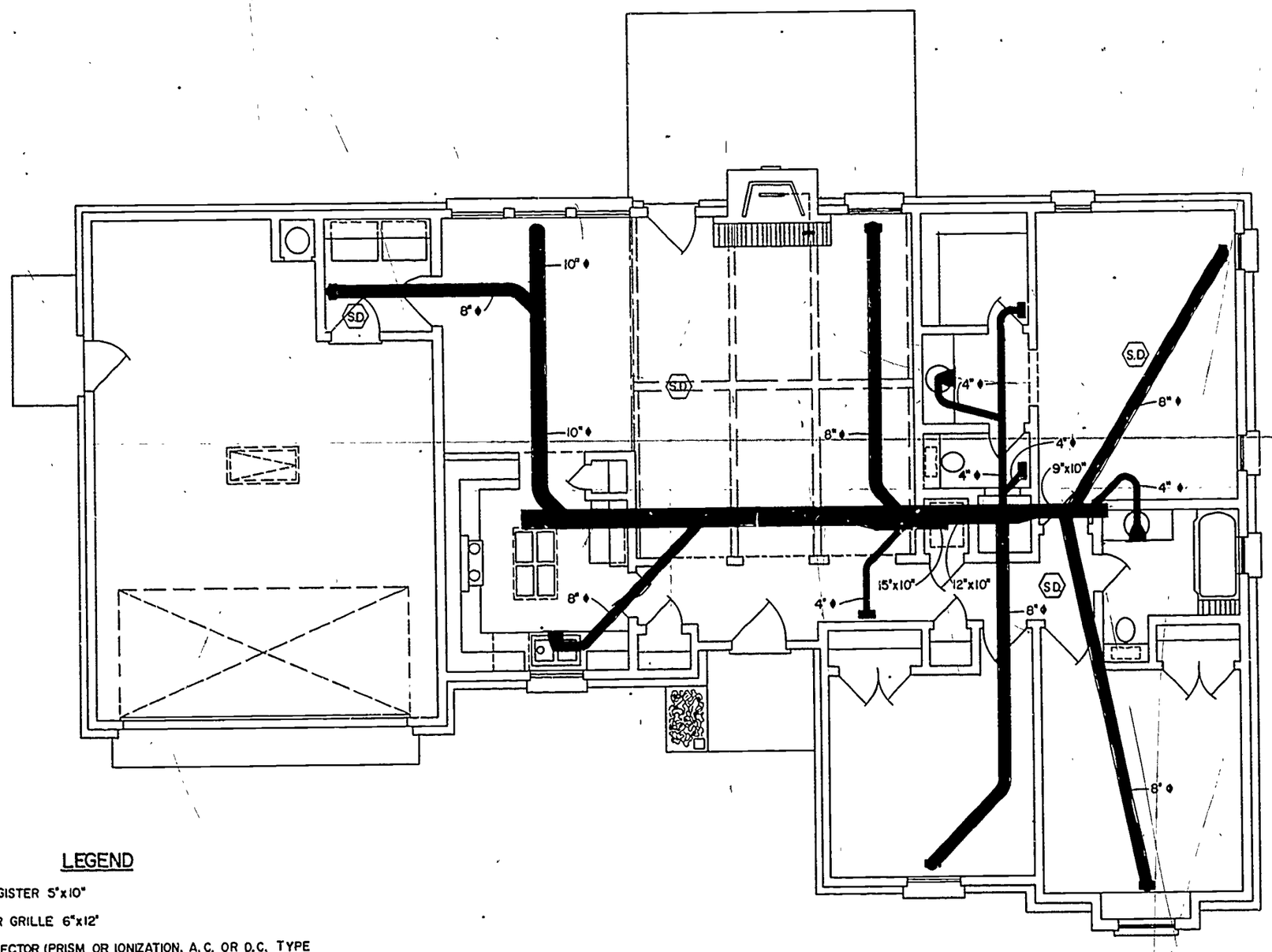

LEGEND

- SUPPLY REGISTER 5"x10"
- RETURN AIR GRILLE 6"x12"
- (S.D.) SMOKE DETECTOR (PRISM OR IONIZATION, A.C. OR D.C. TYPE WITH EMERGENCY LIGHT)
- EXHAUST FAN
- DUCT SUPPLY
- DUCT RETURN

P.O. BOX 132	B. J. YANCEY ENTERPRISES PHONE: (405) 684-7826	HUNTER, OKLA. 74640
SCALE: 1/4" = 1'-0"	DRAWN BY: MARALENE G. NORRIS	
DATE: 29 MARCH 82	CK. BY: BJY	APP. BY:
SUPPLY AIR FLOOR PLAN		
FRAME 1473 ф VENEER 1523 ф		7156 - 1776

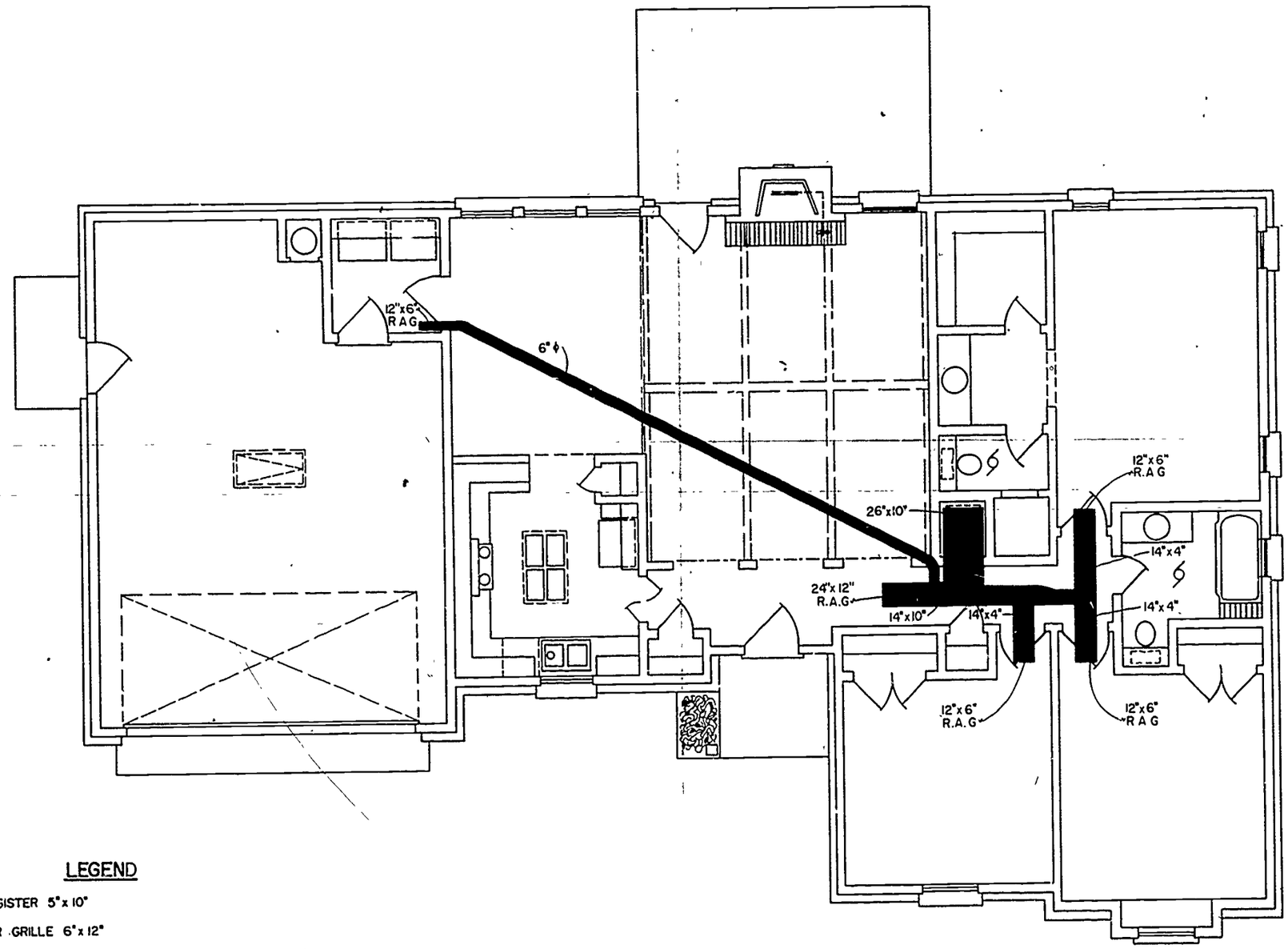

LEGEND

- SUPPLY REGISTER 5"x 10"
- RETURN AIR GRILLE 6"x 12"
- SD SMOKE DETECTOR (PRISM OR IONIZATION, A.C. OR D.C. TYPE WITH EMERGENCY LIGHT)
- EXHAUST FAN
- DUCT SUPPLY
- DUCT RETURN

P.O. BOX 132	B. J. YANCEY ENTERPRISES PHONE. (405) 684-7826	HUNTER, OKLA 74640
SCALE: 1/4"=1' 0"	DRAWN BY: MARALENE G. NORRIS	
DATE: 29 MARCH 82	CK. BY: BJY	APP. BY:
RETURN AIR FLOOR PLAN		
FRAME 1473 ϕ VENEER 1523 ϕ		7156 - 1776