DOCUMENT RESUME

ED 220 631 CE 033 516

AUTHOR Foutes, William
TITLE Diesel Mechanics: Fuel Systems.
INSTITUTION Mid-America Vocational Curriculum Consortium, Stillwater, Okla.
PUB DATE 82
NOTE 284p.; For related documents see ED 149 162 and CE 033 514-515.
AVAILABLE FROM Mid-America Vocational Curriculum Consortium, 1515 West Sixth Avenue, Stillwater, OK 74074.

EDRS PRICE MF01 Plus Postage. PC Not Available from EDRS.
DESCRIPTORS *Auto Mechanics; Behavioral Objectives; Curriculum Guides; *Diesel Engines; Job Skills; Learning Activities; Performance Tests; Postsecondary Education; Trade and Industrial Education; Transparencies
IDENTIFIERS *Fuel Systems

ABSTRACT

This publication is the third in a series of three texts for a diesel mechanics curriculum. Its purpose is to teach the concepts related to fuel injection systems in a diesel trade. The text contains eight units. Each instructional unit includes some or all of these basic components: unit and specific (performance) objectives, suggested activities for teachers and students, information sheets, transparency masters, assignment sheets, answers to assignment sheets, job sheets, pencil-paper and performance tests, and answers to tests. Introductory materials include description of unit components, instructional/task analysis (psychomotor and cognitive skills to be learned), listing of needed tools and equipment, and reference list. Unit titles are Introduction to Fuel Injection Systems, Fuel System Components, Distributor Type Injection Pump, In-Line Injection Pump, Unit Injector, Pressure Time (PT) Fuel Systems, Injection Nozzles, and Governors. (YLB)

DIESEL MECHANICS : FUEL SYSTEMS

by

William Foutes*

revised by

Bill Guynes
Joe Mathis
Marvin Kukuk

Developed by the

Mid-America Vocational Curriculum Consortium, Inc.

Printed by

Oklahoma State Department of Vocational and Technical Education

Stillwater, Oklahoma 74074

TABLE OF CONTENTS

FOREWORD

The Mid-America Vocational Curriculum Consortium (MAVCC) was organized for the purpose of developing instructional materials for its eleven member states. All member states participate in establishing annual development priorities, and the need for curriculum in diesel mechanics truly reflects regional needs.

Diesel Engine Mechanics was originally produced in 1977. Since that time, technology as related to equipment and methods has changed. To keep abreast of these changes, MAVCC has revised this book into three shorter publications.

Diesel Mechanics: Fuel Systems is the third publication of a series of three texts dedicated to a diesel mechanics curriculum. Although it can be taught as a single text, it is designed to be used in conjunction with *Diesel Mechanics. Electrical Systems* and *Diesel Mechanics: Fundamentals* to provide continuity in student training. Other MAVCC publications entitled *Hydraulics* and *Power Trains* will broaden the scope of the diesel training. Another use of this book is to supplement the training of an auto mechanics student who may later be working on diesel powered automobiles. It is hoped that this effort will provide industry with truly well trained technicians for the world of diesel and the varied skills it demands.

The success of this publication is due, in large part, to the capabilities of the personnel who worked with its development. The technical writers have numerous years of industry as well as teaching experience. Assisting them in their efforts were representatives of each of the member states who brought with them technical expertise and the experience related to the classroom and to the trade. To assure that the materials would parallel the industry environment and be accepted as a transportable basic teaching tool, organizations and industry representatives were involved in the developmental phases of the manual. Appreciation is extended to them for their valuable contributions to the manual.

Instructional materials in this publication are written in terms of student performance using measurable objectives. This is an innovative approach to teaching that accents and augments the teaching/learning process. Criterion referenced evaluation instruments are provided for uniform measurement of student progress. In addition to evaluating recall information, teachers are encouraged to evaluate the other areas including process and product as indicated at the end of each instructional unit.

It is the sincere belief of the MAVCC personnel and all those members who served on the committees that this publication will allow the students to become better prepared and more effective members of the work force.

Merle Rudebusch, Chairman
Board of Directors
Mid-America Vocational
Curriculum Consortium

PREFACE

Both the development and revision of instructional materials in diesel mechanics have been rewarding efforts because of the talented people who planned and wrote the materials. From the team of teachers, industry representatives, and trade and industrial staff members whose combined years of experience in the diesel trade total over 260 years has come a series of texts which should offer diesel mechanics students an excellent opportunity for learning required skills.

The title of this third book of the series, *Diesel Mechanics: Fuel Systems* indicates that this book is dedicated to teaching the concepts related to fuel injection systems in a diesel trade. Naturally, this book is designed to be used with other MAVCC books related to diesel. These include *Diesel Mechanics: Electrical Systems, Diesel Mechanics: Fundamentals, Power Trains,* and *Hydraulics*.

As complex as some mechanical activities are, the MAVCC format presents the procedures in logically ordered objectives that facilitate a comfortable learning rate. The format also frees the instructor to concentrate on reinforcing classroom instruction with films, field trips, and other activities that serve to maintain student interest at a high level and motivate students to learn and do.

Despite careful planning and editing, we know that the text may perhaps contain a typographical error or two. Letting us know when you find such items will be a great help in improving the product before reprint time. But most of all, your input about the major elements in the book will be valuable help for changing or adding objectives when the materials are again revised and updated.

We respond to your suggestions, and we hope the quality of the MAVCC materials related to diesel will serve a positive role in the classroom and provide industry with the skilled people that are so needed.

Ann Benson
Executive Director
Mid-America Vocational
Curriculum Consortium

ACKNOWLEDGEMENTS

Appreciation is extended to those individuals who contributed their time and talents to the development of *Diesel Mechanics: Fuel Systems.*

The contents of this publication were planned and reviewed by:

Mid-America Vocational Curriculum Consortium Committee

Cliff Olson	Devils Lake, North Dakota
Dean Carter	Malvern, Arkansas
John Dagel	Watertown, South Dakota
Charles Cramton	West Wego, Louisiana
Ken Condor	Aurora, Colorado
Ted Modica	Albuquerque, New Mexico
Gary Snelson	Springfield, Missouri
David Goodacre	Drumright, Oklahoma
Jim Thompson	Beloit, Kansas
Bill August	Milford, Nebraska
Darwin Hutzell	Austin, Texas

Thanks are extended to Ron Simmons for representing teacher education on this committee and to Donnie Tuminello for representing state supervisory personnel.

Special thanks are extended to Harlan Gjoraas of the Kearns Machinery Company and Doug MacDonald of Technical Systems, Inc. for their representation of industry on the committee and to the numerous other companies who provided references and technical materials.

Gratitude is expressed to Jane Huston and P.J. Colbert for editing and to Mary Kellum and Dan Fulkerson for their assistance in editing and proofreading.

The Graphics Division of the Oklahoma State Department of Vocational and Technical Education is deserving of much credit for typing, providing artwork, and printing this publication.

Special appreciation is extended to those who served on the original advisory committee representing the many MAVCC states.

USE OF THIS PUBLICATION

Instructional Units

Diesel Mechanics: Fuel Systems includes eight units. Each instructional unit includes some or all of the basic components of a unit of instruction: performance objectives, suggested activities for teachers and students, information sheets, assignment sheets, job sheets, visual aids, tests, and answers to the test. Units are planned for more than one lesson or class period of instruction.

Careful study of each instructional unit by the teacher will help to determine:

A. The amount of material that can be covered in each class period
B. The skills which must be demonstrated
   1. Supplies needed
   2. Equipment needed
   3. Amount of practice needed
   4. Amount of class time needed for demonstrations
C. Supplementary materials such as pamphlets or filmstrips that must be ordered
D. Resource people who must be contacted

Objectives

Each unit of instruction is based on performance objectives. These objectives state the goals of the course, thus providing a sense of direction and accomplishment for the student.

Performance objectives are stated in two forms: unit objectives, stating the subject matter to be covered in a unit of instruction; and specific objectives, stating the student performance necessary to reach the unit objective.

Since the objectives of the unit provide direction for the teaching-learning process, it is important for the teacher and students to have a common understanding of the intent of the objectives. A limited number of performance terms have been used in the objectives for this curriculum to assist in promoting the effectiveness of the communication among all individuals using the materials.

Following is a list of performance terms and their synonyms which may have been used in this material:

Name	Identify	Describe
Label	Select	Define
List in writing	Mark	Discuss in writing
List orally	Point out	Discuss orally
Letter	Pick out	Interpret
Record	Choose	Tell how
Repeat	Locate	Tell what
Give	Label	Explain

Order	Distinguish	Construct
Arrange	Discriminate	Draw
Sequence	Differentiate	Make
List in order		Build
Classify		Design
Divide		Formulate
Isolate		Reproduce
Sort		Transcribe
		Reduce
		Increase
		Figure

Demonstrate	Additional Terms Used	
Show your work	Evaluate	Prepare
Show procedure	Complete	Make
Perform an experiment	Analyze	Read
Perform the steps	Calculate	Tell
Operate	Estimate	Teach
Remove	Plan	Converse
Replace	Observe	Lead
Turn off/on	Compare	State
(Dis) assemble	Determine	Write
(Dis) connect	Perform	

Reading of the objectives by the student should be followed by a class discussion to answer any questions concerning performance requirements for each instructional unit.

Teachers should feel free to add objectives which will fit the material to the needs of the students and community. When teachers add objectives, they should remember to supply the needed information, assignment and/or job sheets, and criterion tests.

Suggested Activities for the Instructor

Each unit of instruction has a suggested activities sheet outlining steps to follow in accomplishing specific objectives. Duties of instructors will vary according to the particular unit; however, for best use of the material they should include the following: provide students with objective sheet, information sheet, assignment sheets, and job sheets; preview filmstrips, make transparencies, and arrange for resource materials and people; discuss unit and specific objectives and information sheet; give test. Teachers are encouraged to use any additional instructional activities and teaching methods to aid students in accomplishing the objectives.

Information Sheets

Information sheets provide content essential for meeting the cognitive (knowledge) objectives in the unit. The teacher will find that the information sheets serve as an excellent guide for presenting the background knowledge necessary to develop the skill specified in the unit objective.

Students should read the information sheets before the information is discussed in class. Students may take additional notes on the information sheets.

Transparency Masters

Transparency masters provide information in a special way. The students may see as well as hear the material being presented, thus reinforcing the learning process. Transparencies may present new information or they may reinforce information presented in the information sheets. They are particularly effective when identification is necessary.

Transparencies should be made and placed in the notebook where they will be immediately available for use. Transparencies direct the class's attention to the topic of discussion. They should be left on the screen only when topics shown are under discussion.

Job Sheets

Job sheets are an important segment of each unit. The instructor should be able to and in most situations should demonstrate the skills outlined in the job sheets. Procedures outlined in the job sheets give direction to the skill being taught and allow both student and teacher to check student progress toward the accomplishment of the skill. Job sheets provide a ready outline for students to follow if they have missed a demonstration. Job sheets also furnish potential employers with a picture of the skills being taught and the performances which might reasonably be expected from a person who has had this training.

Assignment Sheets

Assignment sheets give direction to study and furnish practice for paper and pencil activities to develop the knowledges which are necessary prerequisites to skill development. These may be given to the student for completion in class or used for homework assignments. Answer sheets are provided which may be used by the student and/or teacher for checking student progress.

Test and Evaluation

Paper-pencil and performance tests have been constructed to measure student achievement of each objective listed in the unit of instruction. Individual test items may be pulled out and used as a short test to determine student achievement of a particular objective. This kind of testing may be used as a daily quiz and will help the teacher spot difficulties being encountered by students in their efforts to accomplish the unit objective. Test items for objectives added by the teacher should be constructed and added to the test.

Test Answers

Test answers are provided for each unit. These may be used by the teacher and/or student for checking student achievement of the objectives.

DIESEL MECHANICS: FUEL SYSTEMS
INSTRUCTIONAL/TASK ANALYSIS

JOB TRAINING: What the Worker Should Be Able to Do (Psychomotor)	RELATED INFORMATION: What the Worker Should Know (Cognitive)

UNIT I: INTRODUCTION TO FUEL INJECTION SYSTEMS

1. Terms and definitions
2. Functions of fuel injection systems
3. Types of fuel injection systems
4. Methods of injecting fuel
5. Facts about fuel injection systems

UNIT II: FUEL SYSTEM COMPONENTS

1. Terms and definitions
2. Parts and their functions
3. Fuel tank maintenance problems
4. Types of fuel lines and their purposes
5. Purpose of fuel transfer pump
6. Stages of fuel filtration
7. Fuel filters and separators
8. Operation of dual filters

UNIT III: DISTRIBUTOR TYPE INJECTION PUMP

1. Terms and definitions
2. Parts and their functions
3. Operating principles
4. Fuel flow
5. Charging and discharge cycle operations
6. Delivery valve operation

JOB TRAINING: What the Worker Should Be Able to Do (Psychomotor)	RELATED INFORMATION: What the Worker Should Know (Cognitive)
	7. Return fuel oil circuit functions
	8. Functions of end plate
	9. Optional features of distributor type pump
10. Remove a distributor type pump from an engine	
11. Bench test a distributor type pump	
12. Install a distributor type pump on an engine	

UNIT IV: IN-LINE INJECTION PUMP

	1. Terms and definitions
	2. Parts of in-line pump
	3. Fuel flow from supply tank to delivery
	4. Purpose of hand primer
	5. Purpose of fuel transfer pump
	6. Operation of injection pump
	7. Parts and design features of pumping element
	8. Operation of control rack and sleeve
	9. Purpose of delivery valve
	10. Plunger and rack positions
	11. Tools for overhauling in-line injection pump
12. Remove an in-line pump	
13. Overhaul an in-line pump	
14. Clean and inspect in-line pump components	
15. Reassemble an in-line pump	

JOB TRAINING: What the Worker Should Be Able to Do (Psychomotor)	RELATED INFORMATION: What the Worker Should Know (Cognitive)
16. Reassemble the R.Q.V. governor	
17. Bench test an in-line pump	

UNIT V: UNIT INJECTOR

	1. Terms and definitions
	2. Parts of unit injector and their functions
	3. Fuel flow through unit injector system
	4. Differences between needle valve and crown valve
	5. Differences between no injection and full injection
6. Remove unit injector from engine	
7. Disassemble a unit injector	
8. Assemble a unit injector	
9. Test a unit injector	
10. Install a unit injector	

UNIT VI: PT FUEL SYSTEMS

	1. Terms and definitions
	2. Parts of PT fuel system
	3. Functions of PT pump assembly units
	4. Operation of PT injection system
	5. Function of pulsation damper
	6. Operation of mechanical governor
	7. Types of PT injectors
	8. Operational steps of PT injectors and their descriptions

JOB TRAINING: What the Worker Should Be Able to Do (Psychomotor)	RELATED INFORMATION: What the Worker Should Know (Cognitive)
9. Remove and install flange type injectors	
10. Remove and install PT (Type B, C, D, and top stop) injectors	
11. Adjust an injector plunger and valves using the torque method	
12. Install a PT-R fuel pump and adjust high and low engine idle	
13. Test and adjust a PT-G fuel pump	
14. Adjust an injector using the dial indicator method	

UNIT VII: INJECTION NOZZLES

	1. Terms and definitions
	2. Functions of injection nozzle
	3. Moving parts in injection nozzle
	4. Common types of nozzle valves
	5. Nozzle characteristics
	6. Operation of injection nozzle
	7. Nozzle opening pressure adjustment
8. Remove, service, and test an injection nozzle	
9. Install an injection nozzle	
10. Isolate a faulty injection nozzle	

UNIT VIII: GOVERNORS

	1. Terms and definitions
	2. Purposes of governor
	3. Types of governors using flyweights

JOB TRAINING: What the Worker Should Be Able to Do (Psychomotor)

12. Adjust a limiting speed mechanical governor and injector rack control

RELATED INFORMATION: What the Worker Should Know (Cognitive)

4. Differences between mechanical and hydraulic governors
5. Types of mechanical and hydraulic governors
6. Functions of governors
7. Characteristics of governors
8. Operation of governor on load increase and decrease
9. Position of flyweights for load increase or decrease
10. Characteristics of isochronous governor
11. Characteristics of limiting speed mechanical governor

TOOLS AND MATERIALS

(NOTE. This is an alphabetized list of tools and materials needed to complete the job sheets in this text.)

Appropriate service manual
Appropriate service tool kit
Basic hand tool set, including metric
Calibrating nozzles adjusted to pump manufacturer's specifications
Calibrating oil, as recommended
Clean diesel fuel
Clean line plugs
Clean pans
Clean parts tray
Clean vise
Clean work area
Clean work bench
Cleaning solvent
Comparator injector tester or appropriate calibrator injector tester
Crocus cloth
Cummins engine, C.I.D. series - V-378, V-504, V-555, or VT-555
Cummins engine using PT-R fuel pump
Deep well socket
Distributor type pump
Drive shaft installation tool
Feeler gauge
Fuel pipe socket
Grease
Idle adjusting tool
Injection line - 1/16" I.D. x 20" length
Injection line - 3/32" I.D. x 20" length
Injector nut socket wrench
Injector-spray tip driver
Injector tester
Injector tube bevel reamer
Injector vise and rack freeness tester
Manufacturer's specifications
Needle valve fuel injector
Nozzle tester
Oil can, hand type
Pry bar
PT-G fuel pump
PT-R fuel pump, properly calibrated
Pump specification sheet
Pump test stand
Pump tools
Safety glasses
Shipping caps
Shop towels (lint-free)
Solution for washing pump
Tachometer, hand type
Tachometer, remote type

Test stand adapters
Test stand manual
Torque wrench
Torque wrench, inch-pounds
Torque wrench, foot-pounds
Typical tools as recommended by appropriate manufacturer

(NOTE: The tool numbers listed below are International Harvester.)

SE-2119--Rack gauge holder
SE-2121--Dial indicator (inch reading)
SE-2339--Wrench, holding, drive flange
SE-2340--Remover, governor flyweight damper
SE-2341--Holder, tappet
SE-2342--Gauge, camshaft protrusion
SE-2343--Holder, dial indicator
SE-2344--Remover and installer, camshaft cylindrical nut
SE-2345--Remover and installer, tappet
SE-2346--Remover and installer, barrel plunger
SE-2347--Wrench, tappet adjusting
SE-2348--Wrench, governor spring adjusting
SE-2349--Remover and installer, governor spring and adjusting screw
SE-2351--Fixture, pump holding

10

REFERENCES

(NOTE. This is an alphabetized list of references used in completing this text.)

Dagel, John F. *Diesel Engine Repair.* New York: John Wiley and Sons, Inc., 1982.

Detroit Diesel Allison, Service Manual. Detroit. Division of General Motors Corporation, 1974.

Foutes, William A. *Diesel Engine Mechanics.* Stillwater, OK. Mid-America Vocational Curriculum Consortium, 1977.

Fuel System. Fuel Injection Pump - Robert Bosch "A" Type for DV-462B 2nd DV-550B Engines. Chicago: International Harvester Co.

Fundamentals of Service: Engines. Fifth Edition. Moline, IL. Deere and Company, 1980.

Kates, Edgar J., and Luck, William E. *Diesel and High Compression Gas Engines.* Third Edition. Chicago: American Technical Society, 1974.

Robert Bosch Corporation. Bulletin No. 221103. 4131 A Directors Row, Houston, TX.

Roosa Master. Operation and Instructional Manual: Model DP Pump. Hartford, CT: Stanadyne/Hartford Division/Roosa Master.

Schulz, Erich J. *Diesel Mechanics.* New York. Gregg Division, McGraw-Hill Book Company, 1977

Service Bulletin No. 3379011-01: Injector Plunger and Valve Adjustments. Columbus, IN: Cummins Engine Company, Inc., December, 1975.

Service Bulletin No. 3379071-02. Injectors, All Types. Columbus, IN: Cummins Engine Company, Inc., December, 1975.

Service Bulletin No. 3379084-02: Fuel Pump PT Rebuilding. Columbus, IN: Cummins Engine Company, 1980.

Service Bulletin No. 3379101-00. PT Fuel Pump Calibration. Columbus, IN: Cummins Engine Company, Inc., December, 1975.

Service Bulletin No. 983535. Fuel Pump PT Rebuilding. Columbus, IN. Cummins Engine Company, Inc., 1975.

Service Bulletin No. 983725: Calibration of PT-G Pumps. Columbus, IN. Cummins Engine Company, Inc., 1975.

Service Manual, Detroit Diesel Engines. Detroit: Detroit Diesel Allison, 1975.

Technical Manual: John Deere Fuel Injection Equipment - Robert Bosch. Moline, IL: Deere and Company, April 1974.

Toboldt, William K. *Diesel. Fundamentals, Service, Repair.* South Holland, IL: Goodheart-Willcox Company, Inc., 1980.

INTRODUCTION TO FUEL INJECTION SYSTEMS
UNIT I

UNIT OBJECTIVE

After completion of this unit, the student should be able to select major functions of a fuel injection system and list methods of injecting fuel using a pump and injection nozzle. This knowledge will be evidenced by scoring 85 percent on the unit test.

SPECIFIC OBJECTIVES

After completion of this unit, the student should be able to:

1. Match terms related to fuel injection systems with their correct definitions.
2. Select major functions of a fuel injection system.
3. Name two types of fuel injection systems.
4. Complete a list of methods of injecting fuel using the pump and injection nozzle.
5. Select true statements concerning facts about fuel injection systems.

INTRODUCTION TO FUEL INJECTION SYSTEMS
UNIT I

SUGGESTED ACTIVITIES

I. Provide student with objective sheet.

II. Provide student with information sheet.

III. Discuss unit and specific objectives.

IV. Discuss information sheet.

V. Make a display of the different types of fuel injection systems.

VI. Demonstrate the spray patterns of various injectors.

VII. Emphasize safety procedures to follow when working with fuel injectors.

VIII. Take a field trip to a fuel injection shop.

IX. Give test.

INSTRUCTIONAL MATERIALS

I. Included in this unit:

A. Objective sheet

B. Information sheet

C. Test

D. Answers to test

II. References:

A. Kates, Edgar J. and Luck, William E. *Diesel and High Compression Gas Engines*. Third Edition. Chicago: American Technical Society, 1974.

B. Schulz, Erich J. *Diesel Mechanics*. New York: Gregg Division, McGraw-Hill Book Company, 1977.

C. Toboldt, William K. *Diesel Fundamentals, Service, Repair*. South Holland, IL: Goodheart-Willcox Company, Inc., 1980.

D. Dagel, John F. *Diesel Engine Repair*. New York: John Wiley and Sons, Inc., 1982.

INTRODUCTION TO FUEL INJECTION SYSTEMS
UNIT I

INFORMATION SHEET

I. Terms and definitions

A. Injection--Method of forcing fuel into a chamber for combustion

B. Transfer pump--Mechanical device that brings fuel from the fuel tank to the injection pump

C. Fuel injection pump--Times, measures, and delivers fuel under pressure to the injection nozzles

D. Ignition delay--Period of time from injection to actual ignition

E. Flash point--When fuel is heated to a point where it gives off a flammable vapor

F. Ignition--Combustion of fuel mixture in the combustion chamber

G. Cetane number--The rating of a diesel fuel's ignition

H. Atomize--Break down into small particles

I. Unit injector--Pump and fuel injection nozzle combined into one unit

J. Fuel injection nozzle--Atomizes and distributes fuel evenly into the combustion chamber

II. Major functions of fuel injection system

A. Supplies the correct quantity of fuel

B. Times the fuel delivery

C. Controls the delivery rate

D. Atomizes the fuel

E. Distributes fuel evenly throughout the combustion chamber

III. Types of fuel injection systems

A. Common rail system

B. Jerk pump system

(NOTE: Almost all modern diesel systems are of this type.)

1. Unit injector

2. In-line

INFORMATION SHEET

3 Multiplunger in common housing

4 Single plunger, distributor type

IV Pump and injection nozzle methods for injecting fuel

A Individual pump and injection nozzle for each cylinder

(NOTE Some engine and or pump manufacturers who use this system are American Bosch, Robert Bosch, C A V and Sims)

B Combined pump and injection nozzle for each cylinder (unit injector type)

(NOTE Some engine and or pump manufacturers who use this system are General Motors Corporation and Cummins Engine Company.)

C Pump in common housing, injection nozzle for each cylinder (in-line type)

(NOTE. Some engine and or pump manufacturers who use this system are Robert Bosch, American Bosch, C.A V , Sims, and Caterpillar)

D One pump serving injection nozzles for several cylinders (distributor type)

(NOTE Some engine and or pump manufacturers who use this system are Roosa Master, American Bosch, Robert Bosch, C.A.V., and D.P.A.)

V Facts about fuel injection systems

A The first injection systems used air to force coal dust into the combustion chamber

B The first fuel injector used air to force fuel into the combustion chamber

C AIR IS ALWAYS COMPRESSED BEFORE FUEL IS INJECTED

D Fuel must be evenly distributed throughout the cylinder

E All fuel injectors are mechanically operated

F Fuel is injected by very high pressure--2500 3000 psi or more

INTRODUCTION TO FUEL INJECTION SYSTEMS
UNIT I

NAME _____

TEST

1. Match the terms on the right with their correct definitions.

_____a. Method of forcing fuel into a chamber for combustion	1. Atomize
_____b. Mechanical device that brings fuel from the fuel tank to the injection pump	2. Injection
_____c. Times, measures, and delivers fuel under pressure to the injection nozzles	3. Fuel injection pump
_____d. Period of time from injection to actual ignition	4. Unit injector
_____e. When fuel is heated to a point where it gives off a flammable vapor	5. Ignition
_____f. Combustion of fuel mixture in the combustion chamber	6. Cetane number
_____g. The rating of a diesel fuel's ignition	7. Fuel injection nozzle
_____h. Break down into small particles	8. Flash point
_____i. Pump and fuel injection nozzle combined into one unit	9. Ignition delay
_____j. Atomizes and distributes fuel evenly into the combustion chamber	10. Transfer pump

2. Select major functions of a fuel injection system by placing an "X" in the appropriate blanks.

_____a. Supplies the correct quantity of fuel

_____b. Pulls the fuel from the pump

_____c. Returns fuel to the filters

_____d. Atomizes the fuel

_____e. Distributes fuel evenly throughout the combustion chamber

3. Name two types of fuel injection systems.

   a. _____

   b. _____

      1) Unit injector

      2) In-line

      3) Multi-plunger in common housing

      4) Single plunger, distributor type

4. Complete the following list of methods of injecting fuel using the pump and injection nozzle.

   a. _____ and injection nozzle for each cylinder

   b. _____ and injection nozzle for each cylinder

   c. Pump in common housing, injection nozzle for each cylinder

   d. _____ serving injection nozzles for several cylinders

5. Select true statements concerning facts about fuel injection systems by placing an "X" in the appropriate blanks.

   _____a. The first injection systems used air to force coal dust into the combustion chamber

   _____b. The first fuel injector used air to force fuel into the combustion chamber

   _____c. AIR IS ALWAYS COMPRESSED BEFORE FUEL IS INJECTED

   _____d. Air must be evenly distributed throughout the combustion chamber

   _____e. All fuel injectors are mechanically operated

   _____f. Fuel is injected by very low pressure--1000-1500 psi or less

INTRODUCTION TO FUEL INJECTION SYSTEMS
UNIT I

ANSWERS TO TEST

1. a. 2
   b. 10
   c. 3
   d. 9
   e. 8
   f. 5
   g. 6
   h. 1
   i. 4
   j. 7

2. a,d,e

3. a. Common rail system
   b. Jerk pump system

4. a. Individual pump
   b. Combined pump
   d. One pump

5. a, b, c, e

FUEL SYSTEM COMPONENTS
UNIT II

UNIT OBJECTIVE

After completion of this unit, the student should be able to name the major parts of a fuel system and match the parts to their functions. The student should also be able to distinguish between the operation of series and parallel dual filters. This knowledge will be evidenced by scoring 85 percent on the unit test.

SPECIFIC OBJECTIVES

After completion of this unit, the student should be able to:

1. Match terms related to fuel system components with their correct definitions.
2. Name six major parts of a fuel system.
3. Match the parts of a fuel system with their functions.
4. Name three fuel tank maintenance problems.
5. Match types of fuel lines with their purposes.
6. Select true statements concerning the purpose of a fuel transfer pump.
7. Name three types of filters used during stages of fuel filtration on a typical diesel fuel system.
8. Complete a list of statements concerning fuel filters and separators.
9. Distinguish between the operation of series and parallel dual filters.

FUEL SYSTEM COMPONENTS
UNIT II

SUGGESTED ACTIVITIES

I. Provide student with objective sheet.

II. Provide student with information sheet.

III. Make transparencies.

IV. Discuss unit and specific objectives.

V. Discuss information sheet.

VI. Show students different high pressure lines.

VII. Demonstrate safety precautions on high pressure lines.

VIII. Have a display of different types of filters.

IX. Give test.

INSTRUCTIONAL MATERIALS

I. Included in this unit:

A. Objective sheet

B. Information sheet

C. Transparency masters

1. TM 1--Fuel System Components
2. TM 2--Detroit Diesel Fuel System and Final Filter on Fuel Injector
3. TM 3--Types of Fuel Lines
4. TM 4--Stages of Fuel Filtration
5. TM 5--Water Separator and Primary Filter
6. TM 6--Agglomerator Filter
7. TM 7--Spin-On Fuel Filter
8. TM 8--Series Dual Fuel Filters

D. Test

E. Answers to test

II. References:

A. *Fundamentals of Service: Engines*. Fifth Edition. Moline, IL: Deere and Company, 1980.

B. Kates, Edgar J. and Luck, William E. *Diesel and High Compression Gas Engines*. Third Edition. Chicago: American Technical Society, 1974.

C. *Detroit Diesel Allison: Service Manual*. Detroit, MI: Division of General Motors Corporation, 1974.

D. Dagel, John F. *Diesel Engine Repair*. New York: John Wiley and Sons, Inc., 1982.

FUEL SYSTEM COMPONENTS
UNIT II

INFORMATION SHEET

I. Terms and definitions

A. Fuel lines--High and low pressure tubes that connect the fuel system

B. Primary filter--Filters out initial impurities

C. Secondary filter--The second filter in a fuel system; it has a finer filtering capacity

D. Final filter--Used as a safety factor, it collects anything that escapes other filters

E. Micron--A unit of measurement that is used to rate the efficiency of filters; one micron equals one millionth of a meter or 0.000039 inch

F. Fuel transfer pump--Moves fuel from fuel tank to fuel pump

G. Water separator--A cup or bowl usually at the bottom of the fuel filter that allows the heavier water to settle to the bottom to be drained off

II. Major parts of fuel system (Transparencies 1 and 2)

A. Fuel tank

B. Fuel transfer pump

C. Fuel filter

D. Fuel injection pump

E. Unit injector

F. Fuel injection nozzle

III. Functions of fuel system parts (Transparency 1)

A. Fuel tank--Stores fuel

B. Fuel filter--Cleans the fuel

C. Fuel transfer pump--Supplies fuel to injection pump at low pressure

D. Fuel injection pump--Times, measures, and delivers fuel under pressure to injection nozzles

E. Fuel injection nozzle--Atomizes and distributes fuel evenly into combustion chamber

F. Unit injector--Performs functions of both the injection pump and nozzle as one unit

INFORMATION SHEET

IV. Fuel tank maintenance problems

A Leaks

B. Condensation

C Dirt

V. Types of fuel lines and purposes (Transparency 3)

A. Return low pressure lines--Transfer leak-off fuel from injectors to tank or pump

(NOTE The lines can be made from various materials.)

B. Schedule 80 high pressure lines--Transfer fuel between injection pump and injector

C. Supply low pressure lines--Transfer fuel between tank and injection pump

VI. Purpose of fuel transfer pump

A. Draws fuel from supply tank through fuel filters

B. Forces fuel under low pressure through injection pump

VII. Stages of fuel filtration (Transparency 4)

A. First stage--Filter screen at tank or transfer pump

B. Second stage--Primary filter

C. Third stage--Secondary filter

VIII. Fuel filters and separators

A Fuel filter components (Transparency 6)

1. Cast aluminum head, has all fuel connections

2. Aluminum filter base, has sediment trap

3. Treated paper element

B Water separator and primary filter (Transparency 5)

1 Has no resistance to fuel flow

2. Separates water from fuel by specific gravity

INFORMATION SHEET

3. Has no moving parts

4. Is effective in freezing or waxing conditions

5. Can be drained of sediments

6. Mounted on suction side of the pump

C. Agglomerator filter (Transparency 6)

1. Uses single bolt for filter change

2. Water drains without dismantling

3. Fuel flows in the inlet and through the paper filter where it separates the impurities

D. Spin-on filter (Transparency 7)

1. Gasket is part of the filter

2. Easy to change for more serviceability

3. Has no resistance to fuel flow

4. Fuel flows in the inlet and through the paper filter where it separates the impurities

IX. Operation of dual filters (Transparency 8)

A. Series--All fuel flows through one filter before flowing through the other

B. Parallel--Part of the fuel goes through each filter

Fuel System Components

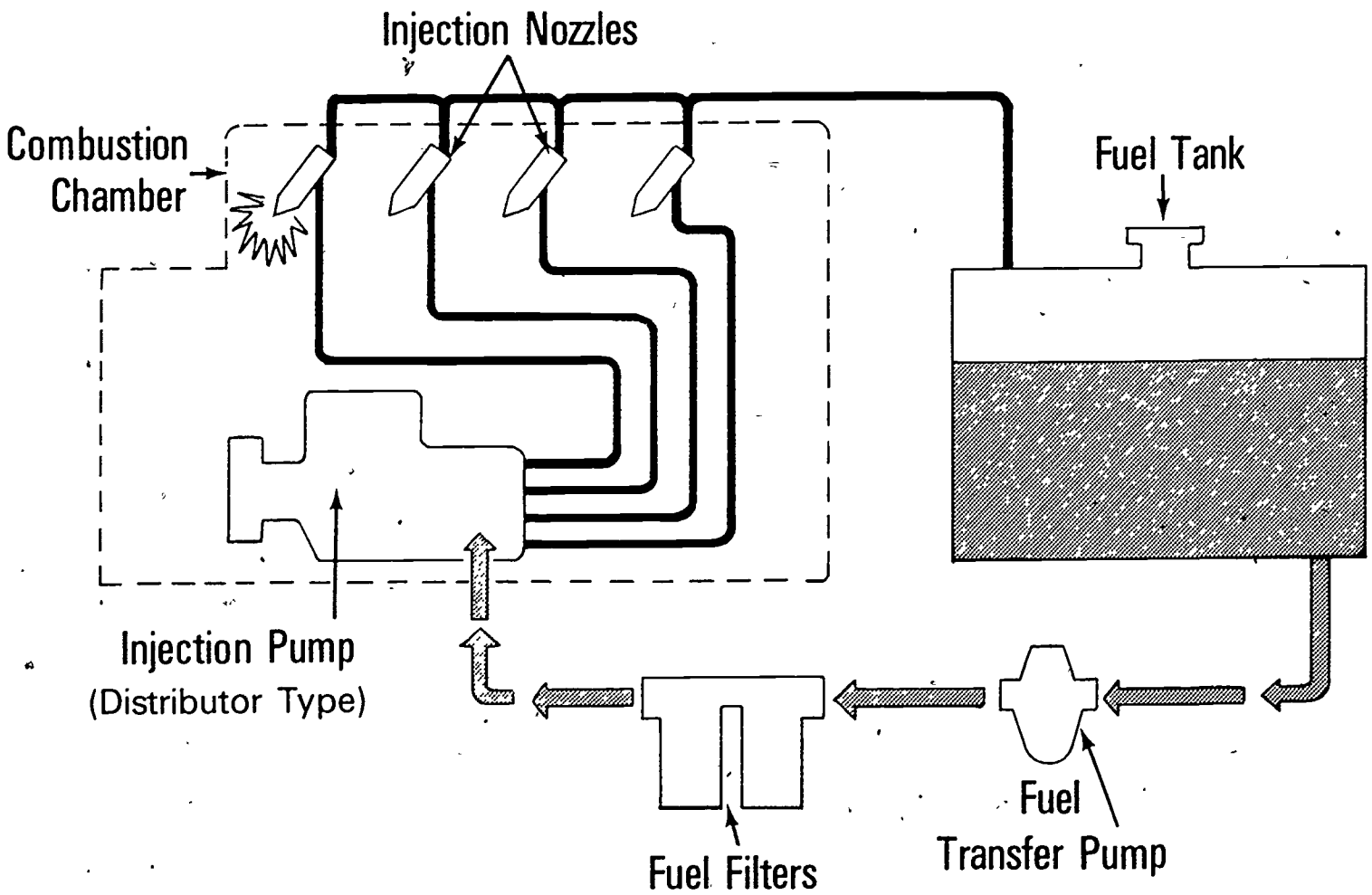

Detroit Diesel Fuel System and Final Filter on Fuel Injector

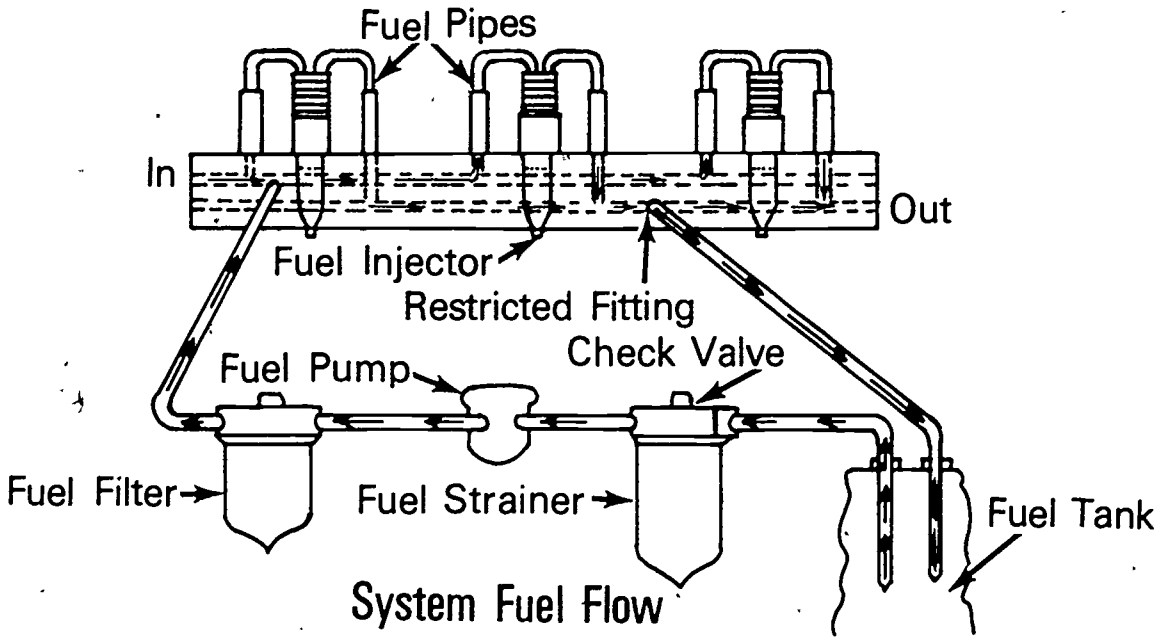

System Fuel Flow

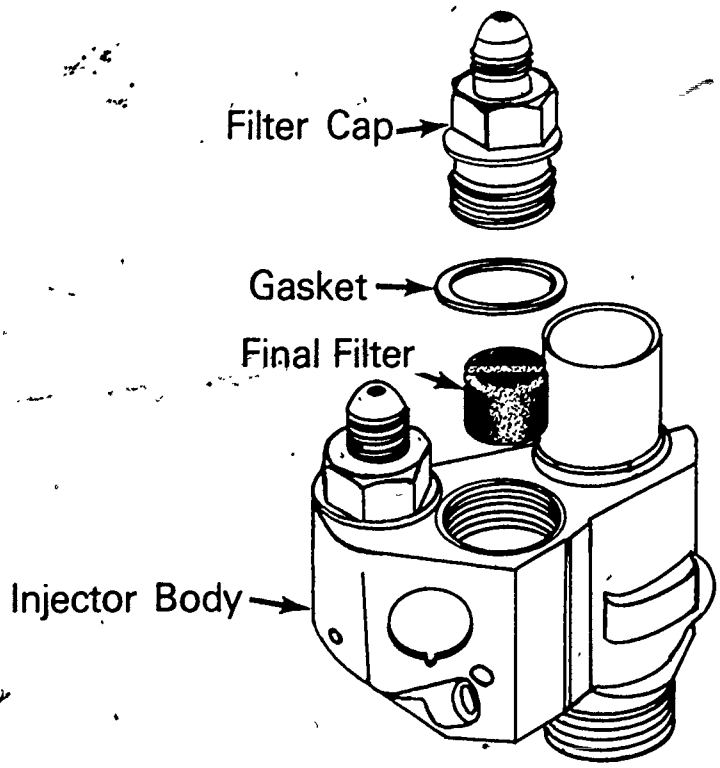

Location of Final Filter on Fuel Injector

Types of Fuel Lines

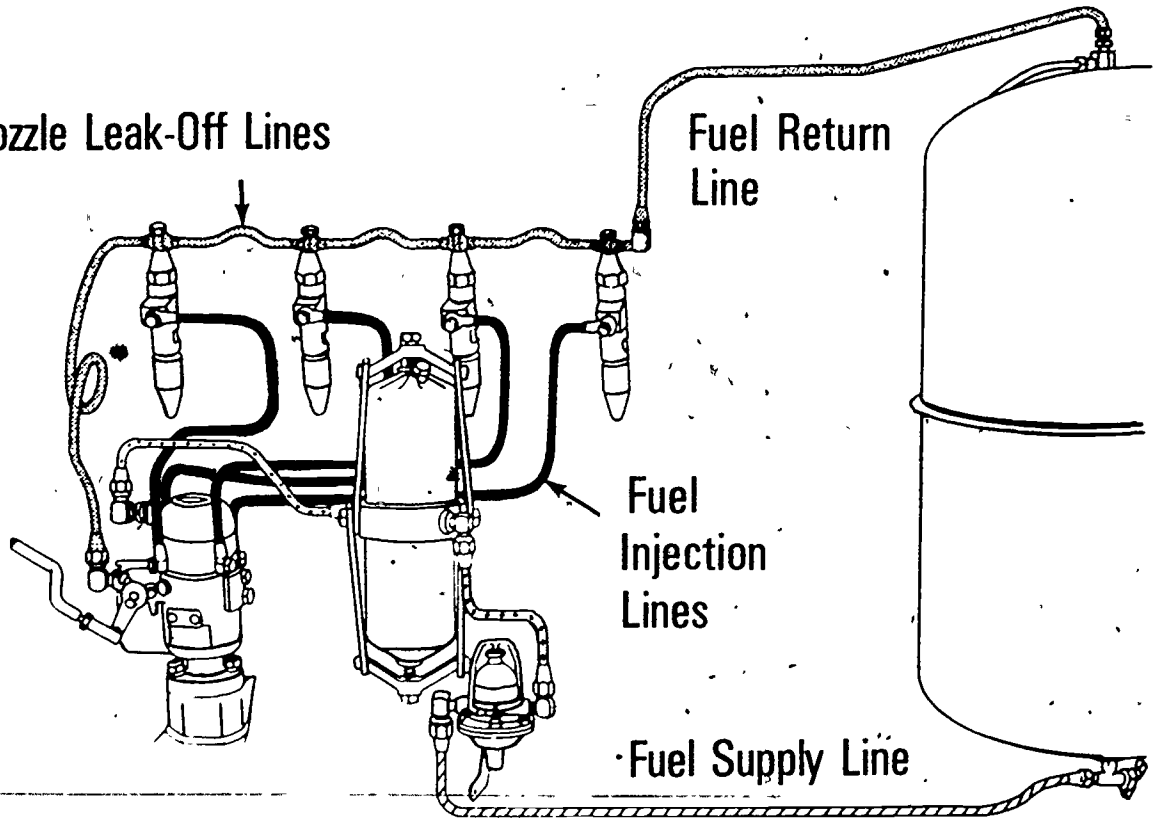

Very High Pressure Low Pressure No Pressure

Stages of Fuel Filtration

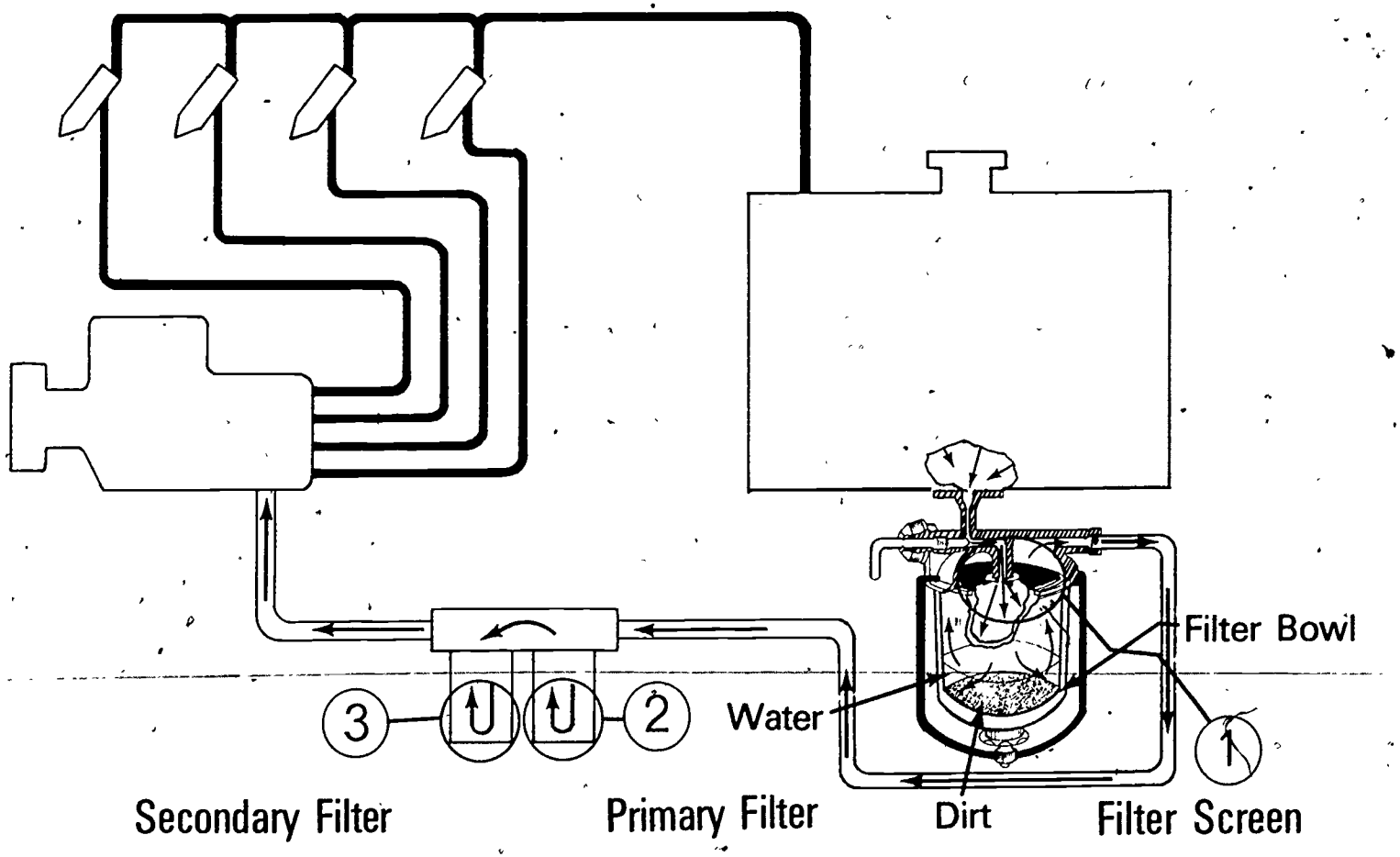

Water Separator and Primary Filter

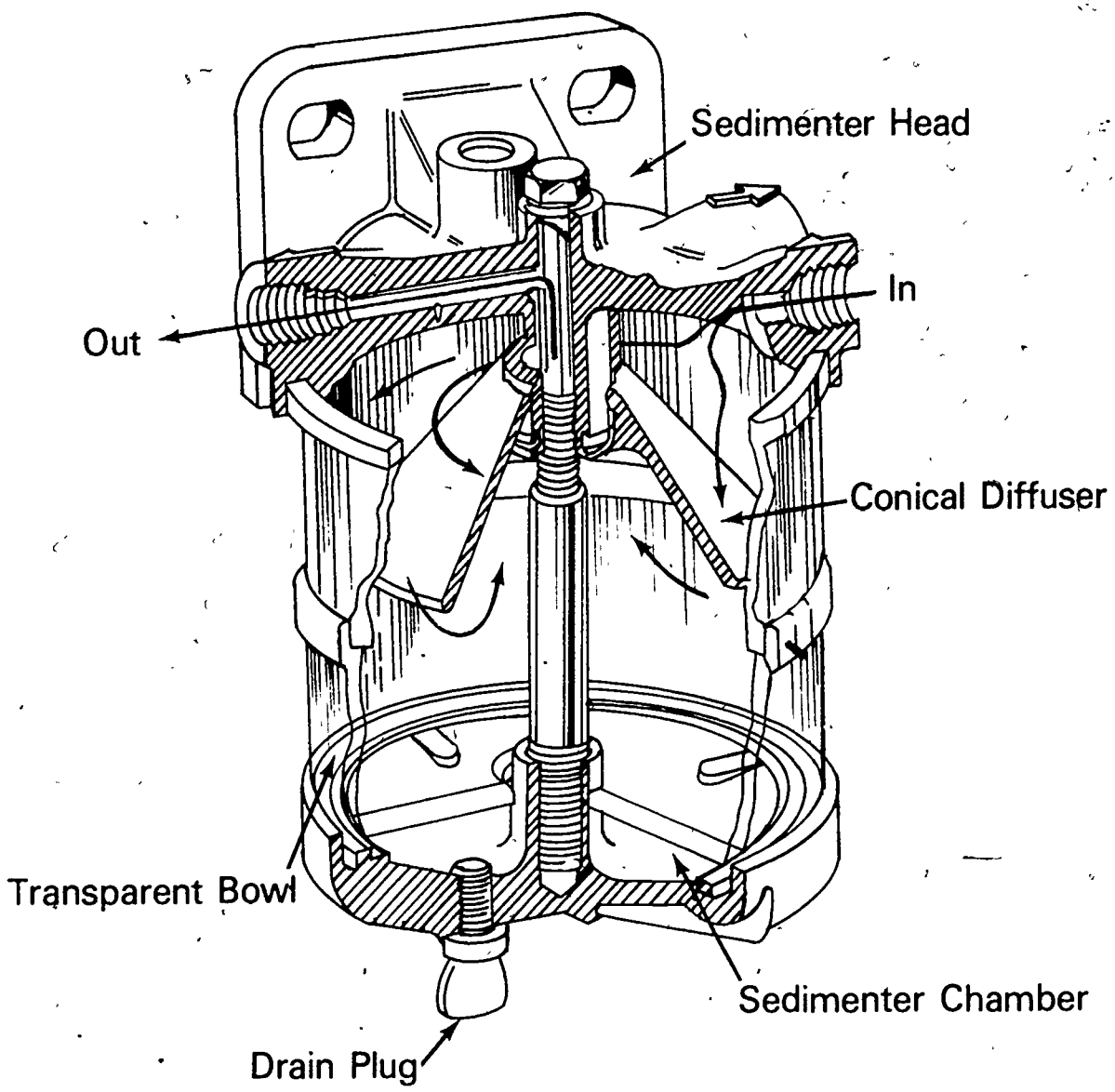

Agglomerator Filter

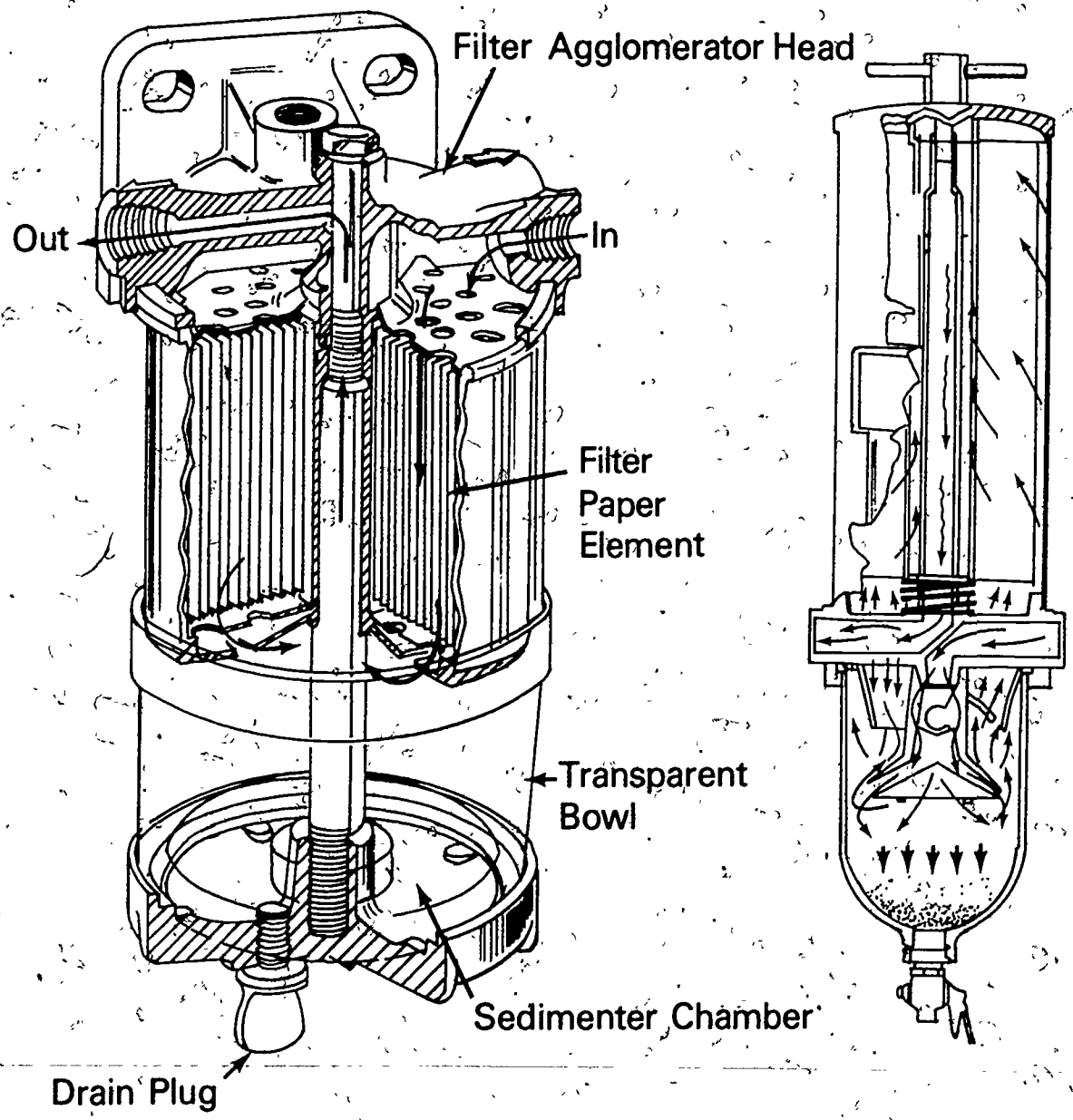

Spin-on Fuel Filter

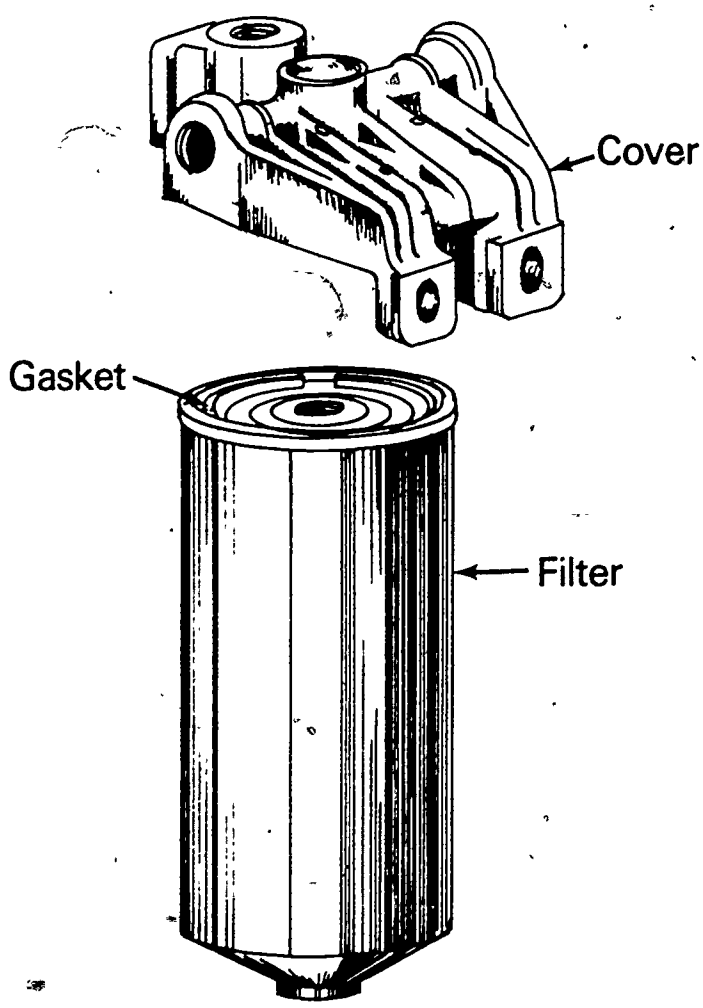

Series Dual Fuel Filters

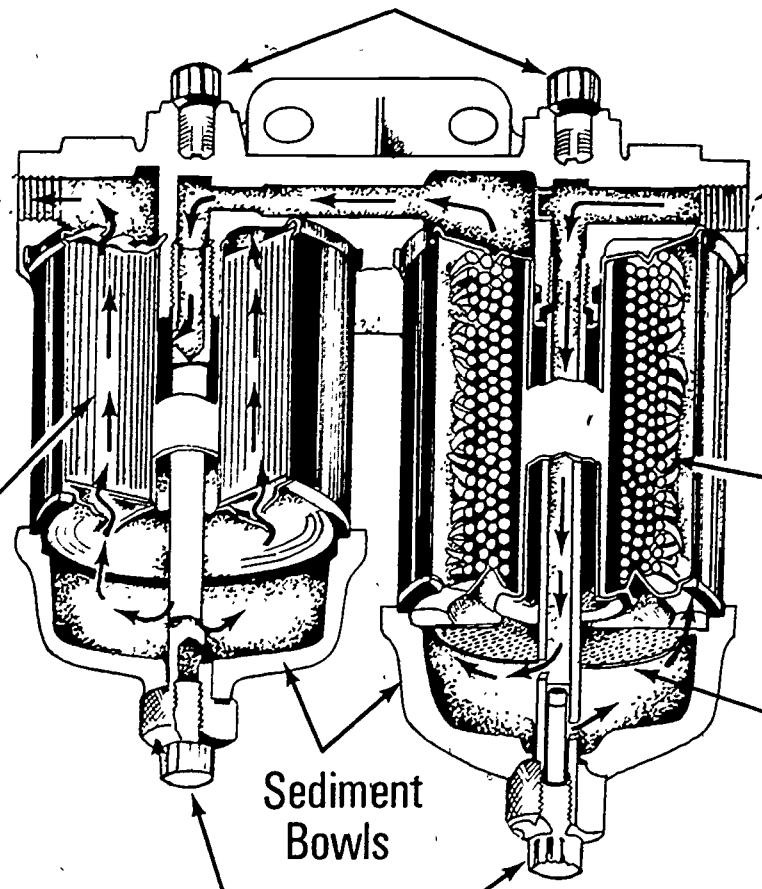

FUEL SYSTEM COMPONENTS
UNIT II

NAME _____

TEST

1. Match the terms on the right with their correct definitions.

_____a. High and low pressure tubes that connect the fuel system	1. Final filter
_____b. Filters out initial impurities	2. Micron
_____c. The second filter in a fuel system; it has a finer filtering capacity	3. Primary filter
_____d. Used as a safety factor, it collects anything that escapes other filters	4. Water separator
_____e. A unit of measurement that is used to rate the efficiency of filters; one of these units equals one millionth of a meter or 0.000039 inch	5. Fuel transfer pump
_____f. Moves fuel from fuel tank to fuel pump	6. Fuel lines
_____g. A cup or bowl usually at the bottom of the fuel filter that allows the heavier water to settle to the bottom to be drained off	7. Secondary filter

2. Name six major parts of a fuel system.

a. _____

b. _____

c. _____

d. _____

e. _____

f. _____

3. Match the parts of a fuel system on the right with their functions.

_____a. Stores fuel	1. Fuel transfer pump
_____b. Cleans the fuel	2. Fuel injection pump
_____c. Supplies fuel to injection pump at low pressure	3. Fuel filter

_____d. Times, measures, and delivers fuel under pressure to injection nozzles

_____e. Atomizes and distributes fuel evenly into combustion chamber

_____f. Performs functions of both the injection pump and nozzle as one unit

4. Fuel tank
5. Unit injector
6. Fuel injection nozzle

4. Name three fuel tank maintenance problems.

a. _____

b. _____

c. _____

5. Match types of fuel lines on the right with their purposes.

_____a. Transfer leak-off fuel from injectors to tank or pump

_____b. Transfer fuel between injection pump and injector

_____c. Transfer fuel between tank and injection pump

1. Supply low pressure lines
2. Return low pressure lines
3. Schedule 80 high pressure lines

6. Select true statements concerning the purpose of a fuel transfer pump by placing an "X" in the appropriate blanks.

_____a. Draws fuel from supply tank through fuel filters

_____b. Forces fuel under high pressure through injection pump

7. Name three types of filters used during stages of fuel filtration on a typical diesel fuel system.

a. First stage-- _____

_____

b. Second stage-- _____

c. Third stage-- _____

8. Complete the following list of statements concerning fuel filters and separators.

a. Fuel filter components

1) Cast aluminum head, has all fuel connections

2) Aluminum filter base, has _____

3) Treated paper element

b. Water separator and primary filter

1) Has no resistance to fuel flow

2) Separates water from fuel by _____

3) Has no moving parts

4) Is effective in freezing or _____ conditions

5) Can be drained of sediments

6) Mounted on suction side of the pump

c. Agglomerator filter

1) Uses single bolt _____

2) Water drains without dismantling

3) Fuel flows in the inlet and through the paper filter where it separates the impurities

d. Spin-on filter

1) Gasket is part of the filter

2) _____ for more serviceability

3) Has no resistance to fuel flow

4) Fuel flows in the inlet and through the paper filter where it separates the impurities

9. Distinguish between the operation of series and parallel dual filters by placing an "X" next to the description of series filters.

_____a. All fuel flows through one filter before flowing through the other

_____b. Part of the fuel goes through each filter

FUEL SYSTEM COMPONENTS
UNIT II

ANSWERS TO TEST

1. a. 6
   b. 3
   c. 7
   d. 1
   e. 2
   f. 5
   g. 4

2. a. Fuel tank
   b. Fuel transfer pump
   c. Fuel filter
   d. Fuel injection pump
   e. Unit injector
   f. Fuel injection nozzle

3. a. 4
   b. 3
   c. 1
   d. 2
   e. 6
   f. 5

4. a. Leaks
   b. Condensation
   c. Dirt

5. a. 2
   b. 3
   c. 1

6. a

7. a. Filter screen at tank or transfer pump
   b. Primary filter
   c. Secondary filter

8. a. 2) Sediment trap
   b. 2) Specific gravity
      4) Waxing
   c. 1) For filter change
   d. 2) Easy to change

9. a

DISTRIBUTOR TYPE INJECTION PUMP
UNIT III

UNIT OBJECTIVE

After completion of this unit, the student should be able to identify the main parts of a distributor type pump and arrange in order the steps in which fuel flows during a complete pump cycle on a distributor type pump. The student should also be able to remove, bench test, and install a distributor type pump. This knowledge will be evidenced by correctly performing the procedures outlined in the job sheets and by scoring 85 percent on the unit test.

SPECIFIC OBJECTIVES

After completion of this unit, the student should be able to:

1. Match terms related to a distributor type injection pump with their correct definitions.
2. Identify the main parts of a distributor type pump.
3. Name three rotating parts of a distributor type pump.
4. Match the main parts of a distributor type pump with their functions.
5. Select true statements concerning the principles of operation of a distributor type pump.
6. Arrange in order the steps in which fuel flows during a complete pump cycle on a distributor type pump.
7. Select true statements concerning charging cycle operation.
8. Complete a list of statements concerning discharge cycle operation.
9. Select true statements concerning delivery valve operation.
10. Select true statements concerning return fuel oil circuit functions.
11. Name three functions of an end plate.
12. Complete a list of optional features of a distributor type pump.
13. Demonstrate the ability to:
    a. Remove a distributor type pump from an engine.
    b. Bench test a distributor type pump.
    c. Install a distributor type pump on an engine.

DISTRIBUTOR TYPE INJECTION PUMP
UNIT III

SUGGESTED ACTIVITIES

I. Provide student with objective sheet.

II. Provide student with information and job sheets.

III. Make transparencies.

IV. Discuss unit and specific objectives.

V. Discuss information sheet.

VI. Demonstrate and discuss the procedures outlined in the job sheets.

VII. Inform students this unit is written on a Roosa Master DP injection pump.

VIII. Color code fuel oil passages on transparency masters.

IX. Discuss disassembly of an injection pump.

X. Have students look up calibration data for an injection pump to use when bench testing.

XI. Take a field trip to an injection lab.

XII. Give test.

INSTRUCTIONAL MATERIALS

I. Included in this unit:

A. Objective sheet

B. Information sheet

C. Transparency masters

1. TM 1--Main Parts of Distributor Type Pump
2. TM 2--Fuel Flow
3. TM 3--Delivery Valve Operation
4. TM 4--End Plate Assembly with Transfer Pump
5. TM 5--Optional Features of a Distributor Type Pump
6. TM 6--Optional Features of a Distributor Type Pump (Continued)

D. Job sheets

1. Job Sheet #1--Remove a Distributor Type Pump from an Engine

2. Job Sheet #2--Bench Test a Distributor Type Pump

3. Job Sheet #3--Install a Distributor Type Pump on an Engine

E. Test

F. Answers to test

II. References:

A. Toboldt, William K. *Diesel Fundamentals, Service, Repair*. South Holland, IL: Goodheart-Willcox Company, Inc., 1980.

B. Kates, Edgar J., and Luck, William E. *Diesel and High Compression Gas Engines*. Third Edition. Chicago: American Technical Society, 1974.

C. *Fundamentals of Service: Engines*. Fifth Edition. Moline, IL: Deere and Company, 1980.

D. *Roosa Master: Operation and Instructional Manual: Model DP Pump*. Hartford, CT: Stanadyne/Hartford Division/Roosa Master.

E. Dagel, John F. *Diesel Engine Repair*. New York: John Wiley and Sons, Inc., 1982.

F. Foutes, William A. *Diesel Engine Mechanics*. Stillwater, OK: Mid-America Vocational Curriculum Consortium, 1977.

DISTRIBUTOR TYPE INJECTION PUMP
UNIT III

INFORMATION SHEET

I. Terms and definitions

A. Distributor type injection system–Normally uses one pump to distribute fuel to all cylinders

B. Annulus--Ring; a part, structure, or marking resembling a ring

C. Hydraulic--Operated or moved by liquid in motion

D. Registry--Oil passage that indexes with a port in a rotating head

E. Metering--Precision measurement of fuel delivery

F. Retraction–Act of drawing back

G. Servomechanism--Automatic device for controlling large amounts of power with small amounts of power as a piston moved by fluid under pressure

H. Circuit--Complete path of fuel flow

I. Delivery valve--Provides retraction of delivery line pressure causing nozzle valve to return to its seat, preventing dribble of fuel into combustion chamber

II. Main parts of distributor type pump (Transparency 1)

A. Drive shaft

B. Distributor rotor

C. Transfer pump

D. Pumping plungers

E. Internal cam-ring

F. Annulus in hydraulic head

G. End plate

H. Governor

I. Automatic advance

J. Housing

INFORMATION SHEET

III. Rotating parts of distributor type pump (Transparency 1)

A. Drive shaft

B. Distributor rotor

C. Transfer pump blades

IV. Functions of main parts (Transparency 1)

A. Drive shaft--Turns distributor rotor in the hydraulic head

B. Distributor rotor--Rotation of rotor causes pumping action of plungers which discharge fuel when passages index with appropriate passages in the hydraulic head

C. Transfer pump--Draws fuel from supply tank through inlet strainer to pump

(NOTE: Vane type pump is attached to opposite end of distributor rotor.)

D. Pumping plungers--Provide pressure to transfer fuel from rotor to hydraulic head to injection nozzles

E. Internal cam-ring--Actuates the pumping plungers

F. Hydraulic head--Contains the metering valve and the bore in which the rotor revolves

G. End plate--Houses the transfer pump pressure regulating valve and fuel strainer

H. Governor--Regulates the speed by positive mechanical linkage to metering valve

I. Automatic speed advance--Hydraulic servomechanism powered by oil pressure from the transfer pump which advances injection timing

(NOTE: Not all pumps are equipped with an automatic speed advance.)

J. Housing--Contains all component parts

V. Principles of operation of distributor type pump (Transparency 1)

A. Drive shaft engages the distributor rotor in the hydraulic head

(NOTE: Drive end of rotor has two cylinder bores, each containing two plungers.)

B. Plungers are actuated toward each other simultaneously by the internal cam-ring to pump fuel

C. As rotor revolves inside hydraulic head, the discharge passage in the rotor indexes with appropriate passage in the hydraulic head to lead to the injector nozzles

INFORMATION SHEET

VI. Fuel flow (Transparency 2)

A. Fuel is drawn from the supply tank into the pump through the inlet strainer by the vane type fuel transfer pump

B. Transfer pump pressure forces fuel through drilled passages in the hydraulic head into the annulus

C. Transfer pump pressure increases with speed

D. Fuel flows around the annulus to top of sleeve and through connecting passages to metering valve

E. Metering valve regulates the flow of fuel into the charging ring which incorporates the charging ports

F. As the rotor revolves, the twin inlet passages register with two charging ports in the hydraulic head allowing fuel to flow into the pumping cylinders

G. With further rotation, the inlet passages move out of registry and the single discharge port is opened

H. The rollers contact the cam lobes forcing the plungers together

I. Fuel trapped between the plungers is then delivered through delivery valve to the nozzle

VII. Charging cycle operation (Transparency 2)

A. When the rotor revolves, the angled inlet passages in the rotor line up with the charging ports of the charging ring

B. Pressurized fuel from the transfer pump, controlled by the opening of the metering valve, flows to the pumping cylinders forcing all plungers apart

C. The plungers move outward enough to supply the correct quantity of fuel for the engine load

(NOTE: At idle the plungers would move very little, whereas at maximum load they would go into full fuel position.)

VIII. Discharge cycle operation (Transparency 2)

A. As the rotor continues to revolve, the angled inlet passages no longer line up with the charging ports

B. Fuel is momentarily trapped until the rotor discharge passage lines up with one of the head outlets

C. The rollers contact the cam lobes and are forced together

INFORMATION SHEET

D. Fuel is then forced through the axial passage of the rotor, then to the injection line

E. Delivery of the fuel will continue until the rotors pass the high point on the cam

F. The fuel pressure in the axial passage is then reduced to a point where the injection nozzle closes

IX. Delivery valve operation (Transparency 3)

A. Controlled line retraction is the most important job of the delivery valve; this is accomplished by reducing injection line pressure to a point lower than that of the nozzle closing pressure

B. The delivery valve is located in a drilled passageway in the center of the rotor

C. There is only one delivery valve, so all cut-off points will be the same

D. As injection begins, fuel pressure moves the delivery valve off its shoulder to allow the volume of its displacement to enter the cavity that houses the delivery valve spring

E. This displaces a similar volume of fuel in the spring cavity before delivery starts through the valve ports

F. At the end of injection, the pressure on the plunger side of the delivery valve is reduced, allowing the cam rollers to fall into the retraction step of the cam lobes

G. As the valve moves back, the fuel is removed from the spring cavity and flows through the rotor discharge port; then, as the rotor revolves, it is trapped

X. Return fuel oil circuit functions

A. Transfer pump pressure is discharged into a cavity in the hydraulic head

B. The upper part of this cavity has a vent passage connected to it

C. Should air enter the transfer pump, it will be bled off and returned to the fuel tank

XI. Functions of end plate (Transparency 4)

A. Provides fuel inlet passages and houses pressure regulating valve

B. Covers the fuel transfer pump

C. Absorbs end thrust of drive and governor

INFORMATION SHEET

XII. Optional features of distributor type pump (Transparencies 5 and 6)

A. Viscosity compensator

B. Centrifugal governor

C. Automatic load advance

D. Automatic speed advance

E. Torque control

F. Electric shut-off

Main Parts of Distributor Type Pump

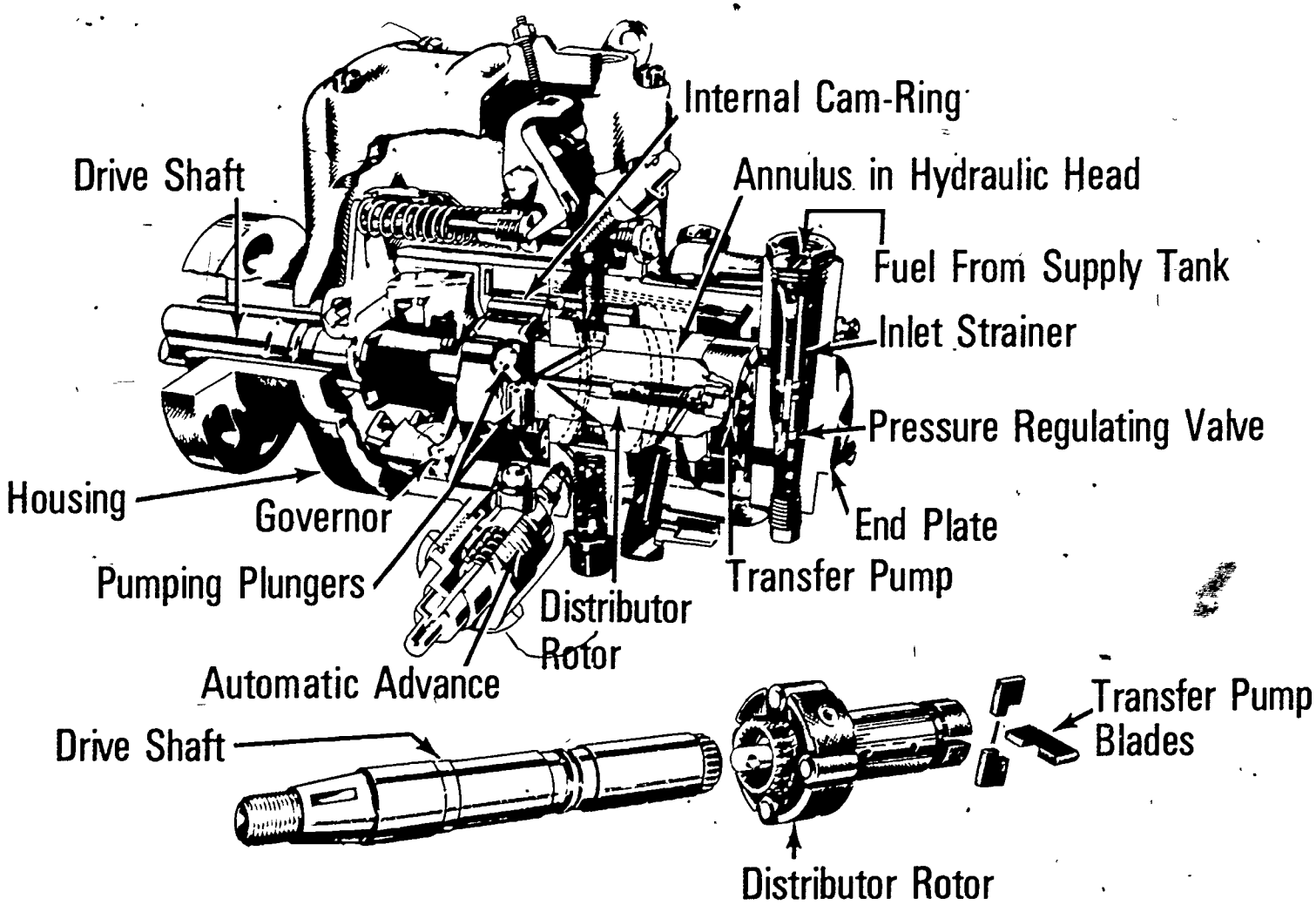

Fuel Flow

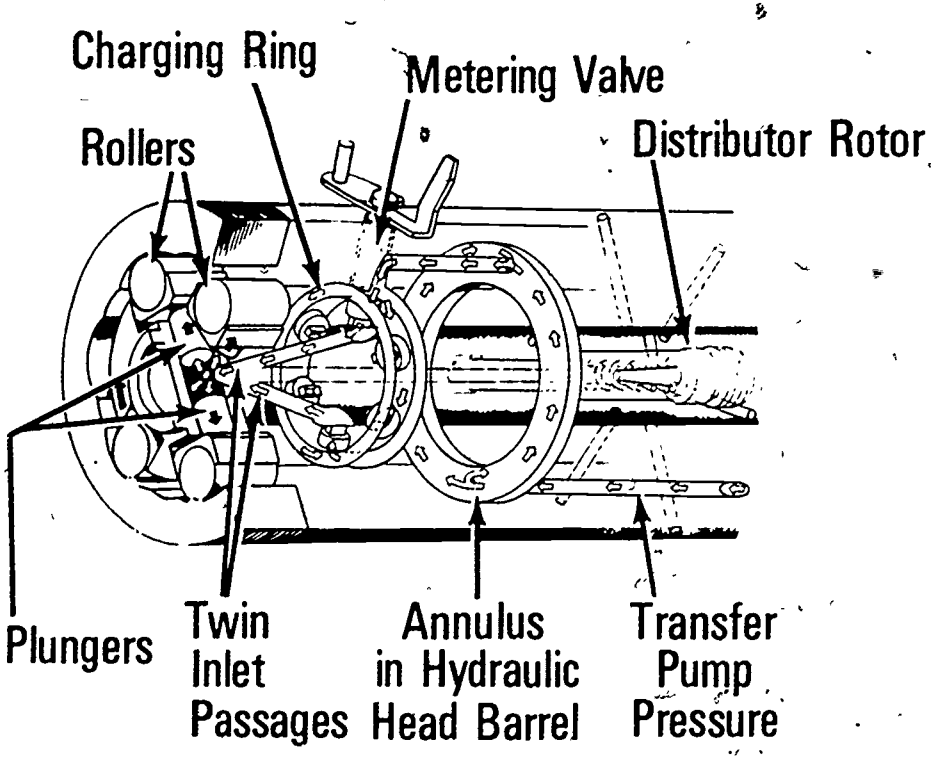

Charging Cycle

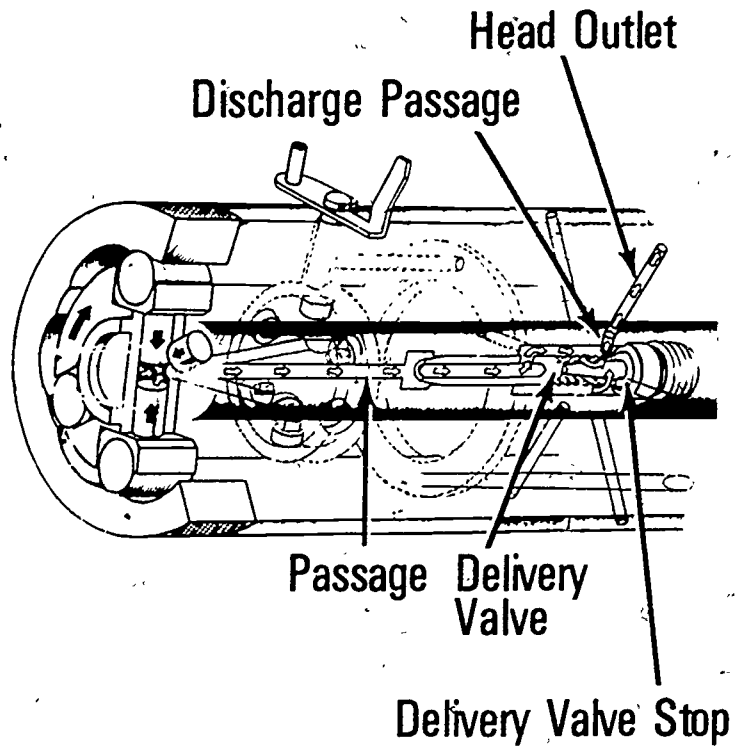

Discharge Cycle

Delivery Valve Operation

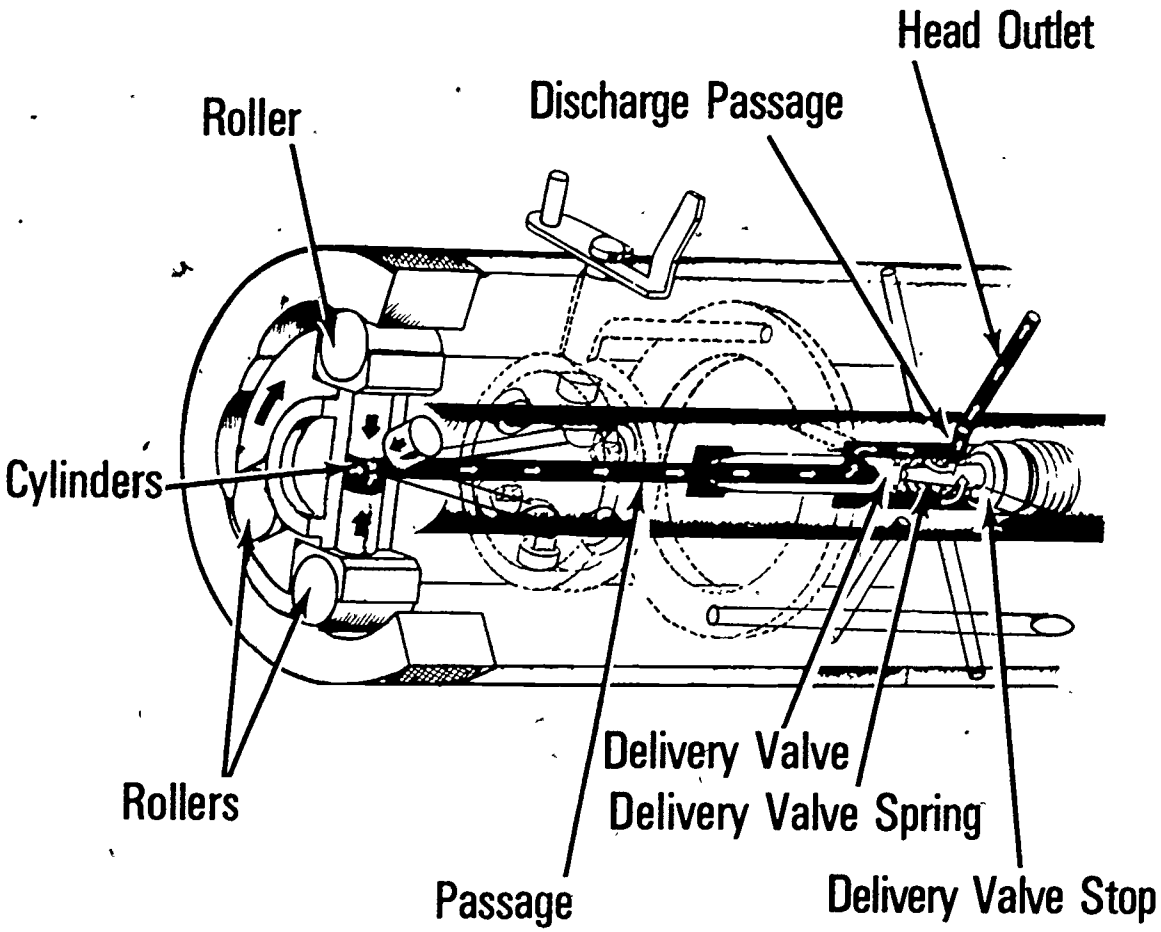

End Plate Assembly with Transfer Pump

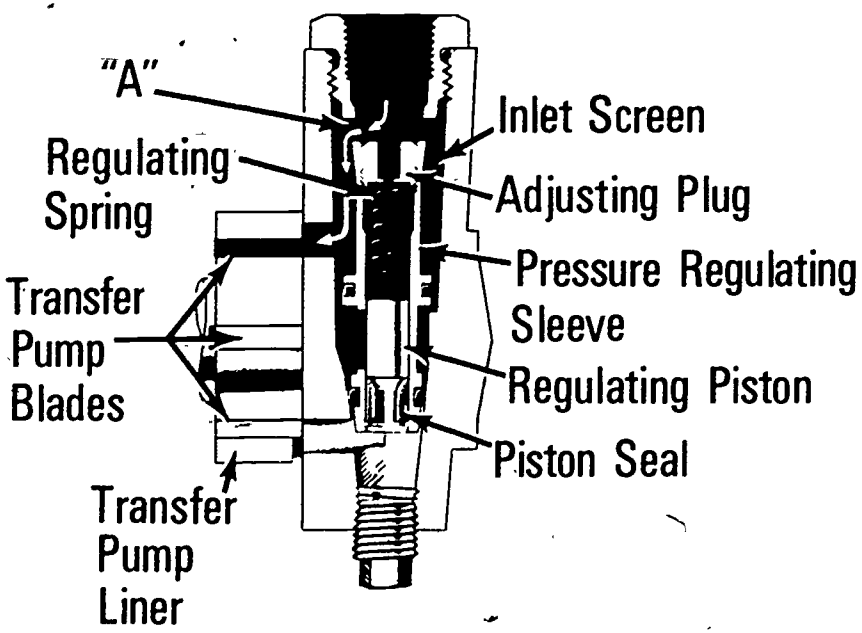

End Plate

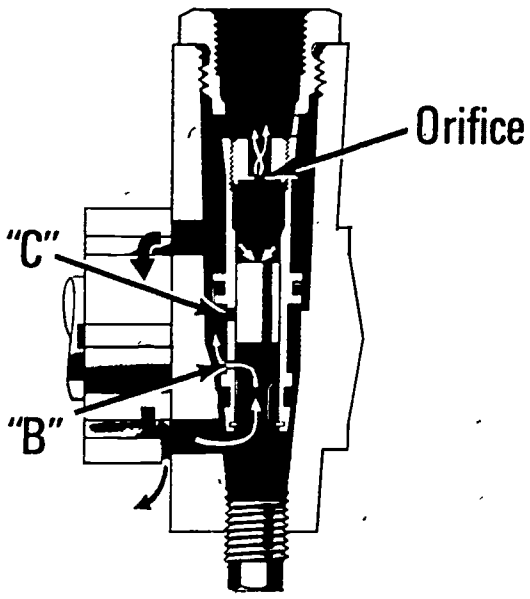

Pressure Regulating Valve

Optional Features of a Distributor Type Pump

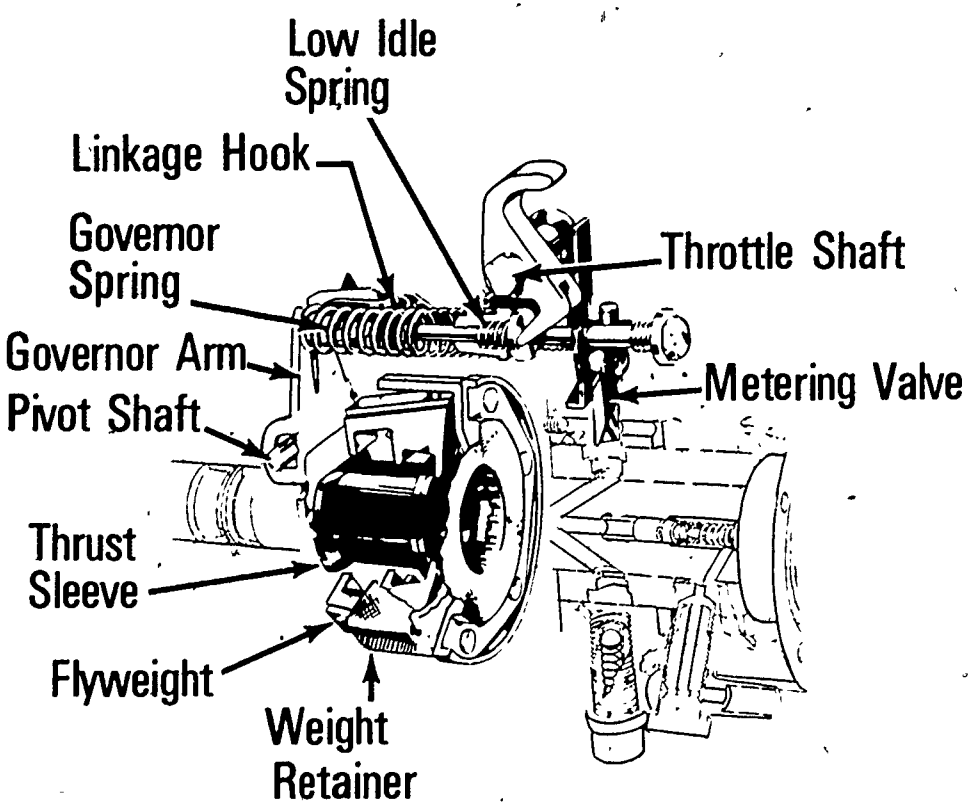

Centrifugal Governor

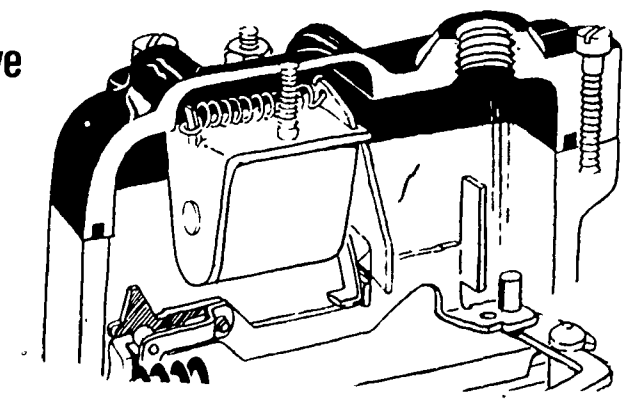

Electrical Shut-Off

Optional Features of a Distributor Type Pump

(Continued)

Automatic Advance Mechanism

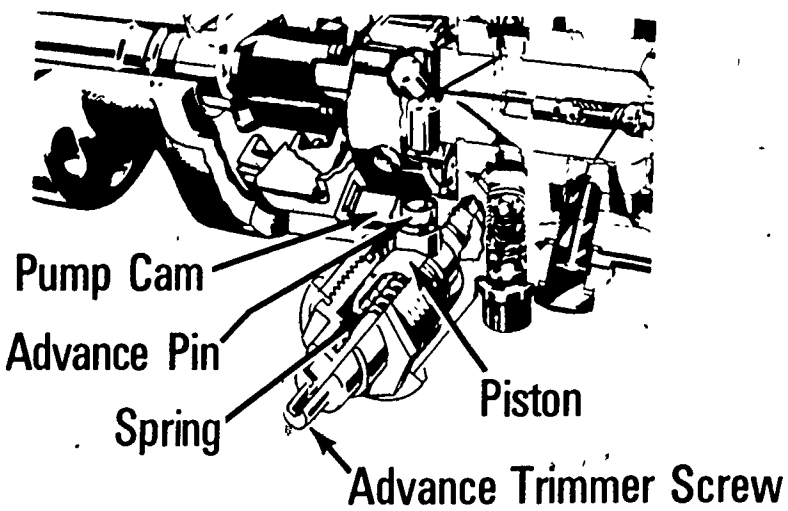

Torque Control Screw

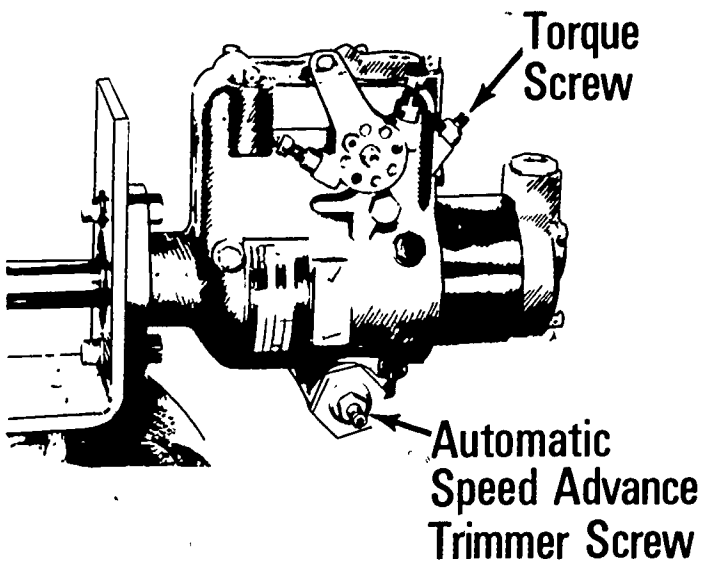

DISTRIBUTOR TYPE INJECTION PUMP
UNIT III

JOB SHEET #1--REMOVE A DISTRIBUTOR TYPE PUMP FROM AN ENGINE

I. Tools and materials

A. Distributor type pump

B. Appropriate service manual

C. Hand tool set

D. Solution for washing pump

E. Shop towels (lint-free)

F. Shipping caps or plugs for disconnected lines

G. Safety glasses

II. Procedure

(CAUTION: Follow all shop safety procedures.)

(NOTE: Refer to engine manual and determine type pump installation. If drive shaft is part of engine drive assembly, it remains with the engine.)

A. Clean and wash down pump, fittings, and all connections to be broken to eliminate any chance of dirt entering the system when lines are disconnected

(CAUTION: All openings should be temporarily plugged as lines are disconnected.)

B. Check the engine manual for proper timing position of crankshaft

C. Bar the engine in correct direction of rotation until the engine timing mark is indexed and the no. 1 cylinder is on compression stroke

D. Remove the timing window cover from the outboard side of the pump

(NOTE: The timing line on the governor weight retainer hub should be directly opposite the line on the cam. Engine performance will be poor if these lines are not indexed properly.)

(NOTE: To record static timing, remove no. 1 injector line from no. 1 injector and rotate engine slowly in direction of rotation; when a drop of fuel comes out of line, check timing mark and see if it is within specification.)

E. Disconnect the fuel supply, return, and nozzle leak-off lines and all high pressure lines, plugging all openings

JOB SHEET #1

F. Disconnect throttle and shut-off linkage

G. Tie throttle lever in full fuel position

H. Remove mounting nuts on the pump flange

I. Slide pump gently from location

(CAUTION: Be careful not to damage the pilot tube by cocking pump on removal.)

DISTRIBUTOR TYPE INJECTION PUMP
UNIT III

JOB SHEET #2--BENCH TEST A DISTRIBUTOR TYPE PUMP

I. Tools and materials

A. Distributor type pump

B. Appropriate service manual

C. Hand tool set

D. Injection line - 1/16" I.D. x 20" length

E. Injection line - 3/32" I.D. x 20" length

F. Calibrating nozzles adjusted to pump manufacturer's specifications

G. Pump test stand

H. Adapters--pump to test stand

I. Recommended calibrating oil

J. Shop towels (lint-free)

K. Safety glasses

JOB SHEET #2

II. Procedure

(CAUTION: Follow all shop safety procedures)

A. Calibrate and test

1. Mount the pump securely with appropriate adapters

(NOTE: If pump employs a steel pilot tube, do not support the drive shaft in the housing. A drive adapter, usually with a ball bearing, supports the shaft. These pumps must be tested using an intermediate support bearing. See Figure 1.)

FIGURE 1

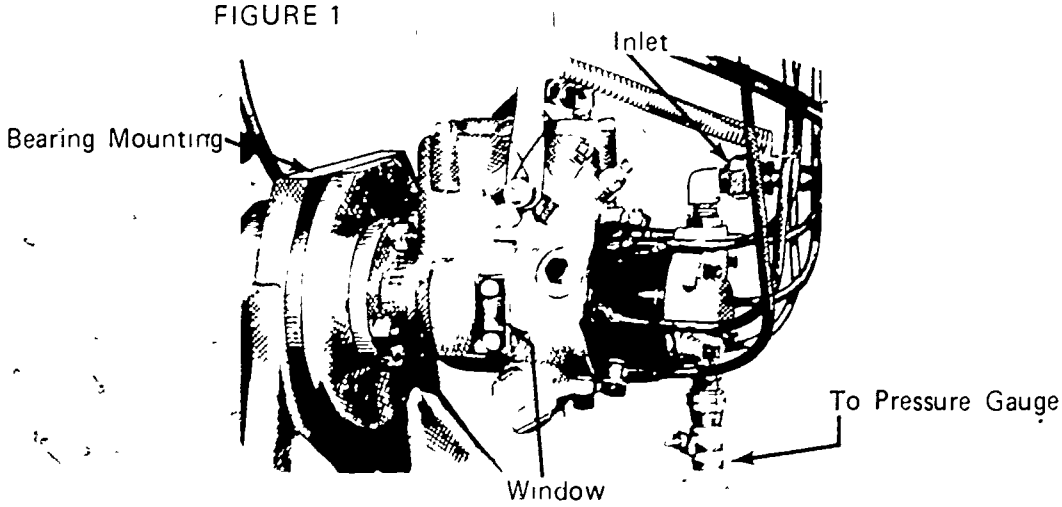

2. Install high pressure injection lines using new gaskets

(NOTE Install two new gaskets, one on each side of fitting. Leave fuel line connector screws at pump and injection line nuts at nozzles loose.)

3. Install inlet and return lines and transfer pump pressure gauge

(NOTE: Use a restriction fitting on the return line if the pump normally uses one.)

4. Determine proper direction of rotation from pump name plate ("C"-Clockwise, "CC" -Counter clockwise)

(NOTE: Rotation is determined as viewed from drive end of pump.)

5. Start stand at lowest speed, and move throttle to "full-load" position

6. Allow fuel to bleed for several seconds from loosened connector screws when transfer pump picks up suction

JOB SHEET #2

7. Allow fuel to bleed from loosened injection line nuts; then, tighten securely

(NOTE: If pump is factory tested on stands which measure fuel flow in cubic millimeters, it is necessary to convert the readings on other types of stands which measure in cubic centimeters. See Figure 2.)

FIGURE 2

Delivery In Each Graduate (CC's)	Delivery in Cubic Millimeters (MM^3) per Stroke								
	Numbered Strokes								
	25	100	125	200	250	300	400	500	1000
	40	10	8	5	4	3.3	2.5	2	1 (mm^3)
2	80	20	16	10	8	6.7	5.0	4	2
3	120	30	24	5	12	10.0	7.5	6	3
4	160	40	32	20	16	13.3	10.0	8	4
5	200	50	40	25	20	16.7	12.5	10	5
6	240	60	48	30	24	20.0	15.0	12	6
7	280	70	56	35	28	23.3	17.5	14	7
8	320	80	64	40	32	26.7	20.0	16	8
9	360	90	72	45	36	30.0	22.5	18	9
10	400	100	80	50	40	33.3	25.0	20	10
20		200	160	100	80	66.7	50.0	40	20
30		300	240	150	120	100.0	75.0	60	30
40		400	320	200	160	133.3	100.0	80	40
50			400	250	200	166.7	125.0	100	50
60				300	240	200.0	150.0	120	60
70				350	280	233.3	175.0	140	70
80				400	320	266.7	200.0	160	80
90					360	300.0	225.0	180	90
100					400	333.3	250.0	200	100

(NOTE: The test stand tachometer registers pump speed. Some specification test data refers to engine speed.)

8. Operate pump at 1000 rpm for 10 minutes

9. Dry off completely with compressed air

10. Observe for leaks and correct as necessary

11. Back out the high idle stop screw and torque screw (if equipped)

(NOTE: The inlet to the transfer pump should never be pressurized during bench testing.)

JOB SHEET #2

12. Close valve in supply line

    (NOTE: Check to see that transfer pump pulls up to manufacturer's specifications. If it does not, check for air leaks on suction side or malfunction of end plate and transfer pump parts. If the pump is equipped with an external by-pass, it should be pinched off during this test.)

13. Fill graduates to bleed air from test stand and to wet glass

14. Observe return oil

    (NOTE: Compare observable return with manufacturer's specifications. By-pass equipped pumps will return less fuel.)

15. Operate the specified speeds with wide open throttle and observe transfer pump pressure

    (NOTE: Adjust pressure regulating spring plug to raise or lower transfer pump pressure.)

    (CAUTION: Under no circumstances should 130 psi be exceeded. See Figure 3.)

FIGURE 3

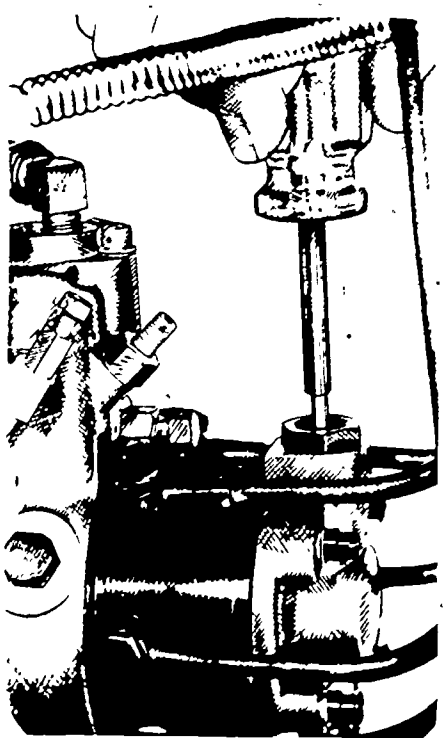

TRANSFER PUMP PRESSURE ADJUSTMENT

16. Check for minimum delivery at cranking speed

JOB SHEET #2

17. Operate at high idle speed and adjust high idle screw to obtain the specified delivery (Figure 4)

FIGURE 4

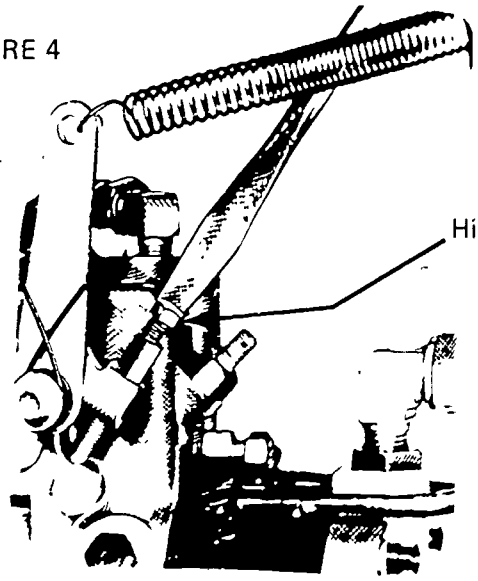

18. Adjust the low idle screw to the correct low idle delivery (Figure 5)

FIGURE 5

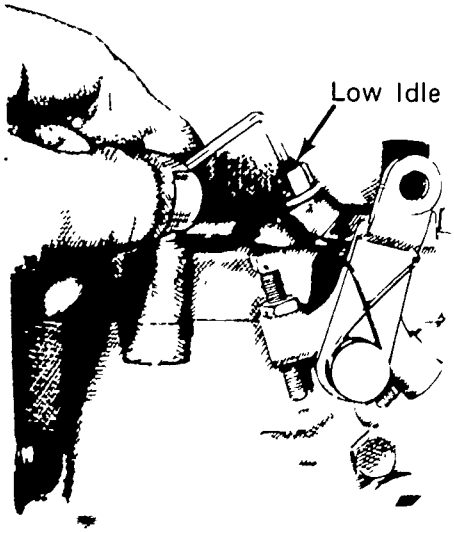

JOB SHEET #2

19. Adjust automatic advance

a. Adjust speed advance

1) Check the cam position at specified points in the speed range

2) Adjust trimmer screw, or shim, as required to obtain proper advance operation (Figure 6)

FIGURE 6

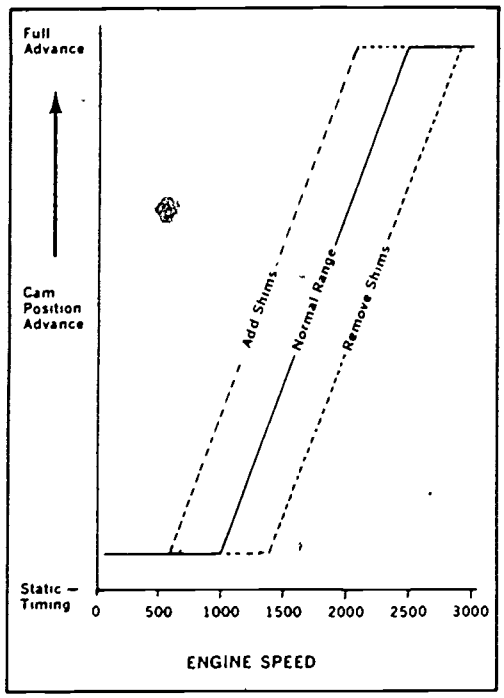

b. Adjust load advance

1) Adjust the test stand speed to the specified part-load delivery

JOB SHEET #2

2) Observe cam position and adjust guide stud for correct cam movement (Figures 7 and 8)

FIGURE 7

Load Advance Adjustment

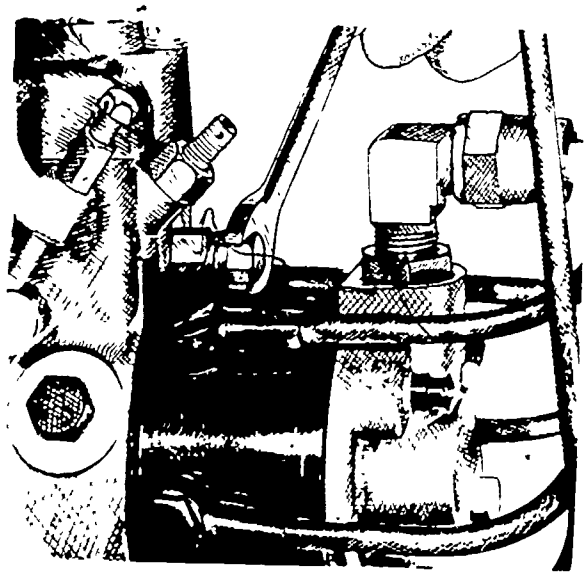

FIGURE 8

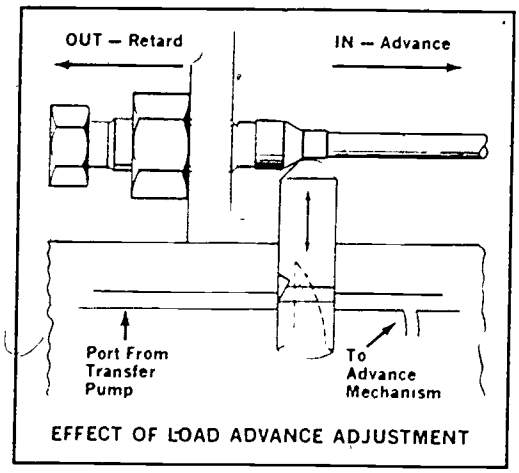

EFFECT OF LOAD ADVANCE ADJUSTMENT

20. Record fuel delivery at check points shown on the pump specification

(NOTE: ROLLER SETTINGS SHOULD NOT BE READJUSTED ON THE TEST BENCH. Experience has proven that micrometer and dial indicator settings provide more consistent, accurate results in performance. Variations in test benches, nozzles, lines, and fuels in different areas sometime result in inaccurate flow readings.)

JOB SHEET #2

21. Set torque screw (if employed) to specified delivery while operating at full-load governed speed (Figure 9)

FIGURE 9

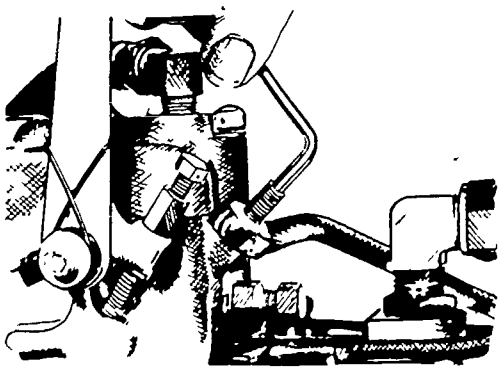

TORQUE SCREW ADJUSTMENT

22. Recheck delivery at lowest speed checkpoint

23. Check governor cutoff at specified speed

B. Remove from test stand and assemble all sealing wires; pump is now ready for installation to engine

(NOTE: If there is no drive shaft with the pump, wire the throttle level in "full fuel" position for shipment or until installed on engine. Otherwise, mount the pump on drive adapter with shaft. Check shaft seals with a pressure test on the housing.)

DISTRIBUTOR TYPE INJECTION PUMP
UNIT III

JOB SHEET #3--INSTALL A DISTRIBUTOR TYPE PUMP ON AN ENGINE

I. Tools and materials

A. Distributor type pump

B. Appropriate service manual

C. Drive shaft installation tool

D. Torque wrench

E. Safety glasses

II. Procedure

(CAUTION: Follow all shop safety procedures.)

(NOTE: Pumps marked "Timed Start Inj." or "Timed End Inj." on the timing window cover are timed according to procedures below.)

A. Remove outboard timing window cover (name plate side)

B. Rotate the distributor rotor with a CLEAN, wide bladed screwdriver or the pump drive shaft inserted into the drive end of the pump until the timing line on the weight retainer hug registers with the line on the cam O.D.

(NOTE: The pump is now correctly positioned for assembly to the engine.)

C. Roll the engine in direction of rotation until the flywheel is correctly positioned for fuel pump assembly (See engine manual)

D. Apply a light coat of grease to the drive shaft seals

E. Compress the drive shaft seals with the drive shaft installation tool and slide the pump into position over the mounting studs

(NOTE; Make sure drive shaft and seals are properly positioned.)

F. Assemble and tighten the mounting nuts finger tight

JOB SHEET #3

G. Rotate pump, first in the direction of rotation and then in the opposite direction until timing lines again register (Figures 1 and 2)

FIGURE 1

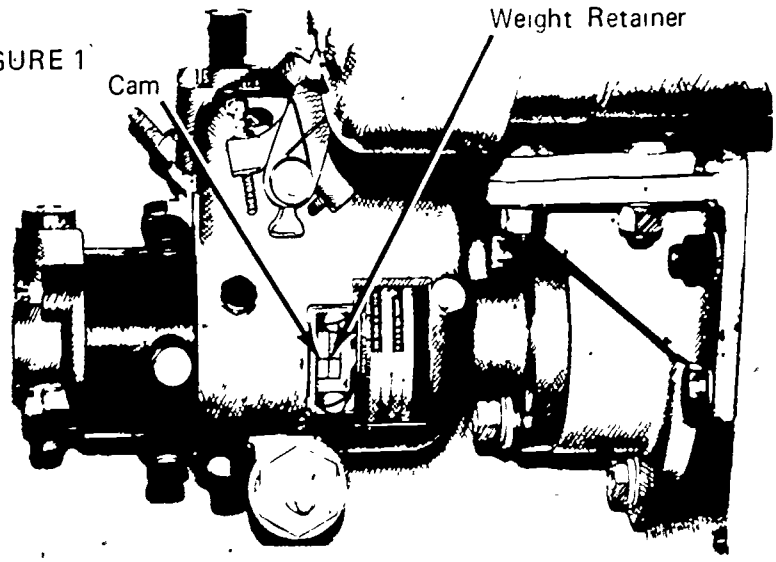

FIGURE 2

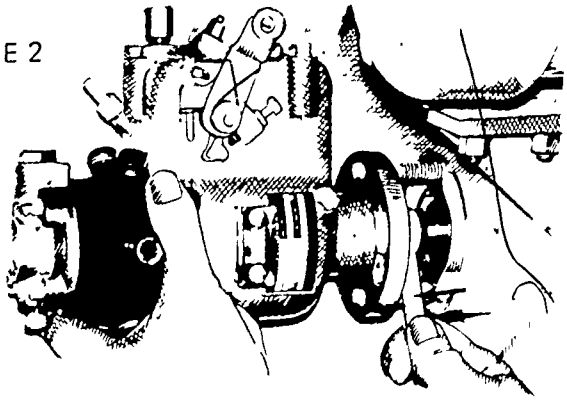

H. Tighten nuts securely to take up all back lash

(CAUTION: Drive shaft spline should engage with hand pressure. Do not attempt to "draw up" the pump flange with mounting stud nuts. If spline does not engage, rotate pump slightly to locate timing pin.)

I. Back off engine at least 1/2 revolution and roll it again in the direction of rotation to the proper timing mark

(NOTE: Recheck line marks in the pump and correct if necessary Repeat procedure to insure proper timing)

JOB SHEET #3

J. Unplug open ends of high pressure lines, assemble with new fuel line connector washers, and tighten to specified torque

K. Assemble and tighten fuel return and nozzle leak-off lines

L. Attach pump controls

M. Open bleed screw on secondary filter, and operate hand primer (if equipped) or allow fuel to flow from tank until all air is dispelled from filter

N. Close bleed screw

O. Continue hand priming until a quantity of fuel flows "air-free" at pump inlet line

P. Fasten the inlet line to the pump

(NOTE: This procedure should also be followed without fail after every filter change. Refer to engine manual for starting instructions before starting engine.)

Q. Provide means for emergency shut-off

DISTRIBUTOR TYPE INJECTION PUMP
UNIT III

NAME _____

TEST

1. Match the terms on the right with their correct definitions.

_____a. Ring; a part, structure, or marking resembling a ring

_____b. Operated or moved by liquid in motion

_____c. Oil passage that indexes with a port in a rotating head

_____d. Act of drawing back

_____e. Automatic device for controlling large amounts of power with small amounts of power as a piston moved by fluid under pressure

_____f. Complete path of fuel flow

_____g. Normally uses one pump to distribute fuel to all cylinders

_____h. Provides retraction of delivery line pressure causing nozzle valve to return to its seat, preventing dribble of fuel into combustion chamber

_____i. Precision measurement of fuel delivery

1. Hydraulic
2. Distributor type injection system
3. Retraction
4. Circuit
5. Servomechanism
6. Annulus
7. Registry
8. Metering
9. Delivery valve

2. Identify the main parts of a distributor type pump.

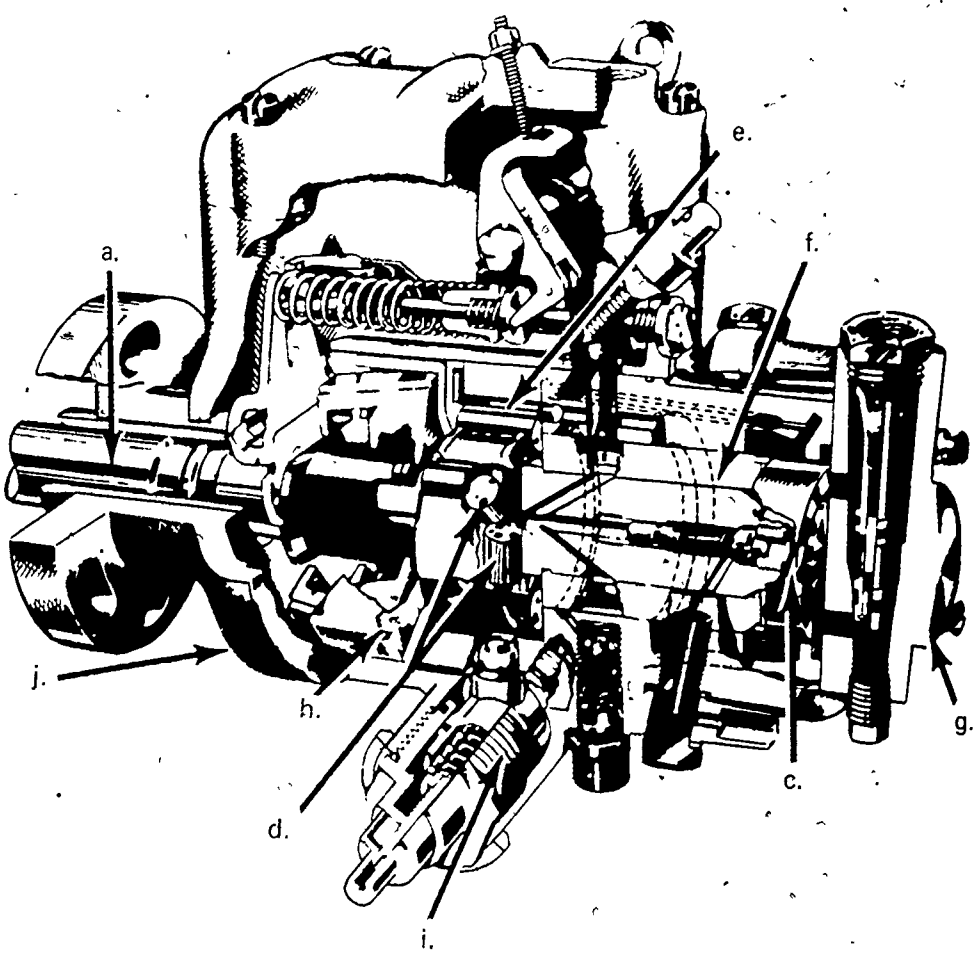

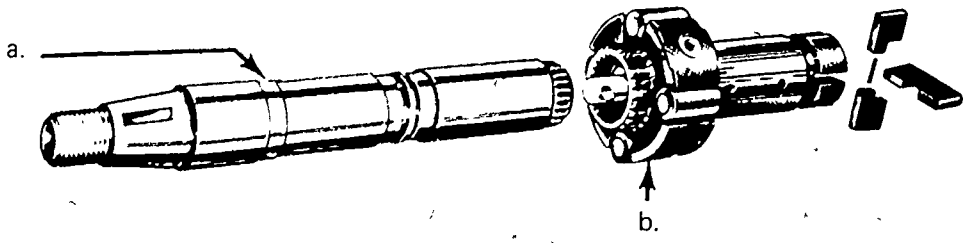

a. _____ f. _____

b. _____ g. _____

c. _____ h _____

d. _____ i _____

e. _____ j _____

3. Name three rotating parts of a distributor type pump.

a. _____

b. _____

c. _____

4. Match the main parts of a distributor type pump on the right with their functions.

_____a. Turns distributor rotor in the hydraulic head	1. Pumping plungers
_____b. Rotation of rotor causes pumping action of plungers which discharge fuel when passages index with appropriate passages in the hydraulic head	2. Drive shaft
_____c. Draws fuel from supply tank through inlet strainer to pump	3. Distributor rotor
_____d. Provide pressure to transfer fuel from rotor to hydraulic head to injection nozzles	4. Housing
_____e. Actuates the pumping plungers	5. Hydraulic head
_____f. Contains the metering valve and the bore in which the rotor revolves	6. Automatic speed advance
_____g. Houses the transfer pump pressure regulating valve and fuel strainer	7. Governor
_____h. Regulates the speed by positive mechanical linkage to metering valve	8. Internal cam-ring
_____i. Hydraulic servomechanism powered by oil pressure from the transfer pump which advances injection timing	9. Transfer pump
_____j. Contains all component parts	10. End plate

5. Select true statements concerning the principles of operation of a distributor type pump by placing an "X" in the appropriate blanks.

_____a. Drive shaft engages the distributor rotor in the hydraulic head

_____b. Plungers are actuated toward each other simultaneously by the internal cam-ring to pump fuel

_____c. As rotor revolves inside hydraulic head, the discharge passage in the rotor indexes with appropriate passage in the hydraulic head to lead to the injector nozzles

6. Arrange in order the steps in which fuel flows during a complete pump cycle on a distributor type pump.

_____a. Fuel flows around the annulus to top of sleeve and through connecting passages to metering valve

_____b. Fuel trapped between the plungers is then delivered through delivery valve to the nozzle

_____c. Transfer pump pressure increases with speed

_____d. Fuel is drawn from the supply tank into the pump through the inlet strainer by the vane type fuel transfer pump

_____e. Metering valve regulates the flow of fuel into the charging ring which incorporates the charging ports

_____f. Transfer pump pressure forces fuel through drilled passages in the hydraulic head into the annulus

_____g. As the rotor revolves, the twin inlet passages register with two charging ports in the hydraulic head allowing fuel to flow into the pumping cylinders

_____h. With further rotation, the inlet passages move out of registry and the single discharge port is opened

_____i. The rollers contact the cam lobes forcing the plungers together

7. Select true statements concerning charging cycle operation by placing an "X" in the appropriate blanks.

_____a. When the rotor revolves, the angled inlet passages in the rotor line up with the charging ports of the charging ring

_____b. Pressurized fuel from the transfer pump, controlled by the opening of the metering valve, flows to the pumping cylinders forcing all plungers together

_____c. The plungers move outward enough to supply the correct quantity of fuel for the engine load

8. Complete the following list of statements concerning discharge cycle operation.

a. As the rotor continues to revolve, the angled inlet passages no longer line up with the _____

b. Fuel is momentarily trapped until the rotor discharge passage lines up with one of the _____

c. The rollers contact the cam lobes and are forced together

d. Fuel is then forced through the axial passage of the rotor, then to the _____ _____

e. Delivery of the fuel will continue until the rotors pass the _____ on the cam

f. The fuel pressure in the axial passage is then reduced to a point where the injection nozzle closes

9. Select true statements concerning delivery valve operation by placing an "X" in the appropriate blanks.

_____a. Controlled line retraction is the most important job of the delivery valve; this is accomplished by reducing injection line pressure to a point lower than that of the nozzle closing pressure

_____b. The delivery valve is located in a drilled passageway in the center of the rotor

_____c. There is a delivery valve for every cylinder

_____d. As injection begins, fuel pressure moves the delivery valve off its shoulder to allow the volume of its displacement to enter the cavity that houses the delivery valve spring.

_____e. This displaces a similar volume of fuel in the spring cavity before delivery starts through the valve ports

_____f. At the end of injection, the pressure on the plunger side of the delivery valve is increased, allowing the cam rollers to fall into the retraction step of the cam lobes

_____g. As the valve moves back, the fuel is removed from the spring cavity and flows through the rotor intake port; then, as the rotor revolves, it is trapped

10. Select true statements concerning return fuel oil circuit functions by placing an "X" in the appropriate blanks.

_____a. Transfer pump pressure is discharged into a cavity in the hydraulic head

_____b. The lower part of this cavity has a vent passage connected to it

_____c. Should air enter the transfer pump, it will be bled off and returned to the fuel tank

11. Name three functions of an end plate.

a. _____

b. _____

c. _____

12. Complete a list of optional features of a distributor type pump.

    a. Viscosity compensator

    b. _____

    c. Automatic load advance

    d. _____

    e. _____

    f. Electric shut-off

13. Demonstrate the ability to:

    a. Remove a distributor type pump from an engine.

    b. Bench test a distributor type pump.

    c. Install a distributor type pump on an engine.

    (NOTE: If these activities have not been accomplished prior to the test, ask your instructor when they should be completed.)

DISTRIBUTOR TYPE INJECTION PUMP
UNIT III

ANSWERS TO TEST

1. a. 6 f. 4
   b. 1 g. 2
   c. 7 h. 9
   d. 3 i. 8
   e. 5

2. a. Drive shaft
   b. Distributor rotor
   c. Transfer pump
   d. Pumping plungers
   e. Internal cam-ring
   f. Annulus in hydraulic head
   g. End plate
   h. Governor
   i. Automatic advance
   j. Housing

3. a. Drive shaft
   b. Distributor rotor
   c. Transfer pump blades

4. a. 2 f. 5
   b. 3 g. 10
   c. 9 h. 7
   d. 1 i. 6
   e. 8 j. 4

5. a, b, c

6. a. 4 f. 2
   b. 9 g. 6
   c. 3 h. 7
   d. 1 i. 8
   e. 5

7. a, c

8. a. Charging ports
   b. Head outlets
   d. Injection line
   e. High point

9. a, b, d, e

10. a, c

11. a. Provides fuel inlet passages and houses pressure regulating valve
    b. Covers the fuel transfer pump
    c. Absorbs end thrust of drive and governor

12. b. Centrifugal governor
    d. Automatic speed advance
    e. Torque control

13. Performance skills evaluated to the satisfaction of the instructor

IN-LINE INJECTION PUMP
UNIT IV

UNIT OBJECTIVE

After completion of this unit, the student should be able to match the main parts of an in-line injection pump and identify typical tools used for overhauling an in-line injection pump. The student should also be able to remove, overhaul, and reassemble an in-line injection pump. This knowledge will be evidenced by correctly performing the procedures outlined in the job sheets and by scoring 85 percent on the unit test.

SPECIFIC OBJECTIVES

After completion of this unit, the student should be able to:

1. Match terms related to an in-line injection pump with their correct definitions.
2. Match the main parts of an in-line pump with their correct names.
3. Arrange in order the steps in which fuel flows from supply tank to delivery.
4. State the purpose of a hand primer.
5. Select true statements concerning the purpose of a fuel transfer pump.
6. Select true statements concerning the operation of an injection pump.
7. Identify parts and design features of a pumping element.
8. Complete a list of statements concerning the operation of the control rack and sleeve.
9. State the purpose of a delivery valve.
10. Identify the plunger and rack positions.
11. Identify typical tools used for overhauling an in-line injection pump.
12. Demonstrate the ability to:
    a. Remove an in-line pump.
    b. Overhaul an in-line pump.
    c. Clean and inspect in-line pump components.
    d. Reassemble an in-line pump.
    e. Reassemble the R.Q.V. governor.
    f. Bench test an in-line pump.

IN-LINE INJECTION PUMP
UNIT IV

SUGGESTED ACTIVITIES

I. Provide student with objective sheet.

II. Provide student with information and job sheets.

III. Make transparencies.

IV. Discuss unit and specific objectives.

V. Discuss information sheet.

VI. Demonstrate and discuss the procedures outlined in the job sheets.

VII. Provide appropriate service manual for pump used in your shop.

VIII. Show students how to use a service manual.

IX. Provide operation manual for test stand you will be using.

X. Advise students that International Harvester tools/numbers will be referenced in Job Sheets #2, #4, and #5.

XI. Give test.

INSTRUCTIONAL MATERIALS

I. Included in this unit:

A. Objective sheet

B. Information sheet

C. Transparency masters

1. TM 1--In-Line Injection Pump
2. TM 2--Main Pump Parts
3. TM 3--Fuel Flow
4. TM 4--Injection Pump Operation
5. TM 5--Parts and Design of Pumping Element
6. TM 6--Control Rack and Sleeve
7. TM 7--Plunger Positions at Fuel Delivery
8. TM 8--Special Rebuild Tools

D. Job Sheets

1. Job Sheet #1--Remove an In-line Pump
2. Job Sheet #2--Overhaul an In-line Pump
3. Job Sheet #3--Clean and Inspect In-line Pump Components
4. Job Sheet #4--Reassemble an In-line Pump
5. Job Sheet #5--Reassemble the R.Q.V. Governor
6. Job Sheet #6--Bench Test an In-line Pump

(NOTE: Illustrations which appear in Job Sheets 2, 4, and 5 of this unit are courtesy of International Harvester.)

E. Test

F. Answers to test

II. References:

A. Toboldt, William K. *Diesel Fundamentals; Service, Repair*. South Holland, IL: Goodheart-Willcox Company, Inc., 1980.

B. Kates, Edgar J., and Luck, William E. *Diesel and High Compression Gas Engines*. Third Edition. Chicago: American Technical Society, 1974.

C. *Fundamentals of Service: Engines*. Fifth Edition. Moline, IL: Deere and Company, 1980.

D. *Technical Manual: John Deere Fuel Injection Equipment - Robert Bosch*. Moline, IL: Deere and Company, April 1974.

E. *Fuel System: Fuel Injection Pump - Robert Bosch "A" Type for DV-462B and DV-550B Engines*. Chicago: International Harvester Co.

F. Dagel, John F. *Diesel Engine Repair*. New York: John Wiley and Sons, Inc., 1982.

G. Foutes, William A. *Diesel Engine Mechanics*. Stillwater, OK: Mid-America Vocational Curriculum Consortium, 1977.

IN-LINE INJECTION PUMP
UNIT IV

INFORMATION SHEET

I. Terms and definitions

A. In-line injection pump--Uses an individual pump for each cylinder with pumps mounted in-line (Transparency 1)

B. Annular groove--Machined recess forming a ring on pumping plunger

C. Vertical slot--Located at right angles to the plane of the supporting surface

D. Helix--Spiraled, machined recess on pumping plunger

E. Gallery--Long, narrow fuel or oil passage

F. Aneroid--Device which limits fuel supply to engine, preventing excess smoke

G. Transfer pump (supply pump)--Sends fuel at low pressure through filters to the injection pump

II. Main parts of in-line pump (Transparency 2)

A. Aneroid

B. Individual pumping element

C. Injection line

D. Leak-off line

E. Pump housing

F. Hand primer

G. Sediment bowl

H. Fuel transfer pump

I. Camshaft

J. Control rack

K. Governor

III. Fuel flow from supply tank to delivery (Transparency 3)

A. Fuel is drawn from supply tank through primary filter by fuel transfer pump

INFORMATION SHEET

B. Transfer pump forces fuel under low pressure through secondary filter and through final stage filter to each injection pumping element

C. Pumping element meters fuel at high pressure to each injection nozzle for delivery to combustion chamber

IV. Purpose of hand primer Hand primer on fuel transfer pump can be operated by hand to pump fuel when bleeding the system (Transparency 4)

V. Purpose of fuel transfer pump

A. Draws fuel from supply tank through primary filter

B. Assures fuel supply to injection pumping elements

(NOTE: All fuel flows through a preliminary filter in the transfer pump sediment bowl.)

VI. Injection pump operation (Transparency 4)

A. Plunger type pump has engine driven camshaft rotating at half engine speed

B. Roller cam followers, riding on cam lobes, operate the plungers to supply high pressure fuel through delivery valves to injection nozzles

VII. Parts and design features of pumping element (Transparency 5)

A. Spill ports

B. Plunger

C. Annular groove

D Barrel

E. Helix

F. Vertical slot

VIII Operation of control rack and sleeve (Transparency 6)

A. Governor moves rack to regulate speed of engine

B. The sleeve, rotated by the control rack, is fitted over the barrel and connects to the vanes on the plunger

C. Plunger rotation opens or closes the helix which meters the quantity of fuel for delivery to cylinder

INFORMATION SHEET

IX. Purpose of delivery valve--The delivery valve creates a sudden pressure drop in the delivery line causing the injector nozzle valve to close instantly (Transparency 6)

(NOTE: This effect prevents dribbling at the nozzle.)

X. Plunger and rack positions (Transparency 7)

A. No fuel delivery

B. Partial fuel delivery

C. Maximum fuel delivery

XI. Typical tools used for overhauling an in-line injection pump (Transparency 8)

(NOTE: The tool numbers listed below and on Transparency 8 refer to International Harvester tools only and will be used in upcoming job sheets.)

A. SE-2119--Rack gauge holder

B. SE-2121--Dial indicator (inch reading)

C. SE-2339--Wrench, holding, drive flange

D. SE-2340--Remover, governor flyweight damper

E. SE-2341--Holder, tappet

F. SE-2342--Gauge, camshaft protrusion

G. SE-2343--Holder, dial indicator

H. SE-2344--Remover and installer, camshaft cylindrical nut

I. SE-2345--Remover and installer, tappet

J. SE-2346--Remover and installer, barrel plunger

K. SE-2347--Wrench, tappet adjusting

L. SE-2348--Wrench, governor spring adjusting

M. SE-2349--Remover and installer, governor spring and adjusting screw

N. SE-2351--Fixture, pump holding

In-Line Injection Pump

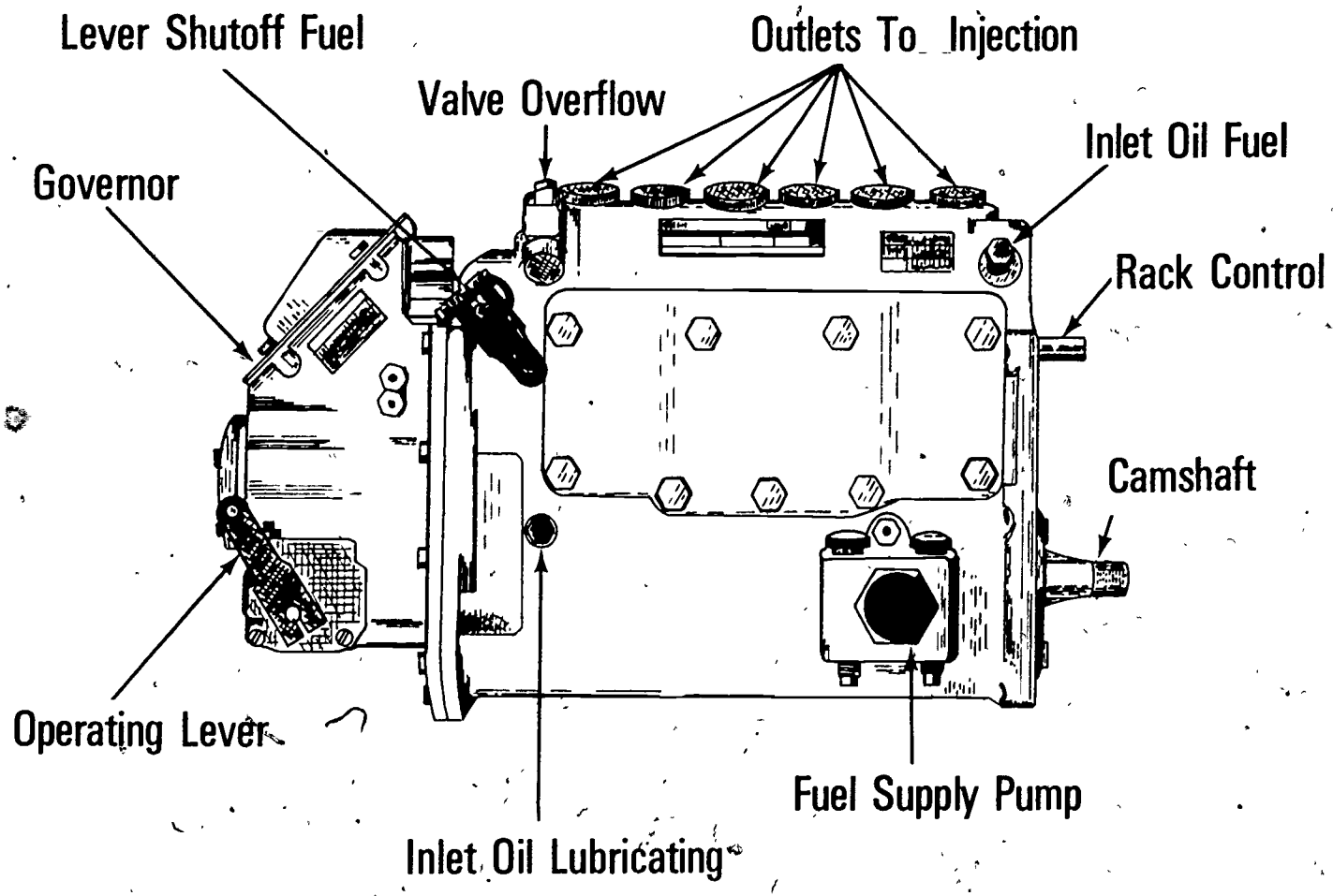

Main Pump Parts

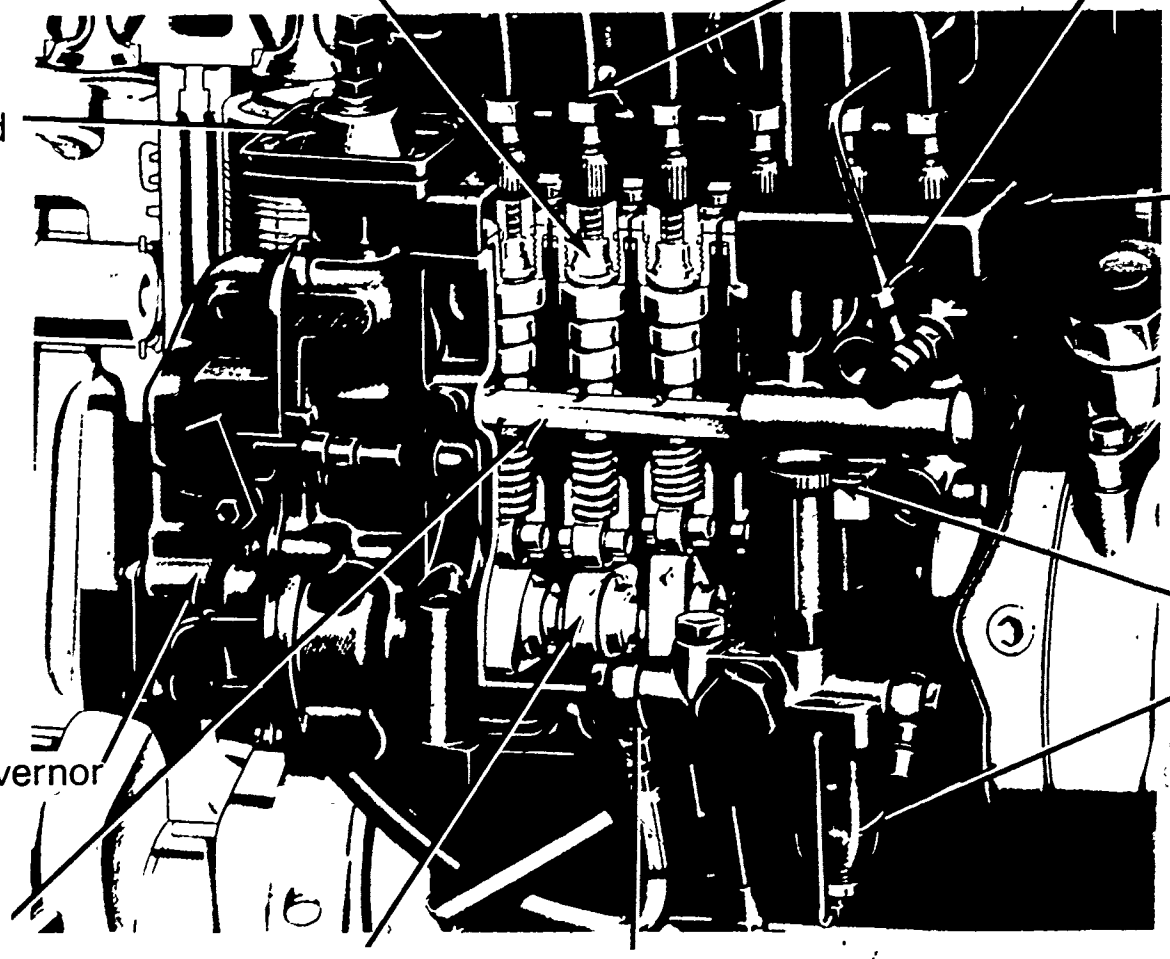

Fuel Flow

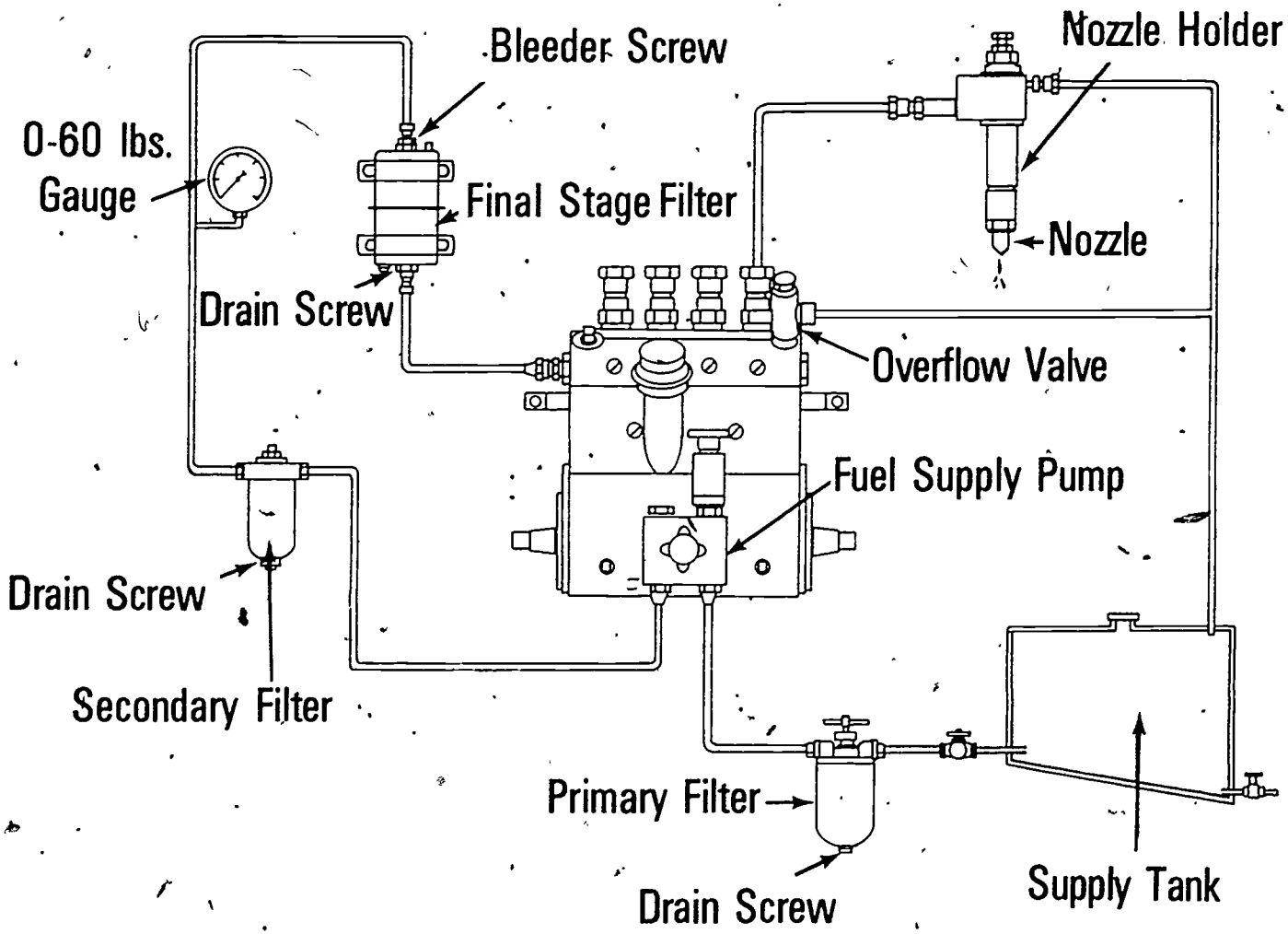
Bleeder Screw
Nozzle Holder
0-60 lbs.
Gauge
Final Stage Filter
Nozzle
Drain Screw
Overflow Valve
Fuel Supply Pump
Drain Screw
Secondary Filter
Primary Filter
Drain Screw
Supply Tank

Injection Pump Operation

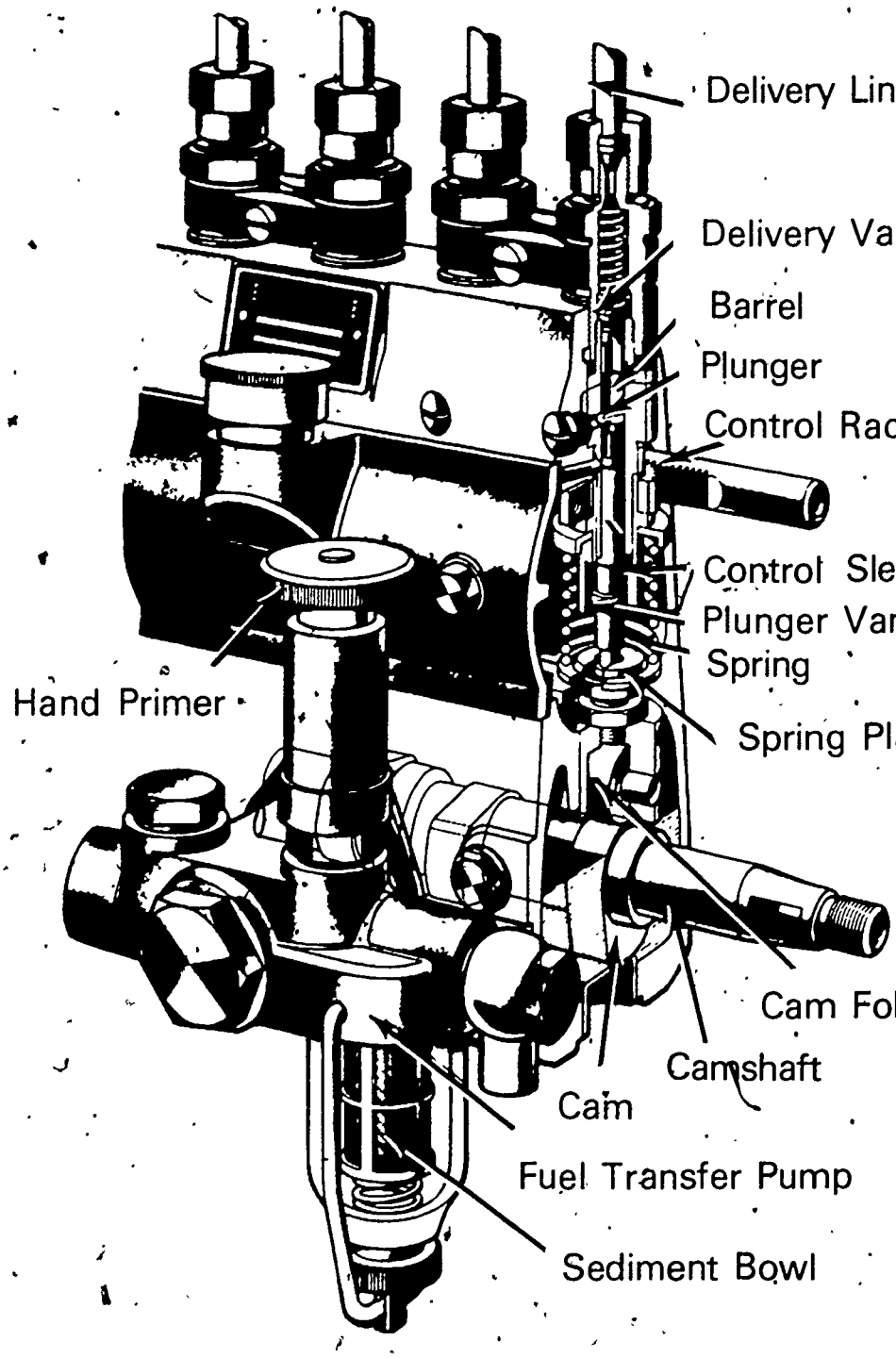

Parts And Design Of Pumping Element

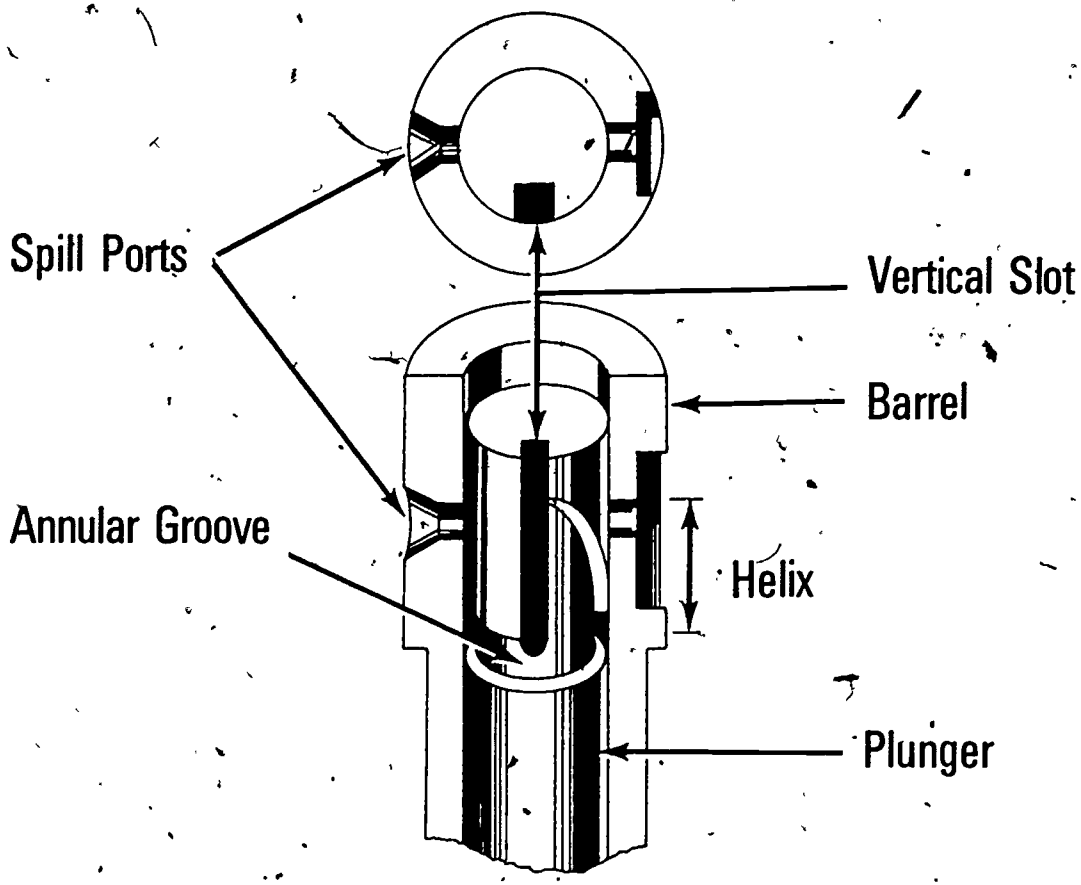

Control Rack And Sleeve

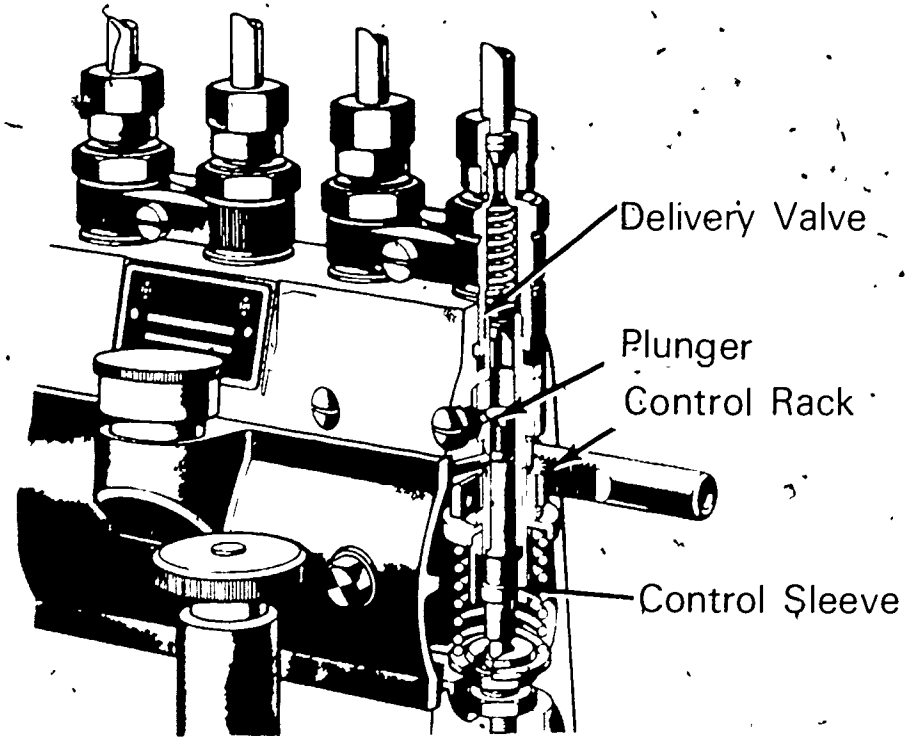

Control Rack, Sleeve, and Delivery Valve

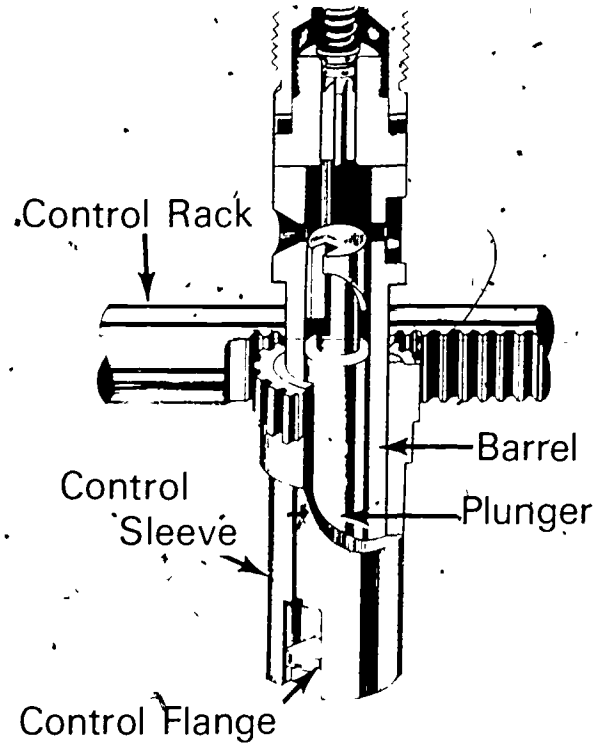

Plunger Rotation Mechanism.
(American Bosch AMBAC Industries, Inc.)

D:FS-103

Plunger Positions At Fuel Delivery

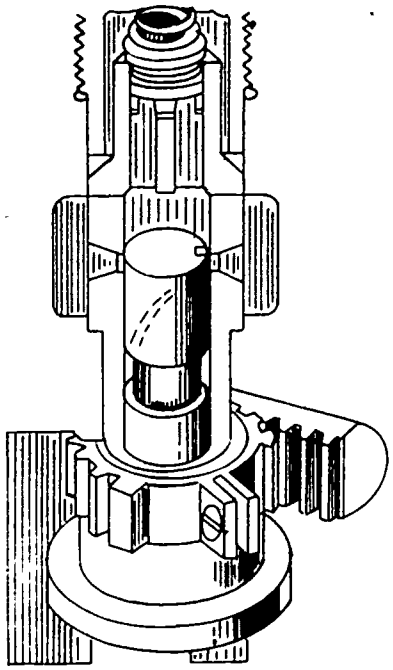

No Fuel Delivery

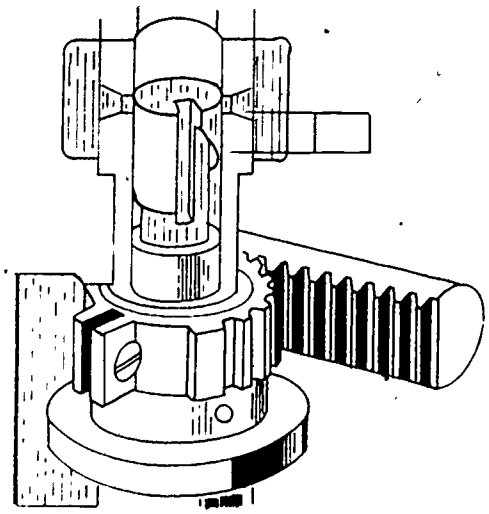

Partial Fuel Delivery

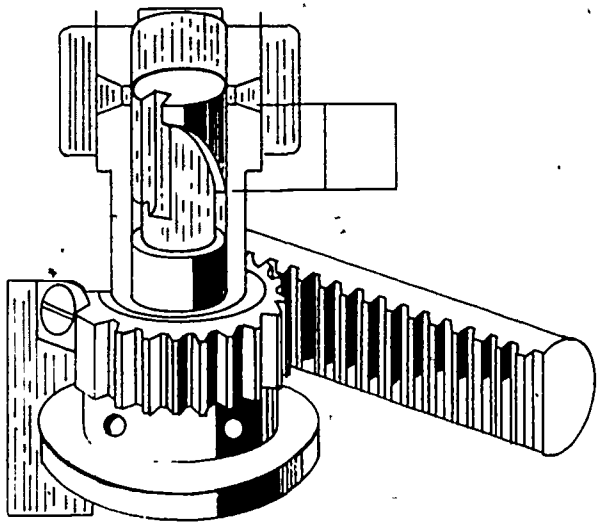

Maximum Fuel Delivery

D-FS-105

TM

Special Rebuild Tools

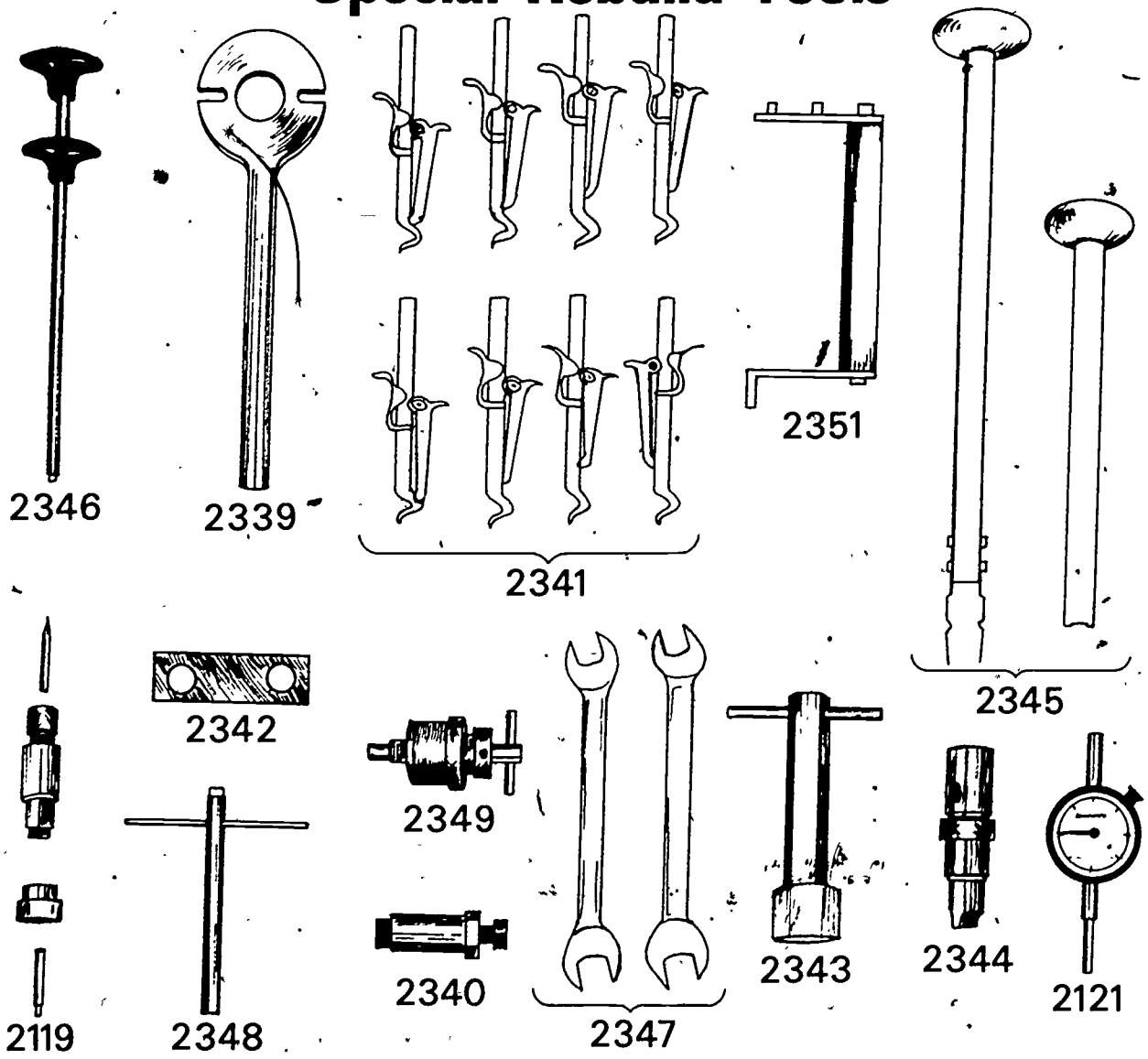

IN-LINE INJECTION PUMP
UNIT IV

JOB SHEET #1--REMOVE AN IN-LINE PUMP

I. Tools and materials

A. Basic hand tool set, including metric

B. Appropriate service manual

C. Clean shop towels

D. Clean line plugs

E. Clean diesel fuel

II. Procedure

(CAUTION: Follow all shop safety procedures.)

(NOTE: Engine should be static timed before parts are removed.)

A. Disconnect and remove accelerator rod and shut-off control cable from governor

(NOTE: Before removing fuel lines, clean pump and connections with clean diesel fuel.)

B. Disconnect injection lines, low pressure lines, and lube oil line from pump

C. Remove any brackets necessary

D. Install protective caps on all fuel lines and pump outlets

E. Remove pump stabilizing brackets

F. Remove adapter mounting bolts which hold pump adapter and pump housing to rear of engine front cover

G. Pull pump to rear to free drive flange tangs from middle disc

H. Lift pump from the engine

IN-LINE INJECTION PUMP
UNIT IV

JOB SHEET #2--OVERHAUL AN IN-LINE PUMP

I. Tools and materials

A. Basic hand tool set, including metric

B. Appropriate service manual

C. Typical tools as recommended by appropriate manufacturer

(NOTE: The tool numbers listed below are International Harvester.)

1. SE-2339 Wrench, holding, drive flange
2. SE-2340 Remover, governor flyweight damper
3. SE-2341 Holder, tappet
4. SE-2344 Remover and installer, camshaft cylindrical nut
5. SE-2345 Remover and installer, tappet
6. SE-2351 Fixture, pump holding

D. Clean pans

E. Clean shop towels (lint-free)

F. Clean tools

G. Clean work area

H. Clean work bench

I. Clean vise

II. Procedure

A. Disassemble governor

1. Clean the external parts of the pump thoroughly before disassembly
2. Drain fuel and lubricating oil from pump and governor housings
3. Cap or plug fuel and lube oil openings after draining
4. Clean the exterior of the governor and pump housing with clean diesel fuel

JOB SHEET #2

5. Clamp holding fixture SE-2351 in the vise and secure injection pump with two bolts (Figure 1)

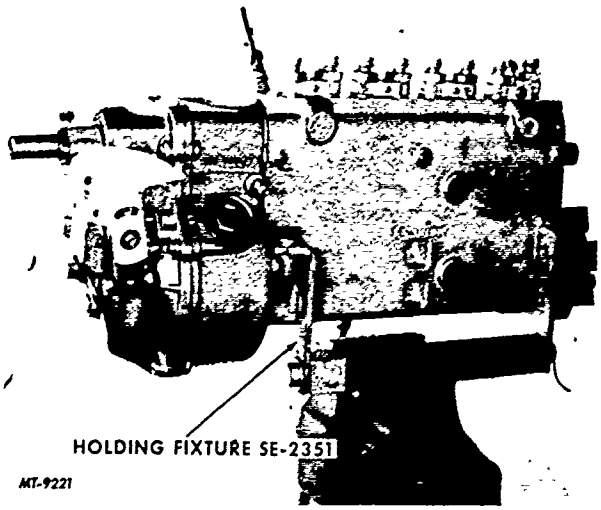

FIGURE 1

6. Use a 10 mm Allen wrench, and remove plug from rack link adjustment access hole in top of governor housing

7. Remove seal and remove rack mounting bolts on pumps with a control rack stop

(NOTE: On pumps with torque capsule, remove seal wire, remove torque capsule cover and gasket, and remove torque capsule mounting screw bushings. See Figure 2.)

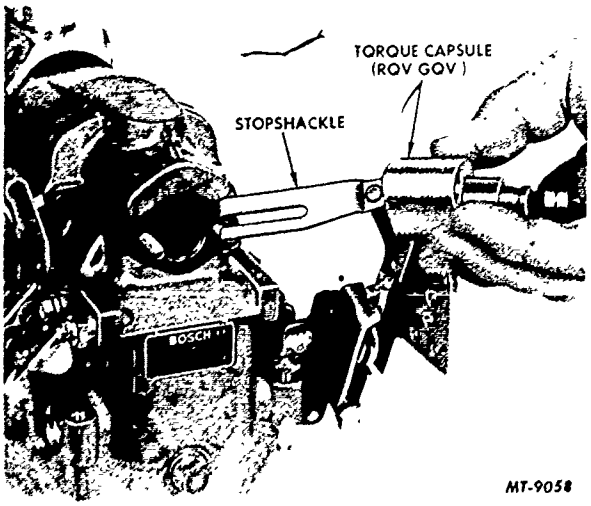

FIGURE 2

JOB SHEET #2

8. Move accelerator lever fully back against low idle stop screw

9. Reach through the rack link access hole with a small screwdriver (Figure 3)

10. Pry stop shackle aside lightly (right side as viewed from the rear of pump) and disengage stop shackle from rocker arm pin (Figure 3)

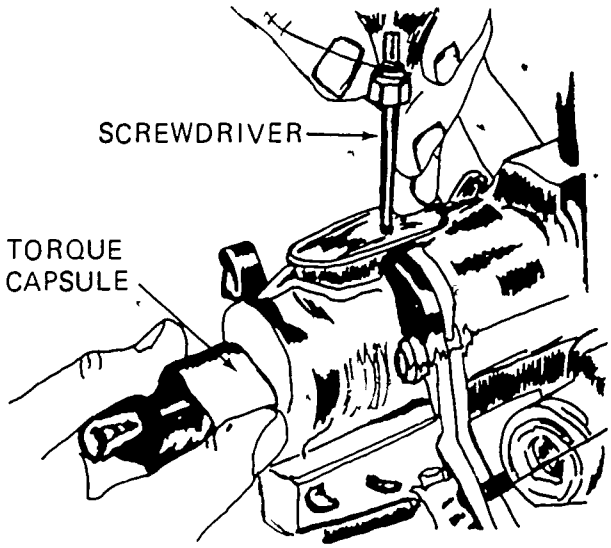

FIGURE 3

11. Pull control rack stop or torque capsule to the rear to clear mounting studs

12. Rotate assembly approximately 45 degrees counterclockwise and slide out of governor housing

13. Remove slotted screw guide ~~pin~~ from governor cover (Figure 4)

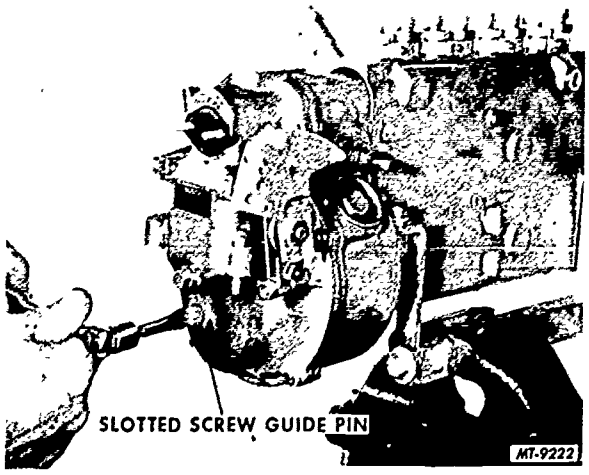

FIGURE 4

JOB SHEET #2

14. Remove mounting screws and take off governor cover (Figure 5)

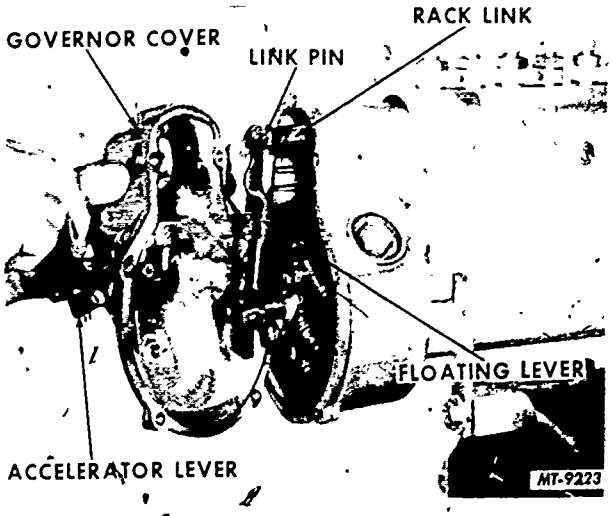

FIGURE 5

15. Operate accelerator lever to release linkage

16. Remove cotter pin and link pin

17. Disconnect floating lever from rack link

18. Pull top of floating lever back and down to remove floating lever and slider from adjusting pin

19. Raise tabs on lock washer and remove double-nutted thru-bolt and adjusting pin from the governor flyweight assembly (Figure 6)

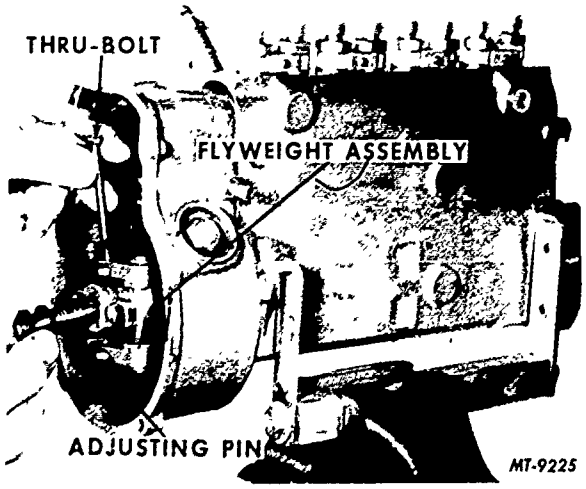

FIGURE 6

JOB SHEET #2

20. Raise the tabs on the lock plates

21. Remove the two cap screws

22. Take out the adjusting pin guide bushing

23. Use the SE-2344 remover tool on the slotted cylindrical nut and SE-2339 holding wrench to hold the camshaft (Figure 7)

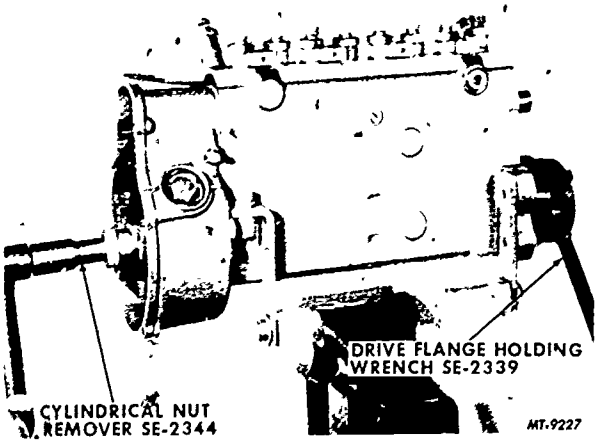

FIGURE 7

24. Remove the cylindrical nut and spacer shim

25. Wire the nut and shim together

26. Install the SE-2340 governor flyweight remover tool (Figure 8)

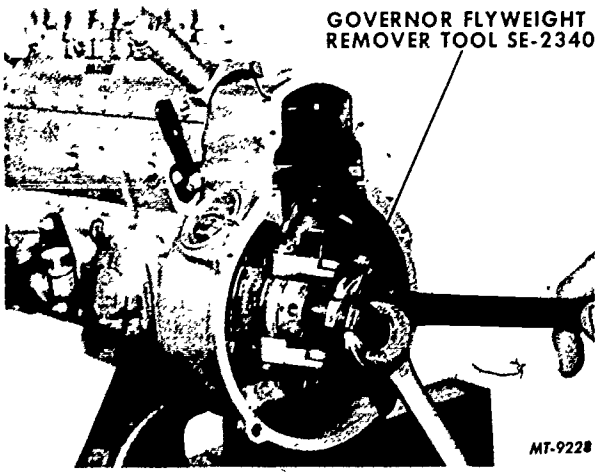

FIGURE 8

JOB SHEET #2

27. Remove the flyweight assembly

(NOTE: Do not disassemble any further.)

28. Remove the rack link, link bracket, and spring from the rear of the control rack to remove the governor housing

B. Disassemble in-line pump

(NOTE: The main body contains several fittings, bushings, and plugs on which Loc-Tite has been used. Do not remove these parts unless they are leaking. Among these are the inlet fuel adapter, the fuel gallery plug, the lube oil inlet bushing, and the bleeder valve bushing.)

1. Remove the side cover

2. Remove side cover gasket from cover and housing

3. Remove transfer pump and gasket

4. Install eight SE-2341 tappet holder tools (Figure 9) inside of pump to hold all tappets up from the camshaft

(NOTE: To prevent tool breakage, lift each tappet by rotating camshaft before installing holder tool.)

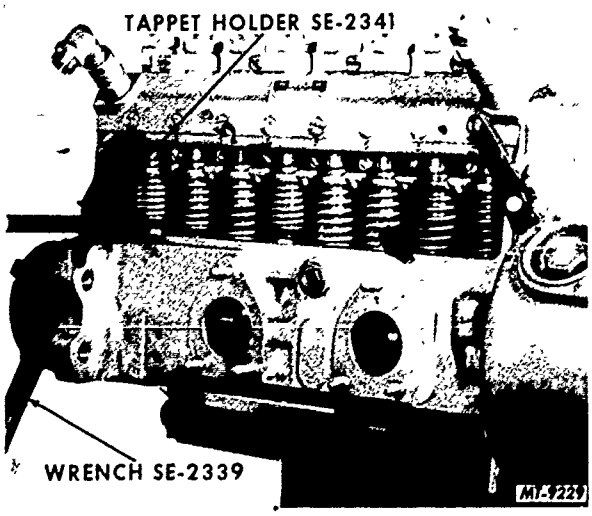

FIGURE 9

JOB SHEET #2

5. Remove camshaft nut and washer using SE-2339 holding wrench to hold drive flange (Figure 10)

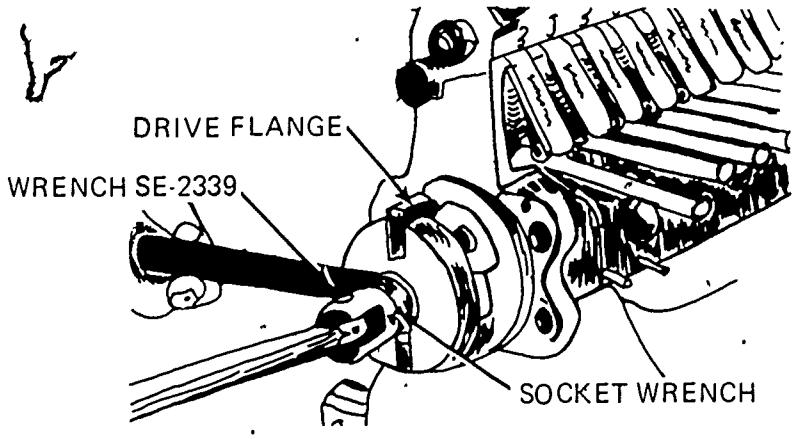

FIGURE 10

6. Remove the drive flange by using a gear puller or by removing the two socket head set screws, flat washers, and lock washers from the drive flanges; reinstall the set screws and place two steel strips behind the drive flange; run the screws in evenly until flange is removed

   (NOTE: Do not lose the woodruff key.)

7. Rotate pump in holder so that the tappet holder tools are pointing upwards

8. Remove the two camshaft center bearing screws from the bottom of the pump

9. Use a large screwdriver and remove the four flat head screws from camshaft front bearing retainer

10. Remove retainer

11. Remove camshaft, including center and end bearings from front of pump

12. Use a 5/8" socket and drive the eight base plugs inside the governor housing and remove them

13. Use the SE-2345 tappet remover tool and push the roller tappet up (Figure 11)

JOB SHEET #2

14. Remove tappet holder tool SE-2341 (Figure 11)

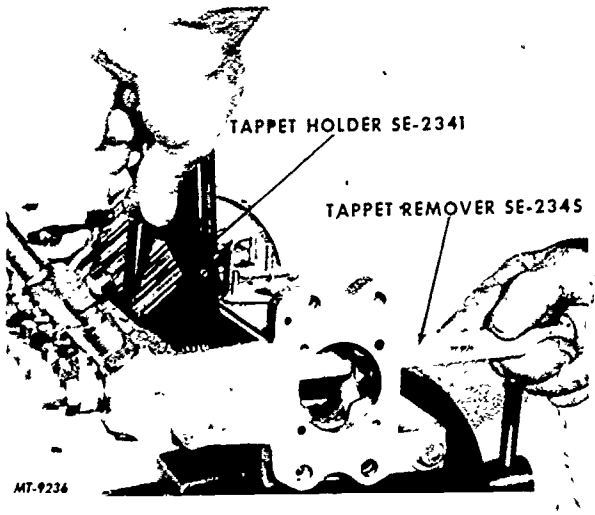

FIGURE 11

15. Remove roller tappet assemblies from pump

(NOTE: Keep parts in order.)

16. Remove keepers, plunger springs, upper spring seats, and plungers (Figure 12)

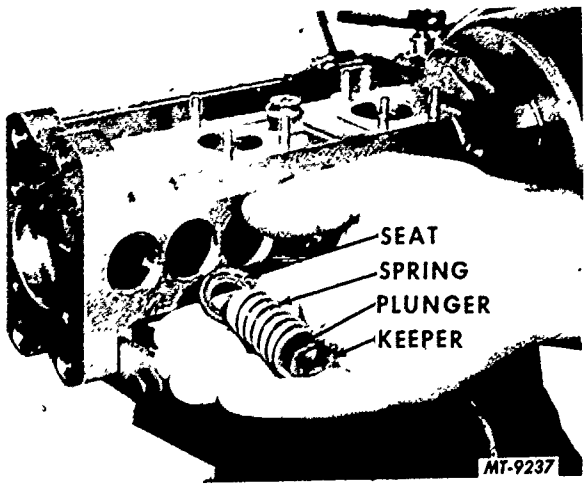

FIGURE 12

JOB SHEET #2

17. Remove the control sleeves (Figure 13)

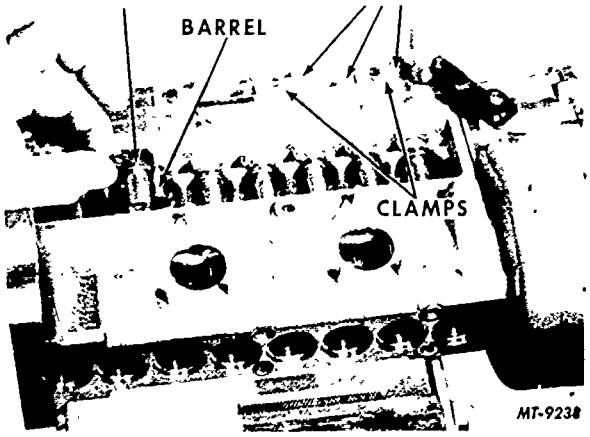

18. Remove delivery valve holder clamps; use a 7/8" socket and remove the holders

19. Lift up on the barrels from inside the pump housing (Figure 14)

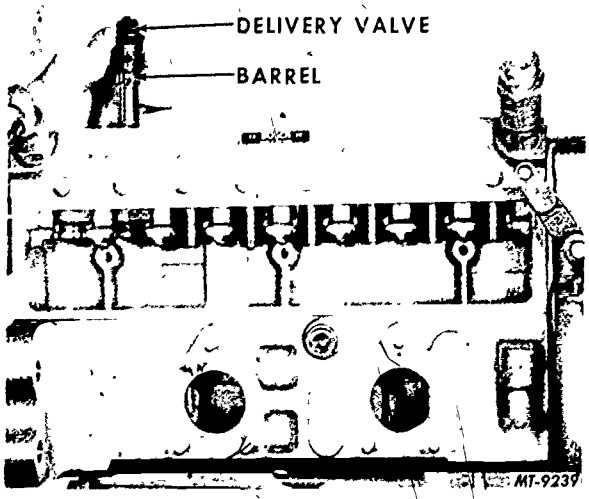

FIGURE 14

20. Remove the delivery valves, springs, fillers, and gaskets

    (NOTE: These parts are mated at assembly--keep them in order.)

21. Remove the control rack positioning screw

22. Pull control rack from the pump housing

23. Remove the control rack end plug

IN-LINE INJECTION PUMP
UNIT IV

JOB SHEET #3--CLEAN AND INSPECT IN-LINE PUMP COMPONENTS

I. Tools and materials

A. Appropriate service manual

B. Clean shop towels (lint-free)

C. Crocus cloth

D. Clean diesel fuel

E. Clean parts tray

II. Procedure

(CAUTION: Follow all shop safety procedures.)

A. Clean and inspect all parts before reassembling to the pump

B. Use clean fuel oil to wash parts

(NOTE: When inspecting for damage or wear, it is good practice to replace any part that is questionable.)

C. Look for the following items when inspecting for damage or wear

1. Governor housing and cover should be inspected for cracks, stripped threads, and burrs

2. Governor weight assembly should be checked for worn bell cranks, damaged weights, stripped nuts, and worn springs

3. Damper hub assembly should be checked for condition of rubber bumpers

4. Curve template sliding parts should not bind any grooves or pressure marks or curve should be smoothed with fine emery

5. Adjusting pin should be inspected for wear and replaced if any is visible

6. Pump housing should be inspected for cracks, chips, overtorquing or stripped screw threads; if the housing leaks, it cannot be repaired

7. Plungers and barrels should be inspected for scoring and scratches

8. Barrels and plungers can be tested by washing in test oil, and pulling the plunger part way out of the barrel; the plunger must fall back slowly by its own weight

JOB SHEET #3

9. Delivery valve and seat should be replaced if any damage is present

10. Roller tappets can be polished with crocus cloth; if tappets do not polish out, they must be replaced

11. Camshaft should be inspected for grooving on cams and bearing surfaces; if damaged, the camshaft must be replaced

12. Roller bearings should be replaced if worn

13. Control rack needs to be checked for binding in the housing; the gear teeth should be checked for burrs and scratches

14. Control sleeves can be polished and reused if only minor damage is present

15. Spring can be reused if not broken or rusted

16. Spring keepers can be reused unless bent or worn

17. Base plugs can be reused unless they are known to be leaking

18. Replace all gaskets, seals, and O-rings

IN-LINE INJECTION PUMP
UNIT IV

JOB SHEET #4--REASSEMBLE AN IN-LINE PUMP

I. Tools and materials

A. Basic hand tool set, including metric

B. Appropriate service manual

C. Typical tools as recommended by appropriate manufacturer

(NOTE: The tool numbers listed below are International Harvester.)

1. SE-1848 Dial indicator set
2. SE-2341 Holder, tappet
3. SE-2342 Gauge, camshaft protrusion
4. SE-2343 Holder, dial indicator
5. SE-2345 Remover and installer, tappet
6. SE-2351 Fixture, pump holding

D. Fuel oil

E. Clean pans

F. Clean shop towels (lint-free)

G. Clean tools

H. Clean work area

I. Clean work bench

J. Clean vise

JOB SHEET #4

II. Procedure

(CAUTION: Follow all shop safety procedures.)

A. Position pump body in SE-2351 holder and clamp upright in vise (Figure 1)

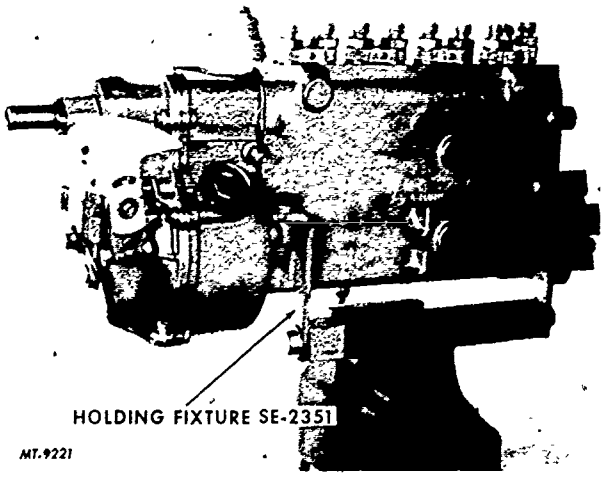

FIGURE 1

1. Place new gasket on governor housing

2. Coat the gasket with a light lubricant and install the governor housing by tapping lightly with a soft hammer

3. Install and stake governor mounting screws

B. Rebuild main pump

1. Place the barrels in correct order, aligning the guide slots with pins in pump housing

   (NOTE: Prelubricate with fuel oil while installing.)

2. Install delivery valves and seats, noting that the flat is located on valves for the four idling cylinders (cylinders numbered 2, 3, 5, 8)

3. Install delivery valve gasket

4. Install springs

5. Install fill piece and holders

6. Use new O-rings and prelubricate with fuel oil

JOB SHEET #4

7. Install delivery valve holders finger tight

8. Attach rack link bracket and rack link to the rack

9. Place rack spring and washers in place on rack

10. Install the control rack through the governor and into the pump housing

    (NOTE: The rack spring is important; it takes up lost motion in the internal pump parts and serves to retract rack if other linkage should fail.)

11. Make sure the rack is free and secure it with the rack positioning screw

12. Rotate pump so the tappet cover side is up

13. Install control sleeves on barrels (Figure 2)

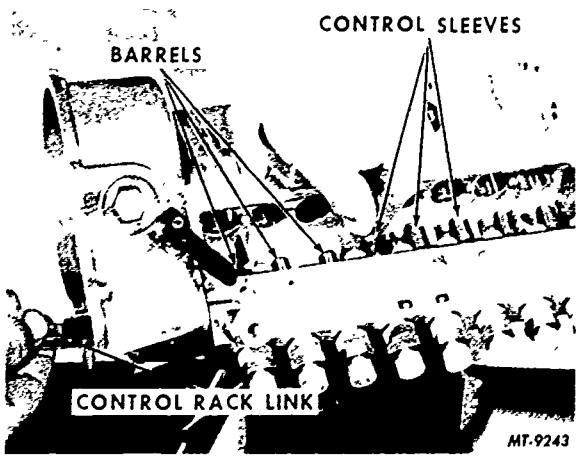

FIGURE 2

14. Center all eight control sleeves on the rack segments

15. Move the control rack to see if any sleeves bind and replace any that do

    (NOTE: When a sleeve binds, replace with the next smaller size.)

16. Start at the drive end and torque #1 through #8 delivery valve holders 22 to 25 ft. lbs.

    (NOTE: Torque twice.)

17. Install the upper spring seats and springs

JOB SHEET #4

18. Use the plunger installer tool (Figure 3)

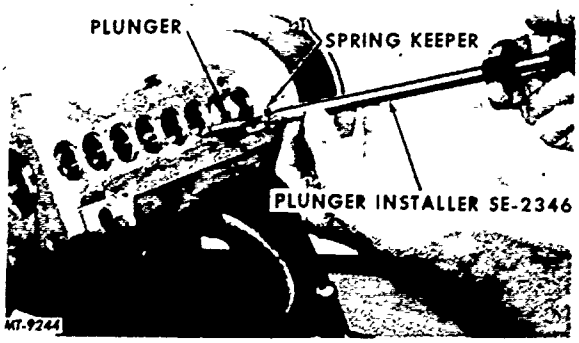

FIGURE 3

19. Place the spring keeper on the tool

20. With marked tong of plunger toward side cover opening and open end of spring keeper away from side cover opening, install plungers and spring keepers in their respective barrels

21. Align the plunger tong with the control slot

22. Use the SE-2345 tappet installation tool, taking care to keep the roller pin flush with the tappet

23. Compress the plunger springs with SE-2345 tappet installation tool

24. Position all eight SE-2341 tappet holder tools on side of pump housing to hold all tappets in their raised position (Figure 4)

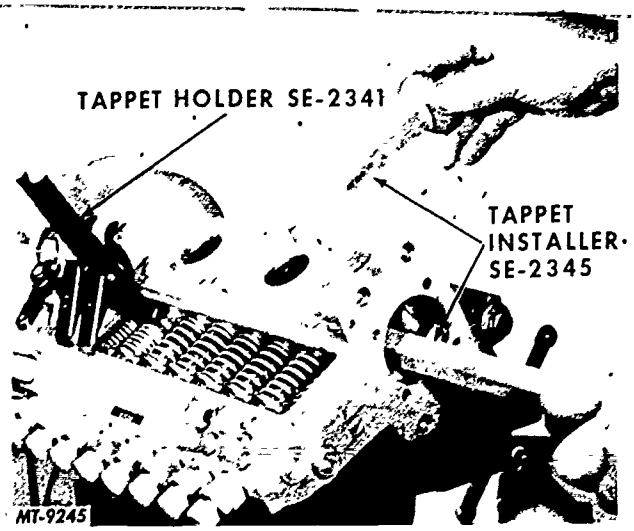

FIGURE 4

JOB SHEET #4

25. Place a small dab of grease on the center bearing to hold it to the camshaft

26. Install the camshaft into the pump housing

27. Secure the center bearing with two screws through the bottom of the pump housing

28. Use a thin coat of non-hardening sealer on the front bearing retainer and set retainer in place

29. Start all four screws to guide the retainer in place

    (NOTE: Do not use screws to draw the retainer down, just to guide.)

30. Tap retainer into place while turning the camshaft to assure alignment (Figure 5)

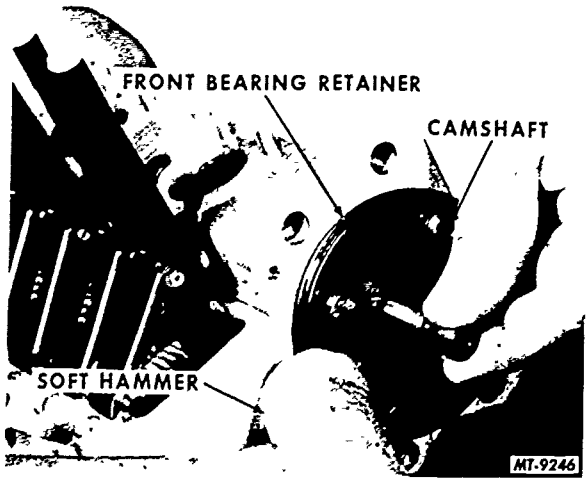

FIGURE 5

31. Tighten mounting screws securely

JOB SHEET #4

32. Check camshaft end play (Figure 6)

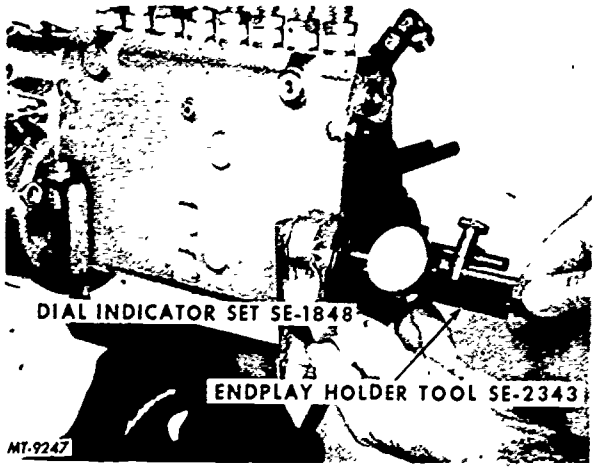

FIGURE 6

33. Screw SE-2343 holder tool onto front end of camshaft

34. Place SE-1848 dial indicator set in holder so indicator will read end play when tool handle is pulled and released

35. Set end play at .02-.06 mm (.0008-.0024)

36. Change end play by adding or removing shims behind the front bearings

37. Check camshaft protrusion (Figure 7)

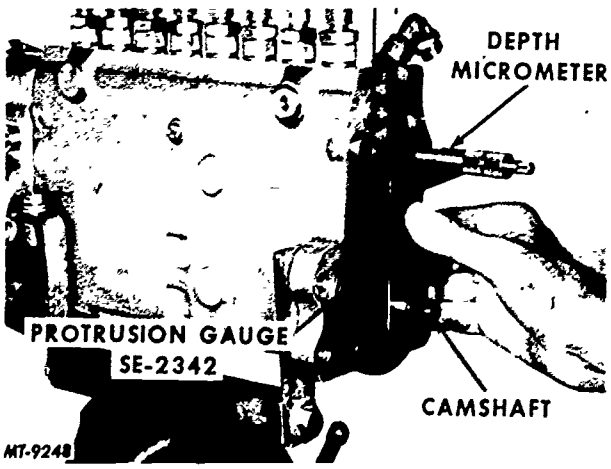

FIGURE 7

38. Check space between the drive coupling and main body; use the SE-2342 protrusion gauge and depth micrometer

39. Place gauge over front end of camshaft

40. Use the depth micrometer and measure from the surface of the tool to the machined surface of the pump housing

JOB SHEET #4

41. Check the distance; it should be 20.7-22.2 mm (.817-.877)

42. Change camshaft protrusion by adding shims under the bearing at the governor end of the camshaft

43. Install woodruff key in camshaft slot

44. Install the drive flange on camshaft

45. Install lock washer and nut and tighten to 60-72 ft. lbs.

    (NOTE: Check the two halves of the drive flange to be sure mating marks are together. Torque the socket head set screws in drive flange 18-25 ft. lbs.)

46. Use the camshaft to release pressure on the SE-2341 tappet holder tools and remove them from the side of the housing

47. Install the base in the bottom of the pump housing using 5/8" or 11/16" socket or similar size wood dowel (Figure 8)

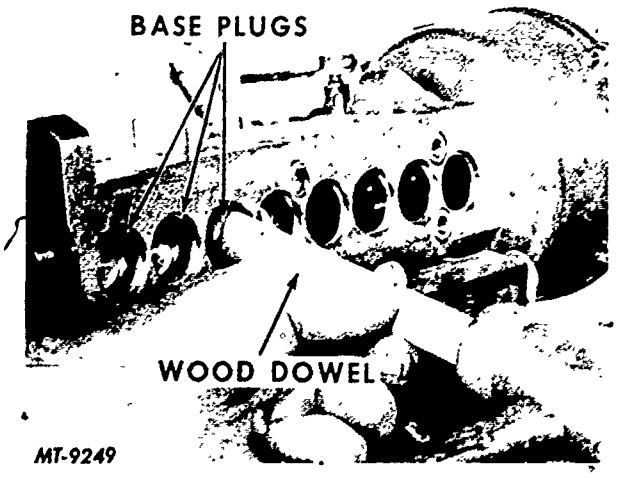

FIGURE 8

48. Seat plugs so they are just past the lower edge of chamfer in the pump housing

49. Install a new gasket and transfer pump to side of pump housing

50. Secure with three mounting nuts and lock washers

    (NOTE: You can check the condition of the transfer pump by pressurizing with air (15-20 psi) and submerging in oil--no leaks are permitted.)

IN-LINE INJECTION PUMP
UNIT IV

JOB SHEET #5--REASSEMBLE THE R.Q.V. GOVERNOR

I. Tools and materials

A. Basic hand tool set

B. Appropriate service manual

C. Typical tools as recommended by appropriate manufacturer

(NOTE: The tool numbers listed below are International Harvester.)

1. SE-2339 Wrench, holding, drive flange

2. SE-2344 Remover and installer, camshaft cylindrical nut

D. Manufacturer's specifications

E. Clean shop towels

II. Procedure

(CAUTION: Follow all shop safety procedures.)

A. Service the governor flyweight assembly as a complete unit (Figure 1)

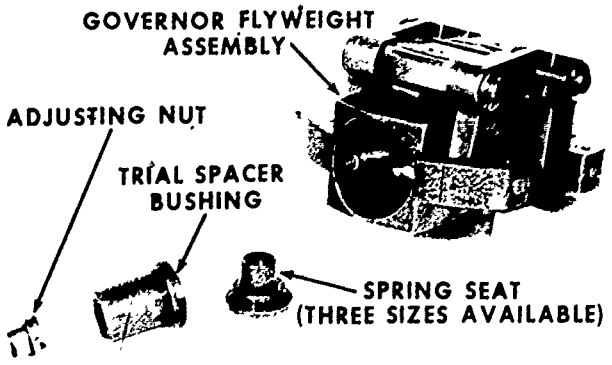

FIGURE 1

JOB SHEET #5

B. Service weight springs, spring seats, and shims individually, as follows

1. Perform a static check on balanced movement of governor weights by making a temporary build-up less the springs, but using the spring seats, trial spacer bushings, and adjusting nuts on each weight as follows

(NOTE: Trial spacer bushings can be purchased from most fuel labs.)

a. Install double-nutted thru-bolt in the weight assembly

b. Apply slight pressure to center of bolt and check for excessive rocking movement in either weights (Figure 2)

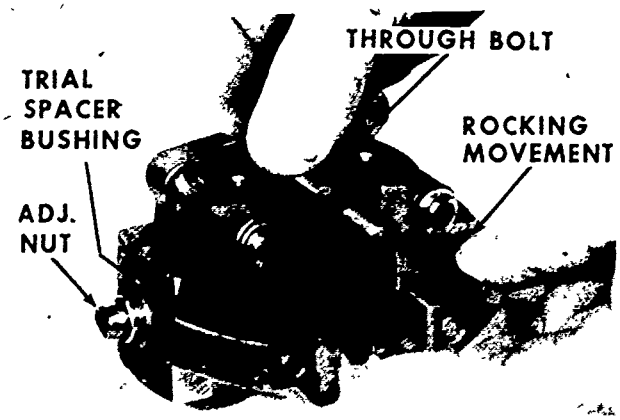

MT-9251 FIGURE 2

c. Use the correct size spring seat so that slight movement in the weights can be equalized

(NOTE: When installing the three different size weight springs, remove the trial spacer bushings.)

d. Reinstall the flyweight springs; always start governor spring reassembly with one shim under the lo-idle (large) spring, two shims under the intermediate spring, and no shims under hi-idle (small) spring

(NOTE: The intermediate spring shims may change when the pump is calibrated; always reinstall the same color spring as was removed.)

e. Install the outer spring seat and adjusting nut

JOB SHEET #5

f. Install the outer spring seat and adjusting nut (Figure 3)

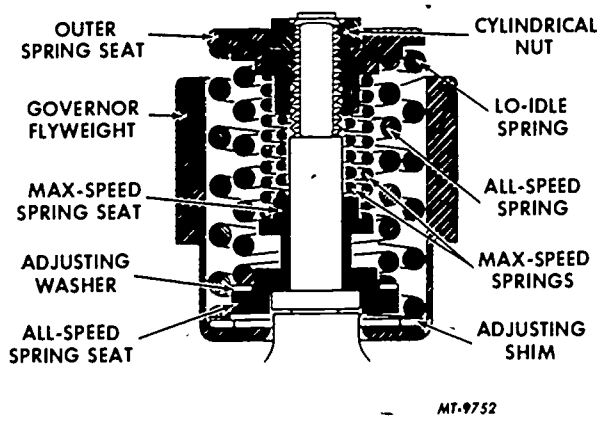

FIGURE 3

(NOTE: The adjustment range is from flush to not more than 2.5 mm [.100"], protrusion of the threaded bolt [2 to 3 clicks]. Post protrusion should be approximately equal on both spring sets.)

C. Inspect damper buffers for damage and pry up the hub to inspect and replace as a set, if needed, before installing weight assembly on camshaft (Figure 4)

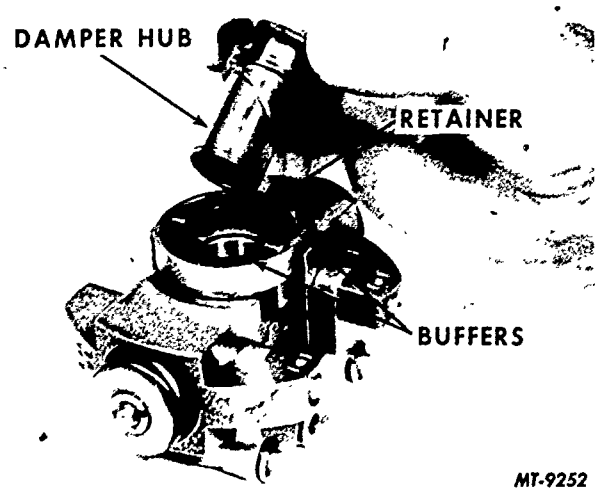

FIGURE 4

JOB SHEET #5

D. Assemble the prelubricated buffers in damper retainer and place damper hub on weight assembly (Figure 4)

1. Install the flyweight assembly to the camshaft (Figure 5)

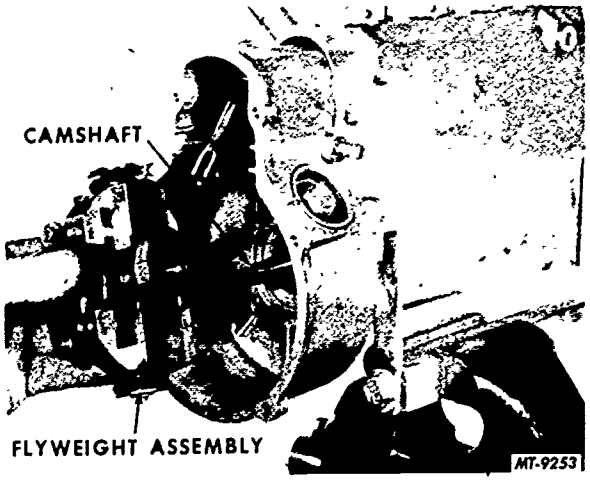

FIGURE 5

2. Install spacer shim and secure to camshaft with slotted cylindrical nut, using the SE-2344 and SE-2339 rebuild tools, and torque the nut to 37-43 ft. lbs.

3. Check action of damper by holding camshaft, grasping weight assembly, and twisting to note for slight movement

4. Use a thicker spacer shim to obtain more movement or thinner shim to decrease movement

5. Install the adjusting pin guide bushing

6. Install adjusting pin assembly; temporarily secure with the thru-bolt at this time

7. Install slider and floating lever; open slot of the floating lever to right, and pin floating lever to rack link to hold in place

JOB SHEET #5

8. Measure the slider-to-housing distance (Figure 6)

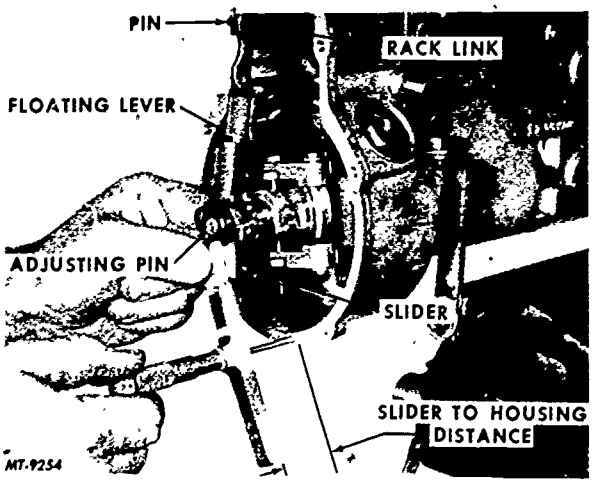

FIGURE 6

9. Take measurement by measuring from the back of the slider to the governor mating surface with no gasket 38.8 mm, 1.524 +/- .015"

10. Change the distance by turning the screw inside of the adjusting pin; one-half turn of the adjusting screw moves sliding block approximately .5mm, .020"

11. Secure the double-nutted thru-bolt in the governor weight assembly by installing the lock washer and nut; move the rack and check for freedom of movement

12. Back out the hi-idle adjusting screw

13. Measure the setting of the curve plate (Figure 7)

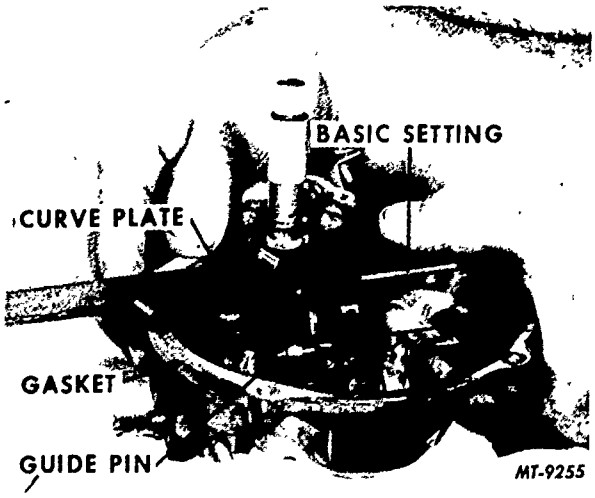

FIGURE 7

JOB SHEET #5

14. Take measurement from the governor cover surface (gasket in place) to the guide pin shaft when the guide pin is in maximum fuel position and bottomed in curve plate; setting should be 21.5-21.9 mm (.847-.863"); add shims to decrease the setting (Figure 8)

    (NOTE: Make sure cotter pin has been installed between the rack link and floating lever.)

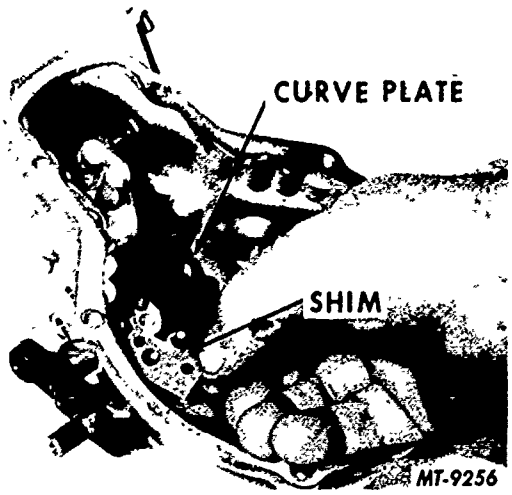

FIGURE 8

15. Install governor cover to housing

16. Apply a non-hardening sealer to the guide stud screw and install it in the rear of the governor cover

17. Install accelerator lever

18. Place the accelerator lever fully back against the lo-idle stop screw

19. Install torque capsule into governor housing, then rotate torque capsule 45 degrees in a counterclockwise direction

20. Slide torque capsule into governor housing until stop shackle clears governor floating lever, then rotate capsule clockwise until in a horizontal position

21. Move the accelerator lever into a vertical position

JOB SHEET #5

22. Use a hook made from light wire and reach down through the adjustment access hole and lift up the stop shackle to engage the slot in the stop shackle with the rocker arm pin (Figure 9)

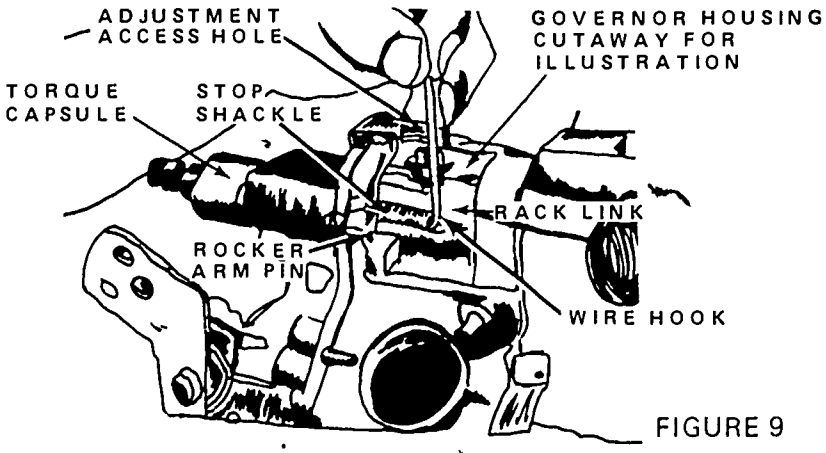

FIGURE 9

23. Secure the torque capsule

E. Check the torque capsule assembly

1. Hold the accelerator lever fully forward (Figure 10)

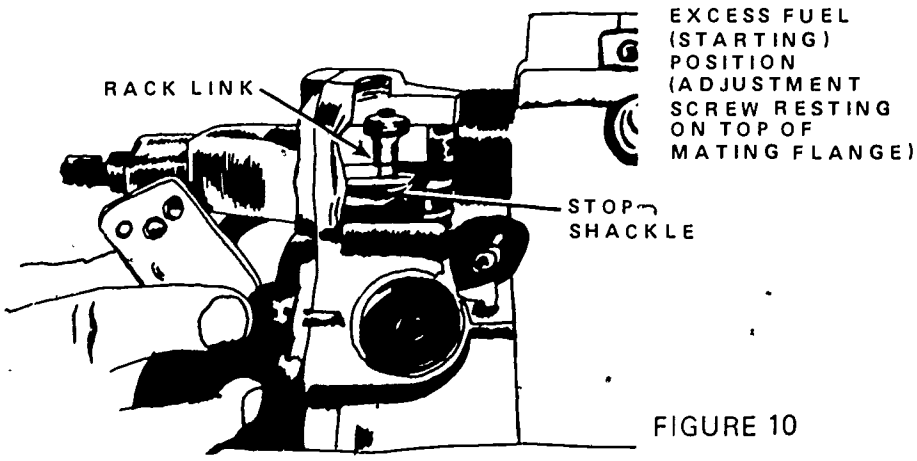

FIGURE 10

2. Move fuel shut-off lever to the rear slowly; if the installation is correct, a distinct click will be heard as the rack moves back

(NOTE: If correct positions cannot be obtained, check for proper engagement of slot in stop shackle to rocker arm pin.)

JOB SHEET #5

3. Check the rack position by removing the plug from the front of pump housing (drive end); at excess fuel position (starting) the rack should extend 9.525 mm (.375") forward of the threaded guide bushing, at full load position; the end of the rack should lie approximately 3.175 mm (.125") inside of the threaded guide bushing on pump housing (Figure 11)

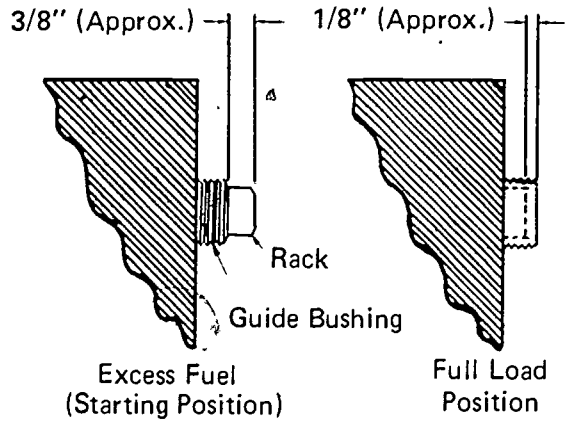

FIGURE 11

4. Mount engine adapter to front of pump

IN-LINE INJECTION PUMP
UNIT IV

JOB SHEET #6--BENCH TEST AN IN-LINE PUMP

I. Tools and materials

A. Basic hand tool set

B. Appropriate service manual

C. Test stand adapters

D. Test stand manual

E. Pump tools

F. Special tools

G. Pump specification sheet

H. Clean shop towels (lint-free)

I. Safety glasses

II. Procedure

(CAUTION: Follow all shop safety procedures.)

A. Use the appropriate manual for the pump you are working on and follow the procedure outlined in it

B. Use the following chart and fill in the appropriate blanks when testing the pump

JOB SHEET #6

Engine Size -
Calibrating Stand -
Accessory Set -
Calibrating Oil -
Supply Pressure -
Nozzle Opening Pressure -

Pump Type and # -
Pre-Stroke Setting - Plunger -
Camshaft Phasing -

Transfer Pump Pressure
@ 1500 RPM

CHECK	RPM	BHP	BHP	BHP
1. Governor Cutoff, Rack Position				
2. Hi-Idle, Rack Position				
3. Maximum Fuel a. Delivery (Average) b. Bal. Max. Spread c. Rack Pos. (Ref.)				
4. Transitions, Delivery (Average) a. High Speed @ 1-15mm^3/Stk. 2,3,5,8 Cylinders b. Low Speed @ 1-5mm^3/Stk. 2,3,5,8 Cylinders				
5. Torque Compensation a. Beginning Rack Pos. b. Max. Deliv. (Avg.) c. End Rack Position 1) 2)				
6. End of Excess Fuel, Rack Position				
7 Lo-Idle, Rack Position				
8. Shut-Off, Rack Position				
9 Static Timing				

IN-LINE INJECTION PUMP
UNIT IV

NAME _____

TEST

1. Match the terms on the right with their correct definitions.

_____a. Sends fuel at low pressure through filters to the injection pump	1. Annular groove
_____b. Machined recess forming a ring on pumping plunger	2. Helix
_____c. Located at right angles to the plane of the supporting surface	3. Gallery
_____d. Spiraled, machined recess on pumping plunger	4. In-line injection pump
_____e. Long, narrow fuel or oil passage	5. Transfer pump (supply pump)
_____f. Device which limits fuel supply to engine, preventing excess smoke	6. Vertical slot
_____g. Uses an individual pump for each cylinder with pumps mounted-in-line	7. Aneroid

2. Match the main parts of an in-line pump with their correct names by placing the correct numbers in the appropriate blanks.

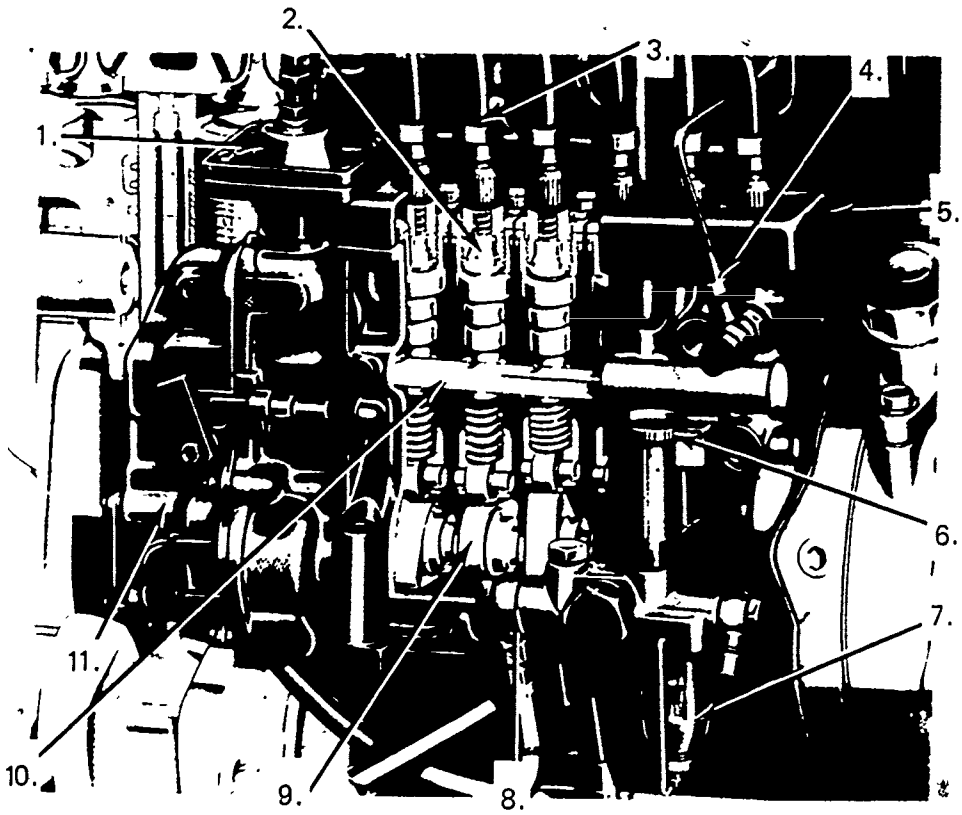

_____a. Control rack

_____b. Governor

_____c. Sediment bowl

_____d. Aneroid

_____e. Fuel transfer pump

_____f. Individual pumping element

_____g. Hand primer

_____h. Injection line

_____i. Pump housing

_____j. Leak-off line

_____k. Camshaft

3. Arrange in order the steps in which fuel flows from supply tank to delivery by placing the correct sequence number in the appropriate blank.

_____a. Pumping element meters fuel at high pressure to each injection nozzle for delivery to combustion chamber

_____b. Transfer pump forces fuel under low pressure through secondary filter and through final stage filter to each injection pumping element

_____c. Fuel is drawn from supply tank through primary filter by fuel transfer pump

4. State the purpose of a hand primer.

_____

_____

5. Select true statements concerning the purpose of a fuel transfer pump by placing an "X" in the appropriate blanks.

_____a. Draws fuel from supply tank through secondary filter

_____b. Assures fuel supply to injection pumping elements

6. Select true statements concerning the operation of an injection pump by placing an "X" in the appropriate blanks.

_____a. Plunger type pump has engine driven camshaft rotating at half engine speed

_____b. Roller cam followers, riding on cam lobes, operate the plungers to supply low pressure fuel through delivery valves to injection nozzles

7. Identify parts and design features of a pumping element.

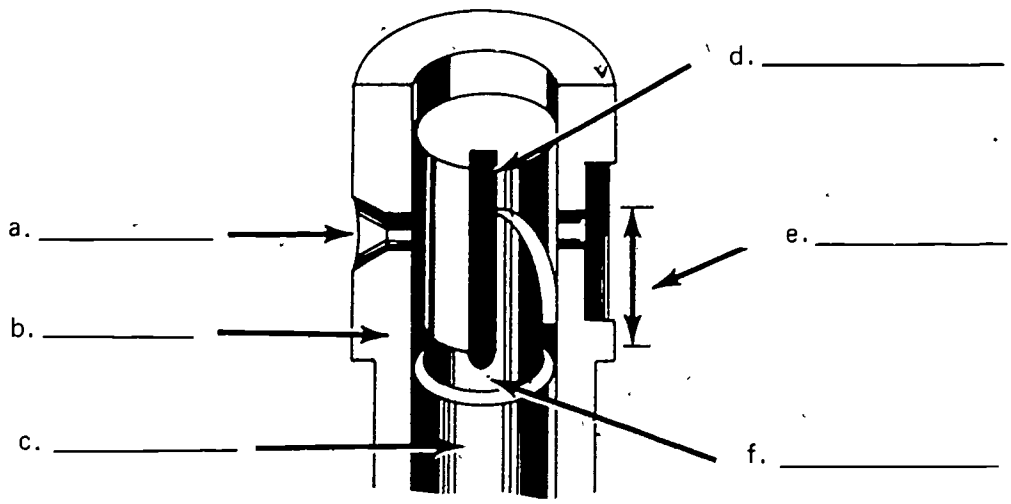

8. Complete the following list of statements concerning the operation of the control rack and sleeve.

a. Governor moves rack to regulate speed of engine

b. The sleeve, rotated by the control rack, is fitted over the barrel and connects to the _____

_____

c. Plunger rotation opens or closes the helix which meters _____

_____

9. State the purpose of a delivery valve.

_____

_____

10. Identify the plunger and rack positions.

_____a. No fuel delivery

_____b. Partial fuel delivery

_____c. Maximum fuel delivery

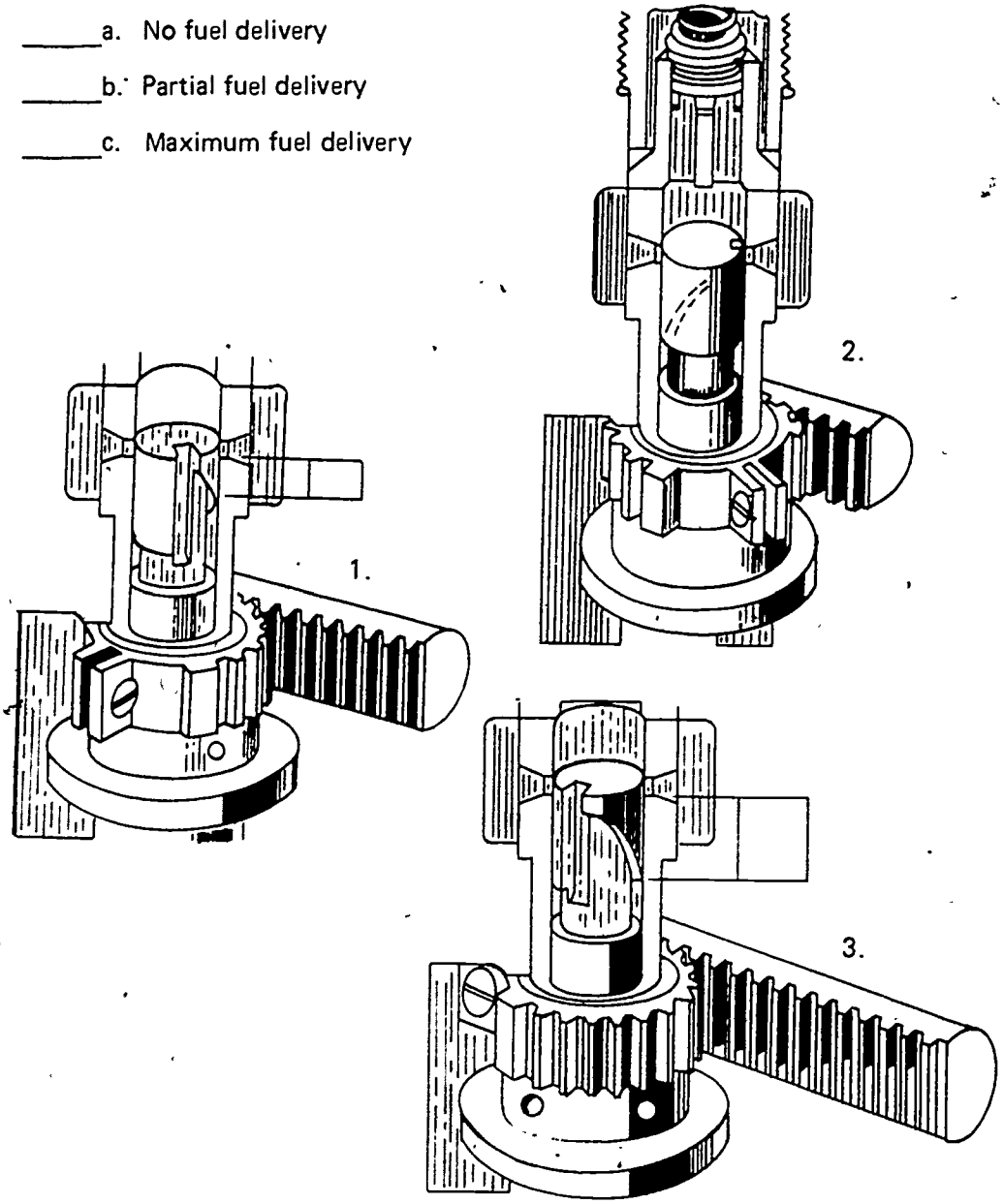

11. Identify typical tools used for overhauling an in-line injection pump.

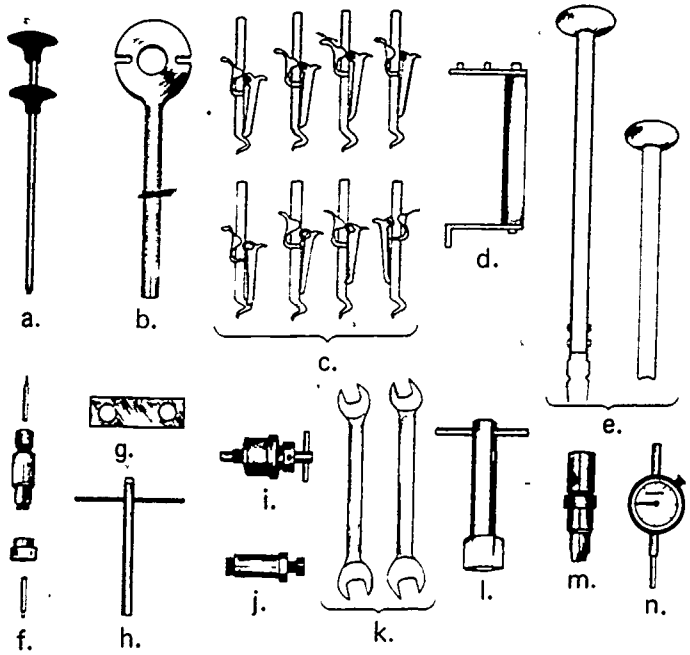

a. _____

b. _____

c. _____

d. _____

e. _____

f. _____

g. _____

h. _____

i. _____

j. _____

k. _____

l. _____

m. _____

n. _____

12. Demonstrate the ability to:

    a. Remove an in-line pump.

    b. Overhaul an in-line pump.

    c. Clean and inspect in-line pump components.

    d. Reassemble an in-line pump.

    e. Reassemble the R.Q.V. governor.

    f. Bench test an in-line pump.

    (NOTE: If these activities have not been accomplished prior to the test, ask your instructor when they should be completed.)

IN-LINE INJECTION PUMP
UNIT IV

ANSWERS TO TEST

1. a. 5
   b. 1
   c. 6
   d. 2
   e. 3
   f. 7
   g. 4

2. a. 10
   b. 11
   c. 7
   d. 1
   e. 8
   f. 2
   g. 6
   h. 3
   i. 5
   j. 4
   k. 9

3. a. 3
   b. 2
   c. 1

4. Hand primer on fuel transfer pump can be operated by hand to pump fuel when bleeding the system

5. b

6. a

7. a. Spill ports
   b. Barrel
   c. Plunger
   d. Vertical slot
   e. Helix
   f. Annular groove

8. b. Vanes on the plunger
   c. The quantity of fuel for delivery to cylinder

9. The delivery valve creates a sudden pressure drop in the delivery line causing the injector nozzle valve to close instantly

10. a. 2
    b. 1
    c. 3

11. a. Remover and installer, barrel plunger
    b. Wrench, holding, drive flange
    c. Holder, tappet
    d. Fixture, pump holding
    e. Remover and installer, tappet
    f. Rack gauge holder
    g. Gauge, camshaft protrusion
    h. Wrench, governor spring adjusting

i. Remover and installer, governor spring and adjusting screw
j. Remover, governor flyweight damper
k. Wrench, tappet adjusting
l. Holder, dial indicator
m. Remover and installer, camshaft cylindrical nut
n. Dial indicator (inch reading)

12. Performance skills evaluated to the satisfaction of the instructor

UNIT INJECTOR
UNIT V

UNIT OBJECTIVE

After completion of this unit, the student should be able to list functions of a unit injector and distinguish between no injection and full injection. The student should also be able to demonstrate the ability to disassemble, assemble, test, and install a unit injector. This knowledge will be evidenced by correctly performing the procedures outlined in the job sheets and by scoring 85 percent on the unit test.

SPECIFIC OBJECTIVES

After completion of this unit, the student should be able to:

1. Match terms related to a unit injector with their correct definitions.
2. Match the parts of a unit injector with their correct part names.
3. List functions of a unit injector.
4. Arrange in order the steps in fuel flow through the unit injector fuel system.
5. Distinguish between a crown valve and needle valve.
6. Distinguish between no injection and full injection.
7. Demonstrate the ability to:
   a. Remove unit injector from engine.
   b. Disassemble a unit injector.
   c. Assemble a unit injector.
   d. Test a unit injector.
   e. Install a unit injector.

UNIT INJECTOR
UNIT V

SUGGESTED ACTIVITIES

I. Provide student with objective sheet.

II. Provide student with information and job sheets.

III. Make transparencies.

IV. Discuss unit and specific objectives.

V. Discuss information sheet.

VI. Demonstrate and discuss the procedures outlined in the job sheets.

VII. Demonstrate lapping and cleaning procedures.

VIII. Obtain a chart on unit injectors.

IX. Show a film or film strip on unit injectors.

X. Take a field trip to a Detroit Diesel dealer.

XI. Give test.

INSTRUCTIONAL MATERIALS

I. Included in this unit:

A. Objective sheet

B. Information sheet

C. Transparency masters

1. TM 1--Unit Injector
2. TM 2--Parts of Unit Injector (Needle Valve)
3. TM 3--Fuel Flow Through Unit Injector (Crown Valve)
4. TM 4--Plunger Positions

D. Job sheets

1. Job Sheet #1--Remove Unit Injector from Engine
2. Job Sheet #2--Disassemble a Unit Injector

3. Job Sheet #3--Assemble a Unit Injector

4. Job Sheet #4--Test a Unit Injector

5. Job Sheet #5--Install a Unit Injector

E. Test

F. Answers to test

II. References:

A. *Service Manual, Detroit Diesel Engines.* Detroit, MI: Detroit Diesel Allison, 1975.

B. Dagel, John F. *Diesel Engine Repair.* New York: John Wiley and Sons, Inc., 1982.

C. Foutes, William A. *Diesel Engine Mechanics.* Stillwater, OK: Mid-America Vocational Curriculum Consortium, 1977.

UNIT INJECTOR
UNIT V

INFORMATION SHEET

I. Terms and definitions

A. Spray valve--Serves as a nozzle to atomize fuel sprayed into combustion chamber

B. Helix--Spiraled recess machined into plunger

C. Port--Drilled passage in bushing

D. Control rack and gear--Rack and pinion gear arrangement on unit injector

E. Bushing–Serves as a barrel for the plunger on unit injector

F. Unit injector--Injection pump, injector, and spray valve form a single unit (Transparency 1)

(NOTE: One unit is provided for each cylinder.)

II. Parts of unit injector (Transparency 2)

A. Follower

B. Follower spring

C. Stop pin

D. Filter cap

E. Plunger

F. Gasket

G. Injector body

H. Filter

I. Gear

J. Gear retainer

K. Dowel

L. Control rack

M. Seal

N. Bushing

INFORMATION SHEET

O. Spill deflecter

P. Lower port

Q. Upper port

R. Check valve

S. Check valve cage

T. Valve spring

U. Spring cage

V. Spring seat

W. Needle valve

X. Body unit

Y. Spray tip

Z. Identification tag

III. Functions of unit injector

A. Creates a high fuel pressure

(NOTE: This is needed for efficient injection.)

B. Meters required amount of fuel

C. Atomizes fuel

D. Times injection

E. Injects fuel

(NOTE: Fuel and air are mixed in the combustion chamber.)

IV. Fuel flow through the unit injector fuel system (Transparency 3)

A. Enters injector through a filter cap and filter

B. Passes through drilled passages and ports into supply chamber

(NOTE: The supply chamber is that area between the plunger bushing and the spill deflector, in addition to that area under the injector plunger within the bushing.)

C. Pump pressure forces fuel through small orifices in spray tip

D. Atomized into combustion chamber

INFORMATION SHEET

V. Differences between a crown valve and needle valve (Transparencies 2 and 3)

(NOTE: From the bushing up, the design of these valves is the same.)

A. Crown valve

1. Stacked onto the bushing as follows: check valve, valve cage, and valve seat

2. Inside the valve cage are the valve stop, spring, and injector valve

B. Needle valve

1. Stacked onto the bushing as follows: check valve, valve cage, spring, spring seat, spring cage, and spray tip

2. Inside spray tip is the needle valve

3. Inside spring cage is the spring seat and the valve spring

VI. Differences between no injection and full injection (Transparency 4)

(NOTE: Changing the position of the helices by rotating the plunger increases or decreases the amount of fuel injected into the cylinder.)

A. No injection

1. Control rack out

2. Upper port is not closed by helix

B. Full injection

1. Control rack in

2. Upper port is closed and lower port is closed by helix

Unit Injector

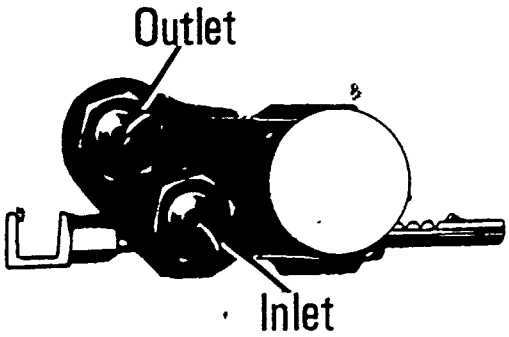

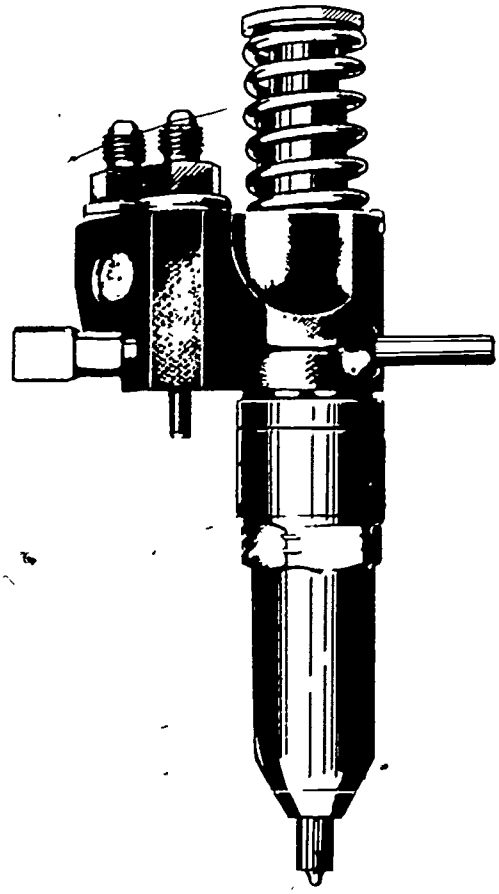

Parts Of Unit Injector

Needle Valve

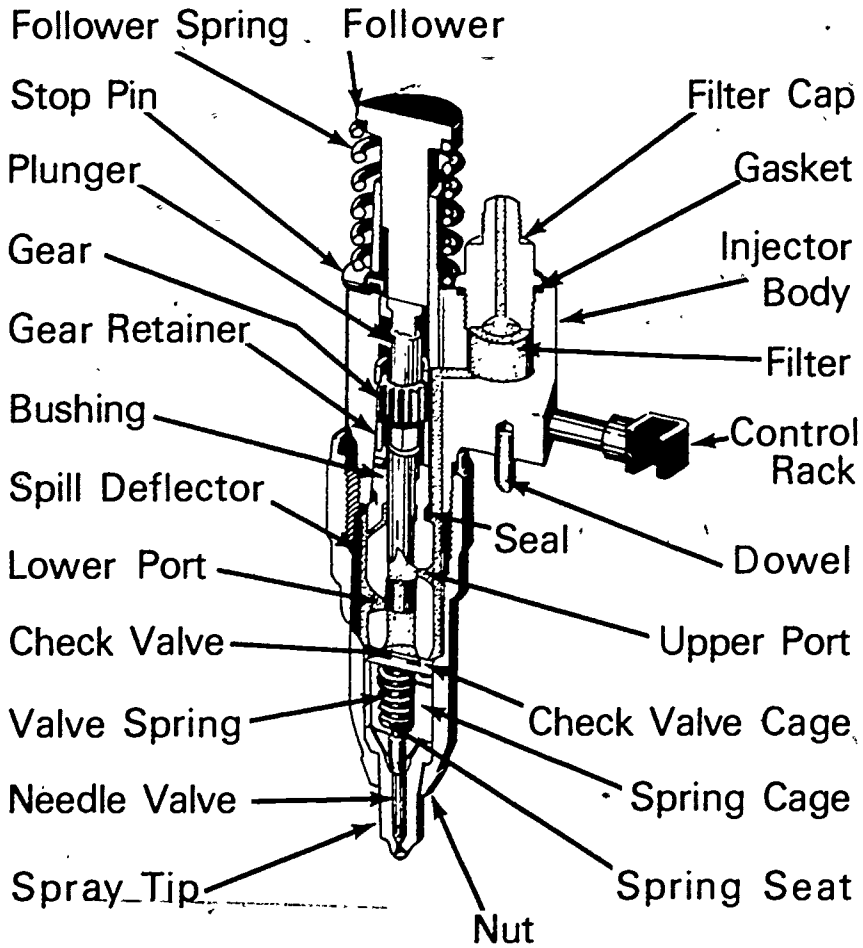

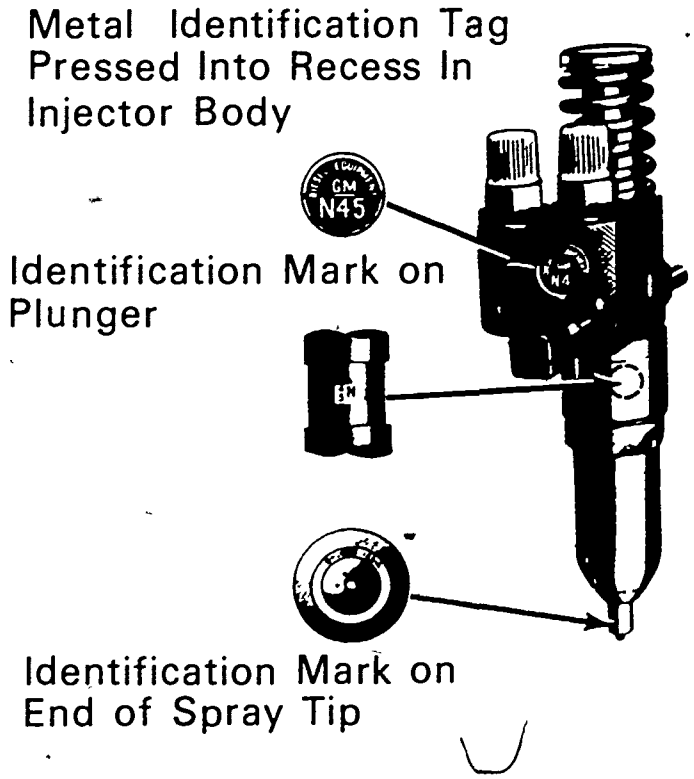

(Note: Fuel injector shown has needle valve installed. See identification tag on injector body to determine type injector valve in use. Refer to service manual for correct procedure when reworking crown valve, needle valve, high valve, or conversion kit service.)

Fuel Flow Through Unit Injector

Crown Valve

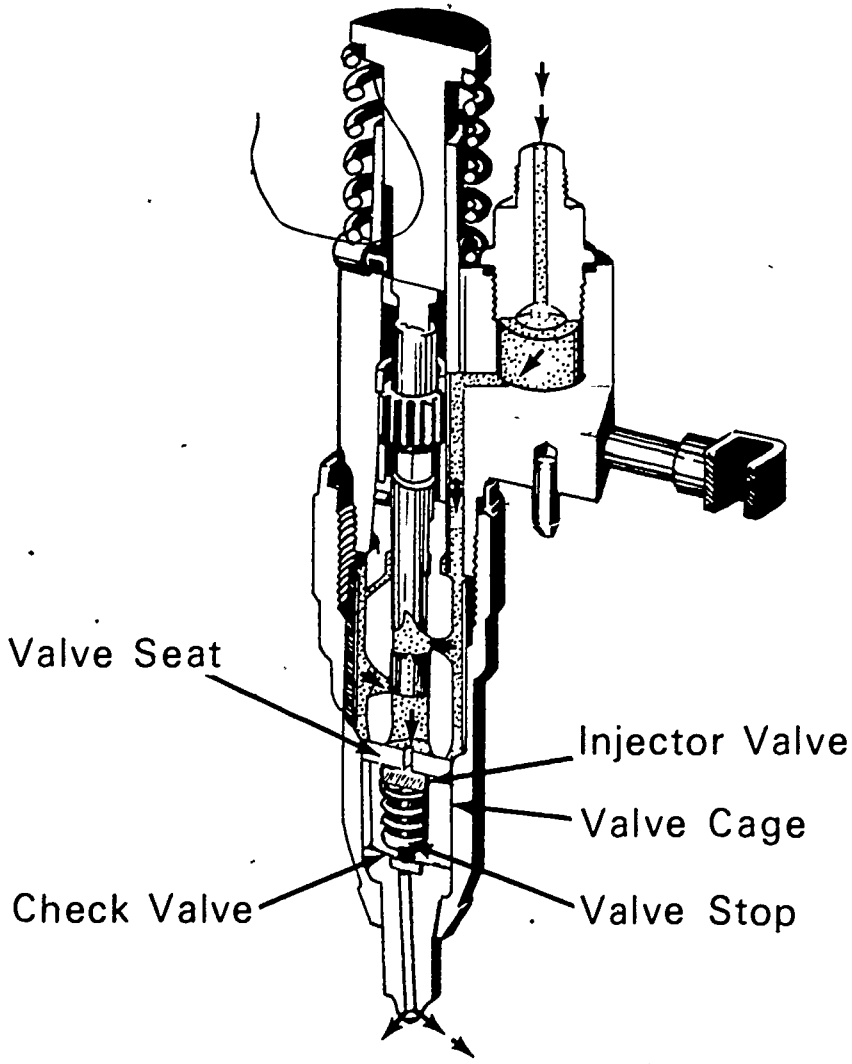

(NOTE: From the bushing up, parts on the crown valve and needle valve are the same. See Transparency 2.)

Plunger Positions

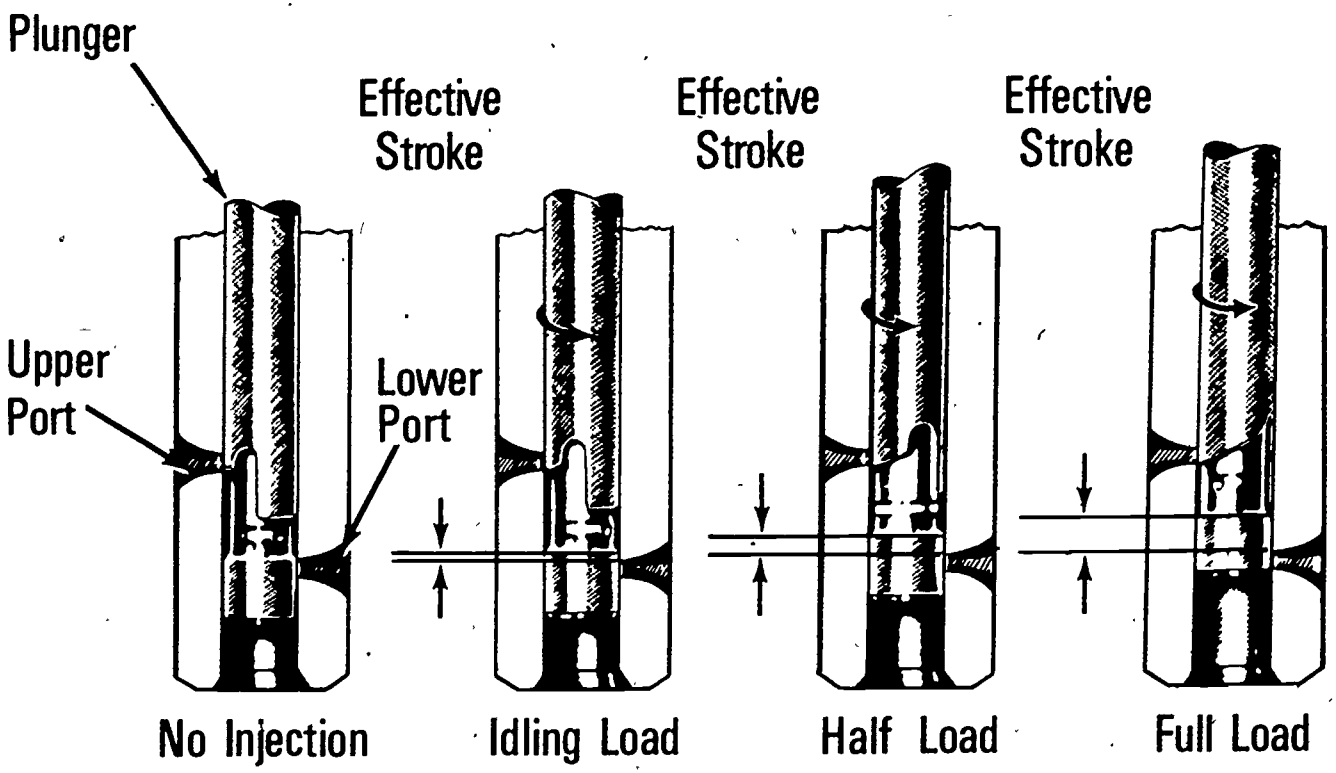

Various plunger positions from no-load to full-load of unit injector.

UNIT INJECTOR
UNIT V

JOB SHEET #1--REMOVE UNIT INJECTOR FROM ENGINE

I. Tools and materials

A. Needle valve fuel injector

B. Appropriate service manual

C. Hand tool set

D. Pry bar

E. Shop towels (lint-free)

F. Safety glasses

II. Procedure

(CAUTION: Follow all shop safety procedures.)

A. Remove the valve rocker cover

B. Remove the fuel pipes from both the injector and the fuel connectors (Figure 1)

FIGURE 1

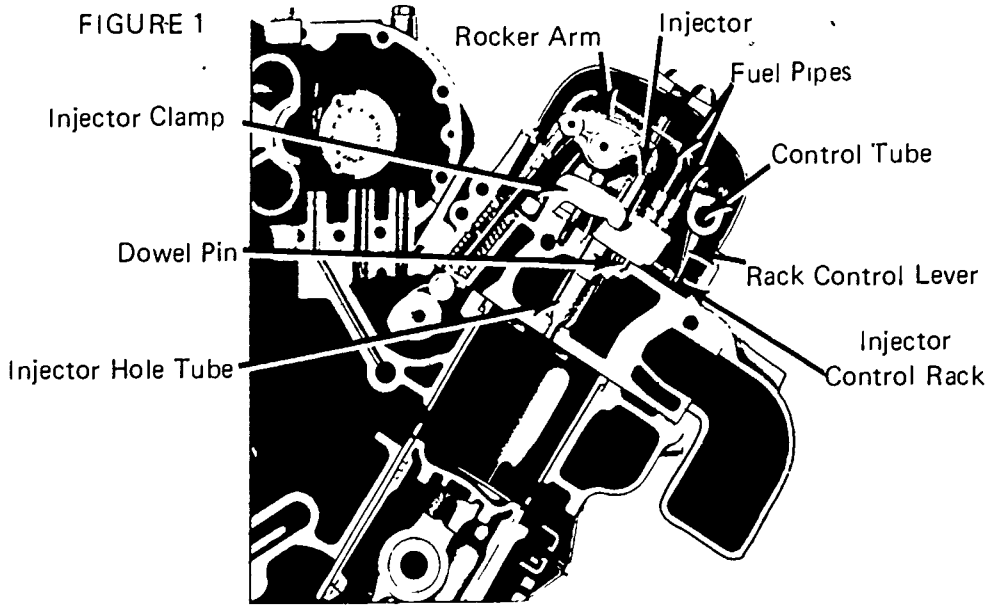

(NOTE: Immediately after removal of the fuel pipes from an injector, cover the filter caps with shipping caps to prevent dirt from entering the injector. Also protect the fuel pipes and fuel connectors from entry of dirt or foreign material.)

JOB SHEET #1

C. Rotate the engine to bring the outer ends of the push rods of the injector and valve rocker arms in line horizontally

D. Remove the two rocker shaft bracket bolts and swing the rocker arms away from the injector and valves (Figure 2)

FIGURE 2

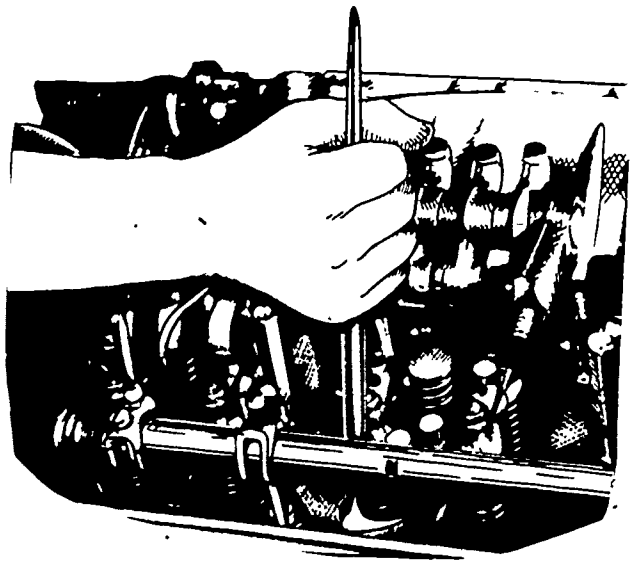

E. Remove the injector clamp bolt, special washer, and clamp.

F. Loosen the inner and outer adjusting screws on the injector rack control lever and slide the lever away from the injector

G. Lift the injector from its seat in the cylinder head (Figure 2)

H. Cover the injector hole in the cylinder head to keep foreign material out

I. Clean the exterior of the injector with clean fuel oil and dry it with compressed air

UNIT INJECTOR
UNIT V

JOB SHEET #2--DISASSEMBLE A UNIT INJECTOR

I. Tools and materials

A. Needle valve fuel injector

B. Appropriate service manual

(NOTE: Normally, in industry, unit injectors are pretested before disassembly.)

C. Injector nut socket wrench

D. Injector spray tip driver

E. Injector vise and rack freeness tester

F. Hand tool set

G. Shop towels (lint-free)

H. Safety glasses

JOB SHEET #2

II. Procedure

(CAUTION: Follow all shop safety procedures.)

A. Support the injector upright in injector vise and rack freeness tester and remove the filter caps, springs, filters, and gaskets (Figure 1)

FIGURE 1

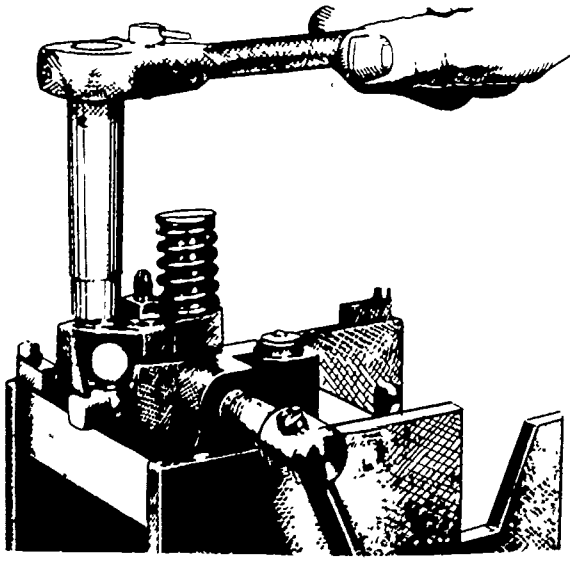

(NOTE: Whenever a fuel injector is disassembled, discard the filters and gaskets and replace with new filters and gaskets.)

(CAUTION: Clean injector before removal and handle with care.)

B. Compress the follower spring and raise the spring above the stop pin with a screwdriver and withdraw the pin and allow the spring to rise gradually (Figure 2)

FIGURE 2

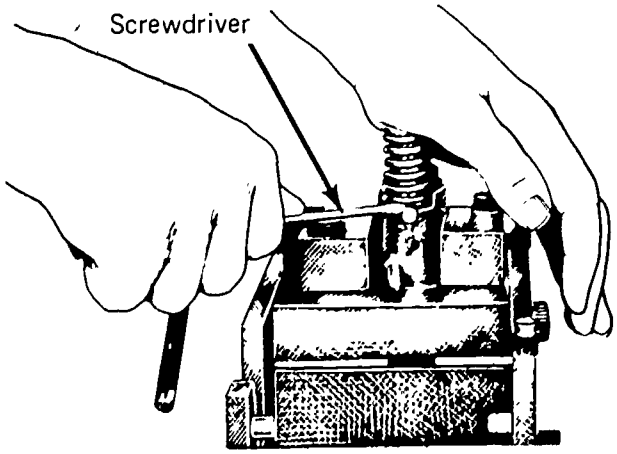

JOB SHEET #2

C. Remove the plunger follower, plunger, and spring as an assembly (Figure 3)

FIGURE 3

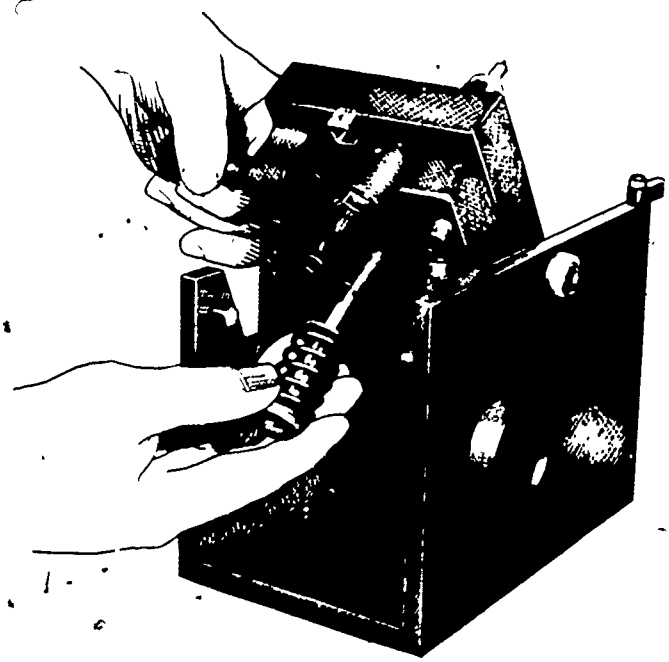

D. Invert the fixture and, using injector nut socket wrench, loosen the nut on the injector body (Figure 4)

FIGURE 4

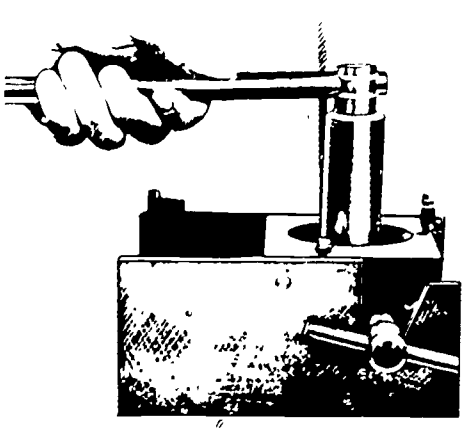

E. Lift the injector nut straight up, being careful not to dislodge the spray tip and valve parts

JOB SHEET #2

F. Remove the spray tip and valve parts from the bushing and place them in a clean receptacle until ready for assembly

(NOTE: When an injector has been in use for some time, the spray tip, even though clean on the outside, may not be pushed readily from the nut with the fingers. In this event, support the nut on a wood block and drive the tip down through the nut, using the injector spray tip driver. See Figure 5.)

FIGURE 5

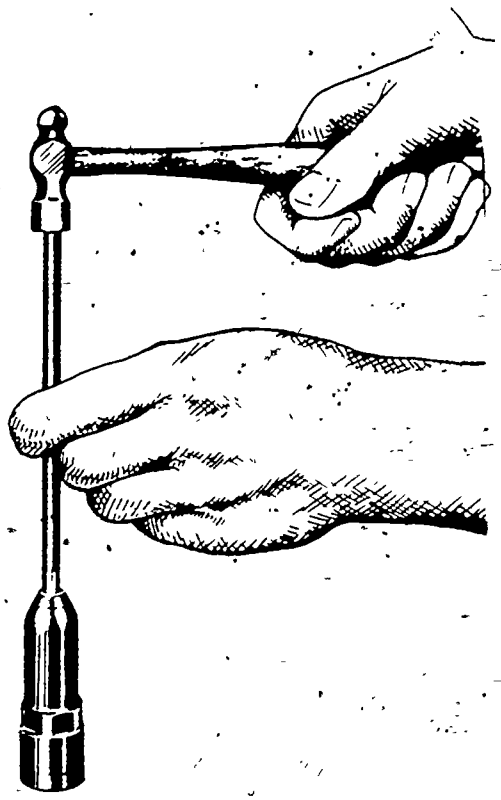

JOB SHEET #2

G. Remove the spill deflector and the seal ring from the injector nut (Figure 6)

FIGURE 6

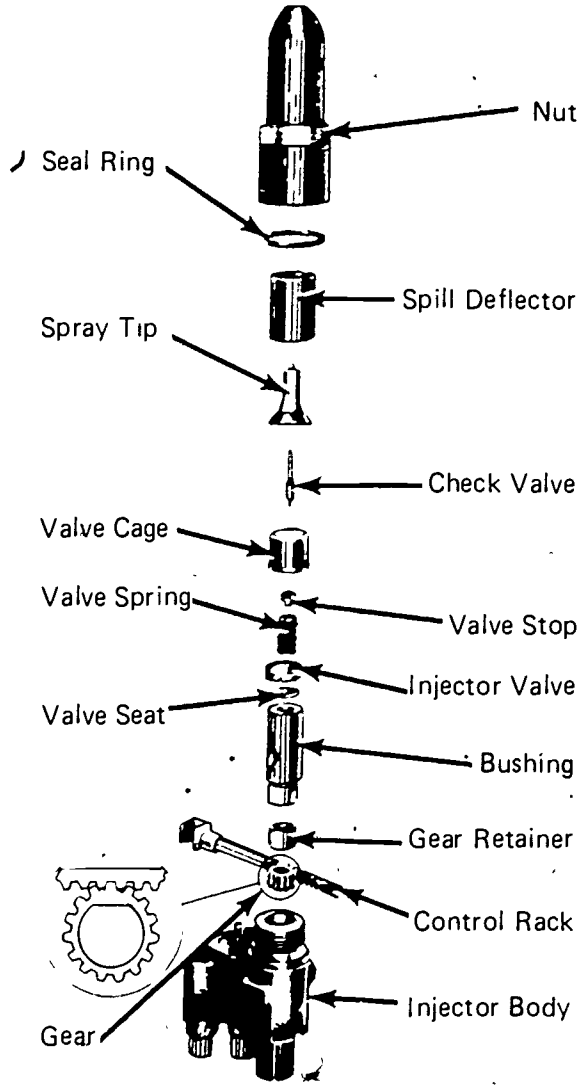

H. Remove the plunger bushing, gear retainer, and gear from the injector body

I. Withdraw the injector control rack from the injector body

UNIT INJECTOR
UNIT V

JOB SHEET #3--ASSEMBLE A UNIT INJECTOR

I. Tools and materials

A. Needle valve fuel injector

B. Appropriate service manual

C. Injector vise and rack freeness tester

D. Injector nut socket wrench

E. Deep well socket, 9/16"

F. Torque wrench

G. Hand tool set

H. Fuel oil or calibrating oil

I. Shop towels (lint-free)

J. Safety glasses

K. Clean bench

JOB SHEET #3

II. Procedure

(CAUTION: Follow all shop safety procedures.)

A. Assemble injector filters

(NOTE: Use an extremely clean bench to work on and to place parts when assembling an injector. Also, be sure all injector parts, both new and used, are clean. Flush parts in fuel oil or calibrating oil during assembly.)

1. Study relative position of injector parts (Figures 1 and 2)

FIGURE 1

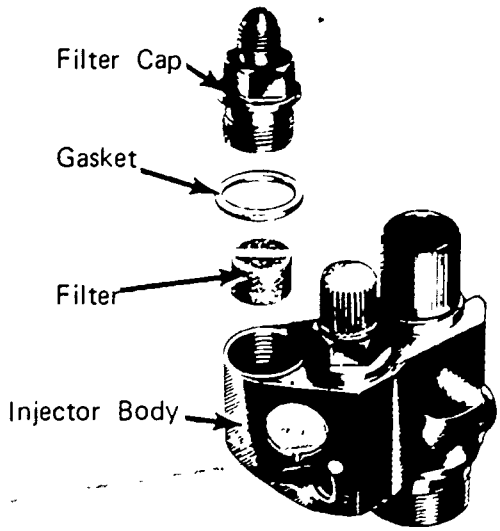

JOB SHEET #3

FIGURE 2

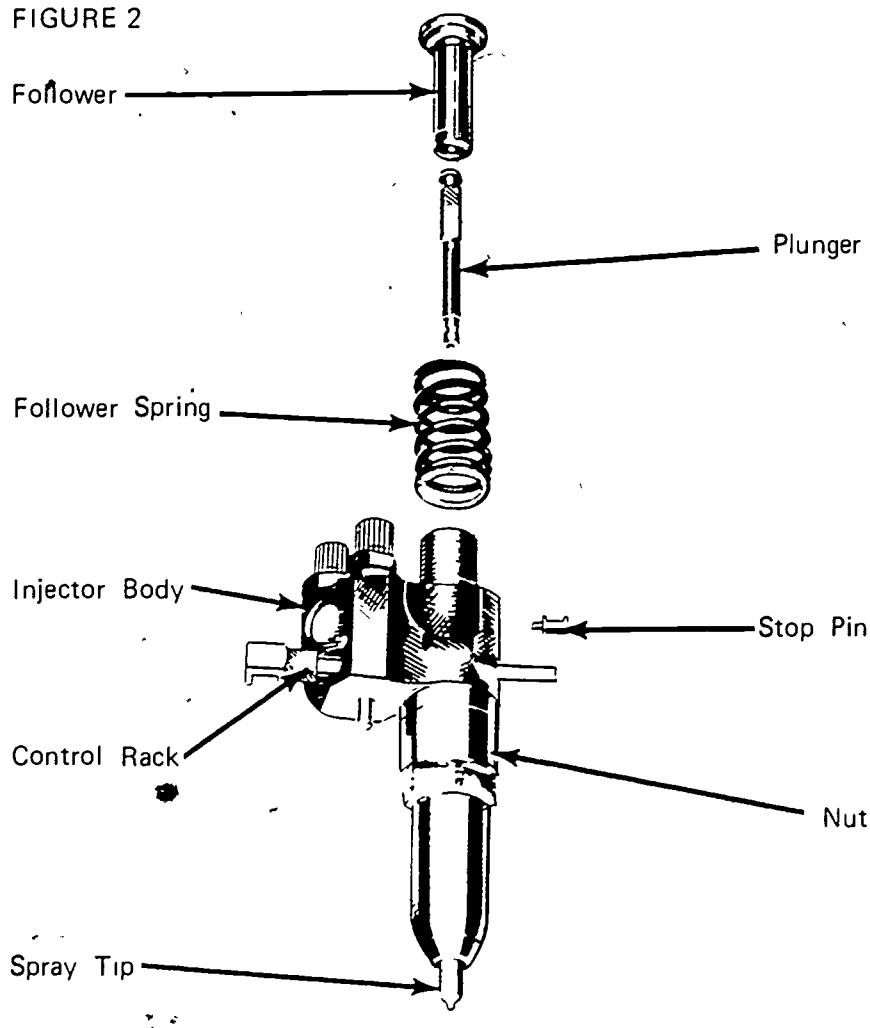

2. Hold the injector body right side up and place a new filter (slot in the filter up or toward the filter cap) in each of the fuel cavities in the top of the injector body (Figure 1)

3. Place a spring on top of each filter (if an early design filter cap is used) and a new gasket on each filter cap

4. Lubricate the threads and install the filter caps

5. Use a 9/16" deep socket wrench and tighten the filter caps to specified torque

6. Purge the filters after installation by directing compressed air or fuel through the filter caps

7. Install clean shipping caps on the filter caps to prevent dirt from entering the injector

JOB SHEET #3

B. Assemble rack and gear

(NOTE: Observe the drill spot marks (timing marks) on the control rack and gear. See Figure 3.)

FIGURE 3

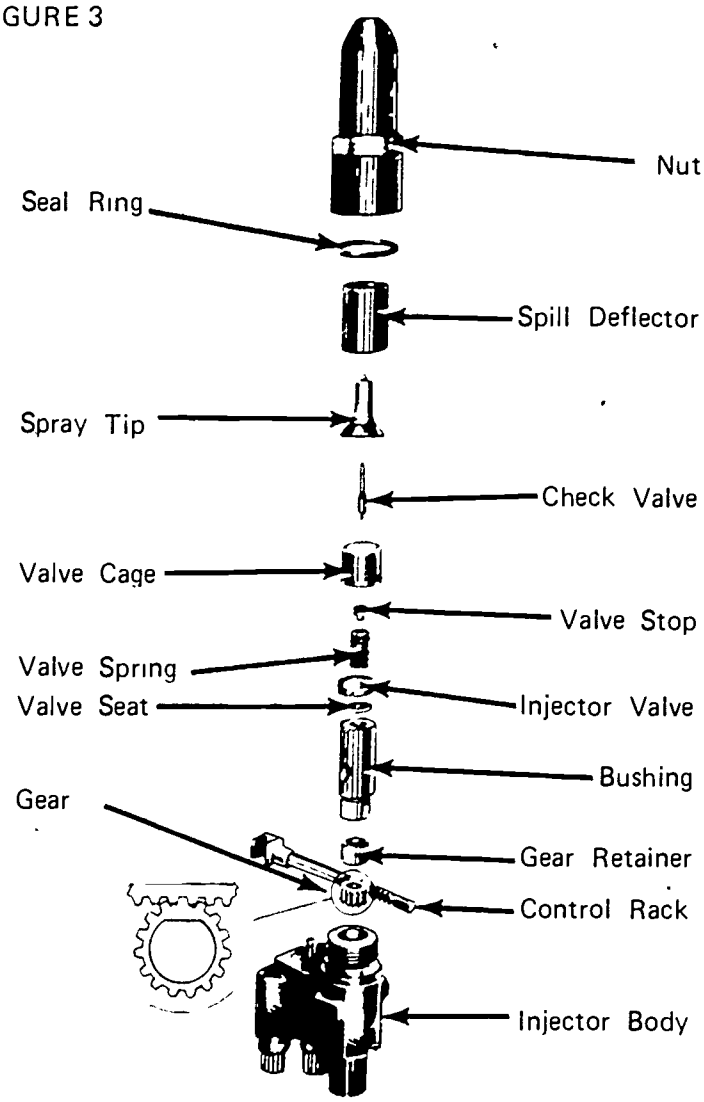

1. Hold the injector body, bottom end up, and slide the rack through the hole in the body

2. Look into the bore for the rack teeth, then move the rack until you can see the drill marks and hold the rack in this position

3. Place the gear in the injector body so that the marked tooth is engaged between the two marked teeth on the rack

JOB SHEET #3

4. Place the gear retainer on top of the gear

5. Align the locating pin in the bu with the slot in the injector body, then slide the end of the bush. into place

C. Assemble injector valve and related parts

(NOTE: Make sure the injector valve and related parts have been lapped and cleaned. See Figure 3.)

1. Support the injector body, bottom end up, in the injector vise and freeness tester

2. Place a new seal ring on the shoulder of the body, then slide the spill deflector over the barrel of the bushing

3. Place the valve seat on the end of the bushing and insert the stem of the valve in one end of the valve spring and the valve stop in the other end

4. Lower the valve cage over this assembly so that the valve stop seats in the cage and place the valve cage assembly on the valve seat

5. Locate the check valve centrally on the cage and place the spray tip over the check valve and against the valve cage

6. Lubricate the threads in the injector nut and carefully thread the nut on the injector body by hand

(NOTE: Rotate the spray tip between your thumb and first finger while threading the nut on the injector body. See Figure 4.)

FIGURE 4

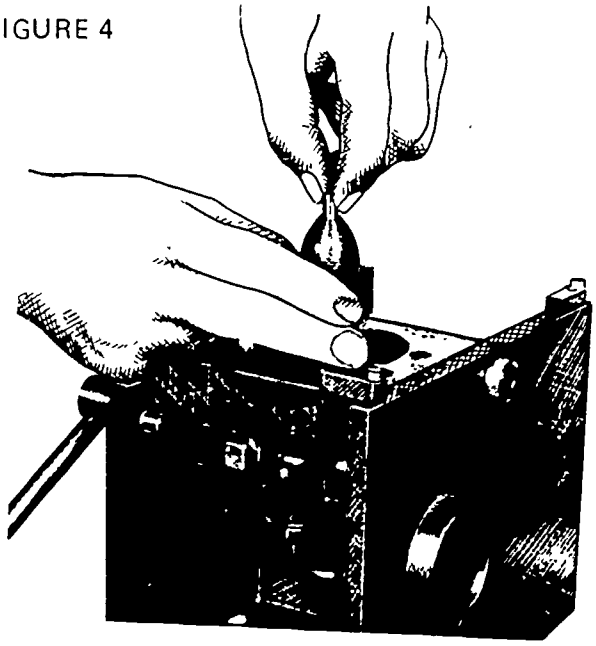

JOB SHEET #3

7. Tighten the nut as tight as possible by hand

   (NOTE: At this point there should be sufficient force on the spray tip to make it impossible to turn with your fingers.)

8. Use injector nut socket wrench and torque wrench to tighten the injector nut to specified torque (Figure 5)

   (NOTE: Do not exceed the specified torque; otherwise, the nut may be stretched and result in improper sealing of the lapped surfaces in a subsequent injector overhaul. Avoid cross threading the nut during installation.)

FIGURE 5

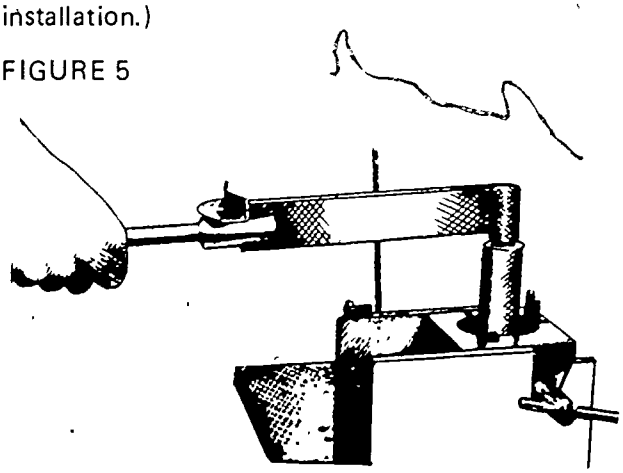

D. Assemble plunger and follower

1. Slide the head of the plunger into the follower (Figure 2)

2. Invert the injector in the assembly fixture (filter cap end up) and push the rack all the way in; then place the follower spring on the injector body

3. Place the stop pin on the injector body so that the follower spring rests on the narrow flange of the stop pin

4. Align the slot in the follower with the stop pin hole in the injector body

5. Align the flat side of the plunger with the slot in the follower

6. Insert the free end of the plunger into the injector body

JOB SHEET #3

7. Press down on the follower and at the same time press the stop pin into position (Figure 6)

(NOTE: When in place, the spring will hold the stop pin in position.)

FIGURE 6

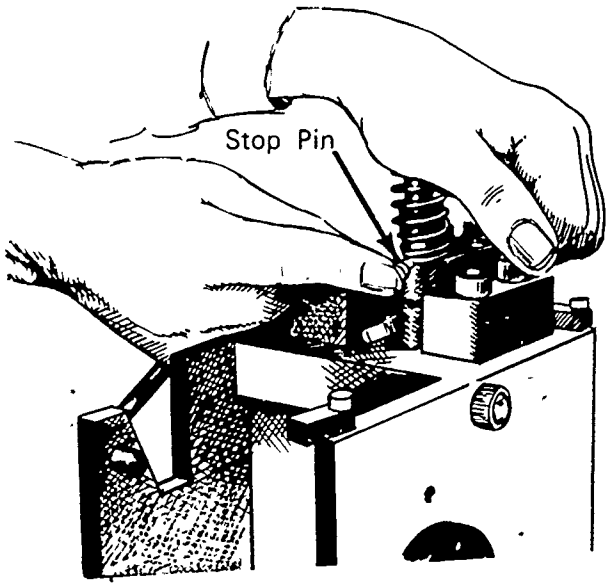

UNIT INJECTOR
UNIT V

JOB SHEET #4--TEST A UNIT INJECTOR

I. Tools and materials

A. Needle valve fuel injector

B. Appropriate service manual

C. Hand tool set

D. Injector vise and rack freeness tester

E. Injector tester

F. Comparator injector tester or appropriate calibrator injector tester

G. Shop towels (lint-free)

H. Safety glasses

II. Procedure

(CAUTION: Follow all shop safety procedures.)

(NOTE: Identify each injector and record the pressure drop and fuel output as indicated by the following tests.)

A. Test injector control rack and plunger movement

1. Place the injector in the injector vise and rack freeness tester

JOB SHEET #4

2. Place the handle on top of the injector follower (Figure 1)

FIGURE 1

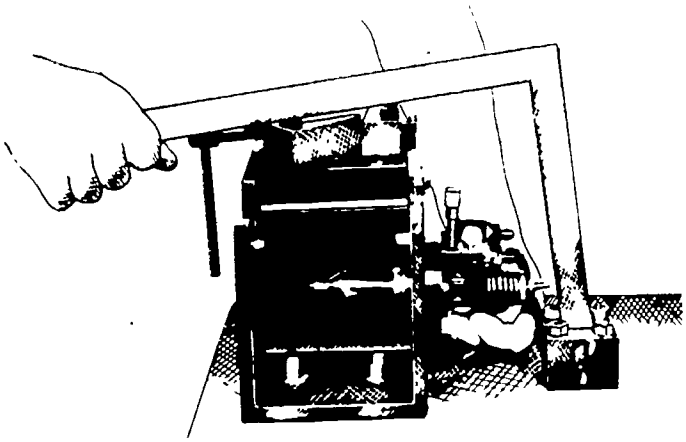

(NOTE: If necessary, adjust the contact screw in the handle to insure the contact screw is at the center of the follower when the follower spring is compressed.)

3. Hold the injector control rack in the no-fuel position and push the handle down and depress the follower to the bottom of its stroke

4. Release the pressure on the handle very slowly while moving the control rack up and down until the follower reaches the top of its travel (Figure 1)

(NOTE: If the rack does not fall freely, loosen the injector nut, turn the tip, then retighten the nut. Loosen and retighten the nut a couple of times if necessary. Generally this will free the rack. Then, if the rack isn't free, change the injector nut. In some cases it may be necessary to disassemble the injector to eliminate the cause of the misaligned parts.)

B. Test injector valve opening pressure

(NOTE: The purpose of the valve opening pressure test is to determine the pressure at which the valve opens and injection begins.)

1. Place the injector in the tester with the dowel on the underside of the injector located in the proper slot of the adaptor plate

JOB SHEET #4

2. Position the injector handle support to the proper height (Figure 2)

(NOTE: When testing an injector just removed from an engine, the flow of fuel through the injector on the tester should be the same as in the engine. Connections on the test head of the tester may be changed to obtain the correct direction of flow.)

(CAUTION: Always place the injector in the proper position in relation to the spray deflector before it is tested to prevent the fuel spray from penetrating the skin. Fuel oil which enters the blood stream can cause a serious infection.)

FIGURE 2

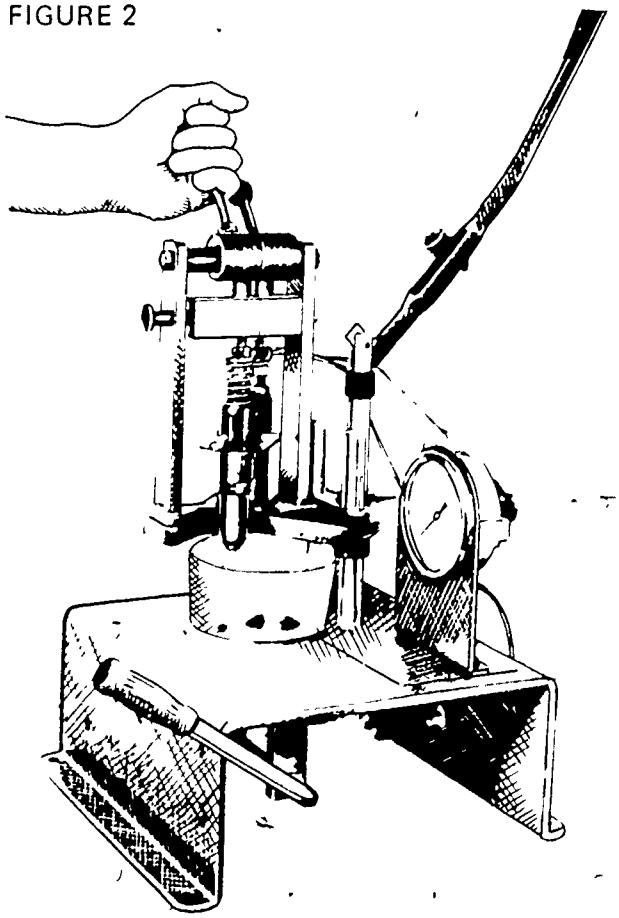

3. Close the inlet clamp and operate the pump handle until all of the air is purged from the injector tester and the injector, then, close the outlet clamp

JOB SHEET #4

4. With the injector rack in the full-fuel position, pump the handle of the injector tester with smooth, even strokes and record the injector valve opening pressure indicated when the injector sprays fuel (Figure 3)

FIGURE 3

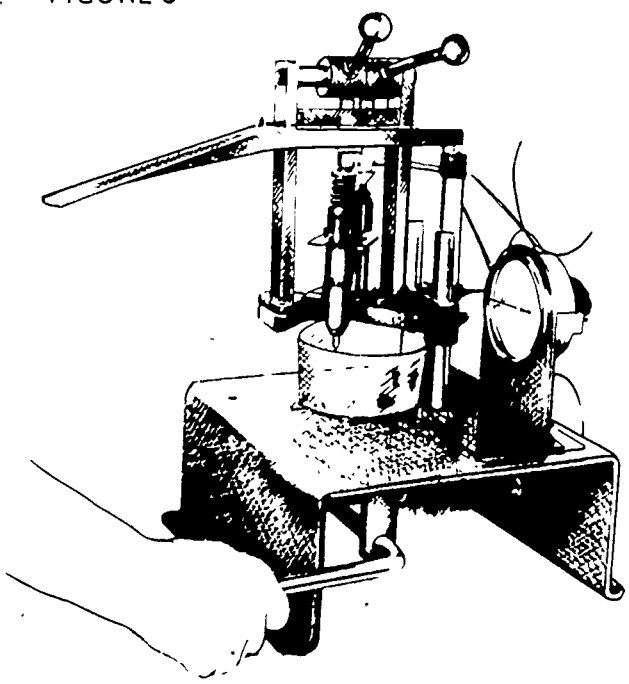

(NOTE: The specified valve opening pressure is 450 to 850 psi. If the pressure is not within the above range, refer to manufacturer's troubleshooting chart.)

C. Perform injector valve holding pressure test

(NOTE: The injector valve holding pressure test will determine whether the various lapped surfaces in the injector are sealing properly.)

1. Operate the pump handle to bring the pressure up to a point just below the injector valve opening pressure (approximately 450 psi)

2. Close the fuel shut off valve and note the pressure drop

(NOTE: The time for a pressure drop from 450 psi to 250 psi should not be less than 40 seconds. If the pressure drop is less than 40 seconds, follow procedures a through c.)

JOB SHEET #4

a. Dry the injector thoroughly with compressed air

b. Open the tester fuel valve and operate the pump handle to maintain the test pressure

c. Correct malfunctions as appropriate

1) A leak around the spray tip or seal ring usually is caused by a loose injector nut, a damaged seal ring, or hardened surface on the injector nut or spray tip

2) A leak at the filter cap indicates a loose filter cap or damaged filter cap gasket

3) A "dribble" at the spray tip orifices indicates a leaking valve assembly due to a damaged surface or dirt; leakage at the tip will cause pre-ignition in the engine

(NOTE: A drop or two of fuel at the spray tip is only an indication of the fuel trapped in the spray tip at the beginning of the test and is not detrimental as long as the pressure drop specified is not less than 40 seconds.)

D. Perform injector high pressure test

(NOTE: This test is performed to discover any fuel leaks at the injector filter cap gaskets, body plugs and nut seal ring which did not appear during the valve holding pressure test. The high pressure test also indicates whether or not the plunger and bushing clearance is satisfactory.)

1. Thoroughly dry the injector with compressed air

2. Check the fuel connections for leaks; if leaks have occurred, tighten the connections, dry the injector, and recheck

JOB SHEET #4

3. With the injector rack in the full-fuel position and the injector tester handle locked in position by means of the handle lock, operate the pump handle to build up and maintain the pressure (Figure 4)

FIGURE 4

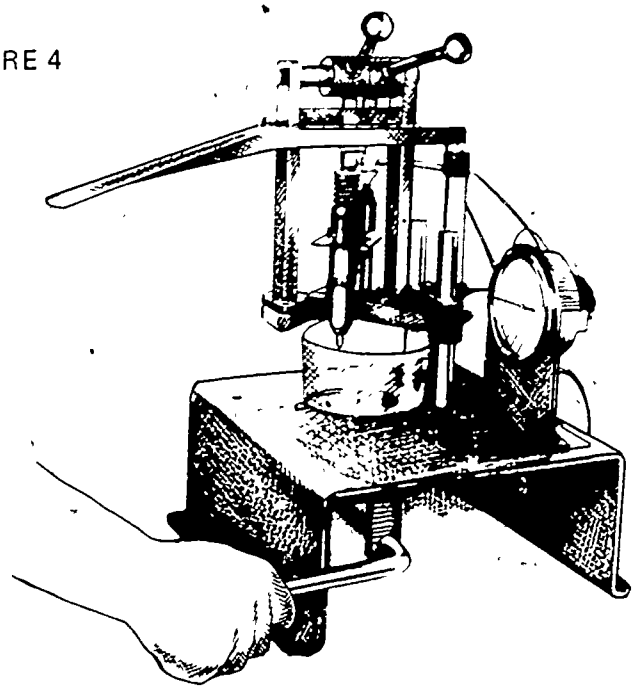

4. Use the adjusting screw in the injector tester handle to depress the injector plunger just far enough to close both ports in the injector bushing

   (NOTE: The point at which both ports are closed may be easily ascertained by the fact that the injector spray will decrease appreciably and a rise in pressure will occur. At this time, the condition of the plunger and bushing may be established If there is excessive clearance between the plunger and bushing, pressure beyond the normal valve opening pressure cannot be obtained. Replacement of the plunger and bushing assembly is then required.)

5. Pump up the injector tester and maintain a pressure of 1600 to 2000 psi by actuating the pump handle, then inspect for leaks at the injector filter cap gaskets, body plugs, and injector nut seal ring

   (NOTE: If any of these conditions exist, refer to manufacturer's troubleshooting chart. It is normal for fuel to seep out around the rack due to high pressure fuel being applied to a normally low pressure area in the injector assembly. However, fuel droplets at the rack indicate excessive leakage.)

   (CAUTION. Do not permit the pressure in the injector tester to equal or exceed the capacity of the pressure gauge.)

JOB SHEET #4

E. Test spray pattern

1. Open the fuel shut-off valve, place the injector rack in the full-fuel position, and operate the injector several times in succession by operating the tester handle at approximately 40 strokes per minute

2. Observe the spray pattern to see that all spray orifices are open and injecting evenly

   (NOTE: The beginning and ending of injection should be sharp and the fuel injected should be finely atomized. See Figure 4.)

3. If all of the spray tip orifices are not open and injecting evenly, clean the orifices in the spray tip

   (CAUTION: To prevent damage to the pressure gauge, do not exceed 100 psi during this test.)

F. Test fuel output

(NOTE: The injector fuel output test can be performed in either the comparator J 7041 or the calibrator J 22410. See Figures 5 and 6.)

(CAUTION: When injectors are removed from an engine for fuel output testing and, if satisfactory, reinstalled without disassembly, extreme care should be taken to avoid reversing the fuel flow. When the fuel flow is reversed, dirt trapped by the filter is back-flushed into the injector components.)

JOB SHEET #4

(NOTE Before removing an injector from the engine, observe the direction of the fuel flow. To avoid reversing the fuel flow when checking injector fuel output, use the appropriate adaptor The position of the fuel flow pipes on the comparator depends on the adaptor being used and the direction of fuel flow through the injector See Figure 5 The position of the braided fuel inlet tube and the plastic fuel outlet tube on the calibrator depends on the adaptor being used and the direction of fuel flow through the injector See Figure 6.)

FIGURE 5

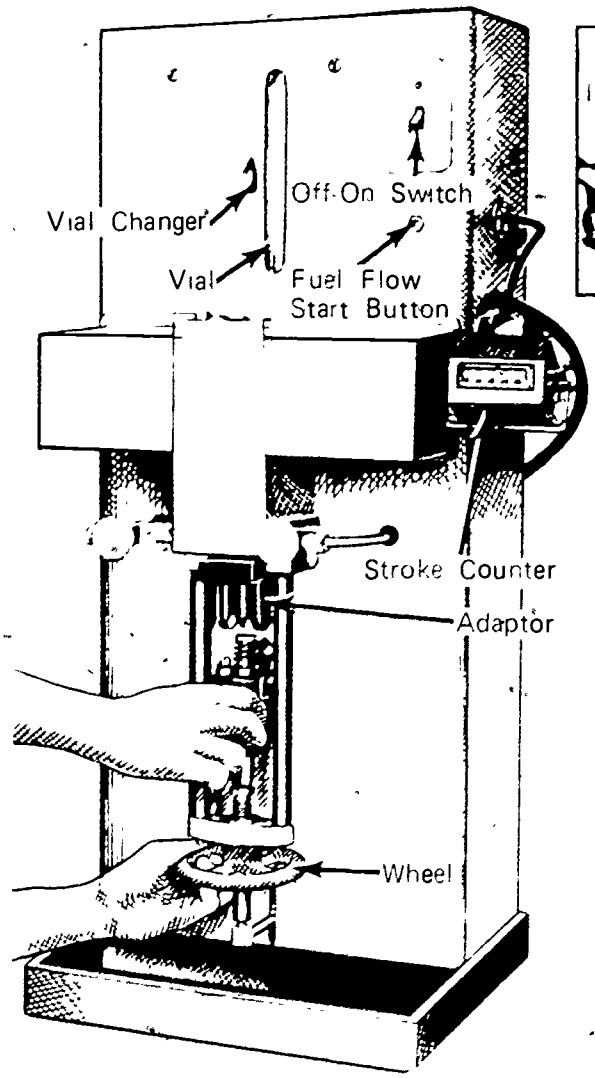

FIGURE 6

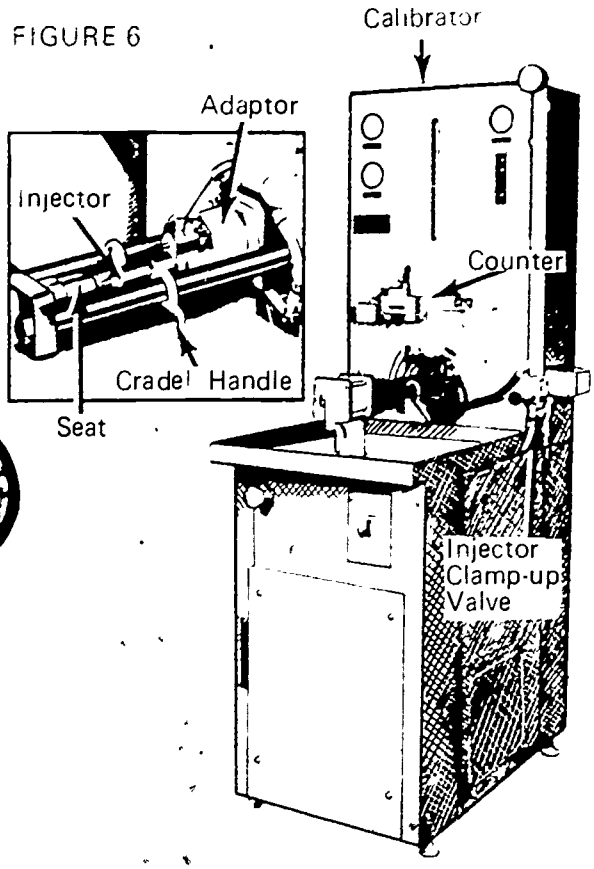

JOB SHEET #4

1. Check fuel output using appropriate comparator (Figure 5)

   a. Place the injector in the comparator and tighten the hand wheel to clamp the injector and adaptor in position

   (NOTE: Make sure the counter on the comparator is preset to 1000 strokes. If, for any reason, this setting has been altered, raise the cover and reset the counter to 1000 strokes by pulling the selector wheel to be changed to the right and rotating it to its proper setting. Then release the wheel and close the cover. Refer to the comparator instruction booklet for further information. See Figure 7.)

   FIGURE 7

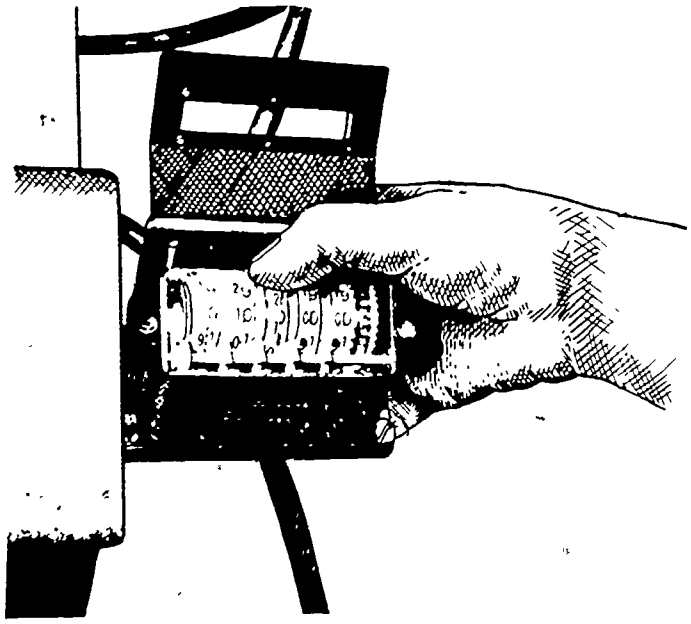

   (NOTE: When installing a low clamp body injector in the comparator, position the injector in the adaptor at approximately a 45° angle, rather than straight into the adaptor, then bring it into a vertical position and secure it in place.)

   b. Pull the injector rack out to the no-fuel position

   c. Start the comparator by turning on the switch

   d. After the comparator has started, push the injector rack in the full-fuel position

   e. Let the injector run for approximately 30 seconds to purge the air that may be in the system

JOB SHEET #4

f. After 30 seconds, press the fuel flow start button

(NOTE: This will start the flow of fuel into the vial. The comparator will automatically stop the flow of fuel after 1000 strokes.)

g. After the fuel stops flowing into the vial, pull the injector rack out to the no-fuel position

h. Turn the comparator off and reset the counter

i. Observe the reading on the vial and refer to Figure 8 to determine if the injector fuel output falls within its specified limits

(NOTE: If the quantity of fuel in the vial does not fall within the specified limits, refer to manufacturer's troubleshooting chart for cause and remedy.)

FIGURE 8

Injector	Calibrator J 22410		Comparator J 7041	
	Min	Max	Min	Max
5S8	50	54	9	15
6S8	53	57	10	16
S55	55	59	14	20
S60	59	63	18	24
S65	64	68	24	30
S70	71	75	30	36
S80	80	84	38	44
S90	87	92	46	52

2. Check fuel output using appropriate calibrator (Figure 6)

a. Place the cam shift index wheel and fuel flow lever in their respective positions

b. Turn on the test fuel oil heater switch and preheat the test oil to 95° to 105°F

c. Place the proper injector adaptor between the tie rods and engage it with the fuel block locating pin

d. Slide the adaptor forward and up against the fuel block face

e. Place the injector seat into the permanent seat (cradle handle in vertical position)

JOB SHEET #4

f. Clamp the injector into position by operating the air valve

(NOTE: Make sure the counter on the calibrator is preset at 1000 strokes. See Figure 9. If for any reason this setting has been altered, reset the counter to 1000 strokes by twisting the cover release button to the left and hold the reset lever in the full up position while setting the numbered wheels. Close the cover. Refer to the calibrator instruction booklet for further information.)

FIGURE 9

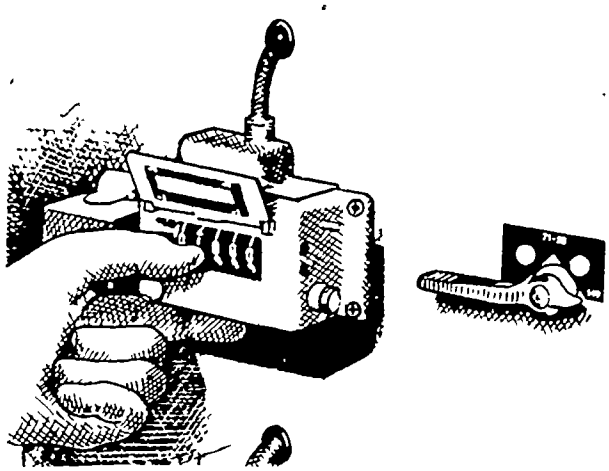

g. Pull the injector rack out to the no-fuel position

h. Turn on the main power control circuit switch

i. Start the calibrator by turning on the motor starter switch

(NOTE: The low oil pressure warning buzzer will sound briefly until the lubricating oil reaches the proper pressure.)

j. After the calibrator has started, set the injector rack into the full-fuel position

(NOTE: Allow the injector to operate for approximately 30 seconds to purge the air that may be in the system.)

k. After the air is purged, press the fuel flow start button (red)

(NOTE: This will start the flow of fuel into the vial. The fuel flow to the vial will automatically stop after 1000 strokes.)

l. Shut the calibrator off (the calibrator will stop in less time at full-fuel)

JOB SHEET #4

m. Observe the vial reading and refer to Figure 8 to determine whether the injector fuel output falls within the specified limits

(NOTE: If the quantity of fuel in the vial does not fall within the specified limits, refer to manufacturer's troubleshooting chart for the cause and remedy.)

(NOTE: The comparator or the calibrator may be used to check and select a set of injectors which will inject the same amount of fuel in each cylinder at a given throttle setting, thus resulting in a smooth running, well balanced engine An injector which passes all of the above tests may be put back into service. However, an injector which fails to pass one or more of the tests must be rebuilt and checked on the comparator or the calibrator Any injector which is disassembled and rebuilt must be tested again before being placed in service.)

UNIT INJECTOR
UNIT V

JOB SHEET #5--INSTALL A UNIT INJECTOR

I. Tools and materials

A. Needle valve fuel injector

B. Appropriate service manual

C. Hand tool set

D. Injector tube bevel reamer

E. Fuel pipe socket

F. Torque wrench

G. Grease

H. Shop towels (lint-free)

I. Safety glasses

JOB SHEET #5

II. Procedure

(CAUTION· Follow all shop safety procedures.)

(NOTE: Before installing an injector in an engine, remove the carbon deposits from the beveled seat of the injector tube in the cylinder head. This will assure correct alignment of the injector and prevent any undue stress from being exerted against the spray tip.)

A. Use injector tube·bevel reamer to clean the carbon from the injector tube (Figure 1)

FIGURE 1

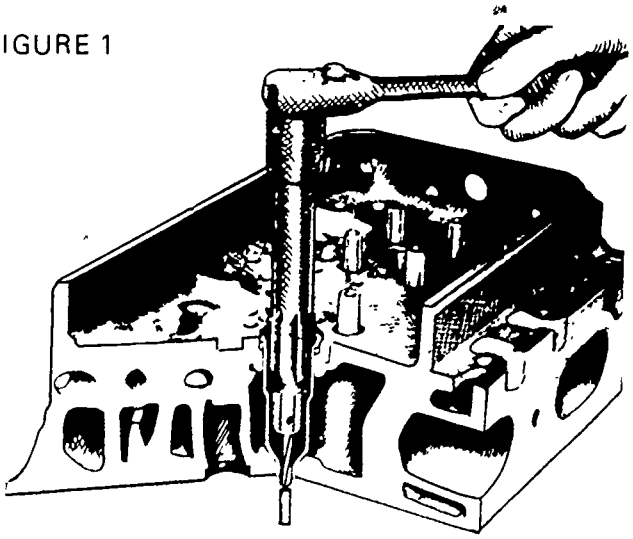

(CAUTION: Exercise care to remove ONLY the carbon so that the proper clearance between the injector body and the cylinder head is maintained. Pack the flutes of the reamer with grease to retain the carbon removed from the tube.)

(NOTE: Be sure the fuel injector is filled with fuel oil. If necessary, add clean fuel oil at the inlet filter cap until it runs out of the outlet filter cap.)

JOB SHEET #5

B. Insert the injector into the injector tube with the dowel in the injector body registering with the locating hole in the cylinder head (Figure 2)

FIGURE 2

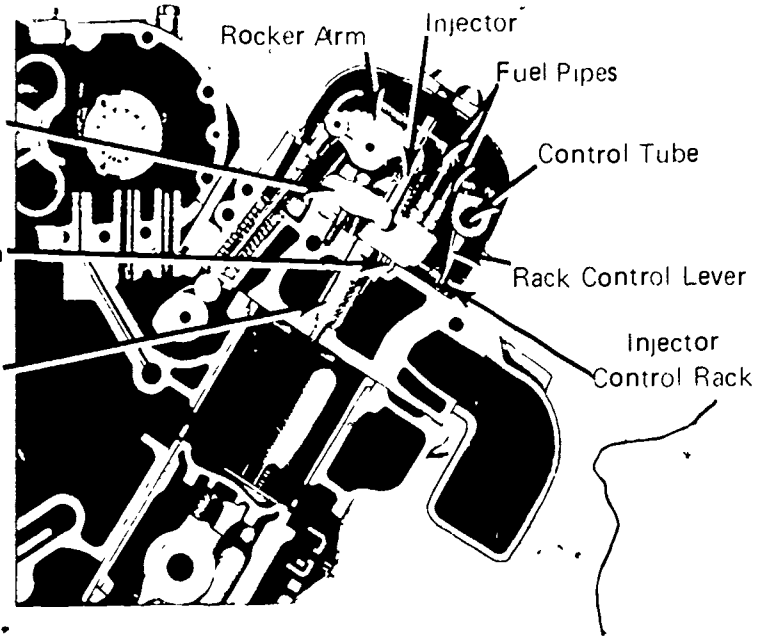

C. Slide the rack control lever over so that it registers with the injector rack

D. Install the injector clamp, special washer (with curved side toward injector clamp) and bolt and tighten the bolt to specified torque, making sure that the clamp does not interfere with the injector follower spring or the exhaust valve springs

(NOTE: Check the injector control rack for free movement. Excess torque can cause the control rack to stick or bind.)

E. Move the rocker arm assembly into position and secure the rocker arm brackets to the cylinder head by tightening the bolts to the torque specified in service manual

(CAUTION: On four valve cylinder heads, there is a possibility of damaging the exhaust valves if the exhaust valve bridges are not resting on the ends of the exhaust valves when tightening the rocker shaft bracket bolts. Therefore, note the position of the exhaust valve bridges before, during, and after tightening the rocker shaft bolts.)

JOB SHEET #5

F. Remove the shipping caps; then, install the fuel pipes and connect them to the injector and the fuel connectors, using fuel pipe socket to tighten the connections to specified torque

(NOTE: A specified fuel pipe socket may be needed; refer to appropriate service manual.)

(CAUTION: Do not bend the fuel pipes and do not exceed the specified torque. Excessive tightening will twist or fracture the flared end of the fuel line and result in leaks. Lubricating oil diluted by fuel oil can cause serious damage to the engine bearings.)

G. Refer to service manual for final adjustments and tune-up procedures

UNIT INJECTOR
UNIT V

NAME _____

TEST

1. Match the terms on the right with their correct definitions.

_____a. Serves as a nozzle to atomize fuel sprayed into combustion chamber	1. Bushing
_____b. Spiraled recess machined into plunger	2. Control rack and gear
_____c. Drilled passage in bushing	3. Spray valve
_____d. Rack and pinion gear arrangement on unit injector	4. Unit injector
_____e. Serves as a barrel for the plunger on unit injector	5. Helix
_____f. Injection pump, injector, and spray valve form a single unit	6. Port
	7. Valve cage

2. Match the parts of a unit injector on the right with their correct part names.

_____a. Follower

_____b. Plunger

_____c. Gear

_____d. Valve spring

_____e. Filter

_____f. Spray tip

_____g. Control rack

_____h. Needle valve

_____i. Injector body

_____j. Follower spring

_____k. Identification tag

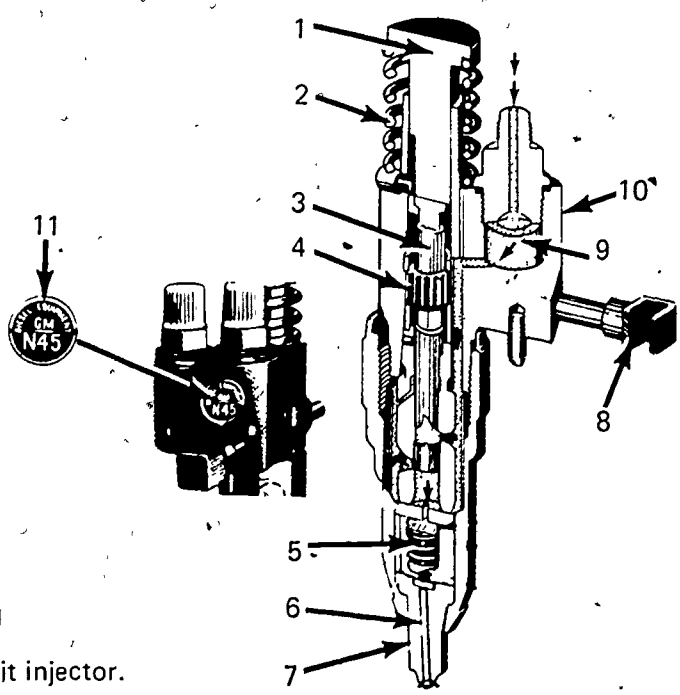

3. List three functions of a unit injector.

a. _____

b. _____

c. _____

4. Arrange in order the steps in fuel flow through the unit injector fuel system by placing the correct sequence number in the appropriate blank.

   _____a. Passes through drilled passages and ports into supply chamber

   _____b. Atomized into combustion chamber

   _____c. Pump pressure forces fuel through small orifices in spray tip

   _____d. Enters injector through a filter cap and filter

5. Distinguish between a crown valve and needle valve by placing an "X" next to the description of a crown valve.

   _____a. 1) Stacked onto the bushings as follows: check valve, valve cage, and valve seat

   2) Inside valve cage are the valve stop, spring, and injector valve

   _____b. 1) Stacked onto the bushing as follows: check valve, valve cage, spring, spring seat, spring cage, and spray tip

   2) Inside spray tip is the needle valve

   3) Inside spring cage is the spring seat and the valve spring

6. Distinguish between no injection and full injection by placing an "X" next to the descriptions of no injection.

   _____a. Control rack out

   _____b. Control rack in

   _____c. Upper port is not closed by helix

   _____d. Upper port is closed and lower port is closed by helix.

7. Demonstrate the ability to:

   a. Remove unit injector from engine.

   b. Disassemble a unit injector.

   c. Assemble a unit injector.

   d. Test a unit injector.

   e. Install a unit injector.

   (NOTE. If these activities have not been accomplished prior to the test, ask your instructor when they should be completed.)

UNIT INJECTOR
UNIT V

ANSWERS TO TEST

1. a. 3
   b. 5
   c. 6
   d. 2
   e. 1
   f. 4

2. a. 1
   b. 3
   c. 4
   d. 5
   e. 9
   f. 7
   g. 8
   h. 6
   i. 10
   j. 2
   k. 11

3. Any three of the following:

   a. Creates a high fuel pressure
   b. Meters required amount of fuel
   c. Atomizes the fuel
   d. Times injection
   e. Injects fuel

4. a. 2
   b. 4
   c. 3
   d. 1

5. a

6. a,c

7. Performance skills evaluated to the satisfaction of the instructor

PT FUEL SYSTEMS
UNIT VI

UNIT OBJECTIVE

After completion of this unit, the student should be able to name the main parts of a pressure time (PT) fuel injection system and discuss its operation. The student should also be able to install a PT type pump, and remove and install PT injectors. This knowledge will be evidenced by correctly performing the procedures outlined in the job sheets and by scoring 85 percent on the unit test.

SPECIFIC OBJECTIVES

After completion of this unit, the student should be able to:

1. Match terms related to PT fuel systems with their correct definitions.
2. Name the three main parts of a PT fuel system.
3. Match the main units of a PT pump assembly with their functions.
4. Select true statements concerning the operation of a PT injection system.
5. State the function of a pulsation damper.
6. Complete a list of statements concerning the operation of a mechanical governor.
7. Name two types of PT injectors.
8. Match the operational steps of PT injectors with their descriptions.
9. Demonstrate the ability to:
   a. Remove and install flange type PT injectors.
   b. Remove and install PT (type B, C, and D) injectors.
   c. Adjust an injector plunger and valves using the torque method.
   d. Install a PT-R fuel pump and adjust high and low engine idle.
   e. Test and adjust a PT-G fuel pump.
   f. Adjust an injector using the dial indicator method.

PT FUEL SYSTEMS
UNIT VI

SUGGESTED ACTIVITIES

I. Provide student with objective sheet.

II. Provide student with information and job sheets.

III. Make transparencies.

IV. Discuss unit and specific objectives.

V. Discuss information sheet.

VI. Demonstrate and discuss the procedures outlined in the job sheets.

VII. Supply the appropriate service manual for the injector you have in your shop.

VIII. Obtain at least 3 types of PT pumps (PT-R, PT-G, AFC) for use in classroom demonstrations.

IX. Show film on PT fuel systems.

X. Give test.

INSTRUCTIONAL MATERIALS

I. Included in this unit:

A. Objective sheet

B. Information sheet

C. Transparency masters

1. TM 1--Main Parts of PT Fuel System
2. TM 2--PT Pump Assembly
3. TM 3--PT Pump Assembly (Continued)
4. TM 4--Types of Injectors
5. TM 5--Operation of Injectors
6. TM 6--AFC in the "Full Air" Position
7. TM 7--AFC in the "No Air" Position

D. Job sheets

1. Job Sheet #1--Remove and Install Flange Type PT Injectors

2. Job Sheet #2--Remove and Install PT (Type B, C, and D) Injectors

3. Job Sheet #3--Adjust an Injector Plunger and Valves Using the Torque Method

4. Job Sheet #4--Install a PT-R Fuel Pump and Adjust High and Low Engine Idle

5. Job Sheet #5--Test and Adjust a PT-G Fuel Pump

6. Job Sheet #6--Adjust an Injector Using the Dial Indicator Method

E. Test

F. Answers to test

II. References:

A. Toboldt, William K. *Diesel Fundamentals, Service, Repair.* South Holland, IL: Goodheart-Willcox Company, Inc., 1980.

B. Kates, Edgar J., and Luck, William E. *Diesel and High Compression Gas Engines.* Third edition. Chicago: American Technical Society, 1974.

C. *Service Bulletin No. 3379011-01: Injector Plunger and Valve Adjustments.* Columbus, IN: Cummins Engine Co., December, 1975.

D. *Service Bulletin No. 3379101-00: PT Fuel Pump Calibration.* Columbus, IN: Cummins Engine Co., December, 1975.

E. *Service Bulletin No. 3379071-02: Injectors, All Types.* Columbus, IN: Cummins Engine Co., December, 1975.

F. *Service Bulletin No. 983725: Calibration of PT-G Pumps.* Columbus, IN: Cummins Engine Co., 1975.

G. *Service Bulletin No. 983535: Fuel Pump PT Rebuilding.* Columbus, IN: Cummins Engine Co., 1975.

H. *Service Bulletin No. 3379084-02: Fuel Pump PT Rebuilding.* Columbus, IN: Cummins Engine Co., 1980.

I. Dagel, John F. *Diesel Engine Repair.* New York: John Wiley and Sons, Inc., 1982.

J. Foutes, William A. *Diesel Engine Mechanics.* Stillwater, OK. Mid-America Vocational Curriculum Consortium, 1977.

PT FUEL SYSTEMS
UNIT VI

INFORMATION SHEET

I. Terms and definitions

A. PT system--Pressure time system based on the principle that the volume of liquid flow is proportionate to the fluid pressure, the time allowed to flow, and the size of the passage through which the liquid flows

B. PT type G--PT fuel pump which is governor controlled

C. PT type R--PT fuel pump which is pressure regulated

D. Purge--To get rid of trapped fuel

E. Rated speed--Engine rpm's under full load

F Meter--To supply in a measured amount

G. High idle or maximum no-load speed--Engine rpm's with no-load and throttle fully open

H. AFC--Air fuel ratio control

II. Main parts of PT fuel system (Transparency 1)

A. Fuel pump

B. Supply lines, drain lines, and passages

C. Injectors

III. Functions of units of PT pump assembly (Transparencies 2 and 3)

A. Gear pump--Draws fuel from supply tank forcing it through the pump filter screen into the pressure regulator valve

B. Pressure regulator--Limits the pressure of the fuel to the injectors

C. Throttle--Provides a manual control of fuel flow to the injector under all conditions in the operating range

D. Governor assembly--Controls the flow of fuel from idle to maximum governor speed

IV. Operation of PT injection system

A. Gear type fuel pump delivers fuel through a restricting throttle to the governor

B. From the governor, the fuel goes to a manifold which feeds cam-operated injectors in the cylinder head

INFORMATION SHEET

C. Injector raises pressure to produce a good spray, and times the start of injection

V. Function of pulsation damper--The damper contains a steel diaphragm which absorbs pulsations and smooths fuel flow through system (Transparency 2)

(NOTE: The pulsation damper, mounted on gear pump, performs the same function on both type G and type R fuel pumps.)

VI. Operation of mechanical governor (Transparency 3)

A. Between idle and maximum speed, fuel flows through the governor to the injector in accordance with engine requirements as controlled by the throttle

B. When engine reaches governed speed, the governor weights move the governor plungers so fuel passage to the injectors is shut off

(NOTE: At the same time another passage opens and dumps the fuel back into the main pump body. The engine speed is controlled and limited regardless of the position of the throttle.)

C. Fuel leaving the governor flows through the shut down valve, inlet supply lines, and onto the injectors

VII. Types of PT injectors (Transparency 4)

A. Flanged

B. Cylindrical

VIII. Operational steps of PT injectors (Transparency 5)

A. Metering

1. Fuel enters the injector at fuel inlet

(NOTE: Pressure is determined by throttle and/or governor.)

2. Metering orifice controls quantity of fuel that enters the injector cup

(NOTE: Pressure is determined by the fuel pump and the time interval during which the hole supplying fuel is uncovered by the injector plunger.)

B. Injection

1. Downward plunger movement cuts off fuel entry into injector cup

INFORMATION SHEET

2. Continued downward movement forces fuel from injector cup through the orifice into combustion chamber

   (NOTE: High pressures allow for almost complete burning of fuel spray.)

3. While plunger is down, fuel passes through upper hole around undercut in plunger through return passages to the fuel tank

C. Purging

1. Plunger remains seated after injection

   (NOTE: Fuel flows through the injector cooling it and warming tank fuel through this stage.)

2. Plunger rises on next metering operation

   (NOTE: The timing of metering and injection is determined by camshaft configuration.)

D. Air fuel ratio control (Transparencies 6 and 7)

1. Made to replace the PT-G-pump and aneroid on turbocharged engines

2. The A.F.C. limits fuel pressure and flow restriction

3. The A.F.C. gives the correct air fuel delivery rate to the engine during acceleration

Main Parts of PT Fuel System

Cummins

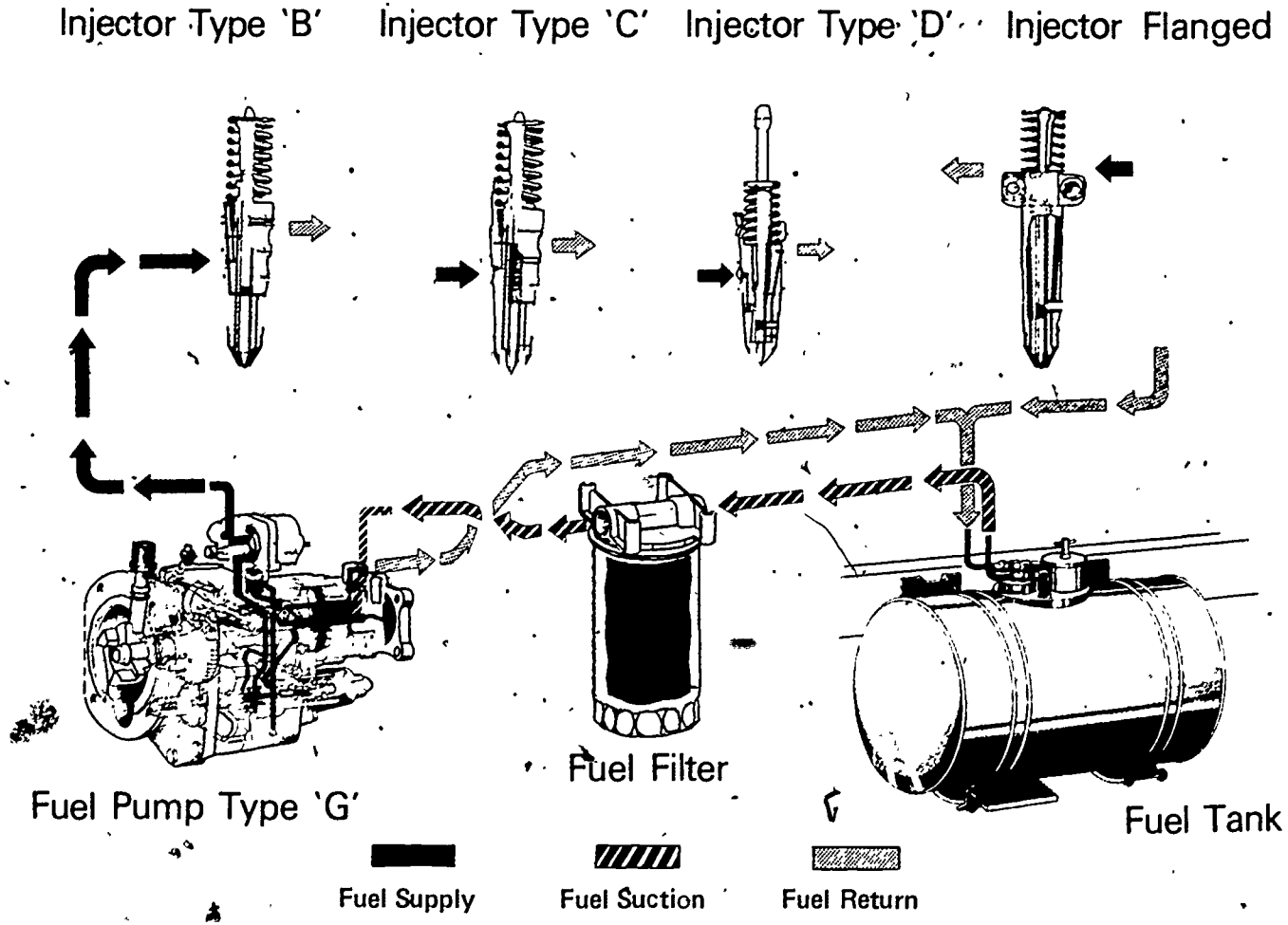

Courtesy of Cummins Engine Co., Inc.

PT Pump Assembly

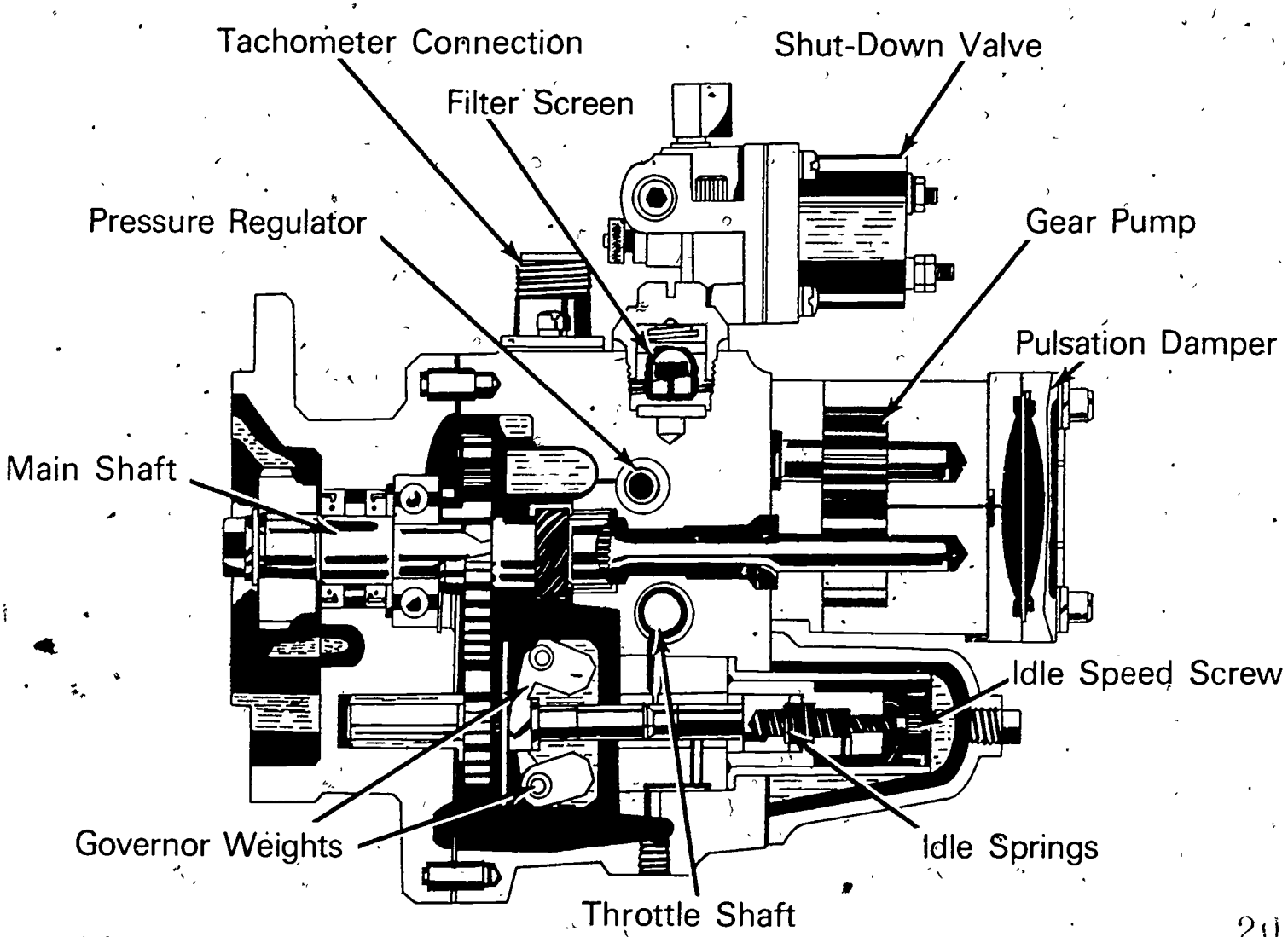

PT Pump Assembly

(Continued)

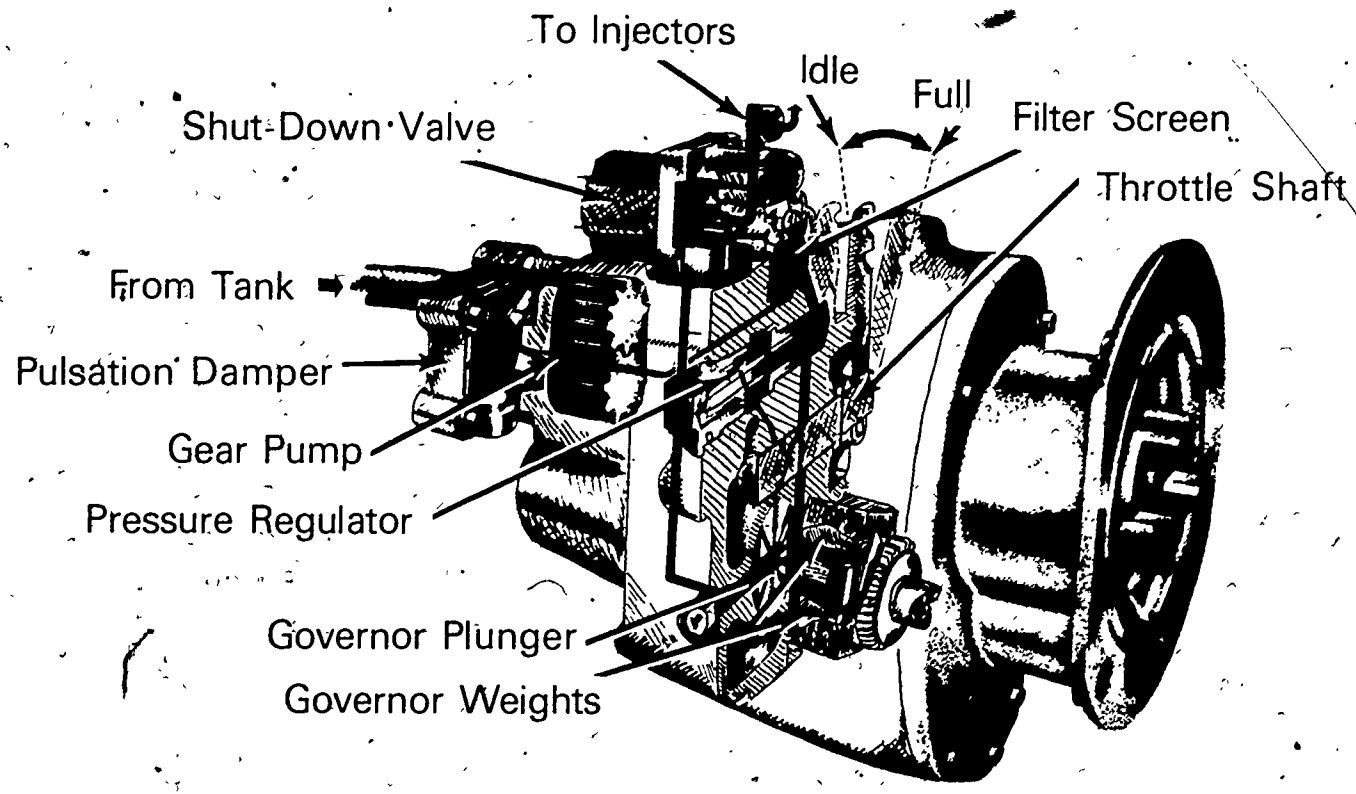

CUMMINS PT TYPE R FUEL INJECTION PUMP.

Types Of Injectors

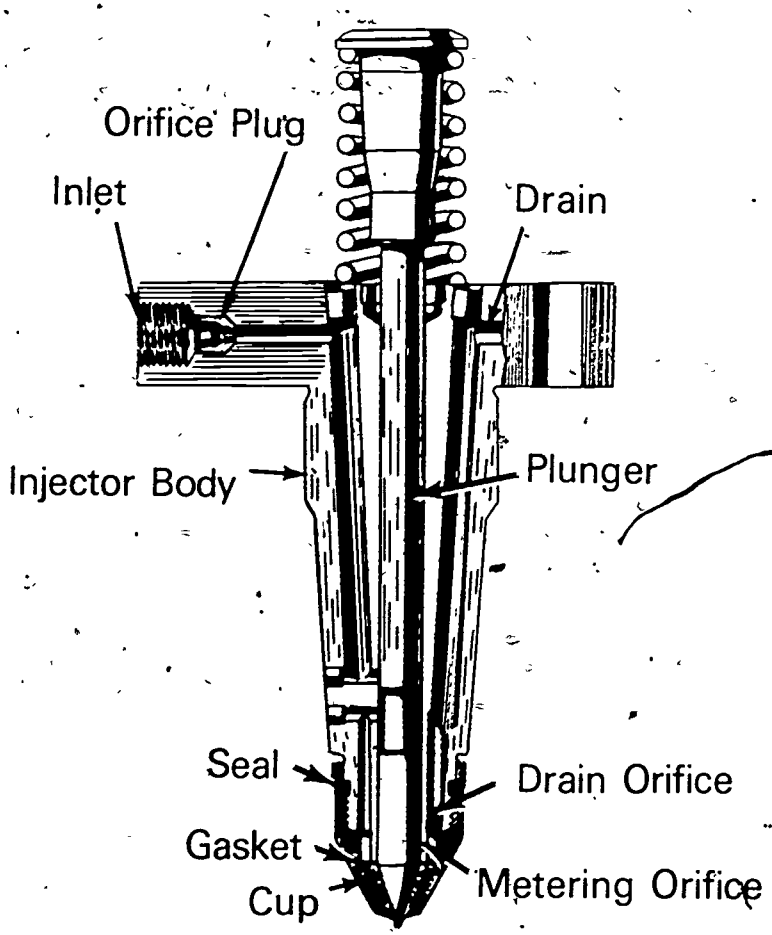

FLANGED TYPE INJECTOR

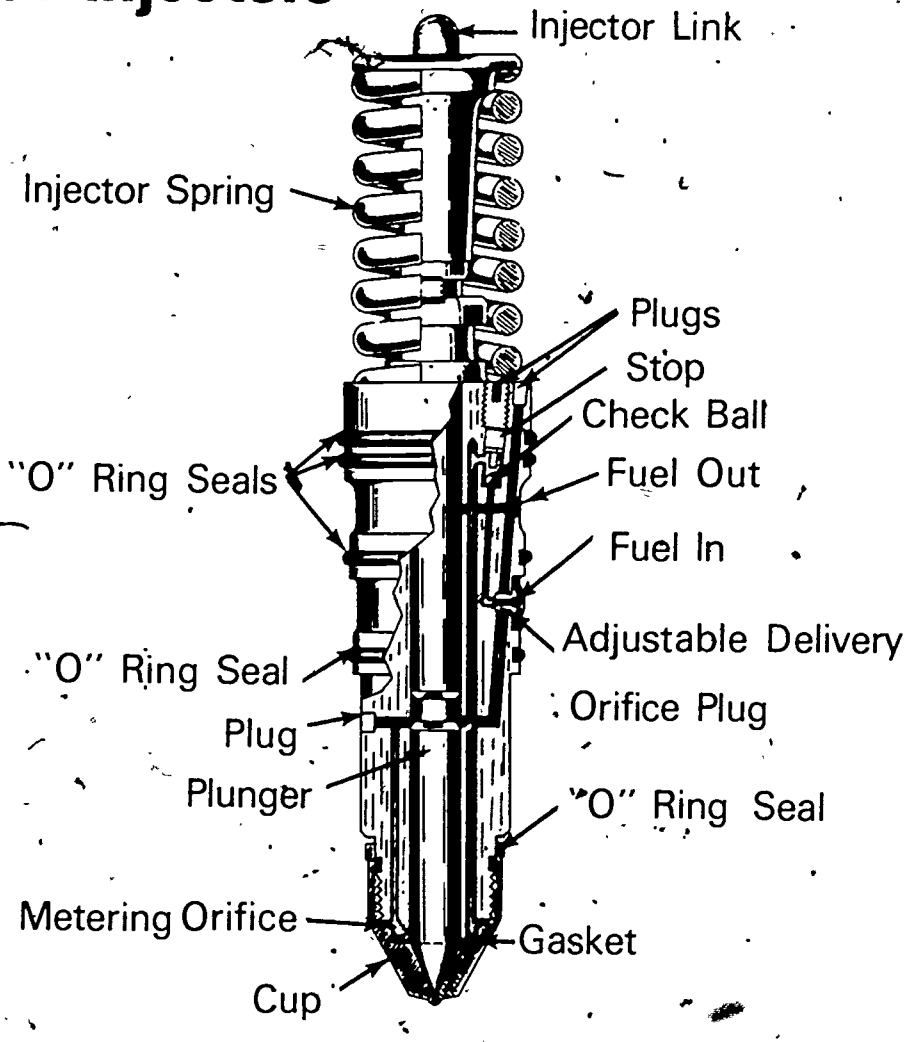

CYLINDRICAL INJECTOR

Operation Of Injectors

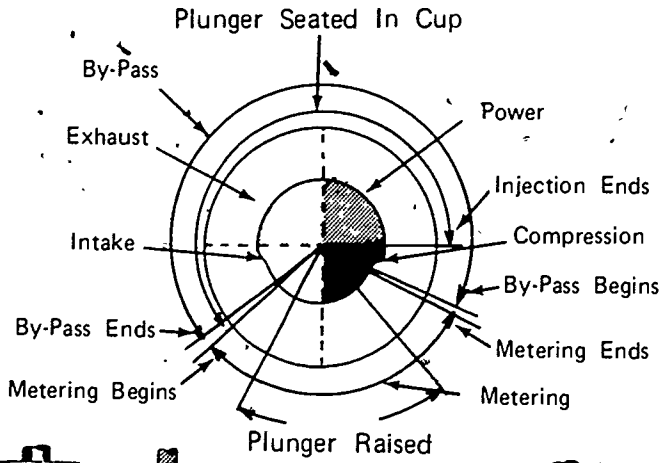

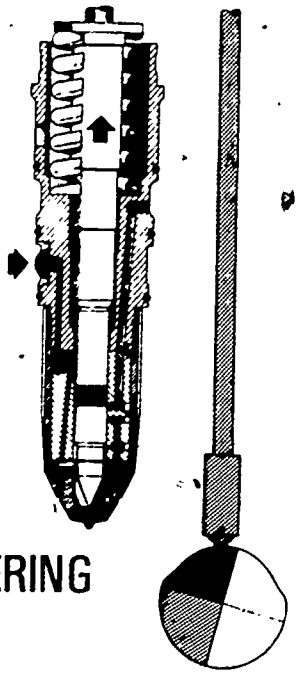

METERING

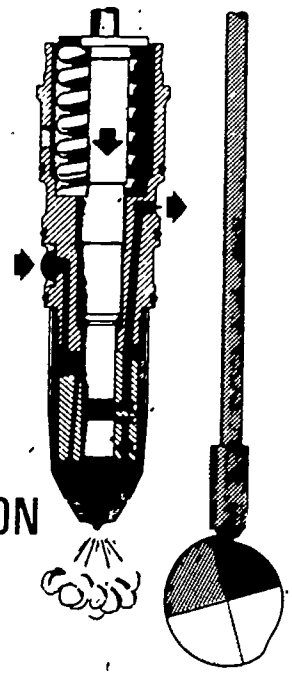

INJECTION

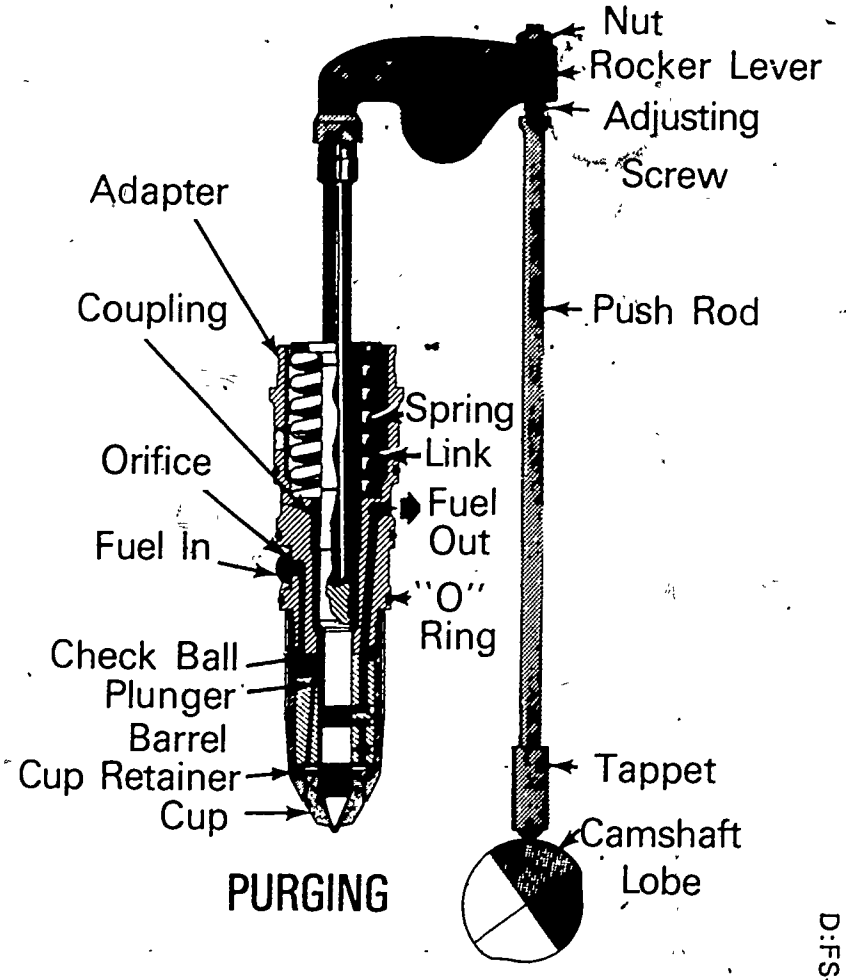

PURGING

D:FS-217

TM

AFC in the "Full Air" Position

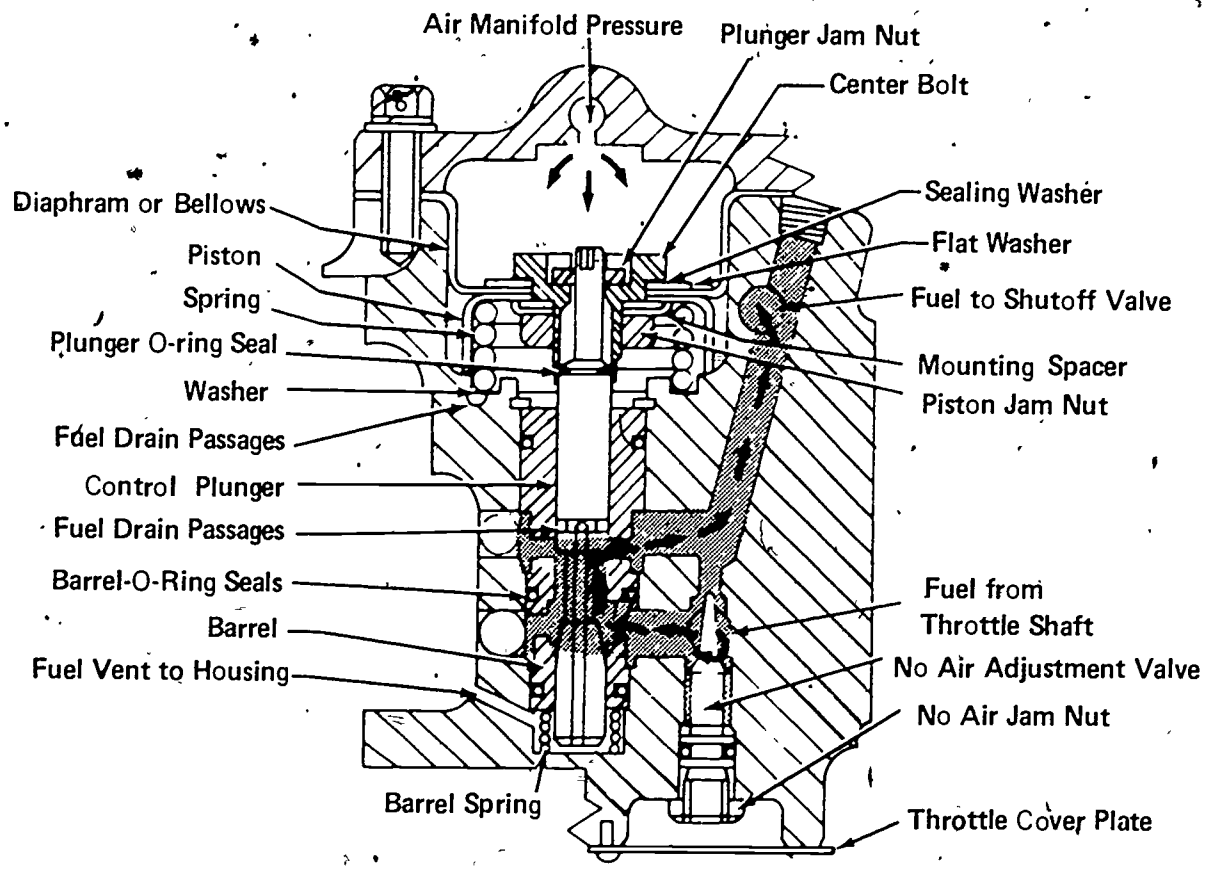

New Design with the AFC Control Plunger in the "Full Air" Position.
Used When the ASA is in the Fuel.

Courtesy of Cummins Engine Co., Inc.

TM

D:FS-219

AFC in the "No Air" Position

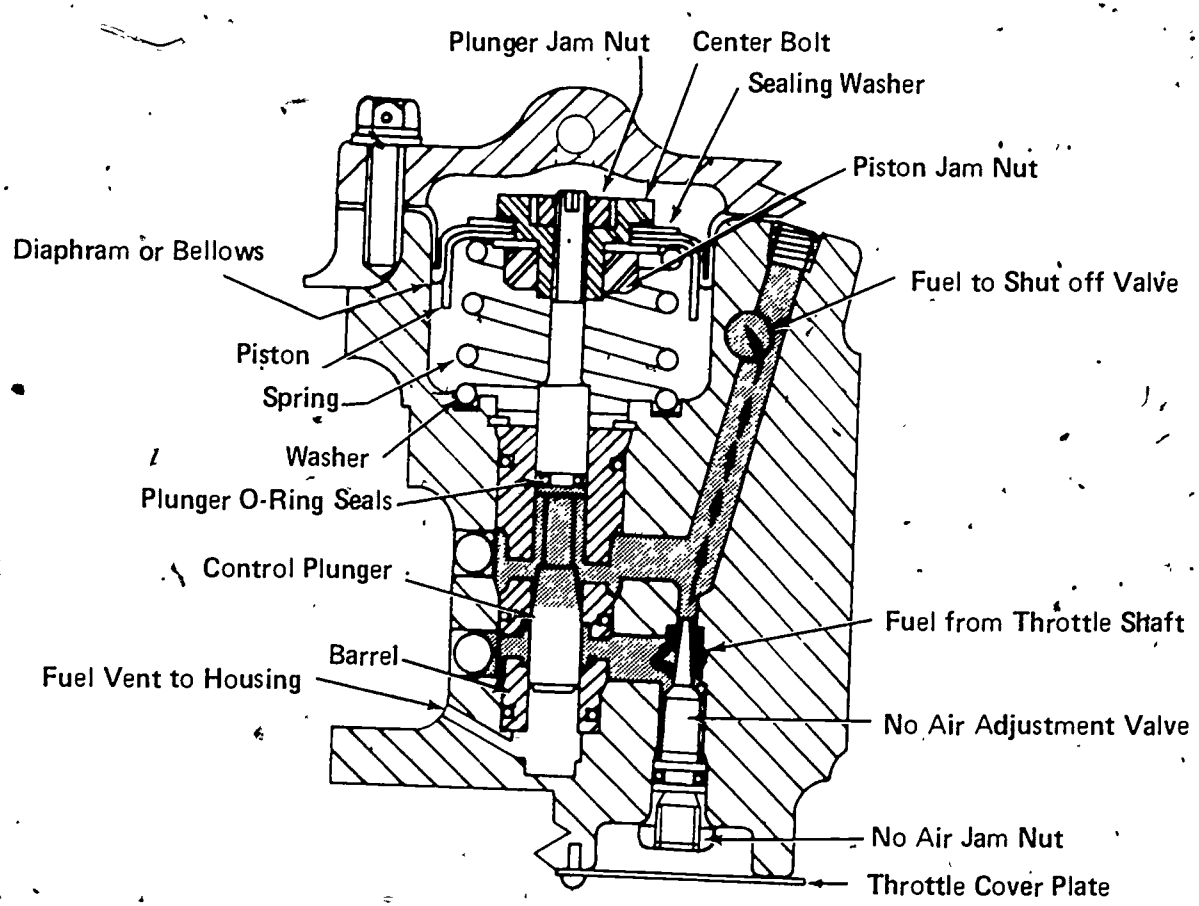

AFC Top View-Cross Section with the Control Plunger in the "No Air" Position.
Used When the ASA Was in the AFC Cover.

Courtesy of Cummins Engine Co., Inc.

PT FUEL SYSTEMS
UNIT VI

JOB SHEET #1--REMOVE AND INSTALL FLANGE TYPE PT INJECTORS

I. Tools and materials

A. Basic hand tool set

B. Appropriate service manual

C. Torque wrench

D. Oil can, hand type

E. Shop towels

F. Safety glasses

II. Procedure

(CAUTION: Follow all shop safety procedures.)

A. Remove injector

1. Remove injector hold-down capscrews

2. Pry and remove injector from cylinder head by grasping injector body rather than plunger

(NOTE: Do not turn injector upside down, as plunger might drop out.)

3. Place in drain rack

(NOTE: Do not damage injector tip and be careful not to lose the plate retaining collet; do not intermix plunger and injector bodies as they are paired.)

B. Install injector

1. Clean injector seat with clean rag wrapped around wooden stick

(NOTE: Never use screwdriver or metal tool for this operation; a scratched seat may cause compression leakage.)

2. Position injectors in head(s)

(NOTE: When installing injectors in head(s), position injector plunger so class mark is centered between inlet and drain connections. This provides the same plunger position under which the injector was tested in injector test stand. Be careful not to damage injector tips.)

JOB SHEET #1

3. Oil injector hold-down capscrews

4. Start, but do not tighten, hold-down capscrews into injector mounting holes in cylinder head(s)

5. Align injectors before tightening hold-down capscrews by screwing in the inlet and drain connections about three turns

6. Torque to 120 to 144 in-lb (14 to 16 N. m) in alternate steps

7. Start tightening on capscrews opposite inlet and drain connection

(NOTE: Some injector hold-down capscrews contain a Nylok insert that acts as a lock. These capscrews may be reused 5 to 10 times before the effectiveness of the insert is impaired. Nylock capscrews should be torqued to 144 to 168 in-lb [16 to 19 N. m].)

8. Torque inlet and drain connections to 240 to 300 in-lb (27 to 34 N. m)

9. Check air on tubes

(NOTE: Put in new copper washers. Check boots and filter screen.)

PT FUEL SYSTEMS
UNIT VI

JOB SHEET #2--REMOVE AND INSTALL PT (TYPE B, C, AND D) INJECTORS

I. – Tools and materials

A. Basic hand tool set

B. Appropriate service manual

C. Torque wrench

D. Oil can, hand type

E. Shop towels

F. Safety glasses

II. Procedure

(CAUTION: Follow all shop safety procedures.)

A. Remove injectors (type B and C)

1. Remove hold-down capscrews

2. Insert 3/8"-16 capscrew in tapped hole in hold-down plate and jack injector from head

3. Place injectors in rack for protection

4. Tag and number injectors by cylinder from which removed

(CAUTION: Do not damage injector tips.)

(NOTE: Older model engines have a separate jacking hole in the plate and utilize a standard hold-down capscrew for the jacking action.)

B. Install injectors (type B and C)

1. Clean injector sleeve with cloth wrapped around wooden stick

2. Lubricate the injector body O-rings with clean S.A.E. 20 or 30 weight lubricating oil

(NOTE: The O-rings should receive a fresh coat of oil each time injectors are installed in head.)

JOB SHEET #2

3. Start the injector into bore, guiding by hand until injector is aligned in bore and not binding in any manner

   (NOTE: To install injectors on V-12 engines, stand either on right bank side or left bank side of engine. On H or NH engines, install injectors from fuel pump side of engine. Injectors are to be placed with ball check retainer plug at one o'clock.)

4. Place plastic hammer handle butt on top of injector plunger body and "seat" injector by giving a quick, hard push on the hammer

   (NOTE: A "snap" should be heard and felt as the cup seats in the copper sleeve.)

5. Place hold-down plate over injector body with counterbore up

6. Position half-collet locking clamp in injector body groove

7. Start hold-down capscrews, but do not tighten

   (NOTE: Be sure the two projecting radii do not drop in drilled holes atop injector.)

8. Place injector spring on hold-down plate with close coil down

   (NOTE: Spring must seat on hold-down plate; if spring seats on locking clamp, incorrect injector adjustment will result, causing push tube and camshaft damage.)

9. Hold injector spring in position and carefully insert injector plunger

   (NOTE: On V-12 engines only, position plunger in injector bore with class mark on the plunger midway between inlet and drain ports of injector; the inlet port is below the ball retainer plug. This will provide the same operating position in which the injector was calibrated.)

10. Torque procedure for V-12 engines only

    a. Make sure injector is positioned correctly in head

    b. Tighten one capscrew (use Nylok capscrews) until clamp contacts head snugly; then back out one complete turn

    c. Tighten other capscrew to a torque of 48 to 60 in-lb (5 to 7 N. m)

    d. Tighten first capscrew to 84 to 96 in-lb (9 to 11 N. m)

    e. Tighten second capscrew to 84 to 96 in-lb (9 to 11 N. m)

JOB SHEET #2

f. Check the plunger to see if it is free

g. Loosen clamp and retorque if the plunger is not free

(NOTE: On H and NH engines, position plunger in injector bore with class mark on the plunger toward rear of engine. This will provide the same operating position in which the injector was calibrated.)

11. Torque hold-down capscrews in alternate steps to 132 to 144 in-lb (15 to 16 N. m)

C. Remove and install PT (type D) injectors

1. Remove injector hold-down plate or yoke

(NOTE: On some engines, special tools are needed to remove injectors; consult appropriate service manual.)

a. On NH, NT, and V-12 series engines you may insert a 3/8-16 capscrew in tapped hole in hold-down plate and jack injector from head

b. Use a right angle roll bar or pinch bar to pry injectors from head in "V" series engines

(NOTE: When prying up, be certain to keep the plunger and/or injector from jumping out of the head and landing on the floor.)

2. Remove all carbon from injector copper sleeves

(NOTE: Do not use anything metal to scrape the sleeves; use a wooden stick with a clean cloth wrapped around the end.)

3. Lubricate the O-rings with 20 to 30 weight lube oil; do not use Lubriplate

4. Start injector into bore, guiding by hand until aligned in bore and not binding

(NOTE: It is not required to line up any plugs or rotate injector around in any position as the PT (type D) will perform at any position.)

5. Place a clean blunt object on injector body and "seat" injector by giving a quick, hard push

JOB SHEET #2

6. Listen for the snap as cup seats in copper sleeve

   (NOTE: Do not use a wooden hammer handle or similar tool to install injectors. Dirt or splinters from the handle may drop into plunger link seat causing early failure of link or plunger socket. If injector is not completely seated, the O-rings may be damaged if pulled down with the mounting capscrews.)

7. Install hold-down plates or yokes, lockwashers, and capscrews

   (NOTE: Be certain plates or yokes do not contact crosshead stems.)

8. Torque NH, NT, and KT capscrews in alternate steps to 132 to 144 in-lb (15 to 16 N. m)

   a. Use Nylok capscrews on V-12 engines and torque alternately to 132 to 144 in-lb (15 to 16 N. m)

   b. Torque V-6-140, V-8-185, V-378, V-504, V-555, V-8-265 and V-903 capscrews to 360 to 420 in-lb (41 to 47 N. m)

9. Test injector plunger for movement after torquing hold-down capscrews. If plunger is not free, loosen and retorque capscrews

PT FUEL SYSTEMS
UNIT VI

JOB SHEET #3--ADJUST AN INJECTOR PLUNGER AND VALVES USING THE TORQUE METHOD

I. Tools and materials

A. V-378, V-504, V-555, or VT-555 C.I.D. series Cummins engine

(NOTE: For specific installation and models, refer to the engine manufacturer's specifications.)

B. Appropriate service manual

C. Basic hand tool set

D. Inch-pounds torque wrench

E. Foot-pounds torque wrench

F. Feeler gauge

G. Shop towels

H. Safety glasses

II. Procedure

(CAUTION: Follow all shop safety procedures.)

(NOTE: Retorque injector hold-down clamp capscrews to manufacturer's specifications before adjusting injectors.)

A. Position valves and mark alignment

1. Turn crankshaft in direction of rotation until No. 1-6 "VS" mark appears on the vibration damper or crankshaft pulley (Figure 1)

(NOTE: Some models may have "A" marked on damper.)

JOB SHEET #3

FIGURE 1

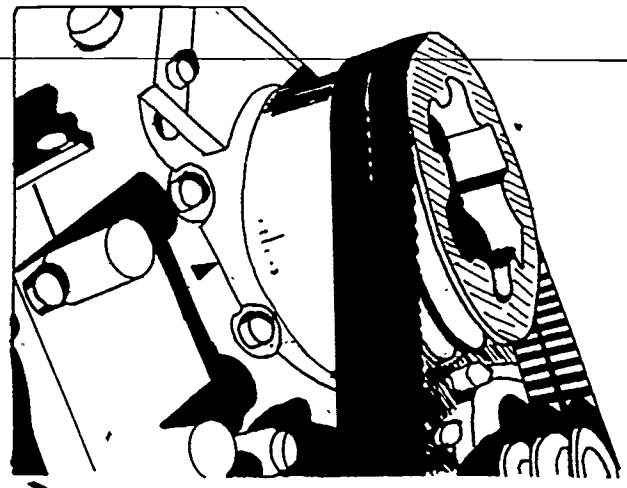

(NOTE: In this position, both intake and exhaust valves must be closed for cylinder No. 1; if not, advance crankshaft one revolution. See Figures 2 and 3 and Table 1 for firing order.)

FIGURE 2

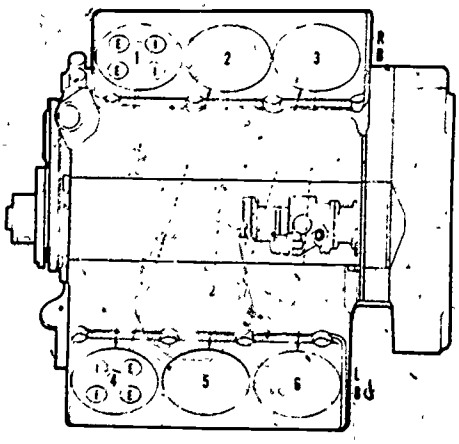

FIGURE 3

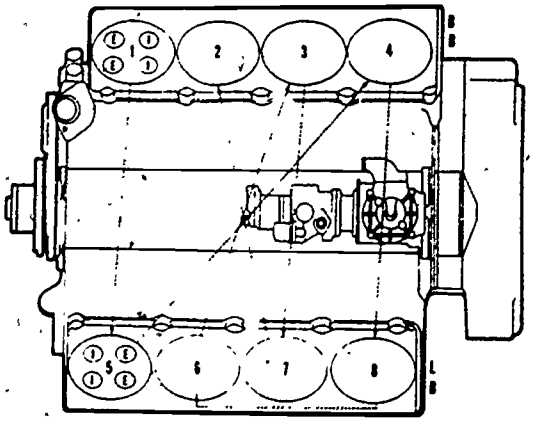

Table 1: Engine Firing Order

Right Hand Rotation	V8	1-5-4-8-6-3-7-2
Right Hand Rotation	V6	1-4-2-5-3-6

JOB SHEET #3

2. Adjust injector plunger, then crossheads and valves of first cylinder as explained in the following steps

3. Turn crankshaft in direction of rotation to next "VS" mark corresponding to firing order of engine and corresponding cylinder will be ready for adjustment (See Table 1)

4. Continue turning crankshaft in direction of rotation and making adjustments until all injectors and valves have been correctly adjusted

   (NOTE: Two complete revolutions of crankshaft are needed to set all injector plungers and valves. Injector and valves can be adjusted for only one cylinder at any one "VS" setting.)

B. Adjust crosshead

1. Loosen valve crosshead adjusting screw locknut and back off screw one turn

2. Use light finger pressure at rocker lever contact surface to hold crosshead in contact with valve stem (without adjusting screw)

3. Adjust crosshead adjusting screw according to engine manufacturer's specifications (Figure 4)

FIGURE 4

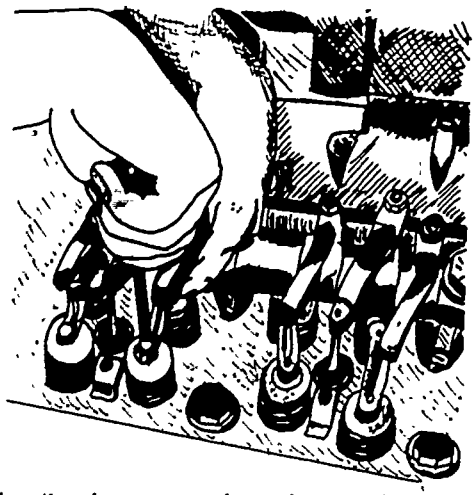

4. Hold adjusting screw in this position and torque locknut to values specified in appropriate service manual (Table 2)

Table 2: Crosshead Locknut Torque

Without ST-669	With ST-669
25 to 28 ft-lbs (34 to 38 N. m)	22 to 26 ft-lbs (30 to 35 N. m)

JOB SHEET #3

C. Adjust injector plunger

1. Turn adjusting screw down until plunger contacts cup and advance an additional 15° to squeeze oil from cup

2. Loosen adjusting screw one turn

3. Using a torque wrench calibrated in in-lbs and a screwdriver adapter, tighten the adjusting screw to values shown in Table 2 for cold setting and tighten the locknut to manufacturer's specification figures (Figure 5)

FIGURE 5

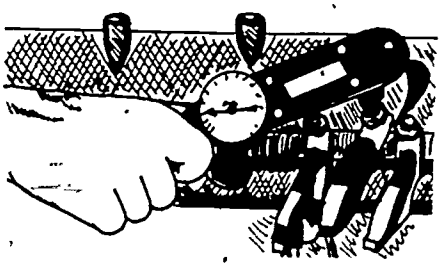

(NOTE: Some engines use different hot and cold torque settings.)

4. Hold injector adjusting screw and tighten injector adjusting screw locknut to value specified in appropriate service manual (Figure 6)

FIGURE 6

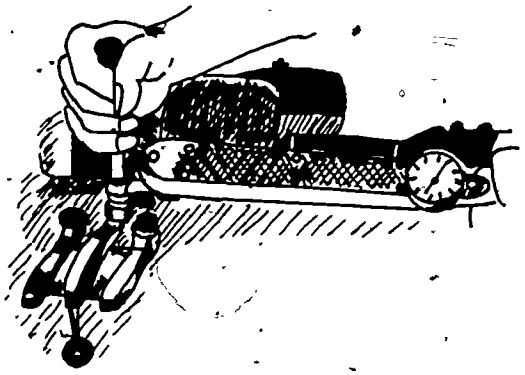

D. Adjust valves

(NOTE: The same crankshaft position used in adjusting injectors is used for setting intake and exhaust valves.)

1. Loosen locknut and back off adjusting screw

2. Insert feeler gauge between rocker lever and top of crosshead

(NOTE: Consult appropriate service manual for exact specifications.)

JOB SHEET #3

3. Turn screw down until lever just touches gauge and lock adjusting screw in this position with locknut (Figure 7)

4. Torque locknut to values indicated in service manual

FIGURE 7

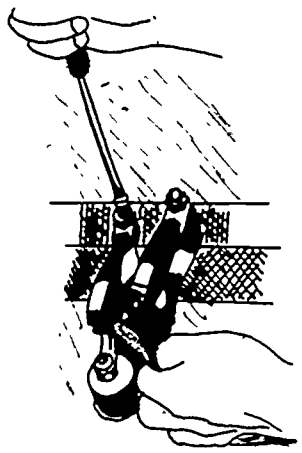

PT FUEL SYSTEMS
UNIT VI

JOB SHEET #4--INSTALL A PT-R FUEL PUMP AND ADJUST HIGH AND LOW ENGINE IDLE

I. Tools and materials

A. Basic hand tool set

B. Appropriate service manual

C. Cummins engine using PT-R fuel pump

D. PT-R fuel pump properly calibrated

E. Hand tachometer

F. Idle adjusting tool

G. Shop towels

H. Safety glasses

II. Procedure

(CAUTION: Follow all shop safety procedures.)

A. Install pump

(NOTE: Injectors and valves should be set to specifications and engine warmed to operating temperature.)

1. Install fuel pump to accessory drive or to compressor with new gasket and proper rubber buffer, nylon buffer, or spline coupling and tighten securely

2. Squirt some clean lube oil into gear pump inlet hole

   (NOTE: This aids gear pump fuel pick-up.)

3. Connect the fuel pump copper line from the pump shut-off valve to the fuel manifold

   (NOTE: The throttle lever linkage should not be connected to the throttle lever, thus leaving the throttle free for pump adjustments.)

4. Install tachometer to fuel pump tachometer drive shaft connection or use hand tachometer

5. Connect the shut-off valve electrical connections properly, leaving the manual control button in a closed position (screwed out)

6. Connect pump drain line to housing

JOB SHEET #4

B. Set governor

1. Set idle speed

a. Operate engine a sufficient period of time to purge air from the fuel system and to bring engine up to operating temperature (at least 165° F. oil temperature)

b. Remove pipe plug from spring pack cover

c. Install idle adjusting tool (Figure 1)

FIGURE 1

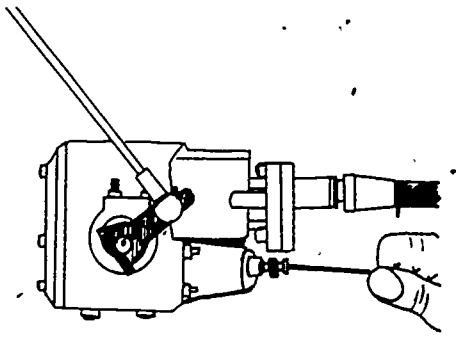

d. Operate engine a sufficient period of time to purge all air from the fuel system after idle adjusting tool is installed in spring pack cover

e. Turn idle adjusting screw in to increase or out to decrease the speed

(NOTE: The idle adjusting screw is held in position by a spring clip. Consult appropriate service manual for exact idle speeds.)

f. Remove idle adjusting tool and replace pipe plug when idle speed is correct

(NOTE: On the mechanical variable speed governor fuel pump the maximum and idle adjusting screws are located on governor cover; adjust idle by loosening rear idle adjusting screw locknut. Screw adjusting screw in or out to get speed required. Tighten adjusting screw locknut immediately after adjustment to prevent air entrainment.)

JOB SHEET #4

2. Set rated speed

   (NOTE: The engine should be "loaded" on an engine or chassis dynamometer to perform this check. Normally, this adjustment is made on the fuel pump test stand as the fuel pump is calibrated and does not need to be changed on the engine.)

3. Set engine hi-idle or maximum no-load speed

   (NOTE: This check should not be used to check or make governor speed adjustments. If the hi-idle speed is significantly greater than specifications, the governor assembly should be examined for malfunction or improper parts.)

PT FUEL SYSTEMS
UNIT VI

JOB SHEET #5--TEST AND ADJUST A PT-G FUEL PUMP

(NOTE: The job sheet detailed here is general and requires the use of test stand manual, pump specification sheet, and the appropriate engine service manual.)

I. Tools and materials

A. Basic hand tool set

B. Appropriate service manual

C. Test stand and adapters

D. Test stand manual

E. Pump special tools

F. PT-G fuel pump

G. Pump specification sheet

H. Shop towels (lint-free)

I. Safety glasses

II. Procedure

(CAUTION: Follow all shop safety procedures.)

A. Clean pump exterior thoroughly

B. Drain all fuel from pump and fill with pump stand oil

C. Mount pump as described in pump mounting section of manual

(NOTE: Run all tests with fuel temperature at 90° F.)

D. Perform the test for pump run-in

1. Determine pump rotation with stand in high range

2. Open pump shutdown valve, manifold valve, and suction valve on pump.

3. Close idle valve and bypass valve on pump discharge line

4. Turn on pump stand and run up to 500 rpm for pump to pick up prime

5. Run pump to rated speed for 5 minutes to seat bearings, flush pump, and purge air

6. Check for air in flow meter

JOB SHEET #5

E. Perform the test on the gear pump section--Operate test stand at 500 rpm and close section valve to 25" vacuum

F. Perform the test for pump suction

1. Turn stand to 100 rpm below rated speed

2. Adjust suction valve to 8" vacuum for remainder of tests

G. Perform the test for total fuel flow

1. Open manifold valve

2. Close idle and bypass valves

3. Set suction valve to 8" vacuum

4. Raise test stand speed to PT-G pump rated speed given on calibration sheet

5. Adjust manifold valve until flow meter float indicates the flow specified under "flowmeter-lb. @ rpm" on the calibration sheet

H. Perform the test for governor cut-off speed

1. Place throttle in full-fuel position

2. Increase test stand speed to a point where pressure begins to drop and check pump speed which should be within limits for "Governor Cut-Off RPM" on calibration sheet

3. Add shims on high speed governor spring if speed is outside limits

4. Remove shims to lower speed

(NOTE: Each .001" of shim will change 2 rpm.)

5. After adjusting "Governor Cut-Off RPM" raise stand speed until pressure gauge drops to 40 psi or what's stated under "Governor Setting PSI-RPM" in specification sheet

(NOTE: If more than 10-15 rpm higher, a change in governor barrel and plunger may be needed.)

I. Perform the test for throttle leakage

1. Operate a test stand at rated speed and flow

2. Hold throttle in idle position with throttle spring

3. Open bypass valve and close manifold valve

4. Place "graduate" under bypass tube and collect fuel for 30 seconds

JOB SHEET #5

5. Compare doubled amount to specification sheet and adjust front screw to required amount

   (NOTE: If leakage cannot be reduced, excess wear to throttle shaft is indicated.)

6. Lock screw when setting is correct

J. Perform the test for idle fuel pressure

1. Reduce test stand speed to 500 rpm or speed stated on specification sheet
2. Open idle valve and close manifold and bypass valve
3. Hold throttle in idle position
4. Note reading on pressure gauge
5. Adjust idle screw in spring back cover to correct pressure

   (NOTE: Screw in to increase and out to decrease pressure.)

6. Purge air after each setting

K. Perform the test for manifold fuel pressure

1. Open manifold valve and close the idle and bypass valve
2. Place throttle in full fuel position
3. Run stand at rated speed and adjust manifold valve to total fuel flow

   (NOTE: Pressure should agree to specification; adjust shims in throttle shaft to read 3 to 6 psi higher than specification sheet.)

4. Test flow meter to specifications
5. Turn in rear throttle screw to trim off 3 to 6 psi and bring pump to specification
6. Recheck governed speed and pressure

L. Check point pressure

1. Reduce stand speed to "Check Point" speed
2. Check manifold pressure at check point speed; if above or below, check torque spring for seating, shimming and part number
3. If spring is changed, recalibrate pump

JOB SHEET #5

M. Check weight assist pressure

1. Reduce stand speed to 800 rpm

(NOTE: Manifold pressure should fall within specification under "Weight Assist PSI.")

2. Add shims in governor weight carrier to raise pressure

3. Remove shims to lower pressure

4. If shims are changed, recalibrate pump

N. Drain and remove pump from test stand when calibration is complete

O. Seal all openings in pump

PT FUEL SYSTEMS
UNIT VI

JOB SHEET #6--ADJUST AN INJECTOR USING THE DIAL INDICATOR METHOD

I. Tools and materials

A. Basic hand tool set

B. Appropriate service manual

C. Typical tool #ST-1170 indicator support

D. Typical tool #ST-1193 rocker lever actuator

E. Clean shop towels

F. Safety glasses

II. Procedure

(CAUTION: Follow all shop safety procedures.)

A. Pull compression release lever back while barring engine

B. Bar engine until "A" or 1-6"VS" mark on pulley is aligned with pointer on gear case cover

(NOTE: In this position, both valve rocker levers for cylinder #5 must be free, valves closed, injector plunger for cylinder #3 must be at top of travel; if not, bar the engine 360 degrees and re-align marks with pointer.)

C. Turn the adjusting screw down on the cylinder being adjusted until plunger contacts cup and advance an additional 15 degrees to squeeze oil from the cup

D. Loosen the adjusting screw 1/2 turn

JOB SHEET #6

E. Set up ST-1170 (Figure 1) indicator support with indicator extension on injector plunger top at #3 cylinder

FIGURE 1

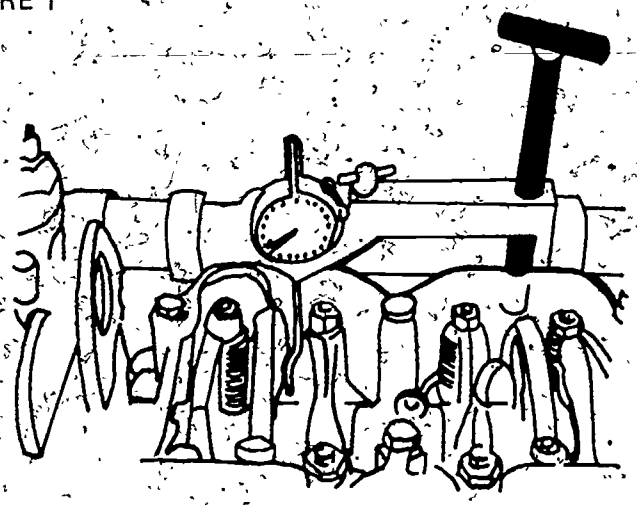

F. Using the ST-1193 rocker lever actuator (Figure 2), bar the lever toward injector until plunger is bottomed; allow the injector plunger to rise, bottom again; set indicator at zero, and check extension contact with plunger top

FIGURE 2

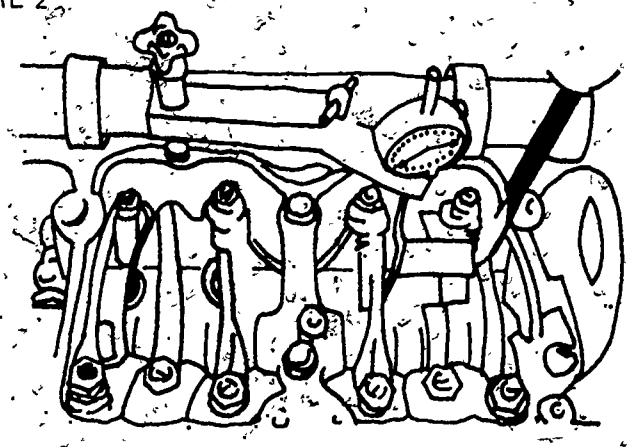

(NOTE: Make sure wrench does not strike gauge face.)

JOB SHEET #6

G. Turn adjusting screw until adjustment value is obtained (Figure 3)

FIGURE 3

Oil Temp.	Injector Plunger Travel Inch (mm)		Valve Clearance Inch (mm)	
	Adj. Value	Recheck Limit	Intake	Exhaust
Aluminum Rocker Housing				
Cold	0.170 (4.32)	0.169 to 0.171 (4.29 to 4.34)	0.011 (0.28)	0.023 (0.58)
Hot	0.170 (4.32)	0.169 to 0.171 (4.29 to 4.34)	0.008 (0.20)	0.123 (0.58)
Cast Iron Rocker Housing				
Cold	0.175 (4.45)	0. 174 to 0.176 (4.42 to 4.47)	0.011 (0.28)	0.023 (0.58)
Hot	0.175 (4.45)	0.174 to 0.176 (4.42 to 4.47)	0.008 (0.20)	0.023 (0.58)

(NOTE: This is a typical setting; check appropriate service manual for exact specifications.)

H. Bottom the plunger again and release the lever; indicator must show travel as indicated

I. Tighten locknut to 480 to 540 in-lbs (54 to 61 N. m)

PT FUEL SYSTEMS
UNIT VI

NAME _____

TEST

1. Match terms on the right with their correct definitions.

_____a. Pressure time system based on the principle that the volume of liquid flow is proportionate to the fluid pressure, the time allowed to flow, and the size of the passage through which the liquid flows	1. Purge
_____b. PT fuel pump which is governor controlled	2. Meter
_____c. PT fuel pump which is pressure regulated	3. PT type G
_____d. To get rid of trapped fuel	4. PT type R
_____e. Engine rpm's under full load	5. High idle or maximum no-load speed
_____f. To supply in a measured amount	6. PT system
_____g. Engine rpm's with no-load and throttle fully open	7. Rated speed
_____h. Air fuel ratio control	8. AFC

2. Name the three main parts of a PT fuel system.

a. _____

b. _____

c. _____

3. Match the main units of a PT pump assembly on the right with their functions.

_____a. Draws fuel from supply tank forcing it through the pump filter screen into the pressure regulator valve	1. Pressure regulator
_____b. Limits the pressure of the fuel to the injectors	2. Gear pump
_____c. Provides a manual control of fuel flow to the injector under all conditions in the operating range	3. Governor assembly
_____d. Controls the flow of fuel from idle to maximum governor speed	4. Throttle

4. Select true statements concerning the operation of a PT injection system by placing an "X" in the appropriate blanks.

   _____a. Gear type fuel pump delivers fuel through a restricting throttle to the governor

   _____b. From the fuel pump, the fuel goes to a manifold which feeds cam-operated injectors in the cylinder head

   _____c. Injector raises pressure to produce a good spray and times the start of injection

5. State the function of a pulsation damper.

   _____

   _____

6. Complete the following list of statements concerning the operation of a mechanical governor.

   a. Between idle and maximum speed, fuel flows through the governor to the injector in accordance with engine requirements as controlled by the throttle

   b. When engine reaches governed speed, the governor weights move the governor plungers so fuel passage to the injectors is _____

   c. Fuel leaving the governor flows through the shut down valve, inlet supply lines, and onto the _____

7. Name two types of PT injectors.

   a. _____

   b. _____

8. Match the operational steps of PT injectors at the right with their descriptions.

_____a.	1) Fuel enters the injector at fuel inlet	1. Injection
	2) Metering orifice controls quantity of fuel that enters the injector cup	2. Metering
		3. Purging
_____b.	1) Downward plunger movement cuts off fuel entry into injector cup	4. Air fuel ratio control
	2) Continued downward movement forces fuel from injector cup through the orifice into combustion chamber	
	3) While plunger is down, fuel passes through upper hole around undercut in plunger through return passages to the fuel tank	

_____c. 1) Plunger remains seated after injection

2) Plunger rises on next metering operation

_____d. 1) Made to replace the PT-G pump and aneroid on turbocharged engines

2) Limits fuel pressure and flow restriction

3) Gives the correct air fuel delivery rate to the engine during acceleration

9. Demonstrate the ability to

a. Remove and install flange type PT injectors.

b. Remove and install PT (type B, C, and D) injectors.

c. Adjust an injector plunger and valves using the torque method.

d. Install a PT-R fuel pump and adjust high and low engine idle.

e. Test and adjust a PT-G fuel pump.

f. Adjust an injector using the dial indicator method.

(NOTE: If these activities have not been accomplished prior to the test, ask your instructor when they should be completed.)

PT FUEL SYSTEMS
UNIT VI

ANSWERS TO TEST

1. a. 6
   b. 3
   c. 4
   d. 1
   e. 7
   f. 2
   g. 5
   h. 8

2. a. Fuel pump
   b. Supply lines, drain lines, and passages
   c. Injectors

3. a. 2
   b. 1
   c. 4
   d. 3

4. a, c

5. The damper contains a steel diaphragm which absorbs pulsations and smooths fuel flow through system

6. b. Shut off
   c. Injectors

7. a. Flanged
   b. Cylindrical

8. a. 2
   b. 1
   c. 3
   d. 4

9. Performance skills evaluated to the satisfaction of the instructor

INJECTION NOZZLES
UNIT VII

UNIT OBJECTIVE

After completion of this unit, the student should be able to list the functions of an injection nozzle and match types of nozzles with their characteristics. The student should also be able to demonstrate the ability to remove, service and test an injection nozzle. This knowledge will be evidenced by correctly performing the procedures outlined in the job sheets and by scoring 85 percent on the unit test.

SPECIFIC OBJECTIVES

After completion of this unit, the student should be able to:

1. Match terms related to injection nozzles with their correct definitions.
2. List two functions of an injection nozzle.
3. Name four moving parts in an injection nozzle.
4. Name three common types of nozzle valves.
5. Match the types of nozzles with their characteristics.
6. Select true statements concerning the operation of an injection nozzle.
7. Explain how the nozzle opening pressure is adjusted.
8. Demonstrate the ability to:
   a. Remove, service, and test an injection nozzle.
   b. Install an injection nozzle.
   c. Isolate a faulty injection nozzle.

INJECTION NOZZLES
UNIT VII

SUGGESTED ACTIVITIES

I. Provide student with objective sheet.

II. Provide student with information and job sheets.

III. Make transparencies.

IV. Discuss unit and specific objectives.

V. Discuss information sheet.

VI. Demonstrate and discuss the procedures outlined in the job sheets.

VII. Demonstrate lapping and cleaning procedures.

VIII. Show students different ways an injector may be held in place.

IX. Demonstrate how to clean injector area prior to injector removal.

X. Discuss the use of capsule-type fuel nozzles on Caterpillar engines.

XI. Give test.

INSTRUCTIONAL MATERIALS

I. Included in this unit:

A. Objective sheet

B. Information sheet

C. Transparency masters

1. TM 1--Moving Parts in Nozzle
2. TM 2--Nozzle Valve Assembly

D. Job Sheets

1. Job Sheet #1--Remove, Service, and Test an Injection Nozzle
2. Job Sheet #2--Install an Injection Nozzle
3. Job Sheet #3--Isolate a Faulty Injection Nozzle

E. Test

F. Answers to test

II. References:

A. Toboldt, William K. *Diesel Fundamentals, Service, Repair*. South Holland, IL: Goodheart-Willcox Company, Inc., 1980.

B. Kates, Edgar J., and Luck, William E. Third Edition. *Diesel and High Compression Gas Engines*. Chicago: American Technical Society, 1974.

C. *Fundamentals of Service: Engines*. Fifth Edition. Moline, IL: Deere and Company, 1980.

D. *Robert Bosch Corporation Bulletin, No. 221103*. 4131-A Directors Row, Houston, TX 77018.

E. Dagel, John F. *Diesel Engine Repair*. New York: John Wiley and Sons, Inc., 1982.

F. Foutes, William A. *Diesel Engine Mechanics*. Stillwater, OK: Mid-America Vocational Curriculum Consortium, 1977.

INJECTION NOZZLES
UNIT VII

INFORMATION SHEET

I. Terms and definitions

A. Pintle--Valve in which the end extends into a shank or pin

B. Orifice--Small hole

C. Injection nozzle--Nozzle, nozzle holder, valve, and spring assembly

D. Nozzle assembly--Valve, body, and spray valve

II. Functions of injection nozzle

A. Atomizes the fuel for better combustion

B. Spreads the fuel spray to fully mix with air

III. Moving parts (Transparency 1)

A. Valve

B. Spring

C. Spindle

D. Retainer

IV. Common types of nozzle valves (Transparency 2)

A. Single hole

B. Multiple orifice

C. Pintle type, single hole

V. Nozzle characteristics (Transparency 2)

A. Hole type--Used for engines with open combustion chambers

B. Pintle type (inward-opening)--Produces a hollow spray; used for engines with precombustion chambers or energy cells

C. Pintle type (outward-opening)--Does not dribble fuel; used for engines with precombustion chamber or energy cell

D. Multiple orifice--Variation of pintle type; holes have a tendency to clog

INFORMATION SHEET

VI. Operation of injection nozzle

A. Hydraulically operated by fuel delivered from the injection pump

B. Spring loaded valve is lifted allowing pressurized fuel to spray out through one or more orifices into combustion chamber

(NOTE: Some injection nozzles have adjustable valve lifts. Refer to manufacturer's service manual.)

VII. Adjustment of nozzle opening pressure--Adjusted by a screw or shims on the valve spring (Transparency 1)

Moving Parts In Nozzle

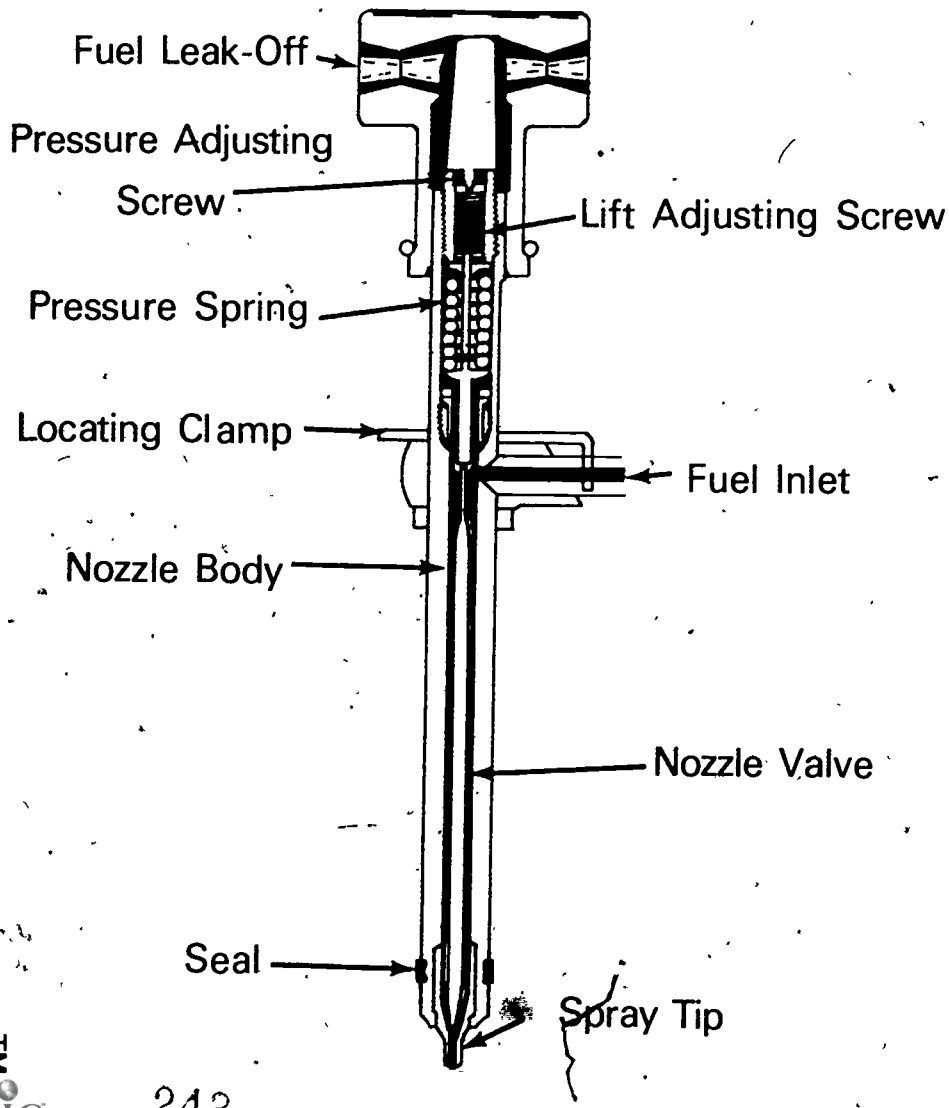

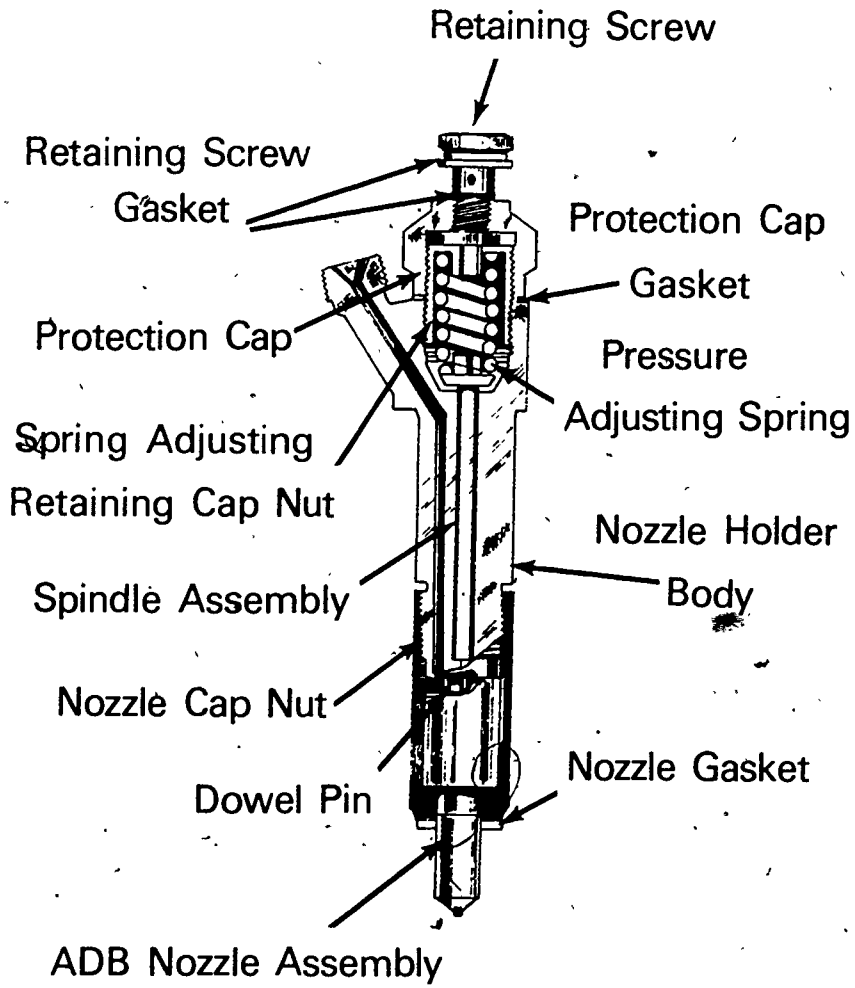

Nozzle Valve Assembly

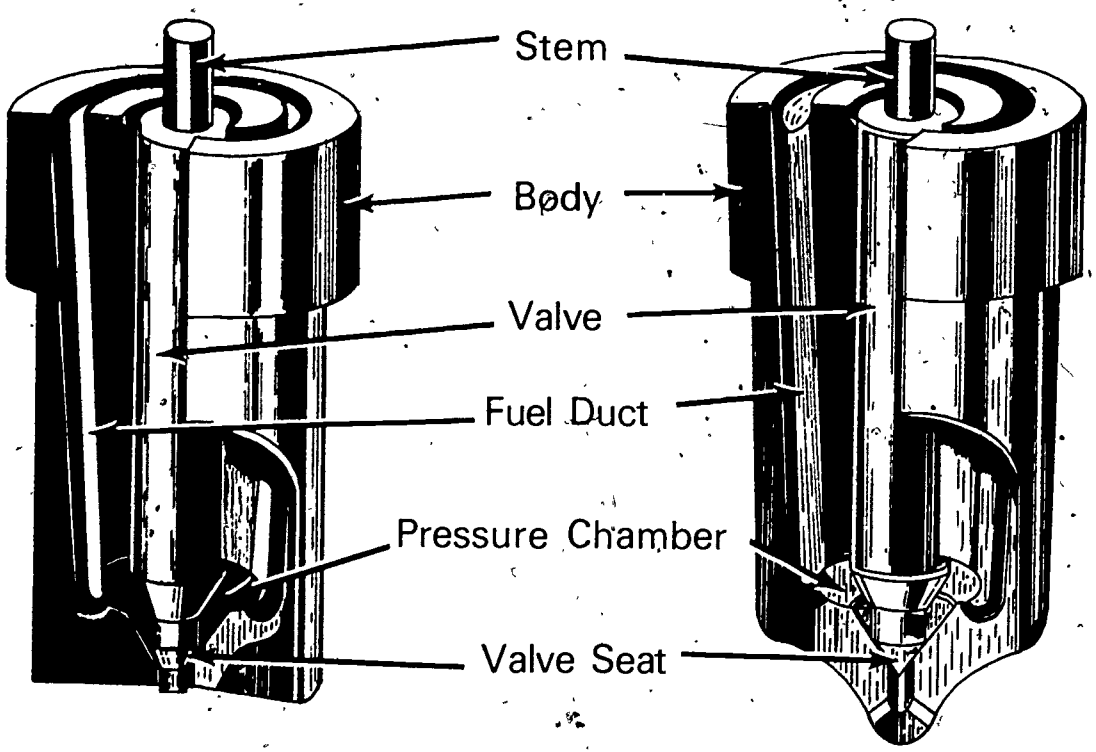

Pintle

Orifice

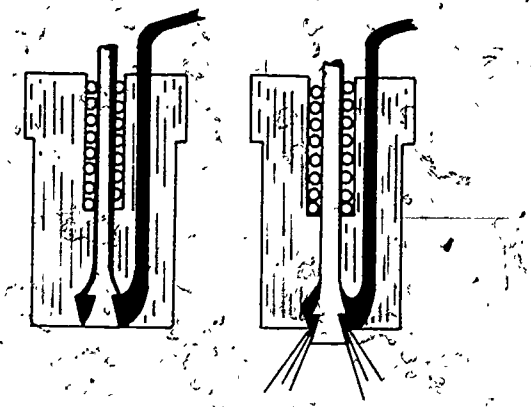

Closed Open

Outward-Opening

Pintle-Type

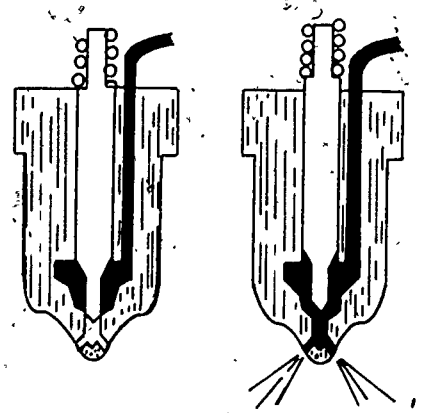

Closed Open

Inward-Opening

Hole-Type

INJECTION NOZZLES
UNIT VII

JOB SHEET #1-REMOVE, SERVICE, AND TEST AN INJECTION NOZZLE

I. Tools and materials

A. Nozzle tester

B. Appropriate service tool kit

C. Appropriate service manual

D. Safety glasses

II. Procedure

(NOTE: The job sheet detailed here is general; for specific installations and models, follow the specifications and procedures according to the engine manufacturer's instruction manual.)

(CAUTION: Follow all shop safety procedures.)

A. Remove nozzle

1. Clean the area around the nozzle

2. Remove and cap the injection and leak-off lines

3. Remove the nozzle from the engine

(NOTE: Some nozzles may require special tools or procedures for removal. See manufacturer's service manual.)

B. Clean nozzle

1. Soak entire nozzle assembly in clean solvent or calibration fluid after discarding outer seals

JOB SHEET #1

2. Clean and decarbon spray tip and nozzle body with a brass wire brush (Figure 1)

   (NOTE: Never use emery cloth or steel wire brush because the precision tip will be damaged.)

   FIGURE 1

C. Test nozzle

(NOTE: All nozzles require careful handling and a special tool kit to perform any service. When working on several nozzles, DO NOT mix nozzle parts.)

1. Place nozzle into nozzle holder
2. Tighten nozzle nut, first by hand, then with correct size wrench
3. Torque nozzle according to the values given by the engine manufacturer's specification
4. Connect the nozzle holder with the delivery line to the tester

JOB SHEET #1

5. Enclose nozzle in transparent beaker, if possible (Figure 2)

   (CAUTION: The fuel comes out of nozzle at extremely high-pressure which can penetrate clothing and skin and cause injury; always keep the nozzle pointed away from you or enclose in beaker.)

FIGURE 2

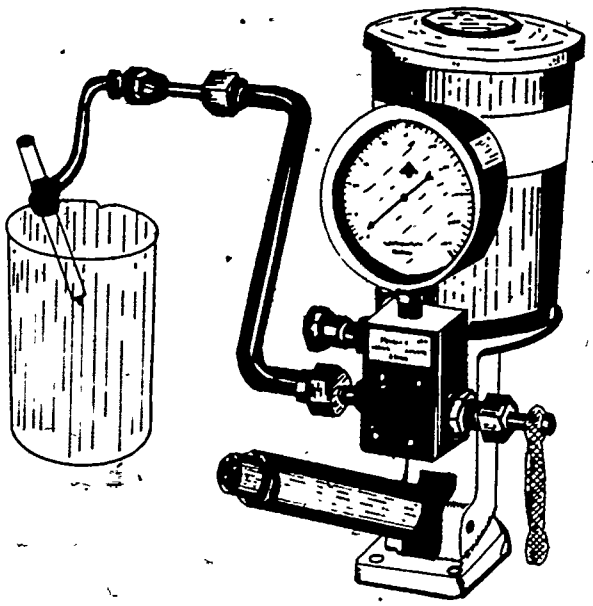

6. Test for nozzle jamming by pressing hand lever of nozzle tester down quickly (6-8 times) with the pressure gauge bypassed

   (NOTE: When valve moves properly, the nozzle should chatter with a shrill whistling buzz; an exception to the rule is the type nozzle with one or two small spray holes that will not chatter when lever is operated quickly.)

7. Open pressure gauge

8. Depress hand lever slowly until the nozzle ejects with slight chatter

9. Take reading of opening pressure on the pressure gauge

   (NOTE: Adjust to opening pressure specified in the engine operating instructions.)

JOB SHEET #1

10. Turn adjusting screw, (Figure 3), or change total shim thickness (Figure 4), if reading differs from specified opening pressure

(NOTE: Opening pressure is not adjusted by shims on all models.)

FIGURE 3

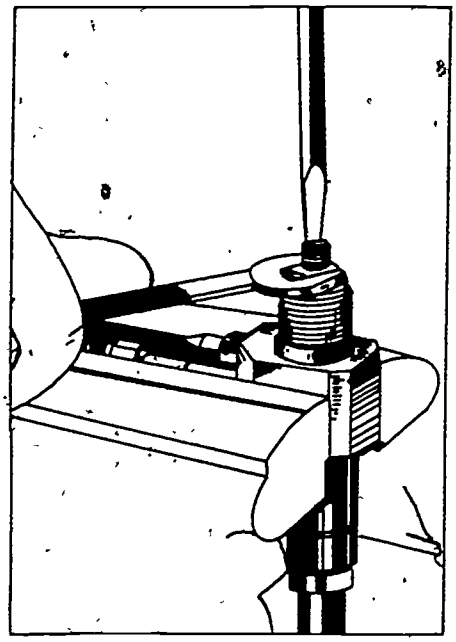

FIGURE 4

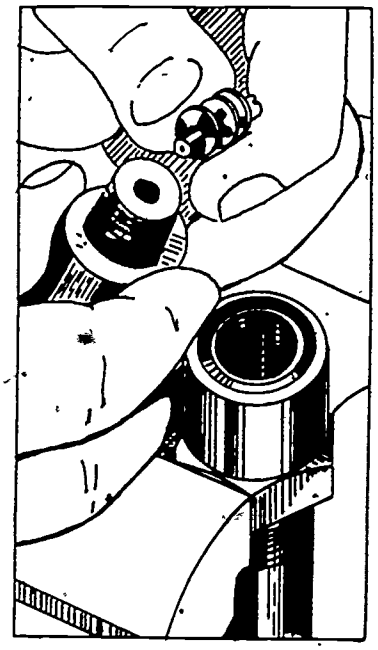

D. Test leakage–Operate the hand lever of the nozzle tester until the pointer on the pressure gauge indicates 285 psi below the specified opening pressure

(NOTE: The nozzle is considered leakproof if no oil emerges at the nipple tip within 10 seconds.)

INJECTION NOZZLES
UNIT VII

JOB SHEET #2--INSTALL AN INJECTION NOZZLE

I. Tools and materials

A. Basic shop tools

B. Appropriate service manual

C. Cleaning solvent

D. Torque wrench

E. Typical tools as required

II. Procedure

(CAUTION: Follow all shop safety procedures.)

A. Clean nozzle in diesel fuel

B. Clean area around nozzle (seat or bore)

C. Clean nozzle tube of any foreign material

D. Install new seal washer

E. Place nozzle carefully in cylinder head

F. Tighten nozzle hold-down bolts evenly

G. Torque nozzle bolts or nuts to manufacturer's specifications

H. Connect fuel lines to injector

I. Torque fuel lines to manufacturer's specifications

(CAUTION: Do not overtighten fuel line[s] as this will damage fuel line.)

INJECTION NOZZLES
UNIT VII

JOB SHEET #3--ISOLATE A FAULTY INJECTION NOZZLE

I. Tools and materials

A. Basic hand tools

B. Appropriate service manual

C. Remote tachometer

D. Clean diesel fuel

E. Clean shop towels

F. Safety glasses

II. Procedure

(CAUTION: Follow all shop safety procedures.)

A. Disconnect tach drive cable

B. Connect remote tachometer

C. Start the engine

D. Loosen injector line on #1 cylinder

(NOTE: Fuel flow should be evident.)

E. Listen for a change in engine speed, and watch tachometer for an rpm drop

(NOTE: An injector that is operating correctly will cause an rpm drop in engine; refer to manufacturer's specifications for the correct amount.)

F. Repeat for each cylinder

G. Remove and repair any faulty nozzles

INJECTION NOZZLES
UNIT VII

NAME _____

TEST

1. Match the terms on the right with their correct definitions.

_____a. Valve in which the end extends into a shank or pin	1. Orifice
_____b. Small hole	2. Injection nozzle
_____c. Nozzle, nozzle holder, valve, and spring assembly	3. Pintle
_____d. Valve, body, and spray valve	4. Nozzle assembly

2. List two functions of an injection nozzle.

   a. _____

   b. _____

3. Name four moving parts in an injection nozzle.

   a. _____

   b. _____

   c. _____

   d. _____

4. Name three common types of nozzle valves.

   a. _____

   b. _____

   c. _____

5. Match the types of nozzles on the right with their characteristics.

_____a. Used for engines with open combustion chambers	1. Pintle type (outward-opening)
_____b. Produces a hollow spray; used for engines with precombustion chambers or energy cells	2. Multiple orifice
_____c. Does not dribble fuel; used for engines with precombustion chamber or energy cell	3. Pintle type (inward-opening)
_____d. Variation of pintle type; holes have a tendency to clog	4. Hole type

6. Select true statements concerning the operation of an injection nozzle by placing an "X" in the appropriate blanks.

_____a. Hydraulically operated by fuel delivered from the injection pump

_____b. Spring loaded valve is lifted allowing pressurized fuel to spray out through one or more orifices into combustion chamber

7. Explain how the nozzle opening pressure is adjusted.

_____

_____

8. Demonstrate the ability to:

a. Remove, service, and test an injection nozzle.

b. Install an injection nozzle.

c. Isolate a faulty injection nozzle.

(NOTE: If these activities have not been accomplished prior to the test, ask your instructor when they should be completed.)

7

INJECTION NOZZLES
UNIT VII

ANSWERS TO TEST

1. a. 3
   b. 1
   c. 2
   d. 4

2. a. Atomizes the fuel for better combustion
   b. Spreads the fuel spray to fully mix with air

3. a. Valve
   b. Spring
   c. Spindle
   d. Retainer

4. a. Single hole
   b. Multiple orifice
   c. Pintle type, single hole

5. a. 4
   b. 3
   c. 1
   d. 2

6. a, b

7. Adjusted by a screw or shims on the valve spring

8. Performance skills evaluated to the satisfaction of the instructor

GOVERNORS
UNIT VIII

UNIT OBJECTIVE

After completion of this unit, the student should be able to discuss the operation of the governor on load increase and load decrease and distinguish between a mechanical and hydraulic governor. The student should also be able to demonstrate the ability to adjust a limiting speed mechanical governor and injector rack control. This knowledge will be evidenced by correctly performing the procedures outlined in the job sheet and by scoring 85 percent on the unit test.

SPECIFIC OBJECTIVES

After completion of this unit, the student should be able to:

1. Match terms related to governors with their correct definitions.
2. List three purposes of a governor.
3. Name two basic types of governors using flyweights.
4. Distinguish between a mechanical governor and a hydraulic governor.
5. Name two types of mechanical governors.
6. Name two types of hydraulic governors.
7. Match the kinds of governors with their special functions.
8. Match the types of governors with their characteristics.
9. Select true statements concerning the operation of the governor on load increase.
10. Complete a list of statements concerning the operation of the governor on load decrease.
11. Identify the position of flyweights for load increase or decrease.
12. Complete a list of characteristics of an isochronous governor.
13. Select true statements concerning characteristics of a limiting speed mechanical governor.
14. Demonstrate the ability to adjust a limiting speed mechanical governor and injector rack control.

GOVERNORS
UNIT VIII

SUGGESTED ACTIVITIES

I. Provide student with objective sheet.

II. Provide student with information and job sheets.

III. Make transparencies.

IV. Discuss unit and specific objectives.

V. Discuss information sheet.

VI. Demonstrate and discuss the procedure outlined in the job sheet.

VII. Make a display of different types of governors.

VIII. Show a film on setting a GM governor.

IX. Demonstrate the weight overcoming the spring and its effect.

X. Give test.

INSTRUCTIONAL MATERIALS

I. Included in this unit:

A. Objective sheet

B. Information sheet

C. Transparency masters

1. TM 1--Schematic of Governors
2. TM 2--Limiting Speed Mechanical Governor
3. TM 3--Variable Speed Mechanical Governor
4. TM 4--Operation of Variable Speed Mechanical Governor-Stages 1 and 2
5. TM 5--Operation of Variable Speed Mechanical Governor-Stages 3 and 4
6. TM 6--Nonisochronous Governor
7. TM 7--Isochronous Governor
8. TM 8--Governor Operation

D. Job Sheet #1--Adjust a Limiting Speed Mechanical Governor and Injector Rack Control

E. Test

F. Answers to test

II. References:

A. Kates, Edgar J., and Luck, William E. *Diesel and High Compression Gas Engines*. Third Edition. Chicago: American Technical Society, 1974.

B. *Fundamentals of Service: Engines*. Fifth Edition. Moline, IL: Deere and Company, 1980.

C. Toboldt, William K. *Diesel Fundamentals, Service, Repair*. South Holland, IL: Goodheart-Willcox Company, Inc., 1980.

D. Dagel, John F. *Diesel Engine Repair*. New York: John Wiley and Sons, Inc., 1982.

E. Foutes, William A. *Diesel Engine Mechanics*. Stillwater, OK: Mid-America Vocational Curriculum Consortium, 1977.

GOVERNORS
UNIT VIII

INFORMATION SHEET

I. Terms and definitions

A. Governor--Device that controls engine speed automatically by varying fuel supply

B. Speed drift--Gradual deviation of the governed speed above or below the desired speed

C. Speed droop--Change in governor rotating speed which causes the governor's fuel control rod to move from full-closed to full-open throttle position or vice versa

D. Dead band--Change in speed the engine must make before the governor will make a corrective movement of the throttle

(NOTE: Dead band is sometimes called sensitivity.)

E. Hunting--Oscillations in speed due to over-correction by governor

(NOTE: Hunting is sometimes called surging or rolling.)

F. Servomotor--Piston moved by fluid under pressure

G. Isochronous--Holds engine speed within 1% of rated load rpm; eliminates speed droop

H. Flyweights--Centrifugal ball head moving in a circular path

II. Purposes of a governor

A. Maintains a selected speed

B. Limits the slow and fast speed

C. Shuts down engine when it over-speeds

III. Basic types of governors using flyweights

A. Mechanical

B. Hydraulic

IV. Mechanical and hydraulic governor differences (Transparency 1)

A. Mechanical governor uses mechanical linkage to change engine fuel control

B. Hydraulic governor uses hydraulic power to change engine fuel control

INFORMATION SHEET

V. Types of mechanical governors (Transparencies 2, 3, 4, and 5)

A. Limiting speed

B. Variable speed

VI. Types of hydraulic governors (Transparencies 6 and 7)

A. Permanent speed droop

(NOTE: Speed droop is applied to prevent hunting.)

B. Temporary speed droop

(NOTE: Speed droop is applied and then withdrawn so governor becomes isochronous.)

VII. Governors and their special functions

A. Variable speed--Maintains any selected engine speed

B. Over-speed--A safety device which shuts down the engine in case it runs too fast

C. Load limiting--Limits the load to prevent overloading the engine at whatever speed it may be running

D. Load control--Adjusts the amount of load applied to engine to suit the speed at which it is set to run

VIII. Characteristics of mechanical and hydraulic governors

A. Mechanical

1. Has large dead bands

2. Power is small

3. Unavoidable speed droop

B. Hydraulic

1. Is not isochronous

2. Speed droop is not convenient to adjust

(NOTE: Speed droop must be applied and then withdrawn to become an isochronous hydraulic governor.)

INFORMATION SHEET

IX. Operation of governor on load increase (Transparency 8)

(NOTE: Engine speed decreases as load increases.)

A. Flyweights rotate slower

B. Speeder spring forces overcome centrifugal force of flyweights

C. Speeder rod moves down to open fuel valve to increase fuel

X. Operation of governor on load decrease (Transparency 8)

(NOTE: Engine speed increases as load decreases.)

A. Flyweights rotate faster

B. Speeder spring force is overcome by centrifugal force of flyweights

C. Speeder rod moves up forcing fuel valve to close

XI. Position of flyweights (Transparency 8)

A. Load increase--Flyweights move in

B. Load decrease--Flyweights move out

XII. Characteristics of an isochronous governor

A. Maintains constant speed without hunting

B. Speed droop is temporary

(NOTE: Speed droop is employed to give stability while fuel is being corrected and speed droop is removed as engine responds to fuel change.)

XIII. Characteristics of a limiting speed mechanical governor (Transparency 2)

A. Controls engine idle speed

B. Limits maximum operating speed

C. Can have single or double weights

Schematic of Governors

Load Decrease on Mechanical Governor

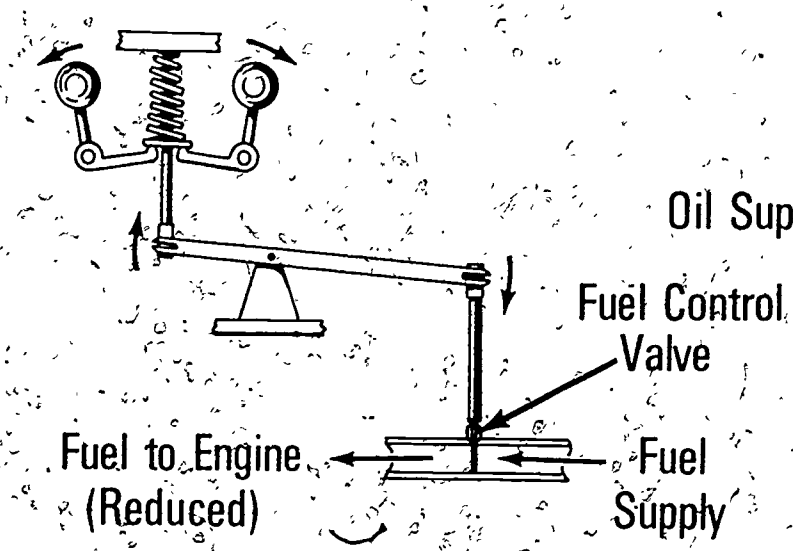

Hydraulic Governor

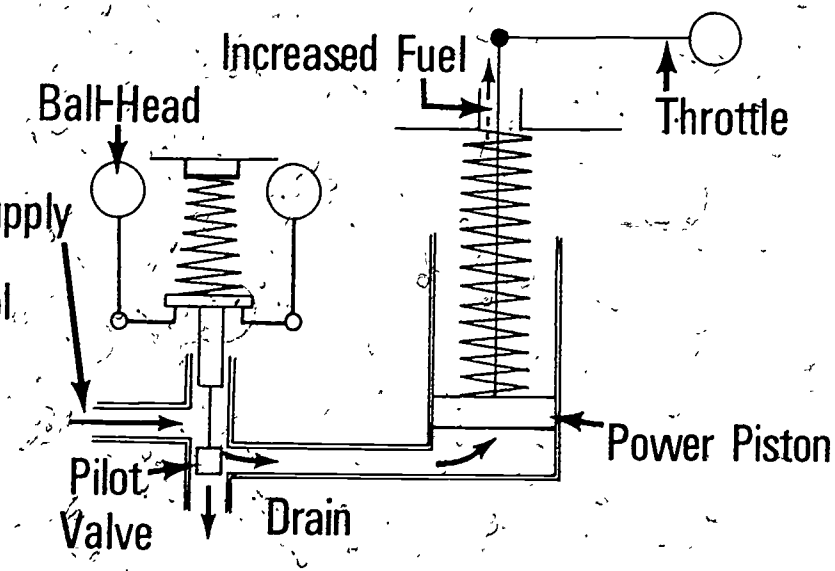

Limiting Speed Mechanical Governor

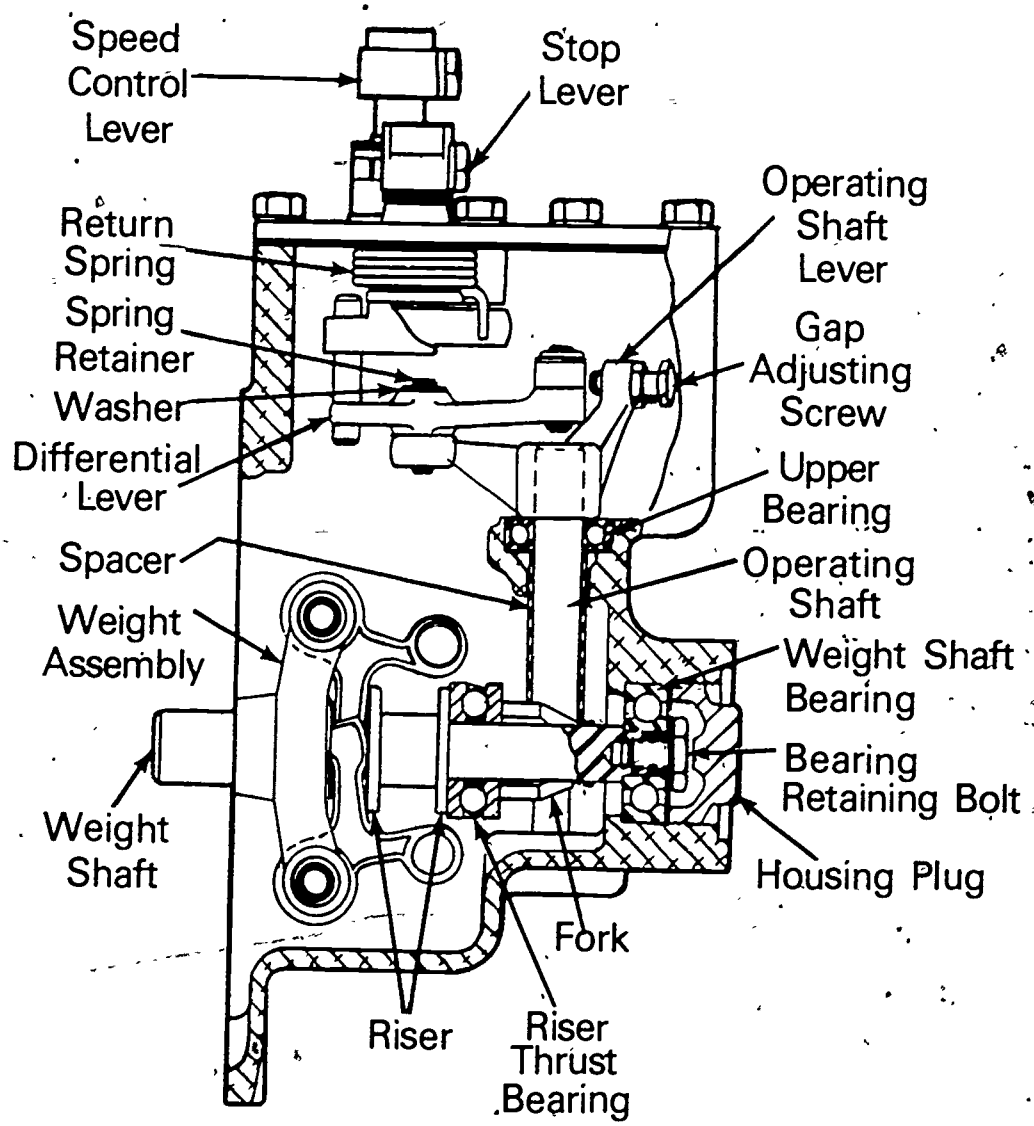

Cross–Section of Single Weight Limiting Speed Mechanical Governor

Variable Speed Mechanical Governor

Robert Bosch

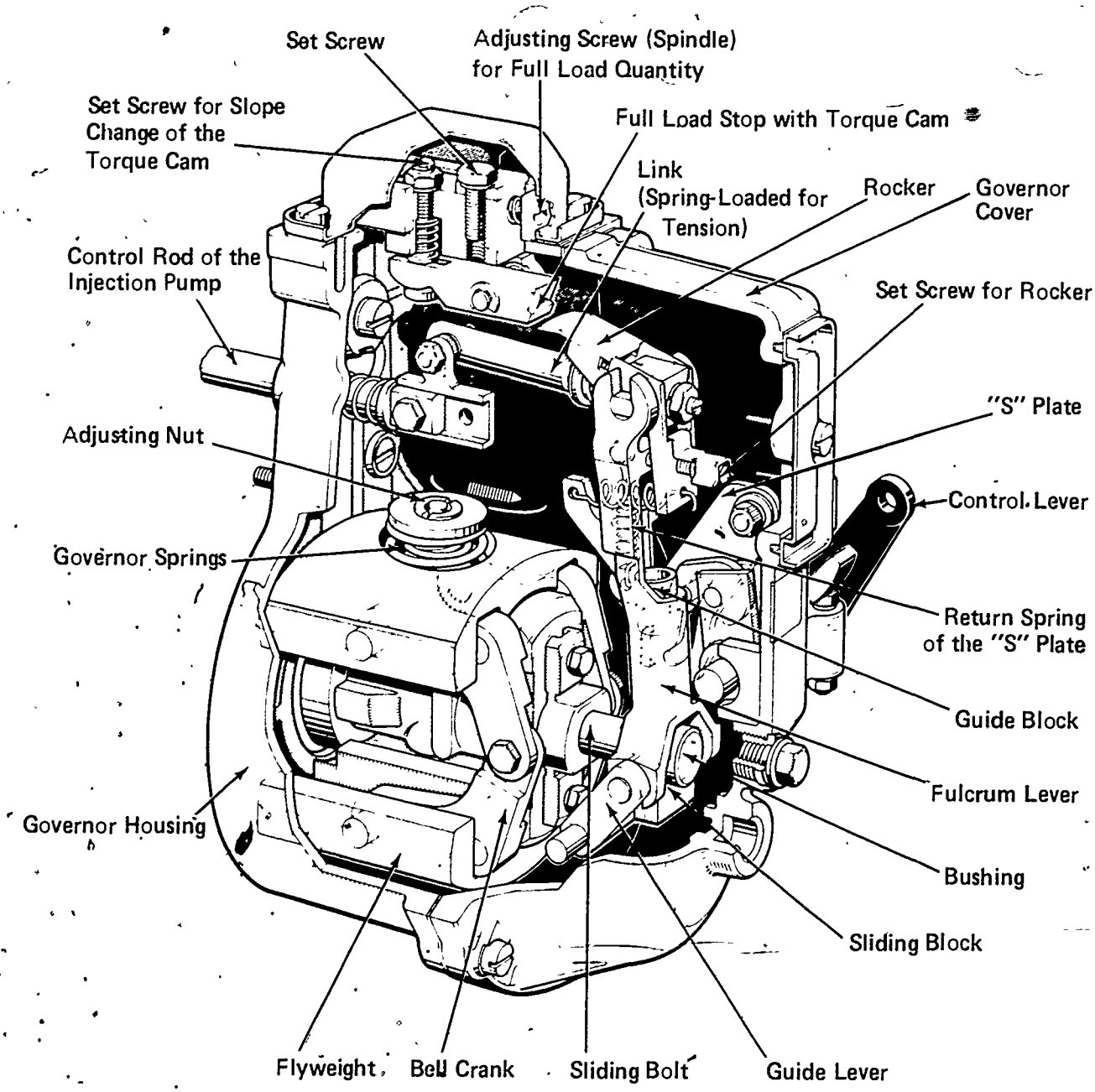

Courtesy of Robert Bosch

Operation of Variable Speed Mechanical Governor

Stages 1 and 2

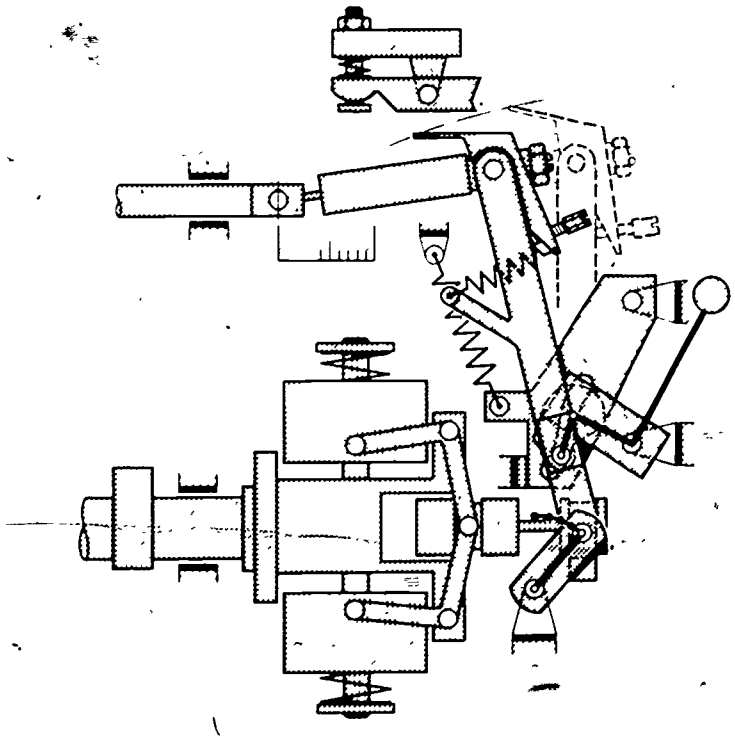

1. Start Position.

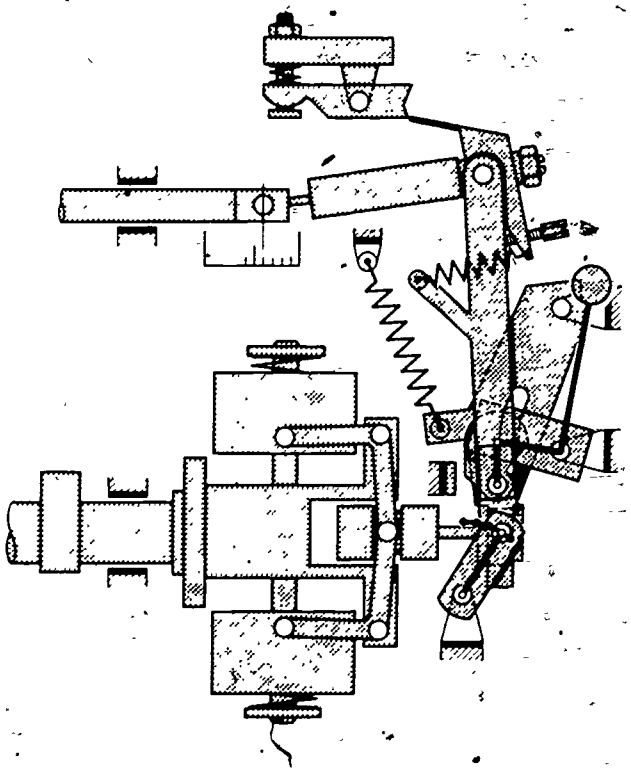

2. Full-Load Quantity at Low Revolutional Speed. Start of the Torque Control.

Courtesy of Robert Bosch

Operation of Variable Speed Mechanical Governor

Stages 3 and 4

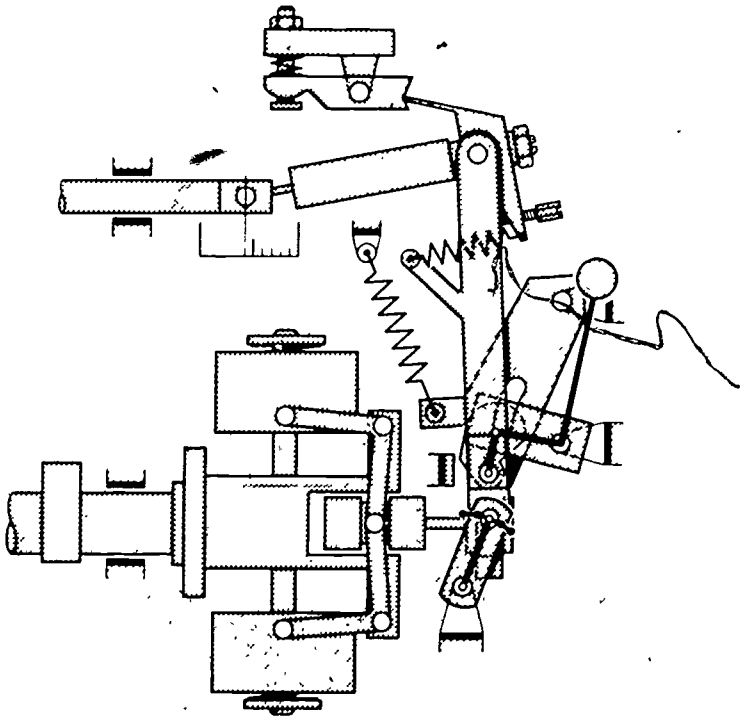

3. Full-Load Quantity at Moderate Speed. Reversal of Torque Control.

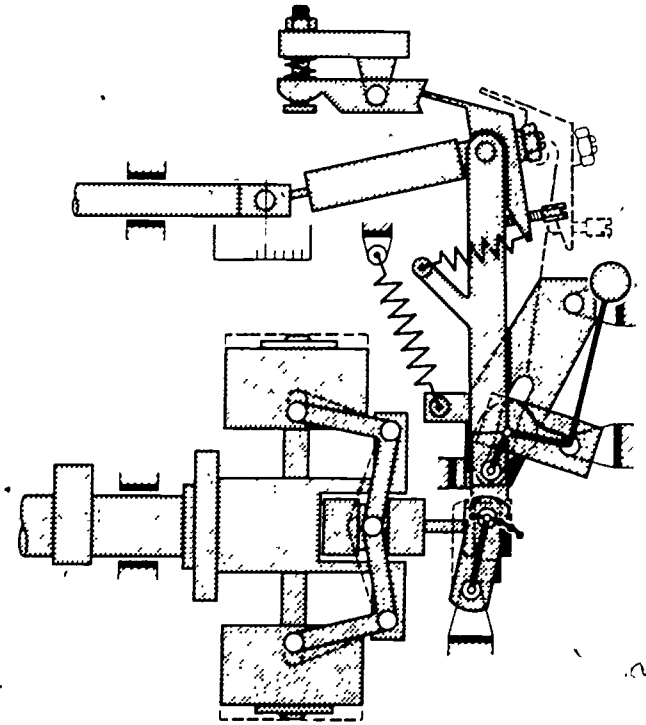

4. Maximum Full Load Rotation Speed. End of Torque Control (Dashed Lines=Break-Away).

Courtesy of Robert Bosch

TM

D:FS-291

Nonisochronous Governor

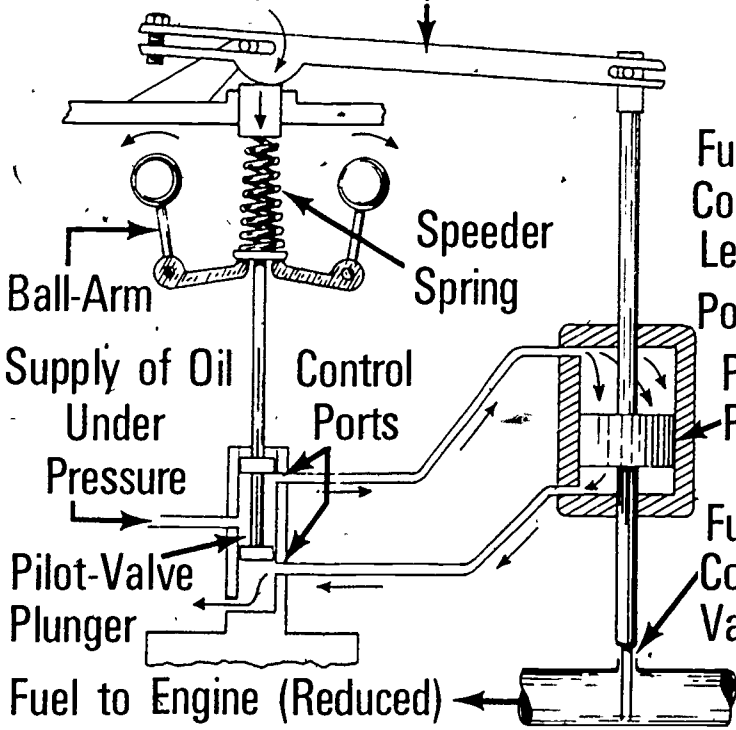

Effect of Load Decrease on Hydraulic Governor With Speed-Droop Lever

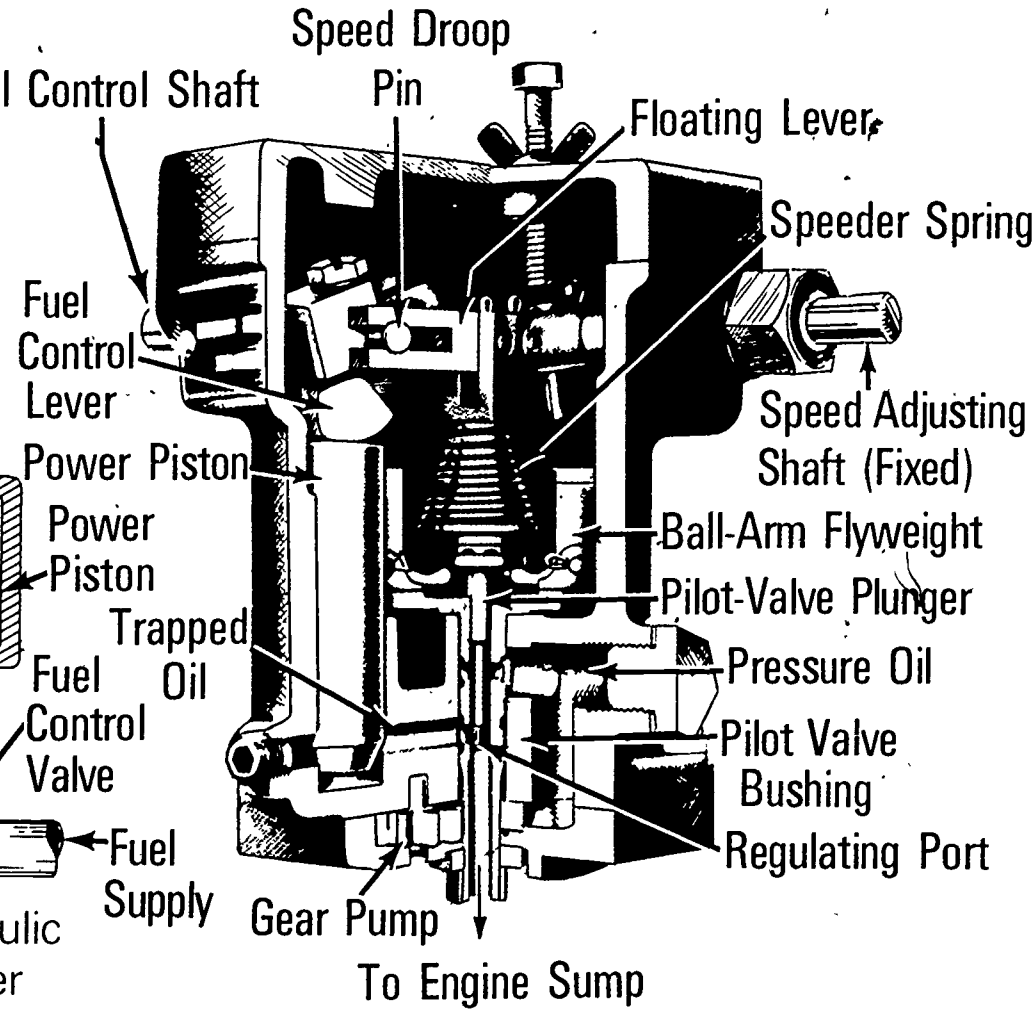

Isochronous Governor

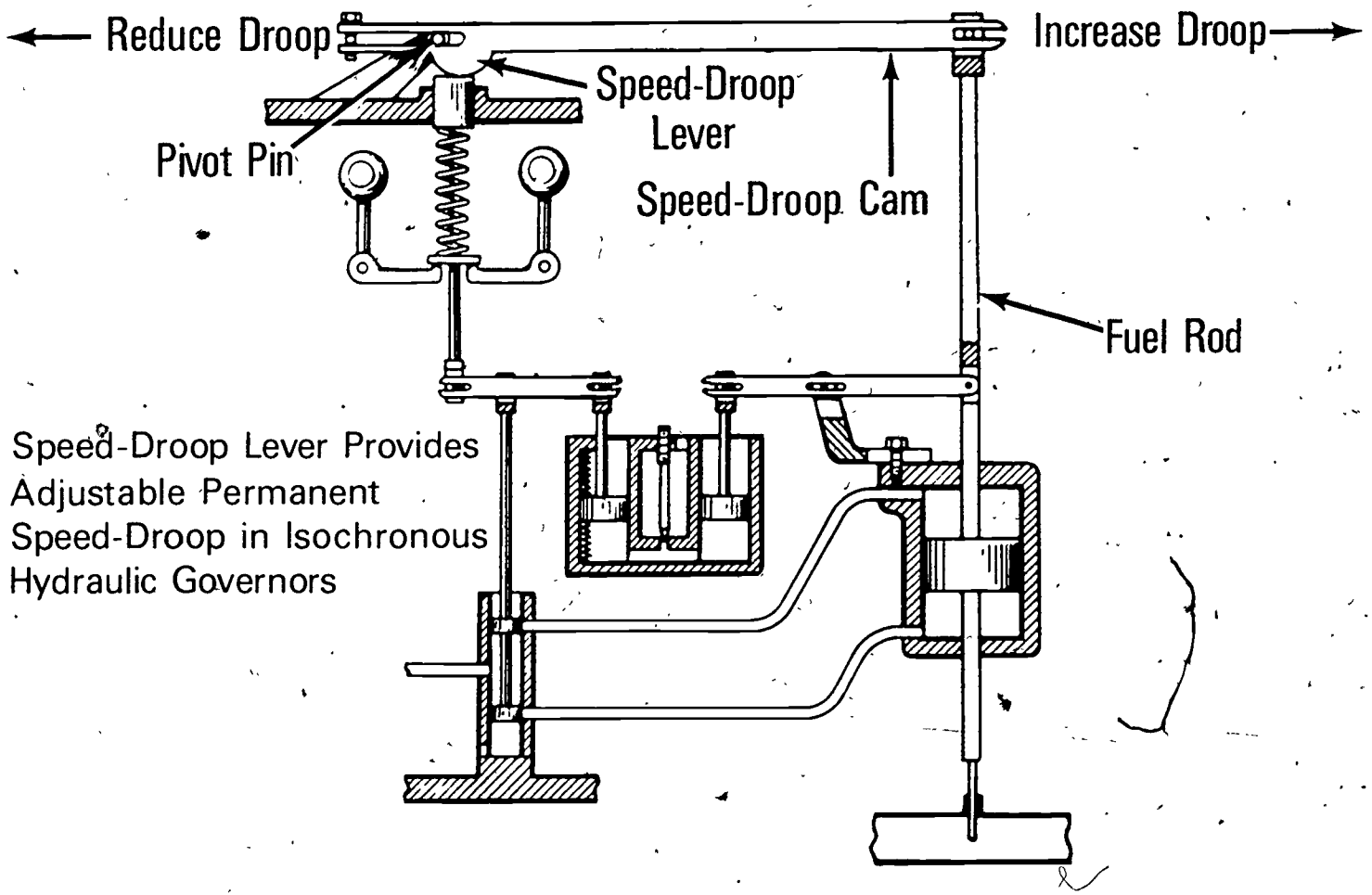

Governor Operation

Load Increases,
Engine Speed Decreases

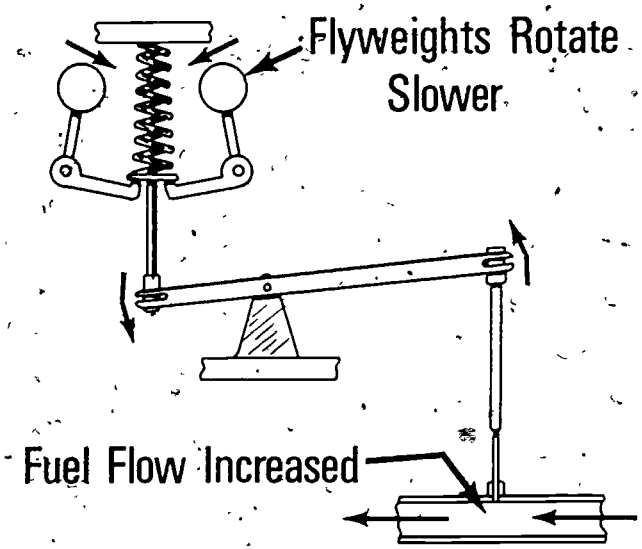

Increased Load

Load Decreases,
Engine Speed Increases

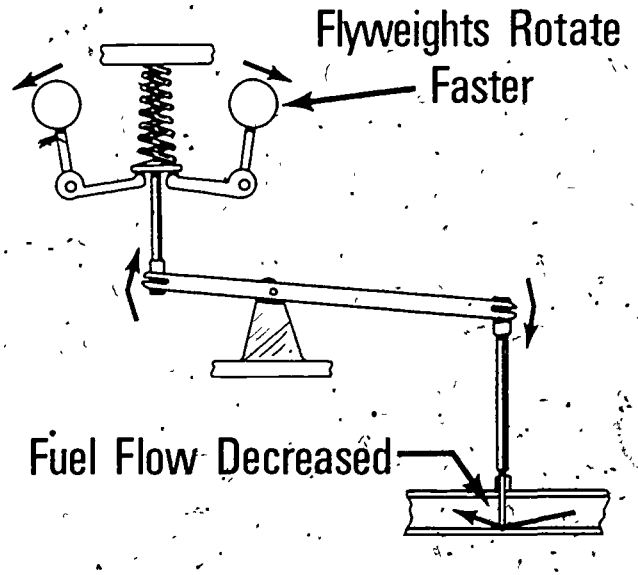

Decreased Load

Operation of Centrifugal Governor

GOVERNORS
UNIT VIII

JOB SHEET #1--ADJUST A LIMITING SPEED MECHANICAL GOVERNOR AND INJECTOR RACK CONTROL

I. Tools and materials

A. Basic hand tool set

B. Appropriate service manual

C. Clean shop towels

II. Procedure

(CAUTION: Follow all shop safety procedures.)

A. Adjust limiting speed mechanical governor and injector rack control

(NOTE: These procedures should be completed after adjusting the exhaust valves and timing the fuel injectors.)

1. Adjust governor gap--Single weight governor

a. Start engine and bring to operating temperature

b. Stop engine

c. Loosen the lever and disconnect the fuel modulator, the power control device, the load limiting device, or the air cylinder link, if the engine is so equipped

d. Remove the two attaching bolts

e. Withdraw the governor high speed spring retainer cover

JOB SHEET #1

f. Back out the buffer screw until it extends approximately 5/8" from the locknut (Figure 1)

FIGURE 1

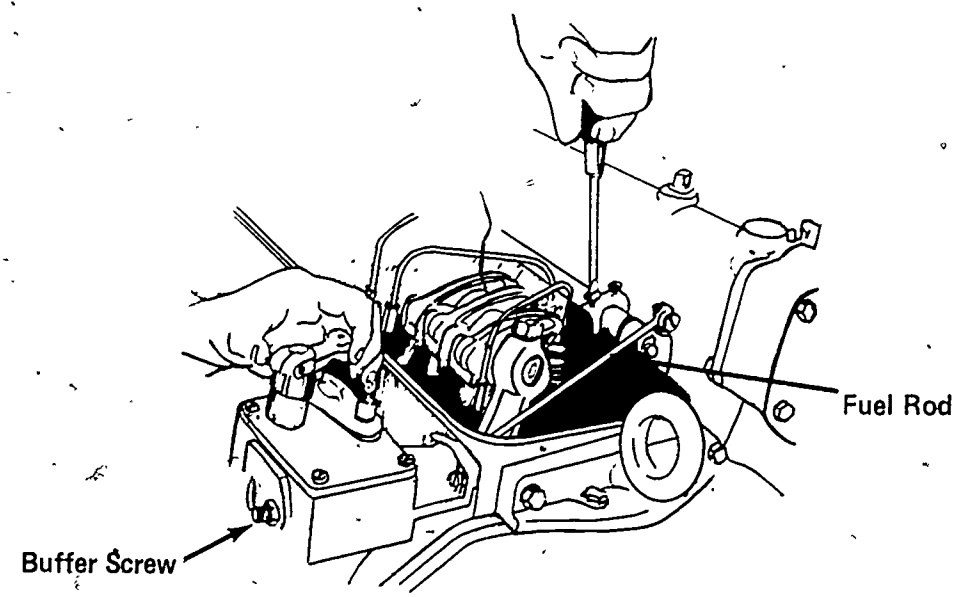

g. Start the engine

h. Loosen the idle speed adjusting screw locknut

i. Adjust the idle screw to obtain the desired idle speed

j. Hold the screw and tighten the locknut to retain the adjustment

(NOTE: The recommended idle speed is 550 rpm for single weight governors but may vary with special engine applications.)

k. Stop the engine

l. Remove the governor cover and lever assembly

m. Clean and remove the valve rocker cover

n. Remove the fuel rod from the differential lever and the injector control tube lever

JOB SHEET #1

o. Check the gap between the low speed spring cap and the high speed spring plunger with gauge (Figure 2)

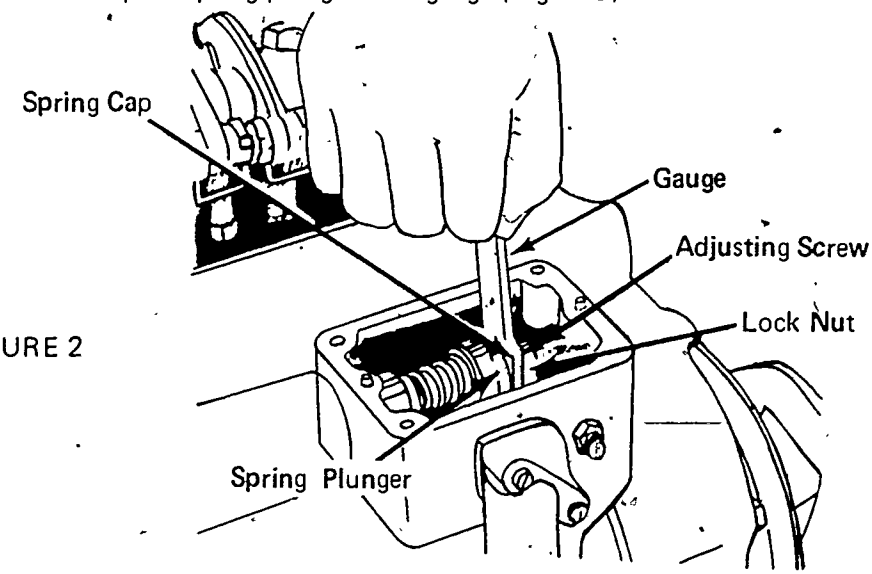

FIGURE 2

p. Loosen the locknut and turn the gap adjusting screw until a slight drag is felt on the gauge, if required

q. Hold the adjusting screw

r. Tighten the locknut

s. Recheck the gap and readjust if necessary

t. Install the fuel rod between the governor and injector control tube lever

u. Install the governor cover and lever assembly

2. Adjust governor gap on a double weight governor

a. Start engine

b. Bring to operating temperature

c. Stop engine

d. Remove the two attaching bolts

e. Withdraw the governor high speed spring retainer cover

f. Back out the buffer screw until it extends approximately 5/8" from the locknut (Figure 1)

g. Start the engine

JOB SHEET #1

h. Loosen the idle speed adjusting screw locknut (Figure 3)

FIGURE 3

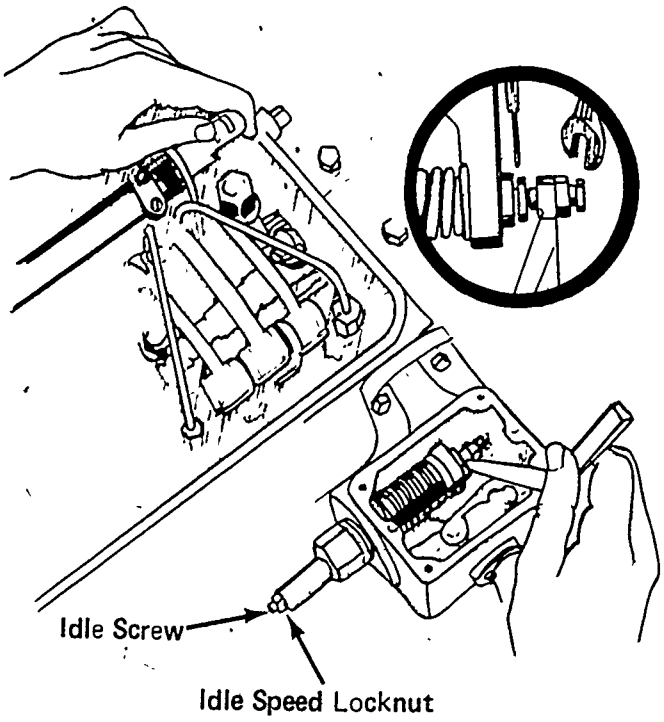

i. Adjust the screw to obtain the desired idle speed

j. Hold the screw and tighten the locknut to retain the adjustment

(NOTE: The recommended idle speed is 450 rpm for double weight governors, but may vary with special engine applications.)

k. Stop the engine

l. Remove the governor cover and lever assembly

m. Clean and remove the valve rocker cover

n. Remove the fuel rod from the differential lever and the injector control tube lever

o. Start and run the engine between 800 and 1000 rpm by manual operation of the control tube lever

(CAUTION: Do not overspeed the engine.)

JOB SHEET #1

p. Check the gap between the low speed spring cap and the high speed plunger with a .0015" feeler gauge (Figure 3)

(NOTE: If the gap setting is incorrect, loosen the locknut and adjust the gap adjusting screw.)

q. Hold the gap adjusting screw

r. Tighten the locknut

s. Recheck the governor gap

t. Stop the engine

u. Install the fuel rod between the differential lever and the control tube lever

v. Install the governor cover and lever assembly

B. Position injector rack control levers

1. Disconnect any linkage attached to the governor speed control lever

2. Loosen the idle speed adjusting screw locknut

3. Back out the idle speed adjusting screw until 1/2" of the threads project from the locknut when the nut is against the high speed plunger

4. Loosen all of the inner and outer injector rack control lever adjusting screws

(NOTE: On engines equipped with a yield link type fuel rod, attach a small "C" clamp at the shoulder of the rod to prevent the yield spring from compressing while adjusting the injector rack control levers.)

5. Move the governor speed control lever to the full-fuel position

6. Hold the lever in that position with a light finger pressure

7. Turn the inner adjusting screw on the no. 1 injector rack control lever down until a slight movement of the control tube is observed or a step up in effort is noted

(NOTE: This will place the no. 1 injector rack in the full-fuel position.)

8. Turn the outer adjusting screw down until it bottoms lightly on the injector control tube

GOVERNORS
UNIT VIII

NAME_____

TEST

1. Match the terms on the right with their correct definitions.

_____a. Device that controls engine speed automatically by varying fuel supply	1. Speed drift
_____b. Gradual deviation of the governed speed above or below the desired speed	2. Governor
_____c. Change in governor rotating speed which causes the governor's fuel control rod to move from full-closed to full-open throttle position or vice versa	3. Isochronous
_____d. Change in speed the engine must make before the governor will make a corrective movement of the throttle	4. Hunting
_____e. Oscillations in speed due to over-correction by governor	5. Servomotor
_____f. Piston moved by fluid under pressure	6. Dead band
_____g. Holds engine speed within 1% of rated load rpm; eliminates speed droop	7. Speed droop
_____h. Centrifugal ball head moving in a circular path	8. Flyweights

2. List three purposes of a governor.

   a. _____

   b. _____

   c. _____

3. Name two basic types of governors using flyweights.

   a. _____

   b. _____

4. Distinguish between a mechanical governor and a hydraulic governor.

_____

_____

5. Name two types of mechanical governors.

   a. _____

   b. _____

6. Name two types of hydraulic governors.

   a. _____

   b. _____

7. Match the kinds of governors on the right with their special functions.

_____a. Maintains any selected engine speed	1. Over-speed
_____b. A safety device which shuts down the engine in case it runs too fast	2. Load control
_____c. Limits the load to prevent overloading the engine at whatever speed it may be running	3. Load limiting
_____d. Adjusts the amount of load applied to engine to suit the speed at which it is set to run	4. Variable speed

8. Match the types of governors on the right with their characteristics.

_____a. Has large dead bands	1. Mechanical
_____b. Speed droop is not convenient to adjust	2. Hydraulic
_____c. Unavoidable speed droop	
_____d. Is not isochronous	
_____e. Power is small	

9. Select true statements concerning the operation of the governor on load increase by placing an "X" in the appropriate blanks.

   _____a. Flyweights rotate faster

   _____b. Speeder spring forces overcome centrifugal force of flyweights

   _____c. Speeder rod moves down to open fuel valve to increase fuel

10. Complete the following list of statements concerning the operation of the governor on load decrease.

   a. Flyweights rotate _____

   b. Speeder spring force is overcome by centrifugal force of flyweights

   c. Speeder rod moves up forcing _____

11. Identify the position of flyweights for load increase or decrease by writing Figure 1 or Figure 2 in the appropriate blanks.

_____a. Load increase

_____b. Load decrease

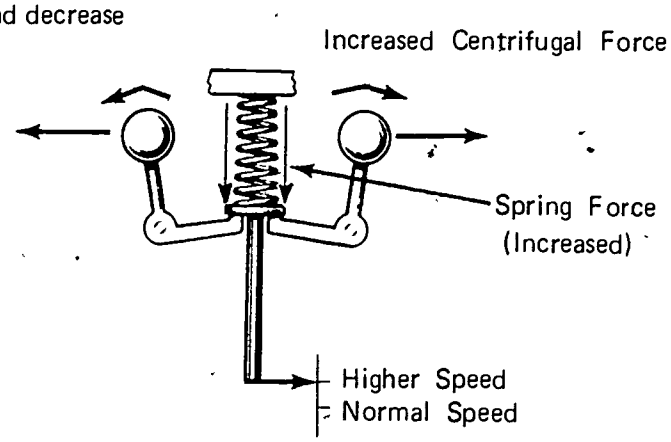

FIGURE 1

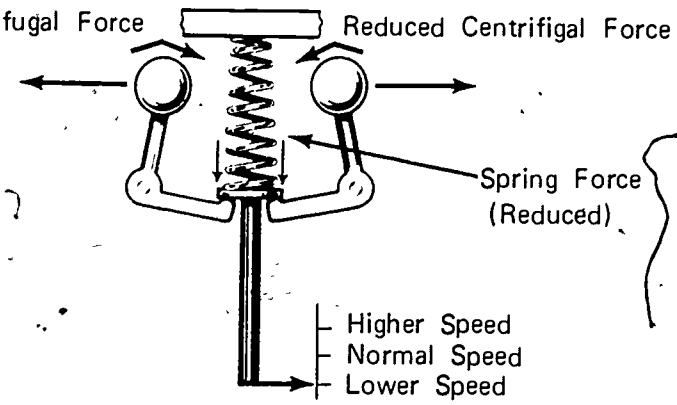

FIGURE 2

12. Complete the following list of characterisitics of an isochronous governor.

a. Maintains constant speed without hunting

b. _____

13. Select true statements concerning characteristics of a limiting speed mechanical governor.

_____a. Controls engine idle speed

_____b. Limits maximum operating speed

_____c. Can have 8 or 10 weights

14. Demonstrate the ability to adjust a limiting speed mechanical governor and injector rack control.

(NOTE: If this activity has not been accomplished prior to the test, ask your instructor when it should be completed.)

GOVERNORS
UNIT VIII

ANSWERS TO TEST

1. a. 2 e. 4
   b. 1 f. 5
   c. 7 g. 3
   d. 6 h. 8

2. a. Maintains a selected speed
   b. Limits the slow and fast speed
   c. Shuts down engine when it over-speeds

3. a. Mechanical
   b. Hydraulic

4. Mechanical governor uses mechanical linkage and hydraulic governor uses hydraulic power to change engine fuel control

5. a. Limiting speed
   b. Variable speed

6. a. Permanent speed droop
   b. Temporary speed droop

7. a. 4
   b. 1
   c. 3
   d. 2

8. a. 1 d. 2
   b. 2 e. 1
   c. 1

9. b, c

10. a. Faster
    c. Fuel valve to close

11. a. Figure 2
    b. Figure 1

12. b. Speed droop is temporary

13. a, b

14. Performance skills evaluated to the satisfaction of the instructor