DOCUMENT RESUME

ED 219 529 CE 033 142

AUTHOR Blanton, William
TITLE Microwave. Instructor's Edition. Louisiana Vocational-Technical Education.
INSTITUTION Louisiana State Dept. of Education, Baton Rouge. Div. of Vocational Education.; Louisiana State Vocational Curriculum Development and Research Center, Natchitoches.
PUB DATE 79
NOTE 191p.
AVAILABLE FROM Vocational Curriculum Development and Research Center, P.O. Box 1159, Natchitoches, LA 71457 ($10.00)..

EDRS PRICE MF01/PC08 Plus Postage.
DESCRIPTORS Behavioral Objectives; Citations (References); Educational Resources; *Electronic Equipment; *Electronics; *Job Skills; *Learning Activities; Occupational Tests; Postsecondary Education; State Curriculum Guides; Technical Education; *Telecommunications; Vocational Education
IDENTIFIERS Louisiana; *Microwave Technology

ABSTRACT

This publication contains related study assignments and job sheets for a course in microwave technology. The course is organized into 12 units covering the following topics: introduction to microwave, microwave systems, microwave oscillators, microwave modulators, microwave transmission lines, transmission lines, detectors and mixers, microwave antennas, Smith Chart, microwave receivers, microwave transmission path calculations, and multiplex. Each related study assignment consists of student objectives, introduction to the topic, references, and study questions. Job sheets contain an objective; job information; tools, materials, and equipment needed; references; precautions; procedure for doing the job; and job questions. Line drawings are provided for these materials. This instructor's edition also contains tests for each unit and answers to the study questions. (KC)

LOUISIANA VOCATIONAL-TECHNICAL EDUCATION

MICROWAVE

Instructor's Edition

William Blanton

1979

Published By

STATE OF LOUISIANA
VOCATIONAL CURRICULUM DEVELOPMENT
AND RESEARCH CENTER
P. O. Box 657
Natchitoches, Louisiana 71457

in cooperation with

TRADE AND INDUSTRIAL EDUCATION SECTION
DIVISION OF VOCATIONAL EDUCATION
STATE DEPARTMENT OF EDUCATION
P. O. Box 44064
Baton Rouge, Louisiana 70804

This publication was developed by the Vocational Curriculum Development and Research Center of Natchitoches, Louisiana, pursuant to a contract with the Research Coordinating Unit, Louisiana State Department of Education under Program Improvement and Supportive Services monies.

"This public document was published at a cost of $10 per copy by the Vocational Curriculum Development and Research Center for Louisiana Vocational-Technical Education Programs under authority of Act 355 of 1974. This material was printed in accordance with the standards for printing by state agencies established pursuant to R.S. 43:31."

Table Of Contents

MICROWAVE

Required Textbooks

MICROWAVE

Title	Source
Robert L. Shrader ELECTRONIC COMMUNICATIONS 3rd. Ed.	Gregg/McGraw-Hill Book Co. Manchester Road Manchester, MO 63011
George Kennedy ELECTRONIC COMMUNICATIONS SYSTEMS 2nd Ed.	Gregg/McGraw-Hill Book Co. Manchester Road Manchester, MO 63011
John D. Kraus ANTENNAS 1950 Ed.	Gregg/McGraw-Hill Book Co. Manchester Road Manchester, MO 63011
Richard K. Moore TRAVELING WAVE ENGINEERING 1960 Ed.	Gregg/McGraw-Hill Book Co. Manchester Road Manchester, MO 63011
Harold E. Ennes AM/FM BROADCASTING: EQUIPMENT, OPERATIONS AND MAINTENENCE 1st Ed.	Howard W. Sams Publishing Co. Bobbs-Merrill Publishing 4300 West 62nd Street Indianapolis, Indiana 46206

Related Study Assignment No. 1: Introduction to Microwaves

Objective:

Upon completion of this assignment, the student will be able to: (1) list the microwave frequency spectrum in megahertz or gigahertz and list the wavelength of each band in centimeters, (2) write a list of safety precautions to be observed while working with microwave equipment, (3) describe briefly to the instructor the modern uses of microwaves, and (4) successfully pass a written examination with a score of 75 or more.

Introduction:

This R.S.A. will introduce to the communications student a section of the radio frequency spectrum known as the microwave region.

Microwaves have existed since the early beginnings of radio but were really developed to a high degree during World War II. Probably the greatest use of that time was radar, a series of directional, high-powered bursts of energy that are transmitted, travel to a distant object, bounce off this object, and return to the waiting receiver as useful data. Since its early use by the military forces, microwave technology has advanced rather rapidly and today highly sophisticated networks of microwave relay stations carry data to every corner of our nation.

Modern day uses of microwave energy include the transmission of television programs, telephone messages, telemetry data, satellite data, and space capsule communications. Even microwave ovens prepare food in our homes.

One characteristic of microwaves is that the wavelength is such that electrical circuits may be built whose physical dimensions are near the operating wavelength. Another characteristic of microwave circuits is that the location or position of elements within the circuit becomes critical. Voltages and currents may be different values in relation to the relative position of components (i. e. a conductor 3 centimeters long carrying energy in the 3 cm microwave band will have two voltage maximums and two voltage minimums and the maximum-to-minimum spacing will be one quarter wavelength).

As a matter of further explanation, resistance, capacitance, and inductance are uniformly distributed over the entire length of a transmission line and if the path is large in relation to the wavelength, the voltage (and current) will vary from zero to maximum many times

Introduction: Continued

along the line. Figure 1a depicts a line with its distributed resistance, capacitance and inductance. Figure 1b shows how voltage (and current) may vary along the length of the line. Unlike DC or low frequency AC, propagation of microwave energy along a line is dependent on electric and magnetic fields. This will be covered in the R.S.A. on transmission lines.

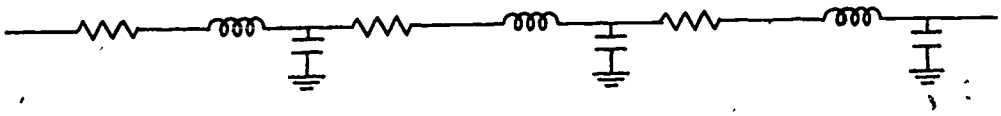

Fig. 1a
Distribution of Resistance, Capacitance, and Inductance along a Transmission Line

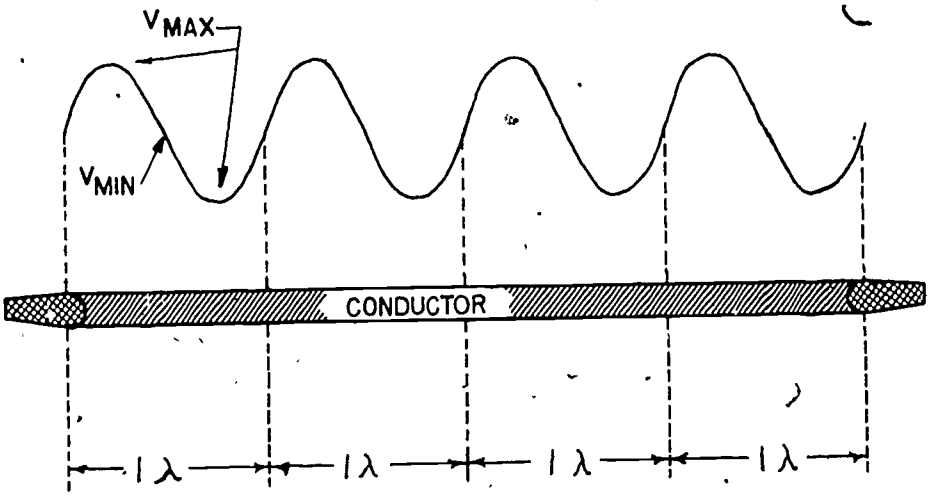

Fig. 1b
Voltage (or Current) Distribution along a Conductor at Microwave Frequencies

The student should be aware of some safety precautions when working in the proximity of microwave equipment. First, stand away from the open end of waveguides (a special microwave transmission line). Energy that is radiated from an open-ended waveguide may "cook" a person in the same manner that is used in a microwave oven to prepare food. This energy penetrates food and produces heat internally as well as on the surface. This heat, unlike the radiant heat of a conventional

Introduction: Continued

oven, is produced by molecular friction or agitation of molecules due to the rapid reversal of current flow. Some deaths have occurred, although rarely, by "cooking" the victim through carelessness or ignorance while working on or near microwave sources such as radar transmitters.

Second, be sure all shields on circuits are in their proper places. This reduces radiation and covers terminals that are connected to dangerous potentials. Microwave power supplies may contain lethal voltages and should be treated with the same respect as given to other sources of power.

Some new terms will be encountered in the study of microwaves. The student should familiarize himself with these to better understand microwave theory and applications.

Waveguide--A hollow metal conductor of microwave energy.

Parabolic Antenna--A dish-shaped antenna used to focus microwave energy into a narrow beam.

Horn Antenna--A device that is flared like a funnel or megaphone and is attached to a transmission line to radiate directional microwave energy.

Mode--A pattern of electromagnetic waves along a transmission line or within a cavity.

Klystron--A special vacuum tube that contains a tuned cavity in addition to other electrodes.

Magnetron--A high powered, multi-cavity tube principally used in radar.

Cutoff Frequency--The frequency of the dominant mode of a rectangular waveguide whose wavelength is twice the widest dimension of the waveguide.

Transverse Electric Wave--An electromagnetic wave in a rectangular waveguide known as the TE_{10} mode. This wave has an electric field vector that is perpendicular to the direction of propagation.

References:

1. Robert L. Shrader, ELECTRONIC COMMUNICATIONS, 3rd Ed., Gregg/McGraw-Hill Book Co. Read pages 638--655.

2. Harold E. Ennes, AM/FM BROADCASTING: EQUIPMENT, OPERATIONS, AND MAINTENANCE, 1st Ed., Howard W. Sams Publishing Co. Read pages 344--355.

Study Questions:

1. What are some modern uses of microwaves?

2. What are the frequencies and wavelengths of L, S, J, X, and P band microwaves?

3. What are some safety precautions you must observe?

4. What types of transmission lines are used for microwave frequencies?

5. What safety precautions should be observed with or around microwave equipment?

Job: Plotting Microwave Frequencies

Objective:

The student will: (1) Draw a graph depicting the various microwave frequencies and (2) identify the various microwave bands by the proper letter designation and give the wavelength in centimeters and inches for each band.

Job Information:

The student should familiarize himself with the metric system of measurement if he has not already done so. A meter is approximately 39.4 inches which is slightly longer than a yardstick. It is divided into measurements using 10 as a base. One tenth of a meter is a decimeter, one one-hundreth is a centimeter, and one one-thousandth of a meter is a millimeter.

Most microwave wavelengths are identified in centimeters (cm). These wavelengths may be calculated using the formula 300 ÷ frequency in megahertz times 100 ($Fcm = \frac{300}{FMHz} \times 100$).

Tools, Materials, and Equipment:

1. Graph paper
2. Ruler
3. Pencil

References:

1. R.S.A. 1 of Microwave and ELECTRONIC COMMUNICATIONS.

Procedure:

1. Draw a graph showing the microwave frequency spectrum. Use the frequency as the horizontal direction (axis) and wavelength in centimeters as the vertical axis.
2. Identify the various bands with their proper letter designation L, G, M, etc.).

Job Questions:

1. How did you calculate the wavelength (in centimeters) for the various microwave bands?

2. How would you write 2.15 gigahertz in Hertz per second?

Job Questions: Continued

3. How would you write 7.152 gigahertz in megahertz per second?

4. How would you write 7.152 gigahertz in thousandths of megahertz per second?

Related Study Assignment No. 2: Microwave Systems

Objective:

Upon completion of this assignment the student will be able to:
(1) Identify the various sections that comprise a microwave system,
(2) state the purpose of each section of a microwave section, and
(3) pass a written examination on microwave systems with a grade of 75 or more.

Introduction:

A typical microwave system contains several circuits or devices that perform different functions to transmit and receive data (Fig. 1). Most of these circuit names are familiar to the communications student but some of the devices work differently from those encountered previously. This study shall encompass the purpose and function of each major section of the overall system.

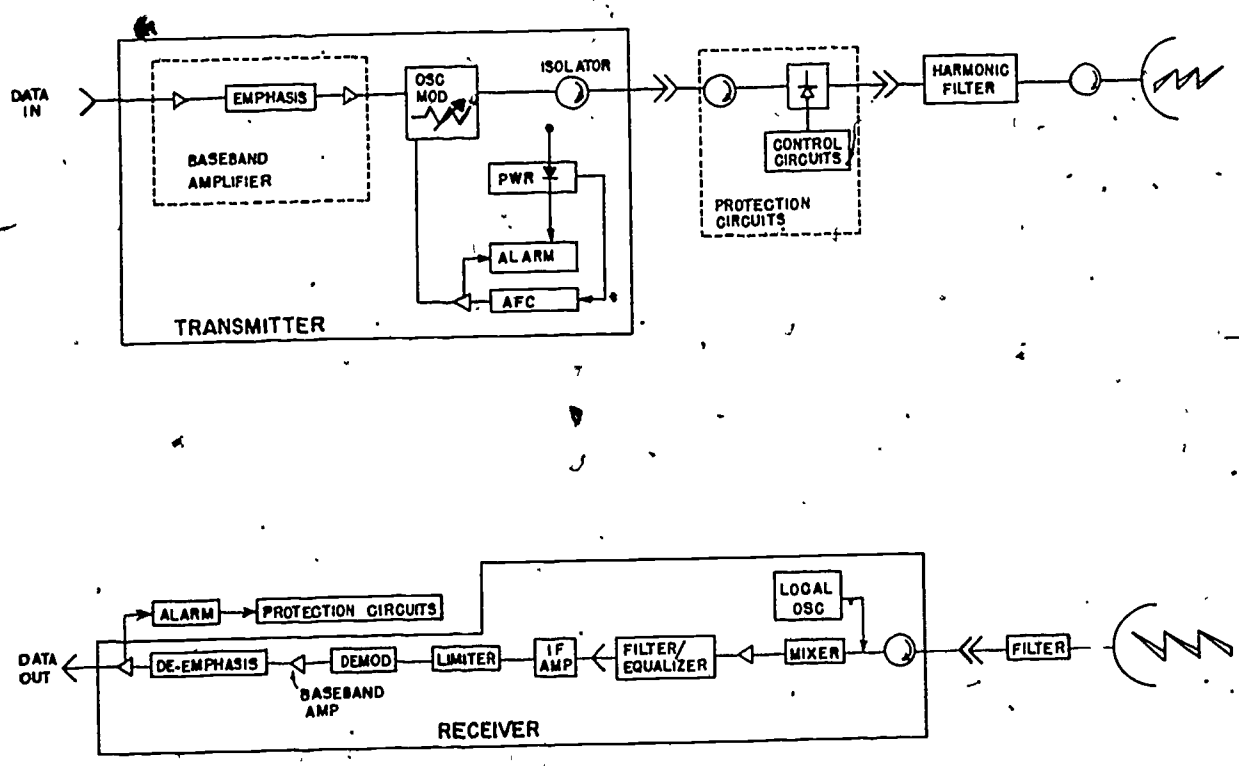

Fig. 1
Block Diagram of Typical Microwave System

Introduction: Continued

Microwave Oscillator

Microwave oscillators are generators of ultra-high, super-high, and extremely-high frequencies. They may be special vacuum tubes or more recently, solid state devices. The theory of how these units operate electrically will be covered in a later lesson.

Some microwave oscillators are: (1) The klystron, (2) the magnetron, (3) the traveling wave tube, (4) the backwave oscillator, and (5) solid state devices such as transistors, tunnel diodes, Gunn diodes, and limited space-charge accumulation diodes.

Modulator

The modulator and its associated baseband amplifier is employed in the microwave transmitter to impress data onto the microwave carrier. It consists of several subassemblies including variable pads for level adjustments, a differential amplifier, driver, and output. Optional accessories are also available.

Since most carriers are frequency modulated, preemphasis of the modulating signal is employed to improve the transmission characteristics of the signal. Deemphasis is employed at the receiver to restore the signal to its original state.

Multiplex equipment (MUX) with several channels of data may be fed into the baseband amplifier. The number of channels that the baseband amplifier will accept depends on the data levels that are used.

Power Supplies

Vacuum tube microwave circuits utilize conventional power supplies ranging from highly negative potentials to high positive voltages. Solid state units employ power supplies of the type found in transistor operated equipment. Many systems contain two or more sources of power to maintain the most reliable communications possible.

Commercial power is a primary source of voltage with a storage battery and trickle charger arrangement as a secondary source. In some remote locations or in areas of high current demands, an auxiliary diesel powered generator may also be installed. Some method of remote or automatic switching of these power sources must be included in the station circuitry.

Transmission Lines

Microwave transmission lines generally differ from conventional lines to the extent that a wire conductor is no longer necessary. It may be said the microwave signal can be propagated along the inside of a hollow metallic pipe called a waveguide. Some systems still employ low-loss coaxial lines.

Introduction: Continued

Transmission Lines Continued

Waveguides are lines that suffer no radiation loss as do conventional or coaxial lines. Long runs are usually avoided, particularly horizontal runs, as moisture may accumulate inside the waveguide and cause an increase in signal attenuation. Dry air or dry nitrogen under pressure may be added to prevent this accumulation.

Antennas

The transmitting and receiving antennas found in operating microwave systems are very directional, of distinctive shape, and usually have very high power gain due to the extremely narrow beam widths. The simplest type of antenna commonly employed is the horn antenna. It consists of a connecting flange (for attaching to a waveguide) and a funnel shaped body. Energy is propagated in the direction that the horn is aimed.

The most popular style of microwave antenna is the parabolic "dish." The characteristics of this device are: (1) Extremely high gain (20,000 to 40,000 is common), (2) narrow beam width, and (3) high directivity. Since these dishes are exposed to the elements, weatherproofing is accomplished by fitting a special cover on the antenna called a "radome."

The radiated signal travels through a waveguide and buttonhook (or sometimes a dipole) arrangement to the dish and is reflected outward into space in the direction that the dish is aimed. In the receiving mode, the action is reversed. Most dishes are bolted to supporting structures and attached to rigid waveguides by flexible waveguide sections to allow for mechanical discontinuities, vibrations, etc.

Receivers

Microwave receivers are usually conventional superheterodynes using a reflex klystron (or suitable solid state device) as the local oscillator. The IF amplifiers, second mixer, detector, audio (or video) amplifiers, and output stages are of the same design as those studied in previous courses.

Overall systems work only as well as they are designed, installed, and maintained. Quality equipment performing various duties is available from several reputable manufacturers. Industry has need of competent technical staffs to maintain these vital communication links. The serious student will do well to glean each bit of information that may help him to insure himself of a successful career in microwave communications.

References:

1. Robert L. Shrader, ELECTRONIC COMMUNICATIONS, 3rd Ed., Gregg/McGraw-Hill Book Co. Read pages 638--655

2. Harold E. Ennes, AM/FM BROADCASTING: EQUIPMENT, OPERATIONS, AND MAINTENANCE, 1st Ed., Howard W. Sams Publishing Co. Read pages 344--355.

3. George Kennedy, ELECTRONIC COMMUNICATIONS SYSTEMS, 2nd Ed., Gregg/McGraw-Hill Book Co. Read pages 428, 429, and 534--537.

Study Questions:

1. What are the functions of the various major sections of a microwave system?

2. Define the word "parabola."

3. What is preemphasis?

4. Draw a block diagram of a microwave system.

Job: Training Kit Familiarization

Objective:

The student will: (1) Identify the various components that are contained in the trainer and (2) attach the various components of the trainer.

Job Information:

In this job the student will examine the components of the trainer to be used in the microwave course of studies.

Ask your instructor for the trainer and the instruction book that comes with the trainer.

Tools, Materials, and Equipment:

1. Microwave training kit with instruction book

   A list of components that should be in the trainer is as follows:

   Horn antenna
   Terminations
   Wavemeter (frequency meter)
   Waveguide flap attenuator
   Modulator unit
   Slotted line section
   Bends
   Twists
   Crystal detectors
   Slide tuner
   Standing wave unit or indicator
   Diode switches
   Dish antenna
   Directional couplers
   Klystron or solid state oscillator
   Power supplies
   Cables

2. Hand tools

References:

1. Training kit instruction book.

MICROWAVE

Precautions:

1. Handle the components carefully. Do not dent or bend the waveguide sections.

Procedure:

1. Open the kit and carefully unpack the components of the kit.
2. Identify each component by looking at the parts list.
3. Make sure the kit is complete. If parts are missing, notify your instructor immediately.
4. Study the method used to join the components together.
5. Attach several units to each other. Be sure the waveguide sections are oriented with the narrow dimensions in the same plane. Do not overtighten connections.
6. Disassemble components.
7. Repack the components into their proper places in the storage container.

Job Questions:

1. How are the components joined together?

2. Why is it important to join the waveguide sections together in the proper plane?

Job: Microwave Systems--Section Identification

Objective:

The student will: (1) Identify each major section of an operating microwave system and (2) explain the function of each major section of an operating microwave system.

Job Information:

The student should study and be thoroughly familiar with the block diagram of the microwave transmitter and receiver in the related study assignment.

Tools, Materials, and Equipment:

1. Pencil
2. Paper

References:

1. R.S.A. 2 of Microwave.

Procedure:

1. Draw a block diagram of a microwave transmitter including the transmission line and antenna.
2. Draw a block diagram of a microwave transmitter including the transmission line and antenna.
3. Write a brief description of each section of the microwave transmitter and receiver.

Study Questions:

1. In what subassembly of the microwave transmitter is the deviation control located?

2. What type of modulation is usually used in microwave transmitters?

3. What is the purpose of the preemphasis and deemphasis circuits in microwave systems?

Related Study Assignment No. 3: Microwave Oscillators

Objective:

Upon completion of this assignment, the student will be able to: (1) Identify the various microwave devices and explain their operation and (2) pass a written examination with a score of 75% or better.

Introduction:

Most microwave signals originate in special electronic devices. These devices will be studied in this assignment.

Previous oscillator studies have covered various circuitry including frequency multiplication. Microwave carriers may be generated using conventional oscillator circuits and frequency multipliers. This is usually done at the lower microwave frequencies such as 960 MHz. However, these frequency multipliers require additional space, generate unwanted heat, add to power consumption, and increase equipment costs.

Several devices are now in use that can generate microwave signals without using frequency multipliers. The reflex klystron has been a popular vacuum tube microwave oscillator for several decades. Many existing systems still use the klystron both in the transmitter and the receiver to produce radio frequencies.

Gunn diodes and other solid state devices are rapidly replacing vacuum tubes as the heart of the microwave system. As in other solid state circuits, they require less power and generate less heat.

A logical approach to the sutdy of microwave generation is to look first at resonant cavities (Fig. 1). Figure 2 depicts a hairpin loop. This loop is self-resonant since it contains some inductance and capacitance. It is easily seen that length and width will change the resonant frequency of the loop since these two dimensions will alter the inductance and the capacity of the loop.

If the loop is made one-quarter wavelength long, it becomes a low impedance (a short circuit) at the closed end and a high impedance (an open circuit) at the open end. By connecting an infinite number of these loops (commonly referred to as stubs) to a central point with the open ends at the center and the shorted end on the outside, a hollow cavity similar to a tuna can is formed. This cavity, since it contains inductance and capacitance, is resonant at a frequency determined by the internal dimensions (Fig. 3). The principle of the quarter wave shorted stub also makes possible the manufacture of a special transmission line called a waveguide.

Introduction: Continued

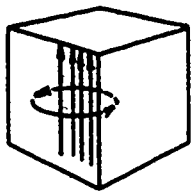

Cube (Q = 28,000)

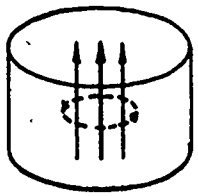

Cylinder (Q = 31,000)

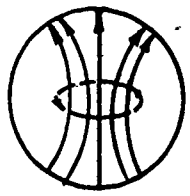

Sphere (Q = 26,000)

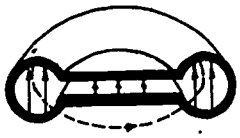

Doughnut-shaped

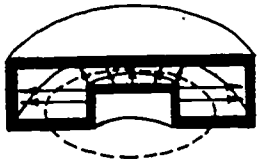

Cylindrical Ring (Q = 26,000)

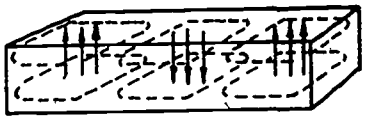

Section of Waveguide

Fig. 1--Several Types of Resonant Cavities

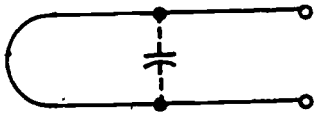

a--Quater-wave Hairpin Loop

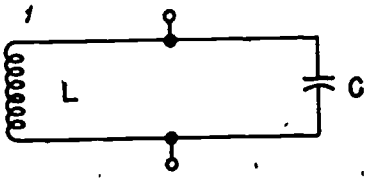

b--Equivalent Circuit

Fig. 2

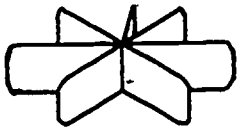

Half Turn Loop in Parallel
a

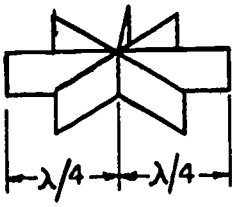

Quarter Wave Sections
b

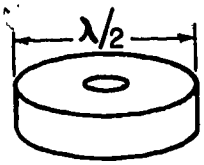

Closed Metal Container
c

Development of Cavity from λ/4 Sections

Fig. 3

Introduction: Continued

If a method is devised to vary the cavity size, the cavity can be tuned much the same as any resonant circuit. Three such methods are currently in use and these are shown in Fig. 4. The first illustration depicts a threaded screw attached to a disc that can vary the cavity size and change the resonant frequency of the cavity.

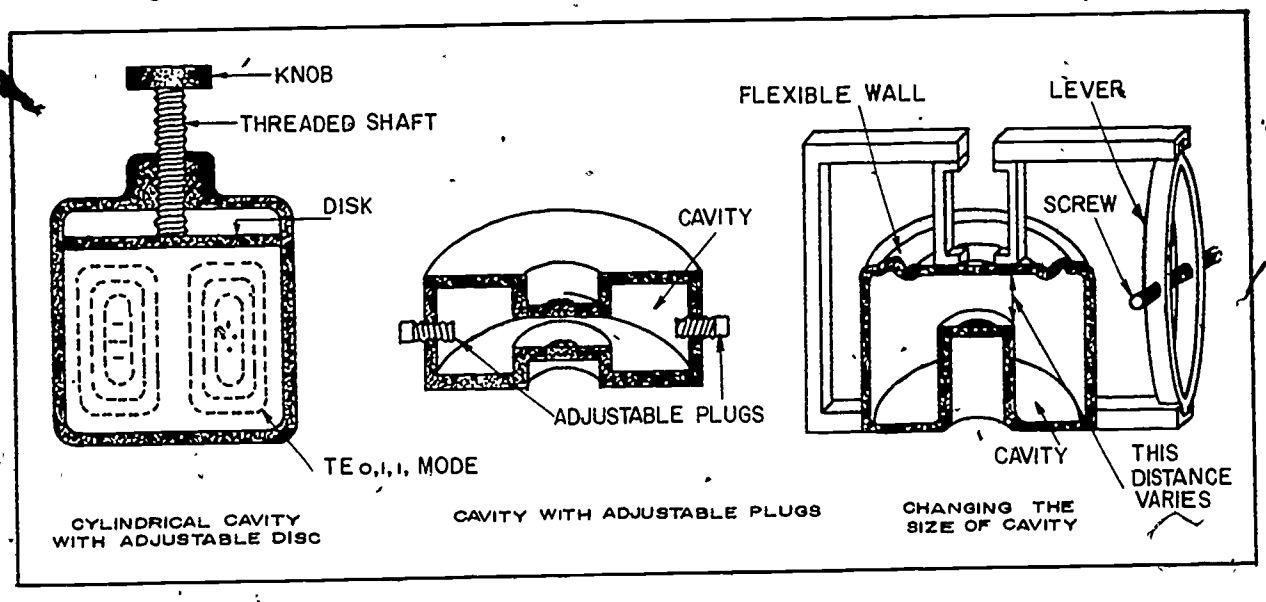

Fig. 4--Method of Changing the Frequency of a Cavity

The second method employs plugs that screw into the cavity, and these plugs reduce the magnetic field strength in a manner similar to decreasing the cavity inductance. The further the screw is inserted into the cavity, the higher the frequency.

The third method varies the cavity size by compressing the top toward the bottom of the cavity. This causes the distance between the top and bottom to vary, thus changing the resonant frequency. This action may be compared to moving the plates of a capacitor closer together, thereby increasing the capacity and lowering frequency.

Several methods of exciting the cavity are in use today. Energy may be inserted or removed from the resonant chamber by placing a probe or loop inside the cavity. Energy to start oscillation is provided when current flows by setting up E lines parallel to the probe. If a loop is placed in the area where the magnetic field will be present, an H field will be started. Another way to excite the cavity is to design the chamber in such a way that electrons may be "shot" across the cavity through a perforated plate creating a disturbance and setting up an H field. Figure 5 illustrates these three methods.

Introduction: Continued

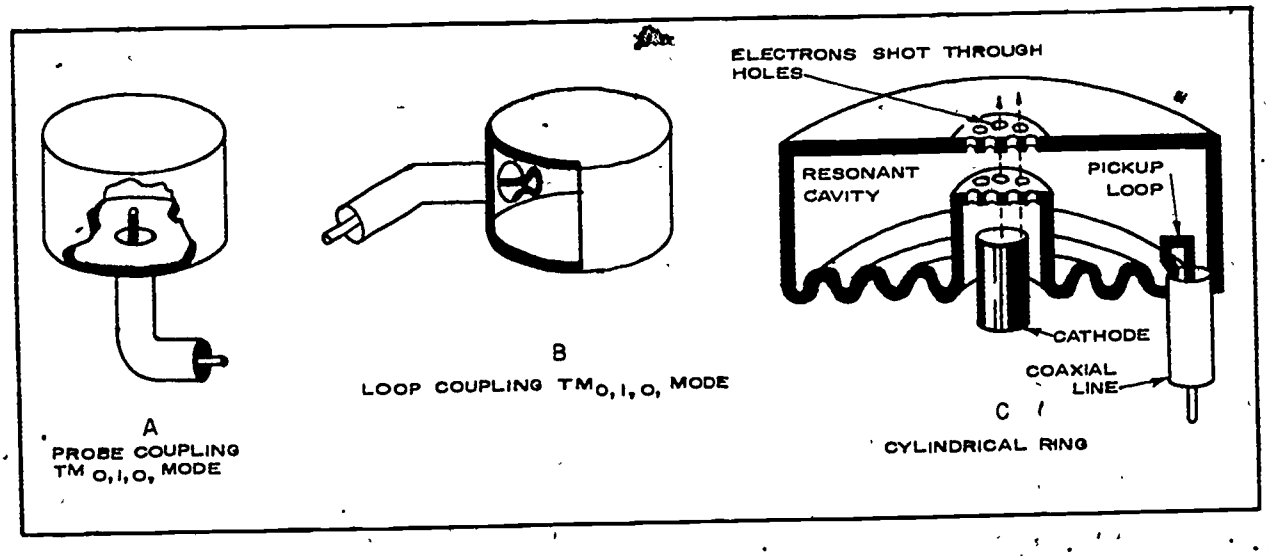

Fig. 5--Methods of Exciting the Cavity

Resonant cavities have uses in addition to serving as "tuned" circuits for microwave oscillators (Fig. 6). They may be used as frequency measuring devices (called wavemeters). They may be used as mixing chambers by injecting two or more signals into the cavity and obtaining an output that is a combination of the input signals. Cavities can provide impedance matching by properly connecting two sections of transmission line (waveguides) together with a resonant cavity between them. A cavity may be used in a ringing circuit similar to the action encountered in the study of lower frequency circuits. This ringing circuit can be used to advantage in radar apparatus as an echo box and is used to check the radar set for proper operations.

The theory of the operation of individual oscillating devices, such as the klystron, magnetron, backwave oscillator, traveling wave tube, Gunn diode and other devices is explained in the text of the reference book. Wavemeters and detectors are also covered. Waveguides will be discussed in the R.S.A. on transmission lines.

Introduction: Continued

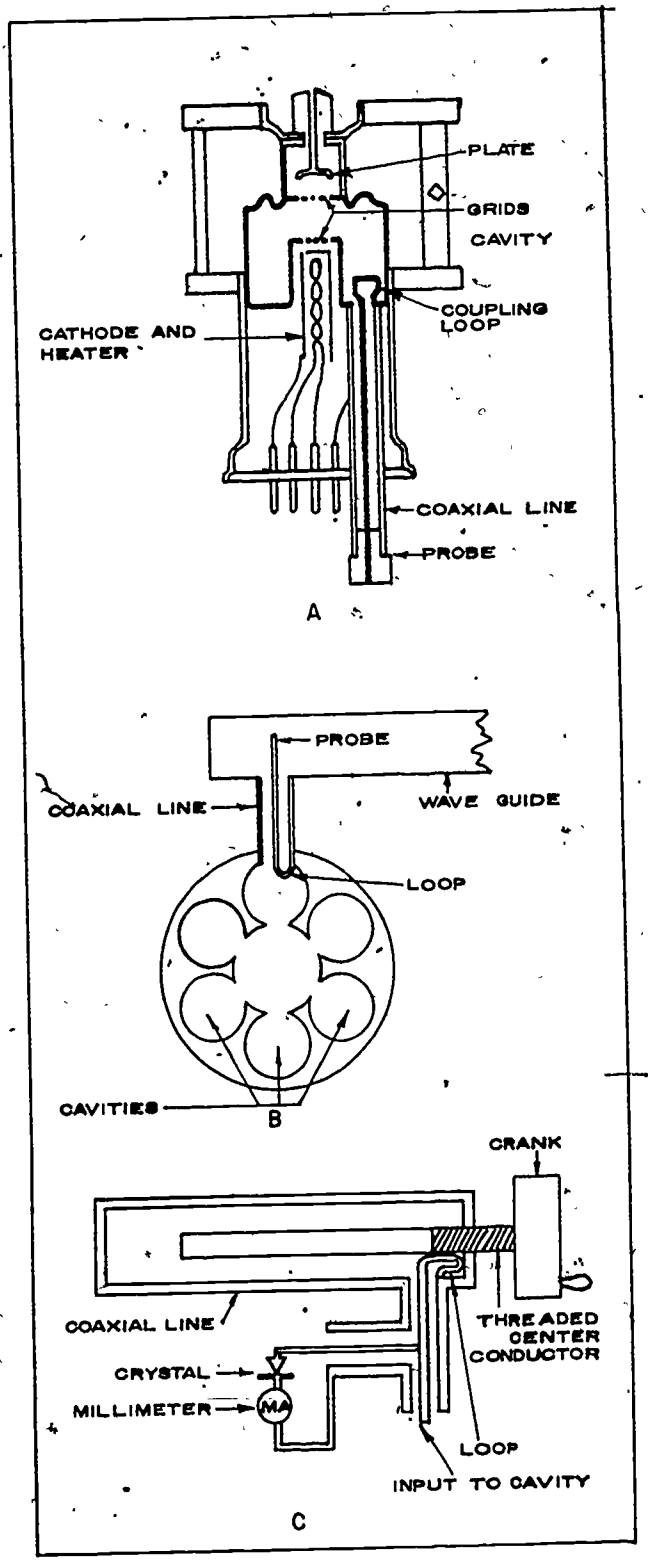

Fig. 6--Uses of Cavities

References:

1. Robert L. Shrader, ELECTRONIC COMMUNICATION, 3rd Ed., Gregg/McGraw-Hill Book Co. Read pages 642--654.

2. George Kennedy, ELECTRONIC COMMUNICATIONS SYSTEMS, 2nd Ed., Gregg/McGraw-Hill Book Co. Read pages 409--524.

Study Questions:

1. Name six microwave oscillators and describe the basic operation of each.

2. How does a cavity wavemeter measure the microwave frequency?

3. Explain how a resonant cavity works.

4. What is the impedance of a quarter-wave shorted stub at the open end?

Job: The Klystron

Objective:

The student will: (1) Connect the necessary components of a microwave trainer to generate a microwave frequency and (2) make the necessary adjustments to cause a microwave signal to be generated.

Job Information:

It is the purpose of this job to teach the student how to generate a microwave signal by using the classroom training aids. Familiarity will be gained with the trainer components and techniques involved in their use.

Reflex klystrons are tuned cavity microwave oscillators that are normally used in classroom trainers to produce low power output for experimental purposes. The repeller (sometimes called the reflector) of the klystron is negative in polarity, causing the electron stream from the cathode to be returned across the gap of the resonant cavity. Returning electrons distort this electron stream as it moves away from the cathode causing the electrons to move in groups or bunches. This process is called velocity modulation.

The klystron will oscillate when bunching occurs at precise intervals and is dependant on electrode mechanical and electrical adjustments. Experimentation will show that the klystron will oscillate strongly at some value of voltage better than it will at some other value.

Three adjustments are necessary to arrive at maximum power output (strongest oscillation) from the klystron. These adjustments are: (1) Cavity tuning (mechanical), (2) repeller voltage (electrical), and (3) matching to the load.

This job deals primarily with the klystron electrical adjustments. Cavity tuning and matching to the load will be covered in other jobs.

Be sure to record your readings during the procedure. They will be useful in evaluating your experiment.

Tools, Materials, and Equipment:

1. Microwave training kit (or microwave transmitter)
2. Hand tools

References:

1. Microwave training kit instruction book or microwave transmitter manual supplied by the manufacturer.

Precautions:

1. Klystrons require voltages that may be lethal. Avoid contact with these potentials. Make all connections with all power supplies turned off.

Procedure: (Instructions in parentheses are for a transmitter.)

1. Connect the equipment as shown in Fig. 1. (If your kit does not contain some of the items shown, consult your instructor.) If you are using a microwave transmitter instead of the trainer, consult the manual supplied with the unit. Locate the section on "Transmitter Tune-up."

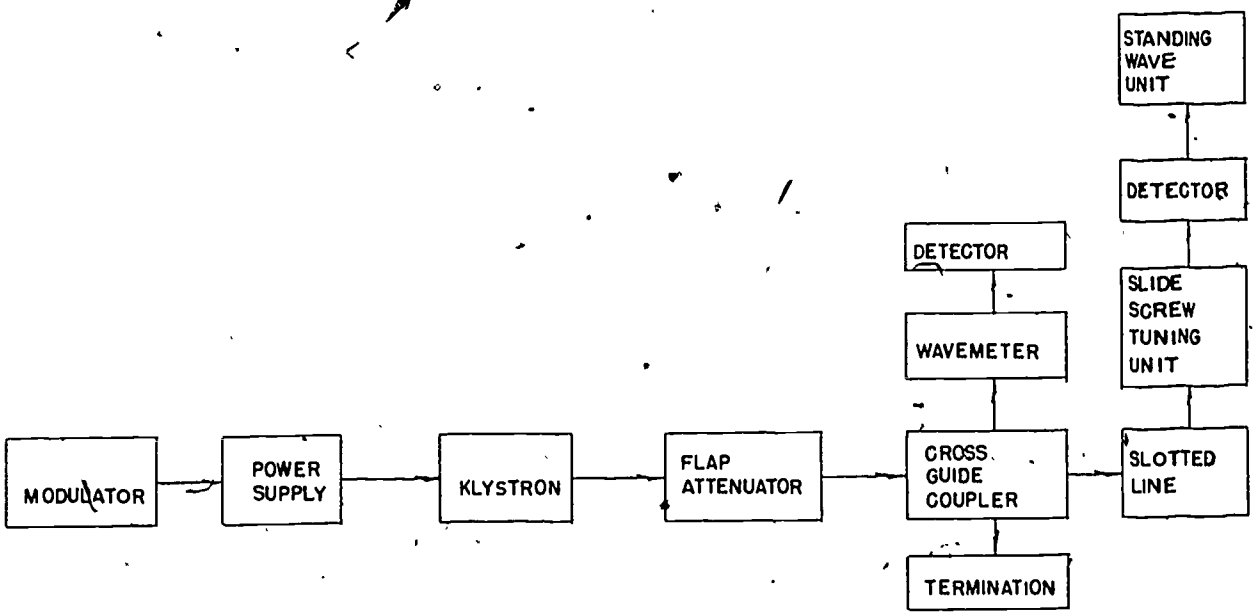

Fig. 1--Klystron Oscillator Equipment Connections

2. Insert the vane of the flap attenuator into the waveguide to obtain maximum attenuation. (Some transmitters have a solenoid-operated attenuator. If your transmitter is so equipped, operate the flap into the waveguide.)
3. Withdraw the probe on the slide screw tuner all the way out of the waveguide. (On a transmitter you may need to adjust the crystal coupling.)

Procedure: Continued

4. Adjust the range switch to "0" (zero) and set the gain control to approximately the center of its rotation on the standing wave unit. (Consult your transmitter manual.)
5. Turn power "ON" on the SWR unit. (Follow steps in the instruction manual.)
6. Set the power supply reflector voltage control to minimum.
7. Adjust the power supply beam voltage control to minimum.
8. Attach the cable from the klystron to the power supply.
9. Turn the power supply switch to "ON." Allow ample time for the electrodes of the klystron to reach operating temperature.
10. Apply repeller voltage first. The specifications for the particular klystron in your trainer (or transmitter) should be obtained from your instructor. The nominal value of most low power klystrons is about 150 volts.
11. Adjust the beam voltage to near 250 volts. The beam current will read approximately 15 to 20 milliamperes.
12. Increase the repeller voltage and watch for a dip in beam current. By alternately adjusting the beam voltage and the repeller voltage, a dip in beam current should be located.
13. Withdraw the attenuator from the waveguide. (Operate the attenuator solenoid on the transmitter.) An indication on the meter of the standing wave unit should appear. This lets you know that the klystron is producing a microwave signal. (The transmitter meter should indicate klystron current.) Should the meter still read 0 (zero), turn the gain control toward minimum and rotate the range switch in a direction to produce a meter indication that gives an on-scale reading. Keep adjusting the range and gain controls to produce a one-half scale reading (approximately).
14. Turn the voltage adjustments along with the frequency control on the modulator to produce a maximum meter reading. It may be necessary to readjust the flap on the waveguide attenuator to keep the meter from reading off scale when the gain is set at approximately one-half its rotation. The range switch may have to be moved to keep power at a safe level.
15. Run the probe of the slide screw tuner into the waveguide two or three turns and move the slide along the line to locate the largest reading. Adjust the probe in and out of the waveguide to obtain maximum reading and secure the probe to keep it from moving.
16. Move the repeller voltage from minimum to maximum to locate the different oscillations. Use the oscillation (mode) that is the most stable.
17. Adjust the modulator controls for maximum reading on the standing wave unit.
18. Have your instructor check your adjustments.
19. Turn off beam voltage.
20. Turn off repeller voltage.
21. Turn off power on all units.
22. Disassemble trainer components and replace in storage area.

Job Questions:

1. How does the flap on the attenuator unit reduce the power when it is inserted into the waveguide?

2. Does the power vary as the klystron is adjusted to different modes?

3. Which mode produced the greatest power output?

Job: Experiments with the Klystron

Objective:

The student will: (1) Experiment with some of the operating characteristics of the reflex klystron and (2) make a chart showing the voltages and currents for the different voltage modes of the klystron.

Job Information:

In Job 3 the bunching process of electrons in the klystron was discussed briefly. Since klystrons have played such an important part in microwave communications it would be well to look into their theory a little more in depth.

Figure 1 illustrates the bunching action and one can readily see that some electrons travel further than others before arriving at the cavity to produce oscillations. These different electrons, having traveled different distances and yet having arrived at the cavity at the same time must have traveled at different speeds. Figure 2 is a diagram showing a plot of velocity-versus-time of electron movement within the klystron.

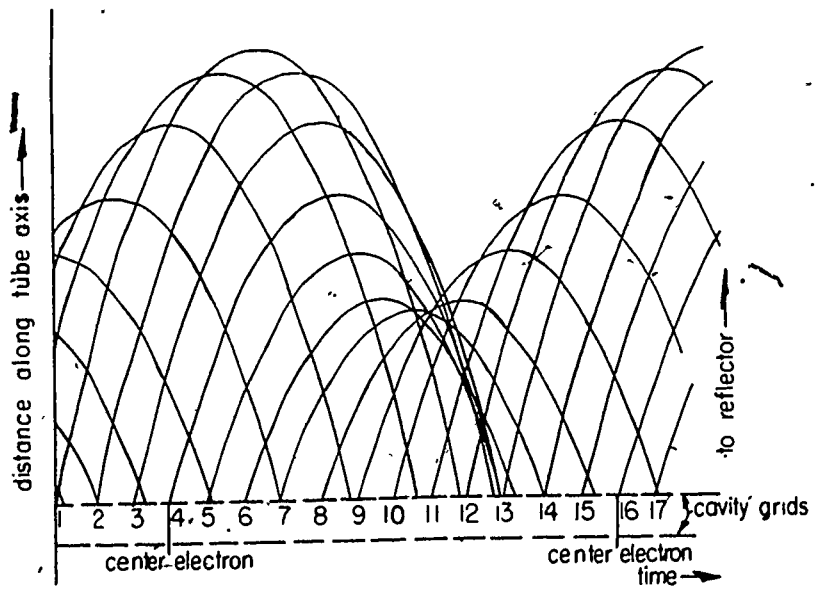

Fig. 1

Job Information: Continued

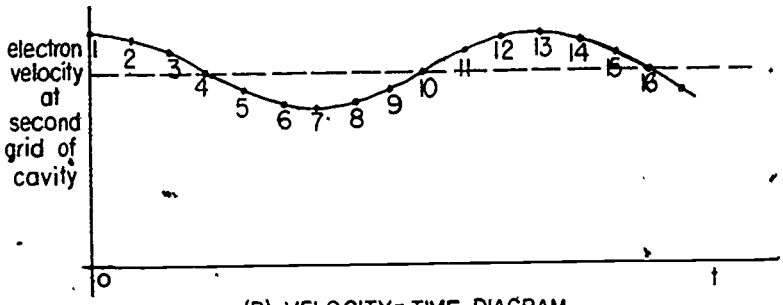

(B) VELOCITY-TIME DIAGRAM

Fig. 2--Bunching Process in Reflex Klystron

The power delivered by the returning electrons is dependent on the relative phase of the rf field at the time the electrons arrive back at the klystron cavity. For power to reach maximum, the slowest electrons must remain in the reflecting field for 3/4 cycles or some integral plus 3/4 cycles of the repeller space. In other words, N = n + 3/4 where N equals transit time of the repeller space and n equals any number such as 0, 1 2 3, etc. Refer again to Fig. 1.

Since repeller voltage affects the time that the electron spends in the reflecting field it becomes apparent that some control can be attained over electron movement in the klystron by simply adjusting the repeller voltage. When the repeller voltage is high (remember that this is a negative value) the rf field is at its strongest and the electron travels its shortest distance. This corresponds to a delay of 3/4 cycle of transit time and with succeeding decreases in repeller voltage the delay increases in increments of 1 3/4, 2 3/4, etc. as previously noted. These modes are known as voltage modes. This is not the same as the cavity mode since the cavity itself is resonant at only one frequency. Compare Fig. 1 and Fig. 3.

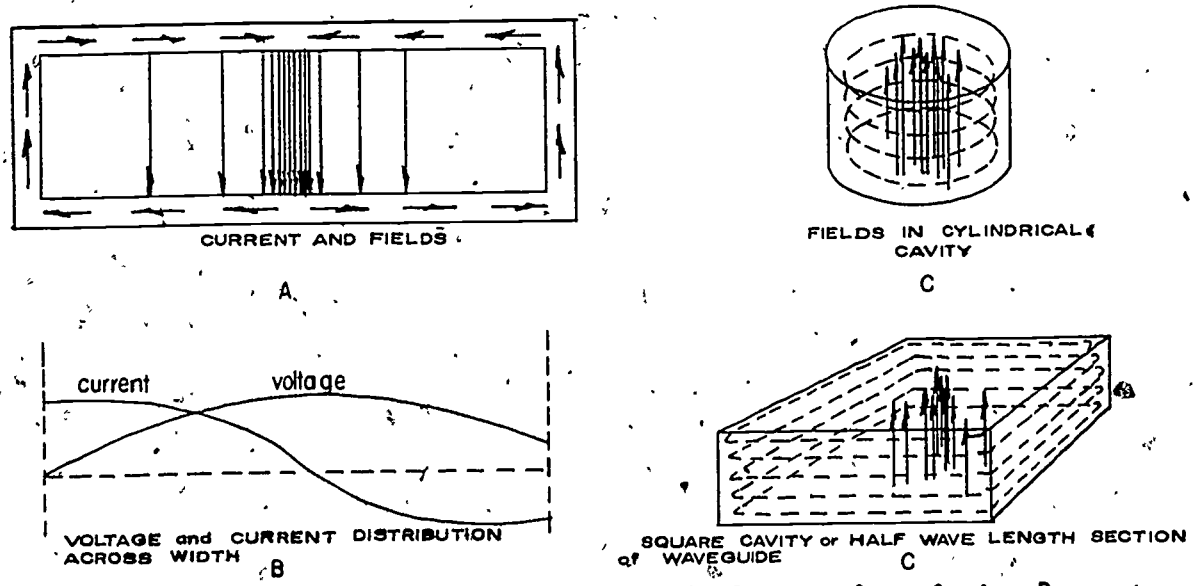

Fig. 3--Voltages, Currents and Associated Fields for Simple Mode in a Cavity Resonator

Job Information: Continued

If the beam current is too small the cavity will still not oscillate even though the transit time equals n + 3/4. There must be enough energy to overcome circuit losses before the cavity will begin to produce a radio frequency. Once oscillations are started the voltage mode that delivers the greatest number of electrons to the cavity will produce the largest power output.

The frequency of the carrier can be varied over a narrow range by changing the repeller voltage of the klystron. This can be compared to the action of a triode vacuum tube oscillator where the feedback phase is changed slightly causing a small change in frequency. If the repeller voltage is increased by a few volts the electrons return across the gap a fraction of time earlier causing the output frequency to increase and by reducing the repeller voltage a few volts the electrons arrive at the gap an instant later thus decreasing the frequency.

This ability to change the frequency over a limited range is referred to as electronic tuning and is usually measured between the half-power frequencies. The total range of change encompasses about 5% of the center frequency in most klystrons.

Summarizing, broad frequency changes are accomplished by adjusting the cavity size (mechanical tuning) and fine adjustment is made using electronic tuning. For any given cavity size there exists several voltage modes and power output depends on the voltage mode selected for operation of the klystron.

Tools, Materials, and Equipment:

1. Microwave training kit (or transmitter)
2. Hand tools
3. Transmitter manual (if you use a transmitter)

Procedure:

1. Connect equipment as shown in Fig. 4.

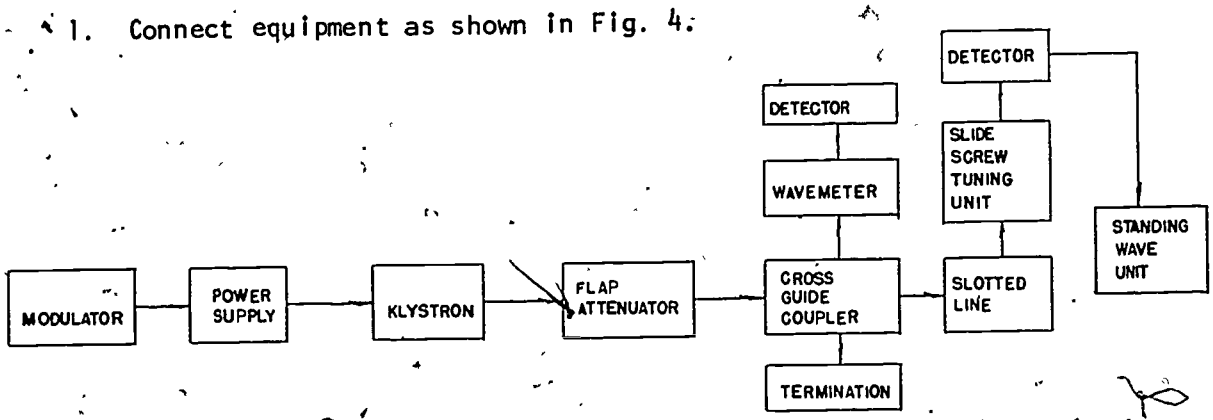

Fig. 4

Procedure: Continued

2. Tune klystron for maximum power output as noted on standing wave unit (or power output indicator on transmitter).
3. Write down the beam voltage as read on the meter.
4. Reduce power by 3 db (one-half the original values) by increasing repeller voltage.
5. Record the reading in Step 4.
6. Increase repeller voltage until the power has been reduced 10 times less than its value in Step 2 (10 db).
7. Record the repeller voltage found in Step 6.
8. Return the power output to maximum by decreasing the repeller voltage and record this reading.
9. Decrease the repeller voltage again until the power is reduced 3 db. Record this reading.
10. Decrease the repeller voltage until the power has been lowered 10 db. Record this reading.
11. Find a second voltage mode and repeat Steps 2 thru 10.
12. Locate a third voltage mode and repeat Steps 2 thru 10.
13. Tune the klystron for as many voltage modes and count as many as you can find (without exceeding the ratings of your particular klystron).
14. Readjust the beam voltage to 2 other values and repeat Steps 2 thru 13.
15. Make a chart and identify each mode.

Job Questions:

1. Was the power output the same in Step 8 as it was in Step 2?

2. How would you calculate the half power points of any given mode?

3. How did the power output vary from mode to mode?

4. What happens to electrons within the rf field of a klystron when the repeller voltage is increased? When it is decreased?

Related Study Assignment No. 4: Microwave Modualtors

Objective:

Upon completion of this assignment, the student will:: (1) Know how data is impressed upon a microwave carrier through the use of the microwave modulator and (2) become familiar with the necessary bandwidths in the modulator.

Introduction:

The modulator in a microwave transmitter has the same function as the modulator of any other radio device, to impress or add information to a radio frequency carrier wave. As one would expect, the circuitry and the components contained in a microwave modulator are very similar to those in other units doing the same job.

Since the repeller voltage of a klystron can be changed a few volts to cause a resulting change in output frequency, it becomes a fairly simple matter to connect the output of the modulator to the repeller supply and frequency modulate the klystron. A typical circuit is shown in Fig. 1.

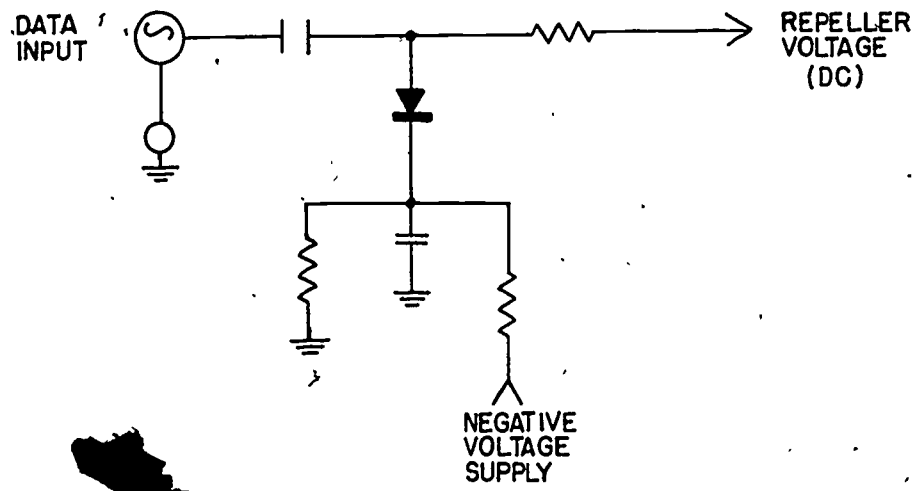

Fig. 1--Method of Modulating Klystron Repeller

Introduction:

Microwave equipment being sold today is generally entirely solid state. Modulation processes are just as simple in the transistor microwave oscillators and a typical circuit appears in Fig. 2. The varying data voltage is impressed upon the transistor biasing voltage which varies the frequency generated by the oscillator. This same bias voltage may be used in conjunction with the automatic frequency control circuits to correct the oscillator frequency if it should drift from the assigned channel.

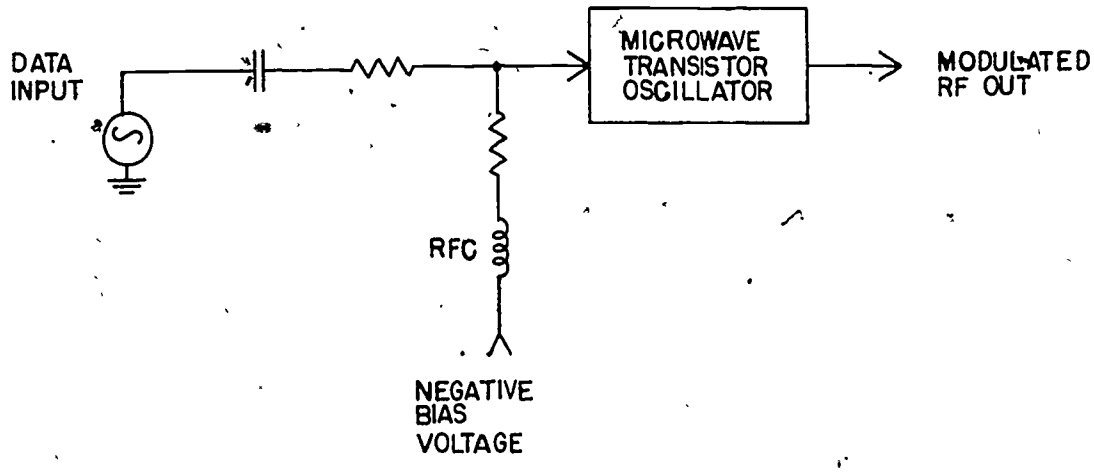

Fig. 2--Method of Modulating Microwave Transistor Oscillator

Unlike communications transceivers that have narrow bandwidths (± 5 kHz) the typical microwave system may employ bandwidths ranging from fifty kilohertz to several megahertz. The circuits associated with the modulator must be capable of amplifying the audio, video, or other data that is to be impressed on the microwave carrier. As an example of bandwidths that may be necessary, a studio-to-transmitter link of a television broadcast station may need a bandwidth of 10 MHz. This is for a video signal at least 4.5 MHz, an audio subchannel at 6.8 MHz and auxiliary subchannels at 7.6 and 8.2 MHz. Microwave transmitters employed as STLs in TV broadcasting are usually licensed for a 25 MHz bandwidth (example: The operating frequency listed on the station license may be 6.875 GHz to 6.900 GHz. The transmitter would then be tuned to the center of the band or 6.8875 GHz).

Some microwave systems are even wider than STLs. Relay stations carrying network television programs, telephone messages, and other data simultaneously may have bandwidths up to 40 MHz and maintain a bandwidth of 20 MHz with the gain varying as little as ± 1 db in the center of band. Stations carrying only limited voice channels, telemetry, or other data

Introduction: Continued

may be much narrower in bandwidth. A typical industrial installation may be licensed as 3500F3 or 3500 kHz in bandwidth (see Fig. 3)

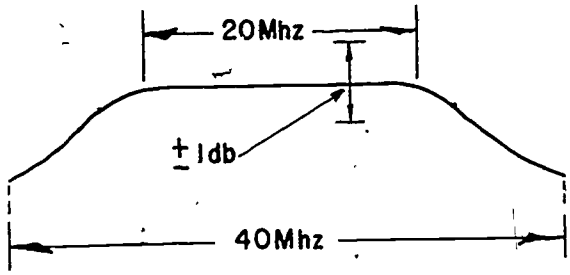

Fig. 3--Response Curve of 40 MHz Baseband Amplifier

The circuit that amplifies these frequencies is today called a baseband amplifier. This circuit may contain a variable attenuator to adjust input levels, a differential amplifier, a driver amplifier, an output stage, a service channel amplifier, a pilot oscillator, and other accessories. The baseband amplifier usually determines the bandwidth of the system.

The latest equipment to hit today's market is digital microwave systems. Carriers in these transmitters may be frequency modulated, full double sideband amplitude modulated, phase modulated, quadrature-phase-shift keyed, or several other methods.

Data input for many microwave systems are from multiplier equipment and this subject will be covered in a later R.S.A.

Study Questions:

1. How is the reflex klystron frequency modulated?

2. What voltage is varied in the microwave transistor oscillator?

3. What bandwidths may be encountered in the baseband amplifier of a microwave transmitter?

4. Name several methods of modulation used in modern microwave systems?

Job: Experiments with Klystron Electronic Hysteresis .

Objective:

The student will: (1) Observe electronic hysteresis in a klystron and (2) prepare a chart showing the effect of electronic hysteresis in the klystron.

Job Information:

A characteristic of the klystron that has not been discussed is electronic hysteresis. This effect can be caused by the design of the tube, the phase of the radio frequency current, or multiple transit of electrons across the cavity gap.

Electronic hysteresis is the difference encountered when the repeller voltage is increased to produce maximum power output at a given frequency and, after passing this maximum value, the repeller voltage is decreased to reach maximum power again on the same voltage mode noting that maximums are reached at different repeller voltage. The frequency of the carrier has also changed due to this electronic tuning (see Fig. 1).

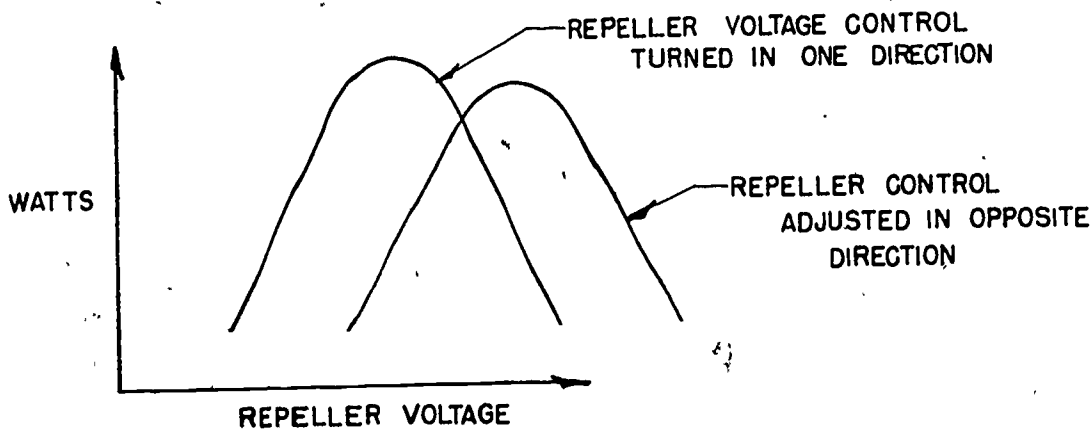

Fig. 1--Electronic Hysteresis Curve of a Klystron

Tube design must be carefully considered and the load must be matched properly if this effect is to be held to a minimum. The phase of the radio-frequency current affects the rf voltage amplitude. The bunching process will naturally produce a small phase shift provided

Job Information: Continued

that the rf voltage is large and other shifts may be noted in some types of reflecting fields.

If the center of a mode is approached from the negative-repeller-voltage side and oscillations are occurring with rf current leading rf voltage, it will be noted that as rf voltages increase due to the increase of oscillations and phase angle (Ø) begins to approach zero. If the repeller voltage is again increased, the tube will continue to oscillate even though it has passed the point in which conditions first become favorable for oscillations. Eventually, continuing to increase repeller voltage, the tube will reach points less favorable for oscillation and the output will drop rapidly to zero. Turning the repeller voltage control in the opposite direction produces a situation just reverse from that described above. In summary, the tube must be adjusted to near the center of a voltage mode before it will begin to oscillate but once started it will continue to oscillate at voltages somewhat away from the center of the mode.

Multiple transit of electrons is probably the most predominant of the causes of electronic hysteresis. Multiple transit of electrons may be explained by realizing that all of the returning bunched electrons are not collected by the cavity wall, cavity grid, accelerating grid, etc. They pass on through the cavity and approach the cathode. With their energy spent by this time they are returned through the cavity again. This is the third trip for these electrons (the first toward the repeller, the second as bunches away from the repeller). The phase of these third-transit electrons varies widely with very small voltage changes on the repeller and adds discontinuities much in the manner of ripple current in a power supply.

If the load is improperly matched, electronic hysteresis may also be encountered. The frequency may move suddenly from one value to another due to improper tuning, matching or coupling the transmission line to the cavity by means of a coupling loop. On long runs of transmission lines, relatively large values of standing waves on the line can cause this same effect.

If the student is to arrive at the same power and frequency using the same voltage mode, the klystron repeller voltage must be adjusted from the same direction of rotation of the control.

Tools, Materials, and Equipment:

1. Microwave training kit (or microwave transmitter)
2. Hand tools

Procedure:

1. Set up equipment as in Fig. 2 (or if using a transmitter, consult transmitter manual).

Procedure: Continued

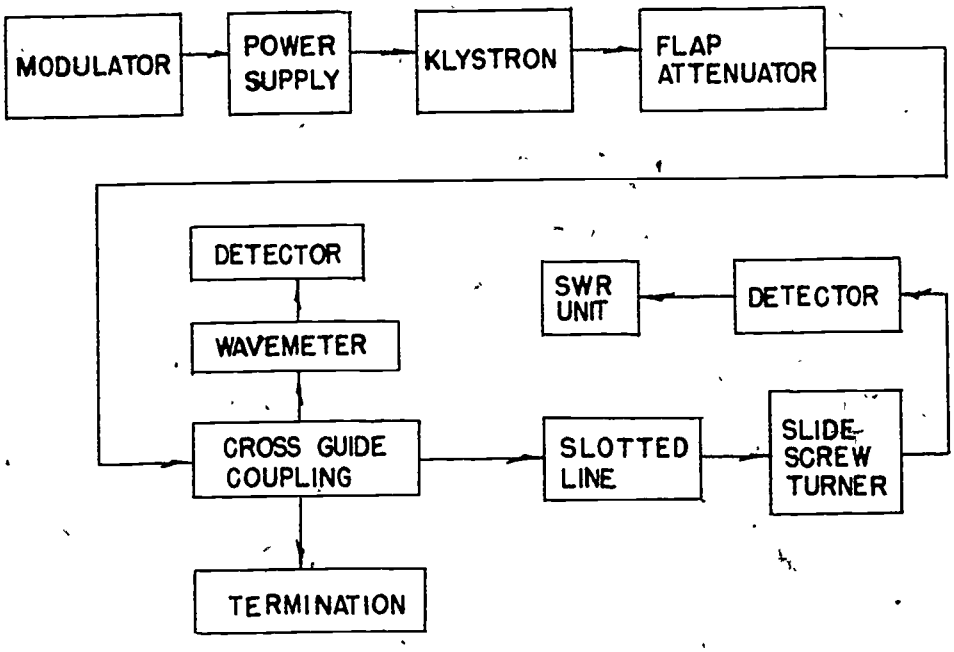

Fig. 2--Equipment Connection for Job 4

2. Adjust the repeller voltage to produce a stable oscillation and maximum power output. Note power output.
3. Move the repeller voltage control to the left carefully watching for the point that the power drops to zero.
4. Move the repeller control to the right until the same effect is encountered, noting this reading.
5. Move the repeller control left again and record the repeller voltage at several points during the adjustment. Be careful not to rotate the control to the point that output was zero, as noted in Step 3.
6. Rotate the repeller control to the right recording the repeller voltage at several points, as in Step 5.
7. Prepare a chart similar to Fig. 1 using the reading recorded in Steps 5 and 6.

Job Questions:

1. Name three things that can produce the effect called electronic hysteresis.

2. Explain multiple transit electron effect.

3. Did power output remain the same at the same repeller voltage when rotating the control first left and then right?

Related Study Assignment No. 5: Microwave Transmission Lines

Objective:

Upon completion of this assignment, the student will: (1) Know how a waveguide transfers microwave energy from one place to another, (2) know the theory of the design of a waveguide, (3) identify the different shapes of waveguides, and (4) pass a written examination on waveguides with a score of 75% or more.

Introduction:

In previous studies of transmission lines, twin line (side by side conductors) and coaxial lines have been the most popular method of coupling a transmitter or receiver to an antenna. A brief review of these lines would be in order before beginning the study of waveguides.

A transmission line is used to transfer energy from a source to a load. These lines are necessary because surrounding objects may modify radiation patterns and change the ability of an antenna to be an effective radiator.

In the use of direct current, the main requirement of a transmission line is to provide a low resistance path from the source to the load. At the commercial power frequency of 60 Hz, a transmission line from the power station to the consumer has a small amount of reactance when compared to its DC resistance. However, as frequency increases, reactances increase. The operating wavelength also decreases as frequency increases, meaning that current travels along a line a shorter distance before it experiences a 180° change in direction. In comparison, the wavelength of a 60 Hz signal is 3100 miles. At 1000 Hz the wavelength is 186 miles and at 960 MHz one cycle is completed in 12.3 inches. At higher microwave frequencies such as 10,000 MHz the wavelength is 3 centimeters or 1.18 inches. When a line is physically as long or longer than one wavelength it becomes an rf line.

A transmission line has several constants and these may be lumped into an equivalent circuit as shown in Fig. 1. The series resistance represents the DC resistance of the line, the inductance depicts the self-inductive action of the line, the capacitor shows the total capacity of the line. The shunt resistance indicates the leakage of the line. These four constants are found in any transmission line carrying rf currents.

Introduction: Continued

(E) EQUIVALENT CIRCUIT

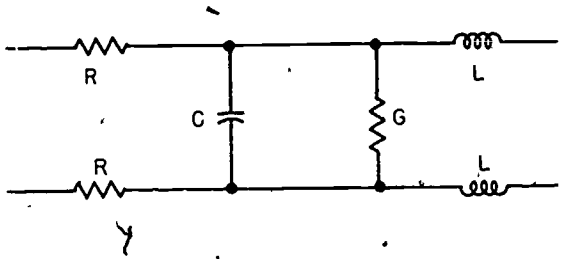

Fig. 1--Transmission Line Equivalent Circuit

Since the resistance is uniformly distributed along the line (as is the inductance and capacitance) it will be found that the line displays a constant impedance at any point along the length of the line. In a theoretical lossless line, if a DC voltage is applied to one end of the line (Fig. 2) the capacity represented by C_1 will attempt to charge but the charging current is opposed by the inductance L_1. After a certain length of time, C_1 will charge to near maximum and C_2 will begin to charge but is opposed by the inductance L_2. This action will continue for a line of infinite length assuming no loss dissipated into the resistance of the line (I^2R loss). This produces a constant current flow from the source toward the load end of the line. This may be compared to the constant current circuit illustrated in Fig. 3. If a section is removed from any location along the line, it displays the same characteristics as the entire line.

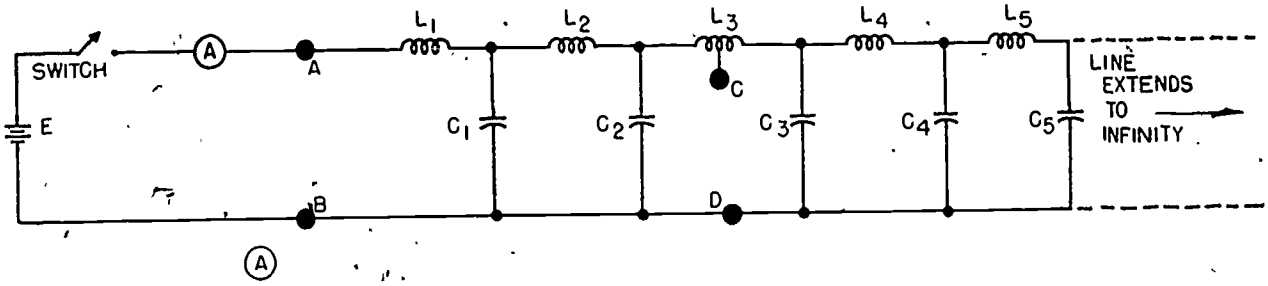

Fig. 2--Theoretical Lossless Line Showing L & C

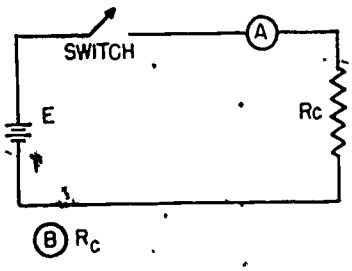

Fig. 3--Equivalent Circuit Showing Constant Current to a Load

Introduction: Continued

Since a constant current will flow on the line depending on the applied voltage, the impedance of the line may be found by Ohm's Law for AC circuits Z = E/I. This impedance is known as the characteristic impedance. If the inductance and capacity of the line is known, one can even predict how long it will take for the current to travel the length of the line. If the load end of the line is connected to a resistive load equal to the characteristic impedance (Zo) of the line, all the energy sent down the line will be dissipated in the load.

One thing you will note in the previous discussion and this is that the energy has traveled along wire conductors. At frequencies employed in the microwave region a different type of transmission line is used. This line is based upon the same principle studied in the R.S.A. on microwave oscillators using an infinite number of quarter-wave hairpin loops with the loops connected in such a manner as to produce a hollow pipe. This hollow pipe propagates energy by the movement of electromagnetic fields.

Two wire line is a poor line for transmitting electromagnetic fields since it does not restrict these fields in a direction perpendicular to the plane of the conductors and this results in some loss through radiation. This loss can be reduced by using coaxial cable but some losses still occur due to skin effect. By removing the central conductor and the dielectric material of a coaxial cable, a hollow pipe is formed and this pipe, if of the proper diameter, will transfer energy with less loss than the original coaxial cable. This type of line is called a waveguide. See the comparison of the cross section of coax and waveguides in Fig. 4. It must be noted here that a waveguide does not have to be round but may be square, rectangular, or eliptical, the most popular style being rectangular in cross section.

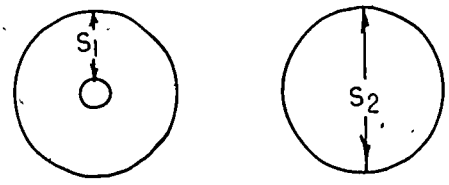

Coaxial Line Waveguide

Comparison of Spacing
in Coaxial Line and Waveguide

Fig. 4--Cross Sectional View of
Coaxial Line and a Round Waveguide

Introduction: Continued

Waveguides have several advantages and disadvantages. At microwave frequencies the advantages outweigh the disadvantages. The advantages are as follows:

1. A waveguide has a large inner surface area which reduces skin effect. This large surface gives the energy a lower resistance path to travel and reduces copper losses (I^2R loss).
2. Losses due to heat buildup in the insulating material is greater in two conductor or coaxial than in a waveguide. (Remember, a waveguide has only air as a dielectric.) Insulation losses in waveguides are, therefore, negligible.
3. Waveguides are more rugged than two-wire or coaxial line because of their physical construction. These guides are usually of fairly heavy, rigid metallic pipe as compared to the solid (or stranded) wire conductors of two-wire line or the flexible braided outer conductor and wire center conductor of coaxial cable.
4. Waveguides are, as a general rule, easier and simpler to construct since they contain no center conductor or insulating material.
5. Radiation losses are minimized since the magnetic fields are entirely contained within the hollow metallic structure.
6. A waveguide will handle more power than a coaxial line of equal size. Power-handling capabilities may be calculated using the formula $P = E^2/Z_0$ where P = the power in watts, E is the voltage applied to the line, and Z_0 is the characteristic impedance of the line. Referring back to Fig. 4, it can be seen that the spacing between the center conductor and the shield of a coaxial cable is about one-half that of the conducting surfaces of an equivalent size waveguide. This means that the breakdown voltage of a waveguide is somewhat larger than that of a coax.

Waveguides do have some disadvantages. Recall the calculations of wavelengths of the different frequencies in the earlier portion of this R.S.A. Since a waveguide is constructed of an infinite number of quarter-wave hairpin loops joined together at their open ends (Fig. 5), it is apparent that the physical size must be limited to frequencies that have very short wavelengths. In comparison, 60 Hz would require a waveguide of rectangular measurements of 755 miles in width and 1550 miles in height. The dimensions of a 3 cm (10,000 MHz) microwave line would be slightly larger than $\frac{1}{4} \times \frac{1}{2}$ inch.

The second disadvantage of waveguides is also related to wavelength and dimensions. If the cross section must be $\frac{1}{2}$ wavelength by $\frac{1}{4}$ wavelength for propagation to occur, there is some frequency at which point the $\frac{1}{2}$ wavelength dimension is exceeded and this frequency and all other longer wavelengths cannot be transmitted down the line. Coaxial cable, other than losses already mentioned, is not subject to this limitation. There also is a practical upper limit that the waveguide can accommodate (such as a large dimension approaching 1 wavelength).

Introduction: Continued

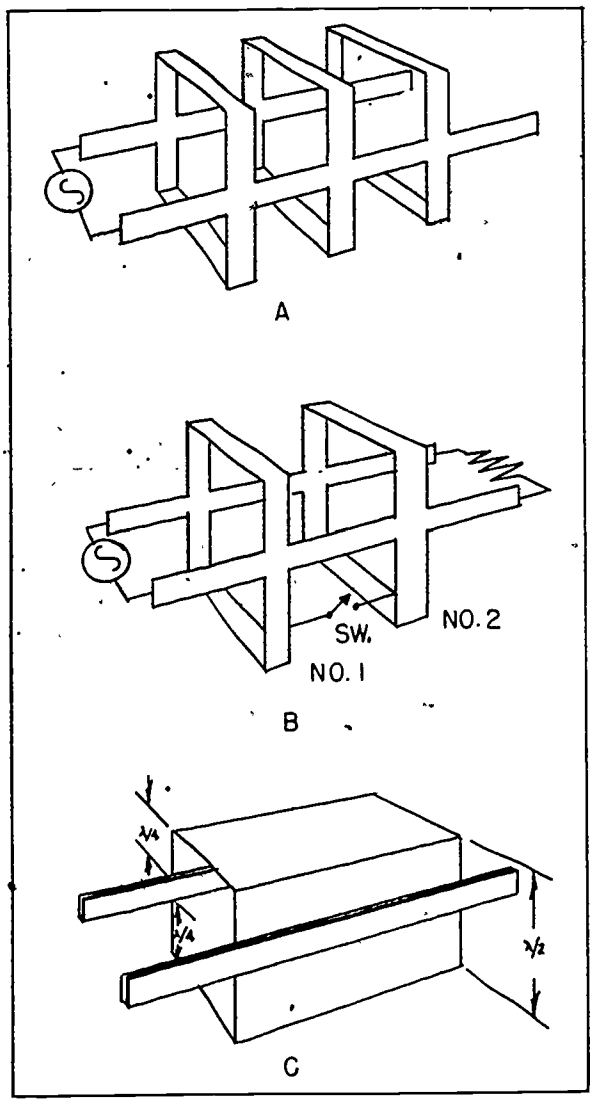

Fig. 5
Development of Waveguide by
Adding Quarter-wave sections

Introduction: Continued

The low frequency limit is referred to as the cutoff frequency and may be calculated using the formula:

$$\text{FREQUENCY (cutoff)} = \frac{2a}{\sqrt{(m^2) + (na/b)^2}}.$$

where: a equals the dimension in attached figure
b equals the dimension in attached figure
m equals the first subscript of the mode
n equals the second subscript of the mode

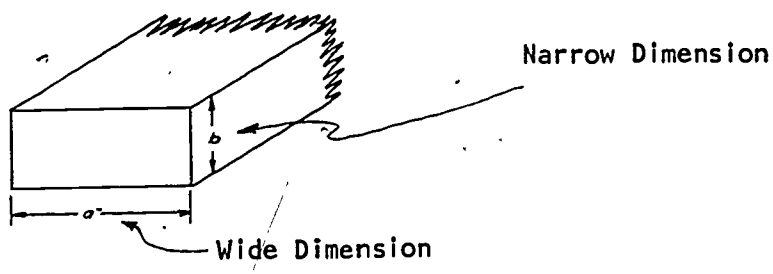

Example: 3 cm wavelength (10,000 MHz), TE_1, o mode

a = 1.5 cm
b = .75 cm
m = 1
n = 0

$$F(\text{cutoff}) = \frac{2a}{\sqrt{(m^2) + (na/b)^2}} = \frac{2 \times 1.5}{\sqrt{(1^2) + \left(\frac{0 \times 1.5}{.75}\right)^2}} =$$

$$\frac{3}{\sqrt{1 + o}} = \frac{3}{1} = 3 \text{ cm}$$

For this reason, waveguides are usually made to a wide dimension of about .7 wavelengths and a narrow dimension of from .2 to .5 wavelengths.

As was pointed out earlier, movement of energy within a waveguide is accomplished through the use of electromagnetic fields. Current and voltage in the waveguide are used to form these fields. Two fields are located in the guides. The technician should become acquainted with each one and the location or position occupied by each field.

The first field that is always present in a waveguide carrying energy is the magnetic field. This field is generated by the movement of electrons in the conducting material. If a line of force is present and is in the form of a closed loop a small electromagnetic field is set up and

Introduction: Continued

by combining many of these single lines a stronger magnetic field is formed. This field is called an H field and is made up of H lines. The strength of the field depends on the current and the direction may be determined by using the left-hand rule.

The magnetic field around a single conductor is pictured in Fig 6a. If the conductor is formed into a coil, the fields around the turns tend to cancel but external of the coil the closed loop is formed producing the magnetic field as in Fig. 6b. Currents and the H field are shown in c and d of the figure. A waveguide three half wavelengths long showing the magnetic field from three views is illustrated in Fig. 7. and, as you can see, the field is strongest near the edge of the waveguide. Notice the arrows indicating the direction of the field. They are reversed every half wavelength.

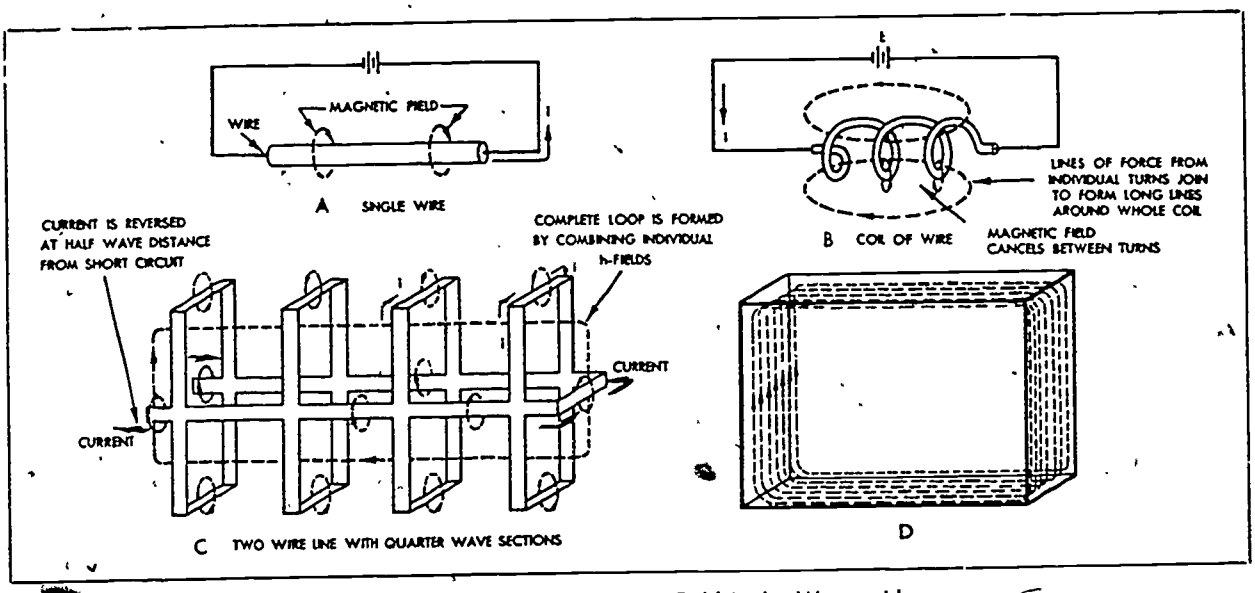

Development of Magnetic or H-Field in the Waveguide

Fig. 6

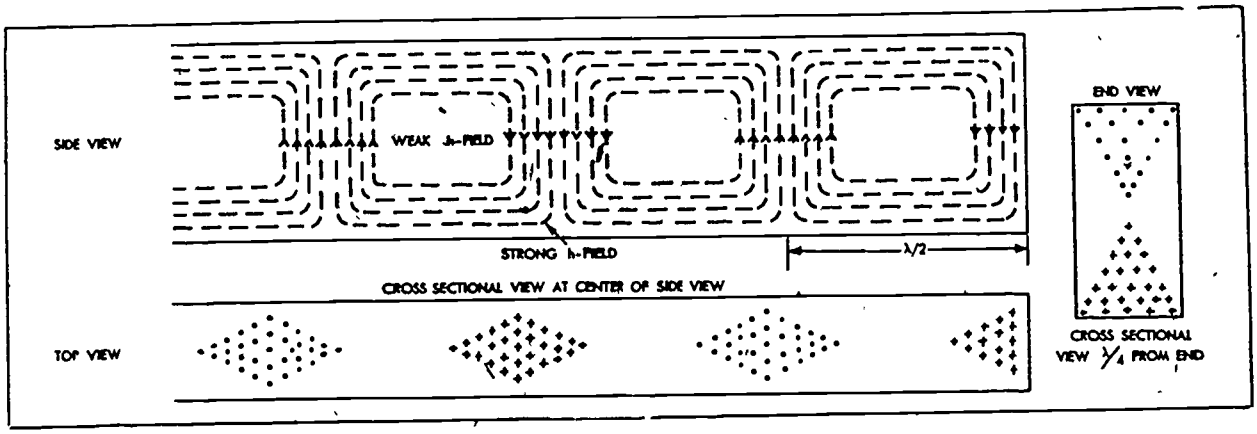

Magnetic Field in Waveguide Three Half Wavelengths Long

Fig. 7

Introduction: Continued

One other thing that is necessary for energy to travel down a waveguide is that no component of the magnetic field can be perpendicular to the field at the surface of the waveguide. You can see that the H lines are parallel to the surface in Fig. 7.

The other field found in the waveguide is the electric or E field. This is an electrostatic field like the one found in a charged capacitor (Fig. 8a). The number of arrows, pointing from positive to negative, indicates the strength of the E field. In a waveguide this strength varies along the length of the line according to the current on the line (Fig. 8b). Each line of stress is called an E line. The addition of half-wave frames gives a view of the E field in three dimensions showing points of maximum and minimum voltage along the line (Fig. 9).

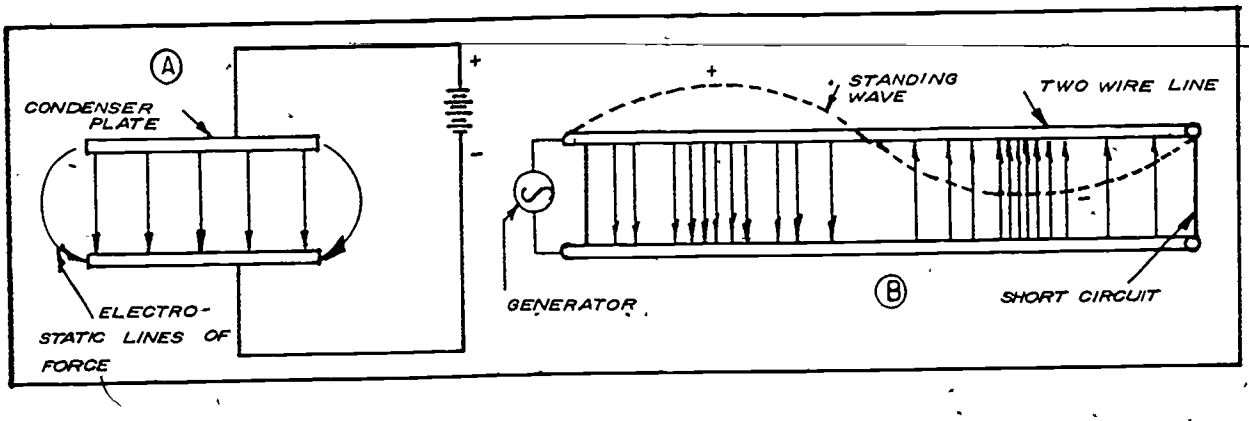

Fig. 8--Electric Field between Condenser Plates and a Full-wave Section of Two-wire Line

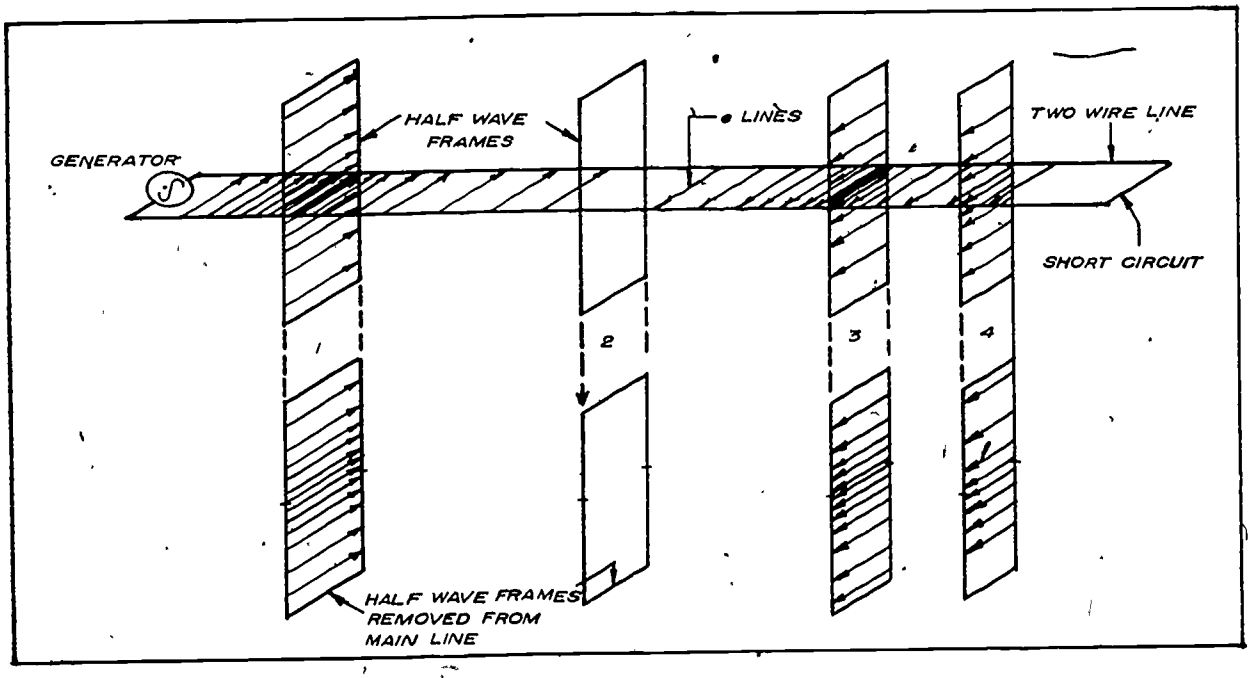

Fig. 9--Magnitude of Fields on Half-wave Frames Vary with Strength of Field on Main Line

Introduction: Continued

A cross sectional view is presented in Fig. 10. The E field must be at zero at the top and bottom of the waveguide and at other places must be perpendicular to the walls. This satisfies the condition that no electric field may exist tangent to the walls of the guide.

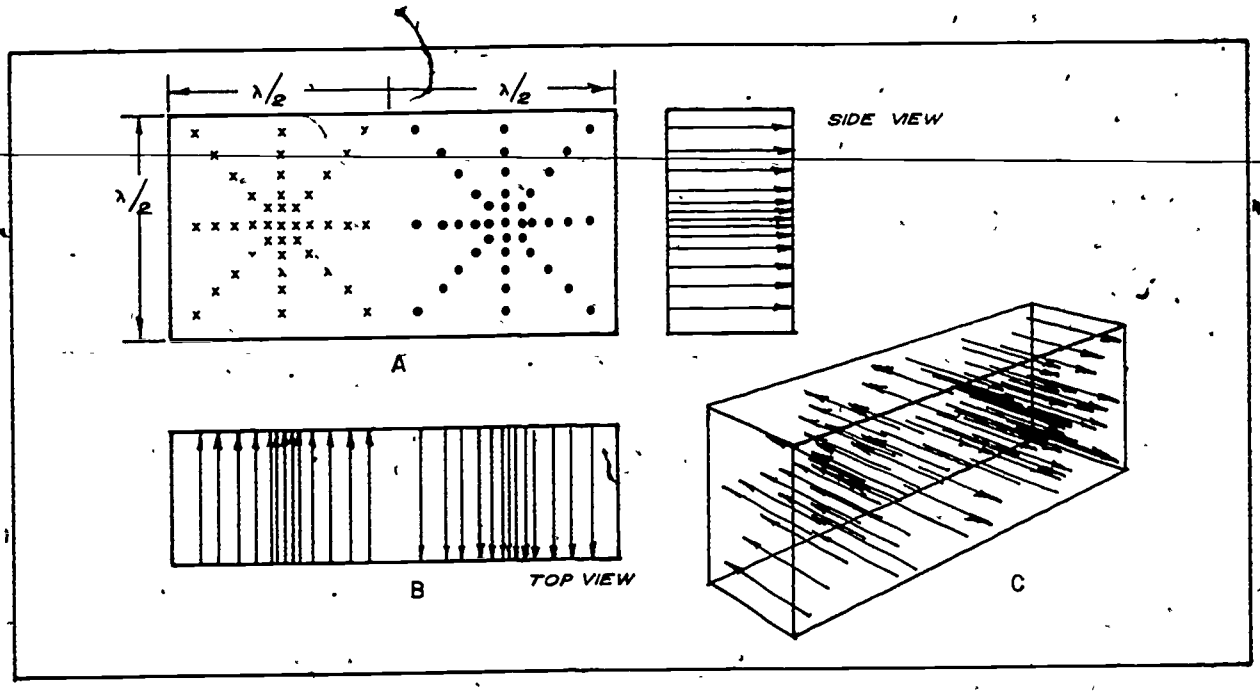

Fig. 10--E Field in Actual Waveguide

The two fields just discussed must exist at the same time in order for propagation of energy to occur. Each field is interdependent on the other, that is, an H field produces a current that causes a voltage difference. This voltage produces an E field that causes a current that results in an H field. Radio frequencies are thus transmitted down the waveguide. Figure 11 shows both fields in a waveguide as they exist simultaneously.

When such a field exists, it is referred to as a mode of operation. The field that is easiest to produce in a waveguide is called the dominant mode. Other modes are possible and some of these are pictured in Fig. 12.

Introduction: Continued

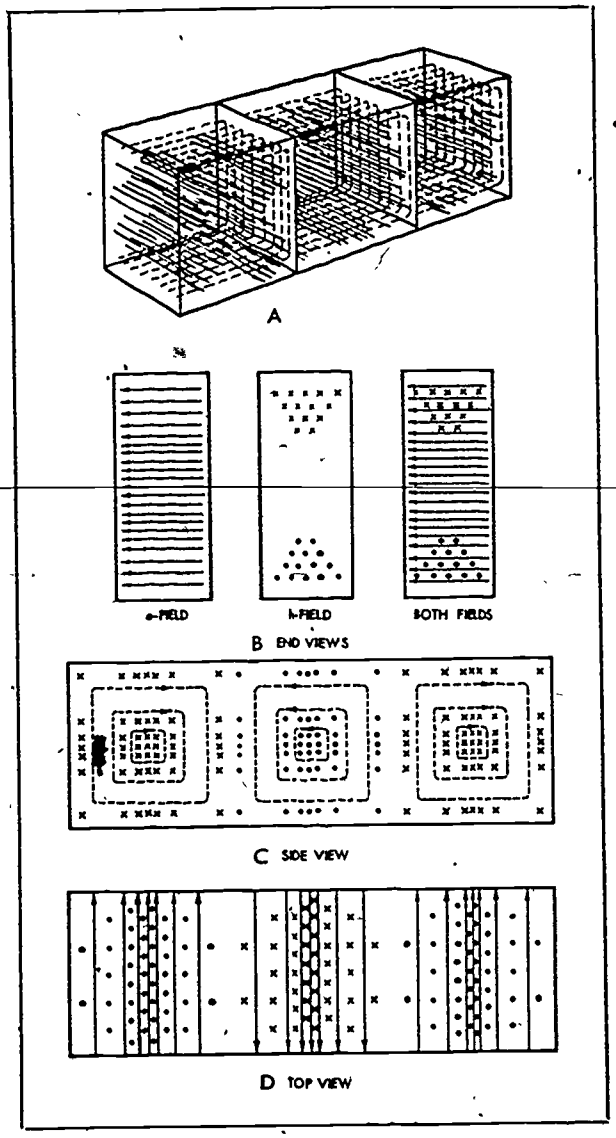

Fig. 11--Conventional Picture of both Fields in Waveguide

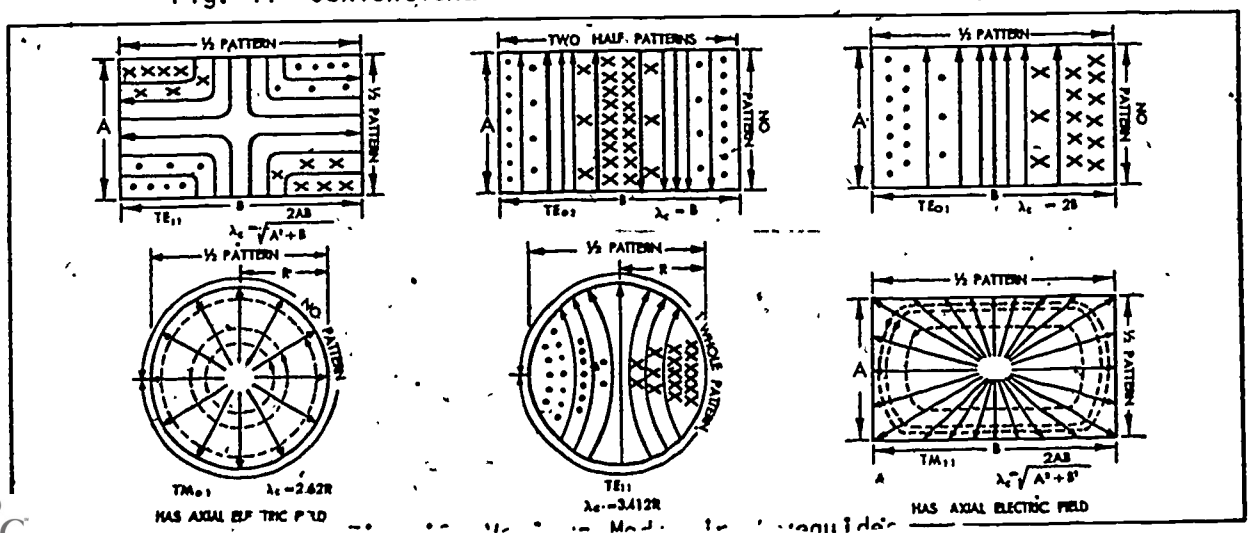

[illegible] Modes in Waveguides

Introduction: Continued

The energy moving through a waveguide is in the same form of electromagnetic radiation as that radiated from an antenna. However, the boundary conditions listed previously must be satisfied, that is, E lines cannot be tangent to the wall surface and no component of the magnetic field may be perpendicular to the wall. Referring to Fig. 13 a & b, it can be seen that both these conditions would be present if the pattern was exactly as a radiated signal from an antenna. Under the conditions pictured the E field will be shorted out and the H field cannot exist because it is not a closed loop.

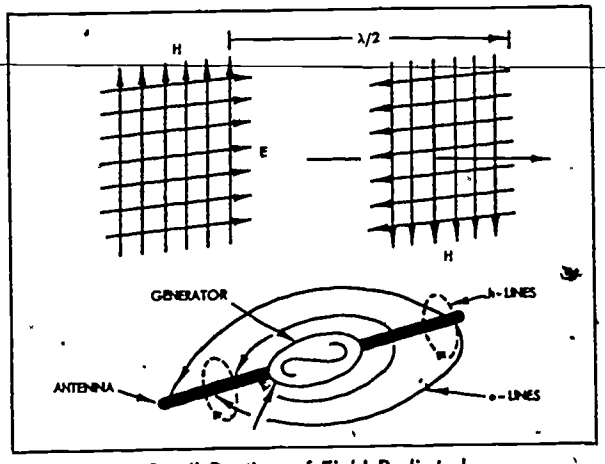

Small Portion of Field Radiated into Space by an Antenna

Fig. 13a

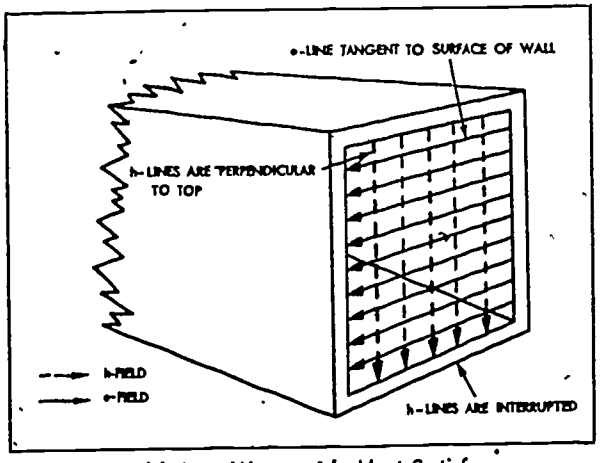

Fields in a Waveguide Must Satisfy Boundary Conditions to be Radiated

Fig. 13 b

Introduction: Continued

Some method is needed to introduce a signal into a waveguide and produce a radiation pattern that will travel the length of the guide. If a probe or antenna is placed within the waveguide and fed with a radio frequency current, (in the proper microwave region), alternating half-cycles radiate into the hollow waveguide in much the same manner as ripples on a pond that expand from the point where a pebble entered the water or the omnidirectional radiation pattern of a one-quarter wave vertical antenna when plotted from directly above the antenna. Some portions of these signals encounter the waveguide walls (Fig. 14) and some travel straight down the guide and are attenuated due to the conditions shown in Fig. 13b. The other signals, upon reaching the guide wall, are short-circuited and reflected 180° from their original phase as in Fig. 15. The two positive signals (solid lines) add, causing maximum voltage to appear at the center of the waveguide. Likewise, the negative signals add and where the negative and positive signals encounter each other at the walls they cancel, meeting conditions necessary for an E field to exist.

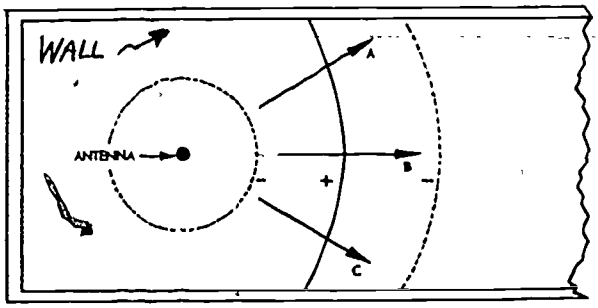

Fig. 14--How Radiation Fields are Made to Fit a Hollow Pipe

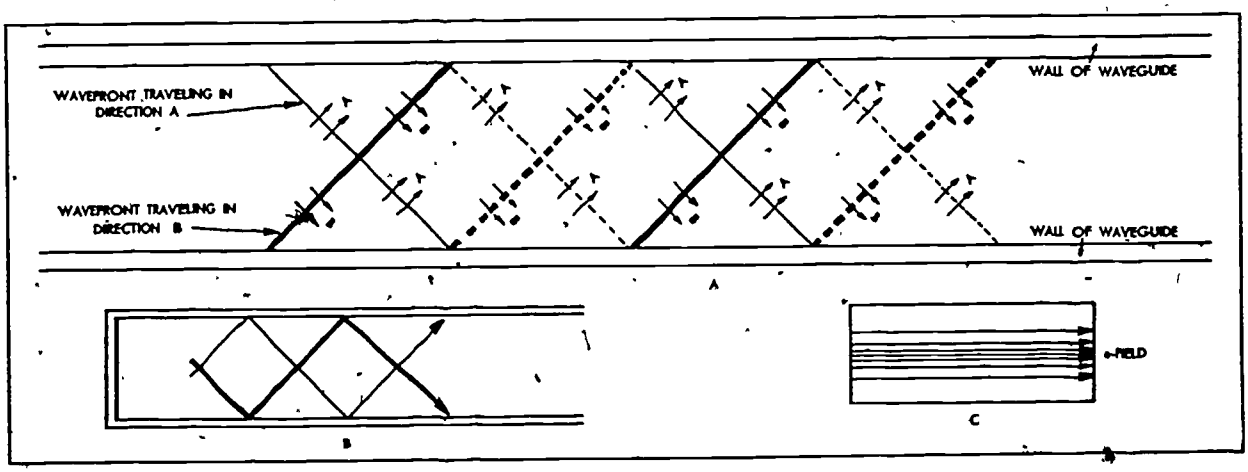

Fig. 15--Paths of Wavefronts in Waveguide

Introduction: Continued

The angle at which the wave crosses the guide is related to the wavelength and the cross sectional dimension of the waveguide. Some of these angles are depicted in Fig. 16. As the frequency gets lower, the angle of incidence increases until 90° is reached, at which time the signal bounces back and forth across the guide until the energy is lost as heat in the resistance of the walls. The waveguide at this point is one-half wavelength and the cutoff frequency has been reached.

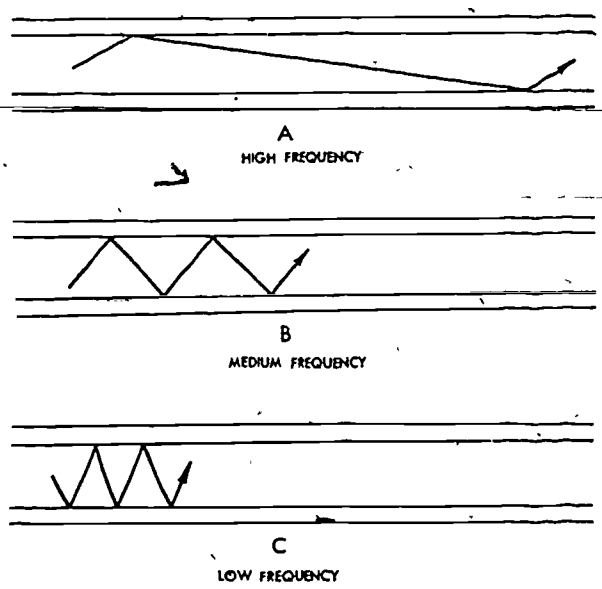

Fig. 16--Angle at which Fields Cross Waveguide Varies with Frequency

In the study of transmission lines used for two-way communications, it was found that rf energy travels through a transmission line at a speed slower than the speed of light. This is due to resistance, insulation, etc. A signal traveling through a waveguide also travels slower than the speed of light but not necessarily due to the same reasons.

The axial velocity of a group of waves is called the group velocity. The relationship of the group velocity to diagonal velocity causes an unusual phenomenon. The velocity of propagation appears to be greater than the speed of light. As seen in Fig. 17, a wavefront (one of the waves in a guide) will move from point 1 to point 2 or a distance L at the speed of light (VL). Due to this diagonal movement (indicated by the large arrow) during this time the wavefront has moved down the guide only the distance G, which is a lower velocity. This is the

Introduction: Continued-

group velocity (Vg). If an instrument is used to detect the positions at the wall, the two positions will be apart by the distance P. This distance is greater than both L or G. The movement of the contact point between wave and the wall is at a greater velocity than the movement at L or G. Since the phase of the rf has changed over the distance P, this velocity is called the phase velocity (Vp). The mathematical relationship between the three velocities is stated by the equation $Vl = \sqrt{VpVg}$ where Vl equals the velocity of light (300,000,000 meters per second), Vp equals the phase velocity, and Vg equals the group velocity.

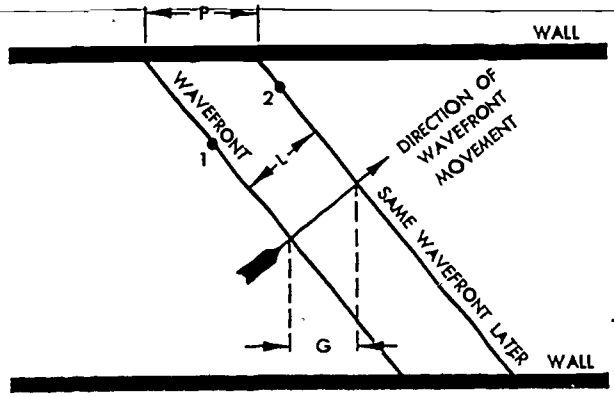

Fig. 17--Relation of Phase, Group, and Wavefront Velocity

This equation indicates that it is possible for the phase velocity to be greater than the speed of light. As the frequency decreases, the angle of crossing is more of a right angle. In this condition the phase velocity increases. For measuring standing waves in a waveguide, it is the phase velocity which determines the distance between voltage maximum and minimum. For this reason, the wavelength measured in the guide will actually be greater than the wavelength in free space. From a practical standpoint, the different velocities are related in the following manner: If the rf frequency being propagated is sine wave modulated, the modulation envelope will move forward through the waveguide at the group velocity, while the individual cycles of rf energy will move forward through the modulation envelope at the phase velocity. If the modulation is a square wave it will travel at the group velocity while the rf waveshape will move forward within the envelope. Since the standing wave measuring equipment is affected by each rf cycle,

Introduction: Continued

the wavelength will be governed by the rapid movement of the changes in rf voltage. Since the intelligence is conveyed by the modulation, the transfer of intelligence through the waveguide will be slower than the speed of light, as is the case in other rf lines.

Because of the way the fields are assumed to move across the waveguide, it is possible to establish a number of trigonometric relationships between certain factors. As shown in Fig. 18, the angle that the wavefront makes with the wall (Ø) is related to the wavelength and dimension of the guide and is equal to $\cos Ø = \lambda/2B$ where λ is the wavelength in free space of the signal in the guide, and B is the inside wide dimension of the guide. The group velocity (Vg) is related to the velocity of light (Vl) as seen in the formula

$$\frac{Vg}{Vl} = \sin Ø = \sqrt{1-\left(\frac{\lambda}{2B}\right)^2}.$$

It is also possible to measure the wavelength in the guide (λg), the wavelength in space is equal to $\frac{\lambda g}{\lambda} = \frac{1}{\sin Ø} = \frac{1}{\sqrt{1-\left(\frac{\lambda}{2B}\right)^2}}$

and further $\lambda = \frac{2B \quad g}{\sqrt{\lambda g^2 + 4B^2}}.$

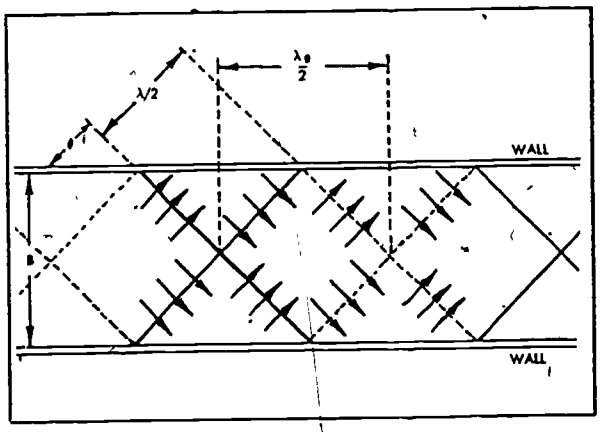

Fig. 18--Trigonometric Relations Exist between Factors Indicated

Since a waveguide may operate at any one of several modes, some system is needed to identify each of these modes. A numbering system has been devised to aid the technician in identifying the dominant mode of the waveguide. (This mode was defined earlier as the normal configuration of the electromagnetic field in a rectangular waveguide.) Any field

Introduction: Continued

configuration may be identified as a transverse electric or a transverse magnetic mode. These fields are usually designated as the TE or TM modes.

Remember, in the TE mode (sometimes called an H mode) all of the electric field is perpendicular to the length of the guide and no E lines are parallel to the direction of travel of the wave. In the TM mode, (sometimes called an E mode) the magnetic field is perpendicular to the length of the guide and no H line is parallel to the direction of propagation. In free space on a coaxial cable, both fields are perpendicular to the direction of propagation and are said to be in the TEM mode. A waveguide cannot contain the TEM mode.

To further identify the modes as patterns, numbers are placed after the letter designations. In a rectangular guide, the first small number following the letters indicates how many half-wave patterns of transverse lines exist along the short dimension of the guide through the center of the cross section. The second small number is for the number of transverse half-wave patterns that exist along the long dimension of the guide through the center of the cross section. The numbering is different for round waveguides, the first subscript indicating the number of full waves of the transverse field encountered around the circumference of the guide. The second number indicates the number of the half-wave patterns that exist across the diameter.

In Fig. 19 a TE mode is pictured in the rectangular guide (the electric lines are perpendicular to the direction of movement). Note that the intensity change is zero in the direction across the narrow dimension of the guide parallel to the E line and thus the first subscript is 0. Across the guide along the wide dimension, the E field varies from zero at the top to maximum at the center to zero at the bottom. This indicates a half-wave condition and the second subscript is 1. Thus the mode illustrated in the rectangular guide TE 0, 1.

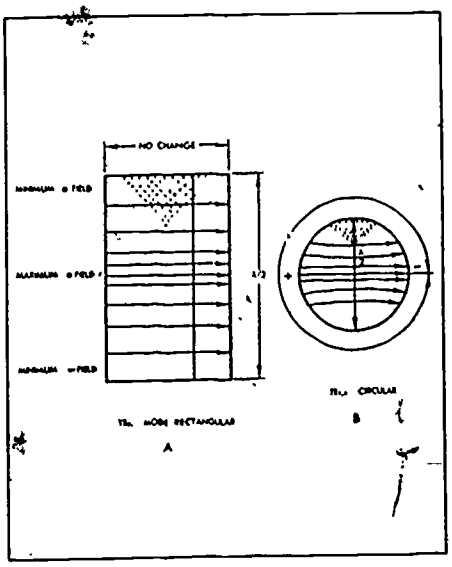

Fig. 19--How to Count Wavelengths for Numbering Modes

Introduction: Continued

In the round guide, the E field is transverse on a TE mode. Starting at the top of the figure and moving clockwise, the field goes from zero through maximum positive on the left to zero at the bottom and through maximum negative on the left to zero on the top again. This is one full wave and corresponds to the first subscript of 1. Going through the diameter starting at the top of the wall the field goes from zero to maximum in the center to zero at the bottom indicating one-half wave or the second subscript, 1. This mode then is $TE_{1,1}$. Some other patterns are possible and are shown in Fig. 12.

The previous discussion has covered what a waveguide is and modes of operation. In the next R.S.A. some waveguide devices will be the topic for study.

References:

1. Robert L. Shrader, ELECTRONIC COMMUNICATIONS, 3rd Ed., Gregg/McGraw-Hill Book Co. Read pages 638--640.

2. George Kennedy, ELECTRONIC COMMUNICATIONS SYSTEMS, 2nd Ed., Gregg/McGraw-Hill Book Co. Read pages 337--384.

Study Questions:

1. Name four waveguide shapes.

2. Name six advantages of waveguides.

3. List two disadvantages of waveguides.

4. What are the fields that are present in a waveguide when a radio frequency current flows?

5. Define "dominant mode."

6. What is a TE mode?

Job: Microwave Frequency Measurements

Objective:

The student will: (1) Measure the frequency of a microwave oscillator, (2) become familiar with the different methods used to measure microwave frequencies and the devices that are used to make these measurements, and (3) determine the wavelength of a microwave frequency in both inches and centimeters.

Job Information:

There are several methods that are used to measure the frequency of a microwave oscillator. Four of these methods will be covered in this discussion and three experiments will be included here.

The first method is probably the fastest, simplest, and most used today. This method uses a digital electronic frequency counter and consists of simply connecting the counter to some convenient point to pick up a sample of the oscillator frequency or the output frequency and then read the display. Of course, the counter must have the capabilities to read accurately in the microwave region to be measured.

The second method of measurement is still very popular, particularly in older equipment. This method uses a wavemeter with a calibrated dial that reads directly, or in some instances, may have a chart to convert a dial reading (such as a micrometer dial) to the proper frequency. This device has a resonant cavity that absorbs energy from the transmission line when it is tuned to carrier frequency. Some type of visual indicator is generally employed to let the technician know when the wavemeter is properly tuned. This may be a milliammeter and UHF diode detector attached to the cavity of the wavemeter or the crystal current meter on the transmitter. In either case, the wavemeter is tuned to resonance and the indicator current will dip indicating that the cavity is absorbing power from the circuit and decreasing the output power by some amount.

The third method is the measurement of the free-space wavelength utilizing a fixed probe in the waveguide, a horn antenna, and some type of device to reflect the transmitted signal back into the horn and thus back into the waveguide. A reference distance between the horn and the reflector is noted and the reflector is moved closer to or farther away from the horn. As the reflector is moved, an indicator will provide information relative to peaks and nulls. The distance the reflector is moved between nulls is a half wavelength of the signal in free space.

Job Information: Continued

The fourth method is the measurement of the guide wavelength utilizing a probe, a slotted waveguide section, an isolation device, and a metal plate attached to the end of the transmission line to cause a large standing wave in the waveguide. The probe is moved along the slotted line and an indicator shows peaks and nulls similar to the preceding method. Guide wavelength is measured by reading the distance between nulls (one-half wavelength) and then converted to the carrier frequency using the formula:

$$F = C \frac{\sqrt{1 + \left(\frac{\lambda c}{\lambda g}\right)^2}}{\lambda c}$$

where C equals the speed of light in centimeters (30,000,000,000 cm/sec) or 3×10^{10} cm/sec.
g equals the guide wavelength
c equals two times the large dimension of the waveguide

Example:

$$F = 3 \times 10^{10} \frac{\sqrt{1 + \left(\frac{4}{4.08}\right)^2}}{4} = 10{,}500 \text{ MHz}$$

where $\lambda c = 4$ cm
$\lambda g = 4.08$ cm

By performing the following experiments the student will become familiar with the three methods described above.

Tools, Materials, and Equipment:

1. Microwave trainer or transmitter
2. Hand tools

References:

1. Microwave transmitter manual (if you are using a transmitter rather than a trainer).

Procedure:

Wavemeter Measurements

1. Set up trainer as in Fig. 1. If you use a transmitter, it should be equipped with a resonant cavity wavemeter.

Procedure: Continued

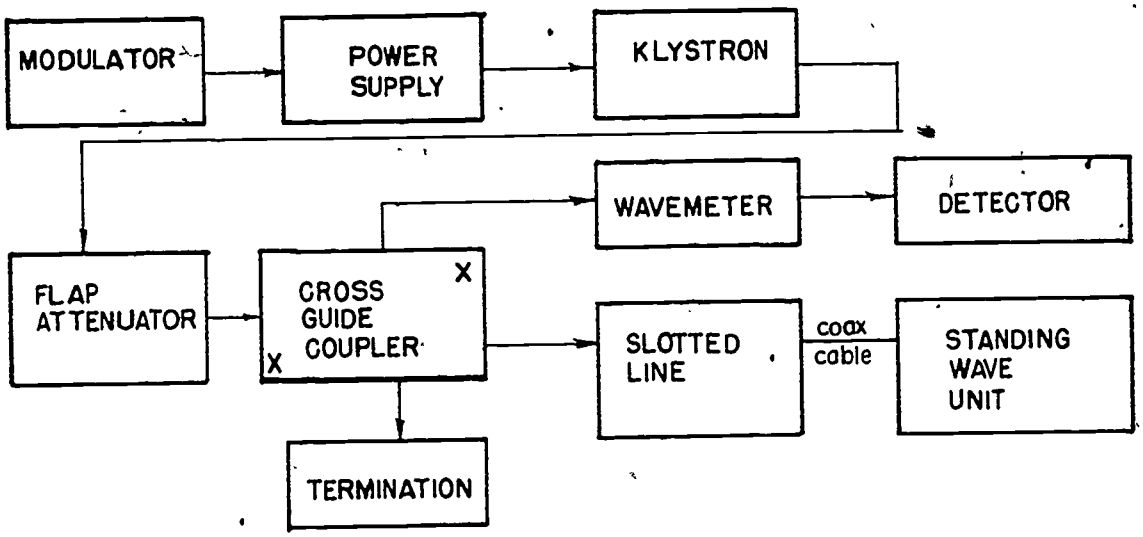

Fig. 1--Equipment Connections to Measure Frequency

2. Connect a cable from the slotted line to the standing wave unit as shown in Fig. 1. (Disregard if using a transmitter.)
3. Tune the klystron until it oscillates in a stable mode.
4. Detach the cable from the slotted line and connect it to the crystal detector. (Disregard if using a transmitter.)
5. Adjust the standing wave unit to maintain a meter reading of less than full scale.
6. Turn the wavemeter tuning control (or micrometer dial) until a dip is noted on the standing wave unit meter (or the crystal current meter of the transmitter).
   NOTE: The dip may be difficult to locate if the klystron is delivering a relatively large amount of power to the waveguide setup. Try decreasing the power by inserting the flap attenuator into the waveguide and then check for a dip. It is also possible that other modes may produce a slight dip. Look for the largest dip on the meter.
7. Approach the dip from below and above frequency carefully, noting the point of maximum dip.
8. Convert the micrometer reading to frequency using the chart supplied with the wavemeter, or in case of a direct reading wavemeter, read the frequency indicated.
   NOTE: Students using a transmitter may not be able to do the following measurements. Consult your instructor.

Procedure: Continued

Free Space Measurements

1. Connect a waveguide horn to the slotted line using the same equipment setup as in Fig. 1.
2. Attach the probe in the slotted line in such a manner as to make it stationary.
3. Position a parabolic reflector about 18 inches directly in front of the horn antenna so as to reflect the microwaves back into the horn.
4. Move the parabola in one direction or the other to produce a maximum meter reading on the standing wave unit. Mark this position as a reference.
5. Reposition the parabola closer to the horn slowly until the next maximum reading occurs. Mark this position for identification.
6. Move the parabola closer to the horn again noting the maximums as the dish approaches the horn. Erroneous readings may be obtained if the dish gets closer than about 10 inches from the antenna.
7. Measure the distances between the marks that were made at the maximums. The distance between any two adjacent marks is equal to one-half wavelength in free space.
8. Calculate the frequency using the formulas:

1) $F = \frac{30,000}{cm}$

2) $F = \frac{11,810}{inches}$

Job: Microwave Power Measurements

Objective:

The student will measure the relative power output of the microwave signal.

Job Information:

Most microwave systems incorporate the necessary capabilities to measure the relative or absolute power output of the microwave signal. Instruction books usually provide a step-by-step procedure to measure the power. In this job the measurement of relative power output of a microwave trainer will be undertaken or if the classroom has an operating microwave transmitter, the student, with the instructor's permission, may measure the power output of the transmitter.

The standing wave unit in the training kit will read the relative power output of the klystron. The meter is calibrated for both vswr and power output in dB. DB reading can be calculated using the formula dB = 20 log vswr.

Tools, Materials, and Equipment:

1. Microwave training kit
2. Hand tools
3. Standard decibel table

References:

1. Transmitter manual (if you use a transmitter rather than a trainer).

Procedure:

1. Connect trainer components as shown in Fig. 1.

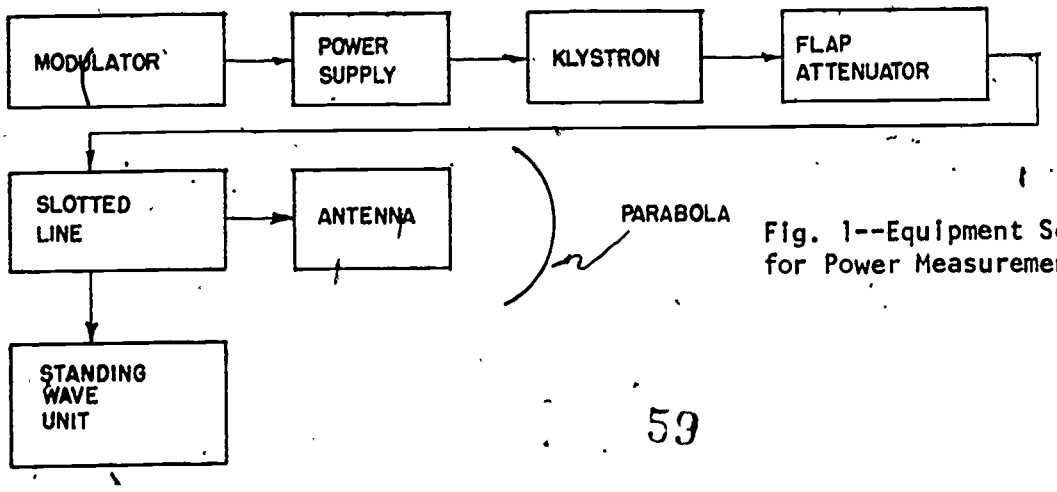

Fig. 1--Equipment Setup for Power Measurements

Procedure: Continued

2. Tune the klystron for power output on a stable mode.
3. Remove the parabolic reflector from location in front of the antenna.
4. Slide the probe on the slotted line back and forth along the line until the meter on the standing wave unit indicates a maximum.
5. Set the gain control until the meter reads full scale.
6. Slide the probe back and forth along the slotted line until the meter indicates a minimum. The meter should remain on scale and indicate a vswr between 1:1 and 3:1. Record the reading. (Record also the dB.)
7. Place the parabola in front of the antenna at a distance of about 3 inches.
8. Slide the probe along the line until a maximum is indicated.
9. Adjust the gain for a reading of 1 on the vswr scale.
10. Move the probe, noting it moves off scale to the left.
11. Turn the range switch to make the meter again read on scale. (X 10 scale)
12. Slide the probe along the line until a minimum is reached.
13. Record this reading, remembering that by changing the range switch the scale has changed by a multiplier of 10. (Example: If the reading in Step 6 was vswr = 2, and now the meter still reads 2 after moving the range switch, the vswr = 2 + 10 or vswr = 12.)
14. Note the reading taken in Step 4 when read on the "dB" scale. Record this reading.
15. Compare the readings on the "dB" scale that were made in Steps 6 and 13.
16. Calculate the relative power level of one reading over the other reading. (Use the formula provided in the information section of this job.)
17. Consult a standard decibel table for the relative gain or loss for your measurements.
18. Move the flap attenuator to several different positions and note the changes in power.

Job Questions:

1. Does the vswr change in the line as the power is increased or decreased?

2. An increase in voltage of 3 dB corresponds to a <u>power</u> increase of how many times?

3. An increase in power of 3 dB corresponds to a gain of how many times?

4. A vswr of 5 dB corresponds to a standing wave ratio of _____.

Related Study Assignment No. 6: Transmission Lines

Objective:

Upon completion of this assignment, the student will: (1) Know some devices used with waveguides for matching impedances, for terminations, and for making measurements, (2) know how waveguide sections are physically coupled for minimum loss, and (3) pass a written examination with a score of at least 75%.

Introduction:

In this R.S.A. the student will learn about some waveguide devices, how waveguides and these devices are physically connected together for minimum loss, how energy is inserted into or removed from a waveguide, how impedances are matched, and how attenuation affects the signal as it travels along inside the waveguide.

The text has several illustrations of various devices used with waveguides. These devices serve different purposes such as impedance matching, tuning, or coupling. Some variations of these are shown in Figs. 1 and 2.

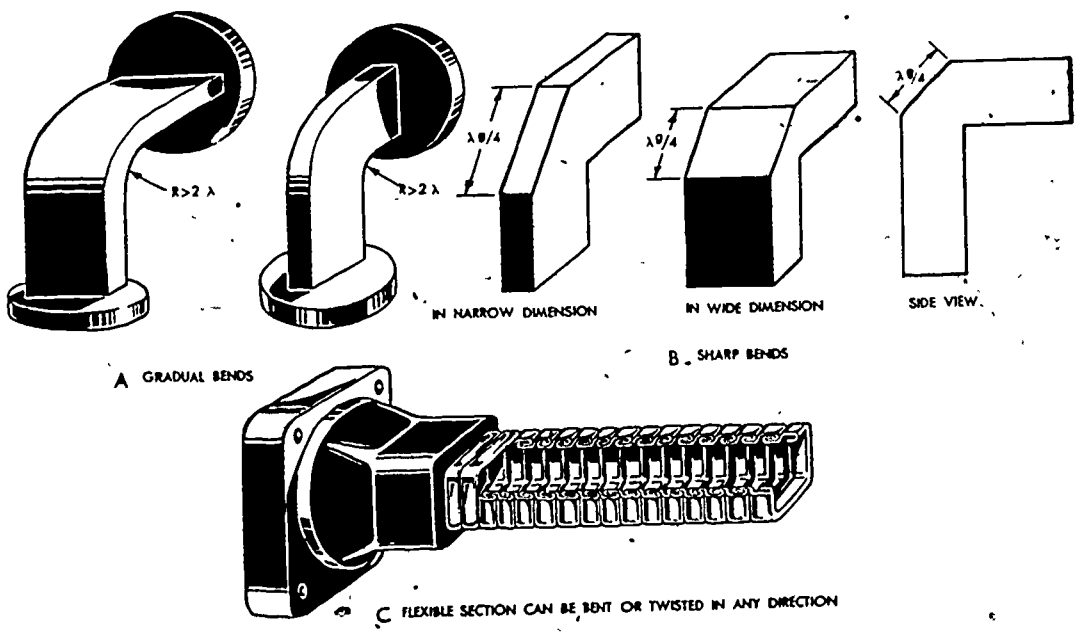

Fig. 1--Types of Bends

Introduction: Continued

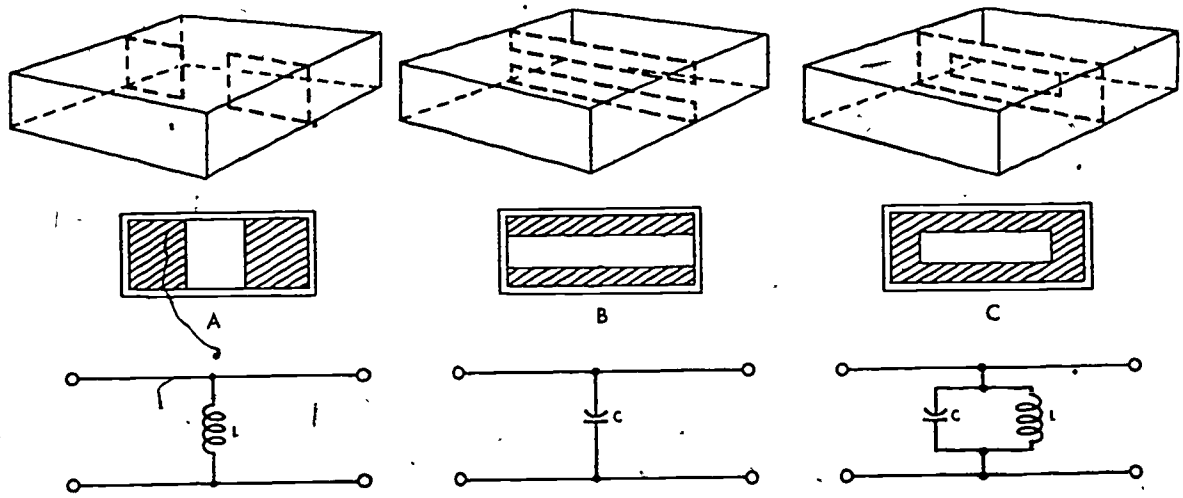

Fig. 2--Reactive Plates in Waveguide

Several methods are used to excite a waveguide, that is, rf energy must be put into or taken from a waveguide if it is to be used as a transmission line. Since a waveguide is in reality a single conductor device instead of the conventional line with two conductors, some different methods of excitation must be used to transmit or receive signals. Three such methods will be discussed.

The first method uses electric fields to excite the waveguide. If a small probe is inserted at the proper location in the guide, particularly one-quarter wavelength from the shorted end of the guide (or high impedance point) and in the center of the guide parallel to the narrow dimension, an electrostatic field is set up when the probe is connected to an rf source. This in turn sets up the electric field to excite the guide. Impedance matching, when using this method, is accomplished by varying the distance from the shorted end to the probe and also by varying the length of the probe. The amount of excitation may be controlled by reducing or lengthening the probe, moving it from the center of the E field, or by shielding it. This method is shown in Fig. 3.

The second method uses a magnetic field to excite the waveguide and uses a loop inserted into the guide as indicated in Fig. 4. This loop may be located at any one of several places as shown at C in the figure. An H field is set up using the loop, thus transferring energy to or from the guide.

Introduction: Continued

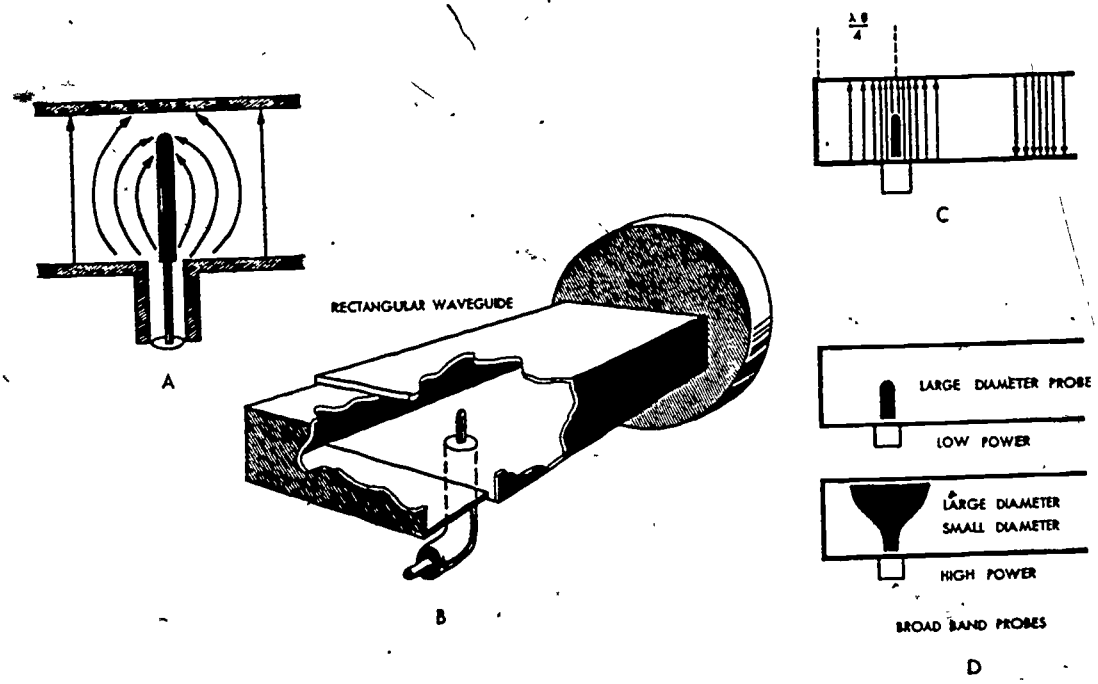

Fig. 3--Exciting the Waveguide with Electric Field

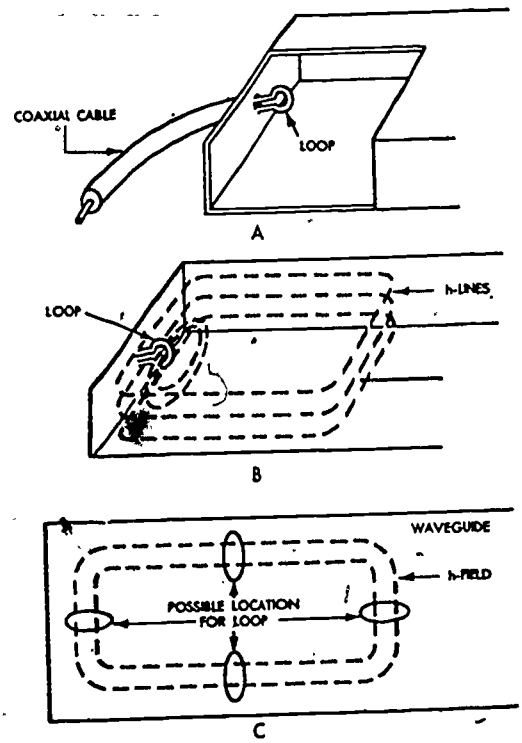

Fig. 4--Excitation with Magnetic Fields

Introduction; Continued

The third method of exciting a waveguide is the use of electromagnetic waves, Fig. 5. If a guide is left open, reflections are set up due to fields being built up around the end of the guide. If a funnel-shaped or horn antenna is attached to the guide, these reflections are eliminated or minimized since the funnel shape acts as an impedance matching device. This matches the impedance of the guide to the impedance of space. One might compare the gradual slope of the horn to that of a two-wire line that is delta-matched to a half wave dipole antenna.

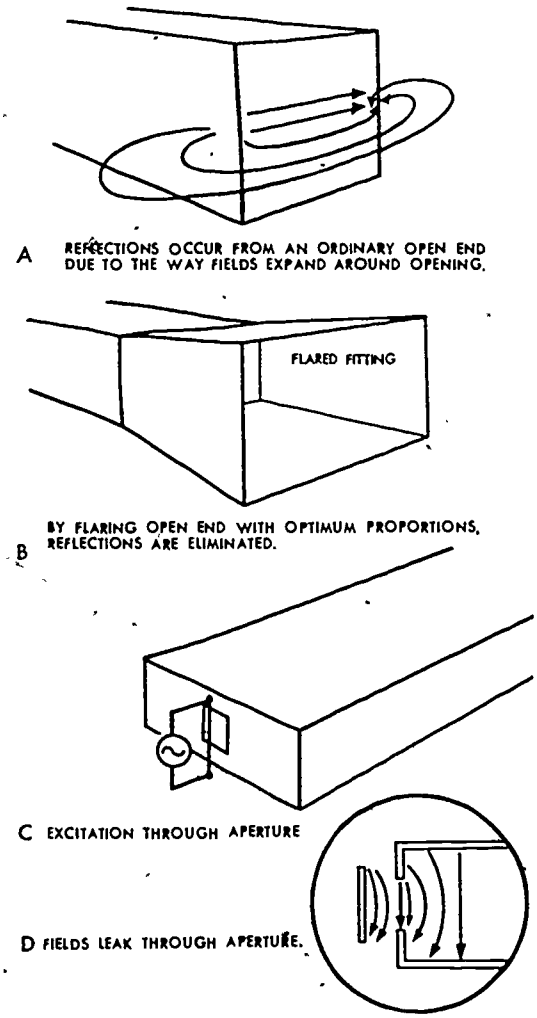

Excitation with Electromagnetic Fields

Fig. 5

Introduction: Continued

One other special method shown in the figure is the use of a small aperture and is employed when very loose coupling is desired.

In many instances it is impossible to run the waveguide in a straight line from the transmitter or receiver to the antenna. Since waveguides are usually rigid some method is necessary to change direction of the line. To keep from introducing a discontinuity that will cause reflections, these changes must be gradual. The radius of bend must have a radius greater than two wavelengths to keep reflections to a minimum.

A bend can be made in either the narrow or the wide dimension without changing the mode of operation. The bend is usually made using two 45 degree bends located one-quarter wave apart to reduce reflections. The combination of the direct reflection at one bend and the inverse reflection from the other bend will cancel leaving the fields as if no reflection had occurred.

Sometimes the use of a flexible section of waveguide is necessary such as an installation where a rigid mount is impossible. These are manufactured much like a coiled spring with a rectangular cross section with the internal dimensions conforming to the size of the rigid guide and are covered with a thick rubber coating to protect, weatherproof, and seal the guide while allowing flexibility.

On occasions it may be necessary to rotate the electromagnetic fields to align the guides for matching the narrow and wide dimensions. A twisted section of waveguide (or sometimes a flexible section) is used for this purpose. The twist, like the bend, must be gradual, usually extending over two wavelengths to minimize reflections. A twisted section is shown in Fig. 6.

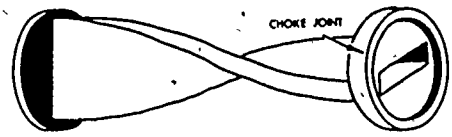

Twisted Section of Waveguide Rotates the Field with Minimum Reflections

Fig. 6

It has been discovered that in joining two sections of waveguides together, even though the guide sections are the same size and shape with the sections tightly fitted together, the joint will "leak" radio frequency energy. A solution to this problem is the choke joint. Figure 7 shows the construction of this device with one section having a flat flange and the other equipped with a slotted flange. Note the dimensions given

Introduction: Continued

for the spacing and depth of the slot. From the wall of the guide to the slot is one-quarter wavelength and from there to the bottom of the slot is one-quarter wavelength (or a total of one-half wavelength) thus producing a short. Refer to the simplified drawing in Fig. 8. This device is so effective that the sections can be physically separated by approximately 1/10 wavelength without appreciable loss at the joint. By comparison, a choke joint will have a loss of about .03 dB and a well-machined, unsoldered permanent joint (designed and installed at the factory) may have a loss of .05 dB. A rubber seal is usually placed in the joint so that the line will be made airtight and a dry gas or dry air may be used to pressurize the line for the elimination of moisture buildup in the line.

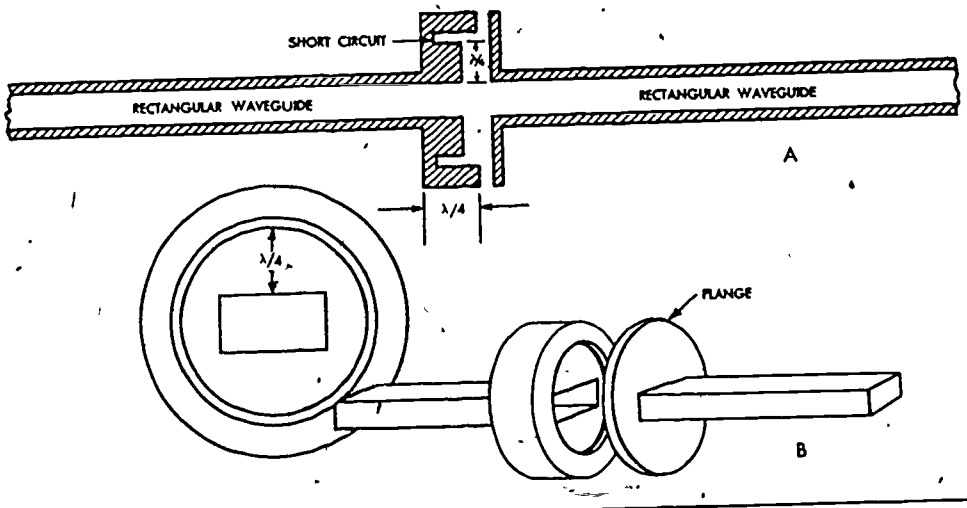

Choke Joints Keeps RF Fields Inside Waveguide

Fig. 7

MICROWAVE

Introduction: Continued

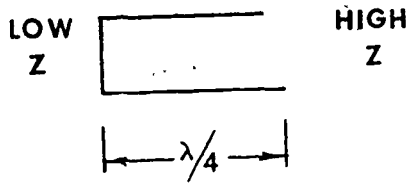

A--Impedances of a Quarter-wave Shorted Section

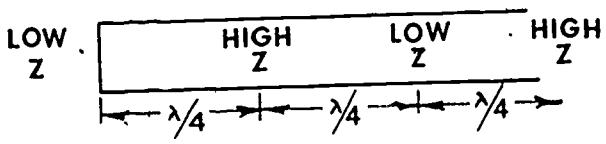

B--Impedances of a 3/4 Wave Shorted Section

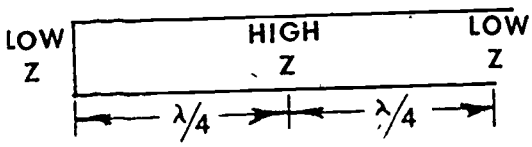

C--Impedances of Half-wave Shorted Section

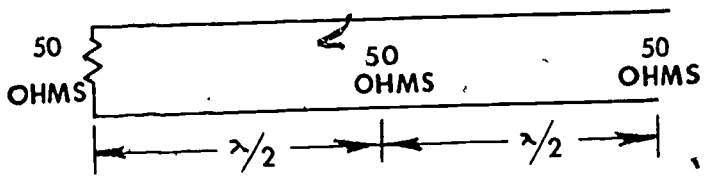

D--Terminated Full-wave Section Showing how Impedance Repeats Itself Each Half-wave Length

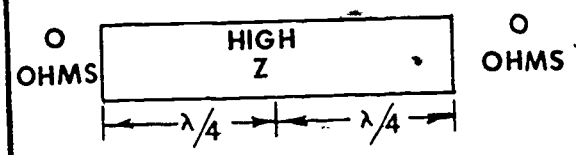

E--Half-wave Section Shorted at Both Ends

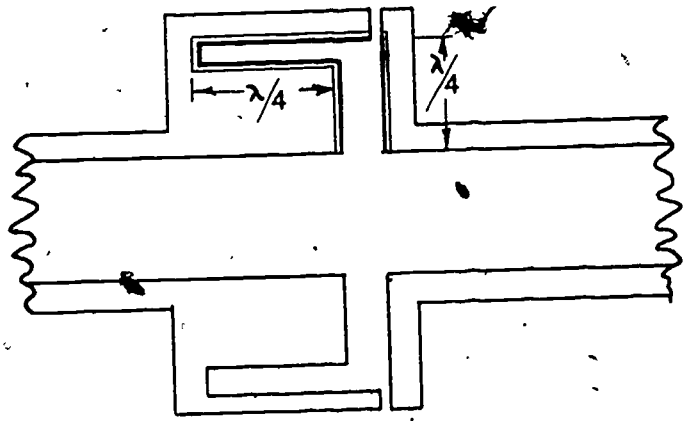

F--Simplified Drawing of Choke Joint

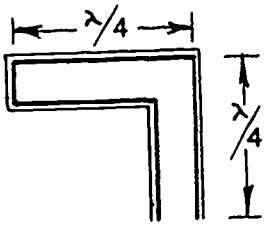

G--Equivalent Circuit (compare with "C" at left)

Fig. 8--Impedances of Waveguide Sections

FYI: (Z = Impedance) & λ = Wavelength

Introduction: Continued

A special joint, called a rotating joint, is shown in Fig. 9 and is used where a movable antenna is necessary. This would primarily apply to radar systems and these systems are beyond the scope of this lesson.

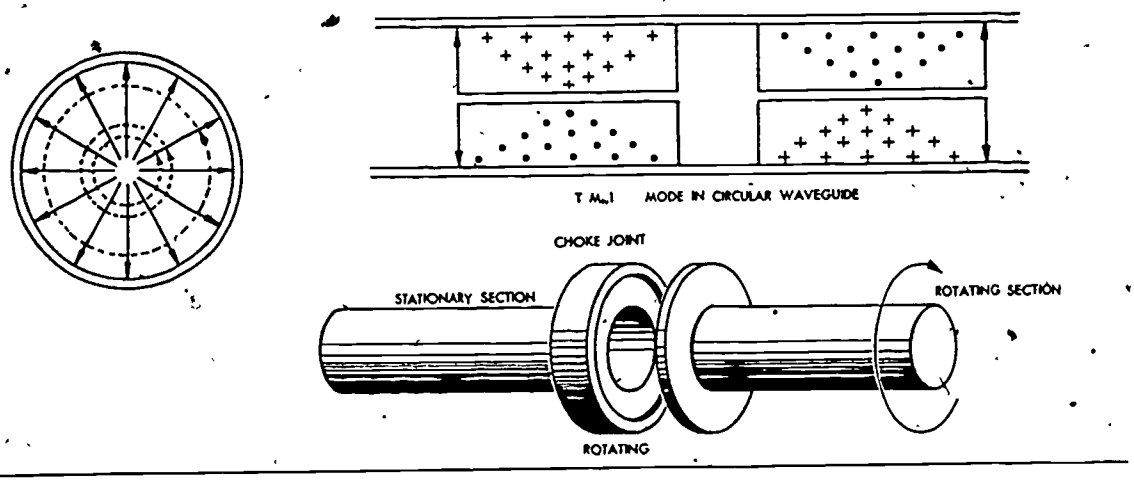

Rotating Joint and TM_{01} Mode in Circular Waveguide

Fig. 9

Sometimes it is desirable to attach one waveguide on to the side of another waveguide. Several methods of attaching these together are shown in Fig 10. Notice the configuration for the H type at the top and the E type at the bottom of the figure.

The technician is already familiar with the fact that transmission lines must be terminated into a load equal to their characteristic impedance to eliminate reflections and the waveguide is no exception. There is no easy way to define the characteristic impedance of a waveguide since it is really a single conductor. The impedance (Zo) is approximately equal to the ratio of the strength of the electric field to the strength of the magnetic field for the energy traveling in one direction. This is comparable to the voltage to current ratio (E:I) in a coaxial line with no standing waves.

A circular waveguide at its lowest impedance will be about 350 ohms. A rectangular guide may be any value. The impedance will depend on the dimensions of the guide and the frequency of the signal. It is directly proportional to the narrow dimension when the wide dimension and the frequency are fixed. The Zo may vary from around zero to 475 ohms but is normally designed to be about 50 ohms.

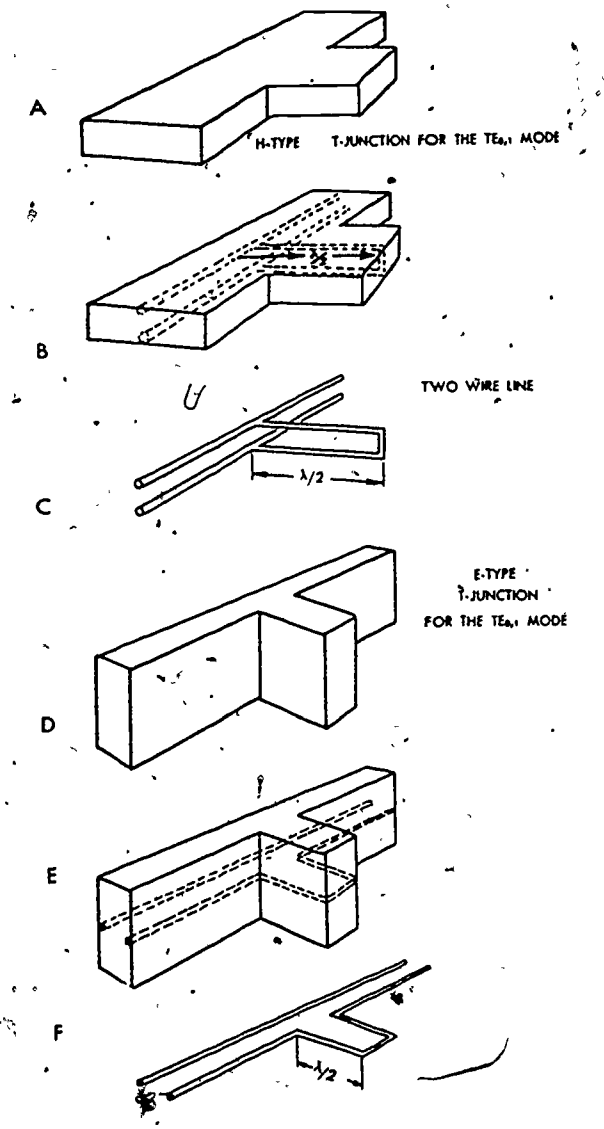

T-Junctions

Fig. 10

Several methods are used to terminate a waveguide since the guide is not easily terminated with a composition resistor as other lines are. One method is to fill the end of the waveguide with graphited sand and fields entering the sand are dissipated as heat. A high resistance rod placed in the center of the E field will dissipate heat (I^2R loss) due to the E field (voltage) causing a current to flow in the rod. A wedge placed perpendicular to the magnetic lines of force will cut the H lines. This produces current flow and the wedge, being made of a high resistance material, will dissipate heat.

Introduction: Continued

Sometimes reflections are desirable and one way to produce these reflections is to put a permanent plate on the end of the guide. A removable plate may also be used if the contact between the plate and the guide is very good. If the contact is poor, the H field will be attenuated. If the plate is placed at a point one-quarter wave from the end of the guide, (a cup is usually used) good contact is not required. The reflected field from the quarter-wave cup cancels the incident field and reflections are at a minimum (see Figs. 11 and 12).

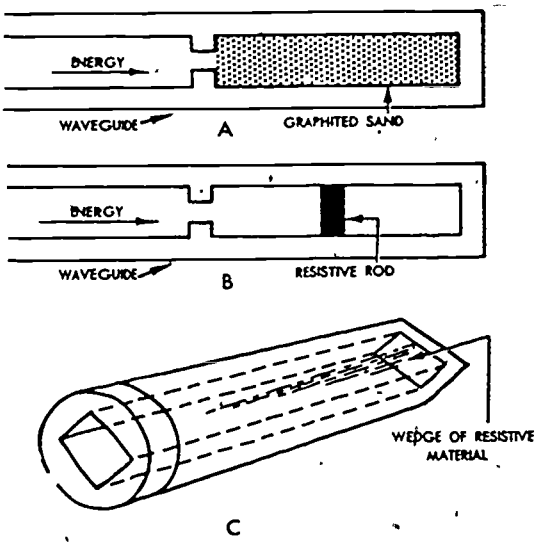

Fig. 11--Termination for Minimum Reflections

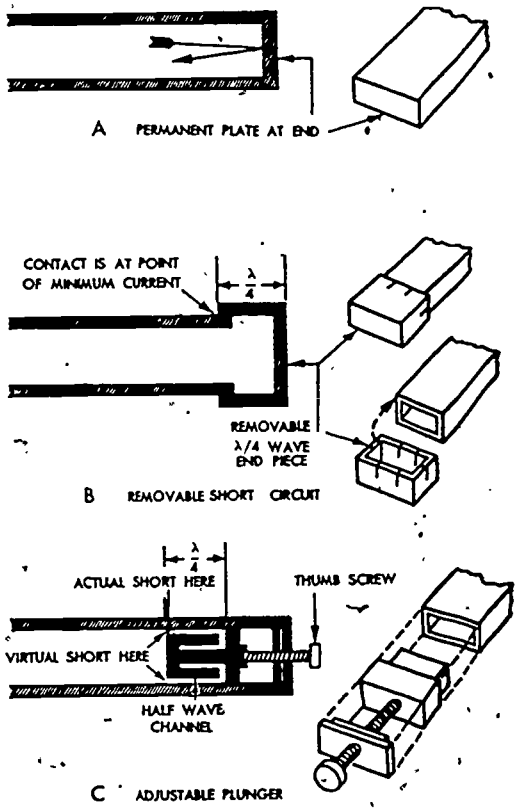

Fig. 12--Termination for Maximum Reflections

In summary, waveguides are probably the best type of microwave transmission line. They operate with different propagation characteristics than do other types of transmission lines. A thorough understanding of waveguides and the associated equipment used with them is both necessary and desirable.

References:

1. Robert L. Shrader, ELECTRONIC COMMUNICATIONS, 3rd Ed., Gregg/McGraw-Hill Book Co. Read pages 638--643.

2. George Kennedy, ELECTRONIC COMMUNICATIONS SYSTEMS, 2nd Ed., Gregg/McGraw-Hill Book Co. Read pages 337--384

Study Questions:

1. How are fields introduced into a waveguide?

2. What happens to the fields in a waveguide after they pass through a twist?

3. Describe the action of a waveguide signal as it encounters a 90 degree bend (as to reflections).

4. What is a choke joint?

5. List two ways of terminating a waveguide to minimize reflections.

Job: vswr Measurements

Objective:

The student will measure the standing wave ratio of the microwave system.

Job Information:

The technician probably is already well versed in what standing waves are, what causes them, and methods to reduce or eliminate them. In this lesson, only procedures applicable to microwave measurements will be discussed.

Waveguides, being transmission lines, must be terminated with a load equal to the characteristic impedance (Zo) of the waveguide. Reflected power is undesirable at any frequency and at microwave frequencies could be important because of the low power levels usually employed in microwave transmitters.

The vswr is related to the reflection coefficient of the microwave transmission and associated components. The reflection coefficient may be calculated using the formula

$$rc = \frac{Zl - Zo}{Zl + Zo} \quad \text{or} \quad rc = \frac{V\ \text{reflected}}{V\ \text{incident}}$$

where rc = reflection coefficient, Zl = load impedance, Zo = characteristic impedance of the transmission line, and V = voltage. The standing wave ratio (p) may be calculated using the formula

$$p = \frac{V\ max}{V\ min} \quad \text{or} \quad p = \frac{1 + rc}{1 - rc}$$

where V max is the standing wave peak voltage and V min is the minimum voltage.

The forward or incident power then is equal to

$$\text{Power forward (in \%)} = \left[1 - \left(\frac{P - 1}{P + 1}\right)^2\right] \times 100$$

and the power reflected is

$$\text{Power reflected (in \%)} = \left(\frac{P - 1}{P + 1}\right)^2 \times 100$$

Job Information: Continued

In the procedure to follow, the technician will discover that vswr is measured using a method that is different from the conventional bridge used in two way communications.

Tools, Material, and Equipment:

1. Microwave training kit or transmitter equipped with vswr measuring equipment
2. Hand tools

References:

1. Robert L. Shrader, ELECTRONIC COMMUNICATIONS, 3rd Ed., Gregg/McGraw-Hill Book Co. Pages 640--642.

Procedure:

1. Connect the equipment as depicted in Fig. 1. The box marked "X" will be designated as the particular device that will be tested. Tune up klystron. (At box "X" an open-ended waveguide will be tested so leave the slotted line open for the first measurements.)

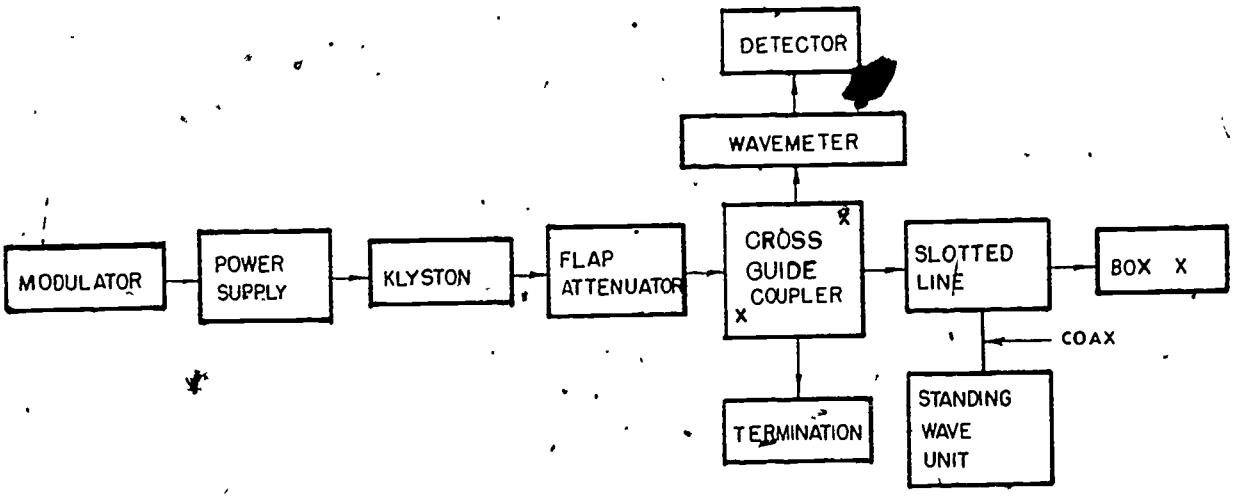

Fig. 1--Setup for Measuring vswr

2. Slide the probe along the slotted line until a maximum is indicated on the standing wave unit.
3. Record the probe position after the gain controls are set for a meter reading of 1.
4. Find a minimum by repositioning the probe assembly along the line. Write down the vswr reading and the probe position.

Procedure: Continued

5. Measure the frequency using the wavemeter and record the reading.
6. Change the klystron frequency by rotating the cavity, adjusting screw about 3/8 of one turn. Adjust the klystron for output.
7. Measure maximums and minimums again as in steps above, being sure to record slide positions, meter scale readings, and the frequency.
8. Retune klystron to some frequency as far removed from the first measurement as possible. Tune the klystron for output.
9. Repeat the previous measurements and record the results.
10. Prepare a graph showing vswr as the vertical axis and frequency as the horizontal axis.
11. Place a mismatched plate over the open end of the waveguide of the slotted line. (This plate looks like a waveguide end cover cut in half.)
12. Adjust the klystron for output.
13. Move the probe along the slotted line and locate two minimums. These should be adjacent nulls.
14. Record the positions of the nulls.
15. Measure the frequency with the wavemeter and record.
16. Write down the meter reading (in dB) of the standing wave unit beginning at one null and progressing to the adjacent null. Read the meter for each one centimeter of movement.
17. Move the probe to some other minimums, recording the readings as in Step 16.
18. Place a horn antenna at box "X."
19. Repeat Steps 2 through 10.
20. Place a slide screw tuner at box "X" (replacing the horn). Remove the probe from the tuner.
21. Repeat Steps 2 through 10.
22. Install the probe back into the slide screw tuner.
23. Turn the probe about 5 turns into the slide screw tuner. Check to see how far the probe penetrates into the waveguide. Repeat Steps Steps 2 through 10.
24. Turn the probe in about 5 more turns and repeat Step 23.
25. In each of the above measurements, plot a graph or table indicating the vswr, the percent of reflected power, and the percent of forward power. Indicate which figures are for the open waveguide, the mismatch plate, the horn, and the slide screw tuner.
26. Consult your instructor if you encountered any difficulty.

Job Questions:

1. Which reading on the slotted line is easiest to read, minimum or maximum?

2. Does the vswr remain the same as the frequency is changed?

Job Questions:

3. What did you determine about vswr when some object is placed within the waveguide (as was the probe of the slide screw tuner)?

4. Were the nulls located at the same position on the slotted line when the guide was open as they were when the line was shorted (mismatch plate)?

7

Job: Waveguide Calculations

Objective:

The student will: (1) Calculate the guide wavelength of a waveguide in inches and centimeters, (2) calculate the cutoff wavelength of a waveguide in inches and centimeters, and (3) calculate the free space wavelength of a microwave signal.

Job Information:

In the R.S.A. about waveguides it was found that there existed a relationship between waveguide dimensions and the frequencies that would pass through these lines. To better acquaint the student with the calculations that determine the dimensions and the frequencies involved, this job will assign values and ask that you calculate the answers.

In review, guide wavelength is the resultant of two electric fields traveling along a rectangular waveguide at some angle to each other when an electromagnetic wave is transmitted down a guide in the dominant mode.

The cutoff frequency is the value at which the waveguide dimensions prevent propagation of a signal of lower frequency. The cutoff wavelength is the dimension of the cutoff frequency.

The free space wavelength is the dimension occupied by the transmitted signal as it propagates through space..

The following formulas are applicable to your calculations.

$$\lambda g = \frac{\lambda fs}{\sqrt{1 - \left(\frac{\lambda FS}{\lambda CO}\right)^2}}$$

where g = guide wavelength
fs = free space wavelength
co = cutoff frequency

$$fs = \frac{300{,}000{,}000}{fhz}$$

where fs = free space wavelength
300,000,000 = speed of radio wave in space (in meters)
fhz = frequency of the signal in space.

Job Information: Continued

or

$$\lambda fs = \frac{300}{fMHz} = \text{wavelength in meters}$$

or

$$\lambda fs = \frac{300}{fMHz} \times 100 = \text{wavelength in centimeters}$$

To calculate the free space wavelength in inches:

$$\lambda fs = \frac{11810}{fMHz}$$

To calculate the cutoff wavelength:

$$\lambda co = \frac{2a}{\sqrt{(m^2) + (m\,\frac{a}{b})^2}}$$

where a = wide dimension of the waveguide (in cm)
b = narrow dimension of the waveguide (in cm)
m = first subscript of the mode
n = second subscript of the mode

For the $TE_{1,0}$ mode

$$\lambda co = 2a$$

Tools, Material, and Equipment:

1. Pencil
2. Paper
3. Slide rule (or calculator)

Procedure:

1. Calculate the free space wavelength of a microwave signal whose frequency is 11,125 MHz. State the wavelength in both centimeters and inches.
2. Calculate the cutoff wavelength of the guide in Step 1 if the waveguide is .88 inches wide and .39 inches across the narrow dimension and the mode is TE1,0. (cm and inches)
3. Calculate the cutoff frequency of the guide if the waveguide is 1.4 cm by .6 cm (TE 1,1 mode).
4. Calculate the guide wavelength of the signal in Steps 1 and 2. (cm and inches)
5. Calculate the frequency of a signal whose wavelength is 3.15 cm.
6. Turn answers in to the instructor.

Job: Matching Impedances in Microwave Systems

Objective:

The student will: (1) Adjust the training kit components to minimize the vswr and (2) name several methods of matching impedances in a microwave system.

Job Information:

The purpose of matching impedances in any transmission system is to insure the maximum transfer of power from one point in the system to another point. Impedance matching becomes necessary when the characteristic impedance of a generator (in this case, a microwave oscillator) is not the same as the impedance of the transmission line or the antenna is a different impedance than that of the line.

Several methods are discussed in the R.S.A. and schematics or pictorials of some impedance matching devices are included in the R.S.A.

By using a slide screw tuner in this job, the student can demonstrate one method of impedance matching to reduce vswr. This device can be made to produce a reflected signal that is 180 degrees out of phase with the original reflection. As already known, two signals of equal magnitude and 180 degrees out of phase will cancel.

The probe on the tuner can be made to exhibit capacitive reactance or inductive reactance by changing its depth in the waveguide. Phase can be controlled by moving the probe in a longitudinal direction.

Tools, Material, and Equipment:

1. Microwave training kit
2. Hand tools

References:

1. Robert L. Shrader, ELECTRONIC COMMUNICATION, 3rd Ed., Gregg/McGraw-Hill Book Co. Pages 640--642.

Procedure:

1. Set up equipment as shown in Fig. 1.

Procedure: Continued

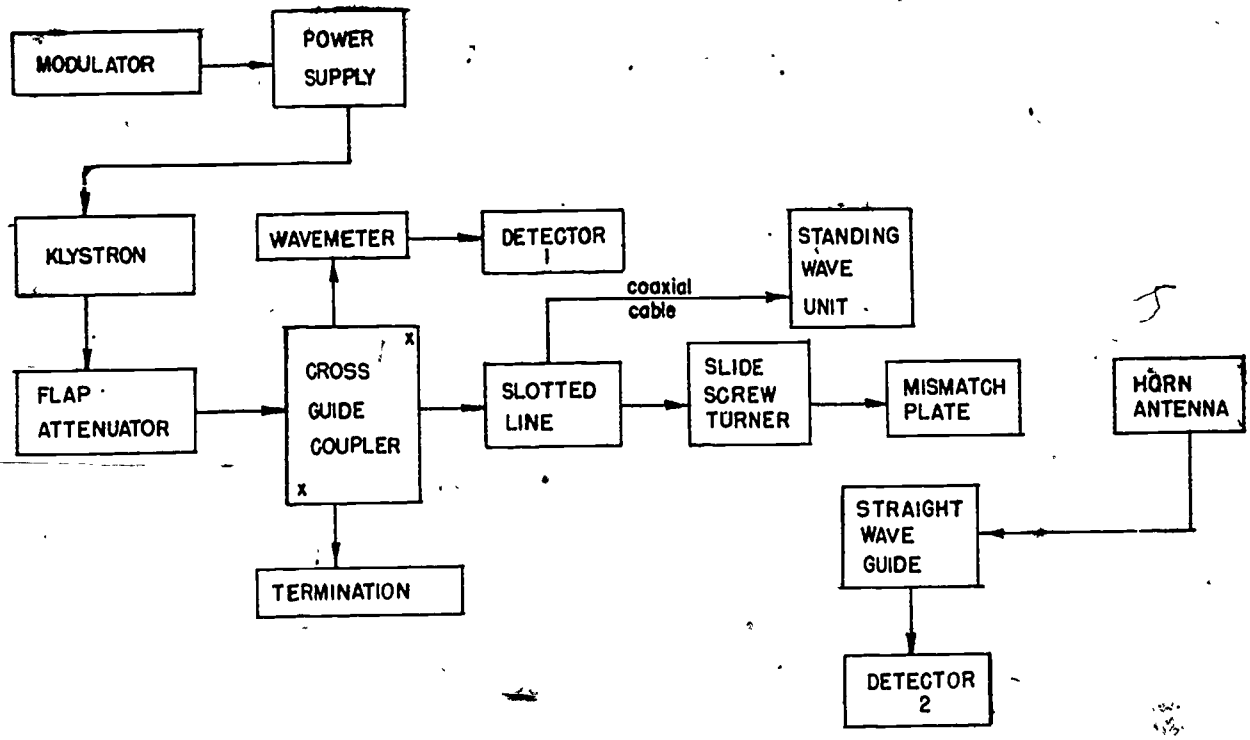

Fig. 1--Equipment Connections--Impedance Matching

2. Mount the mismatch plate (the waveguide end cover plate) at the position marked "mismatch." Remove the probe from the slotted lines.
3. Turn on klystron and tune for power output.
4. Measure and record frequency and vswr.
5. Disconnect the coaxial cable from the slotted line and attach it to the second detector.
6. Locate the horn antenna about 24 inches away from the mismatch plate and in line with it to receive a signal.
7. Read and record the received signal as indicated by the vswr unit meter.
8. Replace the probe in the slotted line.
9. Move the probe back and forth along the slot and up and down into the waveguide until a maximum is located. Several such positions may be found.
10. Change the coax back to the slotted line.
11. Read and record vswr.
12. Change probe position and depth to locate the lowest vswr and record this reading.
13. Retune the klystron to another frequency somewhere near the opposite end of the band from where it is now operating.
14. Measure and record the frequency.
15. Read and record the vswr without moving the slide screw tuner or probe.

Procedure: Continued

16. Unscrew the probe completely and measure and record the vswr.
17. Prepare a chart from the preceding measurements. List each frequency and the vswr measured at each different procedure.
18. Calculate the percentage of reflected power for each step.

Job Questions:

1. Did inserting the probe into the line change the vswr?

2. Did the vswr change when frequency was changed?

3. Why is it necessary to match the impedances of the devices used in a microwave transmission system?

Job: Microwave Attenuation Measurements

Objective:

The student will: (1) Demonstrate how a microwave signal can be attenuated and the effects of attenuation and (2) measure attenuation in a microwave system.

Job Information:

Attenuation or the reduction in quantity of a signal may be of two types--wanted or unwanted. Attenuation may occur in devices within the system due to design of the equipment and must be overcome with increased gain in the amplifiers. Sometimes attenuators are placed in the system to control the output power of various stages.

An example of intentional use of an attenuator is the insertion of a rod into the waveguide to drastically reduce the radiated energy of the microwave transmitter. This is used to advantage in "hot standby" circuits equipped with a waveguide switch where the spare transmitter is terminated into a dummy load. If the "on-line" transmitter must be taken out of service without turning it off, the output is attenuated so much as to effectively cut off radiation of energy.

Some other uses of attenuators are isolation of one device from another and matching using lossy material.

Of course, some attenuations cannot be eliminated. These are heat loss due to skin effect within the guide (I^2R loss), losses due to reflections, mismatches, and absorption losses.

These losses can be calculated in watts or in decibels using the same formulas that apply to other types of gain or loss. (Example:
$Db = 10 \log \frac{\text{power in}}{\text{power out}}$ or $dB = 20 \log \frac{\text{voltage in}}{\text{voltage out}}$ or $dB = 20 \log \frac{I \text{ in}}{I \text{ out}}$.
Power (in watts) = I^2R, etc., can be used to calculate input and output power and the difference is the amount of loss.

Attenuators may be constructed using a rod or screw, wedge of conducting material, or by the use of absorptive material and properly fitting these to a waveguide. A waveguide itself may be used as an attenuator. If the physical size of the guide is such that it offers high opposition to the passage of energy, it will cause a loss. This guide is usually operated at a wavelength below its cutoff frequency. An illustration of this method is shown in Fig. 1.

Job Information: Continued

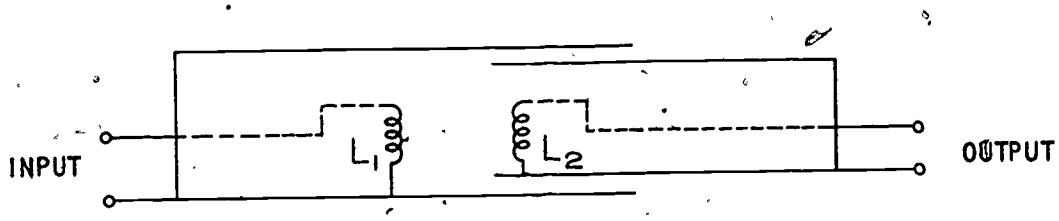

Fig. 1--Waveguide Attenuator

The waveguide is operated at frequencies greater than cutoff and the output is varied by changing the coupling (distance) between the two coils.

Tools, Material, and Equipment:

1. Microwave trainer
2. Hand tools

References:

1. Robert L. Shrader, ELECTRONIC COMMUNICATIONS, 3rd. Ed., Gregg/McGraw-Hill Book Co. Pages 640--642.

Procedure:

1. Connect microwave components as shown in Fig. 2, terminating the setup with the half-shorting plate.

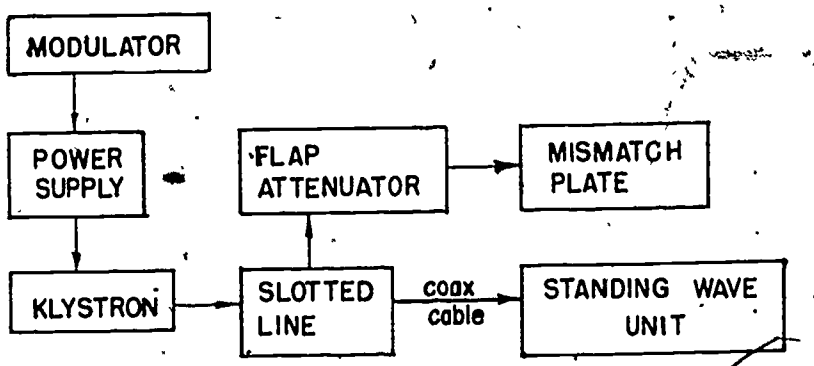

Fig. 2--vswr Attenuation Measurements

2. Adjust flap attenuator for minimum.
3. Measure vswr.
4. Begin a chart by recording the reading in Step 3.

Procedure: Continued

5. Adjust flap attenuator for maximum insertion into the guide and record the vswr.
6. Set the attenuator at its mid-position. Read vswr.
7. Change the equipment to the connections shown in Fig. 3.

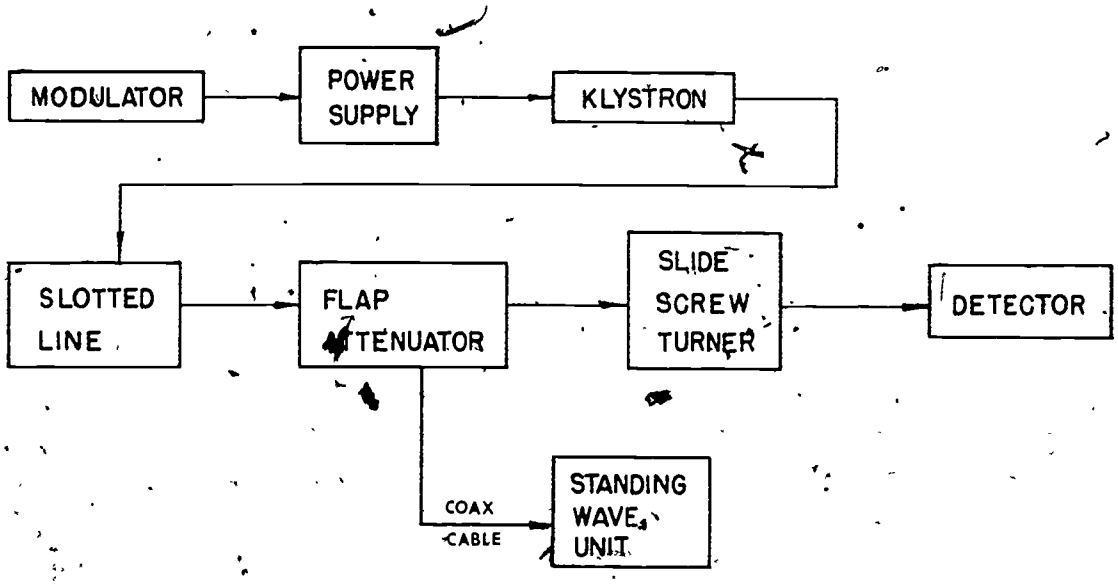

Fig. 3--Insertion Loss Measurements

8. Set flap attenuator to minimum.
9. Set slide screw tuner probe for minimum insertion into the guide.
10. Measure and enter in the chart the vswr.
11. Measure the output in dB by connecting the coaxial cable from the standing wave unit to the detector.
12. Adjust the slide screw tuner for maximum power output (dB) and lowest vswr (impedance match). Enter these in the chart.
13. Adjust the standing wave unit gain controls to read 0 dB.
14. Read the loss when the flap attenuator is adjusted to minimum, mid-position, and maximum insertion. These readings are minus levels (dB below 0 level).
15. Readjust the flap attenuator and the slide screw tuner probe for minimum.
16. Move the slide screw tuner to obtain the same vswr as encountered in Step 12. Enter the power (in dB) at the detector.

Job Questions:

1. How much power loss in dB was there from minimum flap insertion to maximum?

Job Questions: Continued

2. Name several devices that are used as attenuators.

3. Name some attenuations present in the system that connot be adjusted.

Related Study Assignment No. 7: Detectors and Mixers

Objective:

Upon completion of this assignment, the student will: (1) Know the characteristics of a silicon crystal diode, (2) know the uses of a silicon crystal diode, and (3) be required to pass a written examination with a score of at least 75%.

Introduction:

It has been found that at microwave frequencies the regular germanium or vacuum tube is not a good quality mixer due to noise, frequency response, and losses. One of the best types of mixers and detectors is the silicon crystal diode designed for microwave uses.

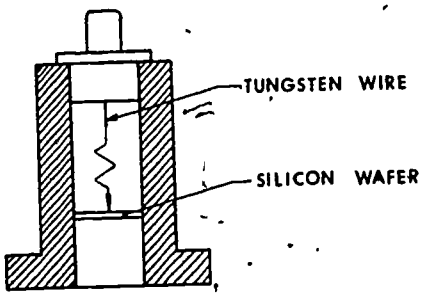

Fig. 1--Silicon Crystal Diode

Its basic construction consists of a pointed wire, made of tungsten, making contact with a silicon wafer. The equivalent circuit is shown in Fig. 2 and the voltage-current curve of a typical unit is shown in Fig. 3. As in other point-contact diodes, rectification takes place at the junction of the wire and wafer.

The crystal mixer is used basically to heterodyne the microwave signal down to a lower value where more conventional circuits are employed as amplifiers, detectors, or automatic frequency controls. However, certain conditions must be met to assure the best operation of the crystal mixer. First of all, the impedance of the crystal mixer and the signal source must be fairly well matched so that the crystal will

Introduction: Continued

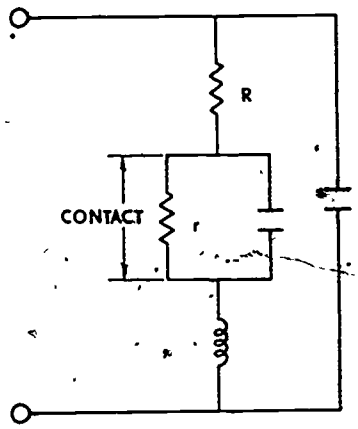

Fig. 2--Equivalent Circuit of a Silicon Crystal Diode

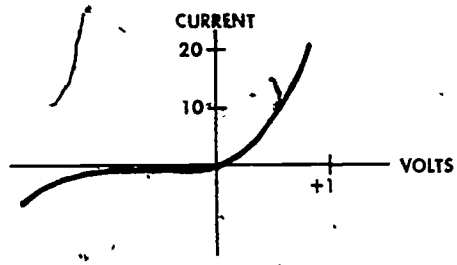

Fig. 3--Characteristic Curve of Current vs Voltage of a Typical Silicon Crystal Diode

absorb maximum power from the source. At the same time the signal source must be prevented from being injected into other parts of the circuit. The tuned circuit that the crystal works into must also be matched to the crystal output impedance. Both input and output impedances of the crystal are very low (in the order of a few hundred ohms) and these impedances are themselves dependent on the amplitude of the local oscillator signal.

Some power is lost in the signal conversion process when using the crystal mixer to produce an intermediate frequency and this loss is called the conversion loss. Typical values of signal are 6 to 10 decibels. This loss will decrease if the local oscillator signal amplitude is increased.

Noise output of the crystal is of concern also. The circuit must be designed to give the maximum output signal obtainable while keeping noise figure at the lowest level. This usually results in a compromise that will give a rectified output of .3 to 1 mA of current or a power of about 1 mW of power that is absorbed by the crystal from the local oscillator.

These crystals are designed to work in circuits operating from 1000 MHz to 25,000 MHz and above. In addition to serving as mixers they can provide an indication on a milliammeter with the rectified output current being proportional to the square of the effective value of the signal voltage, thus making it a square-law detector. This means, then, that the DC developed by the rectified current is very useful in the measurement of microwave power output. The accuracy of the measurement of an amplitude modulated signal is limited by the fact that the

Introduction: Continued

amplitude of the signal is constantly varying during the modulation process. Accuracy is also affected by the quantity of input signal. If the signal is too large the response of the crystal changes, causing an erroneous indication. Other factors affecting the output are: (1) The frequency of the signal, (2) types of crystal (even two crystals with identical part numbers can give different reading if placed in the same circuit), (3) amount of bias placed on the crystal (this also changes the noise figure), and (4) resistance of the audio load.

To find if the crystal under test is relatively close to the square-law value, certain measurements can be performed and the value of the exponent calculated using the equation

$$N = \frac{.22}{D/\lambda g - .141}$$

where N = exponent of V (law of the crystal)
D = distance between 2 adjacent "half of maximum current" points (3 dB point on a square-law meter)
g = guide wavelength

since voltage and current of the crystal are related. This relationship can be calculated using the equation $I = CV^N$. In a passive device such as a resistor, this would be equivalent to $V = IR$ if $N = 1$ and $C = \frac{1}{R}$.

Some of these measurements will be made in the job associated with this R.S.A.

References:

1. Robert L. Shrader, ELECTRONIC COMMUNICATIONS, 3rd. Ed., Gregg/McGraw-Hill Book Co. Read pages 642--643.

2. George Kennedy, ELECTRONIC COMMUNICATIONS SYSTEMS, 2nd Ed., Gregg/McGraw-Hill Book Co. Read pages 397--400.

Study Questions:

1. What is a square-law detector?

2. What are some of the factors that affect the output of a silicon crystal diode?

3. On what frequencies do silicon crystal diodes usually operate in microwave equipment?

Job: Detecting Microwave Signals

Objective:

The student will: (1) Demonstrate detection of microwave signals, and (2) use a crystal (a square-law device) for detection of microwave signals.

Job Information:

For information to be useful, it is necessary that the data impressed upon the transmitted carrier wave be removed from the carrier and returned to its original form. Also some method is needed to determine if the microwave signal itself is present.

Several methods of detection are available. The best method available uses a silicon crystal diode and is the type of crystal detector used in this job. The diode will rectify the microwave signal and provide a DC meter with current to indicate that a signal is present. The current will depend upon the quantity of microwave power available to be detected. The crystal will also demodulate the microwave signal if used in the proper circuit configuration. The system used in these original jobs is of the demodulator type of indicating device fed from a crystal mixer.

Tools, Materials, and Equipment:

1. Microwave trainer
2. Hand tools

References:

1. Robert L. Shrader, ELECTRONIC COMMUNICATION, 3rd Ed., Gregg/McGraw-Hill Book Co. Pages 642--643.

Procedure:

1. Set up equipment as shown in Fig. 1.
2. Tune the klystron for a stable mode.
3. Peak all equipment for maximum output.
4. Find a voltage maximum on the slotted line by adjusting the probe back and forth along the slotted line.
5. Adjust the flap attenuator to mid-range.
6. Turn the amplifier gain control for maximum gain.

Procedure: Continued

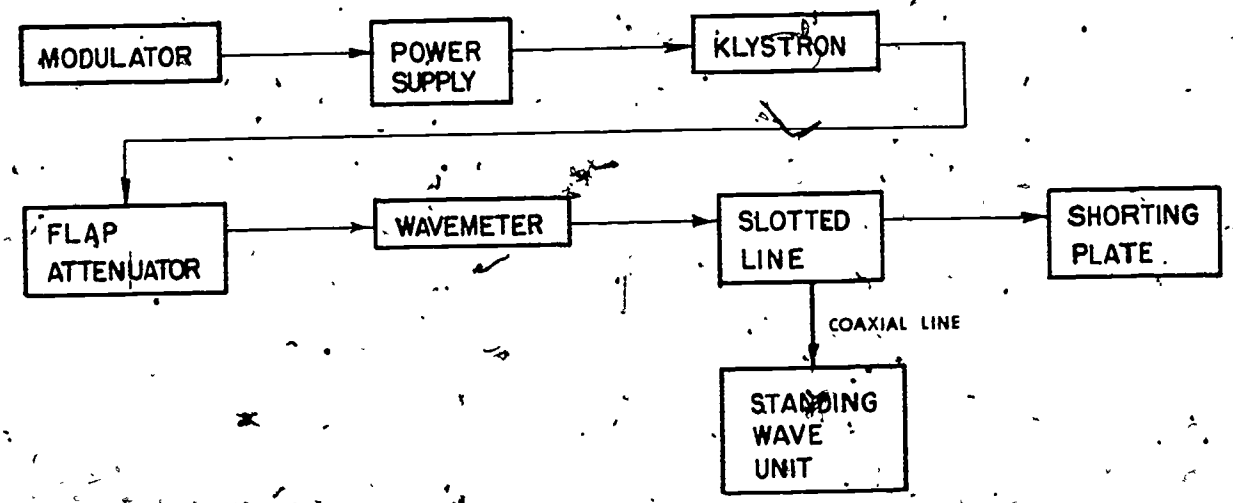

Fig. 1--Microwave Detector Setup.

7. Move the step switch on the standing wave unit until a meter reading is obtained (x 30 scale). If the meter reads too high on this scale, unscrew the probe on the slotted line to reduce the signal.
8. Set the probe into the guide to produce a zero reading as read on the dB scale (x 30 scale) when the slotted line probe is moved to a voltage maximum.
9. Establish the guide wavelength by measurement and record.
10. Find both 3 dB points (one each side of the probe position) by moving the probe in one direction to reduce the signal 3 dB then back the other direction past 0 to the 3 dB down position. Record all 3 probe positions using the centimeter scale.
11. Calculate the distance between the two 3 dB positions. This represents the distance between the half maximum current points.
12. Set the standing wave unit to the x 20 scale and repeat Steps 8 through 11.

Job Questions:

1. Using the formula $N = \frac{.22 D}{\lambda g} .141$

   where N = law of the silicon crystal
   D = distance calculated in Step 11
   λg = guide position measured in Step 9,
   calculate the power for the X 20 and X30 scales of the meter.

2. Does the crystal conform to the square-law in both sets of measurements?

Job: Directional Couplers

Objective:

The student will: (1) Demonstrate the characteristics of a directional coupler and (2) measure the directional properties of a directional coupler.

Job Information:

Directional couplers are used to monitor the information traveling along a transmission line or to measure the forward or the reflected waves in the waveguide without upsetting the transmission of energy within the system. It may also be used for other purposes if the need arises.

Figures 1a, 1b, and 1c show three types of directional couplers and Fig. 2 will identify the coupler that will be used in the procedure. This device is sometimes called a cross guide coupler.

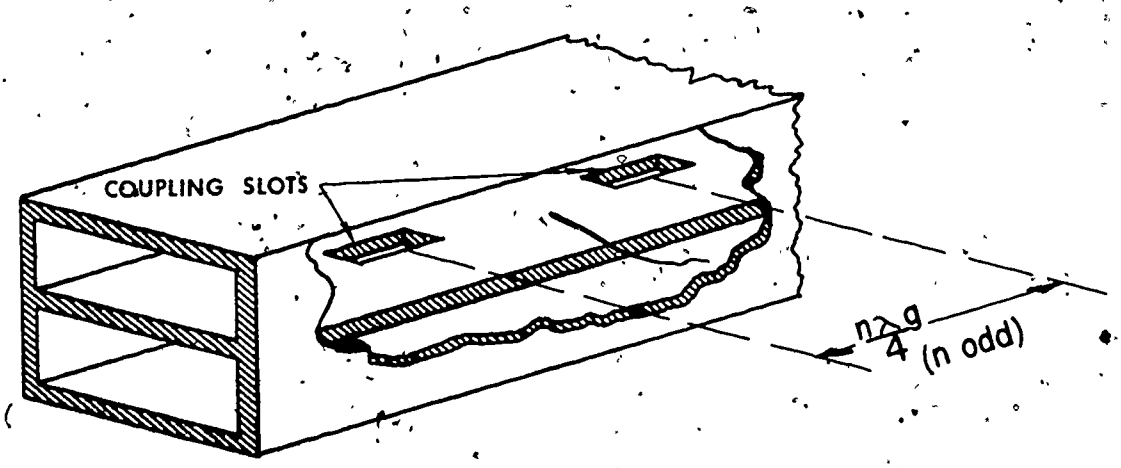

Fig. 1a

Job Information: Continued

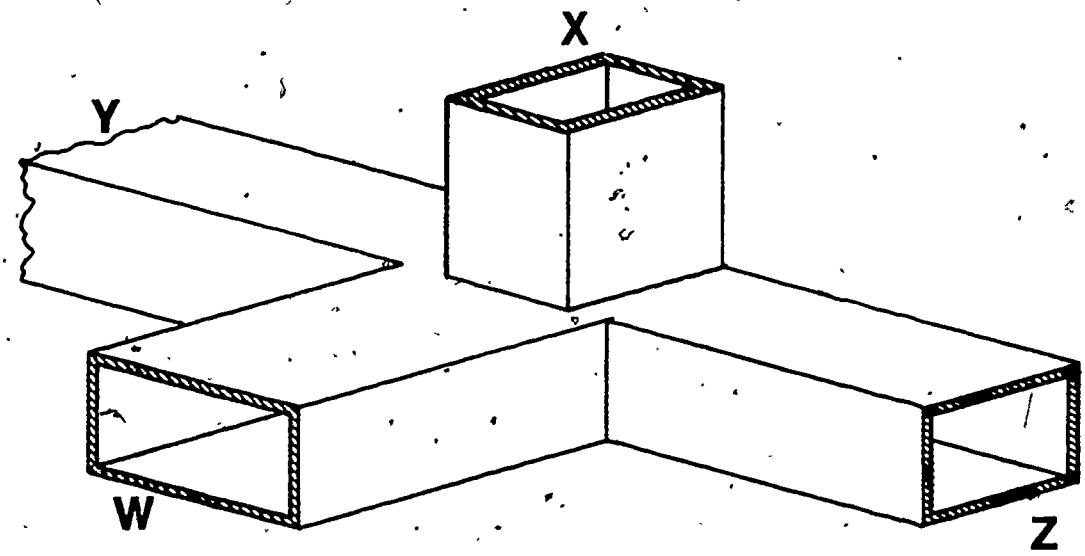

Fig. 1b

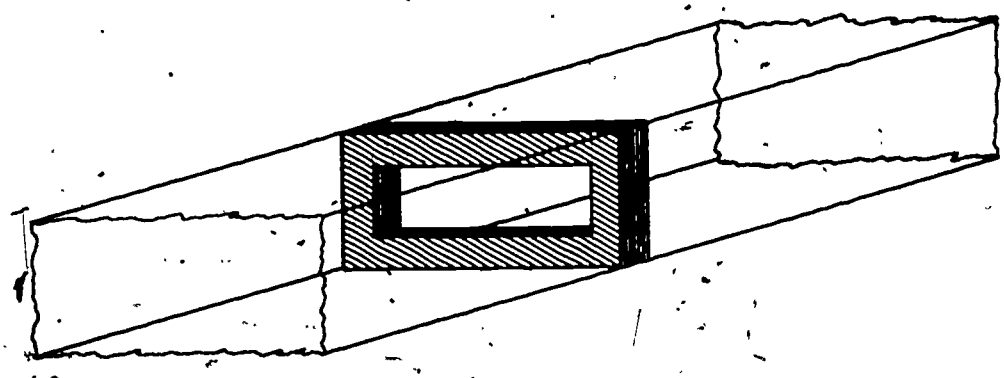

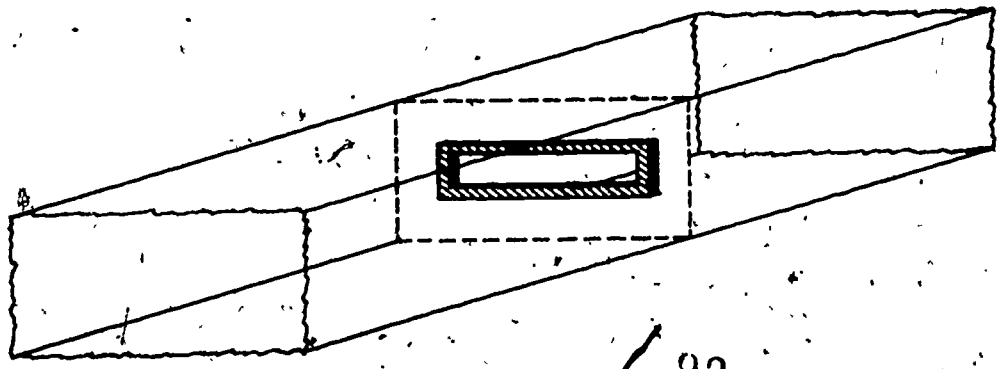

Fig. 1c

Job Information: Continued

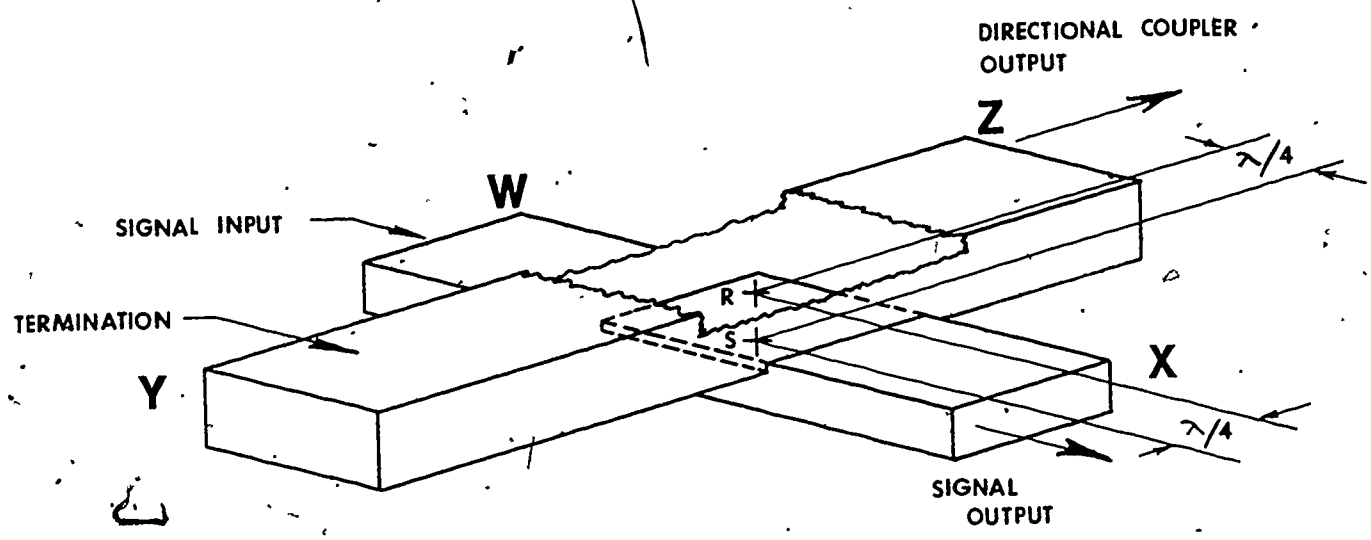

Fig. 2--Cross Guide Coupler

In Fig. Ia, a two hole coupler is depicted and this device may use either magnetic or electric coupling between the two lines. Electric coupling uses probes, magnetic coupling uses loops, or both types of coupling may use slots oriented to produce the same effects as a probe or a loop. Only one type coupling may be used at a time for the system to work, however.

A wave travels in direction 1 in line 1 and causes a signal to travel in the same direction in line 2. No wave will travel in direction 1 if the signal in line 1 travels in the opposite direction (direction 2). If a wave enters line 1 and travels in direction 2, a wave in line 2 will also travel in direction 2 but a wave in line 1 traveling direction 1 will not cause a wave in direction 2 in line 2. The spacing of the two holes must be an odd multiple of one-quarter wavelength apart in the coupler.

A device called a magic T is shown in Fig. Ib. If a signal enters at W it divides (as in a bridge circuit) into equal amounts between Y and with no signal output at X because the dominant wave cannot turn the 90 degree corner. If the signal enters at X it divides equally between Y and Z and no output appears at W. This action just described will occur if Y and Z have been terminated with the same impedance. If the terminations are different, the output at X will be in proportion to the difference between the reflected signals at Y and Z (assuming the wave enters the T at W) and the output at W will be in the same proportion if a signal enters at X.

Job Information: Continued

In Fig. 1c, two devices are shown that produce a series or parallel resonant circuit and trap or pass frequencies accordingly. The equivalent circuits are shown schematically.

The cross guide coupler shown in Fig. 2 is basically a slot type coupler as described in Fig. 1a. This is commonly called an aperture coupler and phases of the signal in the upper line tend to add or cancel as they pass through the slots. This action of cancellation or addition of phases is determined by the relative location of the slots to each other and their position within the waveguide relative to wavelength. With two waveguides crossed at right angles and magnetic coupling being used, signals fed into the upper guide through the slots R and S will be 180° out of phase with each other. After traveling toward the termination the same electrical distance, the two signals from R and S cancel (the device is not perfect so zero will not quite be attained) and in the direction opposite the termination the signals add due to the lengths of the electrical paths.

To identify some measurements that will be made in the procedure, several definitions or descriptions of different powers are:

(1) Insertion Loss--The power lost in the coupler due to skin effect and other heat losses (I^2R), reflected losses, and coupling losses (joints, etc.). The loss is calculated by subtracting the power out from the power in or in dB, 10 log $\frac{\text{power in}}{\text{power out}}$.

(2) Directivity--The power that appears as an unwanted value due to imperfections inherent to the coupler design or manufacturing tolerances. It is usually compared to the coupled power and is stated in dB, 10 log $\frac{\text{coupled power}}{\text{unwanted power}}$.

(3) Coupling--The power taken from the line to be used as a monitoring signal or sample. This is usually compared to the input signal and is expressed as dB = 10 log $\frac{\text{power in}}{\text{power coupled}}$.

(4) Isolation--The power ratio of unwanted signal to input signal expressed as dB = 10 log $\frac{\text{power in}}{\text{unwanted power}}$.

Tools, Materials, and Equipment:

1. Microwave training kit
2. Hand tools

References:

1. Robert L. Shrader, ELECTRONIC COMMUNICATION, 3rd. Ed., Gregg/McGraw-Hill Book Co. Pages 641--642.

Procedure:

1. Connect microwave training components as in Fig. 3. (The two x's, marked R and S, inside the coupler are internal slots.)

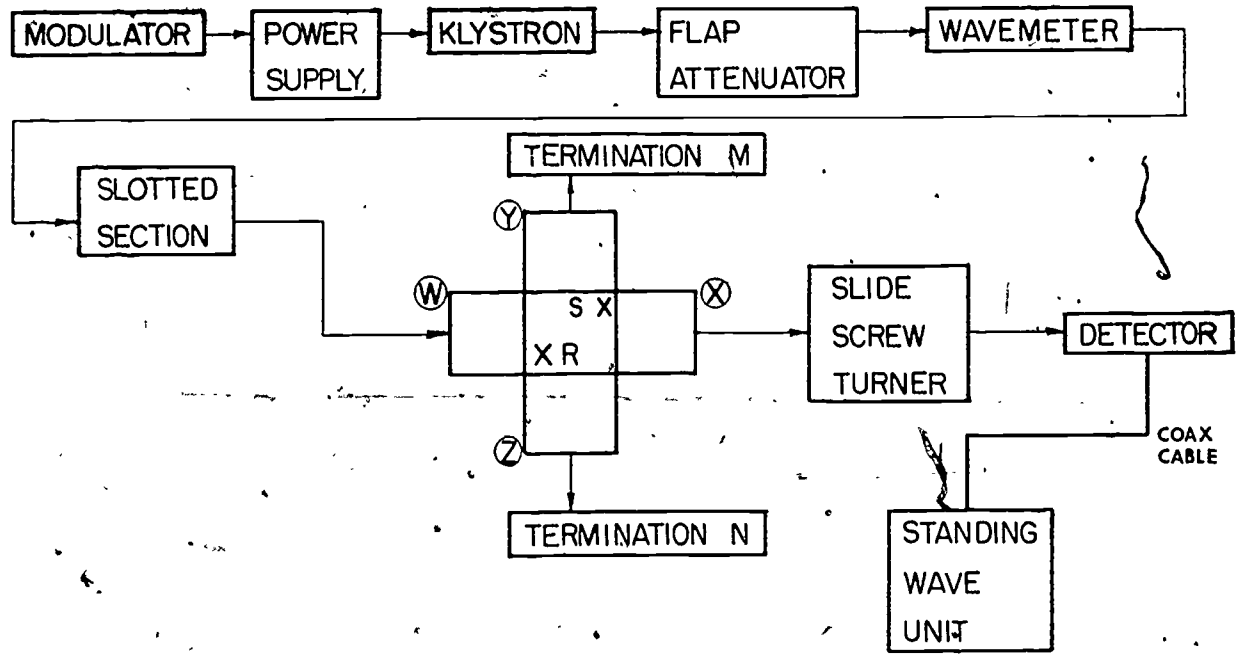

Fig. 3--Connections for Directional Coupler Measurements

2. Turn the klystron cavity adjusting screw completely counterclockwise. Do not jam it against the stops.
3. Adjust the klystron for a stable mode of oscillation.
4. Adjust the wavemeter for a dip on the standing wave unit meter. Record the reading and then detune the wavemeter.
5. Set the flap attenuator for minimum attenuation.
6. Adjust the slide screw tuner for maximum power output and minimum vswr.
7. Set the standing wave meter to 0 dB.
8. Change the slide screw tuner and the detector from position X to position Z to measure the signal at this point. Record the reading in dB. (The detector must always be located after the slide screw tuner.) Be sure to move load N to X.
9. Move the slide screw tuner and detector to position Y from position Z. Move load M to position Z.
10. Measure signal in dB and record the reading.
11. Change the frequency of the klystron to about midrange.

Procedure: Continued

12. Move the slide screw tuner, detector, and terminations back to their original positions as in Step 1.
13. Adjust the klystron to a stable mode and then repeat Steps 4 through 10.
14. Turn the klystron adjusting screw to maximum clockwise (do not jam against the stop), move the equipment back to the original position as in Step 1, and repeat Steps 4 through 10.
15. Remove the termination in Steps 8 and 9. Repeat Steps 4 through 10.
16. Prepare a chart with all measurements.
17. Using the following formulas, plot the directivity and coupling at the several frequencies just measured in Steps 4 through 14.

Insertion loss $= 10 \log \frac{W\ in}{X\ out}$ (in dB) (in dB)

Coupling $= 10 \log \frac{W\ in}{Z}$ (in dB)

Isolation $= 10 \log \frac{W\ in}{Y}$ (in dB) (in dB)

Directivity $= 10 \log \frac{Z}{Y}$ (in dB)

18. Calculate the effective directivity and the coupling using the values found in Step 15.

Job Questions:

1. What happens to the amount of coupled signal if the input and output ports of the coupler are reversed?

2. Did removing the load in Step 15 change the coupling and directivity?

3. What happens to the coupling and directivity if the input-output line is changed to the coupled-unwanted line and vice versa?

Related Study Assignment No. 8: Microwave Antennas

Objective:

Upon completion of this assignment the student will: (1) Know the characteristics of antenna systems used in microwave transmission, (2) become acquainted with several types of antennas, and (3) be required to pass a written examination with a score of 75% or more.

Introduction:

The heart of any transmitting and receiving system is the antenna. Microwave systems are no exception and as a rule require a very high gain, directional antenna.

A very basic antenna used with microwaves is the horn antenna, a device that looks as if the waveguide, to which it is attached, has been flared into a cone or rectangular-shaped funnel. Figure 1 illustrates one shape of a horn antenna. The configuration of this device provides a means of producing a field distribution across an aperture. The power gain and the beam width are determined by the angle of the flare of the sides as well as the length of the flared portion. The number of lobes also depends on the length of the flared portion. The radiation pattern may be altered into a selected plane by choosing the proper shaped horn. Several of these shapes are shown in Fig. 2.

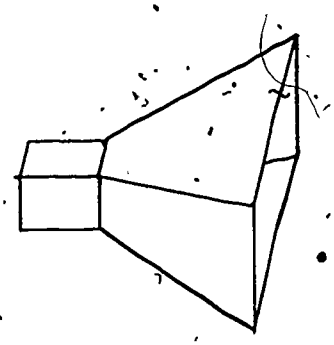

Fig. 1--Typical Horn Antenna

Introduction: Continued

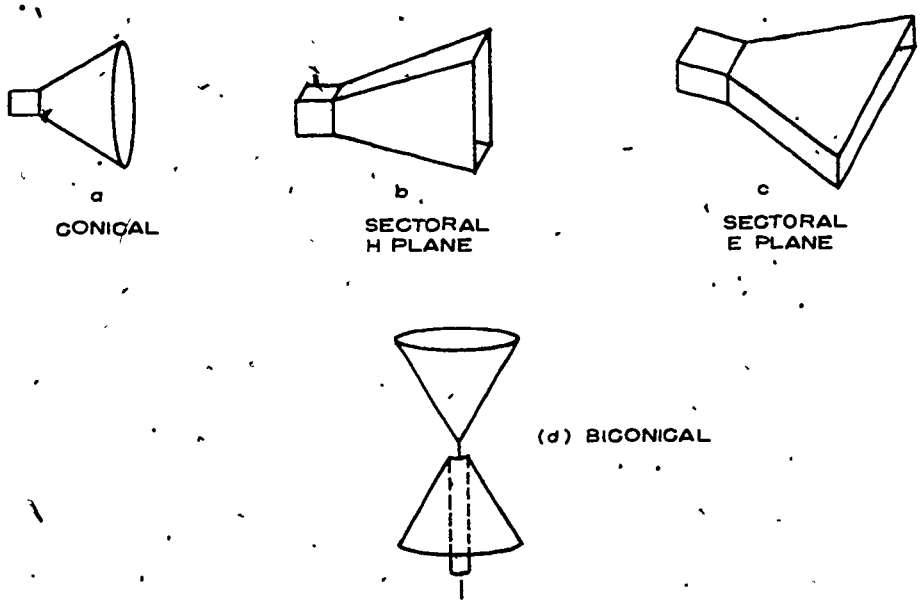

Fig. 2--Other Horn Shapes

The shapes in Fig. 1 and Fig. 2a provide a thin, narrow beam that is very directive in both the horizontal and vertical plane. Figure 2b and c produces a pattern similar to a fan and d will result in a wide, horizontal but narrow, vertical beam. Most horns do not provide the gain found in the parabolic reflector, the next radiator to be discussed.

The parabolic antenna is probably the most used of all microwave antennas. The unit consists of a device that emits energy for transmission into a parabolic reflector. The reflector concentrates the energy into a narrow beam and aims the beam in the desired direction. Several factors determine the width and shape of the lobe transmitted by the reflector and these are the parabola size, the parabola shape and the field intensity variation over the aperture.

Some minor lobes are usually present but these can be reduced to a minimum value by proper design. Also, if the parabola is designed to be several wavelengths across, the power gain and beam width are exceedingly good. Beam width can be as small as 3 degrees and power gain can be about 4000 with a good "dish." Several shapes of parabolic reflectors with different feed systems are shown in Fig. 3.

Some method must be employed to radiate energy into the parabola or to feed (sometimes called "illuminate") the reflector. It is very important that the method used to feed the reflector be one that will concentrate all its radiated energy into the dish since this will be the only source of radio frequency energy. For example, if an omnidirectional antenna

Introduction: Continued

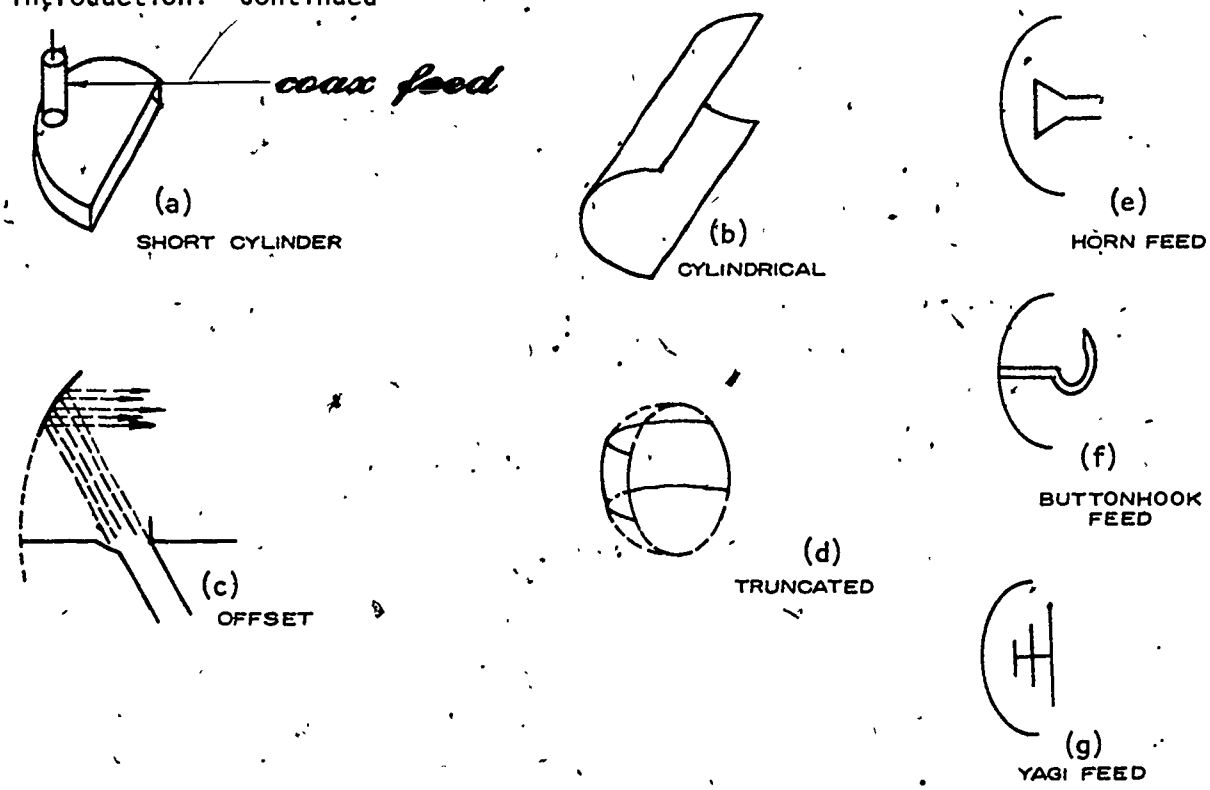

Fig. 3—Parabolas and Feed Systems

is placed in front of a reflector as in Fig. 4, the reflector receives less than half the energy radiated by the antenna and this greatly reduces the power gain. If the antenna is itself highly directional, only the central portion of the parabola will be illuminated causing unnecessarily large lobe width. With proper shape of the reflector and good design of a feed system, maximum reflection that could be attained would be unity or 1.0. In actual field conditions the amount of reflection is usually about .7. Several excitation methods to supply energy to a reflecting surface are shown in Fig.3 and the most popular type found in use today is probably the "buttonhook" arrangement.

Two other antennas, although not popular in microwave communications systems today, are the slot antenna and the lens antenna. In the slot antenna, it has been discovered that by cutting a narrow slice of material from a thin conducting plate and attaching a feed line to each side of the center of the slot, the slot becomes a radiator if it is the proper length. Strangely enough, the narrow slice that was removed

Introduction: Continued

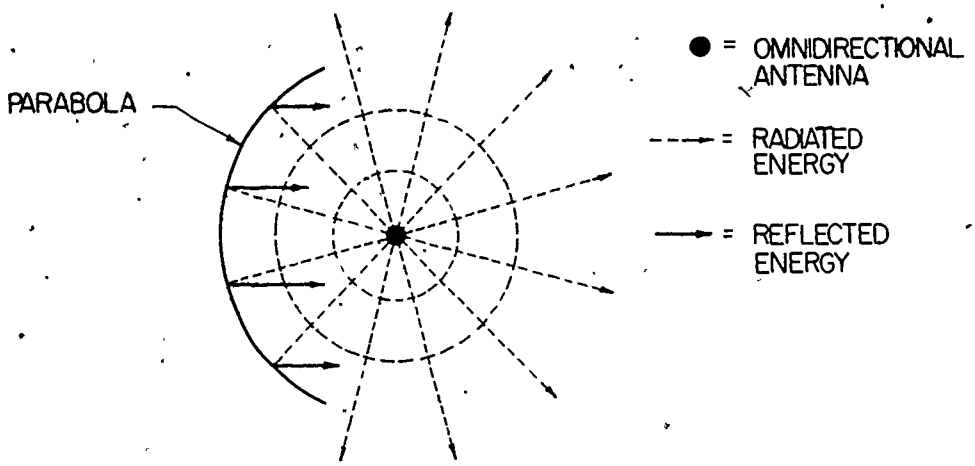

Fig. 4--Omnidirectional Antenna Radiation Pattern into Parabola Showing Amount of Energy Striking Parabola for Reflection

to form the slot can also be made into a radiator. Several variations of the basic slot antenna are shown in Fig. 5.

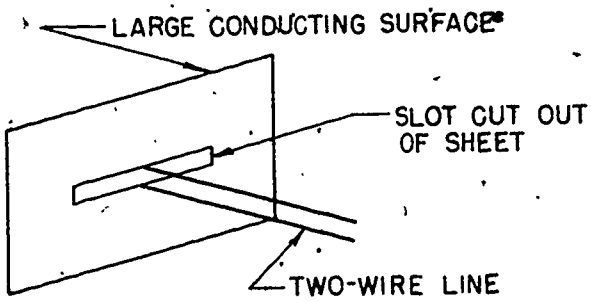

a) Basic Slot Antenna

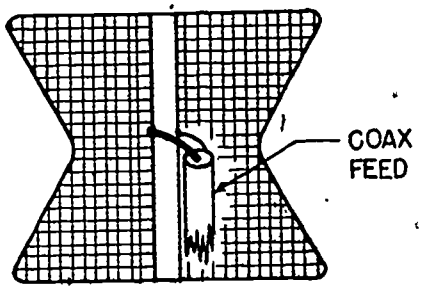

b) Batwing Slot

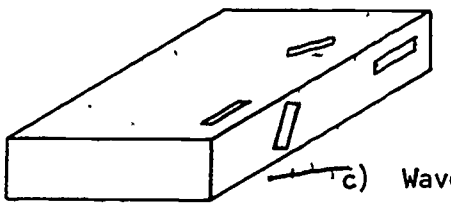

c) Waveguide Slot

Fig. 5--Slot Antenna Configurations

Introduction: Continued

The lens antenna has a field distribution similar to that of the horn antenna. By designing the lens so that the waves striking the lens at the farthest point from the axis must travel a greater distance than those waves at the axis, the spherical wave from a radiator is changed into a plane wave due to phase velocity action like that in a waveguide. Figure 6 illustrates a lens antenna and its associated wavefronts. This type is frequency-sensitive due to phase velocity action and Fig. 7 shows a second lens antenna that overcomes the frequency-sensitive disadvantage by employing a dielectric lens.

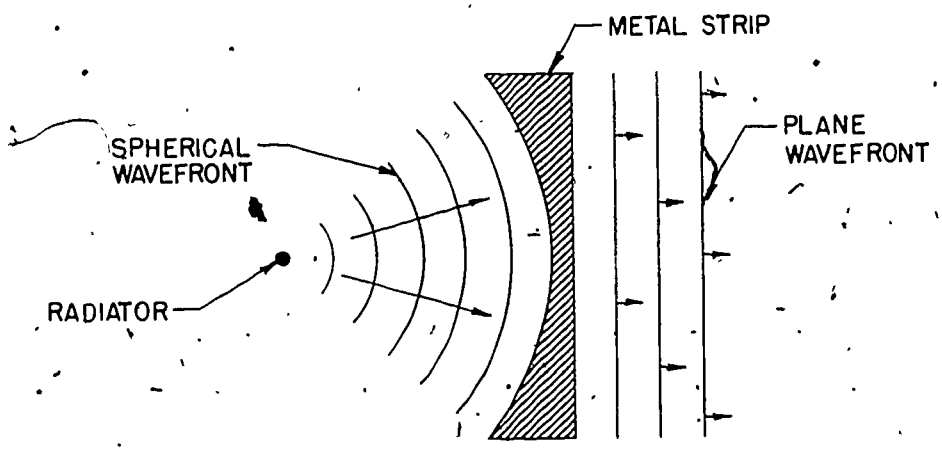

Fig. 6--Metallic Strip Lens Antenna

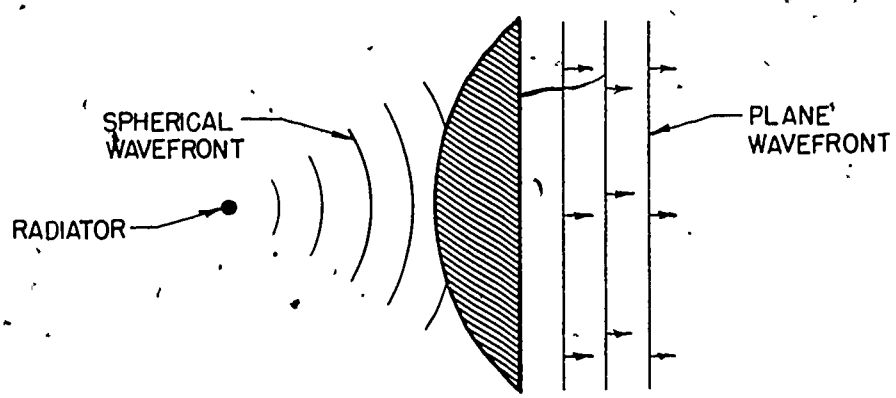

Fig. 7--Dielectric Lens Antenna

Introduction: Continued

A great many microwave systems use a parabola mounted near the ground and locate a passive reflector up on the tower to bounce the microwave signal in the desired direction. The reflector, as a general rule, looks like a large refrigerator rack or grid. By using this type installation long runs of waveguide and weatherproof housing for terminal equipment are eliminated. Also, equipment is readily available for maintenance without climbing the supporting structure for the antenna.

Horns, parabolic reflectors, and dielectric lenses are forms of non-resonant antennas. They find uses in narrow or wide band transmission of microwave energy.

References:

1. Robert L. Shrader, ELECTRONIC COMMUNICATIONS, 3rd Ed., Gregg/McGraw-Hill Book Co. Read pages 517 and 662.

2. George Kennedy, ELECTRONIC COMMUNICATIONS SYSTEMS, 2nd Ed., Gregg/McGraw-Hill Book Co. Read pages 313--334.

Study Questions:

1. Name two popular types of microwave antennas.

2. What determines the power gain of a horn antenna?

3. What is the advantage of using a parabolic reflector in microwave transmission?

4. What is a passive reflector?

Job: Antenna Measurements

Objective:

The student will: (1) Measure the radiated pattern of a horn antenna, (2) determine the radiated polarization of a microwave signal, and (3) determine the radiated beam width of a microwave signal.

Job Information:

Antennas are necessary devices in the transmission and reception of all radio systems. In fact, the antenna is probably more important than any other component in the entire system.

Microwave antennas are generally designed to be unidirectional since the systems are used to transfer data from one point to another. Broadcast stations, on the other hand, transmit signals equally strong in all directions. Since the microwave signal is concentrated into one direction, a type of "gain" occurs. Imagine a flashlight bulb mounted atop a set of batteries and illuminating a room from the center of the floor. The room would be rather dark all over. Now, by placing a reflector behind the bulb, the light is concentrated into one direction and one area of the room is supplied with all the light output of the lamp, creating a bright "spot." (This example is then comparable to a microwave antenna.) To produce the same amount of light as created by the "spot," the lamp (atop the batteries) without the reflector would have to be increased in brilliance many times.

The width of the beam of light would be important to the brilliance of the spot also. The narrower the beam, the greater the amount of light concentrated into the spot. The width of the microwave beam, then, affects the signal strength at the receiving station in exactly the same way as the beam width of the light rays. The beam width of the microwave signal is usually measured at the "half power points" or at the points on either side of the beam that is 3 decibels (dB) less than the maximum at the center of the beam. The width is expressed in degrees.

The gain of this type antenna is calculated using the equation:

$$G = \frac{4\pi A}{\lambda^2}$$

where G = gain in decibels
A = area of the radiated signal.

Job Information: Continued

The pattern that will be measured in the procedure is called the Fraunhofer pattern. This pattern, unlike the Fresnel pattern, is independent of distance from the antenna. Measurements will result in readings that give direction only.

Tools, Materials, and Equipment:

1. Microwave training kit
2. Hand tools

References:

1. John D. Kraus, ANTENNAS, 1950 Ed., Gregg/McGraw-Hill Book Co. Pages 26, 283, 284, 291, and 353--381.

Procedure:

1. Turn the klystron cavity tuning adjustment almost entirely counter-clockwise.
2. Set up equipment as in Fig. 1.

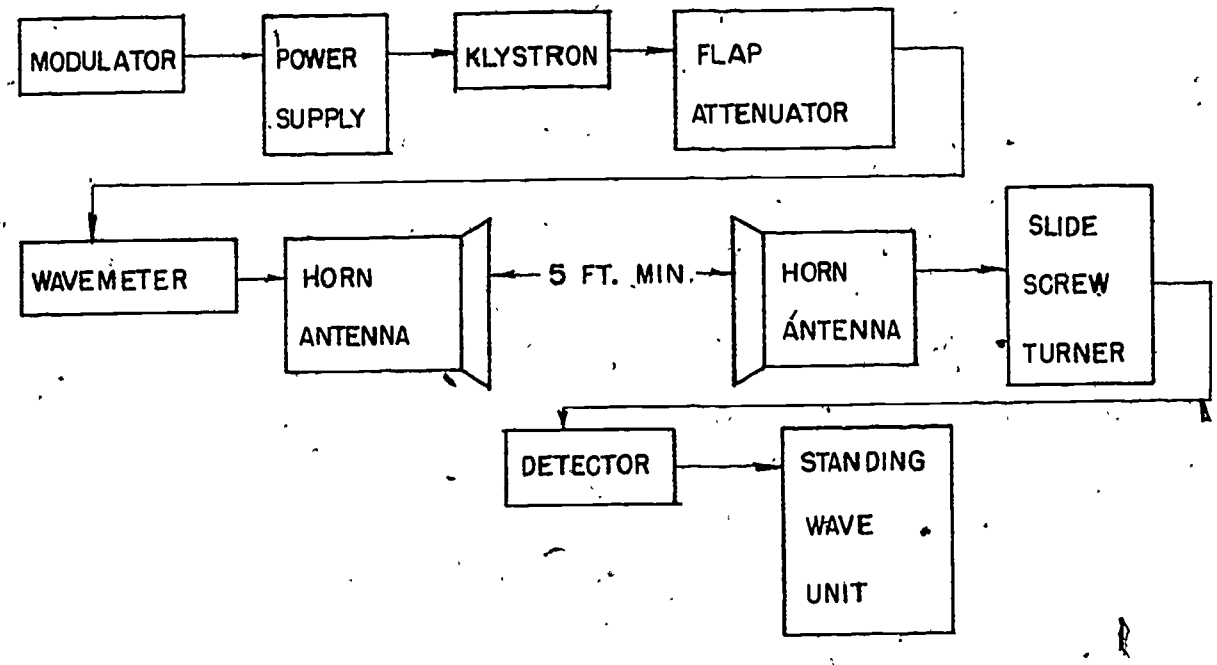

Fig. 1--Measurement of Antenna Patterns

Procedure: Continued

3. Center the antenna front edge right above the protractor board pivot point.
4. Tune the klystron for a stable output signal.
5. Measure the frequency and record the reading.
6. Detune the frequency meter.
7. Move the slide screw tuner back and forth until a maximum indication is obtained. (The antenna board pointer must be set at the 90° point. The antennas should be in perfect alignment.)
8. Adjust the vswr tuning unit gain control for 0 dB on the meter.
9. Move the receiving antenna 5° clockwise and record the reading.
10. Move the receiving antenna in 5° steps clockwise recording each reading until 90 degrees is reached.
11. Move back to zero and rotate the antenna in 5° steps counterclockwide until 90° is reached, recording each reading.
12. Place a 90° twist section between the horn and the waveguide.
13. Repeat Steps 9 through 11.
14. Plot a graph for each of the procedures 9 through 11 identifying the first graph as an H plane plot and the second as an E plane graph. (Use polar coordinate paper.)
15. Identify and record the half-power beam widths.
16. Take both the horn and twisted section off the waveguide.
17. Line up the edge of the waveguide with the pivot point of the antenna board. (Center the waveguide over this point.)
18. Repeat Steps 9 through 11 and plot a graph as in Step 14.
19. Connect the training equipment as shown in Fig. 2.

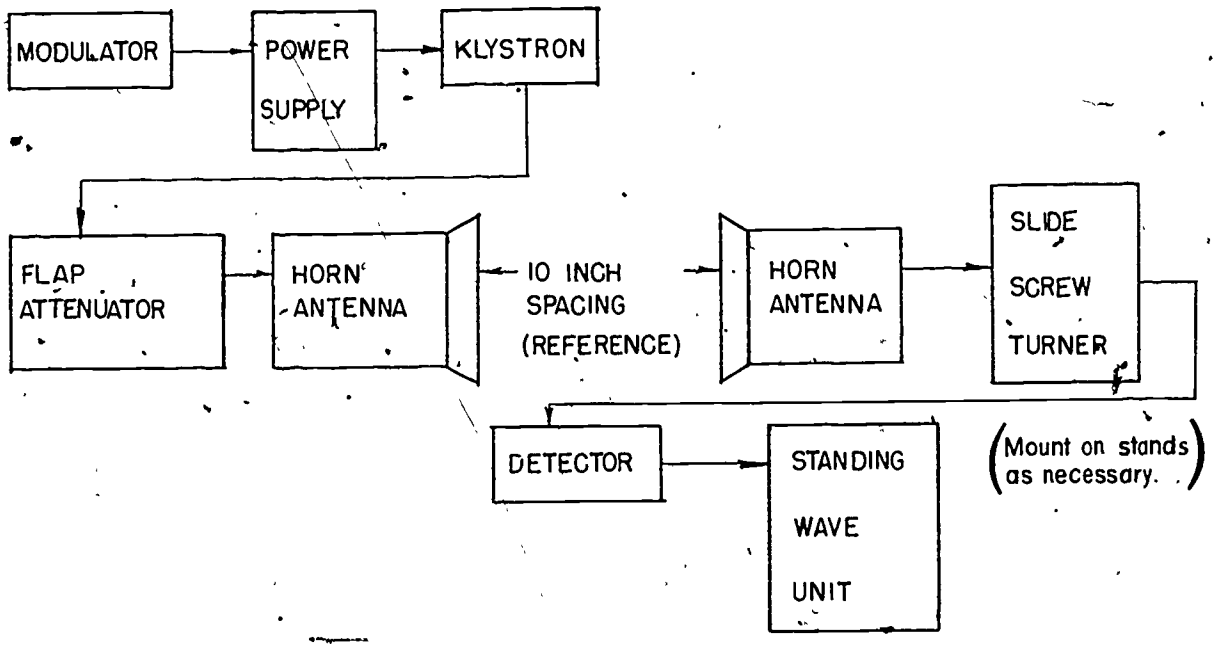

Fig. 2--Measurement of Propagation

Procedure: Continued

20. Tune up the klystron for stable operation.
21. Adjust the slide screw tuner for maximum indication on the meter.
22. Turn the range control on the vswr unit to the 0 range.
23. Turn the gain control until the meter reads 0 dB. Some trainers may not be able to reach 0 dB. If yours is one that is unable to be set to 0, go down one range.
24. Move the receiving equipment away from the transmitting equipment in .5 inch intervals until 25 inches separation is attained. Record each reading (in dB).
25. Record the reading at 5 inch intervals up to about 60 inches.
26. Record the readings at 25 inch intervals beginning at 75 inches and ending at 250 inches.
27. Compare all the readings obtained in the steps above.

Job Questions:

1. Did your measurements indicate any side lobes in addition to the main lobe?

2. What was the relative strength of the side lobes (if any) as compared with the main lobe?

3. Would side lobes be a form of wasted radiated energy?

4. Discuss the radiation pattern of the horn antenna as compared to a straight waveguide.

5. What did you discover about received power in relation to the receiving and transmitting antenna distances?

6. What happened to the radiated pattern when the 90 degree twisted section was inserted into the line?

Job: Microwave Reflection, Refraction and Polarization

Objective:

The student will: (1) Measure reflection, refraction, and polarization of a microwave signal and (2) demonstrate objects which cause reflection, refraction or polarization of microwave signals.

Job Information:

Microwaves travel through space in much the same manner as light. In the R.S.A. on antennas it was found that the radiated energy of a microwave transmitter could be focused into a narrow directional beam. This study will show that microwaves can also be reflected or bent, either intentionally by man or by natural phenomena. Also, microwave signals may be polarized, that is, transmitted in different planes just as other electromagnetic waves are propagated.

The shape of the antenna and its orientation usually determine the polarization of the microwave signal. The waves are said to be in the same plane as the electric field so when the electric field is in the vertical plane the signal is transmitted in the vertical plane, hence it is vertically polarized. There may be some shift of the signal toward the horizontal plane by the time it reaches the receiver and if the receiving antenna is horizontally polarized it may receive some of the transmitted signal. However, this received signal would be a great deal less than the signal that would be received by the same antenna if it were vertically polarized.

Reflections of microwave signals can occur under proper conditions. These reflections are used to advantage where it is necessary to locate the transmitting apparatus near the earth's surface with a passive reflector located upon a tower. By using proper engineering procedures a gain in signal strength can be attained with the passive reflector. Some reflections, of course, are undesirable. These can occur if an obstruction such as a water tank or tall building are encountered by the transmitted signal. The signal then will either miss the receiving antenna or arrive at a different time from the direct signal due to the distances traveled. This can cause interference similar to "ghosts" seen on your TV receiver. A path over water can become a problem if precautions are not taken as reflections can take place easily over a lake, large river, etc.

Refraction or bending of the microwave beam can and does occur occasionally. This can occur over a large expanse of water due to heating and convection air currents. Cool air and warm air meeting such as a weather front can cause an "inversion layer" thus bending the microwave beam.

Job Information: Continued

Sometimes the signal gets trapped in between two such layers and will travel along the earth's curvature for long distances. Any such bending or refraction usually is detrimental to the reception of the transmitted signal. When such phenomena occur regularly a system of diversity reception can sometimes be employed. This consists of mounting multiple receiving antennas to pick up the refracted signal. One example of such an installation would be to mount a dish just above the main receiving antenna to pick up the signal when the signal is bent upwards due to an inversion layer.

Refraction may also occur if the microwave signal travels through certain material. Ceramic, glass, and similar materials placed in the microwave path will cause the signal to be bent in a different direction according to the index of refraction of the material (the square root of dielectric constant). A prism placed in the path may be oriented in such a manner as to reflect or refract the microwave signal.

In the procedure, measurements will show the reflection and refraction effects upon the microwave signals.

Tools, Materials, and Equipment:

1. Microwave training kit
2. Hand tools
3. Wood, plastic, paper, glass, rubber, aluminum, and polarized disc

References:

1. Richard K. Moore, TRAVELING WAVE ENGINEERING, 1960 Ed., Gregg/McGraw-Hill Book Co.

Procedure:

1. Connect the equipment as in Fig. 1.

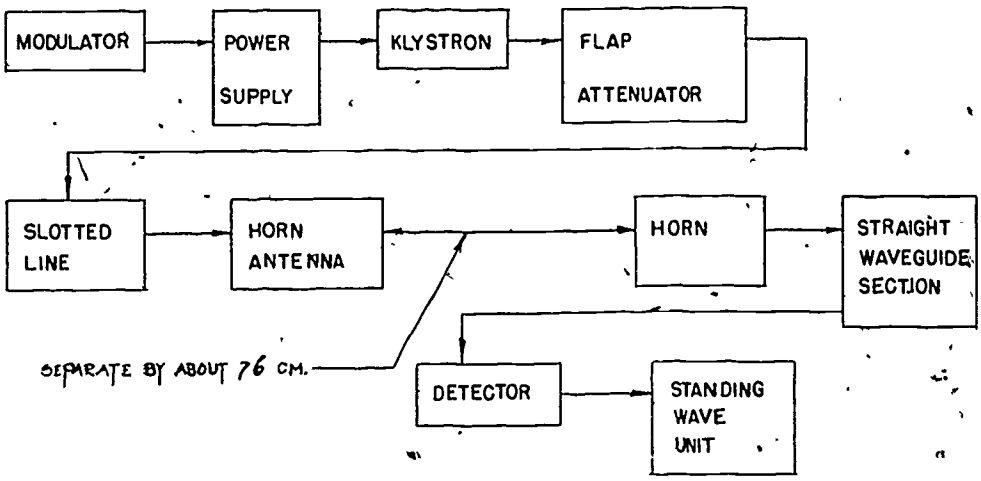

Fig. 1--Attenuation Measurement Setup

Procedure: Continued

2. Tune the transmitter for stable oscillations.
3. Set the output for zero dB on the meter.
4. Place different objects in the path between the antennas and record the dB reading of the meter for each object. Use such things as wood, plastic, glass, rubber, paper, leather, ceramic, and aluminum and polarized disc. (The signal should be attenuated or changed due to the different dielectric constants.) Also rotate the polarized disc 90°.
5. Connect the equipment as shown in Fig. 2.

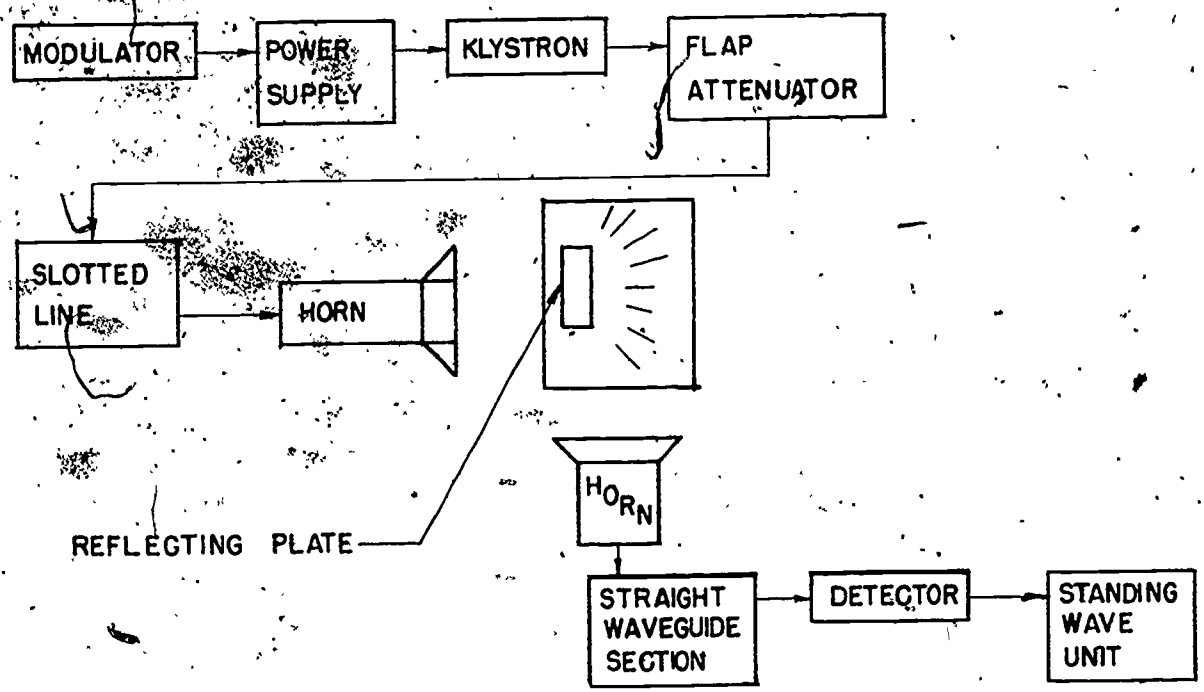

Fig. 2--Reflection Measurement Setup

6. Move the flat reflector plate through the arc of a circle on the board and locate the point of maximum reading.
7. Record the angle of maximum reading.
8. Reposition the receiving antenna and again rotate the reflector plate for maximum reading. (The angle that the signal strikes the plate should also be the angle of reflection at which the receiving antenna is located.)

Procedure: Continued

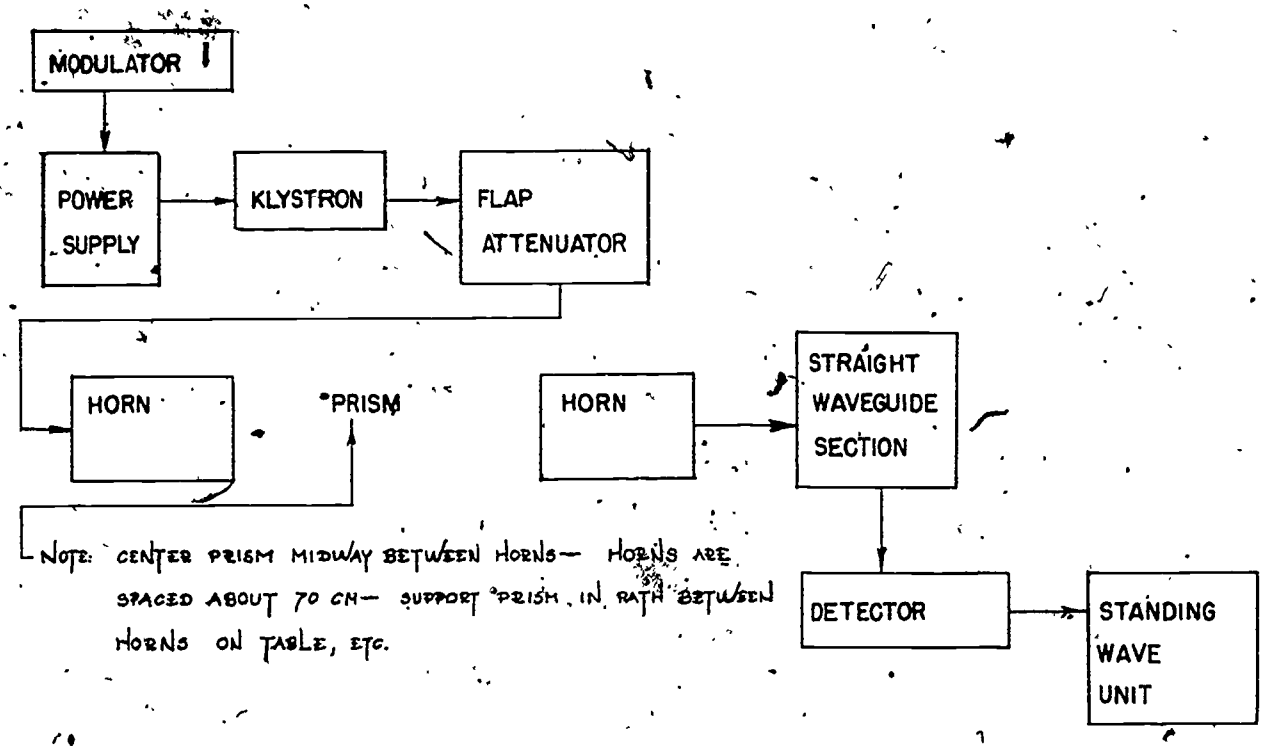

Fig. 3--Reflection Measurements Using a Prism

10. Move the units apart very slowly (or closer together) until maximum signal strength is attained.
11. Set the range selector and gain control for zero (0) dB on the meter. The azimuth and elevation of the receiver should be checked for maximum signal at this point.
12. Place a prism in the path and turn it until maximum signal is obtained. Record angle and level.
13. Move the receiving antenna around the arc of a circle recording the angles of reflection and the maximum and minimum readings.
14. Orient the prism and receiving antenna to other positions to obtain other angles and readings. (Use a different face on the prism.)

Job Questions:

1. What did you discover about the level (in dB) of the received signal as different objects were placed in the path?

Job Questions: Continued

2. What did you discover about the reflected angle as the reflecting plate was rotated through an arc around the transmitting antenna?

3. What happened to the signal strength when the polarized disc was rotated 90°?

4. What happened to the reflected angle and signal strengths as the prism faces were changed and as the angles were changed?

5. Did you find any point in the experiment where the signal seemed to be refracted or bent when an object was placed in the microwave path? Should the signal path be straight or bent when an object is placed in the path?

Related Study Assignment No. 9: Smith Chart

Objective:

Upon completion of this assignment, the student will know the various uses of the Smith Chart in microwave calculations.

Introduction:

The Smith Chart is a graph or a special electronic slide rule used to calculate impedance, matching, vswr, and other values as related to transmission line calculations. The chart contains values of resistance, conductance; impedance, susceptance, admittance, vswr, and reflection coefficient.

The chart was developed by P. H. Smith to simplify the complex calculations associated with transmission lines. The chart is useful not only in the microwave region but in AM, FM, TV, and other commercial services. The recommended texts cover the Smith Chart very thoroughly with explanations and examples. The student should solve enough problems using the Smith Chart to become proficient in its use.

References:

1. Richard K. Moore, TRAVELING WAVE ENGINEERING, 1960 Ed., Gregg/McGraw-Hill Book Co. Pages 250--282.

2. Harold E. Ennes, AM/FM BROADCASTING EQUIPMENT, OPERATIONS, AND MAINTENANCE, 1st ed., Howard W. Sams and Co., Inc. Pages 72--75.

3. George Kennedy, ELECTRONIC COMMUNICATIONS SYSTEMS, 2nd Ed., Gregg/McGraw-Hill Book Co. Pages 228--239.

Study Questions:

1. Where is the line representing the resistance component $\frac{R}{Z_0}$ located on the Smith Chart?

2. Identify the section of the chart that would give values of $\frac{-JX}{Z0}$.

3. List six different things that can be calculated using a Smith Chart.

Study Questions: Continued

4. Identify the scale where transmission coefficient would be read.

5. How many wavelengths are contained in one revolution (one trip around the circumference) of the Smith Chart?

6. How many degrees are contained in one revolution of the Smith Chart?

Job: Smith Chart Calculations

Objective:

The student will solve for various values by using the Smith Chart.

Tools, Materials, and Equipment:

1. Smith Chart
2. Compass
3. Ruler

References:

1. Richard K. Moore, TRAVELING WAVE ENGINEERING, 1960 Ed., Gregg/McGraw-Hill Book Co. Pages 250--282.

2. Harold E. Ennes, AM/FM BROADCASTING: EQUIPMENT, OPERATIONS, AND MAINTENANCE, 1st Ed., Howard W. Sams Publishing Co. Pages 72--75.

Procedure:

1. Determine the input impedance to a line that is terminated with a resistive load when the characteristic impedance (Zo) of the line is 48 ohms, the terminating resistor is 75 ohms (Zr), the wavelength is 1 meter, and the line is 1.1 meters long. First, normalize the values (this is necessary to use the Smith Chart) by dividing the terminating resistance, Zr, by the line impedance, Zo. $\frac{75}{48} = 1.56$. (Since the load is pure resistance, it is 75 + jo.)
2. Draw a circle with a compass on the Smith Chart with a radius that extends from 1.0 (the center of the chart) to 1.56 on the vswr line (horizontal line to the right of center).
3. Rotate twice around the chart (each rotation = .5 λ) beginning at .25 wavelengths (extreme right hand side of chart). Move in the direction towards generator. Since the line is 1.1 wavelengths long, it is necessary to continue to rotate .1 wavelength to .35 (.25 + .1 = .35).
4. Draw a line from .35 to the center of the chart.
5. Read the resistance component on the horizontal line extending from the center of the chart to the left. The reading will be taken at the point where the circle (drawn in Step 2) crosses the resistance line or .65.
6. Read the reactive component where the circle intersects the line drawn from .35 to the center of the chart or .45 capacitive (-jo.45).

Procedure: Continued

7. Calculate the sending end impedance by multiplying the line impedance (Zo). 48 (.65 - jo .45) = 31.2 - j 21.6 (See Fig. 1)
8. Calculate the sending end impedance (Zs) for a load that is purely reactive where the load is Zr = 2.2 Zo and the line is 1.1 wavelengths long. First draw a line from the center of the chart to 2.2 on the outer circle (extend this line on across the outer scales).
9. Read the distance toward the generator or .182.
10. Read the angle of reflection coefficient or 49°.
11. Rotate around the chart two revolutions (each rotation equals .5 wavelengths long) or .182 to .182 to .182 to .282 (.182 + .1 = .282).
12. Draw a line from the center of the chart to .282 on the "wavelength toward generator" scale.
13. Read the intersection of the line in Step 12 and the outer circle of the chart or 5.05 or Zs = j 5.05 Zo (see Fig. 2).
14. Calculate the length of a matching shorted stub and the distance that the stub is located from the load when the line is 50 ohms and the load is 40 + j 32. First, normalize the impedance of the load by dividing 40 j 32 by 50 ohms. $\frac{40 + j32}{50} = .8 + j0.64$.
15. Locate .8 on the resistance line (the horizontal line to the left of center on the Smith Chart).
16. Move upward and to the right along the .8 line until the .64 point is reached (the point where a line drawn from the inductive component at .64 would intersect the .8 line).
17. Draw a circle whose radius is the .8 + j0.64 point to the center of the Smith Chart.
18. Draw a line from the center of the chart through the .8 + j0.64 point to the outermost scale of the chart.
19. Draw a line through the point where the circle (drawn in Step 17) crosses the circle passing through 1.0 (center of the chart) or +j0.75 above the horizontal line passing through the center of the chart. Extend this line to the outermost scale of the chart.
20. Read the "wavelengths toward generator" scale where the lines drawn in Steps 17 and 19 intersect it or .128 and .152. Subtract .152 - .128 = .024. This is the distance that the stub is located from the load.
21. Locate the point that corresponds to -j0.75 capacitive reactance. Draw a line from the center of the chart through the point just located (-j0.75) extending it on to the outermost circle of the chart. (To cancel the +j0.75 reactance.)
22. Read the value where this line crosses the "wavelength toward generator" scale or .3975. This is the length of the matching shorted stub.
23. Check with your instructor to see if additional problems have been assigned.

Job Questions:

1. Where is the line corresponding to vswr located on the Smith Chart?

2. Where is the section corresponding to inductive susceptance located on the Smith Chart?

3. Why are values of impedances "normalized" for use with the Smith Chart?

State Vocational-Technical Schools of Louisiana

MICROWAVE

JOB 9

PAGE 4 OF 6

$Z_0 = 48\ \Omega$

LOAD 75 + j0

IMPEDANCE OR ADMITTANCE COORDINATES

LINE LENGTH = 1.1 METERS

F_λ = 1.0 METER

Z_S = ?

fig. 1

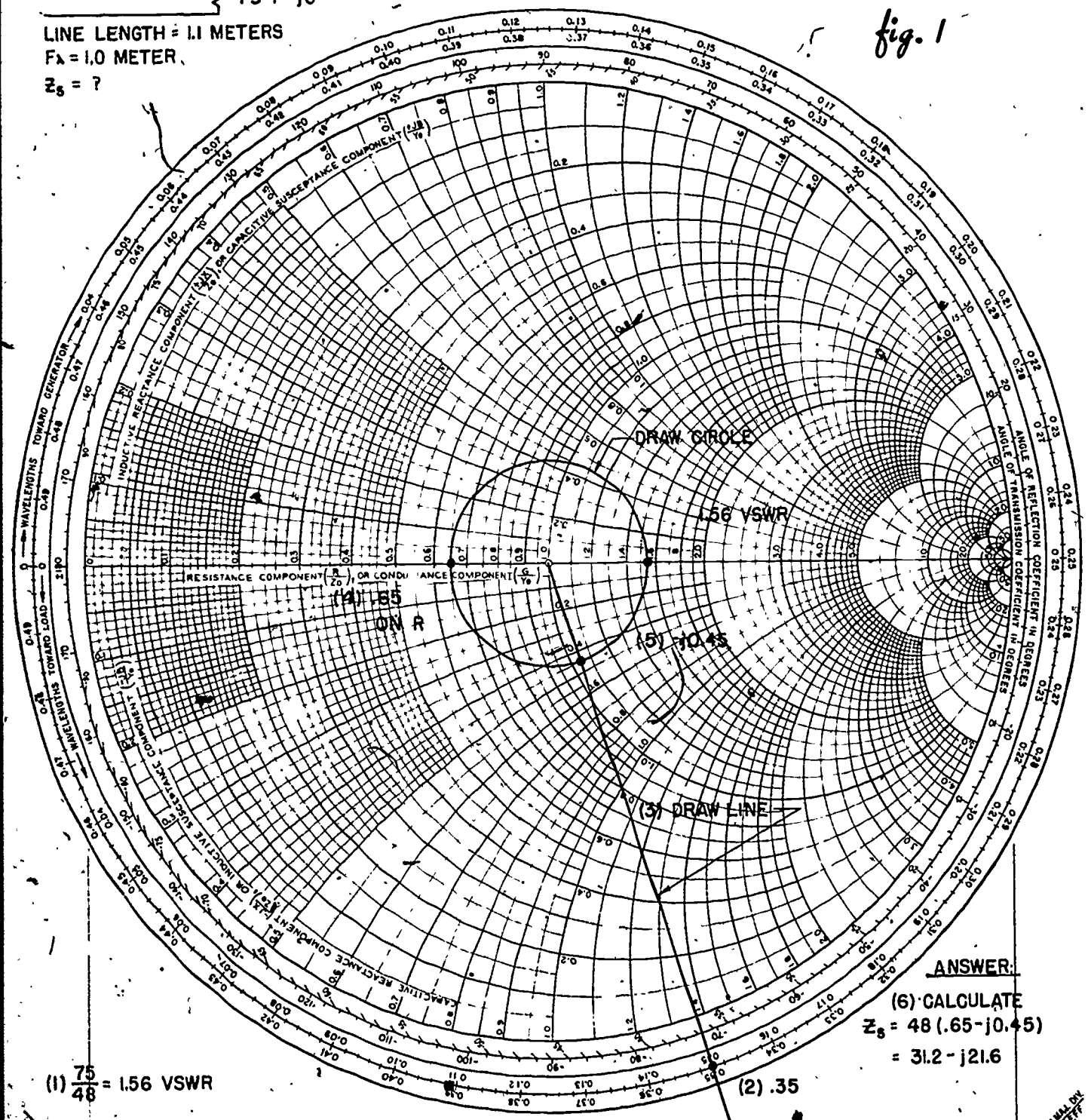

ANSWER:

(6) CALCULATE

$Z_S = 48\,(.65 - j0.45)$

$= 31.2 - j21.6$

(1) $\frac{75}{48}$ = 1.56 VSWR

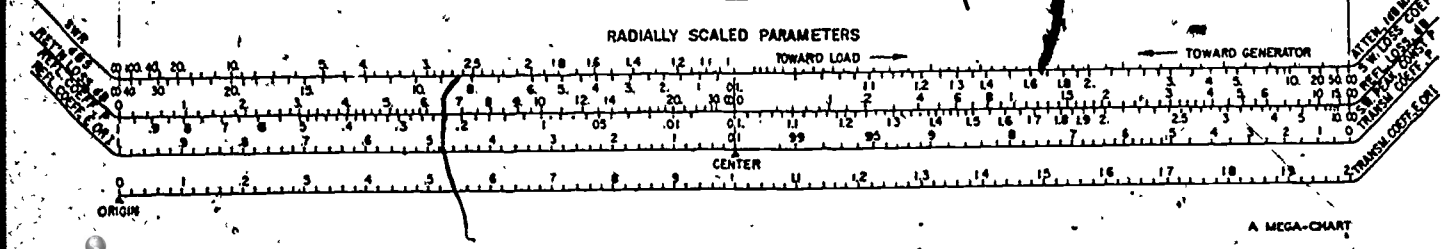

IMPEDANCE OR ADMITTANCE COORDINATES

fig. 2

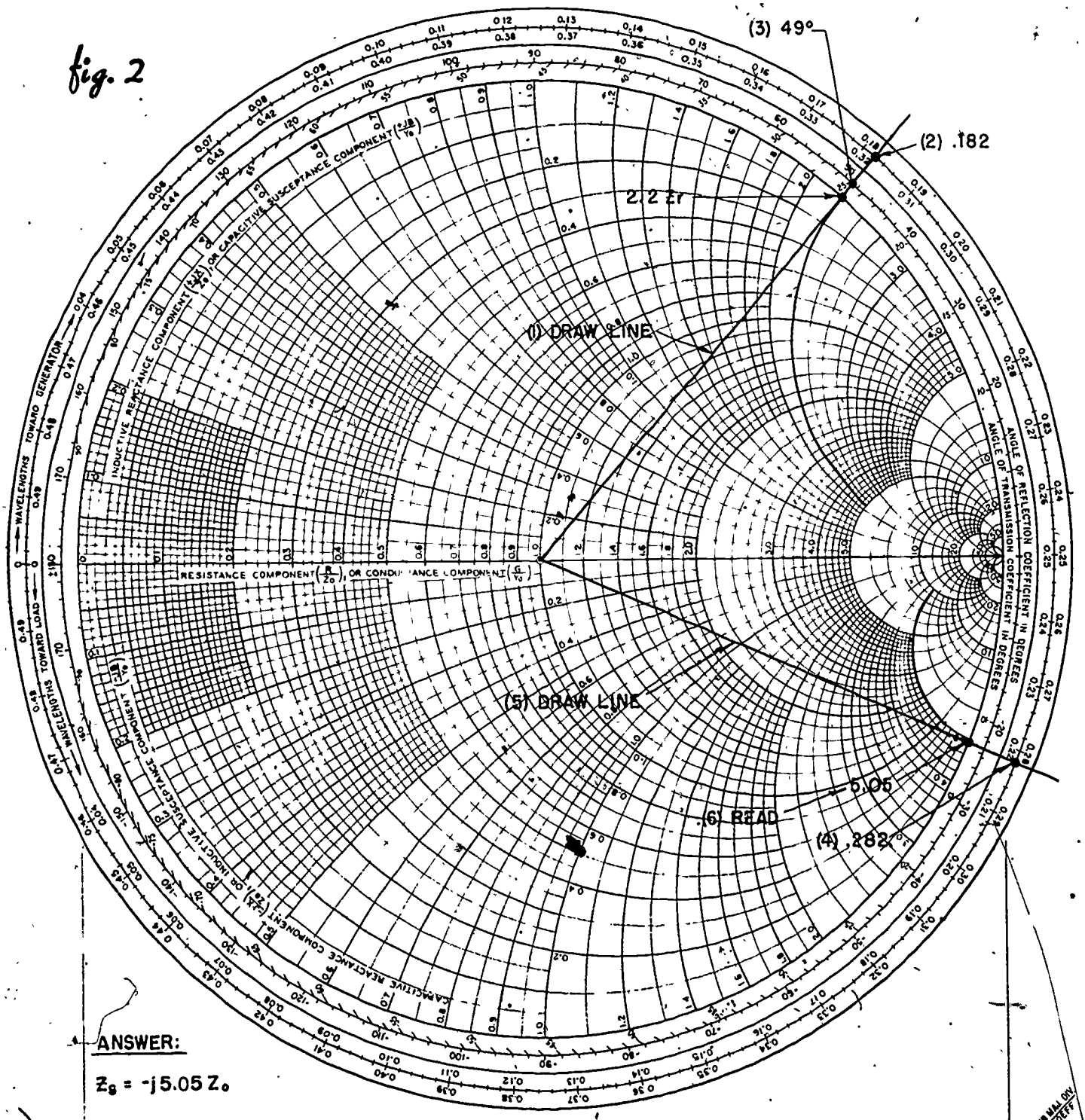

ANSWER:

$Z_s = -j5.05\,Z_o$

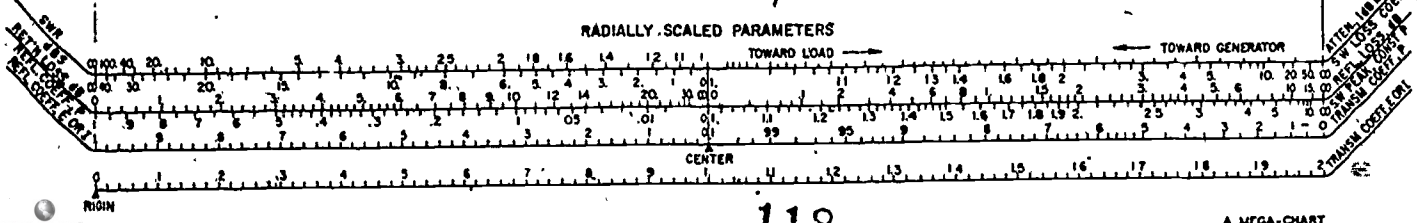

A MEGA-CHART

State Vocational-Technical Schools of Louisiana

MICROWAVE

JOB 9

PAGE 6 OF 6

50 Ω LINE TERMINATED WITH 40 + j32. MATCHING SHORTED STUB = ?

(1) NORMALIZED

$$\frac{40j32}{50} = .8 + j0.64$$

IMPEDANCE OR ADMITTANCE COORDINATES

(6) SUBTRACT:

.152
-.128
.024 λ

(DISTANCE OF STUB FROM LOAD)

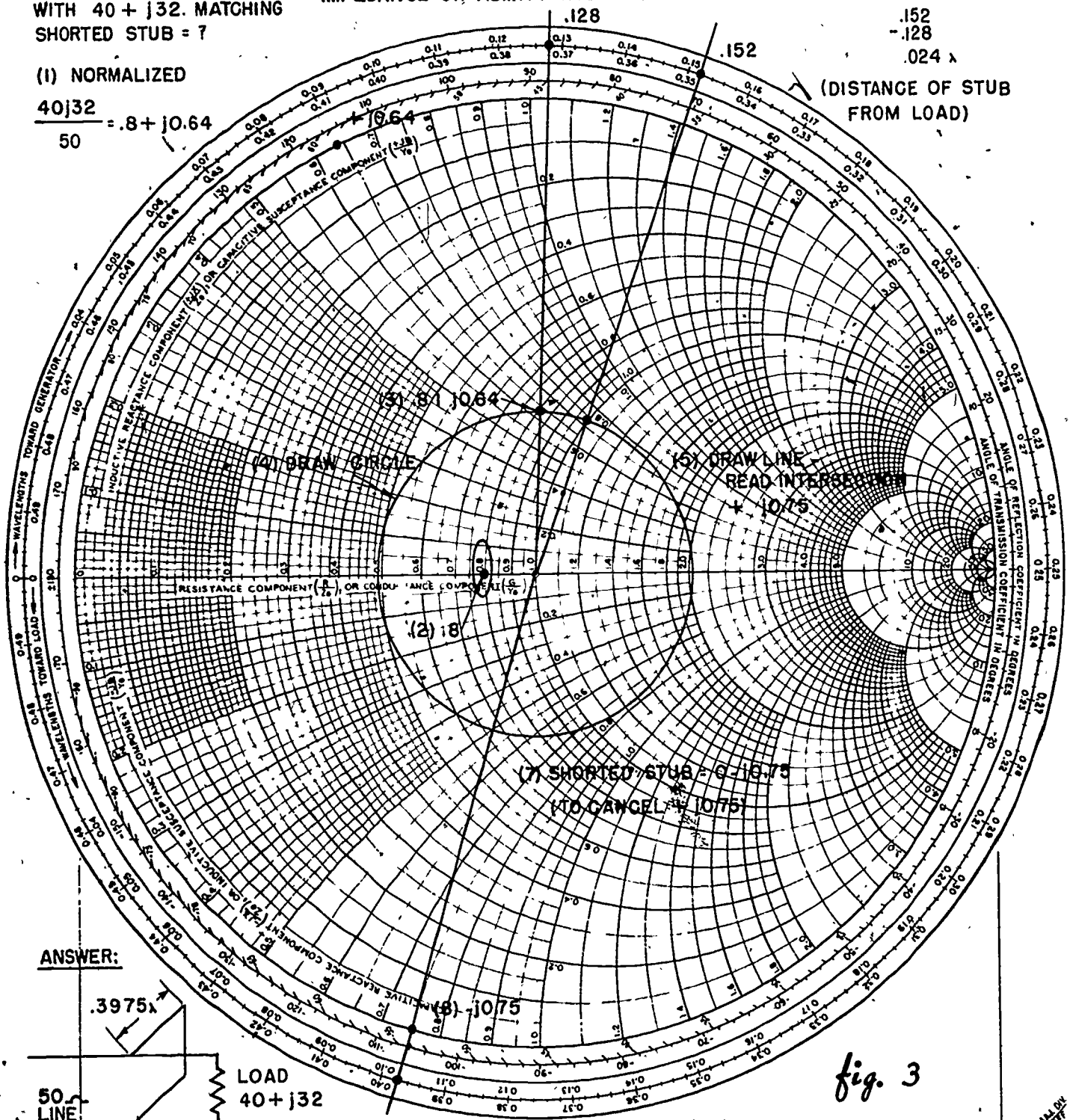

ANSWER:

fig. 3

(9) .3975 = LENGTH OF STUB IN λ.

RADIALLY SCALED PARAMETERS

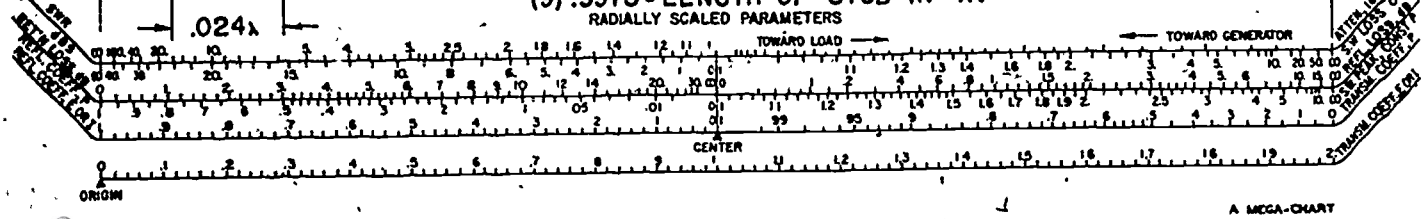

A MEGA-CHART

Related Study Assignment No. 10: Microwave Receivers

Objective:

Upon completion of this assignment the student will: (1) Be acquainted with the various sections of a typical microwave receiver and (2) be required to pass a written examination with a score of 75% or more.

Introduction:

The microwave receiver of today is very similar to receivers operating in the lower frequency bands. The major differences are: (1) The frequencies employed by the local oscillator and intermediate-frequency amplifiers and (2) the shapes and sizes of various components.

The input signal is usually fed directly to a balanced mixer for conversion to the intermediate frequency rather than being amplified first by a radio frequency amplifier and then being mixed or heterodyned to the IF frequency. The balanced mixer enables the circuit to cancel any noise input from the local oscillator. Both klystron and solid state local oscillators are fed into the balanced mixer type circuit. Fig.1 shows a basic balanced mixer circuit.

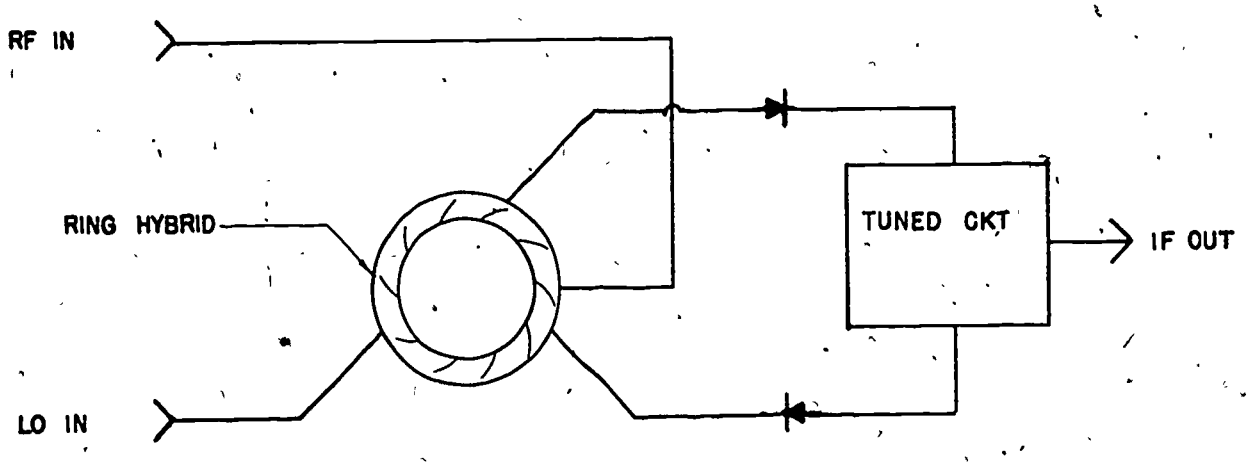

Fig. 1--Balanced Mixer Circuit

Introduction: Continued

After mixing, the heterodyned signal is usually fed into an intermediate frequency preamplifier. Two popular frequencies of IF's are 130 MHz and 70 MHz, although the frequency may be any value. The preamplifier increases the signal amplitude and passes it to the IF amplifier. Here the signal is raised again and bandwidth is taken into consideration for accurate reproduction of the transmitted signal.

Demodulation stages follow the IF amplifier and some method of automatic gain control (AGC) is usually taken from this point to feed back to earlier stages to increase or decrease the gain of these amplifiers. This assures a fairly constant output signal even under fluctuating input signal due to path changes. At this same point many units develop an automatic frequency control (AFC) voltage to correct the local oscillator frequency so as to always produce the intermediate frequency under varying signal conditions. The demodulated signal itself is fed on to other amplifiers (video, audio, etc.) to bring the signal amplitude up to the desired level.

Noise Figure is important in any receiver. Noise figure is defined as follows: In a network (such as an input circuit to a receiver) when an antenna is connected to the input, the noise figure is the ratio of the total signal-to-noise power ratio at the input terminals to the total signal-to-noise power ratio at the output terminals after correcting for the bandwidth of the receiver. If it were possible to build a receiver that generated no noise within its circuits, noise would be introduced into the receiver when it is connected to an antenna. Any signal that is present then must compete with the noise input. Any noise generated within the receiver adds to the input noise and the input signal must be yet stronger to overcome the total noise.

To calculate the noise factor of a network the following equation can be used:

$$NF = \frac{\frac{Sin}{kTB}}{\frac{S\ out}{N\ out}}$$

where NF = noise factor
Sin = Signal power input from the source
k = Boltzmann's constant (1.374×10^{-23})
T = absolute temperature (degrees Kelvin)
B = noise bandwidth of the network
S out = power output of the signal
N out = power output of the noise

If more than one network is used (as would be in a typical receiver), the noise output is cumulative and would be equal to the equation:

$$NF\ 1,2 = NF_1 + \frac{NF_2 - 1}{P_1}$$

Introduction: Continued

where $NF_{1,2}$ = combined noise figure of 2 networks
NF_1 = noise figure of network 1
NF_2 = noise figure of network 2
P_1 = power gain available from network 1.

Input and output impedances will change the amount of output signal and output noise of a network or receiver.

These equations above are given to show how noise and signal are related as to useful output and how the signal input must be strong enough at the antenna terminals to overcome the inherent noise. If the calculations for transmission path gains and losses are correct, the signal arriving at the receiver will be more than the minimum required to produce a useable output. Path calculations are covered in another R.S.A.

Bandwidth is important in the receiver circuits. Bandpass shape is the curve showing output voltage or power of the amplifiers in relation to frequency as the input signal power is held constant. Phase response of an amplifier can become important in some receivers where transients are present. The phase of a signal can be shifted as it passes through an amplifier, thus changing the output data. Instructions for measuring and adjusting the receiver for bandwidth, bandpass shape, and phase tuning are usually covered in detail in the alignment instructions of the manufacturer's maintenance manual.

A typical microwave receiver block diagram is shown in Fig. 2.

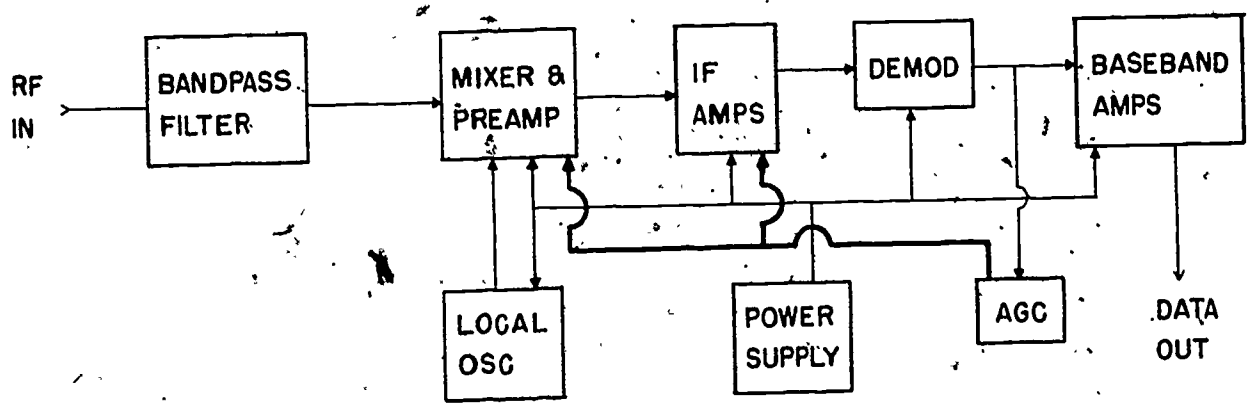

Fig. 2--Microwave Receiver Block Diagram

Introduction: Continued

Alarm circuits are usually optional extras to warn the operating personnel of a failure or to automatically switch to a standby unit. This can minimize or eliminate loss of operating time where "hot standby" equipment is available to switch into service.

The microwave technician will find that the typical microwave receiver is not too different from other receivers that have been encountered in other services. They are designed for ease of maintenance with plenty of test points and metered circuits for quick diagnosis and repair.

References:

1. George Kennedy, ELECTRONIC COMMUNICATIONS SYSTEMS, 2nd Ed., Gregg/McGraw-Hill Book Co. Read pages 536, 537, and 550.

Study Questions:

1. What type mixer is usually employed in a microwave receiver? Why?

2. What devices are usually found operating in the local oscillator circuit?

3. Define "noise figure."

4. Does the noise generated in one stage add to the noise generated in a second stage to produce a total noise signal?

Job: Draw Block Diagram of Microwave Receivers

Objective:

The student will: (1) Draw a block diagram of a typical microwave receiver and (2) Identify the various sections of a microwave receiver by writing the names of the blocks in the diagram.

Job Information:

The student should be familiar with the various blocks of a microwave receiver block diagram. This will enable one to determine signal paths through the receiver and to identify the function or purpose of each section. Review, if necessary, the R.S.A. on microwave receivers.

Tools, Materials, and Equipment:

1. Pencil
2. Paper

References:

1. R.S.A. 10 of Microwave

Procedure:

1. Draw a block diagram of a typical microwave receiver.
2. Label each block of the above diagram with the appropriate name.

Job Questions:

1. How does the block diagram of the microwave receiver differ from the block diagram of a broadcast band receiver?

2. What stage is missing from the block diagram that is typically found in other superheterodyne receivers?

Related Study Assignment No. 11: Microwave Transmission Path Calculations

Objective:

Upon completion of this assignment, the student will: (1) Be acquainted with microwave transmission phenomena in relation to the line of sight propagation, (2) learn how to calculate several values that must be ascertained when installing or modifying microwave transmitting and receiving apparatus, and (3) be required to pass a written examination with a score of 75% or more.

Introduction:

Microwave energy is transmitted or received in a narrow beam comparable to the beam of a spotlight or flashlight. The energy from the transmitter is focused into this narrow beam for several reasons. The two primary reasons are to increase the distance that the signal may be transmitted by concentrating all the energy in one direction and to prevent radiation in a direction that would not be useful to the broadcaster or that would interfere with other services on the same frequency if "scatter" were permitted.

Under actual operating conditions, the microwave beam does not travel in just a single path but takes an infinite number of paths and is influenced by weather, atmosphere, terrain, and man-made obstructions. It may experience refractions in any direction. These factors may cause intermittent fading, poor reception, or a loss of the signal entirely.

To assure that the system provides the greatest possible reliability, the technician must provide the best possible installation of all apparatus and maintain the equipment at optimum operating levels.

Since the signal may arrive at the receiver from several different paths, a system of numbering these paths has been devised and the paths are called Fresnel zones. The first Fresnel zone is the straight line path between the transmitting and receiving antenna. There are a great many other Fresnel zones. According to the numbering system, all even numbered zones are related to the first zone on a half-wave basis and are 180° out of phase and tend to have a canceling effect. All odd numbered zones are related on a full-wave basis to zone 1 and are phase additive. The most desirable signal then is contained in the first zone. If at all possible then, the first zone should provide the best path while eliminating or severely limiting all other zones.

Introduction: Continued

The first zone must be in a path that is free of all obstructions such as buildings, trees, or even the earth itself. A clearance of about .6 times the radius (of the circle that makes up the first zone) is a standard value when calculating the path. If it is assumed that a large obstruction is in the path and the first zone radius needs to be known at the point of obstruction, it can be calculated using

$$r = 72 \sqrt{\frac{xy}{lf}}$$

where r = radius of the zone in feet
x = distance from transmitting antenna to the obstruction in miles
y = distance from the obstruction to the receiving antenna in miles
l = length of the entire path in miles
f = frequency in GHz

Since microwave frequencies are line of sight signals and the earth is curved, it becomes apparent that the signal will encounter the earth at some distance away from the transmitter. The best method to overcome this obstacle (assuming that the path must extend beyond the horizon) is to increase the antenna or passive reflector height above the earth. The transmitting or receiving antenna (or both) can be elevated to provide an unobstructed transmission path. The distance to the horizon may be calculated using the equation:

$$d = 1.23 \sqrt{h}$$

where d = distance to the horizon in miles and
h = the transmitting antenna height in feet.

If the receiver antenna is also elevated, the distance to the horizon is

$$d = 1.23 \left(\sqrt{ht} + \sqrt{hr} \right)$$

where ht = the transmitting antenna height and
hr = the receiving antenna height.

If the earth has an irregular contour over the path, these irregularities must be taken into account. It becomes apparent that some type of plot is needed showing the path, elevations of transmitting and receiving antennas, earth curvature, and obstructions in the path. Several aids are available to help in plotting the path.

One aid that is readily available to use in determining elevations is a topographic map of the area. A map will cover a specific area and several may be needed if the path is long. These maps are available from the United States Geological Survey in Washington for areas east of the Mississippi River or in Denver, Colorado for areas west of the Mississippi. Information contained on these maps is elevations of land areas above sea level, obstructions such as towers, timbered areas, and other important major obstructions.

Introduction: Continued

Another way of determining elevations and obstructions is the use of conventional surveying methods although these are rather time consuming and costly.

Accurate altimeters, either hand held or mounted in aircraft, may be used.

One other very important factor to consider in path calculations is fade margin. If the system is to provide round-the-clock communications it must be able to produce a quality signal even in adverse weather conditions. For 100% reliability in a 24 hour period the system must deliver to the receiver a usuable signal for 86,400 seconds (60 seconds times 60 minutes times 24 hours). For 99% reliability the signal could be inferior or nonexistant for a period of 14 minutes a day. Obviously, this is unsatisfactory so the system must be designed with a higher percentage of reliability in mind.

If the path values are calculated for the minimum signal strength to operate the receiver, there will be no fade margin. Most systems have reserve gain incorporated into the equipment by increasing transmitter power, using a higher gain antenna, adding a receiver preamplifier, or installing relay stations between the originating and terminating points.

The factors to consider when determining path values are transmission line losses (transmitting and receiving), signal loss in free space, antenna gain (transmitter and receiver), and transmitter power output. Other considerations are signal-to-noise ratio, carrier-to-noise ratio, and miscellaneous losses.

Signal-to-noise ratio of a microwave system depends on antenna gains, path attenuation, and equipment design. Antenna gains are determined by the operating frequency, antenna efficiency, and antenna size. Path attenuation is affected by operating frequency and the length of the path. Design considerations in the equipment are thermal noise in the receiver, deviation (in an FM system), and power output of the transmitter.

Carrier-to-noise ratio in an FM microwave system depends on the receiver noise characteristics and the amount of signal received. The receiver noise figure can be obtained from the equipment specifications supplied by the manufacturer and the received signal can be calculated using the equation:

$$C/N = Tp + Gt + Pl + Gr - Nr$$

where C/N = the carrier-to-noise ratio
Tp = the transmitter power in decibels referenced to one milliwatt (dBm)
Gt = the transmitting antenna gain in dB
Pl = the path loss in dB
Gr = the receiving antenna gain in dB and
Nr = the receiver noise figure in dBm.

Introduction: Continued

Example:

Assume the following values

Transmitter output	+23	dBm
Gt (parabola gain)	+40	dB
Pl (x miles at fx)	-138	dB
Gr (parabola gain)	+38.3	dB
Received signal	-36.7	dBm
Receiver noise figure	-(-83.1)	dBm
Carrier to noise =	46.4	dB

The microwave signal suffers loss (as does any other radio wave) as it passes through space. The path attenuation (loss in dB) is calculated using the equation:

$$Pl = 36.6 + 20 \cdot \text{Log}_{10} \text{ FMHz} + 20 \text{ Log}_{10} \text{ D miles}$$

where Pl = path loss in dB
FMHz = carrier frequency in megahertz
D miles = distance of the path
36.6 = a constant

Example: (using assumed values)

$$Pl = 36.6 + 20 \text{ Log}_{10} \text{ 6000 MHz} + 20 \text{ Log}_{10} \text{ 30 miles}$$
$$36.6 + 20\ (3.7781) + 20\ (1.4772)$$
$$36.6 + 75.56 + 29.54$$
$$Pl = 141.7 \text{ dB}$$

This equation comes from a comparison of two isotropic antennas where one antenna is located at each end of the transmission path. The free space loss is the amount of signal that does not arrive at the receiving antenna after being radiated by the transmitting antenna. Since energy radiated by an isotropic antenna is propagated equally in all directions, the total energy radiated is related to the area of a sphere or $\lambda 2/4\pi$, the area of the isotropic antenna. (An isotropic antenna is defined as a hypothetical antenna radiating or receiving equally well in all directions and is sometimes referred to as a unipole. As used with electromagnetic waves, unipoles do not exist physically but represent convenient reference antennas for expressing directive properties of actual antennas.

The path loss between two isotropic antennas may be expressed as the ratio of power radiated to power received or

$$Pl = \frac{Pt}{Pr}$$

where [redacted] the radiated power and
Pr [redacted] power received

Introduction: Continued

or

$$P1 = \frac{r^2\ 4\pi}{\frac{\lambda 2}{4\pi}}$$

where r = the radius of a sphere and
$\frac{\lambda 2}{4\pi}$ = the area of an isotropic antenna.

The area of the sphere is $r^2 4\pi$. See Fig. 1.

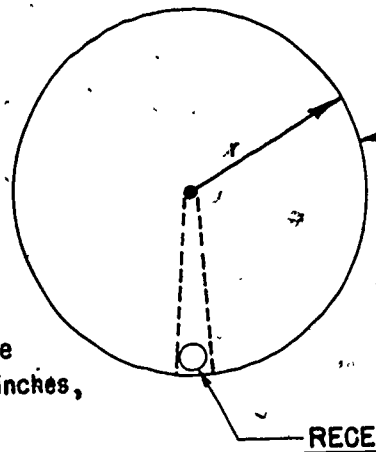

NOTE:
r and λ must be in the same measurement units such as inches, meters, etc.

Fig. 1--Ratio of Power Transmitted to Power Received

Antenna gain of a parabola (or other aperture-type antenna that is circular in shape) may be found using

$$G = E\left(\frac{\pi D}{\lambda}\right)^2$$

where E = efficiency
D = diameter
λ = wavelength

Example: (using assumed values)

$$G = .5\left(\frac{\pi 182.7}{3}\right)^2$$

E = 50%
D = 182.7 cm (6 ft)
λ = 3 cm (λ at 10 GHz)

$$= .5\ \frac{3.14^3 \times 182.7}{3}^{\ 2}$$

$$= .5 \times 36567$$

$$= 18283 \text{ (or in dB} = 10 \text{ Log } 10\ 18283 = 42.6 \text{ dB)}$$

Introduction: Continued

Charts on various sizes of parabolic reflectors and their gains at different frequencies are found in any good communications textbook and these should be referred to when needed.

Signal-to-noise ratio of an FM microwave installation can be calculated using the equation:

$$S/N \text{ (in dB)} = C/N_1 \text{ (in dB)} + 10 \text{ Log}_{10} \frac{BWif}{2F} + 20 \text{ Log}_{10} \sqrt{3} \frac{F \text{ dev}}{F}.$$

Where

S/N (in dB) = signal to noise voltage ratio in dB
C/N_1 (in dB) = carrier to noise in dB
BWif = intermediate frequency bandwidth in MHz
F = highest modulating frequency
Fd = highest microwave frequency deviation in MHz
S = signal in RMS volts
N = noise in RMS volts
C = carrier in RMS volts
N_1 = IF noise in RMS volts

For the power ratio, just square S/N or $(S/N)^2 = (C/N)^2 \times \frac{BWif}{F} \times 3 \times \frac{Fd}{F}^2$

Receiver noise (Nr) power is calculated using the equation:

$$Nr = Nf\ KTB$$

where Nf = receiver noise figure
K = Boltzmann Constant (1.374×10^{-23})
T = temperature in degrees Kelvin
B = bandwidth in hertz.

Miscellaneous losses are found in isolators, skin effect losses in waveguides, misalignment of antennas and/or reflectors, accumulation of foreign matter on antennas, and polarization errors.

The net path loss then is composed of the free space loss plus all other losses minus the antenna gains or PLnet = OL + ML - AG where PL = the free space loss, ML = misc. loss, and AG = gain of all antennas and reflectors. The receiver input signal then is Rin = Tout - PLnet (Rin = Receiver power in, Tout = transmitter output in dBw, and PLnet is the net path loss).

An actual plot of the path should be placed on graph paper, either the kind designed for this purpose or ordinary 10 square paper that has been corrected to a 4/3 ratio to compensate for the earth's curvature. A sheet of this paper is supplied with the job associated with this R.S.A.

Introduction: Continued

Since the earth is rarely a smooth curve but is made up of hills and valleys, small rises or depressions, etc., contour must be taken into account. Assuming a path of 25 miles and a rather high hill at a distance from the transmitter of 10 miles a calculation for correction is necessary. Using the equation $h = \frac{1}{2}\ xy$ gives a value of $\frac{1}{2}\ (10)\ (15) = \frac{1}{2}\ (150) = 75$ft (h = bulge of the earth with a hill at distance x)(y = path minus x)
Next, solve for the radius of the first Fresnel zone using the equation given earlier $r = 72\sqrt{\frac{xy}{lf}} = 72\ \sqrt{\frac{(10)(15)}{(25)(7)}} =$

$$72\ \sqrt{\frac{150}{175}} = 72\ (.926) = 66.65 \text{ ft.}$$

Minimum clearance is .6 times 66.65 ft and equals 40 ft. When the minimum clearance is added to H (75ft) the antennas must be mounted at a height of 115 ft. Any other obstructions in the path would also require additional elevation of the antennas or reflectors.

An evaluation of an assumed path using the following values will give an overview of the calculations that are necessary.

Assume:
- Transmitter power = 4 watts (6 dBw)
- Waveguide loss = 1 dB per 100 ft.
- Waveguide length = 150 ft. per run (2 runs)
- 6 ft. parabola @ 50% efficiency (42.5 dB) 2 dishes
- Path length = 25 miles
- Frequency = 7 GHz
- .6 Fresnel zone clearance
- Free space path loss = 141.5 dB

(6 dBw is a 6 dB increase over a 1 watt reference -3 dB would be a power gain of 2x, another 3 dB would be 2x, hence 2 x 1 watt = 2W and 2 x 2W = 4W or 6 dBw)

PLnet = PL - (antenna gains - waveguide loss)
= 141.5 - (85 - 3)
= 141.5 - 82
= 59.5 dB

Received input power is Pr = Pt - Plnet
Pr = 6 dBw - 59 = -53 dB

and (at 50 ohms input impedance)
Receiver voltage in = Inverse Log $\frac{db}{20}$ x 7.07

RCVR in = Inv log $\frac{-53}{20}$ x 7.07 = .0022 x 7.07 = .015827 volts or 15,827 microvolts

where RCVR in = in volts related to dB at 1 watt and
7.07 = the RMS voltage across a 50 ohm load at 1 watt.

Introduction: Continued

The equipment to be installed or maintained will dictate the amount of power output from the transmitter and the required signal input for the receiver. These values will dictate the antenna gains necessary to overcome all losses associated with the system. If the technician understands the path losses and how to solve problems associated with these losses, the result will be a more reliable communications system.

References:

1. Harold E. Ennes, AM/FM BROADCASTING EQUIPMENT, OPERATIONS AND MAINTENANCE, 1st Ed., Howard W. Sams Publishing Co. Read pages 344--355.

2. John D. Kraus, ANTENNAS, 1950 Ed., Gregg-McGraw-Hill Book Co.

3. Richard K. Moore, TRAVELING-WAVE ENGINEERING, 1960 Ed., Gregg/McGraw-Hill Book Co.

4. George Kennedy, ELECTRONIC COMMUNICATIONS SYSTEMS, 2nd Ed., Gregg/McGraw-Hill Book Co. Read pages 536, 537, and 550.

Study Questions:

1. What are Fresnel zones?

2. What is the minimum clearance for the first Fresnel zone when calculating the path?

3. What aid for path plotting is readily available from the U.S. Geological Survey office?

4. The system should have a reliability of better than what percentage (fade margin)?

5. What factors must be considered when determining path calculations?

6. What is an isotropic antenna?

7. Name four losses (other than free space loss) that are found in microwave systems.

Job: Microwave Path Calculations

Objective:

The student will calculate a typical microwave path using the information supplied.

Tools, Materials, and Equipment:

1. Pencil
2. Paper
3. Ruler
4. Microwave profile chart

References:

1. Harold E. Ennes, AM/FM BROADCASTING EQUIPMENT, OPERATIONS, AND MAINTENANCE, 1st Ed., Howard W. Sams Publishing Co. Read pages 344--355.

2. R.S.A. 11 of Microwave.

Procedure:

1. Calculate the first Fresnel zone radius for a path of 32 miles where the transmitting antenna is located at a height of 200 ft., the receiving antenna is at 500 feet, the frequency is 7 GHz, the distance from the transmitting antenna to a certain obstruction 122 ft. high at 17 miles and the distance from the obstruction to the receiving antenna is 15 miles. Transmitter power is 2 watts.
2. Calculate the clearance needed for the first Fresnel zone in the problem in Step 1.
3. Calculate the distance to the horizon in tha above problem.
4. Calculate the path loss in dB for Step 1.
5. Calculate the antenna gain of a parabolic reflector with a diameter of 8 ft. and an efficiency of 62% operating at 7 GHz.
6. Calculate the receiver input power in dB.
7. Calculate the receiver input voltage (assume 50 ohm input impedance and no transmission line losses).

Job Questions:

1. Why must the height of a hill or tall building be taken into account when calculating a microwave path?

Job Questions: Continued

2. What consideration would be necessary if the transmitting and receiving antennas were mounted on towers whose bases were not at the same distance above sea level?

3. Why is the microwave path calculated to eliminate all the Fresnel zones except the first one?

4. Why is reliability (operating time percentage) important as related to the microwave system?

Related Study Assignment No. 12: Multiplex

Objective:

Upon completion of this assignment, the student will become familiar with the various equipment that comprises a multiplex system for transmission of data on a microwave system.

Introduction:

Multiplexing (commonly abbreviated MUX) is the method or system used to transmit and receive 2 or more signals while using only one transmitter carrier wave as a medium.

Various systems are in use today and it would be impossible to cover every manufacturer's equipment so only a typical system will be discussed in this R.S.A.

An overall block diagram of a multiplex system is shown in Fig. 1. A system can be built to include more and more data channels by "pyramiding" or adding additional units.

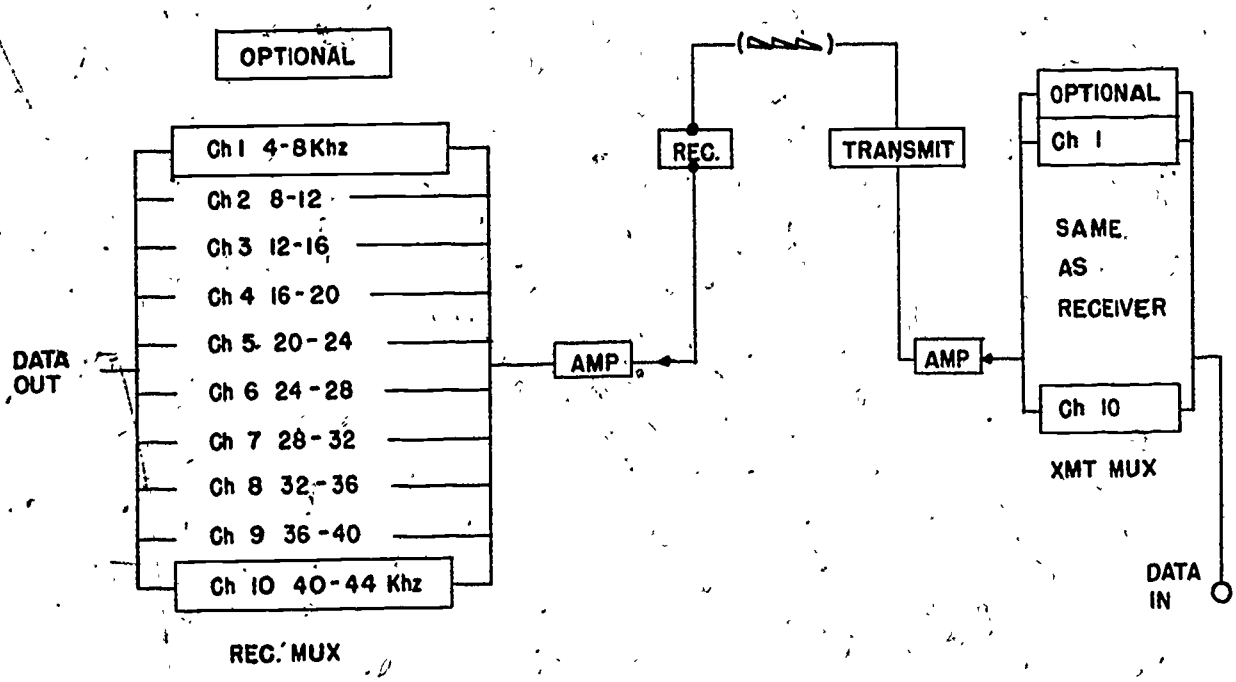

Fig. 1--Basic MUX System

Introduction: Continued

Major units of the system are modulators, crystal oscillators, channel amplifiers, group amplifiers, demodulators, and power supply. (Here again, a manufacturer may call one of the components by another name.)

If the system is to carry voice messages it will be divided into channels that are 4 kHz wide (since only about 3 kHz is needed to produce adequate voice communications). Normally, a channel amplifier will contain approximately 10 individual channels beginning at 4 kHz and going up to 44 kHz with an optional channel from 0 to 4 kHz. These channels are numbered 1 through 10 with the optional channel referred to as service channel, etc. An amplifier that will pass all the frequencies contained in the ten channels follows the channel amplifier output.

If an additional ten voice channels are needed, a second channel amplifier identical to the first is added with its output fed to the same type broadband amplifier. At this point it is necessary to heterodyne the output of the broadband amplifier to frequencies other than 4 to 44 kHz so a group modulator (or oscillator, etc.) is added (usually in the range of 52--92 kHz). This output will use SSB transmission and will use either upper or lower sidebands of each channel. A third set of voice channels may be added using 4--44 kHz channel amplifiers as in the first two sets. This set of channels would then use the opposite sideband of the one used in set number two.

Since the voice channels are each 4 kHz wide there must be some filters located within the circuit to minimize cross talk between channels. These filters would need to be designed to have very sharp leading and trailing edges on their response curves. Some manufacturers use crystal filters which are quite expensive but very effective. Filters are used extensively throughout the entire frequency range of the multiplex system and will appear in the block and schematic diagrams of the various brands on the market today.

MUX are not limited to use with microwave relay systems but are used extensively by telephone companies, industry, and governmental agencies. They are fed into telephone wire circuits (in several configurations), VHF, UHF, or microwave radio circuits. The communications student who goes into the field of servicing apparatus used to exchange information will sooner or later encounter a multiplex operation.

Study the block diagram taking special note of the frequencies used as input and output to each block. This is, of course, only one of the systems that are in use today but represents the basic idea of multiplex transmission systems.

References:

1. George Kennedy, ELECTRONIC COMMUNICATIONS SYSTEMS, 2nd Ed., Gregg/McGraw-Hill Book Co. Read pages 109--110, 526--532, and 593--594.

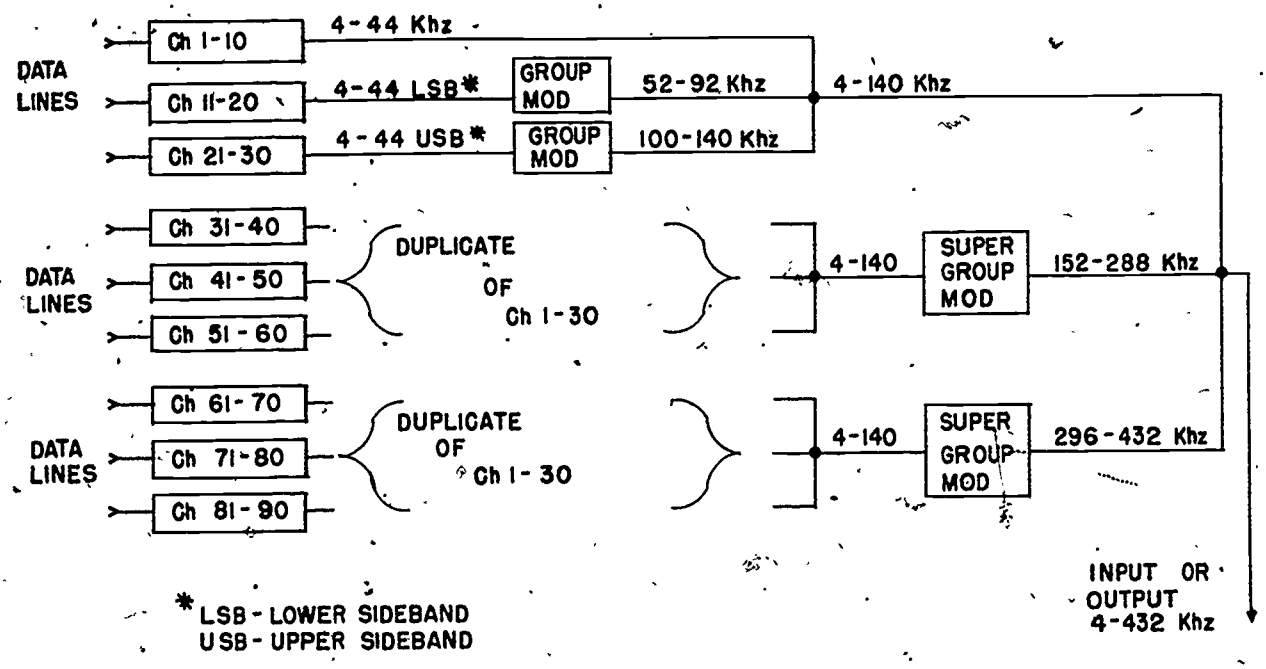

Fig. 2--A 90 Channel MUX
(without filters being shown)

LOUISIANA
VOCATIONAL–TECHNICAL EDUCATION

MICROWAVE

Test Book

1979

LOUISIANA
VOCATIONAL-TECHNICAL EDUCATION

MICROWAVE

1979

Published By

STATE OF LOUISIANA
VOCATIONAL CURRICULUM DEVELOPMENT
AND RESEARCH CENTER
P. O. Box 657
Natchitoches, Louisiana 71457

in cooperation with

TRADE AND INDUSTRIAL EDUCATION SECTION
DIVISION OF VOCATIONAL EDUCATION
STATE DEPARTMENT OF EDUCATION
P. O. Box 44064
Baton Rouge, Louisiana 70804

This publication was developed by the Vocational Curriculum Development and Research Center of Natchitoches, Louisiana, pursuant to a contract with the Research Coordinating Unit, Louisiana State Department of Education under Program Improvement and Supportive Services monies.

"This public document was published at a cost of $10 per copy by the Vocational Curriculum Development and Research Center for Louisiana Vocational-Technical Education Programs under authority of Act 355 of 1974. This material was printed in accordance with the standards for printing by state agencies established pursuant to R.S. 43:31."

Table Of Contents

MICROWAVE

State Vocational-Technical Schools of Louisiana

MICROWAVE

R.S.A. 1

TEST SHEET

Introduction to Microwaves

Name:_____ Date:_____ Grade:_____

DIRECTIONS: In the blank space before each statement, write the letter corresponding with the correct answer.

_____ 1. Most microwave equipment operates in the range of

A. 1 kMHz to 50 GHz
B. 1 GHz to 50 GHz
C. 1000 MHz to 50 GHz
D. A and B above
E. A, B, and C above

_____ 2. Modern day usage of microwaves does not include

A. point-to-point data transmission.
B. frequencies up to 100,000 GHz.
C. special transmission lines.
D. parabolic antennas.
E. omnidirectional antennas.

_____ 3. A microwave frequency of 5.88 GHz has a wavelength of

A. .5 meter.
B. .05 meter.
C. 50 cm.
D. 1.75 inches.
E. .159 inch.

_____ 4. One characteristic of microwave circuits is

A. all vacuum tube construction.
B. all solid state construction.
C. critical component placement.
D. standard electronic components are always used.
E. none of the above.

_____ 5. A parabolic antenna is

A. a special circular polarized antenna.
B. a special collinear array.
C. a special unidirectional antenna.
D. a special multidirectional antenna.
E. a special slot antenna.

TEST SHEET: Continued

_____ 6. Microwaves are used to cook food by

A. x-ray radiation.
B. rapid reversal of current flow.
C. heating from anode heat sinks.
D. narrow beams focused on containers.
E. molecular structure change.

_____ 7. Transmission of microwaves can be

A. on regular transmission lines.
B. along the surface of conductors.
C. along special hollow pipes.
D. B and C above.
E. A, B, and C above.

_____ 8. One special precaution to observe while working around microwave equipment is

A. wear protective clothing.
B. never touch active transmission lines.
C. adjust only with insulated tuning tools.
D. never look into open waveguides.
E. all of the above.

_____ 9. Voltages and currents in microwave transmission lines

A. are propagated as in all other transmission lines.
B. are of a secondary consideration.
C. are always at right angles to the waveguide large dimension.
D. require silver plated lines.
E. propagate only where air is the dielectric.

_____ 10. Twice the wavelength of the dominant mode of a rectangular waveguide is known as the

A. operating frequency.
B. guide wavelength.
C. cutoff frequency.
D. traverse frequency.
E. resonant frequency.

State Vocational-Technical Schools of Louisiana

MICROWAVE

R.S.A. 2

TEST SHEET

Microwave Systems

Name: _____ Date: _____ Grade: _____

DIRECTIONS: In the blank space before each statement, write the letter corresponding with the correct answer.

____ 1. Deemphasis is employed primarily in the

A. modulator.
B. oscillator.
C. receiver.
D. baseband amplifier.
E. waveguide.

____ 2. A weatherproof covering for a microwave antenna is called a

A. weatherhead.
B. parabola.
C. buttonhook.
D. radome.
E. diffuser.

____ 3. Moisture accumulation in waveguides can be prevented by

A. pressurized lines.
B. weatherproof antennas.
C. long horizontal runs.
D. sealing klystron cavities.
E. none of the above.

____ 4. The number of channels a baseband will accept is determined by

A. the carrier frequency.
B. the data levels.
C. the wavelength in centimeters.
D. the preemphasis network.
E. the isolator frequency.

____ 5. Typical gain of a parabolic antenna may be

A. 20,000 to 40,000 dB.
B. 2,000 to 40,000 dB.
C. 2,000 to 40,000.
D. 20,000 to 40,000
E. 20,000 to 400,000.

TEST SHEET: Continued

____ 6. Discontinuities between the dish and the waveguide are corrected by

A. using shock mounts on the dish.
B. using flexible waveguides.
C. using shock mounts on the transmission line.
D. tightening bolts properly.
E. none of the above.

____ 7. One microwave oscillator that contains several tuned cavities is the

A. magnetron.
B. back wave oscillator.
C. traveling wave tube.
D. reflex klystron.
E. tunnel diode.

____ 8. A dent in a waveguide

A. increases swr.
B. increases power losses.
C. does not change propagation characteristics.
D. A and B above.
E. none of the above.

____ 9. Microwave transmitters are usually

A. amplitude modulated
B. frequency modulated.
C. pulsed.
D. operated A0 (A zero).
E. operated F0 (F zero).

____ 10. Which is not a true diode?

A. impact avalanche diode
B. hot-carrier diode
C. PIN diode
D. step recovery diode
E. Gunn diode

TEST SHEET

Microwave Oscillators

Name: _____ Date: _____ Grade: _____

DIRECTIONS: In the blank space before each statement, write the letter corresponding with the correct answer.

_____ 1. A reflex klystron

A. is tuned mechanically.
B. is usually amplitude modulated.
C. contains no grid.
D. produces relatively high power output.
E. has electrical and mechanical adjustments.

_____ 2. A magnetron

A. has a high average power output.
B. has a high positive anode potential.
C. is used primarily in microwave relay systems.
D. has a highly negative cathode and grounded anode.
E. A and B above.

_____ 3. A helix is

A. a coil external of the TWT.
B. an internal coil of the TWT.
C. at a high negative potential.
E. the cavity portion of the TWT.
E. a lossy coil surrounding the anode .

_____ 4. A BWO

A. has a two-wire helix and unbalanced output.
B. has a tunable cavity.
C. is voltage tunable.
D. uses a lossy attenuator.
E. has low efficiency.

_____ 5. A varactor

A. is a good cavity oscillator.
B. is tuned using a metal screw.
C. is a good frequency multiplier.
D. has a linear voltage drop across it.
E. A and B above.

TEST SHEET: Continued

_____ 6. PIN diodes are useful as

A. microwave detectors.
B. modulators.
C. waveguide switches
D. A, B, and C above.
E. B and C above.

_____ 7. Gunn diodes

A. have lower power output than LSA diodes.
B. are not true microwave oscillators.
C. are unable to withstand peak powers.
D. contain two junctions instead of one.
E. have relatively high power output at 50 GHz.

_____ 8. A ferrite isolator is used as

A. a waveguide insulator.
B. a waveguide switch.
C. parallel resonant circuit to pass energy along a waveguide.
D. a wavetrap.
E. a waveguide mixer.

_____ 9. A YIG resonator can be used as

A. a special cavity resonator.
B. a waveguide tuning device.
C. a tunable band-pass filter.
D. a frequency measuring indicator.
E. a waveguide dummy load.

_____ 10. A circulator is a

A. type of directional coupler.
B. special oscillator-mixer.
C. type of oscillator feedback circuit.
D. vswr indicator.
E. a waveguide rotating joint.

State Vocational-Technical Schools of Louisiana

MICROWAVE

R.S.A. 4

PAGE 1 OF 2

TEST SHEET

Microwave Modulators

Name:_____ Date:_____ Grade:_____

DIRECTIONS: In the blank space before each statement, write the letter corresponding with the correct answer.

_____ 1. Klystrons are usually

A. frequency modulated.
B. amplitude modulated.
C. double sideband supressed carrier modulated.
D. single sideband supressed carrier modulated.
E. vestigal sideband modulated.

_____ 2. Input data to the modulator is supplied by the

A. differential amplifier.
B. multiplex amplifier.
C. baseband amplifier.
D. circulator.
E. duplexer.

_____ 3. Bandwidths encountered in microwave systems may be

A. 5 kHz or less.
B. 50 kHz to 40 MHz.
C. 5 kHz to 50 kHz.
D. 5 kHz to 40 kHz.
E. 50 kHz or less.

_____ 4. Modulating voltages are usually impressed upon the klystron

A. cavity.
B. control grid.
C. cavity grid.
D. repeller.
E. anode.

_____ 5. The bandwidth of a television video signal is

A. 4.5 kHz.
B. 6.8 kHz.
C. 6.8 MHz.
D. 4.5 MHz.
E. 7.6 MHz.

TEST SHEET: Continued

_____ 6. Modulation in a transistor microwave oscillator circuit is usually applied to the

A. baseband amplifier voltage.
B. driver amplifier voltage.
C. output amplifier voltage.
D. AFC amplifier voltage.
E. transistor bias voltage.

_____ 7. A microwave transmitter may be modulated using

A. amplitude modulation.
B. frequency modulation.
C. phase modulation.
D. B and C above.
E. A, B, and C above.

_____ 8. A station that is licensed as 50F3 operates with

A. 50 kilowatts frequency modulated.
B. 50 watts frequency modulated.
C. 50 Hz bandwidth frequency modulated.
D. 50 kHz bandwidth frequency modulated.
E. none of the above.

_____ 9. The bandwidth is usually determined by the

A. baseband amplifier.
B. transmitter oscillator.
C. preemphasis network.
D. transistor bias network.
E. reflex klystron cavity frequency.

_____ 10. Input levels to the modulator are adjusted by using a

A. variable pad in the multiplex system.
B. variable pad in the klystron circuit.
C. variable pad in the baseband amplifier.
D. variable pad in the transmitter oscillator.
E. variable pad in the bias network.

TEST SHEET

Microwave Transmission Lines

Name: _____ Date: _____ Grade: _____

DIRECTIONS: In the blank space before each statement, write the letter corresponding with the correct answer.

_____ 1. A waveguide

A. is a good low frequency transmission line.
B. is made from an infinite number of half-wave shorted stubs.
C. has a high dielectric loss.
D. is simpler to construct than coaxial cable.
E. propagates energy at the speed of light.

_____ 2. Cutoff frequency of a waveguide is

A. determined by its narrow dimension.
B. determined by the size of the cavity resonator.
C. determined by the half-wave length dimension.
D. determined by the dielectric constant.
E. determined by the length of the line.

_____ 3. A line formed into a loop in a waveguide magnetic field is called

A. a mode.
B. a stress.
C. an E line.
D. an H line.
E. a boundary condition.

_____ 4. The magnetic field in a waveguide

A. is maximum near the edge of the guide.
B. is maximum near the center of the guide.
C. is perpendicular to the surface of the guide.
D. can exist alone in a guide.
E. reverses at quarter-wave intervals.

_____ 5. E lines are

A. lines of electrostatic stress
B. tangent to the walls of guide.
C. perpendicular to the walls of the guide.
D. A and B above.
E. A and C above.

TEST SHEET: continued

____ 6. A TE 0,1 mode in a rectangular waveguide contains

A. a zero change across the wide dimension.
B. a zero change across the narrow dimension.
C. two maximums counted around the perimeter.
D. a zero at each side with a maximum in the center across the narrow dimension.
E. a maximum at top and bottom and a zero in the center across the side dimension.

____ 7. Group velocity is

A. the axial velocity of a wavefront.
B. the amount of phase change per unit length.
C. at the speed of light.
D. greater than the speed of light.
E. the diagonal velocity of a wavefront.

____ 8. The angle of incidence in a waveguide

A. increases with frequency.
B. decreases with frequency.
C. does not change with frequency.
D. can never reach 90 degrees.
E. none of the above.

____ 9. A waveguide whose dimensions are 1.4 cm by 2.8 cm will not propagate a signal of

A. 21.43 GHz.
B. 10.715 GHz
C. 1.3 cm.
D. 2.7 cm.
E. 5.5 cm.

____ 10. Crossing angle of a wavefront in a guide is

A. a function of wavelength and dominant mode.
B. a function of frequency and wavelength alone.
C. a function of dominant mode alone.
D. a function of wavelength and cross sectional dimension.
E. a function of cross sectional dimension alone.

TEST SHEET

Transmission Lines

Name:_____ Date:_____ Grade:_____

DIRECTIONS: In the blank space before each statement, write the letter corresponding with the correct answer.

_____ 1. The amount of excitation to a waveguide when using a probe may be controlled by

A. a potentiometer.
B. a rheostat.
C. shielding.
D. a loop of wire.
E. none of the above.

_____ 2. A horn antenna

A. matches line impecance to space
B. is directional.
C. minimizes reflections.
D. A and B above.
E. A, B, and C above.

_____ 3. The radius of a bend in a waveguide section is

A. one-quarter wavelength or less.
B. one-half wavelength or more.
C. one wavelength long or less.
D. two wavelengths or more.
E. one wavelength or more.

_____ 4. A 90 degree bend usually consists of two 45 degree bends located

A. one-quarter wavelength apart.
B. one-half wavelength apart.
C. one wavelength apart.
D. two wavelengths apart.
E. more than two wavelengths apart.

_____ 5. A waveguide choke joint is a

A. tapered section on the narrow dimension.
B. waveguide section with internal rf chokes.
C. a low loss connection.
D. section utilizing a quarter-wave short circuit.
E. C and D above.

TEST SHEET: Continued

_____ 6. The impedance of a rectangular waveguide is

A. directly proportional to the narrow dimension.
B. inversely proportional to the narrow dimension.
C. directly proportional to the wide dimension.
D. inversely proportional to the dimension.
E. the same for all sizes of guides.

_____ 7. A wedge to terminate a guide is placed

A. parallel to the magnetic field to cut E lines.
B. perpendicular to the magnetic field to cut E line.
C. parallel to the magnetic field to cut H lines.
D. perpendicular to the magnetic field to cut H lines.
E. none of the above.

_____ 8. A choke joint may have a loss of about.

A. .01 dB
B. .03 dB
C. .05 dB
D. .1 dB
E. .3 dB

_____ 9. A waveguide device used to measure incident and reflected power is a

A. directional coupler.
B. twisted section.
C. termination.
D. rotating joint.
E. all of the above.

_____ 10. The proper location for a capacitive tuning screw on a waveguide may be found by using a

A. flap attenuator.
B. directional coupler.
C. choke joint.
D. slide screw tuner.
E. twisted section.

State Vocational-Technical Schools of Louisiana

MICROWAVE

R.S.A. 7

PAGE 1 OF 1

TEST SHEET

Detectors and Mixers

Name: _____ Date: _____ Grade: _____

DIRECTIONS: Circle the "T" if the statement is true and the "F" if the statement is false.

T F 1. The input impedance of a silicon crystal diode is low.

T F 2. A silicon crystal diode can be used only as a demodulator detector.

T F 3. Impedance matching between the crystal diode and its output circuit is very important.

T F 4. The operating impedances of the diode are dependent on the construction of the diode rather than circuit parameters.

T F 5. Rectified current output from a silicon crystal diode is usually in the order of .1 ma.

T F 6. Rectified current output is proportional to the effective signal voltage.

T F 7. Signal output of the diode will be affected by frequency, load, type of crystal, bias and quantity of signal input.

T F 8. A silicon crystal diode may not be used as a mixer in heterodyne type receivers.

T F 9. A silicon crystal diode is constructed of a silicon wafer and a barium wire.

T F 10. Signal conversion using a silicon crystal diode produces a power gain at the output of the mixer stage.

TEST SHEET

Microwave Antennas

Name: _____ Date: _____ Grade: _____

DIRECTIONS: Match the following with the best answer. Some answers may be used more than once. Each answer counts 5 points.

1. Determines beam width____ ____
2. Selects radiation pattern____ ____
3. A radiator and reflector____
4. Uses phase velocity action____
5. A flared waveguide____
6. Requires illumination____
7. Frequency sensitive____
8. Very high power gain____
9. Feed system____
10. Batwing____
11. Grid____
12. Determines power gain____ ____
13. Affects number of lobes____
14. Causes unnecessarily large lobe____
15. Minimizes minor lobes____
16. Very narrow beam width____
17. Cone____

ANSWERS:

A. lens antenna
B. slot antenna
C. parabolic reflector
D. angle of flare
E. horn antenna
F. buttonhook
G. length of horn
H. proper design
K. horn shape
M. parabolic antenna
N. highly directional feed
P. passive reflector

State Vocational-Technical Schools of Louisiana

MICROWAVE

R.S.A. 9

PAGE 1 OF 1

TEST SHEET

Smith Chart

Name: _____ Date: _____ Grade: _____

DIRECTIONS: Answer each of the following questions.

1. Calculate the sending end impedance to a line of 300 ohms that is 40 feet long at a frequency of 30 MHz. The line is terminated with a pure resistance of 450 ohms.

2. Determine the sending end impedance of a line terminated with a pure reactance of 1.8 Zo and 1.17 wavelengths long.

3. Calculate the length of a matching shorted stub for a line with a characteristic impedance of 100 ohms and terminated with a complex load of 65 + j20.

4. Calculate the distance that the stub will be located from the load.

TEST SHEET

Microwave Receivers

Name: _____ Date: _____ Grade: _____

DIRECTIONS: Circle the "T" if the statement is true and the "F" if the statement is false.

T F 1. Microwave receivers usually do not employ a radio frequency amplifier stage.

T F 2. A balanced mixer is used in microwave receivers to assure that the radio frequency signal and local oscillator signal are equal.

T F 3. Local oscillators in microwave receivers are always klystron tubes because of the frequencies at which they must oscillate.

T F 4. A popular intermediate frequency amplifier in use in microwave receivers today operates at 455 kHz.

T F 5. Bandwidth is one of the greatest considerations of a microwave receiver.

T F 6. Microwave receivers do not need automatic gain controls because of the high gains of transmitting and receiving antennas.

T F 7. Noise figure is defined as the ratio of signal-to-noise power ratio at the input to the total signal-to-noise power ratio at the output.

T F 8. Noise in each stage of a microwave receiver is added for a cumulative output.

T F 9. The signal arriving at the receiver must be greater than the noise input to overcome the noise to become useful output.

T F 10. A receiver with no inherent internal noise will have no noise output once an antenna is connected.

State Vocational-Technical Schools of Louisiana

MICROWAVE

R.S.A. 11

PAGE 1 OF 1

TEST SHEET

Microwave Transmission Path Calculations

Name: _____ Date: _____ Grade: _____

DIRECTIONS: Circle the "T" if the statement is true and the "F" if the statement is false.

T F 1. Path numbering of microwave signals is called parabolic zones.

T F 2. Even numbered zones are 180 degrees out-of-phase with the first signal zone in the microwave path.

T F 3. A standard clearance of .06 times the radius of the first path zone is used to calculate the microwave path.

T F 4. When calculating the microwave path one needs only to know the curvature of the earth.

T F 5. Signal-to-noise ratio in a microwave system depends on equipment design.

T F 6. An isotropic antenna is called a monopole antenna.

T F 7. The net path loss is free space loss minus all other losses plus antenna gains.

T F 8. Reserve gain is sometimes referred to as fade margin.

T F 9. Antenna gain depends on the operating frequency.

T F 10. Path attenuation depends on the operating frequency.

TEST SHEET

Multiplex

Name: _____ Date: _____ Grade _____

DIRECTIONS: On the blank line(s) provided, write the word(s) that correctly complete each statement.

1. Multiplexing is a system designed to _____.
2. "Pyramiding" is a term used to indicate that a more complex system may be built by _____.
3. A voice channel is usually _____ kHz wide as provided by the channel amplifier.
4. In a typical system containing 90 channels, a group modulator will accept an input from _____ single channels.
5. In a typical system the total frequency output is from _____ to _____ kHz (for a 90 channel system).
6. A channel unit will have a total frequency output of _____ to _____ kHz.
7. To separate one channel from another and minimize cross talk, some manufacturers use _____ _____.
8. Output of the channel amplifier of channels 21--30 is usually _____ sideband.
9. MUX may be used with either radio or _____ circuits.
10. Voice frequencies up to _____ kHz are used in a typical multiplex system.

LOUISIANA
VOCATIONAL-TECHNICAL EDUCATION

MICROWAVE

Answer Book

1979

LOUISIANA
VOCATIONAL-TECHNICAL EDUCATION

MICROWAVE

1979

Published By

STATE OF LOUISIANA
VOCATIONAL CURRICULUM DEVELOPMENT
AND RESEARCH CENTER
P. O. Box 657
Natchitoches, Louisiana 71457

in cooperation with

TRADE AND INDUSTRIAL EDUCATION SECTION
DIVISION OF VOCATIONAL EDUCATION
STATE DEPARTMENT OF EDUCATION
P. O. Box 44064
Baton Rouge, Louisiana 70804

This publication was developed by the Vocational Curriculum Development and Research Center of Natchitoches, Louisiana, pursuant to a contract with the Research Coordinating Unit, Louisiana State Department of Education under Program Improvement and Supportive Services monies.

"This public document was published at a cost of $10 per copy by the Vocational Curriculum Development and Research Center for Louisiana Vocational-Technical Education Programs under authority of Act 355 of 1974. This material was printed in accordance with the standards for printing by state agencies established pursuant to R.S. 43:31."

Answers to Test

1. E
2. E
3. B
4. C
5. C
6. B
7. E
8. D
9. B
10. C

Answers to Job Questions

1. $Fcm = \frac{300}{FMHz} \times 100$

2. 2,150,000,000 Hz

3. 7152 MHz

4. 7.152 KMHz

Answers to Test

1. C
2. D
3. A
4. B
5. D
6. B
7. A
8. D
9. B
10. E

Answers to Test

1. E
2. D
3. B
4. C
5. C
6. E
7. A
8. B
9. C
10. A

MICROWAVE

Answers to Test

1. A
2. C
3. B
4. D
5. D
6. E
7. E
8. D
9. A
10. C

Answers to Test

1. D
2. C
3. D
4. A
5. E
6. B
7. A
8. B
9. E
10. D

MICROWAVE

Answers to Test

1. C
2. E
3. D
4. A
5. C
6. A
7. D
8. B
9. A
10. D

Answers to Job Questions

1. 2.7 cm and 1.06 inches
2. 4.47 cm and 1.76 inches
3. 27270 MHz
4. 3.39 cm and 1.33 inches
5. 9524 MHz

MICROWAVE

Answers to Test

1. T
2. F
3. T
4. F
5. F
6. F
7. T
8. F
9. F
10. F

Answers to Test

1. D and M
2. C and K
3. M
4. A
5. E
6. C
7. A
8. M
9. F
10. B
11. P
12. C and D
13. G
14. N
15. H
16. M
17. E

State Vocational-Technical Schools of Louisiana

MICROWAVE

Answers to Test R.S.A. 9

PAGE 1 OF 3

IMPEDANCE OR ADMITTANCE COORDINATES

TEST QUESTION 1

(1) $\frac{450}{300}$ = 1.5 VSWR

(2) DRAW CIRCLE

(3) READ "R"

(4) READ "j"

LINE = 1.22 λ

$\frac{40\text{ ft.}}{32.8\text{ ft.}} = 1.22$

$\lambda = \frac{300}{fmh} = \frac{300}{30} =$ 10 METERS

10M = 32.8 ft.

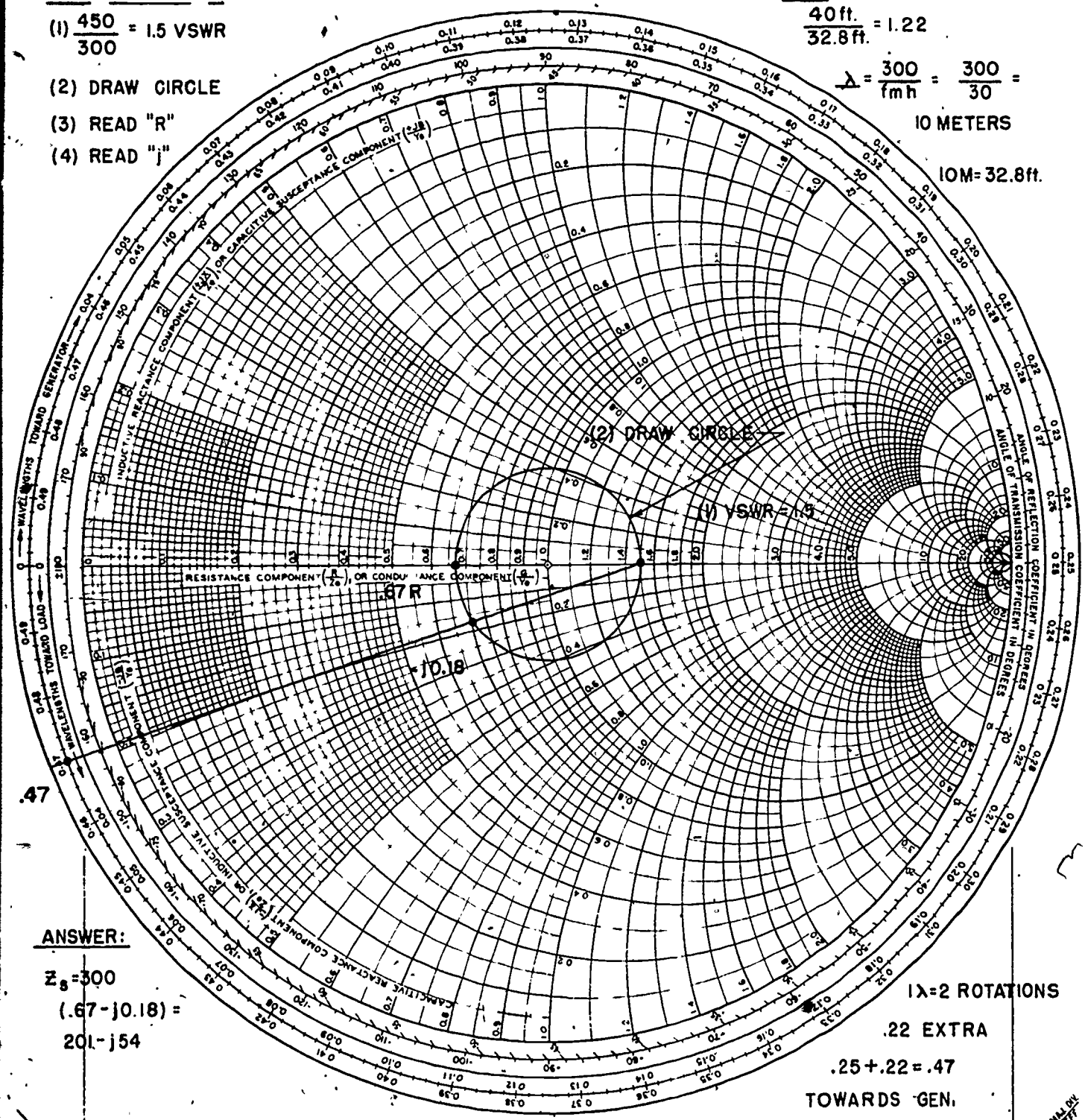

ANSWER:

Z_s = 300 (.67 - j0.18) = 201 - j54

1λ = 2 ROTATIONS

.22 EXTRA

.25 + .22 = .47

TOWARDS GEN.

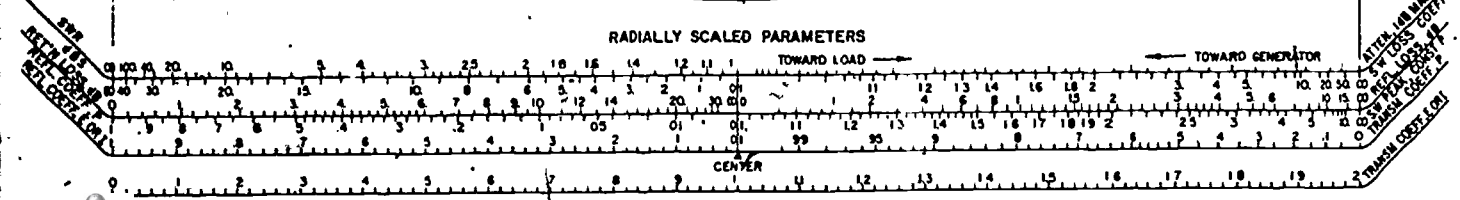

A MEGA-CHART

IMPEDANCE OR ADMITTANCE COORDINATES

TEST QUESTION 2

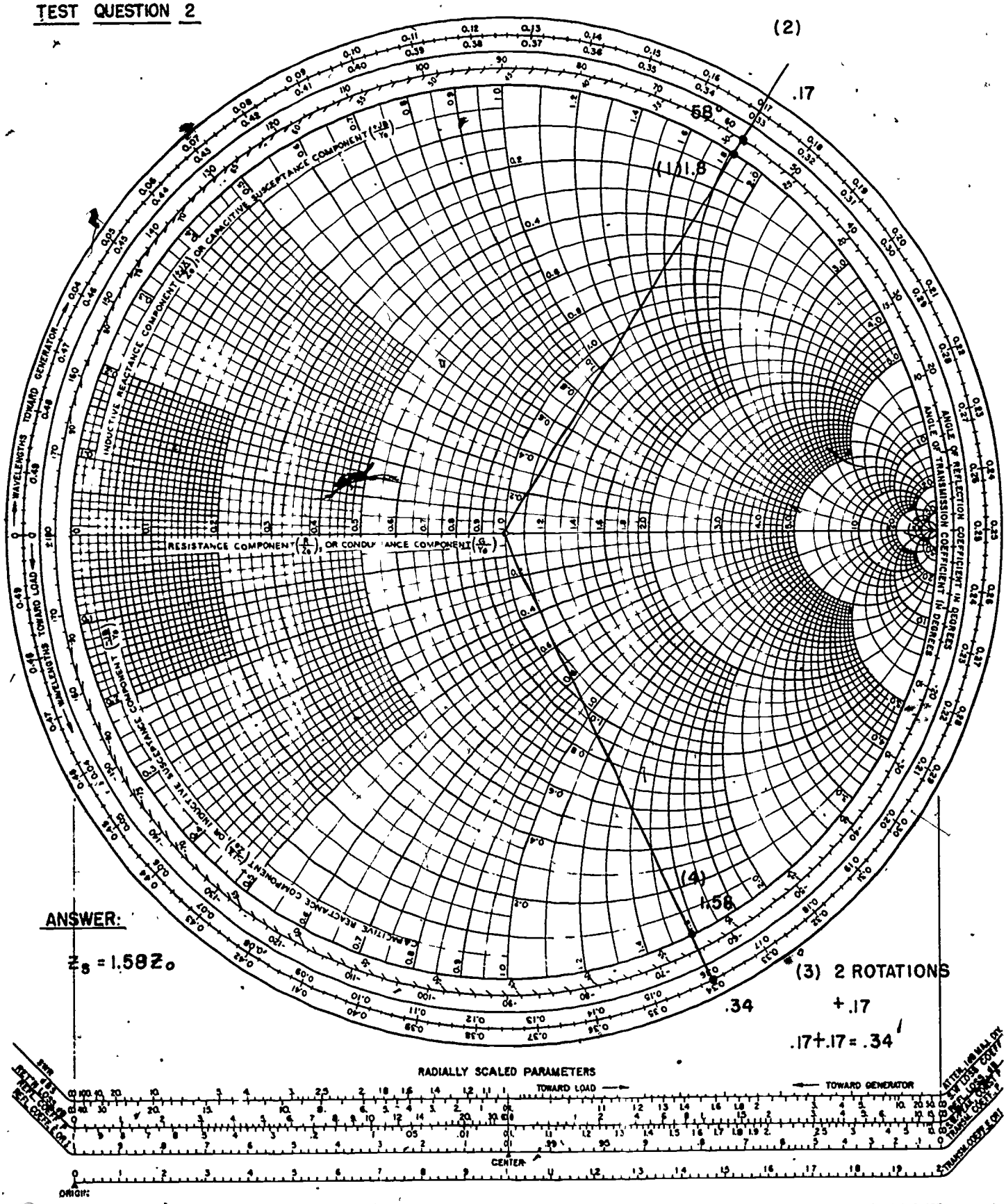

ANSWER:

$Z_s = 1.58 Z_o$

(3) 2 ROTATIONS

+ .17

.17 + .17 = .34

A MESA-CHART

State Vocational-Technical Schools of Louisiana

MICROWAVE

Answers to Test R.S.A. 9

IMPEDANCE OR ADMITTANCE COORDINATES

TEST QUESTION 3 & 4

ANSWER # 4

.145
-.05
.095 =
DISTANCE FROM LOAD

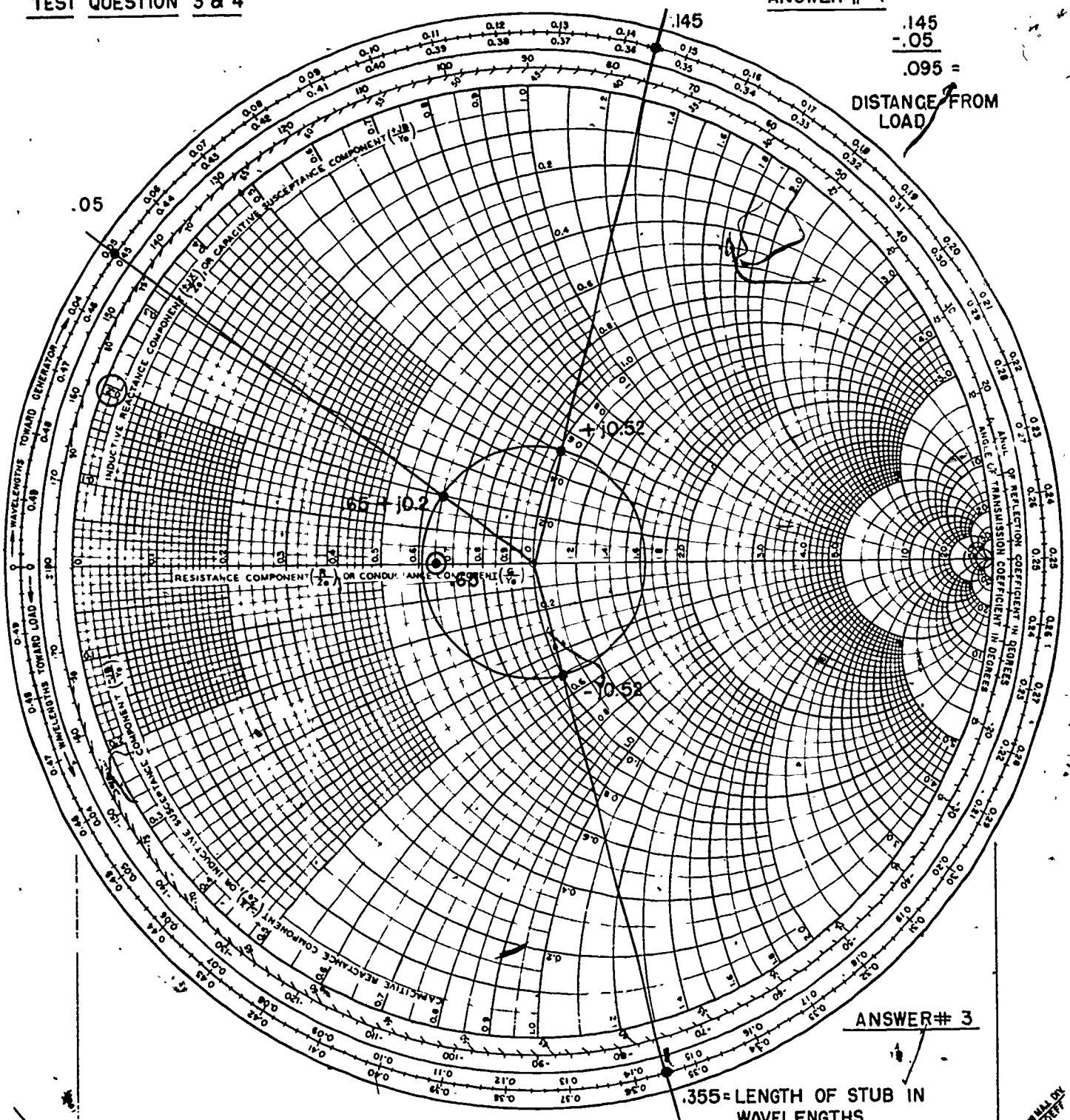

ANSWER# 3

.355 = LENGTH OF STUB IN WAVELENGTHS

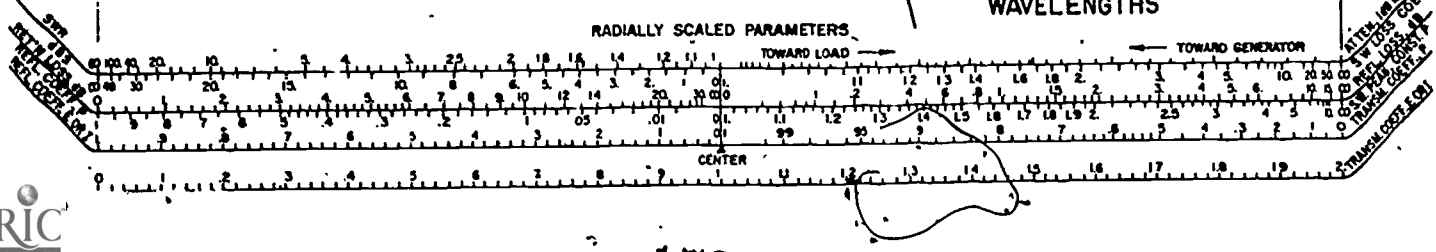

Answers to Test

1. T
2. F
3. F
4. F
5. T
6. F
7. T
8. T
9. T
10. F

Answers to Job Questions

1. Local oscillator frequency, intermediate frequency, and crystal mixer followed by a preamplifier are major differences.

2. The radio frequency amplifier is usually omitted.

MICROWAVE

TEST SHEET

Answers to Test

1. F
2. T
3. F
4. F
5. T
6. F
7. F
8. T
9. T
10. T

State Vocational-Technical Schools of Louisiana

MICROWAVE

MICROWAVE
PROFILE CHART

ANSWERS TO JOB _____

PAGE 1 OF 1

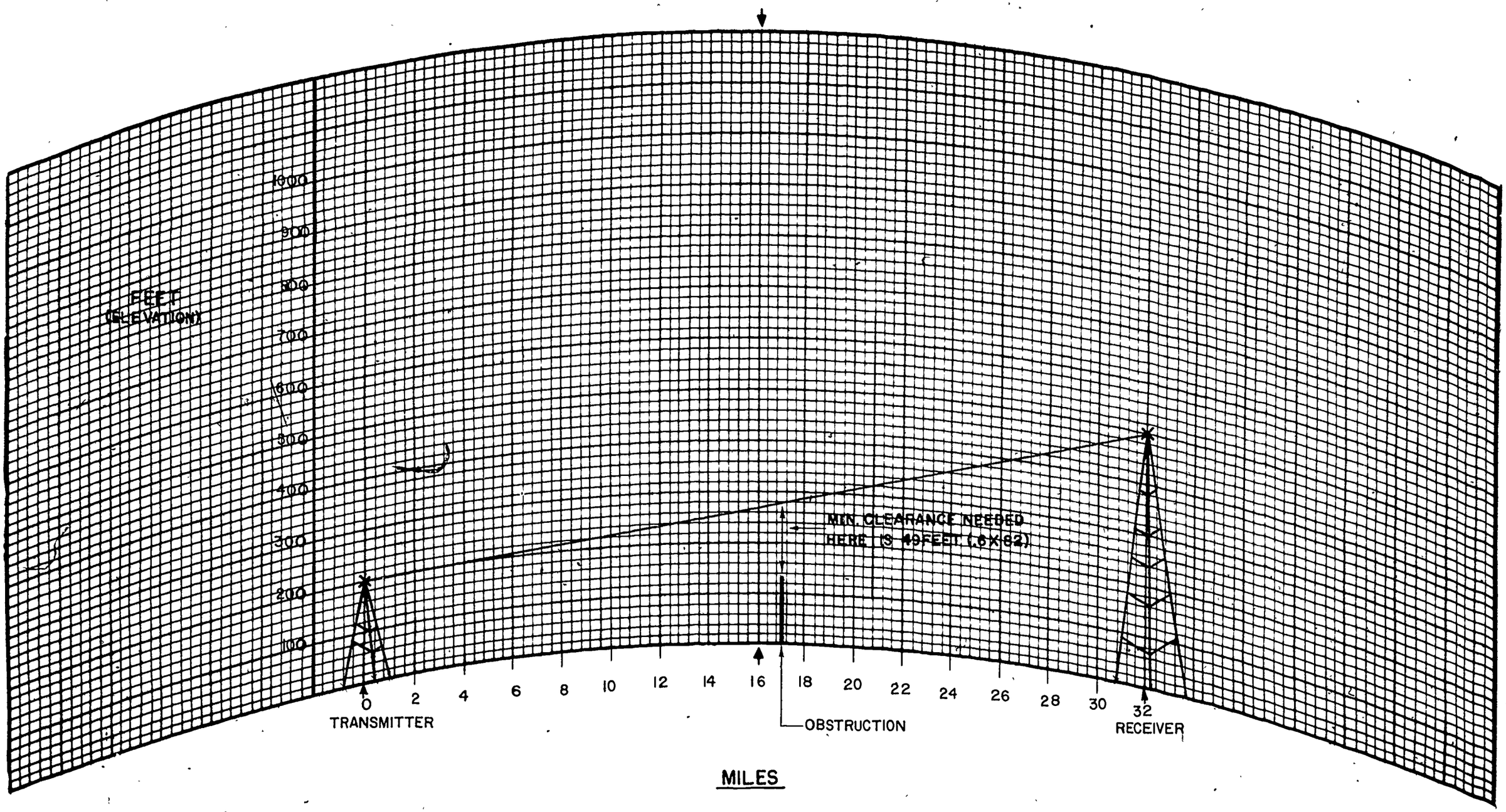

Answers to Test

1. transmit or receive two or more signals on one carrier wave
2. adding additional units
3. 4 kHz
4. 10
5. 4 to 432 kHz
6. 4 to 44 kHz
7. crystal filters
8. upper
9. wire
10. 3 Hz

MICROWAVE

Answers to Study Questions

1. Television relay, telephone messages, telemetry, space communications, etc.

2. A. L = 1.12 to 2.7 GHz
   B. S = 2.6 to 3.95 GHz
   C. J = 5.85 to 8.2 GHz
   D. X = 8.2 to 12.4 GHz, P = 12.4 to 18.0 GHz

3. Stand away from open waveguides, be sure all shields are in place, don't touch active circuits, etc.

4. Waveguides and low loss coaxial cable.

Answers to Study Questions

1. A. Oscillator--generates the carrier signal
   B. Modulator--impresses the data upon the carrier
   C. Power supply--provides necessary voltages and currents
   D. Transmission line--provides a signal path from the transmitter to the antenna or from the antenna to the receiver
   E. Receiver--amplifies and demodulates the incoming signal
   F. AFC system--insures operation on the proper frequency
   G. Control system--provides failure alarm, switching, routing, etc.

2. As applied to microwave, an antenna in the shape of a dish that radiates energy in a parallel beam when the feed point is placed at the focal point of the dish.

3. The process for amplifying some frequency components of a signal to help these components override noise or to reduce distortion.

4. Figure 1, this R.S.A.

Answers to Study Questions

1. A. Klystron--a vacuum tube containing a grid, a cathode, and an adjustable cavity. A repeller plate is used to cause oscillation by "bunching" electrons.
   B. Traveling Wave Tube--contains an electron focusing gun, a helical coil to the anode (internal) and two external helixes for input and output coupling. "Bunching" of the electrons due to the action of the helixes causes oscillation.
   C. Backwave oscillator--basically a traveling wave tube but uses a bifilar helix and has a balanced output.
   D. Magnetron--a tube that contains several cavities and a very strong magnet. If a very high dc potential is applied to the elements, it causes electrons in the central cavity to travel in an eliptical pattern which produces oscillations in the outer cavities as they pass the outer cavities.
   E. Gun diode
   F. Tunnel diode --operates on the negative resistance principle.

2. A micrometer (or calibrated dial) is attached to a cavity and as the dial is turned, the size of the cavity is varied. An indicating device (meter and crystal diode) indicate when the cavity is resonant at the frequency to be measured. The dial reading is then converted to frequency if it is not already a direct reading instrument.

3. A cavity contains all the necessary characteristics to be a resonant "tank" circuit. It consists of an infinite number of quarter wave shorted stubs arranged in a complete circle with the short at the outer edge. When excited with RF energy, it has the same "flywheel" effect as a parallel resonant "tank."

4. High Z at the open end, low Z at the shorted end.

Answers to Study Questions

1. The data to be impressed on the carrier is used to vary the repeller voltage.

2. Bias voltage

3. Up to around 40 MHz

4. FM, double sideband AM, PM, etc.

Answers to Study Questions

1. Round, square, rectangular and elliptical

2. A. Low I^2R loss
   B. Low insulation loss
   C. Very rugged
   D. Simple construction
   E. Minimal radiation loss
   F. Good power-handling capability

3. A. Physical size is limited
   B. Unable to carry signals less than the design value (i.e. cut off frequency)

4. Electromagnetic and electrostatic

5. The normal configuration of the electromagnetic field in a rectangular waveguide.

6. When the electric field is perpendicular to the length of the guide and no E lines are parallel to the direction of travel of the wave.

Answers to Study Questions

1. Two methods are A) a small probe inserted into the guide and B) a loop inserted into the guide.

2. The field is rotated (see Fig. 6)

3. A 45 degree bend spaced one-quarter wave from another 45 degree bend causes a direct reflection in one bend that is canceled by the inverse reflection leaving the fields as if no reflection had occured. In case of a single 90 degree bend, the fields remain in the same plane, and, if the bend is not too short, the reflections are minimal.

4. A specially designed joint using stubs to an advantage to keep the joint from leaking radio frequency energy.

5. A. Graphited sand in the end of a guide
   B. High resistance rod in the E field
   C. A wedge cutting the H lines

Answers to Study Questions

1. A detector whose rectified output current is proportional to the square of the effective value of the signal voltage.

2. Impedance must be matched, conversion loss, noise output

3. 1000 MHz and up

MICROWAVE

Answers to Study Questions

1. Horn and parabolic reflector
2. Angle of the flare of the sides and the length of the flared section
3. High power gain and narrow beam width
4. A grid used to bounce (or change direction) of a microwave signal (it is not excited directly by the transmitter).

Answers to Study Questions

1. See Smith Chart

2. See Smith Chart

3. A. Resistance
   B. Conductance
   C. Impedance
   D. Susceptance
   E. VSWR
   F. Admittance
   G. Reflection coefficient

4. See Smith Chart

5. .5 wavelengths

6. 180°

State Vocational-Technical Schools of Louisiana

MICROWAVE

R.S.A. 9

PAGE 2 OF 2

NAME	TITLE	DWG. NO
SMITH CHART FORM 82-BSPR(9-66)	KAY ELECTRIC COMPANY, PINE BROOK, N.J. © 1966 PRINTED IN U.S.A.	DATE

IMPEDANCE OR ADMITTANCE COORDINATES

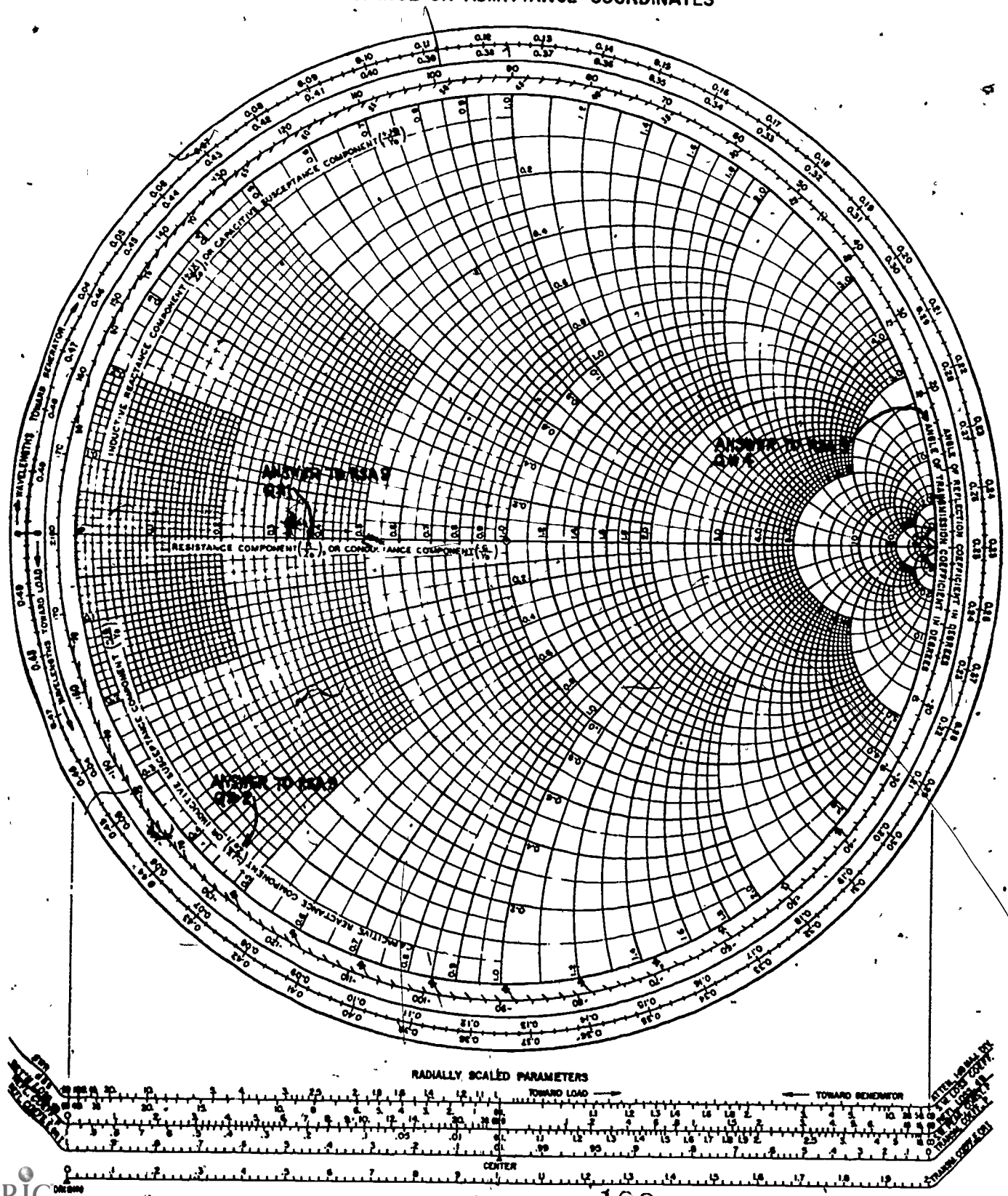

A MEGA-CHART

Answers to Study Questions

1. A. Balanced mixer
   B. To cancel any noise input from the local oscillator

2. Klystron tubes or solid state devices

3. Noise figure--ratio of total signal-to-noise power ratio at the input terminals to the total signal-to-noise power ratio at the output terminals after correcting for the bandwidth of the receiver.

4. Yes

Answers to Study Questions

1. A numbering system of the paths that a mircrowave signal may arrive at the receiving antenna.

2. .6 x radius of the circle of the first zone

3. Topographic map

4. Higher than 99%

5. A. Transmission line losses
   B. Free space loss
   C. Antenna gain
   D. Transmitter power output

6. A hypothetical antenna radiating or receiving equally well in all directions

7. A. Skin effect losses in waveguides
   B. Misalignment of antennas
   C. Accumulation of foreign matter on antennas
   D. Polarization errors