DOCUMENT RESUME

ED 219 228 SE 037 860

AUTHOR Gottlieb, Herbert H.
TITLE Physics Lab Experiments and Correlated Computer Aids. Teacher Edition.
REPORT NO ISBN-0-940850-01-X
PUB DATE 81
NOTE 224p.
AVAILABLE FROM Metrologic Publications, 143 Harding Ave., Bell Mawr, NJ 08031 $10.50 per copy, $6. in class sets.

EDRS PRICE MF01/PC09 Plus Postage.
DESCRIPTORS Computer Oriented Programs; High Schools; Laboratory Manuals; *Physics; *Science Activities; Science Education; *Science Experiments; *Secondary School Science; Teaching Guides

ABSTRACT

Forty-nine physics experiments are included in the teacher's edition of this laboratory manual. Suggestions are given in margins for preparing apparatus, organizing students, and anticipating difficulties likely to be encountered. Sample data, graphs, calculations, and sample answers to leading questions are also given for each experiment. It is suggested that data obtained be verified with microcomputers. Subjects of experiments include among others measuring with precision; vector addition of forces; torques; resolution of a force into components; forces caused by weights on an incline, timer calibration; recording motion with strobe photographs; straight-line motion at constant speed; constant acceleration using a water clock; acceleration of a spinning disc; acceleration using a linear air track; pendulum; acceleration of free fall; mass/weight; Newton's second law; trajectories; Newton's third law; conservation of energy in a pendulum; energy changes on a tilted air track; simple harmonic motion of a linear air tract; oscillating mass hanging from a spring; mechanical resonance; Boyle's law; calibrating a mercury thermometer; linear expansion of a solid; calorimetry; change of state; waves on a coiled spring and in a ripple tank; reflection/refraction; diffraction/interface; images and converging/diverging lenses; standing waves; electric fields and electron charge; Ohm's Law; series/parallel circuits; magnetic fields; electron beam deflection; and half-life. (JN)

PHYSICS
LAB EXPERIMENTS AND CORRELATED COMPUTER AIDS

Teacher Edition

HERBERT H. GOTTLIER

TO THE TEACHER

This teacher edition contains all of the information found in the student edition and also includes some additional teacher aids printed in the contrasting italic type that you are now reading Suggestions are given in the margins for preparing apparatus, organizing students, and anticipating difficulties that are likely to be encountered. Also, for each experiment, sample data, graphs, calculations, and sample answers to leading questions are given. These answers were obtained from the author's students over the past few years and some may lack rigor and conciseness. However, they are honest and can give you an idea of the kind of acceptable answers that can be expected from a typical student.

Most of the apparatus needed for these experiments is simple, inexpensive, and the kind that most schools already have. A few call for more expensive apparatus such as lasers, air tracks, microwave sets and nuclear detectors which may not always be available in class quantities. For these, consider having the students work in small groups with each of the available set-ups and then rotating to another when finished. You might also consider the possibility of doing some of the experiments as optional labs for the highly motivated students or as class projects in which a few students operate the apparatus while the rest record the data and perform the calculations individually.

Most of the materials in this book are updated versions of basic time tested physics experiments that have been proven by several generations of physics students. Others are rather new and novel and were adapted from ideas gleaned from physics journals and from projects funded by the National Science Foundation.

Because there are so many excellent textbooks currently available for introductory physics courses, this laboratory manual is not tied to any particular textbook and almost any of the popular texts will provide the necessary theory and background.

Notice several features in the student edition that make the life of the instructor a bit easier The pages have been perforated for easy removal and have been punched for reassembly in a standard loose leaf binder. The wide margins provide space where students can record any supplementary suggestions for modifying the procedures or improving the techniques of experimentation. Perhaps the feature that provides the greatest help for instructors is the availability of specially written microcomputer programs to accompany this book. They guide students in obtaining data during the laboratory session, methodically check each entry and calculation in the final report, and even assign a grade for this portion of the lab work. Suggestions for utilizing these computer programs are given on the inside back cover of this teacher manual.

PHYSICS
LAB EXPERIMENTS
AND
CORRELATED
COMPUTER AIDS

HERBERT H. GOTTLIEB

TEACHER EDITION

MP
METROLOGIC PUBLICATIONS
143 Harding Avenue
Bellmawr, New Jersey 08031

THE AUTHOR

Herbert H. Gottlieb, currently teaching at the Physics Department of Queensborough Community College, has been chairman of the Physical Science Department of Martin Van Buren High School and on the faculty of the Belfer Graduate School of Science of the Yeshiva University in New York City.

He edits the monthly section "Apparatus for Teaching Physics" of the Physics Teacher magazine and is an active member of the American Association of Physics Teachers (AAPT) and the National Association of Science Teachers (NSTA). He has won over 30 local and national awards for work with students as well as for his professional work. In 1971, he was awarded the Distinguished Service Citation of the AAPT.

All of the experiments in this book have been adapted from similar or identical experiments in the book "Laboratory Manual for the World of Physics" 1973 by the same author, Herbert H. Gottlieb. However, significant revisions have been made in almost all of the experiments to clarify student understandings and to make the experiments adaptable for computer verification and evaluation.

The Addison Wesley Publishing Company Inc. is thanked for their permission to reproduce large sections of instructions and most of the illustrations.

(STUDENT EDITION) ISBN 0-940850-00-1
(TEACHER EDITION) ISBN 0-940850-01-X

TABLE OF CONTENTS

TABLE OF CONTENTS
(continued)

INTRODUCTION

The laboratory experiments in Physics are a great source of fun as well as a valuable learning experience that will be remembered for the rest of your life. Current research tells us that skills learned in the Physics lab are very different from those found in other courses.

Although textbook theory will usually explain everything, this is not always the case. Often, blunders and faulty calculations in the laboratory lead to unexpected results that seem to contradict the established theory. However, there is always that chance that you have discovered something new: something that others have never been able to observe and explain before. True, it does not happen often, but be assured that it does happen often enough to make things really interesting.

Unlike many other laboratory manuals, no special studying or preparation is needed before you start a new experiment. Each one starts with a very brief introduction and any necessary explanations or theory are given as needed, either by the laboratory instructions or by the correlated computer programs that accompany this book.

In short, a great deal of help is now available from computer programs as well as textbooks and your instructor. The rest is up to you.

VERIFYING DATA WITH A MICROCOMPUTER

After running the first trial, it will be helpful to make the necessary calculations with a hand calculator and then have an Apple, PET or TRS80 microcomputer verify the data before proceeding with your experiment.

With the appropriate disc or cassette program loaded into the microcomputer, enter the data for the desired experiment in response to the prompts on the computer screen. The computer will let you know if the data is reasonable and if the precision of your measurements is adequate for the particular experiment. Whether or not the data have the desired degree of precision, the computer will accept the data offered and then let you know if all of the computations are correct.

At this point, return to your apparatus, make any necessary corrections in your procedures and techniques, and perform additional trials carefully recording the data for each trial. Wide margins have been provided in this book for your notes, special observations, and additional data.

ANALYZING DATA

Space is given in each experiment for entering the results of calculations, analyzing the data, and recording conclusions. When you are required to draw a graph or a scale drawing for an experiment, carefully tear out a sheet of graph paper from the back of this book and include the graph with the lab report that you submit to the instructor. If the work is planned in advance and if the graph paper is used sparingly, there should be a sufficient quantity of graph paper for the entire course. Instructions for making graphs are given in Appendix 2.

DOING AN EXPERIMENT

CHECKING APPARATUS

When you receive your apparatus at the beginning of the laboratory session, report any obvious damages, and missing or broken parts so you will not be held responsible. Resist the temptation to play with the apparatus before you are told to start because parts are easily broken and, in many instances, the apparatus has been carefully prealigned by your instructor and may be difficult for you to reset.

You might find that the apparatus that you are given is a bit different from some of those illustrated in this book. Just as there are many types of hand calculators which differ slightly in appearance and in operation, there are similar differences among types of physics apparatus made by different manufacturers. However, all are very much alike in principle and it does not take long to learn how to use a particular model.

RECORDING DATA

It is always necessary to perform more than one trial for each experiment to ensure that the apparatus is performing correctly and the observations are repeatable. However, you must be the judge of how many trials are necessary for a particular experiment to justify your conclusions Sometimes only two or three trials are needed. At other times, the data may change so much from trial to trial that even five trials may be insufficient to prove anything. If more room is needed for your data, use the wide margins or extra sheets of paper and rule space for any additional columns that you think are necessary.

In recording data for these experiments, it will usually suffice to measure to the nearest tenth of a gram, or the nearest tenth of a volt. As a rule, the precision of the original measurements determines precision of the conclusions. It would be unreasonable to conclude that the speed of sound in the lab is 346.59 meters per second if distances are only measured to the nearest meter and the time is only measured to the nearest second. To justify the .59 you would have to measure distance to the nearest hundredth of a meter and the time to the nearest hundredth of a second.

Above all, be honest in recording data. When working with a group, there is nothing wrong in recording data obtained by your lab partners as well as your own data. But be sure to indicate this fact on your data sheets.

EVALUATING LAB REPORTS

Near the end of the lab session when all of your data is recorded and the evaluation program for the experiment has been loaded into the microcomputer, enter your name and other data into the microcomputer in response to its prompts. In return, after all of the entries have been made, the computer will give you a printout of your data together with a suggested grade for your laboratory work. The grade is based on the precision of each data entry and the accuracy of your calculations. Submit your completed lab report and computer printout to your instructor.

EXPERIMENT • MEASURING WITH PRECISION

NAME _____ CLASS HOUR _____

LAB PARTNERS _____ DATE _____

PURPOSE

When recording quantitative measurements and arriving at conclusions, it is important to indicate the precision that was achieved by the experimenter. The precision can vary greatly with the care that you take, your experimental techniques, and the apparatus that is used. In this experiment, apparatus with differing precision will be used and the data will be recorded using an appropriate number of significant figures.

This exercise is most successful when students are organized to work in groups of three or four It is important that each student make his own measurements independently to minimize the tendency to be influenced by the results of his lab partners If there is disagreement in the data when all the measurements have been completed, the members of the group might review the measurement techniques before trials are repeated

PROCEDURE

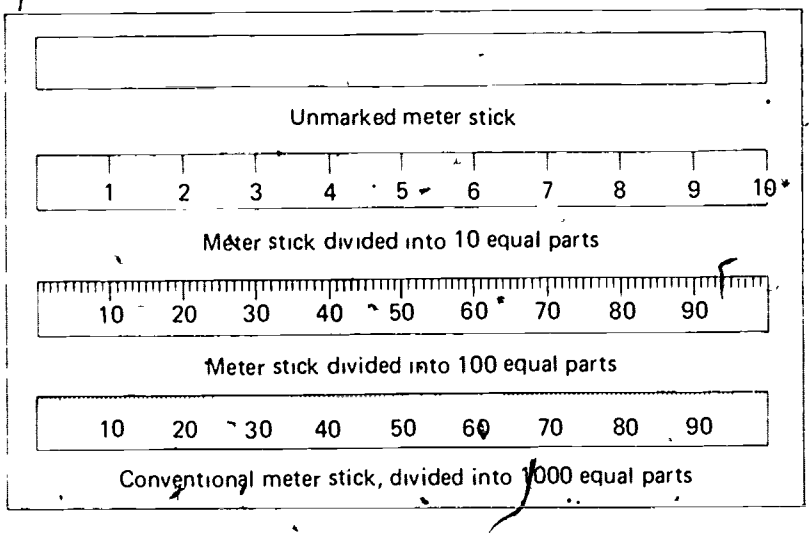

APPARATUS PREPARATION

A set of four specially marked meter sticks is necessary for each group If these are not available from scientific supply sources, ordinary meter sticks can be adapted by wrapping them with paper on which scale divisions are carefully marked.

A meter stick with a square cross-section and with a different scale on each face is available from Sargent-Welch Scientific Co

1 Using an unmarked meter stick, measure the length of a long lab table or other object that is more than 2 meters long. Record the length in whole meters and any remainder to the nearest tenth of a meter (to the best of your estimation). For example, if you were to record the length as 4.9 meters the measurement would have two significant figures and mean that the 4 is certain and the .9 is estimated. Enter your measurement in column A of the data chart.

2. Measure the same length using a meter stick divided into 10 equal parts. You can now determine the length of the table to the nearest tenth of a meter without having to estimate. To obtain greater precision, however, measure to the nearest division and then estimate the nearest tenth of a division. This gives the length as a three-digit number with two decimal places. The first two digits are certain and the last was estimated Repeat this measurement several times and record your results in the column B of the data chart.

3. Repeat the above procedure using a meter stick divided into 100 equal parts. Record the length of the table as a four-digit number

SUGGESTIONS AND TECHNIQUES

1. When high precision is required, it is usually not advisable to start measurements from the end of the meter stick. In the process of mass production, it is difficult for manufacturers to cut the meter stick with precision. Also, older sticks may have worn ends. A check of several meter sticks will show that some are longer than others.

2. If you hold a meter stick on edge when measuring, so that the bottoms of the markings actually touch the item being measured, you are more likely to get the same measurements in successive trials.

with three decimal places. The first three digits are certain, and the last is estimated. Enter the data in column C of the data chart. Note that it is more difficult now to obtain the same results during several independent trials, because greater precision has been achieved.

4. Using a conventional meter stick, with 1000 divisions, measure the length of the table several times. Estimate to the nearest tenth of a division to obtain measurements with five digits (four decimal places). Enter the data in column D of the data chart.

DATA

Length of table or other long object (in meters)

	Stick used	A Unmarked	B 10 divisions	C 100 divisions	D 1000 divisions
Brian	Trial 1	4.9	4.87	4.877	4.8835
	2			4.882	4.8878
Steve J.	3	4.9	4.88	4.800	4.8872
	4			4.887	4.8882
Steve S.	5	4.9	4.88	4.886	4.8892
	6			4.887	4.8879

(Answers are based on sample data.)

RELATED QUESTIONS AND ACTIVITIES

1. It is expected that your data in column D will vary from trial to trial because of the difficulty in getting the same four digits that are certain with only one uncertain digit each time. Using the data in column D, record the length of the object using only digits of which you are certain:

4.88 meters.

EXPERIMENT 1. MEASURING WITH PRECISION

NAME CLASS HOUR

2. Now record the length of the object using the conventional number of significant figures. That is, record all of the certain digits and only the first of the estimated digits. If the first estimated digit differs from trial to trial, average them. (For example, if your measurements were 4.8835 and 4.8878 meters, you would record the certain digits, 4.88, and then average the uncertain 3 and uncertain 7 so your final measurement would be 4.885 meters.)

4.887 meters.

3. Why is it better to take several independent trials of each measurement rather than rely on one trial?

Having more than one trial minimizes human and random errors.

4. Suggest an improved technique that would allow you to determine the length of the table to one more certain digit.

Use a magnifying glass to read ruler. Average at least 10 trials.

5. Why it is more difficult to obtain repeatable results when greater precision is attempted?

Small errors do not show up when measurements are crude.

6. The purpose for using data determines how much precision is needed in measuring. Give an example of a practical situation where a high precision (many certain digits) is needed.

Great precision is needed in space ship navigation.

7. Give an example of a practical situation where measurements having many significant figures are unnecessary and indicate wasteful experimental techniques.

Measuring the thickness of a textbook to the nearest ten thousandth of a millimeter has no practical purpose.

EXPERIMENT 2 VECTOR ADDITION OF FORCES

NAME. CLASS HOUR

LAB PARTNERS DATE

PURPOSE

When forces are added, both the magnitude and the direction of the forces must be taken into account. This experiment is designed to reinforce the concepts involved in vector addition by the graphic method. If necessary, refer to your textbook for additional information.

Students should work in groups of three or four, because the actual time spent on adjusting the apparatus and taking data is negligible compared with the time that is required for analysis of results. Each student in a group might be required to construct a diagram with a different force-distance scale

PROCEDURE

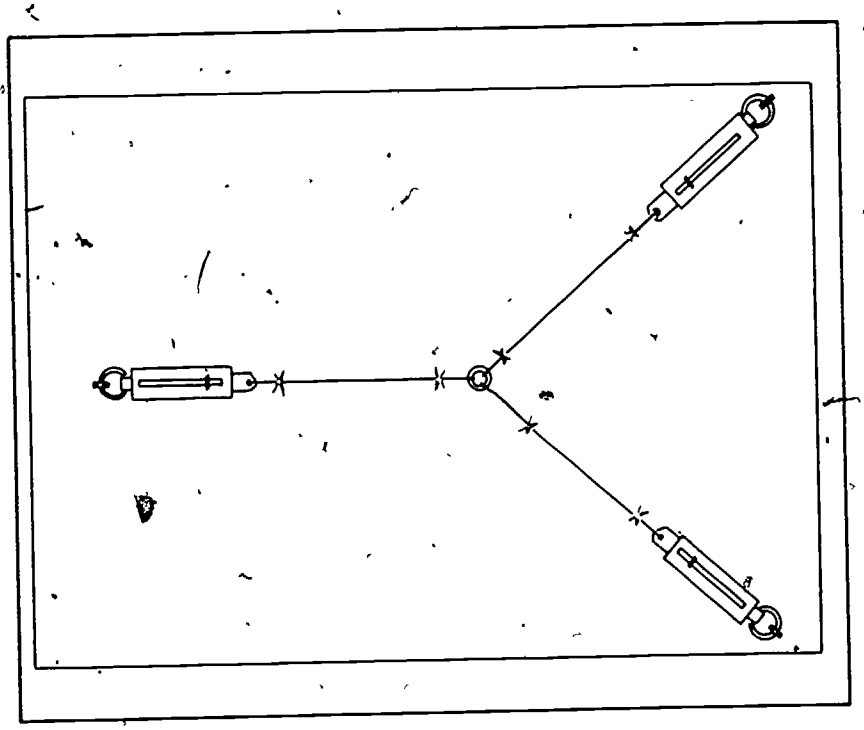

APPARATUS PREPARATION

If pegboards are used, pencils or standard wood golf tees can be inserted in the holes to mount the top of each spring scale. For each group of students:

- *1 commercial force board or 1 pegboard (about 2 ft. x 2 ft.)*
- *3 spring scales (preferably same manufacturer and same range)*
- *1 ring or washer for central tie point*
- *string*
- *1 piece of carboard or small notebook to support sheet of graph paper beneath strings*

Spring scales marked in newtons are preferable to spring scales marked in grams. However, if only gram scales are available, students can convert their readings to newtons using the approximation that each 10-g interval marked on the spring scale stands for 0.1 N of force.

1. Use a commercial force board or set up three scales on a horizontal peg board as shown in the photo.

2. Adjust the apparatus so that each of the three strings is between 10 and 20 centimeters long and the indicators on the three scales have different readings but all are near the centers of their ranges.

3. With the board flat on a table, grab the ring at the intersection of the strings, lift it up, and let it snap back once or twice to overcome friction in the scales and to adjust the tension for equilibrium.

4. Slip a piece of graph paper beneath the three strings so that the ring is above the center of the paper and one of the strings lies directly above one of the grid lines on the graph paper. With a sharp pencil,

SUGGESTIONS AND TECHNIQUES

1. Before setting up the apparatus, it is a good idea to check the zero reading of each scale in the horizontal position and compensate accordingly.

2. When selecting a force-distance scale for drawing vectors, use a scale that will result in the longest vectors that can fit in the space available.

make a dot on the paper to show the position of the center of the ring, and make additional dots along each of the strings. A piece of cardboard or a thin notebook may be placed beneath the paper to support it while you are making dots.

5. On the data chart record the scale readings F1, F2, and F3, in newtons, for each of the three scales. If the scales are calibrated in grams, multiply the scale readings by .01 to get the approximate weight in newtons. (Thus a reading of 32 grams would be recorded as .32 newton.)

6. Remove the paper from the apparatus and with the aid of a straight edge and a sharp pencil connect the dots with three straight lines radiating out from the center dot. These lines represent the directions of the forces exerted by the spring scales. Extend each of these lines to the edge of your paper. Then measure the angle between the lines for scales S1 and S2 and record this angle (A), in the data chart.

7. Using a convenient scale (such as 1 cm of length represents 0.2 newton of force), start at the central dot and measure out a distance along the force line that corresponds to the reading of spring scale No. 1. (If the scale read .32 N, and 1 cm length is used to represent .2 N, the measured distance should be .32/.2N/cm = 1.6 cm). Place an arrowhead at the end of this distance and darken the line between the arrowhead and central dot. You now have a force vector that represents scale reading F1. Repeat this procedure to construct a second force vector for scale reading F2.

8. Construct the resultant of the two vectors you have just drawn.

9. Measure the length of the resultant and convert this value to a force value using the force-distance scale that was previously selected. Enter this resultant force F(R) in the data table.

10. Now draw the force vector for the third force line. Compare it with the resultant of the first two force vectors. Since the net force on the ring is zero when it is in equilibrium, the resultant should be equal in magnitude (value in newtons) and opposite in direction to the third force vector.

11. Using the same paper and the same force-distance scale, find the resultant of the third force vector and one of the first two force vectors. Compare the resultant to the remaining force vector in each case.

EXPERIMENT 2. VECTOR ADDITION OF FORCES

NAME: CLASS HOUR:

DATA TABLE

Graphic Force-Distance Scale

1 centimeter = 0.2 newton

		Trial 1	Trial 2	Trial 3	Trial 4
1	Scale F1 (N)	1.40			
2	Scale F2 (N)	0.80			
3	Angle A	101°			
4	Resultant F (R) (N)	1.47			
5	Scale F3 (N)	1.39			
6	Percent Error	5.8%			

RELATED QUESTIONS AND SUGGESTED ACTIVITIES

1. When three forces are in equilibrium the resultant of any two forces should be equal in magnitude to the third force and opposite in direction. If you did not find this to be true, calculate your percentage error. This is done by subtracting the magnitudes of the resultant force and the third force, dividing the difference by the magnitude of the third force, and then multiplying the product by 100%.

Show a sample calculation here and enter the percent error in the data chart.

$$\frac{1.47N - 1.39N}{1.39N} \times 100\% = 5.8 \text{ \% error}$$

2. Predict what would happen to the reading on the third scale if the first two scales were to be moved closer together and the strings adjusted so they would indicate the same forces as before.

The reading of the third scale should increase.

3. Experiment, by actually moving two of the scales closer together and adjusting the strings so they indicate the same forces as before. Observe the reading of the third scale and comment on the accuracy of your prediction in the question 2 above.

My prediction was correct.

4. If each of the three scales is applying a force in a different direction, why is it impossible for the angle between any two of the forces to be 180°?

The resultant of two forces at 180° is zero. Thus, the addition of a third force is impossible.

5. Suggest an improvement in the apparatus or a technique which would permit more precise measurements and reduce the percentage error.

The scales are calibrated to hang vertically. Since they are used horizontally here, they should be recalibrated.

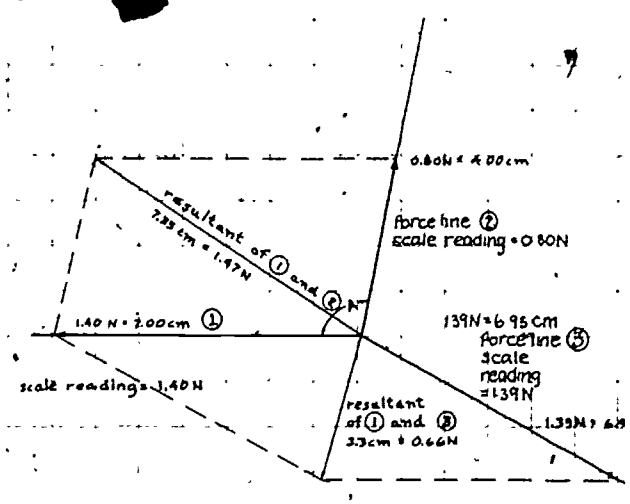

EXPERIMENT • TORQUES

3

NAME CLASS HOUR

LAB PARTNERS: DATE

PURPOSE

Torque measures the tendency of a force to rotate an object about an axis. The principles of applying and balancing torques are explored in this investigation.

A. BALANCING TORQUES ON A METER STICK

PROCEDURE

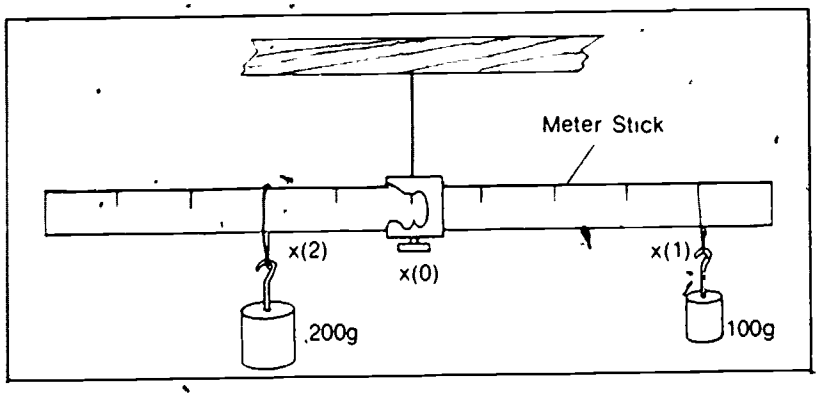

1. Suspend a meter stick from an overhead support as shown in the diagram. Slide the meter stick along the clamp until you find a position for the clamp at which the meter stick balances horizontally. Record the position of this point of suspension X(0) in the data chart.

2. Exactly 10.0 cm to the right of the point of suspension, hang a 100-g standard mass. The weight of the standard mass exerts a force on the meter stick that causes it to rotate around the point of suspension. Observe whether the torque produced by this force is clockwise or counterclockwise. Record the position X(1) and weight F(1) of the standard mass in the data chart, using the approximation that a mass of 100 g weighs 1.00 newton.

3. Hang a 200-g standard mass on the left side of the meter stick and adjust its position until the meter stick is balanced horizontally. Record this position X(2) and the weight F(2) of the standard mass (2.00 newtons). Also note whether the weight of the mass creates a clockwise or counterclockwise torque around the point of suspension.

4. For trial 2, hang the 100-g mass 20.0 cm to the right of the point of suspension and balance the stick by finding the appropriate position for the 200-g mass on the other side. Record the position and weight of each mass.

Students working in pairs should be able to complete most of this experiment in the time that is normally allotted to the lab period. Because the equipment is comparatively inexpensive and rugged, students might be allowed to borrow some of the school's equipment and finish the experiment at home if necessary.

APPARATUS PREPARATION

For each group of students:
- *1 meter stick*
- *1 100-g standard mass*
- *1 200-g standard mass*
- *1 meter stick clamp*
- *string to suspend meter stick and masses*
- *overhead support such as tripod or ringstand to suspend apparatus*

For the entire class:
- *several objects of unknown weight, such as rocks (0.2 N to 10 N each)*
- *triple beam balance or spring scale*

Remind students that 100g equals 0.1 kg and weighs .98 newtons.

If this experiment is scheduled near the start of the course, it will also help to review the conversions from centimeters to meters. For example 49.9 cm = .499 m.

SUGGESTIONS AND TECHNIQUES

1. It is important that the meter stick not slip along whatever is supporting it. Although a commercial meter stick clamp is preferable, a cord with a tight slip knot may be satisfactory.

2. The position of the meter stick clamp is measured by the position of the pointer in the center of the clamp.

3. Suspend the known and unknown masses from the meter stick using strong thread or lightweight cord. The weight of the cord can be neglected in calculations. Commercial weight hangers might be available at your school but they are not recommended for this experiment because their weights are not negligible and must be added to those of the hanging masses in all calculations.

4. When the meter stick is balanced horizontally, the cords that hold the hanging masses will always be perpendicular to the meter stick, since the weight of the masses pulls them straight down.

5. Repeat the above procedure, using a variety of positions for the 100-g mass and finding the corresponding position of the 200-g mass that will balance the meter stick horizontally.

6. Substitute different known masses on each side of the point of suspension. Repeat the above procedures.

DATA AND ANALYSIS

Location of point of suspension X(0) = .499 meter

TABLE I

		TRIAL 1	2	3	4	5	6
Mass (grams)	M(1)	100	100	100	100		
Position of mass	X(1)	.599	.699	.799	.899		
Distance from point of suspension, meter	S(1)	.100	.200	.300	.400		
Force, newtons	F(1)	1.00	1.00	1.00	1.00		
Torque, N—m	G(1)	.100	.200	.300	.400		
Mass (grams)	M(2)	200	200	200	200		
Position of mass	X(2)	.448	.396	.349	.302		
Distance from point of suspension; meter	S(2)	.051	.103	.150	.197		
Force; newtons	F(2)	2.00	2.00	2.00	2.00		
Torque, N—m	G(2)	.102	.206	.300	.394		
Percent error	E	.2%	.3%	0%	1.5%		

EXPERIMENT 3. TORQUES

NAME: CLASS HOUR:

1. The torque around the point of suspension, in newton-meters, equals the force creating the torque, in newtons, times the distance of the force from the point of suspension, in meters. Calculate the torque exerted by each force and enter in the data chart.

2. When the meter stick is motionless, the torques are balanced and the counterclockwise torque should be exactly equal to the clockwise torque. If there is a small difference due to experimental error, calculate the percent error by dividing the difference by the clockwise torque and multiplying the result by 100%.

B. WEIGHING AN UNKNOWN

PROCEDURE

1. After making sure the meter stick is balanced horizontally when nothing is hung from it, hang a known mass on one side of the meter stick and an object of unknown mass on the other side. Adjust the position of the unknown until the meter stick is again balanced horizontally. Determine and record the weight of the known mass and record the positions of the two objects.

2. Move the known mass to several new positions. At each new position, move the unknown until the stick is rebalanced and record the positions of the known and the unknown.

DATA AND ANALYSIS

Location of point of suspension X(0) = 49.8 cm

Known mass m(k) = 100 g

TABLE II.

			TRIAL 1	2	3	4	5	6
Known Torque	Position of mass (m)	X(k)	.598	.698	.798	.898		
	Distance from point of suspension (m)	S(k)	10.0	20.0	30.0	40.0		
	Force (N)	F(k)	1.00	1.00	1.00	1.00		
	Torque (N-m)	G(k)	.100	.200	.300	.400		
Unknown Torque	Position of unknown (m)	X(u)	.423	.346	.268	.196		
	Distance from point of suspension (m)	S(u)	.075	.152	.230	.302		
	Torque (N-m)	G(u)	.100	.200	.300	.400		
Calculated weight (N)		W(u)	1.33	1.32	1.30	1.32		
Measured weight (N)		W	1.32	1.32	1.32	1.32		
Percent error		E	.8%	0	1.6	0		

1. Using the fact that the clockwise and counterclockwise torques are equal when the meter stick is balanced, calculate the weight of the unknown and enter in the data chart.

2. Use a spring scale or commercial balance to find the weight of the unknown. (If you measure the mass of the unknown in grams, you can find the weight by using the approximation that each 100 g of mass weighs 1.00 N.) Compare the measured weight with the weight you calculated from the torques and find your percent error.

RELATED QUESTIONS AND ACTIVITIES

1. Suspend the meter stick way off center so that the clockwise torque is much greater than the counterclockwise torque. Hold the meter stick in the horizontal position and then let go. Describe what happens and what final position the meter stick takes.

Meter stick rotates clockwise. When it comes to rest, it is almost, but not exactly vertical.

2. Using the principles of torques that were learned in this experiment, make a scale of your own and calibrate it to read weights directly instead of distances.

3. Try a more complicated experiment by hanging several masses on each side of a suspended meter stick, one of them an unknown. Using the principle that the sum of the clockwise torques and the sum of the counterclockwise torques must be equal when the stick is balanced, calculate the weight of the unknown mass. Check the weight by using a spring scale or a commercial balance.

EXPERIMENT 4 RESOLUTION OF A FORCE INTO COMPONENTS

NAME _____ CLASS HOUR _____

LAB PARTNERS _____ DATE _____

PURPOSE

Just as two forces acting together may be treated as a single force, called their resultant, a single force may be resolved into two or more forces acting in different directions, called components of the original force. The most useful application of this resolving technique is in taking a force which is acting at an angle to the surface of the earth and resolving it into its vertical and horizontal components.

It is recommended that this experiment be done with the students working in pairs

Many teachers will want to do one of the procedures as a class demonstration either before or after the laboratory exercise.

PROCEDURE

APPARATUS PREPARATION

2 spring scales, range 0 to 20 N (or 2000 g)
1 known weight, 10.0 N (Tape 2 nickels to a 1-kg standard mass to give it a weight of 10.0 N.)
3 lengths of string, about 20 to 30 cm each
overhead support to hang scales as shown in drawing

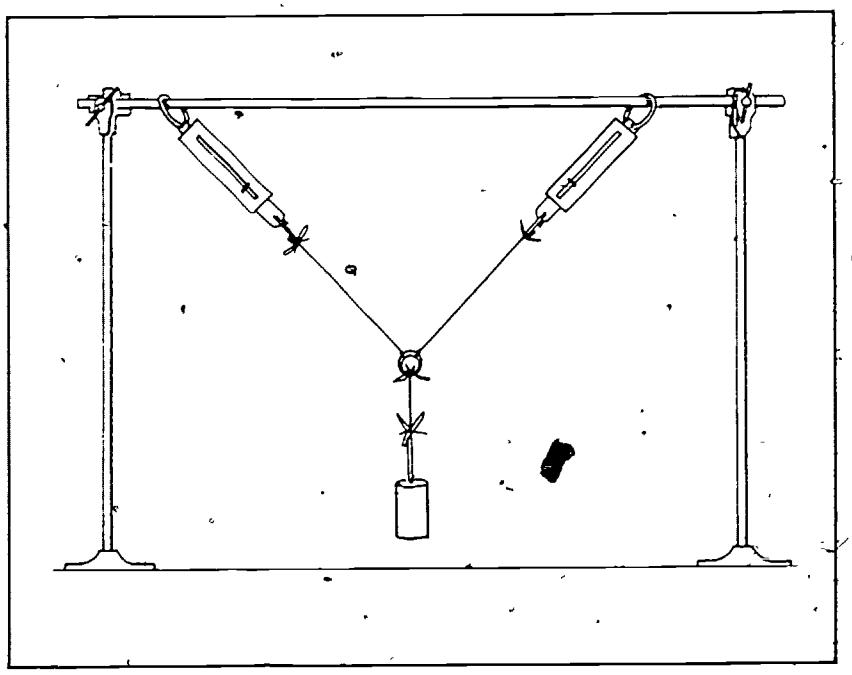

1. Attach two spring scales to an overhead support and hang a known weight between them as shown in the diagram. Place a piece of graph paper behind the paper so the ring is at the center of the paper and the vertical string holding the known weight coincides with one of the vertical grid lines on the graph paper.

2. Using a sharp pencil, carefully mark the position of the center of the ring on the graph paper and then trace the angles formed by the three strings radiating out from the center.

3. Remove the graph paper from the apparatus. Record the reading of the left scale (F1) and the right scale (F2) on the data chart and also on the appropriate pencil lines that you drew on the graph paper.

4. With a protractor, measure the angles formed between the force lines and the horizontal grid lines of the paper. Record the value of these angles, A1 and A2, in the data chart.

5. Choose a convenient force-distance scale and construct a vector of appropriate length for each of the two forces supplied by the spring scales.

6. From the top of each vector arrowhead, draw a vertical line downward until it reaches the level of the vector origin. The lengths of these lines correspond to the vertical components of the respective forces. Measure the length of the vertical line F1(v) and using the same force-distance scale (step 5 above) calculate the corresponding force and record the value in the data chart. Do the same for force F2(v).

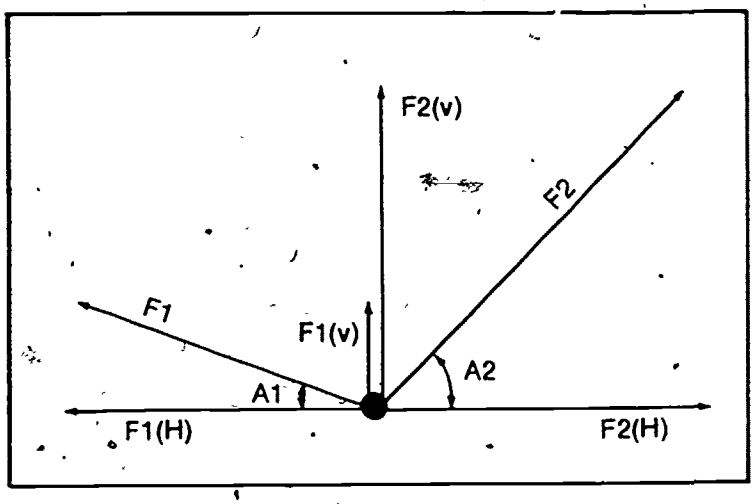

7. The horizontal components of the two original spring scale forces are represented by the distances between the origin and the bottoms of the vertical arrows. (See the diagram at the left). Measure the lengths of these two lines and using the original force-distance scale, calculate the value of the horizontal component forces F1(H) and F2(H) and enter them in the data chart.

SUGGESTIONS AND TECHNIQUES

1. When making vector diagrams, it is essential that a sharp pencil be used with a straight edge to draw all vectors and construction lines. The use of ballpoint pens is not recommended.

2. Always tap the apparatus and scales before making readings to be sure that the scale indicators are not stuck. Once the apparatus has been properly adjusted, however, be especially careful not to disturb the equipment until all calculations have been made. In case of error, it is a good idea to recheck the original data readings.

EXPERIMENT 4. RESOLUTION OF A FORCE INTO COMPONENTS

NAME CLASS HOUR:

DATA AND ANALYSIS

(All forces are in newtons)

Force exerted by left scale (F1)	4.3			
Angle A1	54			
Horizontal component (F1H)	2.5			
Vertical component (F1V)	3.4			
Force exerted by right scale (F2)	7.3			
Angle A2	79°			
Horizontal component (F2H)	2.6			
Vertical component (F2V)	6.8			
Difference between horizontal components (F1H)-(F2H)	0.1			
Percent error of horizontal components	4%			
Sum of vertical components (F1V) + (F2V)	10.2			
Weight of hanging mass (m)	10.0			
Difference between upward and downward forces (F1V) + (F2V) -mg =	0.2			
Percent error of vertical components	2%			

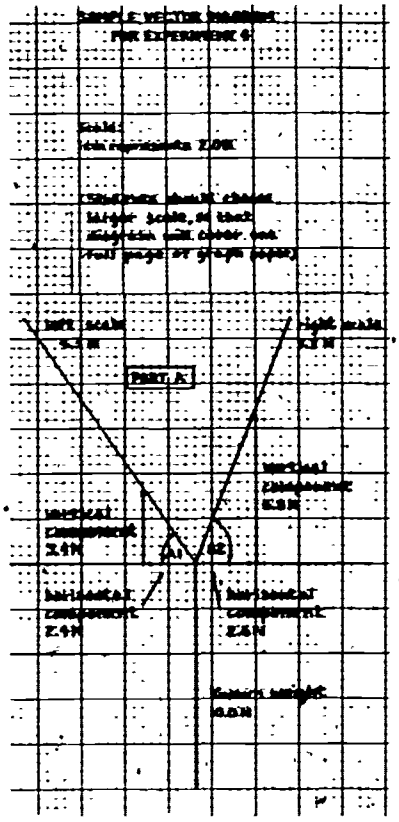

1. Using your force-distance scale, determine the magnitudes of the horizontal and vertical components of the forces exerted by the scales. Record the magnitudes in the data chart. You may record your partners' values for the components in the remaining columns.

2. If the apparatus is stationary and a condition of equilibrium exists, the horizontal force pulling to the left should be exactly equal to the horizontal force pulling to the right. The two are probably not equal because of experimental inaccuracies. Calculate the percent error by dividing the difference by the smaller of the two horizontal forces, and enter this value on the data chart.

3. Since the apparatus was in equilibrium, all upward and downward forces must be equal. That is, the sum of the vertical components of the forces exerted by the two scales must be equal in magnitude to the downward known weight. If they are not equal, calculate the percentage error.

EXPERIMENT 5 • FORCES CAUSED BY WEIGHTS ON AN INCLINE

NAME _____ CLASS HOUR _____

LAB PARTNERS _____ DATE _____

PURPOSE

When a weight is on an incline, only a portion of the weight acts to force the object downhill. The relationship between the magnitude of the downhill component of the weight and the angle of incline will be established in this experiment.

If insufficient time is available for the class to complete all of the experiments, this one may be omitted because the principles are similar to those in experiment 4.

APPARATUS PREPARATION

1 dynamics cart. Insert an eye-screw in the top of the cart, near the center, directly above the point where the cart will balance on your fingertip.
2 lengths of string, about 30 cm each
2 spring scales, range 0 to 20 N (or 2000 g)

PROCEDURE

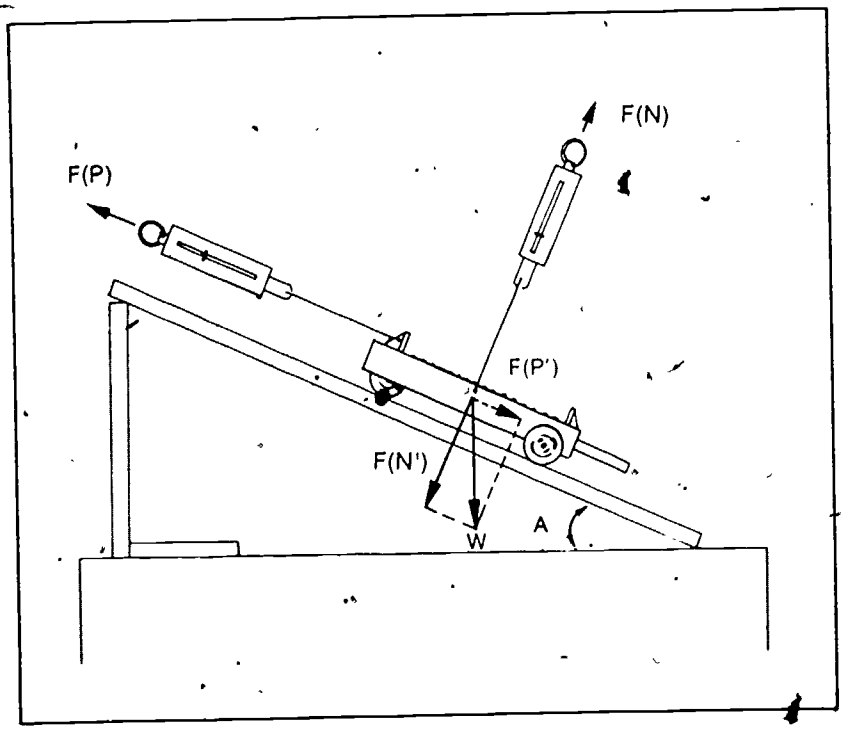

1. Place a dynamics cart of known weight on an inclined plane and adjust the tilt so that the block or cart is free to slide down the inclined plane.

2. To make a vector diagram that will show the components of the weight of the cart when it is on the inclined plane, draw on graph paper a horizontal line representing the surface of the laboratory table. Also draw a line representing the inclined plane. The angle between the two lines must be the same as the actual angle between the table surface and the inclined plane. Draw a small rectangle to represent the cart on the incline and place a dot at its center to indicate the position of its center of gravity. Choose a convenient force-distance scale and draw a vector vertically downward, starting at the dot, to represent the weight of the cart in newtons (W).

3. Resolve the weight vector into two components at right angles to each other—one parallel to the incline F(P') and the other perpendicular to the incline F(N'). The first component is the force which pulls the block or cart down the inclined plane and the second is the force that presses the block or cart against the inclined plane.

4. Place the block or cart on the inclined plane and connect two spring scales to it as shown in the diagram. Pull on one spring scale perpendicular to the plane and pull on the other spring scale parallel to the plane. When the tension of the two spring scales has been adjusted properly, it should be possible to remove and reinsert the plane without disturbing the position of the cart. Record the readings of the two spring scales, [F(N) and F(P)].

DATA AND ANALYSIS

Weight of dynamics cart, W = 12.7 newtons.

Angle of incline, A = 22.0 degrees.

Sine of angle of incline = .375

Cosine of angle of incline = .927

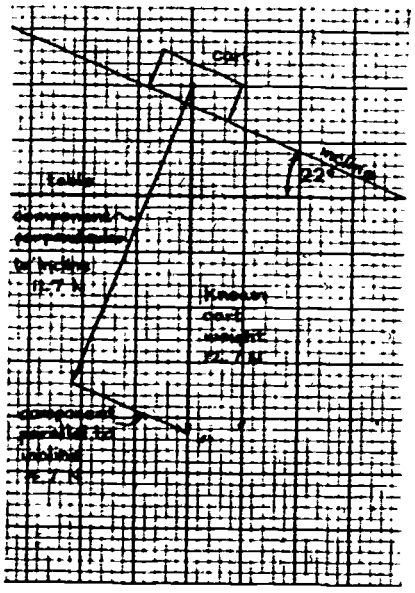

	Component of weight parallel to surface of inclined plane			Component of weight perpendicular to surface of inclined plane		
TRIAL	Spring scale reading F(P)	Vector diagram value F(P')	% error	Spring scale reading F(N)	Vector diagram value F(N')	% error
1	4.5	4.7	4.4%	11.5	11.7	1.7%
2						
3						

1. Measure the lengths of the components of the weight vector on the vector diagram. Use your force-distance scale to convert these lengths to force magnitudes, and record these values in the data chart [F(N') and F(P')].

2. Compare the values of the components obtained from the vector diagram with the corresponding values measured with the spring scales. Calculate the percent error by dividing the difference between the diagram value and the spring-scale value by the spring-scale value and multiplying by 100%.

EXPERIMENT 5. FORCES CAUSED BY WEIGHTS ON INCLINE

NAME: CLASS HOUR:

3. Change the angle of incline and repeat the procedure above for each change of incline.

SUGGESTIONS AND TECHNIQUES

Minimize the friction between the cart and the incline by making sure that the wheels of the cart are well lubricated and spin freely.

Make it a habit to gently tap a scale with your finger to be sure that it is not stuck, immediately before making each new reading.

RELATED QUESTIONS AND SUGGESTED ACTIVITIES

1. What relationship can you establish between the magnitude of the component along the incline and the sine or cosine of the angle of inclination? *There is a direct proportional relationship between the magnitude of component along the incline and the size of the angle.*

2. What relationship can you establish between the magnitude of the component perpendicular to the incline and the sine or cosine of the angle of inclination?

There is a direct proportional relationship between the magnitude of the perpendicular component and the cosine of the angle.

3. Calculate the angle of inclination that would result in a component parallel to the incline that has a magnitude half as great as the weight of the cart. Angle (F/2) = 30°
Set your incline at the angle that you have calculated and use a spring scale to measure the force parallel to the incline. Account for any differences between your predictions and the actual results of this trial.

With the incline set at 30°, the parallel component of the 12.7N cart was 6.5N rather than the theoretical value of 6.35N. There is a 2% error in reading a spring scale and a quarter degree error in reading a protractor.

EXPERIMENT **TIMER CALIBRATION**

6

NAME. CLASS HOUR.

LAB PARTNERS DATE

PURPOSE

Any device which produces repeatable events at regularly spaced intervals may be used as a timer. In this experiment, several timers will be investigated and compared for their timekeeping abilities.

Investigate as many different types of timer as time permits.

If time is limited, note that Part B (water clock) can be skipped if you plan to omit Experiment 9, Part A (Galileo's apparatus) and Part C (tape timer) can be skipped if you plan to omit Experiment 19. Students should work on any of the timers in pairs.

A. PENDULUM TIMER

APPARATUS PREPARATION

1 hooked standard mass, 200 g
1 string, about 75 cm long
1 support to hold pendulum
1 stopwatch

PROCEDURE

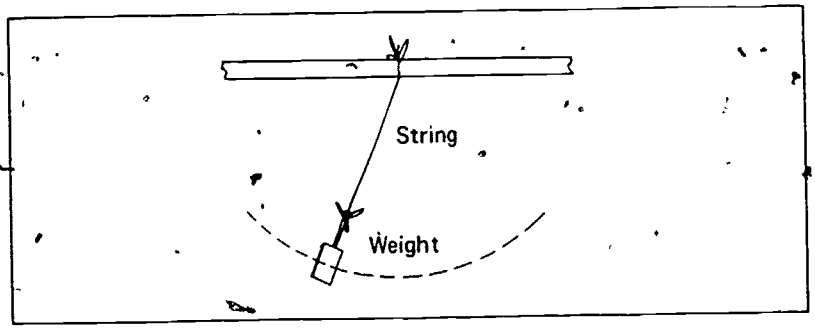

1. Suspend a weight from a string approximately 10 centimeters long. Fasten the top of the string to a stationary overhead support. Start the weight swinging in a small arc. Using a stopwatch as a standard, record the time that is necessary for the pendulum to complete the number of swings given in the left hand column of the data table for this experiment. Repeat this procedure several times until you are sure that the results are consistent and repeatable.

2. Increase the length of the string to 15 cm to change the timing interval of the pendulum. Using the stop watch find the time that is required for the pendulum to complete the number of swings given in the data chart.

3. Readjust the length of the string to several different values, recording the swinging times required for each length.

4. For each pendulum length, calculate the period of the pendulum by dividing the total time by the number of complete swings.

5. Make a period vs. length graph by plotting the pendulum period associated with each of the string lengths. Draw a smooth curve through the points that were plotted.

See sample graph on next page. Before students draw curve, check that they realize it should pass through the origin (period approaches zero as length approaches zero).

SUGGESTIONS AND TECHNIQUES

1. In calibrating the pendulum timer, it is customary to measure the length of the pendulum from the point of suspension to the center of the weight. In practice this may be found to be difficult to do with precision. If the pendulum is measured from the point of suspension to the top of the weight or to the bottom of the weight, it will not affect the timer calibration as long as all measurements are made to the same point.

2. When using the water clock, it is important that the water level be adjusted to the same height before each trial; for consistent results. You might wish to place a piece of sticky tape on the outside of the funnel to mark this level.

3. The rate of flow of water will decrease as the water level becomes lower. To minimize this effect, use a large funnel and small diameter glass tubing.

4. To get rid of air bubbles that may form in the glass tubing, fill the funnel *above* the sticky tape and let the water run through the tubing until the marked level is reached.

5. If the dots recorded by the tape timer are too close to be counted easily, pull the tape through more quickly to spread the dots out, or change the frequency of the timer if possible.

Graph predicts pendulum length of 25 cm will give period of 1.05 sec. Measured time for 20 swings: 20.8 sec. Experimental period therefore 1.04 sec (1% error).

6. Select a string length which appears on the calibration curve but which was not determined experimentally. From the calibration curve, predict the time intervals that are required for the various numbers of swings at this particular length. Check these predictions experimentally using the string and swinging weight.

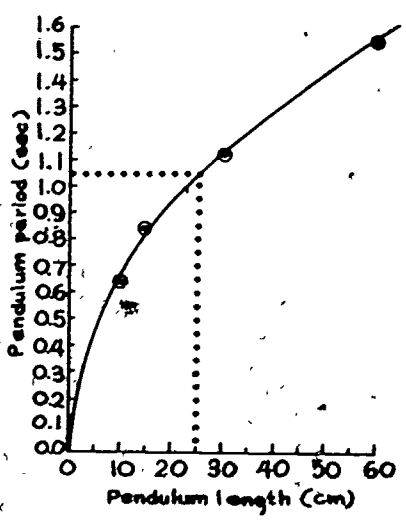

DATA

TRIAL	Number of Swings	LENGTHS OF PENDULUM					
		10 cm	15 cm	30 cm	60 cm	cm	cm
		Time in seconds					
1	1	0.2	0.6	1.2	1.4		
2	1	0.2	0.6	1.0	1.6		
3	1	0.3	0.4	0.8	1.8		
4	5	3.0	4.2	5.4	7.8		
5	5	3.2	4.0	5.4	8.0		
6	5	3.0	4.0	5.6	8.2		
7	10	6.4	8.0	11.4	16.0		
8	10	6.4	8.0	11.4	15.8		
9	10	6.4	8.0	11.4	16.0		
10	20	12.8	16.0	22.6	31.0		
11	20	12.8	15.8	22.4	31.0		
12	20	12.6	15.6	22.4	31.4		
	Pendulum period (The time for one swing)						
		0.64	0.84	1.12	1.55		

EXPERIMENT 6. TIMER CALIBRATION

NAME: CLASS HOUR:

B. WATER CLOCK

PROCEDURE

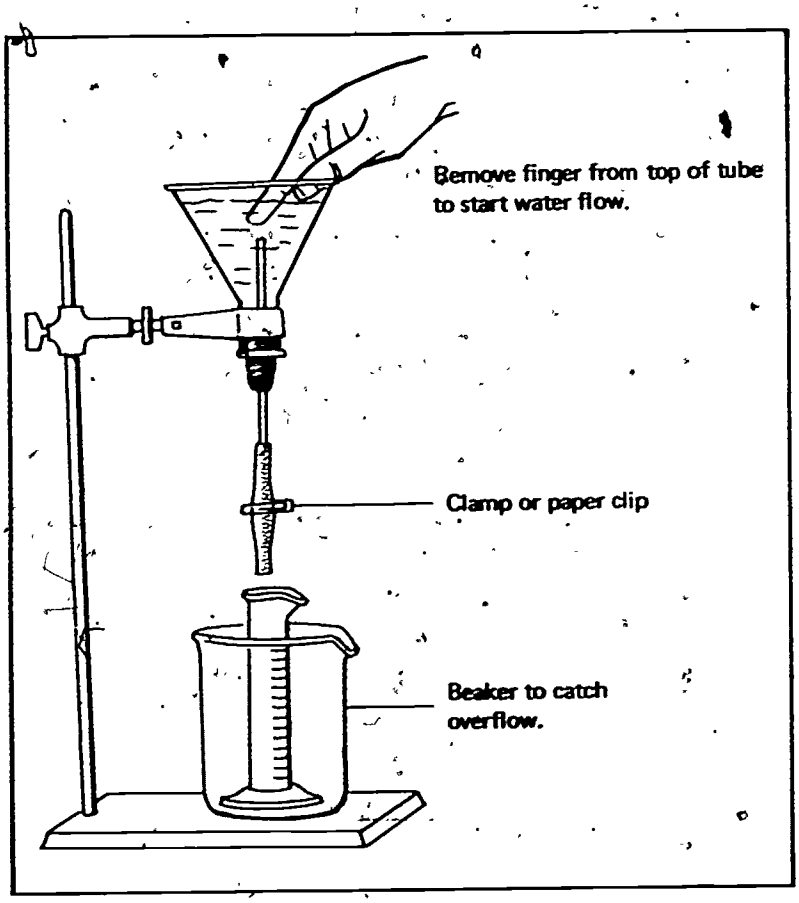

APPARATUS PREPARATION

- *1 funnel, top diameter 10 cm (or larger*
- *1 piece glass tubing, about 10 cm long, with outside diameter to fit into funnel base*
- *1 piece rubber tubing, 5 cm long, with inside diameter to fit snugly over glass tubing*
- *1 pinch clamp or paper clip for rubber tubing*
- *1 piece of rubber tape or putty to seal glass tubing in funnel*
- *1 stop watch*
- *1 graduated cylinder, 200 ml*
- *1 beaker, large enough to hold graduated cylinder*
- *1 ringstand and clamp*
- *sticky tape (transparent or opaque)*

1. Make a water clock by wrapping some rubber tape around a short length of glass tubing and inserting it in a funnel, as shown in the illustration. Clamp the funnel to a stand. Under the lower end of the tubing attach a short length of rubber tubing with a clamp or paper clip. This will be used to regulate the flow of water.

2. Place a graduated cylinder below the rubber tubing. It is also a good idea to use a beaker to prevent water from accidentally spilling over the lab table.

3. Using a stop watch, determine the amount of water that is released when you lift your finger and then press it down on the top of the tubing after the time intervals given in the data chart. Run several trials. At the end of each trial, be sure to replace the water in the funnel so that the water starts at the same level each time.

DATA AND ANALYSIS

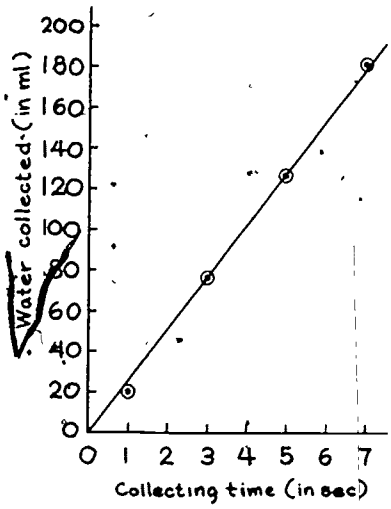

The graph shows a straight-line relationship between the amount of water collected and the collecting time, unlike the curved graph for the pendulum length vs. period.

	Milliliters of water collected			
Collecting time	1 sec	3 sec	5 sec	7 sec
Trial 1	20	74	126	182
2	26	75	124	178
3	15	78	128	184
4				
Average	20	76	126	181

1. Calculate the average amount of water collected in each time interval. Prepare a graph of amount of water collected *vs.* collecting time.

2. Using your graph, predict the amount of water that would be collected in 4 seconds. *102 ml*

Try it and see if you were right. _____

3. If your water clock collected 25 milliliters of water, how much time would that represent in seconds?

1 sec

Check your answer with a stop watch. _____

C. TAPE TIMER

APPARATUS PREPARATION

1 tape timer
batteries or low voltage ac (as specified by manufacturer of timer)
1 stop watch
1 length of paper tape, about 5 meters long

PROCEDURE

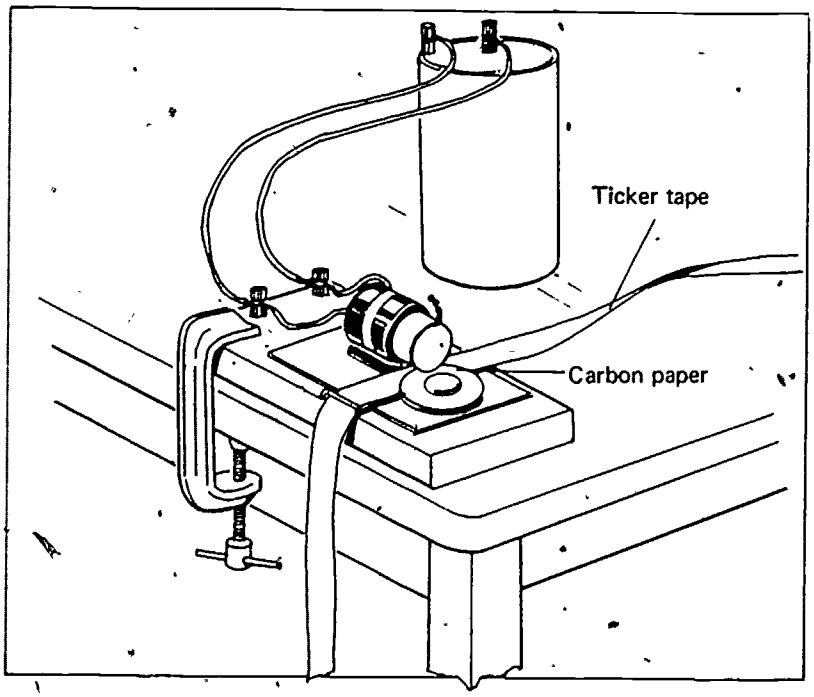

EXPERIMENT 6. TIMER CALIBRATION

NAME CLASS HOUR

1. Clamp a tape timer to the laboratory table.

2. Pull a length of tape through the timer for three or four seconds, using a stop watch to measure the time. As the tape goes through, a vibrating clapper or a whirling chain makes a series of dots on the tape.

3. Count the number of dots recorded on the tape, omitting the first dot, and enter on the data chart.

4. Repeat this several times, always omitting the first dot when counting dots.

DATA AND ANALYSIS

	Time in sec	Number of dots
Trial 1	3.0	182
Trial 2	3.0	179
Trial 3	3.0	185
Trial 4	3.0	174
Trial 5	3.0	178
Trial 6	3.0	181
TOTAL	18.0	1079

Time interval between two successive dots 1/60 sec

1. Find the total time and the total number of dots recorded for all your trials.

2. From the totals, calculate the time interval in seconds that elapsed between every two successive dots recorded by the timer.

RELATED QUESTIONS AND ACTIVITIES

1. Suppose that the time interval of one second were to be defined as an interval on one of the clocks that you worked with during this experiment. What is a main advantage of defining a second in this manner?

A main advantage is that materials for these timers are inexpensive and readily available throughout the world.

What is a main disadvantage?

Timer is not precise and intervals are not identical.

2. Which of the clocks that you calibrated during this experiment would make the most reliable timer?

Probably the pendulum timer, provided it is always used in the same location (so that the force of gravity is constant) and the pendulum is released from the same position at the start of each new trial.

3. How could each of these clocks be improved to be a more reliable and practical timekeeper?

Pendulum timer: string as light as possible, unstretchable, firmly fixed at top, rigid support, mechanism to count swings, put in vacuum (no air resistance). Water clock: automatically replace water to keep level constant, be able to measure large volumes of water Tape timer: count dots and pull tape automatically.

4. Construct an improved timer having some of the features described in the previous question and calibrate it in terms of standard seconds.

5. No clocks are perfect. Check one of your watches, clocks, or other timers with short wave radio signals at 10.0 MHz and 20.0 MHz or official time signals given by the telephone company (check your phone book for the telephone number in your area) over a twenty-four-hour period Record your results.

Time (sec)

TRIAL	Timer 1	Standard	Timer 2	Standard
1				
2				
3				
4				
5				
6				

EXPERIMENT 7 RECORDING MOTION WITH STROBE PHOTOGRAPHS

NAME CLASS HOUR

LAB PARTNERS DATE

PURPOSE

A valuable technique for recording motion is to photograph an object using a multiple-exposure technique called strobe photography. Several images of an object, showing its position at different instants of time, are recorded on a single sheet of film. If the time interval between the exposures of the different images is known, and if the scaling factor between distances in the photograph and actual distances is known, the motion of the object can be analyzed. Although any camera may be used to take the photograph, a Polaroid camera is suggested because the photograph can be analyzed almost immediately after exposure. This experiment will help you learn the general principles of strobe photography and familiarize you with the particular Polaroid camera that is available.

There are three basic techniques for making multiple exposures of a moving object. The first is to open the camera shutter in a darkened room and then illuminate the object with short flashes of light spaced at regular intervals before closing the shutter. The second technique is to place a flasher, or blinky, on the object and photograph it in a darkened room with the camera shutter open. The third technique is to illuminate the object continuously and rotate a stroboscopic disc in front of the camera lens with the shutter open. Radial slits in the rotating disc expose the film for a short interval of time as each of the slits in turn moves across the front of the camera. Use all the techniques for which equipment is available.

Adjusting the Camera

1. Load the camera with 3000-speed black and white Polaroid film.

2. Mount the camera on a tripod and adjust the height so that the camera is about level with the object being photographed.

3. Attach a cable release to the camera so that the shutter may be operated without jarring the camera.

4. Point the camera so that the plane of the film is parallel to the path of the object being photographed.

5. Look through the viewfinder and adjust the distance between the object and the camera so that the complete event may be recorded on the film. Adjust the lens for the best focus with the object in the center of the field of view. To photograph an object moving

Polariod film is expensive and costs can be prohibitive if students are allowed to experiment individually with cameras and accessories. To reduce these costs somewhat, it is suggested that students be required to work in pairs. After each snapshot, one student can then analyze the positive print and the other the paper negative.

To project a Polaroid stobe photograph, punch small pinholes through the print at key positions of interest. When the print is placed on an overhead projector, these points will appear as bright spots on the screen or blackboard, and the distances between them can be easily measured by a student with an ordinary meter stick.

In addition to the techniques described in this experiment, there is a new technique which has possible merit. An inexpensive modulator is now available which can be attached to your helium-neon laser. With one of these units, the laser can be made to flash on and off at known rates from zero to 100 kilohertz. The light from the laser is bright and if the laser is low powered, it is perfectly safe. These devices are available from scientific supply companies and from manufacturers of educational laser equipment

SUGGESTIONS AND TECHNIQUES

1. (For electric-eye Polaroid cameras.) When using 3000-speed black-and-white film, set the film selector on the camera at 3000 for xenon strobe photos but at 75 for blinky or rotating-disc photos. The lens opens much wider at the 75 setting and lets in more light.

2. (For older, non-electric-eye Polaroid cameras.) If the camera has shutter numbers from 1 to 8, the lens is wide open for settings 1 through 4. The lens opening decreases in steps for settings 5 to 8. If the camera has EV numbers from 10 to 17, the lens is wide open for settings 10 through 13, and the opening decreases in steps for settings 14 to 17. The larger the opening, the more light falls on the film.

3. (For older, non-electric-eye Polaroid cameras.) The exposure knob must be reset at "B" after every exposure, as it automatically returns to the "I" setting.

4. The xenon strobe should not be aimed toward the dark background, or it will cause annoying reflections. Try placing it so that it shines along the path of the bulldozer.

5. The uncovered slots on the strobe disc must be equally spaced or the exposures will not be equal time intervals apart.

6. There is no advantage to keeping the shutter open after the object has moved out of the camera's range. You will merely expose the background longer and reduce the contrast between it and the object.

through a distance of 1.0 meter, a Polaroid camera would have to be about 1.4 meters away.

6. If your camera has an electric eye, cover it. If your camera is an older model with no electric eye, set the exposure knob in front of the camera at the "B" position. With the electric eye covered or the knob set at "B," the shutter will remain open as long as the plunger of the cable release is held. The shutter will close when the plunger is released.

A. XENON STROBE LIGHT

PROCEDURE

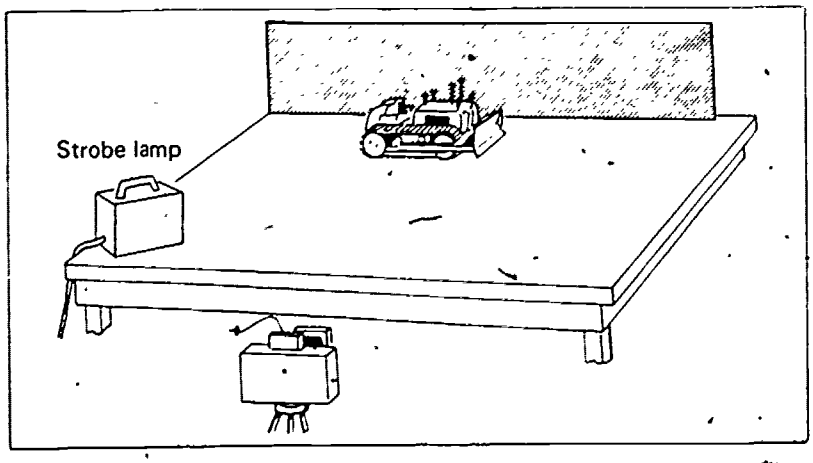

EXPERIMENT 7. RECORDING MOTION WITH STROBE PHOTOGRAPHS

NAME CLASS HOUR

1. Place a toy bulldozer on a laboratory table. Arrange a dark background, such as a black cloth screen, behind the bulldozer.

2. To pinpoint the position of the bulldozer as it moves across the table, paste a small square of aluminum foil near the top of the bulldozer for a marker and place a meter stick on the table along the path of travel.

3. Using a xenon strobe light, adjust the flash for the lowest repetition rate that is available. In a darkened room, practice several dry runs, until the techniques have been perfected.

4. Expose a film under stroboscopic light, recording the photographic conditions in the following chart. If the film is over- or under-exposed, try another, using different exposure conditions (see Suggestions and Techniques). This chart will be quite valuable for future reference.

DATA

Camera Model No._____ Film speed_____ Date_____

Strobe Model No _____

Flash rate	Distance from camera to object	Film selector or shutter number	Quality of exposure

B. BLINKY

PROCEDURE

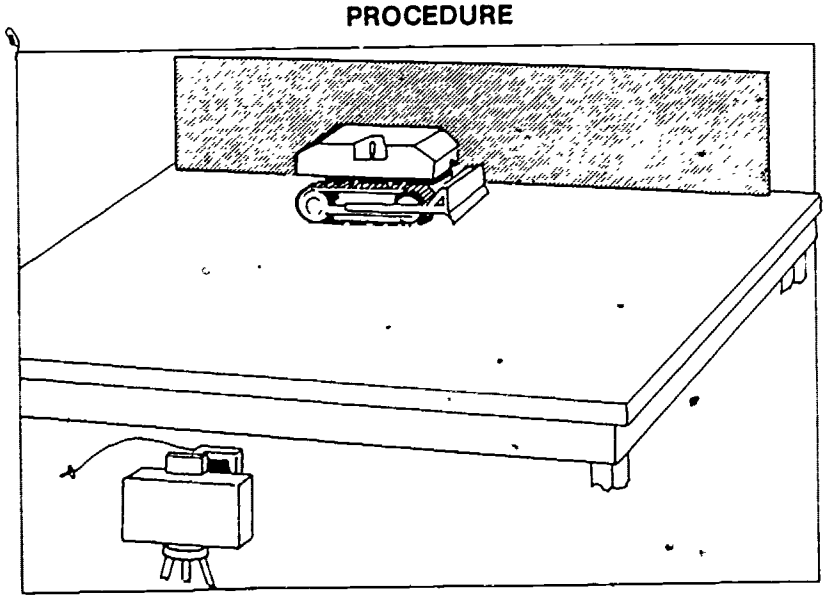

Place a blinky (neon or incandescent flasher) on top of a bulldozer and photograph it against a dark background with a Polaroid camera as it travels across the top of a table for a distance of 1 meter in a dark room. Use a small incandescent lamp to provide just enough illumination to make the meter stick clearly visible in the photograph. Record the conditions in the following chart. If the film is over- or under-exposed, try another, using different exposure conditions (see Suggestions and Techniques).

DATA

Camera Model No._____ Film speed_____ Date_____

Flash rate	Distance from camera to object	Film selector or shutter number	Quality of exposure

C. ROTATING STROBE DISC

PROCEDURE

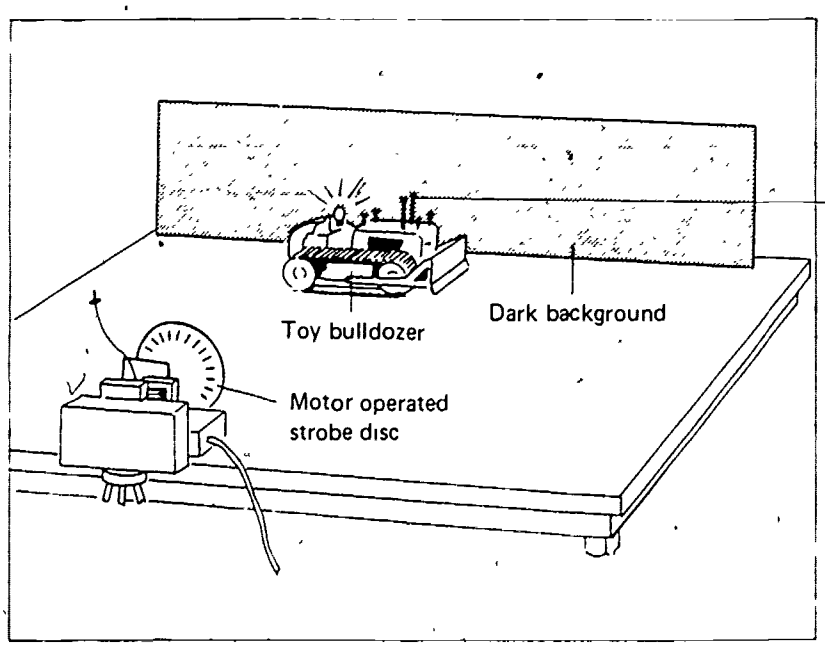

Mount a motor-operated strobe disc in front of a Polaroid camera, following the instructions given by the manufacturer. Close all of the slits in the disc except one, by covering them with tape. As the disc rotates at constant speed (given the manufacturer's instructions) the film will be exposed for one small time interval during each revolution.

EXPERIMENT 7. RECORDING MOTION WITH STROBE PHOTOGRAPHS

NAME CLASS HOUR

Thus, if the motor is turning the disc at a speed of 300 revolutions per minute, the disc will rotate 5 times per *second* and the exposures will be 1/5 second apart. If two slits at opposite ends of the disc are uncovered, the film will be exposed twice during each revolution, making the exposures 1/10 second apart. As additional slits are uncovered, the interval between exposures will be decreased accordingly. Connect a flashlight bulb to a dry cell and place them on top of a toy bulldozer with the light burning continuously. Using the rotating strobe disc, photograph the moving bulldozer against a dark background. Record the photographic conditions in the following chart. If the film is over- or under-exposed try another, using different exposure conditions (see Suggestions and Techniques).

DATA

Camera Model No._____ Motor speed_____ Film speed_____

Exposure interval	Distance from camera to object	Film selector or shutter number	Quality of exposure

EXPERIMENT 8 STRAIGHT-LINE MOTION AT CONSTANT SPEED

NAME: CLASS HOUR

LAB PARTNERS: DATE

PURPOSE

In this experiment, the position of a bulldozer moving in a straight line is measured at various times, to determine the bulldozer's speed.

This experiment works best with the students working in groups of three: one operating the bulldozer, one keeping the time, and the third recording the data. Toy bulldozers are suggested because they are readily available from suppliers of Project Physics apparatus, but almost any battery-operated toy will do if it travels slowly enough to be timed for 30 seconds.

APPARATUS PREPARATION

1 battery-operated toy bulldozer
1 meter stick or tape measure
1 stop watch or wrist watch with sweep second hand

PROCEDURE

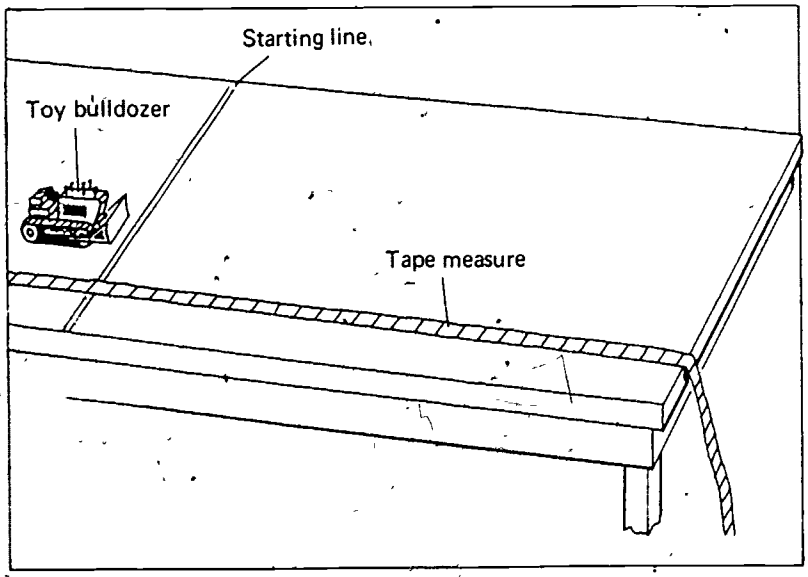

1. Allow a toy bulldozer to travel across a table top or the floor for a distance of 3 or 4 meters in a test run.

2. Place a tape measure or series of meter sticks along the path of travel. Start the bulldozer a few centimeters before the starting line. When the bulldozer reaches the starting line, start keeping track of the time with a stop watch or sweep second hand.

3. Five seconds after the bulldozer crosses the starting line, record its position. Without stopping the bulldozer, repeat this procedure at 5-second intervals. Enter all of the data in the first column of the data chart.

4. Reduce the speed of the bulldozer by forcing it to drag a load behind as it travels. Following the procedure above, record the position of the bulldozer at the end of each 5-second interval in the second column of the data chart.

5. Add heavier weights behind the bulldozer to reduce its speed further and record position and time data in the remaining columns of the data chart.

SUGGESTIONS AND TECHNIQUES

1. Before recording any data, it is a good idea to make several trial runs to become familiar with the apparatus.

2. Use fresh batteries in the bulldozer to ensure that it will operate when dragging heavier loads.

DATA AND ANALYSIS

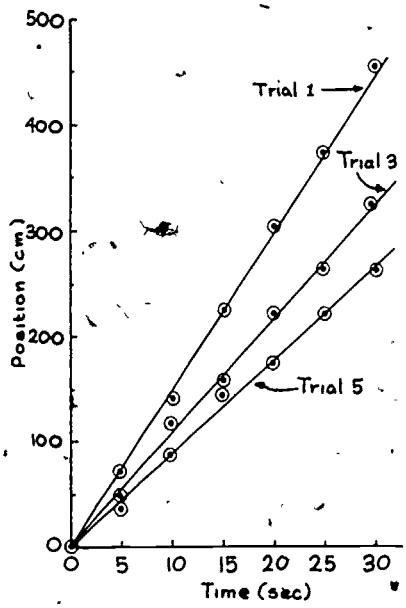

	Position in cm (x)									
	Trial									
Time in sec (t)	1	2	3	4	5	6	7	8	9	10
0	0	0	0	0	0					
5	75	56	44	52	37					
10	140	133	117	100	87					
15	223	190	166	146	142					
20	305	259	221	201	179					
25	372	335	266	257	220					
30	453	390	323	292	267					
Average speed in cm/sec. Vav	15	13	11	10	8.9					

1. For each trial calculate the average speed, Vav, by dividing the total change in position by the total time interval that elapsed, t.

2. Use the data for the first trial to plot a graph of position *vs.* time.

3. On the same piece of graph paper, plot a graph of position *vs.* time for each of the other trials you ran. Label each graph line with the number of the associated trial.

4. The shape of a position *vs.* time graph for motion at constant speed is a straight line. Do your graphs have this shape?

Yes. (But not all points lie exactly on the lines.)

5. How does the steepness of the graph line change as the speed of the bulldozer is decreased?

The graph becomes less steep as the speed of the bulldozer is decreased.

EXPERIMENT 8. STRAIGHT LINE MOTION AT CONSTANT SPEED

NAME CLASS HOUR

6. For one of the trials, calculate the change in position during each 5-second interval.

Time (t) (sec)	Position (X) (cm)	Interval (sec) (t)	Change in position (cm) (s)
0	0		
5	52	0-5	52
10	100	5-10	48
15	146	10-15	46
20	201	15-20	55
25	257	20-25	56
30	292	25-30	35

Does the position change by the same amount in equal time intervals? What does this tell you about the speed?

The position did not change by exactly the same amount in equal time intervals. This shows that the speed was not constant, but fluctuated somewhat.

Ask students who get consistently good results—that is, equal changes in position—to show the rest of the class their techniques.

RELATED QUESTIONS AND ACTIVITIES

1. Why is it wise to have three or more pairs of position and time values before drawing a graph for motion at constant speed?

It is impossible to tell if the distance-time graph is a straight or curved line unless at least three points are plotted. A straight line indicates fairly constant speed but a curved line suggests that the speed was varying.

2. If you made Polaroid photographs of a moving bulldozer in Experiment 7, analyze them to find the speed of the bulldozer.

3. An automatic position vs. time graph may be made by using 2 bulldozers. The first bulldozer pulls a wide strip of paper across the top of the table while the second bulldozer pulls a felt tip pen at right angles to the paper. The pen can be held upright by sticking it in a block of Styrofoam or other lightweight material as shown in the diagram below.

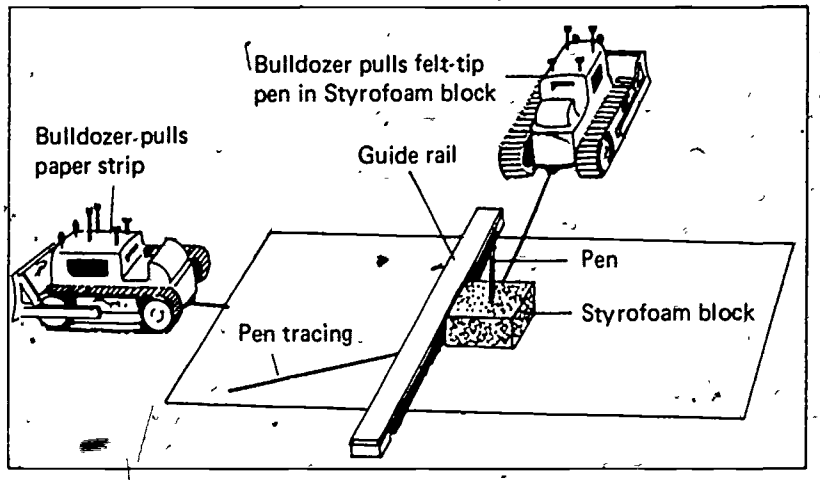

EXPERIMENT 9 CONSTANT ACCELERATION USING A WATER CLOCK

NAME: CLASS HOUR:

LAB PARTNERS: DATE:

PURPOSE

This experiment provides a challenge for you to obtain meaningful data of accelerated motion using very simple apparatus that was available over 400 years ago.

It is recommended that students work in groups of two or three. If possible, several types of apparatus should be set up in the laboratory with provision made for students to complete experiments at home if they find that more time is needed for a particular set of measurements.

PROCEDURE

GALILEO'S APPARATUS

APPARATUS PREPARATION

1 board, at least 1 meter long, with a channel to roll ball down
1 steel ball, 2 to 3 cm in diameter, or equivalent
1 water clock (see Experiment 6, Part B, for construction details)

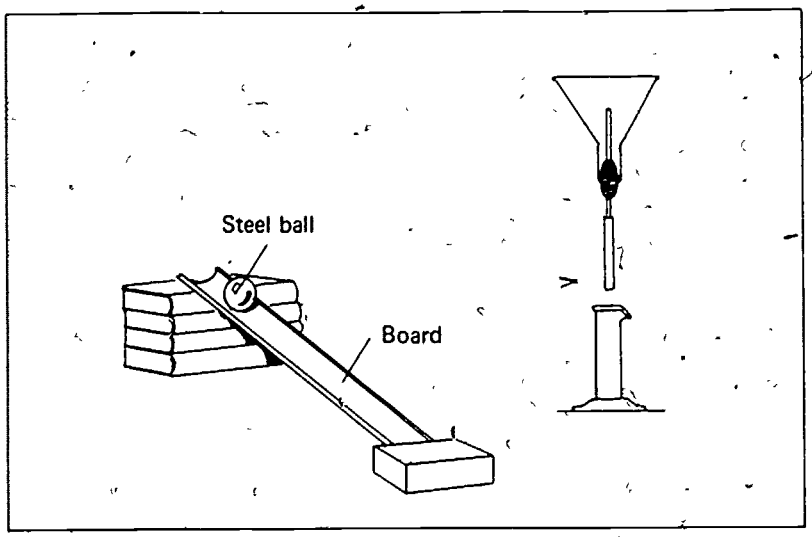

Using the apparatus shown, tilt a board about 15° with the horizontal. Start a steel ball from rest 15 centimeters above the barrier at the bottom of board. At the instant the ball is released, start the water clock; stop the clock the instant the ball hits the barrier. Repeat this several times, recording the quantity of water that accumulates during each trial. Using the same incline, increase the distance that the ball rolls to 30 centimeters and record the amount of water that accumulates for each of several trials at this distance. Repeat this procedure several more times, increasing the distance that the ball rolls in steps of 15 centimeters. Using this technique, the principle characteristics of accelerated motion will be observed, but the time will be given in milliliters of water instead of the more familiar units of seconds.

SUGGESTIONS AND TECHNIQUES

1. Practice releasing the ball with one hand while starting the water clock simultaneously with the other.

2. Refer back to Experiment 6 for additional instructions on using a water clock.

DATA AND ANALYSIS

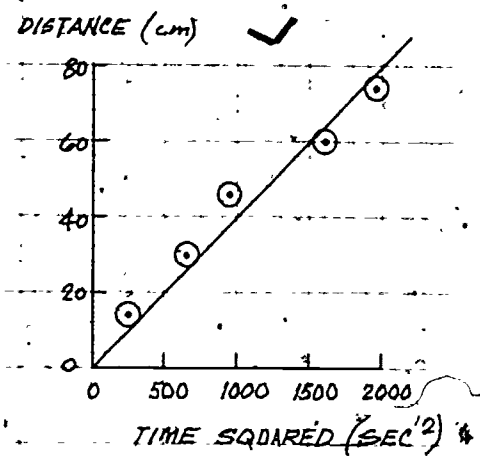

Distance s in cm	Time t (milliliters of water) Trial 1	Trial 2	Trial 3	Trial 4	Average time t	t^2
15	14	17	13	15	15	225
30	25	26	25	24	25	625
45	31	32	30	31	31	961
60	40	41	39	41	40	1600
75	44	43	44	43	44	1936

1. When several trials have been completed, calculate the average time t(av) (in milliliters of water) for each distance and enter these values in the data chart.

2. For each distance, calculate the square of the average time and enter these calculations in the data chart.

3. The distance covered by an object uniformly accelerated from rest is given by the relationship; $s = \frac{1}{2} at^2$. Thus, if a graph of s vs t^2 is plotted, it should result in a perfectly straight line. Make a careful graph with time (in ml of water)^2 on the x axis and displacement (in cm) on the y axis. Draw the best straight line between the points and see how close your points come to this line.

***When your data is entered in the computer, it will compute the best straight line between the data points by the least squares method and will indicate how closely the data follows theoretical results.

EXPERIMENT 10 ACCELERATION OF A SPINNING DISC

NAME _____ CLASS HOUR _____

LAB PARTNERS _____ DATE _____

PURPOSE

In free fall, objects move too fast to observe details of their motions. In this experiment, most of the gravitational energy is taken up by the spinning of a disc so its motion down a slope can be readily observed.

PROCEDURE

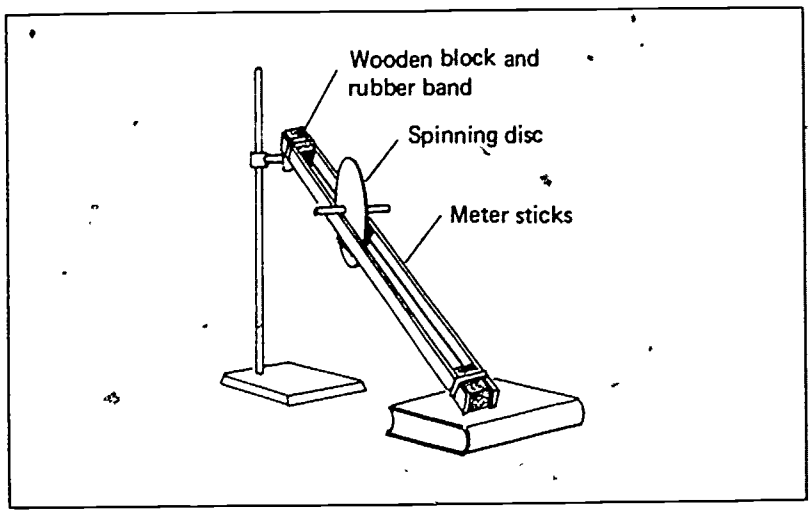

Arrange a disc between two meter sticks as shown. Allow the disc to roll downhill between the meter sticks for a distance of 15 centimeters. With a timer record the time from the instant the disc was released until it has traveled the required distance. Repeat this several times to be sure that the data are consistent. Then increase the distance that the disc rolls in steps of 15 centimeters, running several trials for each distance. Record all the time and distance data in the data chart

SUGGESTIONS AND TECHNIQUES

1. Practice releasing the disc so it starts from rest without any initial motion.
2. Watch out for any slipping that might take place when the disc spins fast. Disregard any trials where slipping is observed.
3. Disregard any trials where the disc rubs against the meter sticks at its sides.

Students may find that some of the apparatus does not "work well" because of excessive friction or slippage, and the acceleration data will be anything but uniform. For example, the spinning disc will probably start slipping along the top of the meter sticks as its speed increases, giving some weird data. Encourage the students to recognize these sources of error and see if they can improve the apparatus to obtain better data. Given encouragement, they will "invent" improvements such as covering the top surface of the meter sticks with masking or friction tape to increase friction between it and the spinning disc.

APPARATUS PREPARATION

1 circular disc, 10 to 15 cm in diameter, with an axle firmly fixed in the center so that it will rotate with the disc. Disc may be made of wood, fiberboard, or metal or may even be a rubber wheel.

- *2 meter sticks to act as an incline. Masking or friction tape stuck along the upper surface will prevent slippage of the disc.*
- *2 blocks of wood, approximately 5 cm by 5 cm (or slightly larger than the thickness of the disc)*
- *2 rubber bands (to hold apparatus together at the upper and the lower ends)*
- *1 ringstand and clamp, or other support (to hold the meter sticks in a tilted position)*
- *1 stop watch or a clock with a sweep second hand*

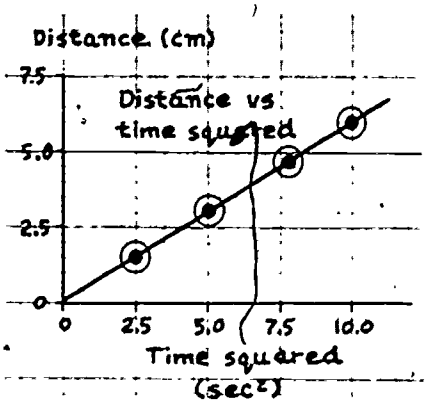

Distance s in cm	Time t (in sec) Trial 1	Trial 2	Trial 3	Trial 4	Average time t̄	t^2	Acceleration $a=\frac{2s}{t^2}$
15	4.8	5.2	5.2	5.0	5.0	25	1.2
30	6.8	7.4	7.2	7.0	7.1	50	1.2
45	8.4	9.0	8.8	9.0	8.8	77	1.1
60	10.0	10.2	10.0	10.0	10.0	10.0	1.2

RELATED QUESTIONS AND ACTIVITIES

1. Calculate the average time (t av) it took for the disc to cover each of the preset distances down the slope. Enter these data in the chart.

2 Calculate the square of the average time (t^2) for each trial. Enter these values in the data chart and plot a graph of distance vs average time squared.

3. Compare your graph with a theoretical curve for constant acceleration (a straight line). Repeat one of the trials and observe the motion of the disc carefully to note any motions of the disc that might account for deviations from the theoretical

***If you have a computer programmed for this experiment, use it to help in your analysis of the data.

4. The acceleration of an object starting from rest should follow the relationship: $a = 2s/t^2$ if the acceleration is uniform. Using this relationship, calculate the acceleration for each of the distances tried and enter the results in the last column of the data chart. If the accelerations are not exactly equal in each case, account for the variations by closely observing a few more trials of your apparatus. How do you account for the variations?

Most variations encountered in this experiment are due to inconsistent releases and sliding of discs along the meter sticks.

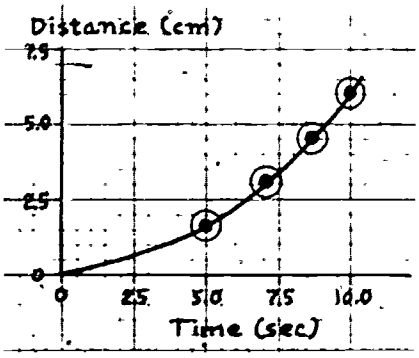

EXPERIMENT • 11 ACCELERATION USING A LINEAR AIR TRACK

NAME CLASS HOUR

LAB PARTNERS DATE

PURPOSE

Using the almost frictionless linear air track, many of the errors associated with conventional apparatus are eliminated and results approaching the theoretical values can be obtained.

PROCEDURE

LINEAR AIR TRACK

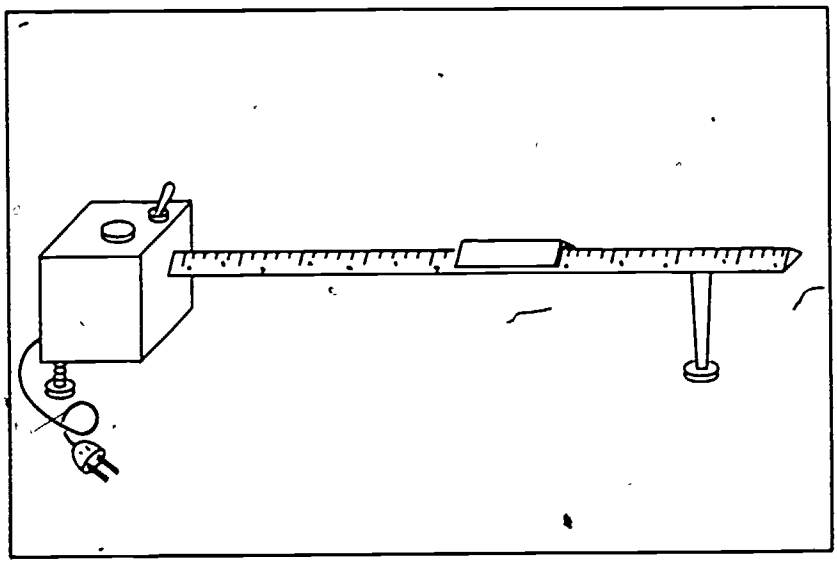

1. Test the air track to be sure that it is perfectly level. When the track is level, a glider will remain almost motionless when it is placed on any portion of the track. If necessary, ask your instructor for help in leveling the track.

2. Raise one end of the track a very small amount so the glider starts to move slowly downhill when it is released from rest. Measure the angle of tilt and record it for trial 1 in the data chart.

3. Using a stop watch or a photogate and electronic timer, measure the time required for the glider to slide down the air track for a distance of 15 centimeters from rest. Check this value for consistency by repeating the procedure a few times. When you are confident that the measurement is repeatable, enter the time in the data chart.

4. Repeat this for several additional trials increasing the distance in steps of 15 centimeters. Record these data for trial 1 in the data chart.

APPARATUS PREPARATION

1 linear air track with air supply and glider
1 meter stick (if air track is uncalibrated)
1 stop watch or a clock with sweep second hand

PROCEDURE

Using stop watches, which are usually reliable to the nearest tenth of a second, produces results which are within 5 to 10 percent of theoretical values. With photocell gates to start and stop a digital timer errors are reduced to less than 2%.

SUGGESTIONS AND TECHNIQUES

1. Adjust the air track for the minimum flow of air that will support the glider.

2. Many air tracks have calibrated screws at the base to facilitate measuring the angle of tilt. If necessary, check with your instructor to see how to make tilt adjustments and measurements.

3. Shut off the air blower whenever the track is not being used. This will help to prevent overheating of the motor and reduce ambient noise levels.

DATA AND ANALYSIS

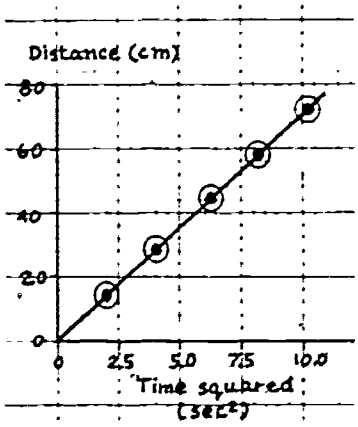

Distance d in cm	Time t (in sec) Trial 1	Trial 2	Trial 3	Trial 4	Average time t	t^2
15	1.4	1.4	1.5	1.5	1.4	2.0
30	2.0	2.1	2.0	2.1	2.0	4.0
45	2.5	2.6	2.5	2.5	2.5	6.3
60	2.8	2.9	2.8	2.8	2.8	7.8
75	3.2	3.3	3.3	3.2	3.2	10.2
a(c)	14.6	13.8	13.8	14.6		
a(t)	15.4	15.4	15.4	15.4		
Slope ∢A	.90°	.90°	.90°	.90°		
% Error E	5.2%	10.4%	10.4%	5.2%		

1. Determine if the acceleration is uniform for each trial by constructing a graph of s vs t^2. If the graph line is not perfectly straight, check the apparatus for any obstructions in the air flow or irregularities in the air track or glider. Account for any variations from a straight-line graph.

Almost all points lie on a straight line.

EXPERIMENT 11. ACCELERATION USING A LINEAR AIR TRACK

NAME CLASS HOUR

2. For each trial, calculate the acceleration from rest using the relationship $a = 2s/t^2$, where: s is the 75 cm distance on your data table and t is the time for the glider to travel this distance from rest. Enter the calculated accelerations in the data chart. a(c) = _____.

3. Theoretically, the acceleration of an object sliding without friction down a constant slope is given by the relationship a = g sin A where: g is the acceleration of gravity (980 cm/sec) and A is the angle of the slope measured in degrees, with respect to the horizontal. Calculate the theoretical acceleration for each trial, and enter the values in the data chart. a(t) = _____.

4. Calculate the percentage error by subtracting the calculated and theoretical values for the acceleration, dividing by the theoretical value and multiplying the dividend by 100% Enter the percentage errors values in the bottom row of the data chart

ACTIVITIES AND RELATED QUESTIONS

1. Wind resistance increases with velocity. Do an experiment to show this using an air track, electronic timer and a modified glider of your own design. Organize your data in tabular form and append your results and conclusions to this lab report

2. Predict the acceleration of a glider on the air track at any angle of slope that you have not yet tried using the relationship a = g sin A Then actually measure the acceleration of a glider down this slope and compute the percent error.

Angle A = 2°.

Acceleration that I predict is 34.2 cm/sec.

Acceleration found experimentally is 33 cm/sec

My % error is 2.9 %.

EXPERIMENT • PENDULUM

12

NAME _____ CLASS HOUR _____

LAB PARTNERS _____ DATE _____

PURPOSE

Objects in free fall accelerate towards the center of the earth under the influence of the earth's gravitational force. In this experiment you will measure this acceleration by observing the movements of a simple pendulum.

The simple pendulum method of determining the acceleration of gravity is easily done by students working in pairs or as individuals. To save time, if a student has already recorded data using the pendulum as a timer (Experiment 6, Part A), he or she may use that data to do the calculations as a homework assignment, and the lab time can be used for the swinging meter stick method.

The time it takes a simple pendulum to make a complete swing (back and forth) is called its period (T). If the pendulum is allowed to swing through a small angle, the period is given by the equation

$$T = 2\pi\sqrt{\frac{L}{g}}$$

where: L is the length of the pendulum measured from the point of suspension of the string to the center of the pendulum bob

g is the acceleration due to gravity

If you know L and T, you can determine g by rearranging the above equation.

$$g = \frac{4\pi^2 L}{T^2}$$

When L is in meters and T is in seconds, g will be in m/sec^2.

PROCEDURE

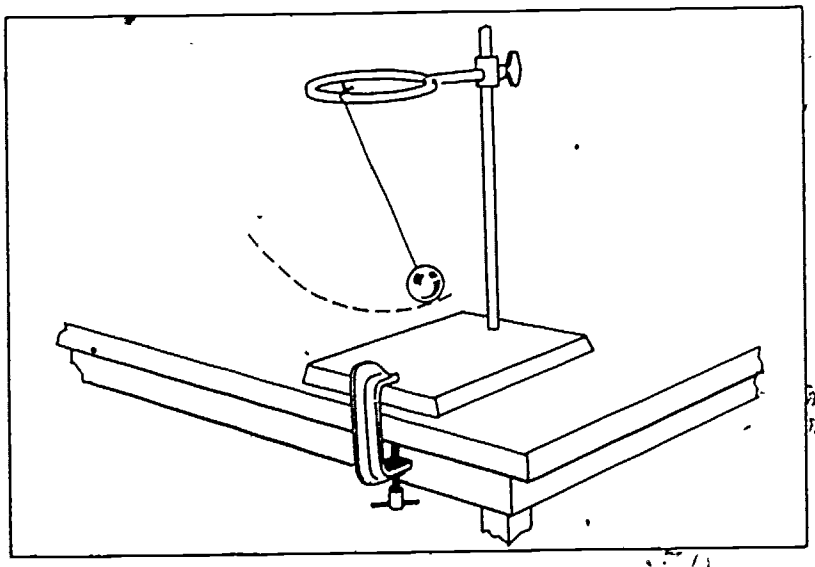

APPARATUS PREPARATION

1 drilled steel ball, 2 cm to 3 cm in diameter
1 string, about 75 cm long
1 support to hold pendulum
1 stop watch

SUGGESTIONS AND TECHNIQUES

1. If a ring stand is used to support the pendulum, be sure to clamp the base of the ring stand so that it will not vibrate as the pendulum swings.

2. Do all calculations in the laboratory with the equipment readily available so that any unusual results can be immediately rechecked. Using a calculator will save a great deal of time in making calculations.

3. You may wish to write down the value of the constant $4\pi^2$ so you don't have to calculate it each time.

1. Suspend a steel ball from a ring stand by a string so that the distance from the point of suspension to the center of the ball is 0.5 meter.

2. Displace the ball about 10 cm to the side and allow the ball to swing freely.

3. Observe one complete swing of the pendulum. Notice how the speed increases, then comes to rest as the pendulum moves away and then repeats this on the way back to the starting point.

4. Measure the time for 20 complete swings and divide by 20 to find the period of the pendulum (T) in seconds. Enter these values in the chart below.

5. Lengthen or shorten the pendulum string and repeat the above steps for as many trials as time permits. Calculate the value of *g* for each set of values *L* and *T*. In each case calculate your percentage error by finding the difference between your experimental value and the standard value, 9.8 meters/sec²; dividing this difference by the standard value; and multiplying by 100%.

TRIAL	Pendulum length (L) (meters)	Time for 20 swings t (sec)	Period (T) (sec)	$g = \frac{4\pi^2 L}{T^2}$ (m/sec²)	E Percent error
1	0.10	12.8	0.64	9.7	1.0%
2	0.15	16.0	0.80	9.3	5.3%
3	0.30	22.6	1.13	9.3	5.3%
4	0.60	31.0	1.55	9.9	1.0%
5					
6					
7					
8					

51

EXPERIMENT 12. PENDULUM

NAME CLASS HOUR

RELATED QUESTIONS AND ACTIVITIES

1. Friction at the point of suspension and air resistance will tend to increase the period of the pendulum over that of the theoretical value. Would this tend to make the experimental value for g too high or too low?

Too low.

2. Simulate a stronger gravitational force by placing a strong magnet a few centimeters below the center of the steel ball so that as the ball swings, it is pulled both by the earth's gravity and the magnet. How does this affect the period of the pendulum?

The period becomes less.

How would it affect the experimental value of *g*? _____

The value of g would increase.

3. The original instructions require you to displace the pendulum about 10 cm to the side for each trial. Devise an experiment to see what happens to the period of the pendulum as the initial amount of displacement is increased or decreased from this value. Record your results below.

At large displacement angles there is a noticeable decrease in the pendulum period.

EXPERIMENT • **ACCELERATION OF FREE FALL**

13

NAME: CLASS HOUR.

LAB PARTNERS: DATE.

PURPOSE

A freely falling body gains speed too quickly to observe its motion without precise timing apparatus. In this experiment, a pendulum, consisting of a swinging meter stick, permits accurate timing to the nearest one-hundredth second.

APPARATUS PREPARATION

- *1 ringstand and table clamp to hold base of ringstand steady*
- *1 dowel stick, 2 cm by 5 cm, with two nails about 4 cm apart protruding at least 3 cm*
- *1 swivel clamp to fasten block to ringstand*
- *1 meter stick with two eyescrews inserted into one end. If end of meter stick has brass cap, drill small pilot holes in end of cap to admit screws.*
- *1 piece of carbon paper, approx. 3 cm by 20 cm*
- *1 length of string, approx. 2.5 meters long*
- *1 drilled steel or brass ball*
- *1 stop watch or watch with sweep second hand*

PROCEDURE

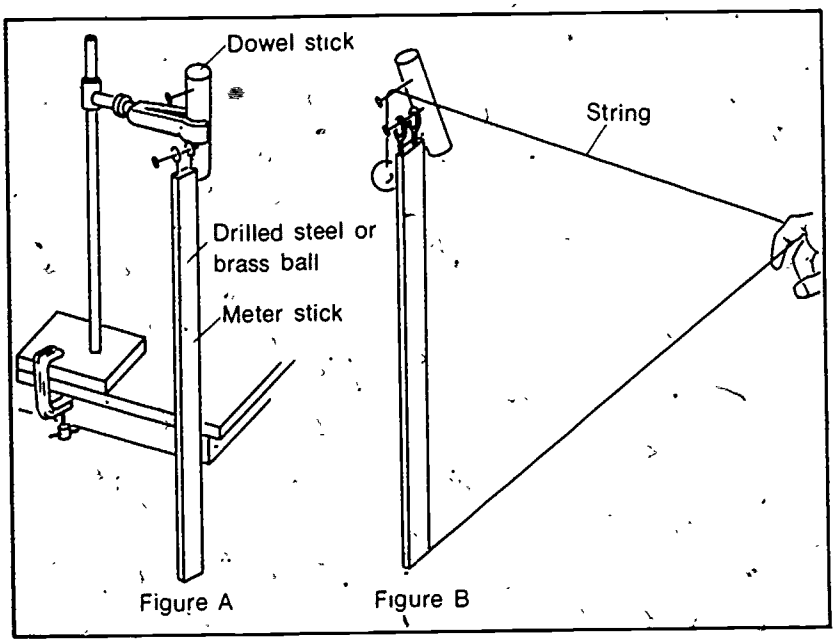

1. Suspend a meter stick from the lower of two nails in a wooden dowel stick, as shown in Figure A.

2. Displace the bottom of the meter stick approximately 20 cm from the vertical. With a watch measure the time it takes for the meter stick to swing back and forth 10 times. Calculate the period of the meter stick (time for one complete swing back and forth) and enter this in the data chart.

3. Using a string approximately 210 centimeters long, connect one end to the bottom of the meter stick and attach the other end to a drilled steel or brass ball. Loop the string over the upper nail.

4. Adjust the suspension so the ball barely touches the zero mark on the meter stick (Figure B).

5. Check the alignment of the apparatus by slowly lowering the ball along the meter stick. It should just graze the stick all the way down.

The meter stick and ball apparatus can be operated with a bit of practice by students working in pairs. The swinging meter stick acts both as a distance-measuring device and as a timer with a precision of ± 0.01 sec. Once the students have mastered the ball releasing and alignment techniques, this inexpensive apparatus is capable of measuring the acceleration of gravity with an error less than 2%.

SUGGESTIONS AND TECHNIQUES

1. If a ring stand is used to suspend the apparatus, be sure to clamp the base of the ring stand to the laboratory table to prevent it from wobbling.

2. Do not attempt to calculate the period of the swinging meter stick using the simple-pendulum equation

$$T = 2\pi\sqrt{\frac{L}{g}}$$

The mass of a simple pendulum is concentrated in the bob, whereas the mass of the meter stick is spread over its entire length.

6. Hold the string with the center of the ball at the zero mark of the meter stick and the bottom of the stick displaced about 20 cm from the vertical. With the apparatus in this position, releasing the string will simultaneously release the ball and start the meter stick swinging. The instant that the meter stick reaches its vertical position, the ball and the stick will collide. The interval between the time of release and the time of collision will be exactly one quarter the period of the meter stick. The distance that the ball fell is measured from the top of the meter stick to the point of collision.

7. During a trial run, determine the approximate point of collision between the ball and the meter stick. At this location tape a strip of white paper to the meter stick and cover it with a strip of carbon paper, placing the carbon side against the white paper. When the experiment is repeated, the ball will leave a mark on the white paper where it collides with the meter stick.

8. Using the equation

$$g = \frac{2s}{t^2}$$

calculate the acceleration of gravity for several trials as well as the percentage error in each case.

DATA

	TRIAL 1	2	3	4
Time for 10 meter stick swings (sec) 10 T =	16.4	16.9	16.6	16.9
Period of meter stick (sec) T=	1.64	1.69	1.66	1.69
Distance of fall, S (m)	.817	.898	.851	.894
One-quarter period, t (sec) = $t = T/4$	.410	.422	.415	.422
Acceleration due to gravity (m/sec²) $g = 2s/t^2$	9.7	10.0	9.9	10.0
Percent error E =	1.0%	2.0%	1.0%	2.0%

EXPERIMENT 13. ACCELERATION OF FREE FALL

NAME CLASS HOUR

RELATED QUESTIONS AND ACTIVITIES

1. When the ball and the meter st[illegible]e, the mark left on the white paper is a vertical line approximate[illegible] cm long, rather than a dot. In measuring the distance that the ball fell, should you measure to the top of this line, the middle or the bottom?

To the top of the vertical line.

Reason. *The initial contact between the ball and the meter stick should occur when the stick is at the vertical position. As the stick continues its swing, the ball slides downward along the carbon pap[illegible] leaving a short line.*

2. Fasten a heavy clamp to the bottom [illegible] the meter stick to add more mass at its lower end. Predict how th[illegible] will affect the period of the swinging meter stick.

Most students predict that the pe[illegible]od will not change.

Measure the period and record your results.

The period increases.

3. With a heavy clamp attached to the bottom of the meter stick, repeat the initial procedure to measure the acceleration of gravity. Predict how this will affect the value of g that you will get. Try the experiment and compare your results with the predictions.

Attaching a heavy clamp to the lower end of the meter stick does not affect the acceleration of the ball. The period of the meter stick will be a bit longer, so the ball will fall for a longer time before colliding with the stick, but it will also fall through a longer distance. These two effects should cancel each other.

4. In this experiment we did not account for the friction of the cord against the upper support nor did we account for the air resistance as the meter stick swings. Would these two errors add together to increase the total error or would they tend to cancel each other out?

The two errors would add together.

Reason. *Air friction on the meter stick tends to increase the period of its swing, and friction between the cord and the nail tends to decrease the distance of fall before collision. The combined effects tend to give us a value of g less than the standard 9.8 m/sec².*

This problem of determining the acceleration of gravity using a phonograph turntable and suspended balls is too difficult for the average high school student. It is presented as a challenge for those few students who are highly motivated in physics and have a facility for handling simple algebra.

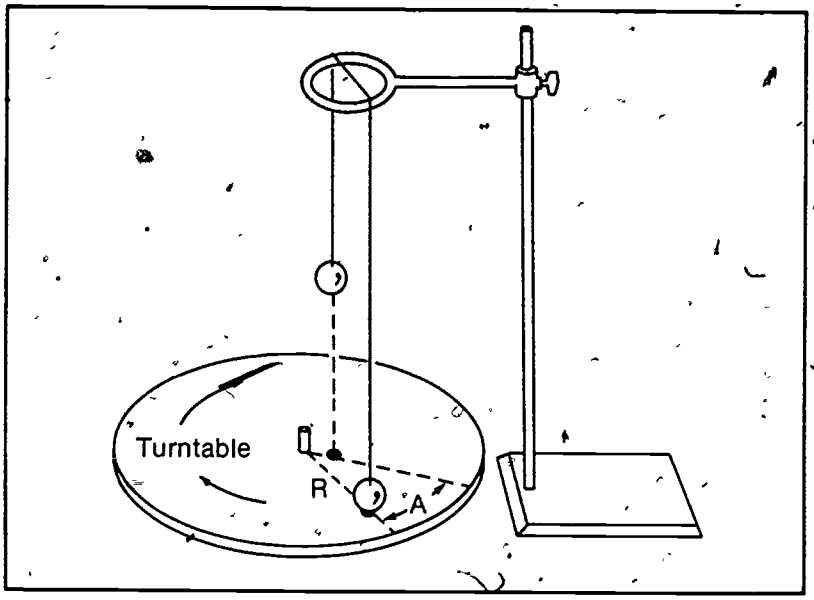

The ball just above the turntable touches the turntable at time zero. The other ball hits it a time t later. Since it falls from rest a distance s = ½gt², then g = 2s/t². If the turntable is rotating at 33 1/3 revolutions per minute, the time for one full revolution is 1.8 sec. If the angular distance in degrees between the two carbon marks is A, the turntable rotates a fraction A/360° of a circle while the second ball is falling, so the time t is (1.8 sec) (A/360°). Therefore, g in terms of A is

$$g = 2s/(1.8\ \text{sec})^2\ (A/360^\circ)^2.$$

5. If you enjoy math and wish to try an experiment a bit more difficult than the others, suspend two balls over the same radius, R, of a phonograph turntable. One ball should be just above the turntable and the other should be at a known distance above this level. While the phonograph turntable is rotating at a known speed, burn the string between the two balls so they start falling simultaneously from rest. The point of impact of each of the balls will be recorded by a mark made by a piece of carbon paper over a sheet of white paper on the turntable. Derive a formula which will give the acceleration of gravity in terms of the angular distance, A, between the two marks on the paper. Using the formula that you derived, set up the apparatus and calculate the acceleration of gravity from the data you record.

Formula *$g = 2s/(1.8\ \text{sec})^2\ (A/360^\circ)^2$ where A = angular distance in degrees, S = initial distance of higher ball above table.*

where A = angular distance in degrees, s = initial distance of

Results *Since this is an open-ended experiment for the unusual student, no sample data is given. However, students can be challenged to develop their own refinements and see how close they can get to the accepted value of g by varying the heights of the balls and the rotation speed of the turntable. (Note that if the rotation speed is changed, the time for one revolution will no longer be 1.8 sec; if one of the balls is not directly above the turntable, the time interval between the two impacts becomes $\sqrt{2s_1/g}$ - $\sqrt{2s_2/g}$.*

EXPERIMENT • **MASS AND WEIGHT**

14

NAME _____ CLASS HOUR _____

LAB PARTNERS. _____ DATE. _____

PURPOSE

Every object has a mass that is related to the difficulty in changing its motion. In this experiment, we shall measure the mass and weight of several objects and see how they are related.

It is recommended that this experiment be done with the students working in pairs. Inertial balances may be assembled with two blocks of wood and two hacksaw blades or they may be purchased inexpensively from scientific supply companies.

PROCEDURE

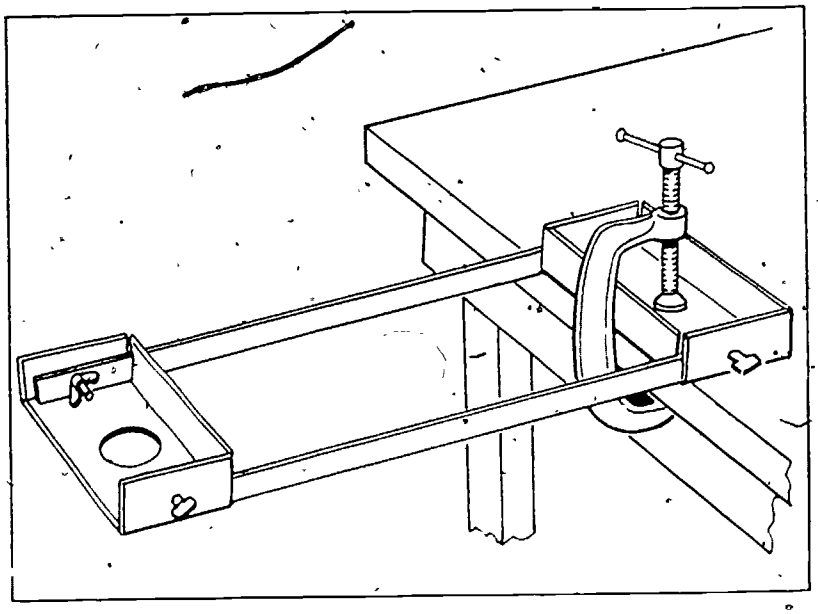

APPARATUS PREPARATION

1 inertial balance
3 or 4 C clamps of mass roughly 100 g each
clamp to secure balance to table
spring scale to weigh C clamps
watch with sweep second hand

1. Clamp an inertial balance to the edge of the laboratory table, as shown in the diagram.

2. Displace the end of the balance to one side and release it so that it vibrates horizontally. Record the number of complete vibrations (back and forth) during a 30-sec interval and calculate the period of the balance (the time required for 1 complete vibration).

3. Increase the mass at the end of the balance by attaching several C clamps, one at a time, and record the number of complete vibrations during a 30-sec interval as each clamp is attached. Any objects may be used in place of C clamps provided that they can be firmly attached to the end of the balance and their masses are identical. The center of each object must be the same distance from the end of the balance. Calculate the period of the balance for each number of C clamps.

See sample graph on next page.

4. Plot a graph of the period of the balance *vs* the number of C clamps or other objects that were attached. Draw a smooth curve between the points.

SUGGESTIONS AND TECHNIQUES

1. When the inertial balance is in rapid oscillation, it may help to hold a stiff piece of paper near the side of the balance so that a click is heard with each vibration.

2. Some inertial balances have excessive friction and will not sustain vibrations for 30 seconds. If this is the case, the period of the balance may be calculated using a smaller interval of time, although the precision will probably not be as great.

3. Counting the number of vibrations in a set time interval, rather than timing a set number of vibrations, minimizes the error that can arise when miscounting very rapid vibrations. For rapid vibrations, the chance of miscounting is greater but so is the total number of vibrations, so the percentage counting error is about the same as for slow vibrations.

5. Remove the clamps and tape a stone or another object of unknown mass to the end of the balance. Operate the inertial balance and determine its period with the object of unknown mass attached. Find the point on your graph curve that corresponds to this value for the period. The value for the number of C clamps associated with this point tells you the mass of the object in units of C clamps.

6. Weigh each of the C clamps on a spring scale. Find the average weight of a clamp. Calculate the weight of the unknown by assuming that the weight is proportional to the mass.

7. Weigh the unknown on the spring scale. Determine the percentage error between the measured weight and the weight that was calculated using the inertial balance.

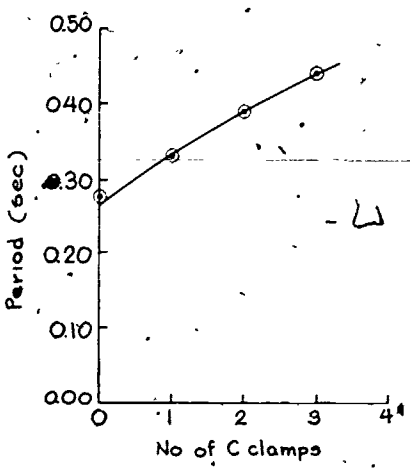

According to the graph, the period of .34 seconds corresponds to 1.2 "C" clamps. Thus the unknown would be 1 "C" clamp within experimental error.

DATA

TRIAL	Number of C clamps attached to inertial balance	Number of vibrations in 30 sec	Period (sec)
1	0	106	0.28
2	1	90	0.33
3	2	77	0.39
4	3	68	0.44
5	unknown	88	0.34
6			
7			
8.			

EXPERIMENT 14. MASS AND WEIGHT

NAME CLASS HOUR

	TRIAL						
	1	2	3	4	5	6	Average
Weight of C clamp (N)	0.90	0.90	0.90				0.90

Mass of unknown (in number of C clamps) M = 1.2 C clamps

Calculated weight of unknown (N) W (calc) = 1.1 N

Measured weight of unknown (N) W (meas) = 0.88 N

Percent error E = 20 %

RELATED QUESTIONS AND ACTIVITIES

1. How is the period of the inertial balance affected as additional masses are attached to the end?

As additional masses are added, the period of the balance increases.

2. Predict the manner in which the period of the balance would be affected if the balance were operated in a vertical rather than a horizontal position.

If the balance is clamped to a vertical support so that the edges are horizontal but the end vibrates up and down, the constant pull of gravity is in the same direction as the restoring force half the time and in the opposite direction the rest of the time. The period should not be affected.

Try it and record the results.

In the horizontal position with one clamp attached, the period of oscillation was 0.33 sec. The period of vertical oscillation with one clamp attached was identical.

3. Predict how the period would be affected if a strong magnet were held beneath the platform while the balance was operated in its normal horizontal position with one C clamp or other metal weight attached.

A strong magnet should decrease the period of oscillation because the restoring force of the magnet is being added to the restoring force of the spring.

Try it and record your results. *With a strong alnico magnet held below the inertial balance and with one clamp attached to the end, the period was reduced from 0.33 sec to 0.31 sec.*

EXPERIMENT 15 NEWTON'S SECOND LAW

NAME CLASS HOUR

LAB PARTNERS DATE

PURPOSE

According to Newton's laws of motion, the velocity of an object can change only when a force is acting on the object. In this experiment, the relationships between the force that is applied, the mass of the object, and the resulting acceleration will be experimentally established.

Students working in groups of two or three should be able to do both parts of this experiment during a typical laboratory session and still have some time left for plotting graphs. In every class, there will be some students who are dissatisfied with their results using a stop watch and a dynamics cart. If there is extra time, it is a good idea to set up at least one linear air track in the lab.

PROCEDURE

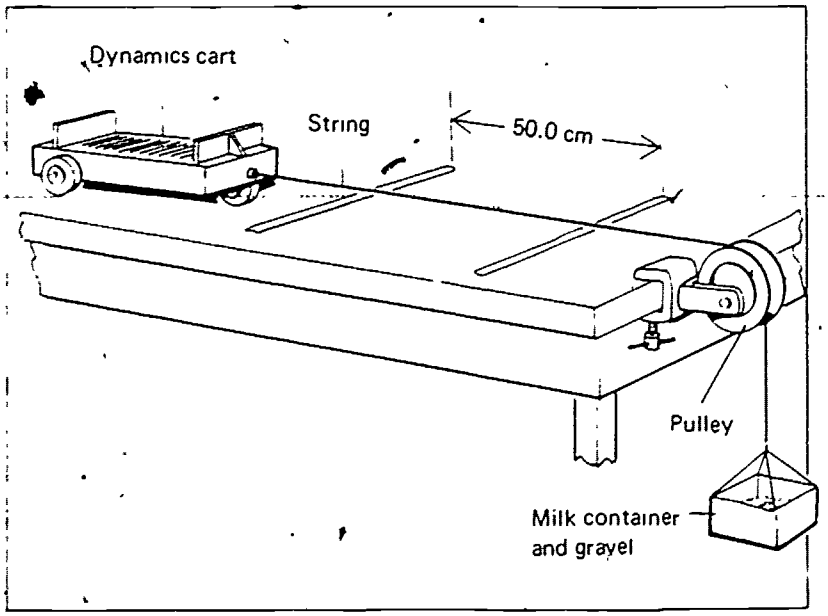

1. Place a dynamics cart on a smooth horizontal table and attach a paper cup or milk container to it, as shown in the diagram

2. To compensate for friction, place just enough sand or gravel in the milk container so that the dynamics cart will move at a constant velocity once it is started. Using a good balance, measure the total mass of the cart, milk container, and gravel and record in the data chart.

3. Place two pieces of tape on the table to mark off a distance of 50.0 cm

4. Apply an accelerating force of 0.05 N by adding 5.0 grams of sand or gravel to the container and record the time it takes the cart to travel between the pieces of tape, starting from rest.

5. Calculate the acceleration of the cart, using the equation

$$a = \frac{2S}{t^2}$$

APPARATUS PREPARATION

- *1 pulley, clamped to table*
- *1 dynamics cart*
- *1 stop watch*
- *1 length of string, about 100 cm long*
- *2 pieces of masking tape, about 25 cm each, for indicating a starting and finishing line*
- *1 milk container or paper cup for holding sand or gravel (or standard masses)*
- *1 set of standard masses or 1 cup of sand or gravel*
- *1 centrally located triple beam balance for the entire class*
- *2 bricks or masses of about 1 kilogram each for increasing mass of cart*

SUGGESTIONS AND TECHNIQUES

1. If desired, known standard masses may be substituted for the milk container and sand and gravel. These small masses are very expensive, however, and are not likely to improve the result of this experiment.

2. To keep the mass of the system constant while determining the effect of increased accelerating forces, it is suggested that a container holding some sand or gravel be placed on the cart. Transferring some of this material from the cart to the suspended milk container will make it possible to increase the accelerating force without changing the mass of the system.

See sample graph on this page.

6. Repeat the above procedure several more times, increasing the accelerating force by 0.05 N or 0.10 N each time by adding sand to the milk container.

7. Plot a graph of acceleration vs. force, using your data.

See sample graph on next page

8. With a constant accelerating force provided by the gravel in the milk container, vary the mass of the accelerating system (cart, container, and gravel) by adding known masses, about 1 kilogram at a time, strapped to the top of the cart. For each trial record the mass of the system and the resulting acceleration. Make a graph showing how the acceleration varies with increased mass.

DATA

Variation of Acceleration with Force (Constant Mass)

Distance moved, S = 50 cm

Mass of cart, container, and gravel m = 1400 g

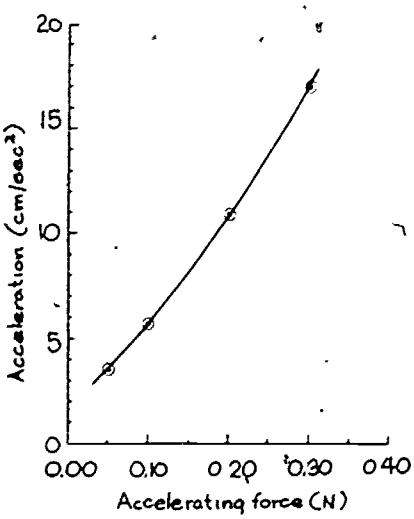

TRIAL	Force (N)	Time, t (sec)	Acceleration, $a = 2s/t^2$ (cm/sec²)
1	0.05	5.4	3.5
2	0.10	4.2	5.7
3	0.20	3.0	11
4	0.30	2.4	17
5			

EXPERIMENT 15. NEWTON'S SECOND LAW

NAME CLASS HOUR

Variation of Acceleration with Mass (Constant Force)

Distance moved, S = 50 cm Accelerating force F = 0.40 N

TRIAL	Mass of cart, container, gravel, and added mass (g)	Time, t (sec)	Acceleration, $a = 2s/t^2$ (cm/sec²)
1	1400	2.0	25
2	2400	4.0	6.3
3	3400	8.0	1.7
4			
5			

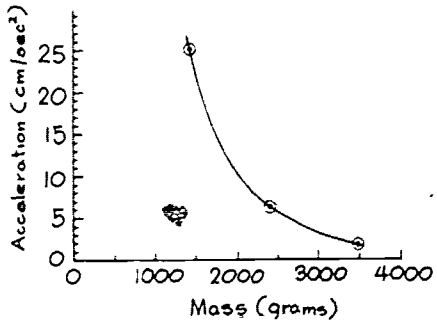

RELATED QUESTIONS AND SUGGESTED ACTIVITIES

1. According to the text book, the acceleration of an object is directional proportional to the force that is applied. How does your graph of acceleration *vs* force indicate this relationship?

The graph is not a straight line.

Systematic errors caused by friction in the wheels, angular acceleration of the wheels, and difficulty in timing short intervals with a stop watch are likely to cause variations from the theoretical direct proportionality.

2 According to your text book, the acceleration is inversely proportional to the mass of an object providing the accelerating force is constant. How does your graph of acceleration vs. mass show this relationship?

The curved line of the graph indicates an inverse relationship, but increasing wheel friction as more mass is added to the cart will cause variations from theoretical expectations.

An air track with automatic timing mechanisms (such as photocell gates) will give results that are very close to the theoretical relationships. This apparatus is quite expensive, however, and takes more time to set up and operate than is usually available in a typical lab session.

3. It is difficult to verify Newton's second law experimentally using a dynamics cart because the applied force not only accelerates the cart but also makes the wheels roll faster and faster. If your school has a linear air track in which a glider resting on a cushion of air moves almost frictionlessly over a rigid metal track, repeat the above experiment, recording your data and analysis on the reverse side of this sheet.

EXPERIMENT • TRAJECTORIES

16

NAME. CLASS HOUR

LAB PARTNERS DATE

PURPOSE

The path, or trajectory, of an object which is moving horizontally as it rises or falls freely is a parabola. In this experiment the trajectory of a ball which rolls off a ramp will be studied.

It is recommended that this experiment be done with students working in pairs, each student should gather individual data with the help of his partner The apparatus is available from suppliers of Project Physics equipment and comes complete with plotting board, impact board, steel ball, and channel incline.

APPARATUS PREPARATION

- *1 set of trajectory apparatus*
- *1 piece of carbon paper (2 cm by 20 cm) for each student*
- *1 piece of tracing paper (same size as the carbon paper) for each student*

PROCEDURE

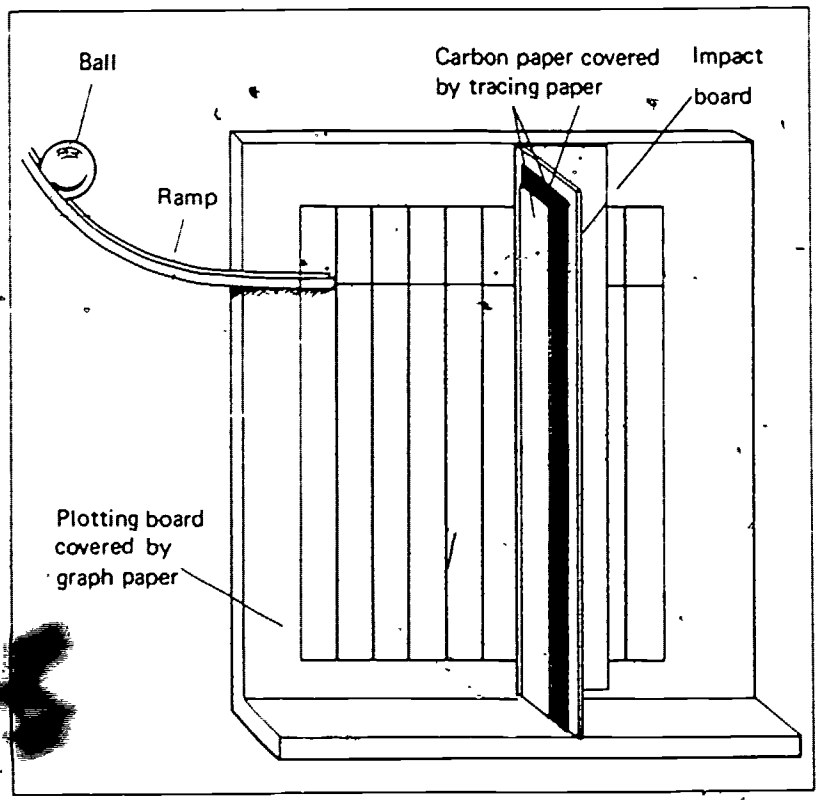

1 Align a piece of graph paper so that the long edges are vertical, and rule a horizontal line near the top of the paper Starting at the left edge, rule a series of vertical lines 2 cm apart.

2. Adjust the slope of the ramp on the trajectory apparatus so that a ball will be ejected horizontally upon reaching the bottom. Use a carpenters level if one is available.

3 Mount the graph paper on a plotting board, making sure that the intersection of the first vertical line and the horizontal line on the graph paper is aligned with the bottom of the ramp

4. Allow the ball to roll down the ramp and fall in front of the graph paper. Start the ball at different heights along the ramp until one is found which will cause the ball to land at the lower right hand

SUGGESTIONS AND TECHNIQUES

1. Practice releasing the ball in exactly the same manner for each trial. You will find that releases are more consistent if the ball is held with a ruler instead of with the fingers prior to release.

2. For improved data analysis, allow the ball to strike the impact board several times at each position. The differences in position of the impact points at each location can be measured to give a quantitative indication of the error.

3. Clamp the apparatus or hold it firmly to be sure that the impact board does not move while it is being struck by the ball.

corner of the graph paper. Hold the ball on the ramp at this position and tape a small block of wood to the ramp at the top of the ball so that the same position may be easily found for future releases.

5. Cover the face of the impact board with a strip of carbon paper, carbon side out, and then cover the carbon paper with a sheet of transparent tracing paper.

6. Place the impact board on the lab table so that the tracing paper touches the bottom of the ramp.

7. Roll a ball down the ramp and allow it to strike the impact board and make a small mark on the tracing paper.

8. Adjust the graph paper on the plotting board so that the intersection of the first vertical line and the horizontal line at the upper left corner coincides with the mark on the impact board. Mark the graph paper at this spot.

9. Move the impact board to the right until the tracing paper is aligned with the second vertical line on the graph paper. Starting the ball at the predetermined position on the ramp, allow the ball to roll down and strike the impact board On the second vertical line of the graph paper, mark the height of the impact point. Roll the ball down the ramp for several more trials, moving the impact board to each of the remaining vertical lines on the graph paper and mark the position of impact for each location on the graph paper.

10. With the impact board out of the way, allow the ball to roll down the ramp and check that it passes each of the marked points on the graph paper as it falls in front of the plotting board.

11. Remove the graph paper from the plotting board and draw a smooth curve connecting the points to show the trajectory.

DATA ANALYSIS

1. Remove the graph paper from the plotting board, and starting from the left, number the vertical lines consecutively

2. On each of the vertical lines, measure the distance between the level of release and point of impact to the nearest thousandth of a meter and record these values on the chart that follows.

EXPERIMENT 16. TRAJECTORIES

NAME CLASS HOUR

3. Using the equation:

$$S = \frac{1}{2}gt^2$$

calculate the time of fall for each of the distances recorded in the chart. Enter these values in the next column of the chart.

4. For each of the impact points on the graph paper, measure the horizontal distance that the ball has traveled after launching and record these values on the data chart. Calculate the average horizontal speed at which the ball traveled to reach each of the impact points by dividing the horizontal distance by the time. Enter these values in the last column of the data chart.

Vertical distance (m) S(v) =	Time (sec) t =	Horizontal distance (m) S(h) =	Average horizontal speed (m/sec) v =
0.000	0.000	0.000	
0.03	0.025	0.020	0.80
0.010	0.045	0.040	0.89
0.021	0.066	0.060	0.91
0.037	0.087	0.080	0.92
0.060	0.111	0.100	0.90
0.085	0.133	0.120	0.90
0.116	0.154	0.140	0.91
0.152	0.176	0.160	0.91
0.188	0.196	0.180	0.92

Sample Trajectory Graph

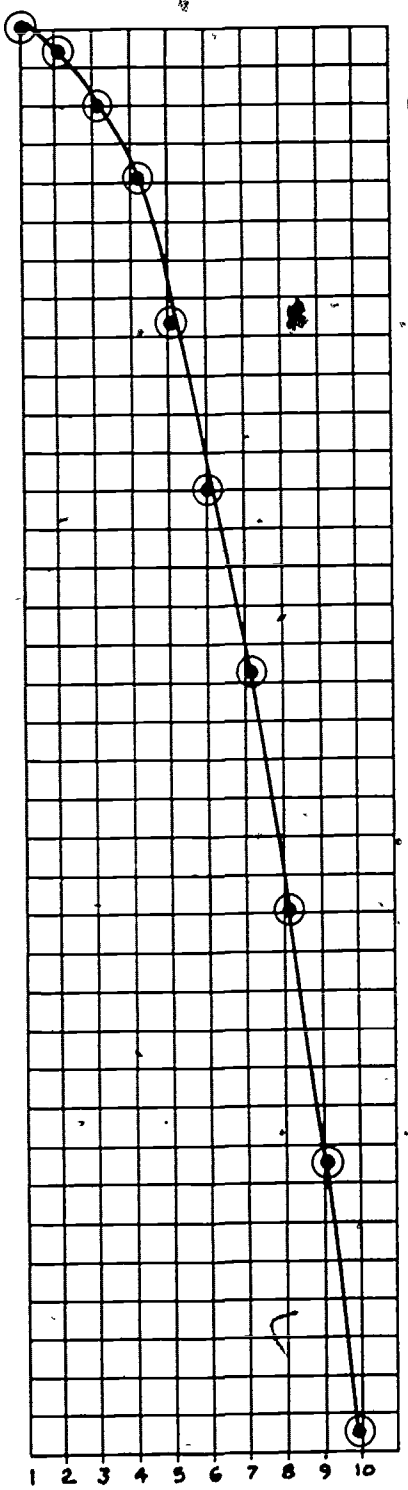

RELATED QUESTIONS AND ACTIVITIES

1. Replace the graph paper on the plotting board and check that the ball follows the same trajectory when released from the predetermined point. Move the entire apparatus to the edge of the table so that the ball could continue its fall until it reached the floor. Measure the distance from the bottom of the ramp to the floor and calculate the time that would be required for the ball to fall this distance using the equation

$$S = \frac{1}{2}gt^2.$$

Using this time and the horizontal speed which was calculated earlier, predict the point of impact where the ball will hit the floor. Try this experiment and calculate your error in predicting the point of impact.

X(i) = *Assuming that the bottom of the ramp is 1.00 m above the floor, the time required to fall to the floor (using $S = \frac{1}{2}gt^2$) is 0.45 sec. Traveling at an average horizontal speed of 0.92 m/sec, in 0.45 sec the ball would cover a horizontal distance of 0.41 m.*

2. If the apparatus were placed at the edge of a cliff, 1000 meters high, and the ball were released on the ramp on a windless day, why would it be difficult to predict the point of impact of the ball at the base of the cliff?

When the ball falls a great distance, rotation will cause its path to become curved and air resistance will have an appreciable effect on the travel time as well as on the uniformity of the horizontal speed.

3. Place a penny at the edge of the table and shoot a nickel along the table so that it hits the penny and they both fall off the edge. The penny flies out farther than the nickel but both will hit the ground at almost the same instant. Why?

Since both coins are shot off the edge of the table with a vertical speed of zero, both take the same amount of time to reach the floor. The greater horizontal speed of the penny causes it to cover a greater horizontal distance than the nickel during that time.

4. Make a strobe photograph of the ball falling in the trajectory apparatus using one of the techniques given in Experiment 7. From measurements on the photograph, calculate the horizontal speed of the ball and compare it with that determined in the data chart on the previous page.

Refer to Experiment 7 for techniques and suggestions for making strobe photographs.

EXPERIMENT • CENTRIPETAL FORCE

17

NAME: CLASS HOUR.

LAB PARTNERS. DATE

PURPOSE

A force which continuously changes the direction of motion of an object so that it moves in a circle is known as a centripetal force. In this experiment the relationships among the mass, centripetal force, speed, and radius of curvature will be investigated.

This experiment should be done with students working in groups of three. One student operates the apparatus, keeping the radius constant as the stopper is whirled in a horizontal circle. A second student counts revolutions, while a third watches the time

PROCEDURE

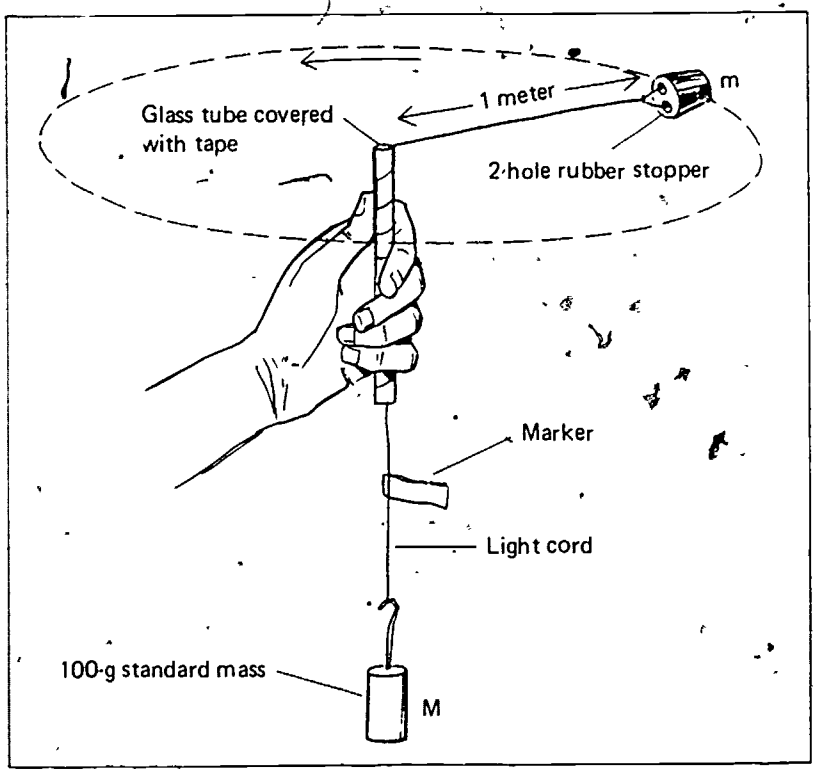

APPARATUS PREPARATION

1 meter stick
1 length of fishing line, approximately 1.5 m long
1 piece of glass tubing, 10 cm long, firepolished at ends and covered with tape
3 or 4 two-hole stoppers of different mass
1 100-g standard mass
2 200-g standard masses
1 piece of cellulose or masking tape, 5 cm long, or 1 paper clip
1 stop watch or clock with sweep second hand

1. Pass a strong light cord through a 10-centimeter length of glass tubing. At one end of the cord, fasten a 100-g standard mass. At the other end, tie a 2-hole rubber stopper as shown in the diagram. Hold the bottom of the cord in one hand and manipulate the glass tubing with the other so that the rubber stopper revolves overhead in horizontal circles approximately 1 meter in radius. (See Suggestions and Techniques.) When this has been mastered, release the standard mass so that it is free to move up or down. In this mode of operation

SUGGESTIONS AND TECHNIQUES

1. To prevent the cord from being cut by the edge of the glass tubing, the tubing should be fire polished by heating it in a bunsen burner flame until the rough edge has softened into a smooth surface. For safety, the glass tubing should be covered with some tape.

2. The radius of the string will be difficult to measure while the stopper is moving. One way of measuring it is to measure the string before or after the actual trial. A small marker such as a paper clip or a piece of tape attached to the string about 2 cm below the glass tubing will be helpful in maintaining a constant radius while the stopper is being revolved.

3. When measuring the radius, be sure to measure the distance from the center of the stopper to the center of the top opening of the glass tube.

4. To keep the centripetal force from varying during the experiment, it will be necessary to practice keeping the rubber stopper revolving in a horizontal circle. If the circle is not horizontal, a changing centripetal force will be observed during each revolution.

5. The values of the known masses are usually given in grams. Remember to convert these values to kilograms before multiplying by g to get the force in newtons.

the weight of the hanging mass supplies the centripetal force which forces the rubber stopper to move in a circle.

2. Find the speed of the rubber stopper by allowing the stopper to whirl in a horizontal circle of constant radius (r) for twenty revolutions while measuring the time. The speed is equal to the distance divided by the time, where the distance is $2\pi r$ for each revolution.

3. Increase the centripetal force by adding known masses to supply additional centripetal force. As each known mass is added, record the centripetal force and the resulting speed of the rubber stopper. Be sure that the radius of the circle in which the stopper moves does not change from trial to trial. Plot a graph of centripetal force vs. speed.

See sample graph on opposite page. Check that students realize that force is zero when speed is zero.

4. Keeping the centripetal force constant, whirl the stopper in horizontal circles of different radii. For each radius, calculate the speed at which the stopper moves. Plot a graph of speed vs. radius

See sample graph on opposite page. Check that students realize that speed is zero when radius is zero.

5. Keeping the radius and centripetal force constant, vary the mass that revolves by substituting different size rubber stoppers. With each substitution, you will find that the speed changes. Plot a graph of the speed vs. mass.

See sample graph near the corresponding data table.

EXPERIMENT 17. CENTRIPETAL FORCE

NAME CLASS HOUR

Varying the Centripetal Force

Radius of circle (= r) r = 0.50 meter(s)

Mass of rubber stopper m(s) 0.031 kilogram(s)

TRIAL	M Hanging mass, (kg)	F(c) Centripetal force, Mg (N)	n, No of revolutions,	Total distance, $d = 2\pi rn$ (m)	Time, t (sec)	Speed, $d = s/t$ (m/sec)
1	0.100	0.98	20	63	15.8	4.0
2	0.200	2.0	20	63	11.0	5.7
3	0.300	2.9	20	63	11.0	5.7
4	0.400	3.9	20	63	7.8	81
5						

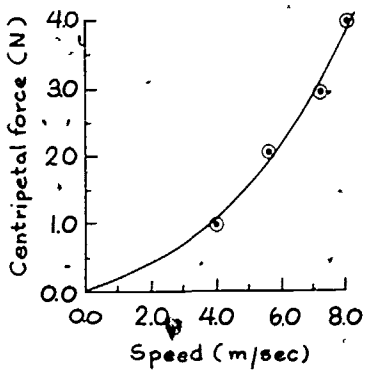

Varying the Radius

Mass of rubber stopper m(s) = 0.016 kilogram(s)

Centripetal force (= weight of hanging mass) F(c) = 0.98 newton(s)

TRIAL	Radius, r (m)	No. of revolutions, n	Total distance, $d = 2\pi rn$ (m)	Time, t (sec)	Speed, $v = d/t$ (m/sec)
1	0.60	10	38	6.1	6.2
2	0.70	10	44	6.7	6.6
3	0.80	10	50	7.2	6.9
4	0.90	10	57	7.6	7.5
5					

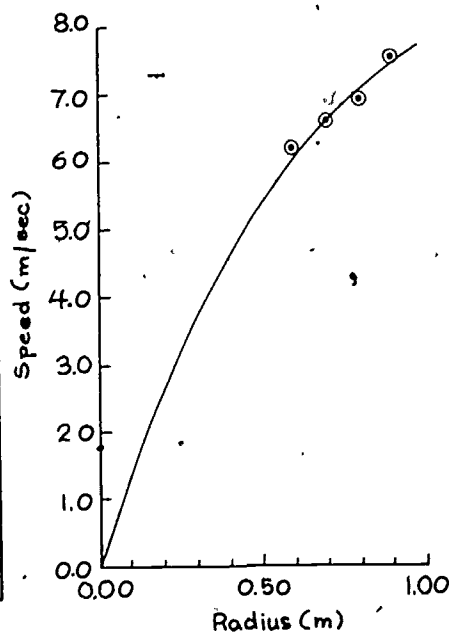

Varying the Mass of the Rubber Stopper

Radius of circle (=r) r = 1.00 meter(s)

Centripetal force (=weight of hanging mass) F(c)= 2.0 newton(s)

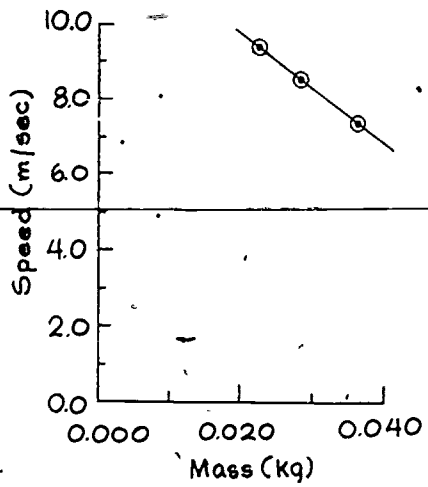

TRIAL	m(s) Mass of stopper (kg)	No. of revolutions n	Total distance, $d = 2\pi rn$ (m)	Time, t (sec)	Speed, $v = d/t$ (m/sec)
1	0.022	10	62.8	6.7	9.4
2	0.028	10	62.8	7.4	8.5
3	0.036	10	62.8	8.5	7.4
4					
5					

RELATED QUESTIONS AND ACTIVITIES

1. Examine the graphs that have been prepared and summarize the relationships that you have found between:

a. speed and centripetal force. *The centripetal force increases with the speed but is not directly proportional to it (graph is not a straight line.)*

b. speed and radius. *The speed increases with the radius but is not directly proportional to it.*

c. speed and mass of revolving object. *The speed decreases as the mass increases*

(This relation is not linear, although this may not be apparent from the graph. The speed goes as $1/\sqrt{m}$.)

2. Select a rubber stopper of unknown mass. Measure the speed as it is whirled in a horizontal circle of the same radius and with the same centripetal force as in Step 5 of the Procedure. Using your speed vs. mass graph, find the mass of the stopper. Check your results by using a balance to find the mass of the stopper.

Mass from graph m(g) = 0.030 kg

Mass from balance m(b) 0.031 kg

Percent error E = 3%

EXPERIMENT 17. CENTRIPETAL FORCE

NAME CLASS HOUR

3. When a rubber stopper is resting on a rotating phonograph turntable, the friction between the stopper and the turntable provides the centripetal force which keeps the stopper from skidding off. Measure this force by placing the stopper on a stationary turntable and pulling it with a spring scale until it just starts to slide. A more precise technique is to attach a light string to the stopper, pass the string over a pulley, and then hang known weights on the other end of the string until the stopper begins to slide. Now place the stopper near the center of the turntable and turn the motor on so it turns at a known speed. If the stopper does not slide, stop the turntable, and reposition the stopper a little closer to the rim until the minimum radius is found at which the stopper begins to slide. Using the equation

$$F = mv^2/r$$

calculate the centripetal force and compare this with the frictional force which was found earlier.

In a typical trial, a stopper of mass 0.036 kg was placed on a turntable with a record revolving at 45 rpm. The stopper began to slide when it was 10 cm (0.10 m) from the center of the turntable. Calculations indicate a centripetal force of 0.07 N compared with a spring scale reading of 0.1 N

The main difficulty that students are likely to encounter is in determining the speed (v) of the stopper as it travels in a circle on the turntable. Using a standard phonograph turntable, the speed can be calculated by taking the distance for one revolution ($2\pi r$) and dividing it by the time t for one revolution. At 78 rpm, t = 0.77 sec, at 45 rpm, t = 1.33 sec, and at 33.3 rpm, t = 1.80 sec.

EXPERIMENT • **NEWTON'S THIRD LAW**

18

NAME CLASS HOUR

LAB PARTNERS DATE

PURPOSE

The consequences of Newton's third law of motion may be observed when two objects fly apart in opposite directions. You will perform a controlled explosion and compare the change of momentum of each object.

This experiment has been successful with students working alone or with as many as four in a group. Best results have been found with students working in pairs.

APPARATUS PREPARATION

- *2 dynamic carts (heavy carts with small light wheels are preferable)*
- *2 or more weights to attach to carts*
- *2 rubber bands to attach weights to carts*
- *10 lengths of short string, each 10 cm*
- *1 length of long string, about 1 m*
- *2 sheets of carbon paper*
- *2 sheets of white paper*
- *tape to fasten paper to lab table*
- *matches to burn string*
- *1 meter stick*
- *1 triple beam balance*

PROCEDURE

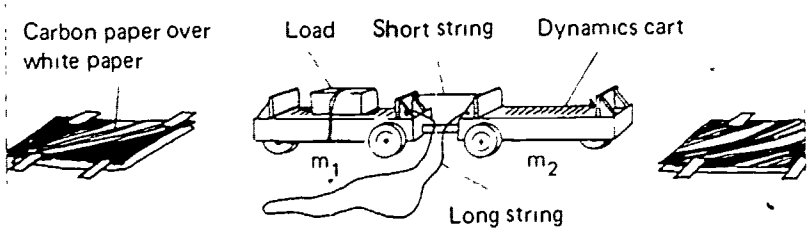

In this experiment, two dynamics carts are placed on a table as shown in the diagram. Their spring-operated plungers are compressed and held in this position with a short string. The string is burned, allowing the carts to fly apart. The change of momentum (mass times change in velocity) of each of the carts is determined. To avoid the necessity of using a timer, a long string is connected between the two carts so they will both stop at the same instant. Since the time of travel for each of the carts is identical, and they travel at approximately constant speed after they separate, their relative speeds may be determined simply by measuring the distance each moves. Proceed as follows:

1 Measure the mass of each of the carts using a triple beam balance and record in the data chart.

2 Tie the two carts together with a short string and with a long string (If the plungers can be cocked, do not cock them.)

3 Burn the short string and measure the distance that each cart moves until it comes to the end of the long string. For help in making this measurement, refer to the Suggestions and Techniques section Record the values in the data chart.

SUGGESTIONS AND TECHNIQUES

1. To measure the precise distance that a cart travels, mark the point where one of the wheels touches the table before the explosion. Near the position where the cart will stop, place a piece of white paper covered by carbon paper, carbon side down. When the wheel rolls over the carbon paper it will make a track which shows the farthest distance that the wheel traveled before it was stopped. The distance between the starting point and the end of the carbon track can be measured to the nearest millimeter.

2. To obtain a clear impression of the wheel on the carbon paper, wrap a single strand of thin wire around the wheel and secure it with a small piece of tape. The thinner the wire, the greater will be the pressure on the carbon paper.

3. Discount the results of any trial in which the two carts do not fly apart in a straight line.

4 If momentum is conserved,

$$m_1v_1 = m_2v_2$$

or

$$\frac{m_1d_1}{t_1} \quad \frac{m_2d_2}{t_2} =$$

where m_1, m_2 are the masses of the left- and right-hand carts, respectively

v_1, v_2 are the respective speeds after separation

d_1, d_2 are the respective distances each cart moves

t_1, t_2 are the respective travel times of each cart

Since $t_1 = t_2$, then $m_1d_2 = m_2d_2$. Consequently, the mass ratio m_1/m_2 will be inversely proportional to the distance ratio:

$$\frac{m_1}{m_2} = \frac{d_2}{d_1}$$

Calculate the mass ratio and enter it on the data chart. Using your distance values, calculate the inverse distance ratio (d_2/d_1) and enter it in the data chart. Theoretically the inverse distance ratio should be exactly equal to the mass ratio, but they will be found to differ somewhat because of experimental conditions. Using the mass ratio as the standard, calculate the percent error and enter this value in the bottom row.

5. Change the mass ratio by adding a weight on the top of one of the carts and secure it firmly with a rubber band or string. Explode the carts and measure the distances. Enter the distance and mass data on the chart and calculate the percentage error.

6. Change the mass ratio several additional times, recording the data in the chart together with the percentage error in each case.

EXPERIMENT 18. NEWTON'S THIRD LAW

NAME CLASS HOUR

DATA

	TRIAL							
	1	2	3	4	5	6	7	8
Mass of left-hand cart, m_1 = (kg)	1.46	1.46	2.50	1.30	1.45			
Mass of right-hand cart, m_2 = (kg)	1.43	1.43	1.25	2.30	1.25			
m_1/m_2	1.02	1.02	2.00	0.565	1.16			
Distance left-hand cart moves, d_1 = (m)	0.612	0.640	0.506	1.36	0.718			
Distance right-hand cart moves, d_2 = (m)	0.665	0.669	0.925	0.840	0.876			
d_2/d_1	1.07	1.05	1.83	0.618	1.22			
Percent error E =	4.9	2.9	8.5	9.3	5.2			

RELATED QUESTIONS AND ACTIVITIES

1. Analyze the experimental errors that occurred in each of the trials. If all of the errors were in the same direction, it indicates that there may have been a systematic error in the equipment or experimental techniques. For example, one of the carts may have had more friction than the other. Identify and account for any such errors

Data above does not indicate any systematic errors.

2. If the spring-operated plungers are compressed more or are compressed less during successive trials, it will vary the amount of force that is pushing the two carts apart. In theory, how should this affect the relative distance that each cart travels?

The distances should not be affected at all. The force would affect the time of travel but this is not measured in this experiment.

Some differences will be observed from trial to trial because of random errors in measurement and technique.

Again, any differences in data are likely to be due to systematic or random errors rather than new discoveries in physics. Learning to recognize negative results might be more important than merely confirming known theory.

Prove your answer by setting up an experiment and recording the data below.

3. Immediately after the string has been burned, the force of the plunger pushes the two carts apart, causing them to accelerate until the plunger has been fully extended. For precise results, this short distance should not be counted in measuring the distances that the carts traveled after the explosion. Devise and try an improved technique that would take this factor into account for the experiment. Record your idea and the experimental results below.

Since the force on each plunger by the other is identical during the acceleration, the acceleration ratio of the two carts will be inversely proportional to the mass ratio. Thus, since the times for accelerated motion are identical, the distance ratio during the acceleration phase will be identical to the distance ratio after the forces cease to act. The instructions above are purposely vague to add interest to the experiment.

4. Repeat the experiment using a linear air track, if one is available. Because the gliders rest on a cushion of air, there is negligible friction and it is possible to obtain more precise results.

DATA:

A linear air track is one of the most useful pieces of apparatus for experimentation in the physics lab. Because there is little frictional resistance and no changes in angular momentum (due to rotating wheels), excellent results may be obtained. Students will soon find that apparatus with improved precision often presents additional problems, such as effects of air resistance and difficulties in making precise distance and time measurements, which did not appear when measurements were less precise.

EXPERIMENT 19 CONSERVATION OF ENERGY IN A PENDULUM

NAME _____ CLASS HOUR _____

LAB PARTNERS _____ DATE _____

PURPOSE

Mechanical energy may exist as potential (stored) energy or as kinetic (moving) energy. In this experiment conversions between these two forms of energy will be investigated.

Students working in groups of two seem to enjoy the challenge of this experiment.

ENERGY IN A PENDULUM

Displacing a pendulum to the side increases the gravitational potential energy of the earth-pendulum system by an amount given by the equation

$$PE = mgh$$

where:

PE is the potential energy

m is the mass of the pendulum

g is the acceleration of gravity (9.8 m/sec²)

h is the vertical height of the pendulum above its original position.

The potential energy is in joules if m is in kilograms, g is in m/sec², and h is in meters.

If the pendulum is displaced to the side and then released, it starts moving as it falls, and potential energy is converted to kinetic energy. The kinetic energy of the moving pendulum is given by the equation:

$$KE = \frac{1}{2}mv^2$$

where:

KE is the kinetic energy

m is the mass of the pendulum

v is the speed of the pendulum

APPARATUS PREPARATION

1 drilled brass ball or a standard mass of at least 200 g
1 length of a string at least 0.5 m long
1 ticker tape timer (Several types are available but the type illustrated here is highly recommended.)
1 meter stick
1 stop watch or watch with sweep second hand
approximately 8 m of ticker tape

SUGGESTIONS AND TECHNIQUES

1. Use a pendulum that is at least 0.5 meter long.

2. When measuring the distance between the pendulum bob and the top of the table, you may measure to any part of the pendulum bob, as long as the same part of the bob is used for each measurement.

3. To find the distance traveled in 10 dot intervals, measure the distance between the first and last of 11 dots on the tape.

4. You may wish to substitute a photographic strobe system for the ticker tape timer. Refer back to Experiment 7 on strobe techniques if necessary.

PROCEDURE

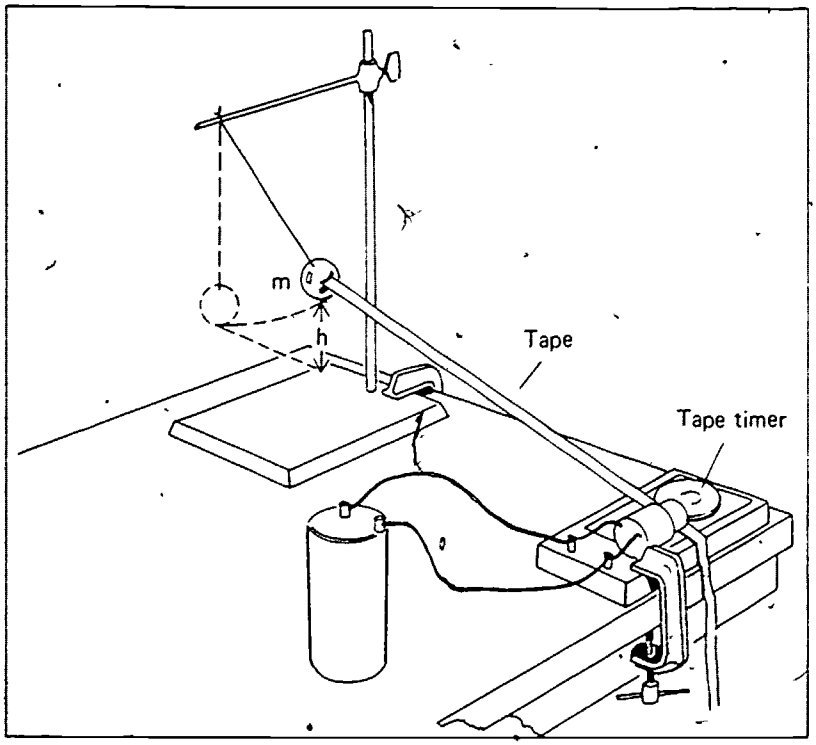

1. Measure the mass of a pendulum bob and record in the data chart.

2. Calculate the period of a ticker tape timer by pulling the tape through for 3 seconds and counting the number of dots that it makes.

3. Attach the end of the tape to the pendulum bob, as shown in the illustration. Measure the height that the pendulum bob is above the table when the pendulum is in its vertical equilibrium position. Displace the pendulum to one side until the vertical distance between the pendulum and the table is 0.020 meter higher than it was at the equilibrium position.

4. Start the timer and release the pendulum. When the pendulum has swung over to the other side and is just starting back down, stop the timer and examine the tape.

5. Calculate the maximum speed that the pendulum achieved during its swing by measuring the distance and calculating the time that is associated with the 10 longest consecutive dot intervals on

the paper. Record the distance and time for the 10 dot intervals and speed calculation in the data chart.

6. Using the speed calculated in the previous step, calculate the maximum kinetic energy of the pendulum using the relationship:

$$KE = \frac{1}{2}mv^2$$

7. Repeat the above procedure, drawing the pendulum bob back farther so that it is 0.40 meter higher above the table than it was in its equilibrium position. Repeat this for several more trials, increasing the vertical distance by 0.020 meter for each trial.

DATA

Timer Calibration

TRIAL	Total time (sec) T(t)	No. of dots *n*	Time interval per dot (sec) t
1	5.0	380	0.0132
2	5.0	387	0.0129
3	5.0	375	0.0133

Mass of pendulum bob, *m* = 1.00 kg

TRIAL	1	2	3	4	5	6
Height of bob *(h)* above equilibrium position (meters)	0.020	0.040	0.060	0.080	0.100	0.120
Potential energy PE = *mgh* (joules)	0.20	0.39	0.59	0.78	0.98	
Maximum distance traveled in 10 dot intervals (meters) S =	0.07	0.09	0.12	0.14	0.16	
Time corresponding to 10 dot intervals (sec) t =	0.13	0.13	0.13	0.13	0.13	
Maximum speed, (m/sec) v =	0.54	0.69	0.92	1.1	1.2	
Kinetic energy KE = $\frac{1}{2}mv^2$ (joules)	0.15	0.24	0.42	0.62	0.76	
Percent error E =	25%	33%	29%	21%	22%	

The fact that the kinetic energy is roughly 25% under the potential energy for each trial indicates that there is a systematic error in the sample data.

Re-analysis of the tapes by the student indicated that a 10-dot interval with his apparatus was much too great and that distances between dots varied considerably within this interval.

Recalculations using a time of .013 sec and the largest distance between two successive dots on the tape reduced the error to less than 5% for each trial

RELATED QUESTIONS

1. Examine your data chart and note the similarities between the values for the potential and kinetic energies in each case. Explain why these two values should be exactly equal, in theory.

The kinetic energies are less than the respective potential energies in each trial. According to the law of conservation of energies, without losses the energies should be always equal.

2. Calculate the percentage error for each trial by dividing the difference between the potential and kinetic energy by the potential energy and expressing it as a percentage. Enter this in the bottom row of the data chart.

Calculations:

EXPERIMENT • ENERGY CHANGES ON A TILTED AIR TRACK

20

NAME CLASS HOUR

LAB PARTNERS DATE

PURPOSE

The linear air track offers an excellent opportunity to observe changes of mechanical energy because any losses due to friction are negligible. Because theoretical calculations and actual observations can offer results which are practically identical, you can make a game out of how close you can predict the distance a glider will move on a tilted air track.

Students enjoy this experiment because the concepts are simple and it provides a real challenge to perform precise measurements.

Errors as high as 75% are likely unless good laboratory techniques are used.

PROCEDURE

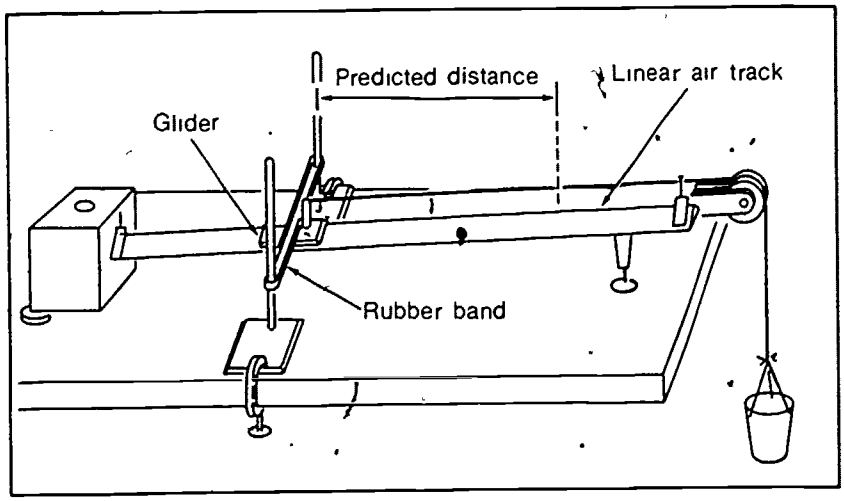

APPARATUS PREPARATION

linear air track
glider
rubber band launcher
long, thin rubber band (or chain of smaller ones)
meter stick

The air track illustrated here has an integral blower at the left end. Other models have separate blowers attached to the track by a hose. If the track does not already have a rubber band launcher, one can be improvised by using two ring stands as shown in the diagram.

1. With the air track horizontal, stretch a rubber band between two supports and allow a glider to rest against the rubber band in its equilibrium position, as shown in the diagram.

2. Calculate the potential energy that is stored in the rubber band when the glider is moved 1 centimeter from its equilibrium position into the rubber band. Because the forces exerted by a stretched rubber band are not linear with the stretching distance, incorrect conclusions will be reached if you try to find the rubber band energy by multiplying the total force by the total stretching distance. It will be necessary to find the energy in small steps and then add them to find the total potential energy necessary to stretch the rubber band 1.0 centimeter. To do this, follow the procedure given in steps 3 and 4 below.

3. Tie one end of a light cord to the glider and pass the other end over a pulley to a hanging paper cup. Place sand or gravel into the cup until the glider moves into the rubber band 0.1 centimeter from its equilibrium position. Weigh the cup and sand on a balance. Record the balance indication (which most likely will be in grams) in the data chart. Multiply grams x 0.001 for mass in kilograms.

4. Increase the amount of sand or gravel in the cup in steps that will stretch the rubber band up to 1.0 centimeters in 0.1 centimeter steps. For each step, record the weight of the cup and sand in the data table. These data will be used to calculate the stored potential energy when the data is analyzed later.

5. Raise one end of the track until it is sufficiently high so the glider will not reach the far end of the track after being shot out of the rubber band launcher stretched to 1 centimeter. Measure the angle of inclination of the track and record it on the data chart.

6. Predict the maximum distance that the glider will travel up the track after the rubber band is released. This can be done by equating the rubber band potential energy to the increase of gravitational potential energy (mgh, where m is the glider mass, g is the acceleration due to gravity, and h is the height the glider rises after the rubber band is released).

7. Try this several times, changing the distance that the rubber band is stretched or changing the mass of the glider.

DATA ANALYSIS

1. Calculate the potential energy in the rubber band when the glider stretches it 0.010 meter. One way to do this is to multiply the stretching force by 0.001 meter to find the work in joules to stretch the rubber band for the first millimeter. Record this in the last column of the data chart. For each succeeding millimeter stretch, multiply the increase in force by 0.001 meter to find the extra potential energy in joules.

When this has been done for all 10 millimeters, add the energies in the last column to find the total energy. You might wish to check this value by plotting stretching force vs. distance, on a graph and then finding the total energy by measuring the area under the graph line.

*** To save time, you might wish to enter only the data for columns A and B and then let your laboratory computer calculate the total rubber band energy from these data.

82

EXPERIMENT 20. ENERGY CHANGES ON A TILTED AIR TRACK

NAME CLASS HOUR

Distance (millimeters) d =	Distance (meters) s =	Mass of cup and sand in kilograms m =	Stretching force (newtons) F = mg	Potential Energy (Joules)
1	.001			
2	.002			
3	003			
4	.004			
5	.005			
6	.006			
7	.007			
8	.008			
9	.009			
10	.010			
			Total potential energy (Joules) PE =	

Typical sample data for this chart is not given because of the variations experienced with individual rubber bands and the non-linearity of their stretching forces. Look for repeatable data ±10% among several independent trials.

To avoid trigonometric calculations, have students calculate the increase in height and then refer to the actual air track to find the distance along the track which corresponds to this change in height.

The average student is likely to be off by about 50% in his prediction of the distance along the track that the glider will travel. These large errors provide a real opportunity for students to improve both their measuring techniques and the rubber band launcher. According to the sample data, it is obvious that the launcher does not conform to Hooke's Law of the ideal spring

2. Calculate the height to which the glider will rise using the relationship h = PE/mg, where PE is the energy stored in the rubber band when stretched 1 centimeter, m is the mass of the glider in kilograms and g is the acceleration of gravity (g = 9.8 m/sec). Enter this value in the chart below.

3. Calculate the distance along the track that the glider will cover before coming to a stop. Do this by dividing the height, h, by the sine of the angle of inclination, A. Enter this predicted distance in the chart.

4. Now, experiment to find the actual distance that the glider will move up the track after being launched from the rubber band stretched one centimeter. Enter this experimental value in the chart and calculate the percentage error between the predicted and the measured values.

	TRIAL				
	1	2	3	4	5
Inclined Angle A =	3°	5°	6°	7°	
Rubber band energy, *Fs* (joules)	0.0008	0.0046	0.0099	0.022	
Glider mass (kg) m =	0.250	0.250	0.250	0.250	
Predicted height rise (meters) h =	0.0003	0.0019	0.004	0.009	
Predicted distance (meters) d(P) =	0.054	0.14	0.35	0.76	
Actual distance meters d(A) =	0.037	0.12	0.25	0.46	
Percent error	46	17	40	65	

RELATED QUESTIONS AND ACTIVITIES

1 How would the motion of the glider change if the tilt of the air track were increased?

The increase in height would be the same but the distance along the track would be less.

EXPERIMENT 20. ENERGY CHANGES ON A TILTED TRACK

NAME CLASS HOUR

2. Describe the changes that take place in the kinetic energy of the glider from the time the rubber band is released until the glider returns to the original release position.

Upon release, the KE increases until the glider leaves the rubber band launcher As the glider continues up the track, its KE decreases, becoming zero when the glider stops momentarily at the highest point. As the glider returns, the KE increases until it reaches the rubber band, then decreases to zero as the glider stretches the rubber band.

3. Describe the changes in potential energy that take place from the time the rubber band is released until the glider returns to the original release position.

The PE of the rubber band system decreases upon release, and the gravitational PE increases as the glider goes up the track. During the return trip, the gravitational PE decreases, and the PE of the rubber band system increases when the glider reaches the rubber band and stretches it

4. If you are especially successful in making accurate predictions, record the specific techniques that you developed in stretching the rubber band, in measuring distances, or in releasing the stretched rubber band for consistent trials.

A compass (the kind used for making circles) was used as an aid in finding small differences in height along the tilted air track This helped detect differences as small as 1 mm

EXPERIMENT • SIMPLE HARMONIC MOTION ON A LINEAR AIR TRACK

21

NAME _____ CLASS HOUR _____

LAB PARTNERS _____ DATE _____

PURPOSE

If an object supported by springs is started in motion, it will move back and forth in a periodic motion called simple harmonic motion. The period of the motion depends upon the mass of the object and the constants of the springs that support it. In this experiment, we shall investigate the relationships between the mass, the spring constants, and the resulting period of the system.

It is suggested that students perform this experiment working in pairs. If there are not enough air tracks available for everyone in the class, permit some of the students to calibrate springs and others to do Part B of the experiment first. If at all possible, try to have every student assigned to an air track for at least part of the session.

PROCEDURE

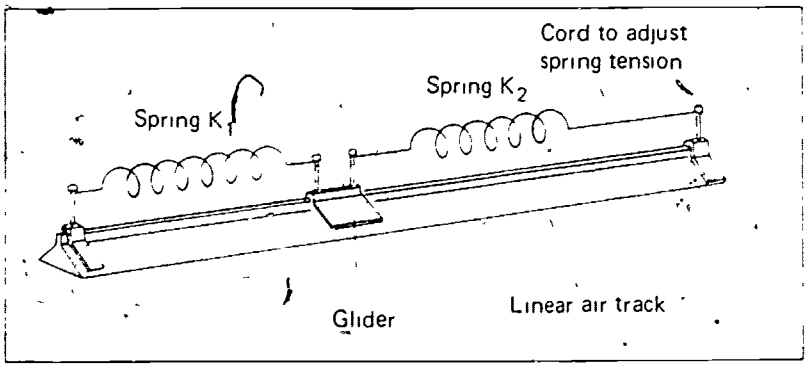

1 Measure the mass of a glider, place it on a level linear air track, and attach springs with known spring constants to each end of the glider as shown in the diagram. (If you do not know the spring constants, see Suggestions and Techniques)

2. With the apparatus arranged as shown in the diagram, displace the glider along the track 5.0 centimeters from its equilibrium position. Release the glider and measure the time that is required for the glider to make twenty complete oscillations back and forth Calculate the period of the glider by dividing the time by the number of oscillations. Increase the initial displacement of the glider in steps of 5 cm and in each case calculate the resulting oscillation period of the glider.

3. Add known masses to the glider to increase its mass and, by experiment, find the relationship between the mass of the glider and its period of oscillation.

4. Change the tension on the springs by adjusting the length of the cord attached to the right post of the air track. The tension can be measured by using a spring scale or by attaching weights to

APPARATUS PREPARATION

1 air track and blower
3 or more springs
Each spring should be stretchable from about 4 cm to 20 cm. without damage and have a spring constant of about 2 N/m (or 2000 dynes/cm) Stiffer springs will work but oscillations will not be sustained as long.
1 length of string, about 1 m long
1 balance to measure mass of glider and glider weights
1 meter stick (if air track is uncalibrated)
1 set of standard masses, 20 g to 100 g, or 1 spring scale

If only 1 lab session is available for this experiment, it is not likely that any students can finish unless they are given springs that have been calibrated in advance

SUGGESTIONS AND TECHNIQUES

1. Use lightweight springs that have small spring constants. Suitable springs, made especially for this purpose, are supplied by the manufacturers of air tracks as accessories. Since the mass of the springs is so low, its effect on calculations may be neglected.

2. To measure the spring constant of a spring, hang the spring from an overhead support and stretch it with known weights. As each weight is added, record its value in newtons and the length of the spring in meters. Plot a graph of your data showing the stretching force (the weight) vs. the length of the spring, and connect the points with the best straight line. Select any two points on the line. The difference in the force coordinates of the points, divided by the difference in the length coordinates, is the spring constant in newtons per meter.

the free end of the cord and hanging them over the edge of the table with the aid of a pulley. Find the relationship between the tension and the period of oscillation.

5. Substitute springs having different spring constants from those originally used. Find the relationship between the spring constant and the period of oscillation.

DATA

Variation of Period with Initial Displacement

Spring constant $K_{(1)}$ = 2.0 N/m

Spring constant $K_{(2)}$ = 2.0 N/m

Glider mass M = 0.240 kg

Initial tension of springs F = 0.735 N

TRIAL	Initial displacement (meters) s =	Total time (sec) t =	No of oscillations n = 1	Period (sec) T =
1	0.05	30	20	1.5
2	0.10	30	20	1.5
3	0.15	30	20	1.5
4				
5				
6				
7				

87

EXPERIMENT 21. SIMPLE HARMONIC MOTION ON A LINEAR AIR TRACK

NAME CLASS HOUR

Variation of Period with Mass

Spring constant $K_{(1)}$ = 2.0 N/m

Spring constant $K_{(2)}$ = 2.0 N/m

Initial tension of springs F = 0.735 N

Initial displacement S = 0.10 m

TRIAL	Glider mass (kg) m=	Total time (sec) t =	No. of Oscillations n =	Period (sec) T =
1	0.240	30	20	1.5
2	0.360	36	20	1.8
3	0.480	42	20	2.1
4	0.600	47	20	2.4
5				

Variation of Period with Spring Tension

Spring constant $K_{(1)}$ = 2.0 N/m

Spring constant $K_{(2)}$ = 2.0 N/m

Initial displacement S = 0.10 m

Glider mass M = 0.240 kg

TRIAL	Spring tension (N) F =	Total time (sec) t =	No. of oscillations n =	Period (sec) T =
1	0.735	30	20	1.5
2	0.588	30	20	1.5
3	0.490	30	20	1.5
4	0.343	30	20	1.5

Variation of Period with Different Spring Constants

Glider mass m = 0.240 kg

Initial tension of springs F = 0.735 N

Initial displacement S = 0.10 m

Spring constant k_1 = (N/m)	Spring constant k_2 = (N/m)	Total time (sec) t =	No of oscillations n =	Period (sec) T =
2.0	1.4	34	20	1.7
2.0	2.0	30	20	1.5
2.0	2.5	28	20	1.4
2.7	2.0	28	20	1.4
2.5	2.7	26	20	1.3

RELATED QUESTIONS AND ACTIVITIES

1. As the glider moves farther from its equilibrium position, what happens to each of the following?

The magnitude of the restoring force. *Since the springs are stretched and compressed more, the force increases*

The speed. *The potential energy increases at the expense of kinetic energy, so the speed decreases*

2 What happens to the period of the glider as each of the following is increased?

The initial displacement *No change*

The glider mass. *Period increases.*

The spring tension. *No change*

The spring constants *Period decreases*

3 On the air track, the theoretical relations between the period of oscillation (T), the mass of the glider (m), and the spring constants (k_1 and k_2) is given by the equation

$$T = 2\pi \sqrt{\frac{m}{k_1 + k_2}}$$

Insert your measured values for the mass and spring constants in the above equation and compare the theoretical periods of oscillation with the experimental values you have obtained

When k_1 was 2.0 N/m, k_2 was 2.5 N/m, and m was 0.240 kg, the experimental period was 1 4 sec. The theoretical value is 1 5 sec The error is less than 7%.

EXPERIMENT • OSCILLATING MASS HANGING FROM A SPRING

22

NAME CLASS HOUR

LAB PARTNERS. DATE

PURPOSE

The period of oscillation of a mass, bouncing at the bottom of a coiled spring is predicted from theoretical calculations and then is measured experimentally to compare results.

PROCEDURE

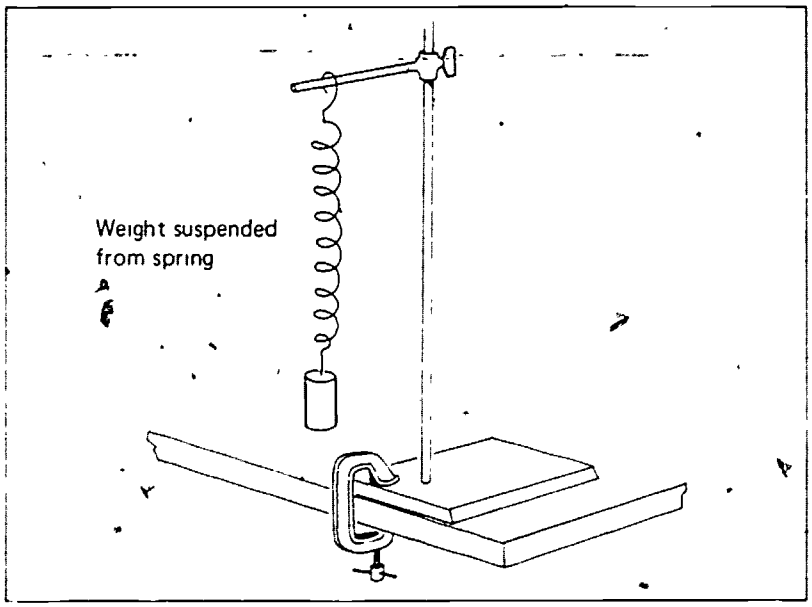

APPARATUS PREPARATION

1 set of standard masses 20 g to 100 g
1 spring, with spring constant of about 2 N/m (or 2000 dynes/cm)
1 ringstand with spring support and clamp

1 Suspend a spring with a known spring constant from a rigid overhead support. At the bottom of the spring, hang a known mass.

2. Stretch the spring and release it so that the mass bounces up and down. Find the period of oscillation by measuring the total time that it takes to make 10 or 20 bounces and then divide by the number of bounces to find the time for one oscillation.

3 Calculate the theoretical period using the equation:

$$T = 2\pi\sqrt{\frac{m}{k}}$$

where

T is the period of oscillation in seconds

m is the mass in kilograms

k is the spring constant in newtons per meter.

Compare the theoretical value obtained using the equation with the experimental value and calculate the percentage error.

4. Repeat steps 2 and 3 using heavier masses.

DATA

TRIAL	Mass (kg) m =	Spring constant (N/m) K =	Total time (sec) t =	No. of bounces n =	Experimental period (sec) T(E) =	Predicted period (sec) T(P)	Percent error E =
1	0.020	2.0	12.6	20	0.63	0.63	0
2	0.030	2.0	15.4	20	0.77	0.77	0
3	0.050	2.0	20.0	20	1.00	1.0	0
4	0.060	2.0	21.8	20	1.09	1.1	0
5	0.080	2.0	25.0	20	1.25	1.3	0

SUGGESTIONS AND TECHNIQUES

1. The best results are obtained using a spring with a small spring constant.

2. A convenient way to suspend the spring and mass is to clamp the base of a ring stand to the edge of the laboratory table and suspend the ring over the edge.

3. Make sure that the motion of the mass is vertical. Horizontal oscillations will cause errors.

4. Avoid using a mass that is so heavy that it distorts the spring beyond its elastic limit.

RELATED QUESTIONS AND ACTIVITIES

1 Unless the mass of your hanging weight is much larger than the mass of the spring, an error will be encountered because part of the spring is always bouncing along with the hanging mass. Recalculate the theoretical period by taking this into account. Add one third the mass of the spring to the entire mass of the hanging weight to find the effective mass that is bouncing. Then recalculate the theoretical period of oscillation and comment on your results below.

EXPERIMENT 22. OSCILLATING MASS HANGING FROM A SPRING

NAME CLASS HOUR

2. Make a stroboscopic photograph of the mass hanging from a spring during one half an oscillation. Analyze the photograph to determine the relative velocities of the mass during various portions of its travels. Summarize your analysis and paste the photograph in the space below

Photograph

EXPERIMENT • MECHANICAL RESONANCE

23

NAME _____ CLASS HOUR _____

LAB PARTNERS _____ DATE _____

PURPOSE

Two swinging or vibrating objects are said to be in mechanical resonance when the maximum amount of energy can be transferred from one to the other. In this experiment, we shall investigate how the amount of energy transferred depends upon the natural period or frequency of the two objects.

It is recommended that students do this experiment working in pairs. Because all the equipment can be easily adapted from common, readily available materials, this experiment can also be done as a homework assignment.

PROCEDURE

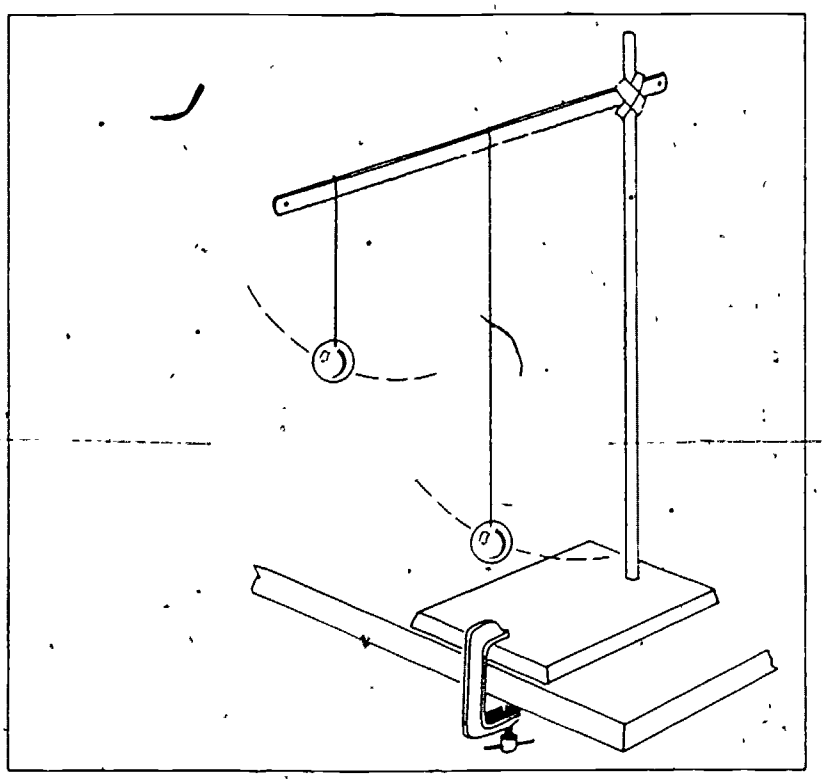

1 Suspend a weight from a string attached to a horizontal hacksaw blade or a horizontal string. Measure the length of the pendulum—the distance from the point of suspension to the center of the weight—and record it.

2 Allow the pendulum to swing back and forth, and time several swings to determine the natural period of the pendulum

3 Suspend a second pendulum from the same horizontal support, making the second pendulum twice as long as the first pendulum. Displace the first pendulum a known horizontal distance and release it while the second one is hanging still. As the first pendulum swings,

APPARATUS PREPARATION

For average or slow students, suspend two pendulums consisting of drilled brass balls or hooked weights (50 to 200 g) from a horizontal string fastened to a vertical support at each end.

For above-average students, use the hacksaw blade suspension illustrated at the left (unlike the horizontal string suspension, it causes resonance when the pendulums are of unequal length)

For superior students, have them try both versions of the apparatus and explain the similarities and differences in the results.

SUGGESTIONS AND TECHNIQUES

1. Although the length of the first pendulum is not important, 25 centimeters will be a convenient length for most laboratory purposes.

2. For consistency of results, the first pendulum should be started swinging from the same point each trial. A marker attached to a pile of books or a ring stand will be found useful for this purpose.

3. The horizontal displacement of the second pendulum from its equilibrium position may be measured by holding a meter stick near the pendulum. Another way to measure this distance is to illuminate the pendulum with a high intensity lamp and observe the shadow of the pendulum on a piece of graph paper that is held vertically on the other side. With each swing of the pendulum, note the maximum displacement of the pendulum before it starts swinging back.

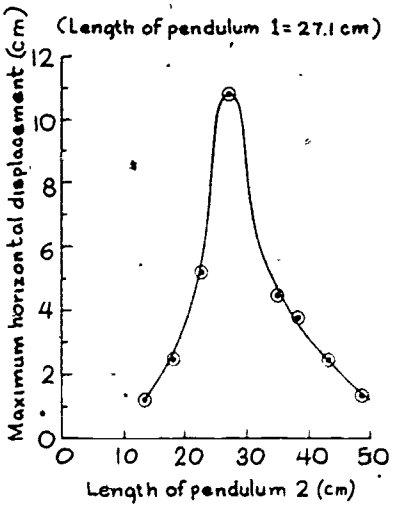

Sample graph is based on data for horizontal string

some of its energy will be transferred through the overhead support to the second pendulum. As energy is supplied, the second pendulum will swing in arcs of greater and greater amplitude which reach a maximum and then diminish. Record the magnitude of the greatest horizontal displacement that is observed.

4. Shorten the length of the second pendulum a little bit at a time until the second pendulum is approximately half the length of the first. For each new length record the maximum horizontal displacement of the second pendulum as it receives energy from the first pendulum. The initial displacement of the first pendulum should be the same each time. On graph paper, plot the maximum horizontal displacement of the second pendulum vs. the pendulum length.

DATA FOR HACKSAW BLADE
Length of pendulum 1: 20.0 cm
Initial displacement: 10.0 cm

Length of pendulum 2 (cm)	*Maximum hor. displ. (cm)*
29.3	3.0
25.5	3.8
23.3	6.6
20.0	7.0
19.0	8.1
17.0	8.4
16.3	9.4 (max)
16.0	9.0

DATA

TRIAL	Length of pendulum 1 L1 =	Initial displacement S1 =	Length of pendulum 2 L2 =	Maximum horizontal displacement S2 (max) =
1	27.1 cm	10.8 cm	48.8 cm	1.3 cm
2	27.1 cm	10.8 cm	43.3 cm	2.5 cm
3	27.1 cm	10.8 cm	38.0 cm	3.8 cm
4	27.1 cm	10.8 cm	34.6 cm	4.5 cm
5	27.1 cm	10.8 cm	27.1 cm	10.8 cm
6	27.1 cm	10.8 cm	23.1 cm	5.3 cm
7	27.1 cm	10.8 cm	18.4 cm	2.5 cm
8	27.1 cm	10.8 cm	13.5 cm	1.3 cm
9				
10				
11				
12				

NAME CLASS HOUR

RELATED QUESTIONS AND ACTIVITIES

1. What is the relationship between the length of the first pendulum and the lengths of the second pendulum when maximum energy tranfer is produced?

When the pendulums are suspended from a horizontal string, both pendulums are the same length for maximum energy transfer. When the pendulums are suspended from a hacksaw blade that is fixed at one end, maximum energy transfer occurs when the pendulum that is closer to the support is a bit longer than the other pendulum.

2. Change the length of the first pendulum and repeat the experiment to determine the maximum amplitude of the second pendulum as energy is received. State the conclusions that you can draw from this observation.

For maximum energy transfer, the length of the second pendulum must be increased or decreased in step with the first pendulum.

3. With the second pendulum set for a length which will produce maximum energy transfer, allow it to swing by itself and record its period of vibration.

_____

How does this period compare with the period of the first pendulum?

Its period of vibration is the same as the period of vibration of the first pendulum

4. Although maximum resonance should theoretically be observed when the two pendulums are the same length, you may have noticed that your results do not confirm this. One major reason is that a length of the hacksaw blade is vibrating in addition to that of the string and the pendulum bob. Measure the distances between the fixed end of the hacksaw blade and the points of suspension of each of the two pendulums and find the correction factors that must be added to the lengths of each pendulum to account for this error.

Correction factor for pendulum 1 is + _____ cm
Correction factor for pendulum 2 is + _____ cm

5. Set the length of pendulum 1 to 30.0 cm. Using your correction factors (item 4 above) predict the length of pendulum 2 that will give maximum resonance with pendulum 1.

L(2) = _____ cm

6. Experiment to confirm the prediction recorded in item 5 and calculate the percent error if the predicted length and actual length of pendulum 2 differ when resonance occurs.

% error = _____

EXPERIMENT • **SLIDING FRICTION**

24

NAME CLASS HOUR:

LAB PARTNERS DATE

PURPOSE

Friction retards motion when two objects are in contact. In this experiment we shall learn how to measure frictional forces and how to predict them.

PROCEDURE

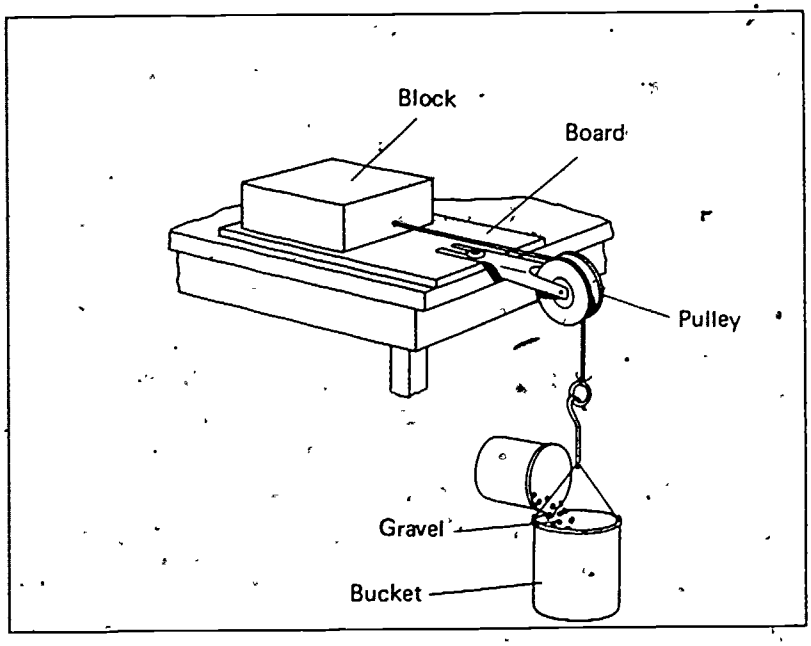

1. Find the frictional force between two pieces of wood by placing a board on a horizontal table and pulling a small block over it using the apparatus arrangement shown in the diagram. To use this apparatus, add gravel slowly to the bucket until it is heavy enough to cause the block to slide at a constant velocity when it is started with a push of the finger. Weigh the bucket and the gravel on a scale to find the force of sliding friction (F_f).

2. Find the force which is pushing the two surfaces together (F_N) by weighing the small wooden block. If the surfaces are horizontal, the weight of the upper block is pushing the two blocks together but the weight of the lower piece of wood is irrelevant.

3. Calculate the coefficient of sliding friction (C) between the two surfaces using the relationship

$$C = F_f/F_N$$

It is recommended that students work in pairs for this experiment. A considerable amount of work can also be given as a home assignment if students are lent spring scales or if they are encouraged to make their own balances using the techniques learned in Experiment 3.

APPARATUS PREPARATION

level table
1 board about 1 m long
1 wood block (piece of a 2 by 4)
1 bucket (small plastic food container or paper cup)
1 cup of gravel (or pebbles, lead shot, or sand)
1 pulley and clamp
1 length of string (about 1 m long)
1 set of weights to be added to the weight of the block
1 spring scale

SUGGESTIONS AND TECHNIQUES

1. The bucket which provides the force necessary to overcome friction should be light in weight. If sliding occurs before any gravel is added to the bucket, substitute a lighter bucket.

2. The cord which connects the block and the bucket should be strong and light in weight so that its weight does not seriously affect the calculations.

3. Check that the block and the pulley are aligned so that the cord between them is horizontal.

4. Surfaces are rarely uniform, and the block is likely to catch on rough spots as it is pulled horizontally. Several trials might be necessary to be sure that the motion is most nearly uniform as the block encounters these rough spots.

4. Find the coefficient of friction by another technique. With the cord and bucket disconnected from the apparatus, slowly tilt the lower piece of wood until the upper block slides downhill at a uniform speed when started moving. (See Figure A.) Measure the angle of tilt at which this occurs. Draw a right triangle on a piece of graph paper, with the angle of tilt as one of the angles of the triangle Divide the length of the side opposite the angle of tilt by the length of the base. (See Figure B) The result of this division is the tangent of the inclination angle and is equal to the coefficient of friction.

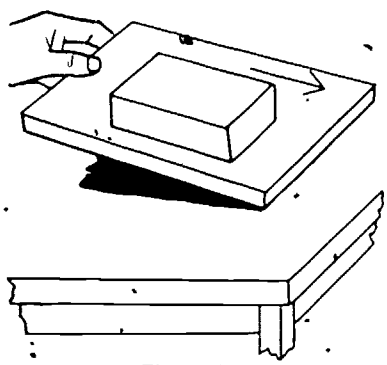

Figure A

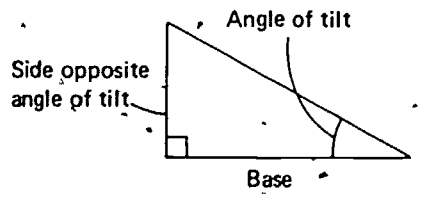

Figure B

5. Repeat the above procedure using different surfaces, such as leather on metal, metal on metal, and rubber on concrete.

EXPERIMENT 24. SLIDING FRICTION

NAME CLASS HOUR

DATA

If newton scales are not available, students can measure masses in grams and use the approximation that a 1-g mass weighs 0.01 N. Although this approximation has a 2% error, the error cancels out when the ratio of two weights is found.

TRIAL	Type of surfaces	Weight of bucket and gravel, (N) F_f	Weight of block, (N) F_N	Coefficient of friction, $C = F_f/F_N$	Angle of tilt A =	Coefficient of friction from angle of tilt diagram C =
1	wood	0.52	1.64	0.32	17°	0.31
2	"	0.66	2.13	0.31	17°	0.31
3	"	0.75	2.62	0.29	16°	0.29
4	"	0.89	3.11	0.29	16°	0.29
5						
6						
7						
8						

RELATED QUESTIONS AND SUGGESTED ACTIVITIES

1. Predict how the force of friction will be affected if the area of contact is reduced by having the block slide on one of its narrow edges instead of on its wide face.

It should not make any difference.

Try it and record your results. *It actually did make a difference. An additional 0.05N was needed for the horizontal force with the block on an edge. Perhaps the side of the block was not as smooth as the face.*

2. How would the motion of the block be affected if the cord that is pulling it is not horizontal?

The angle between the cord and the direction of motion increases as the block approaches the pulley. This reduces the amount of force which pulls the block forward. With less force, the block slows down and stops.

Try it and record your observations. *This effect was observed.*

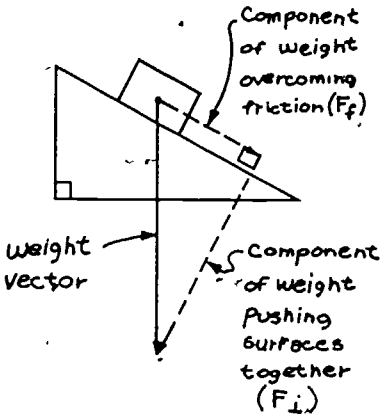

3. In the fourth step, the lower piece of wood was tilted until the block just started sliding down the incline. Then the coefficient of friction was found by measuring two sides of a triangle. Explain why dividing the lengths of two sides of a triangle gives the same result as dividing the force of friction by the perpendicular force.

The coefficient of friction remains the same, whether the block and board are horizontal or tilted together. When they are tilted and the weight of the block can just barely overcome the force of sliding friction, the triangle formed by the weight vector, the component overcoming friction, and the component pushing the surfaces together is similar to the triangle in Fig B, so the ratio of corresponding sides is the same

4 Why is it necessary to start the block moving with a small push for each trial?

There is a static friction force between the stationary surfaces that is greater than the force of sliding friction between ~~the same~~ surfaces

5. Find the coefficient of friction for other materials and compare your results with those found in reference books

Point out that experimental results seldom agree with those in reference books because of many variables which are difficult to control Some of these are the variety of the material, the smoothness, humidity conditions, and dust

6. Find the coefficient of friction between two pieces of metal when they are dry and when they are lubricated with different kinds of motor oil and oil additives

Oil additives will be found to make a considerable difference in the coefficient of friction between two metals This extension of the experiment is highly motivating and makes an excellent homework assignment

EXPERIMENT 25 BOYLE'S LAW

NAME _____ CLASS HOUR _____

LAB PARTNERS _____ DATE _____

PURPOSE

If no external forces are applied to a free gas, the gas will expand continuously until its volume becomes infinite. When pressure is applied, however, the volume of gas will be limited to a finite value and a simple expression may be found to relate the pressure and volume if the temperature is held constant. This relationship, known as Boyle's Law, will be investigated in this experiment.

This experiment can be done by students working as individuals or in pairs, but preferably not in larger groups.

The apparatus is very easy to manipulate and obtaining data presents no problem. The major difficulty that will be experienced is that of data processing. To obtain meaningful results in conventional MKS units requires that more than 40 multiplication and long division problems be solved. Since hand calculations will discourage all but the most dedicated students, it is strongly recommended that students use slide rules or electronic calculators.

PROCEDURE

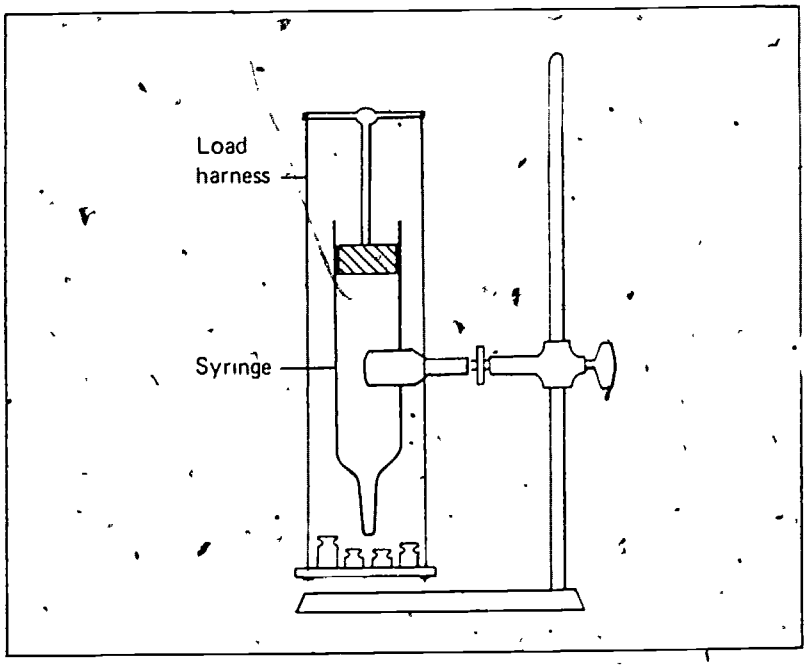

APPARATUS PREPARATION

1 Boyle's Law apparatus, plastic syringe type
1 ringstand and clamp
1 set standard masses (total mass 5 kg or less)

Several different types of Boyle's Law apparatus are available from scientific supply companies. The plastic syringe type, which was developed by Harvard Project Physics, is preferred because it is inexpensive, easy to manipulate, and does not contain mercury. The potential dangers of mercury poisoning are present when inevitable spills permit the mercury to contact the skin.

1 Mount a plastic syringe on a ring stand as shown in the diagram. Trap some air in the syringe by placing the piston in the cylinder and sealing off the lower end. The pressure on the trapped air is the barometric pressure plus the pressure that is exerted by the weight of the piston.

2. Calculate the pressure exerted by the piston by dividing its weight (in newtons) by the cross-sectional area of the piston face (in m^2). If the weight of the piston is not known, it can be found with a balance. To find the area A of the piston face, measure its radius r, and use the equation $A = \pi r^2$.

SUGGESTIONS AND TECHNIQUES

1. If the piston seems to be stuck, give it a slight twist.

2. It is important that the temperature of the trapped air be kept constant during the experiment. If the experiment is prolonged, check the temperature in the laboratory at intervals to be sure that it has not changed. Be careful not to warm the syringe by touching it unnecessarily with your hands. Also, be careful to make any pressure changes gradually. Rapid changes of pressure cause sudden temperature jumps which give undesired results.

3. The atmospheric pressure P_a in units of N/m² may be found by using the equation

$$P_a = hdg$$

where:

h is the height of mercury in a barometer in meters

d is the density of mercury (1.35×10^4 kg/m³)

g is the acceleration due to gravity (9.8 m/sec²)

4. Add known weights to the piston one at a time and record the pressure and the volume of the trapped air as each weight is added.

5. If the apparatus permits, turn the syringe upside down so that the weight of the piston will tend to reduce the effects of the atmospheric pressure on the trapped air. Record additional pressure-volume data with the apparatus in this position.

If a barometer is not available, the air pressure may be considered to be "normal" ~~at 0.760 m of mercury~~.

The value that should be entered under "piston mass" is the mass of the piston plus the mass of any additional weights that are added to the piston.

The total pressure is the sum of the pressure caused by the weight of the piston plus the atmospheric pressure.

DATA

Radius of piston, r = 0.01158 m Area of piston (πr^2) A = 4.15×10^{-4} m²

Height of mercury in barometer h = 0.760 Barometric pressure P_a = 1.00×10^5 N/m²

TRIAL	Piston mass (kg) m =	Piston weight (N) W = mg	Pressure exerted by piston (N/m²) ($\times 10^5$) $P = \frac{W}{A}$	Total pressure (N/m²) ($\times 10^5$) $P_T = P_a + P$	Volume (cc or ml) V =	Volume (m³) ($\times 10^{-5}$) V =	Inverse Volume (m⁻³) ($\times 10^4$) 1/v =	Pressure times volume (N-m) $P_T V$ =
1	0.10	0.98	0.024	1.02	34.2	34.2	2.92	3.49
2	0.20	2.0	0.048	1.05	33.8	33.8	2.96	3.55
3	0.30	2.9	0.070	1.07	33.4	33.4	2.99	3.57
4	0.60	5.9	0.14	1.14	31.8	31.8	3.14	3.62
5	0.80	7.8	0.19	1.19	31.3	31.3	3.19	3.72
6	1.10	11	0.26	1.26	29.2	29.2	3.42	3.68
7	1.60	16	0.38	1.38	26.7	26.7	3.74	3.68
8	2.10	20	0.48	1.48	24.2	24.2	4.13	3.58
9	3.10	30	0.73	1.73	20.7	20.7	4.83	3.58

EXPERIMENT 25. BOYLE'S LAW

NAME CLASS HOUR

RELATED QUESTIONS AND ACTIVITIES

1. Make a graph of volume vs. pressure. Plot the data points and draw a smooth curve connecting the points. Examine the graph and try to find a mathematical relationship between the pressure and volume. How does the volume change as the pressure is increased?

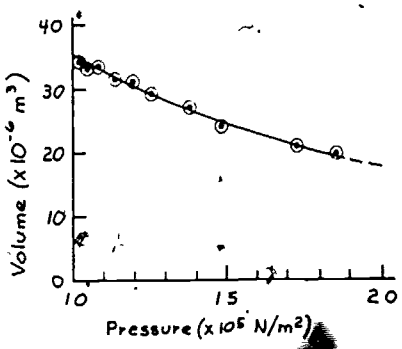

As the pressure increases, the volume decreases in some sort of inverse relationship. If the graph is extrapolated to a pressure of 2.0 x 10^5 N/m², it can be seen that the volume of enclosed air is approximately half what it was for a pressure of 1.0 x 10^5 N/m²

2. For each volume that was recorded in the data table, calculate its inverse (1/V) and enter these values in the data table. Then draw a graph of 1/V vs. pressure. When the points have been plotted, it should be possible to connect them with a straight line Any deviations from a straight line relationship were probably caused by systematic experimental errors in operating the apparatus If this is indicated on your graph, analyze your procedure carefully, and try to pinpoint your sources of error

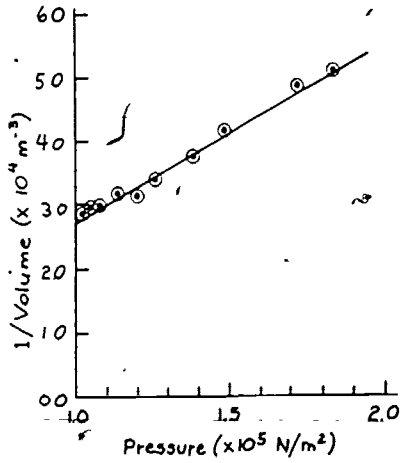

According to the graph, the errors appear to be random They were probably caused by some slight sticking of the piston as weights were added

3. If possible, fill your syringe with a gas other than air and repeat the Boyle's Law experiment exactly as you did it the first time. Compare the results with those obtained for air and account for any differences that are observed.

If a student is especially interested in trying this experiment with different gases in the syringe, challenge him or her to adapt the apparatus so that the gas can be inserted and removed with attached tubes and valves.

The particular apparatus used could not easily be filled with a gas other than air

4. For each trial, the product of pressure times volume should be a constant. Calculate this *PV* constant and enter values in the last column of the data chart. Explain any deviations from trial to trial.

The values of the PV constant averaged 3.60 N-m and ranged from 3.49 to 3.72 N-m. The variations appeared to be random without any special pattern that could be easily identified.

EXPERIMENT 26 CALIBRATING A MERCURY THERMOMETER

NAME _____ CLASS HOUR _____

LAB PARTNERS _____ DATE _____

PURPOSE

An unmarked mercury thermometer will be calibrated and then used as an instrument to measure temperatures.

This experiment can be done with students working in pairs but it is advisable for each student to do his calibrations independently.

PROCEDURE

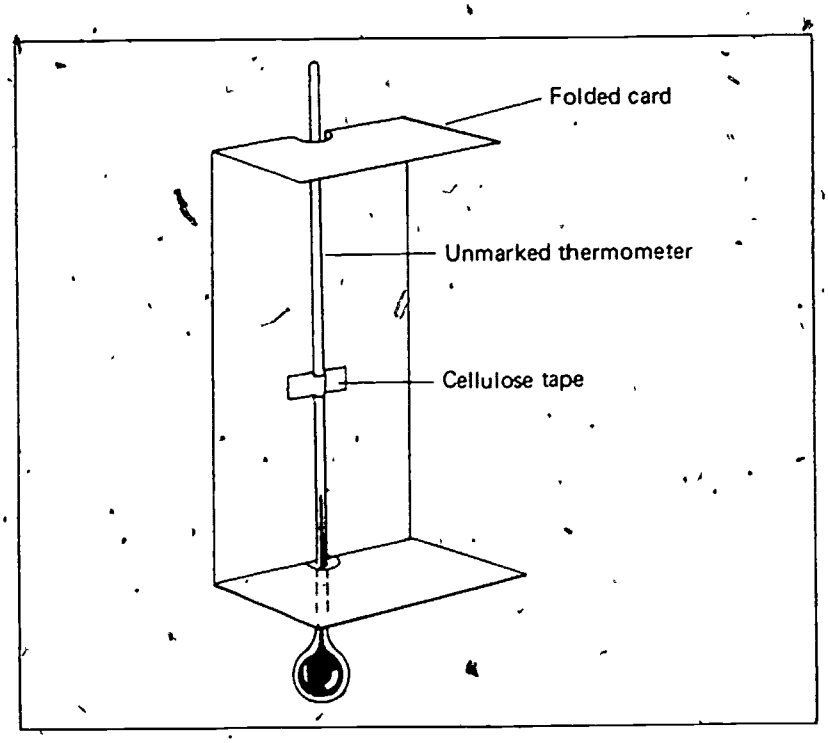

APPARATUS PREPARATION

1 uncalibrated thermometer, 10 inches or longer
1 piece of oak tag, approximately 3 inches wide and as long as the thermometer
cellulose tape (about 3 cm)
2 beakers
ice water (use ice cubes or crushed ice)
boiling water
1 metric ruler
1 accurately calibrated thermometer for the class to check results

Uncalibrated thermometers may be purchased from scientific supply companies or can be ordered directly from thermometer manufacturers.

1. Mount a blank card behind an unmarked mercury thermometer, as shown in the diagram. Use a piece of transparent cellulose tape to hold the apparatus firmly together.

2. Immerse the thermometer bulb in a container of ice water. When the mercury has reached a level that does not change after a few seconds, mark this level on the card and label it 0° C. This is one of the fixed points of the thermometer.

3. Remove the thermometer from the ice water and hold the bulb just above the surface of a container in which water is vigorously boiling. The mercury level will rise, and after a few seconds it will stabilize. Mark the new level on the thermometer card and label it 100° C. This is the second fixed point of the thermometer.

SUGGESTIONS AND TECHNIQUES

1. For the best results, use an ice-water mixture in which the ice and water are both pure (distilled or deionized). Before immersing the thermometer, stir the mixture to prevent any warm spots. The boiling water should also be pure for best results.

2. The thermometer may be jostled around if it is immersed in the boiling water, and it may be hard to read. Holding the bulb just above the surface of the boiling water avoids this difficulty.

3. Check a barometer if one is available on the day this experiment is being performed. If the air pressure is high (above 760 mm of mercury) the water will boil at a temperature higher than 100° C. If the air pressure is below 760 mm of mercury, the reverse will be true.

4. Measure the distance between the two fixed points on the thermometer card in millimeters. Plot the two fixed points on a graph which has the distance in millimeters along the vertical axis and the temperature in °C along the horizontal axis. Draw a straight line between fixed points on the graph

5. Place the thermometer on a table for a few minutes until it reaches room temperature. Measure the distance of the mercury level from the zero point on the thermometer card, and using the graph, find the corresponding temperature. Check this value with a standard room thermometer and determine the error in degrees.

6. Measure the temperature of tap water coming from the faucet using both your thermometer and a standard thermometer Enter these data in the chart and calculate the error in degrees.

7. Measure the temperatures of other objects in the laboratory using both thermometers and record your data in the chart.

DATA

Trial	Object	Temperature, Degrees Celsius Standard T(S)=	Experimental T(E) =	Error E =
1	Room Temperature	21.3	21.5	0.7%
2	Tap water	16.6	17.1	3.0
3	Air Outdoors	26.5	27.0	2.9
4				
5				

EXPERIMENT 26. CALIBRATING A MERCURY THERMOMETER

NAME CLASS HOUR

RELATED QUESTIONS AND SUGGESTED ACTIVITIES

1. Using the same unmarked thermometer, calibrate it with a fahrenheit scale calling the fixed point for ice water 32 F and the fixed point for boiling water 212 F. Divide the distance between these two fixed points into 180 Fahrenheit degrees. Try measuring the temperatures of the same objects as before but use the Fahrenheit scale. Record your results.

Object	Standard	Experimental	Error
Room Temperature	71.3°F	71.9°F	0.8%
Tap Water	62.5	63.4°F	1.4%
Air Outdoors	79.5	80.5°F	1.2%

2. A poorly calibrated thermometer with a Fahrenheit scale will always have a greater number of degrees error than the same thermometer with a celsius scale even if the same care is taken when calibrating the thermometer.

Explain why this must be true

Degrees on the Fahrenheit scale are only 5/9 as large as those on the Celsius scale.

3. The very act of measuring usually affects the item being measured. In this experiment, how did your thermometer affect the temperature of the liquids being measured?

The thermometer warmed the cold water but did not affect the boiling water.

4. What is one improvement that you could incorporate into a thermometer that would minimize its tendency to change the temperature of the object being measured?

Reduce the mass of the thermometer probe.

5. Make and calibrate a different type of thermometer from those constructed in this experiment. One type that you might try is a thermistor thermometer, which can be assembled by connecting a thermistor and an ammeter in series with a dry cell. The ammeter measures the amount of electric current in the circuit. As the temperature of the thermistor changes, the current varies. Calibrate the thermistor by placing it in ice water and then in steam and record the ammeter readings at these two fixed points. Some experimentation will be required to determine the correct range for the ammeter and the voltage of the battery that is used.

EXPERIMENT • LINEAR EXPANSION OF A SOLID

NAME. CLASS HOUR

LAB PARTNERS DATE

PURPOSE

As the temperature of most solids is increased, there is a predictable increase in length which can be used to measure temperatures. In this experiment, several solids will be investigated for these properties and the coefficients of linear expansion will be determined.

PROCEDURE

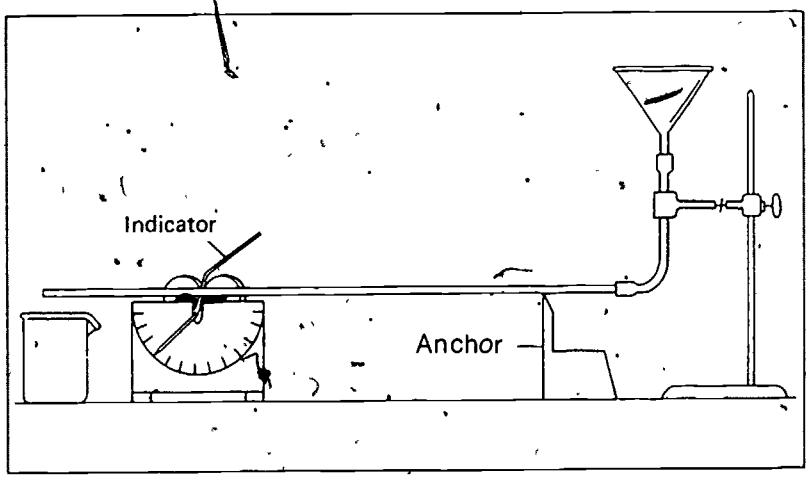

APPARATUS PREPARATION

coefficient-of-linear-expansion apparatus
funnel and rubber tubing
ice water
steam generator
Bunsen burner
container to catch condensed steam
2 ringstands and clamps
1 meter stick
1 accurately calibrated thermometer for the class to check results

SUGGESTIONS AND TECHNIQUES

1. Before doing any experiments, make sure that the knife edge of the anchor is in the groove scribed about one end of the pipe.

2. If the indicator does not move as the pipe expands and contracts, check to be sure that the pointer is free to rotate and is not jammed against the face of the protractor scale.

3. Clamp the rubber tubing to a ring stand or other firm support to be sure that it does not move while the funnel or the steam generator is inserted.

4. Put a small amount of hot water in the steam generator so that it will boil quickly. Do not boil the water until the generator has been connected to the apparatus. Connecting a steaming generator to the apparatus may be hazardous.

1. With the apparatus set up as shown in the diagram, move the anchor and the horizontal tube slowly to the left a distance of 3 centimeters and record the total number of degrees through which the indicator rotates as the anchor is being moved. (Remember that each complete circle is 360 degrees.) Divide the 3-centimeter distance by the number of degrees to find the linear distance that is associated with one degree of indicator rotation.

Distance rod traveled = 3.00 cm

Angle indicator rotated = 1730 degrees

Distance per degree

$$= \frac{3.00 \text{ cm}}{1730 \text{ degrees}}$$

$$= 1.73 \times 10^{-3} \text{ cm/deg}$$

2. Adjust the apparatus so that the distance between the anchor and the indicator at the other end of the pipe is exactly 1 meter and note the position of the indicator. Pour between 1 and 2 liters of ice water into the funnel at the anchored end of the pipe. As water comes out the other end, catch it in a container or allow it to go down a sink. As the ice water goes through the pipe, the pipe will contract in length. Record the position of the indicator at its greatest displacement from its original position.

3. Carefully remove the funnel, and connect the free end of the rubber tube to a steam generator. Boil the water in the steam generator and note the position of greatest displacement of the indicator when steam has gone through the pipe for one or two minutes.

4. Using the ice water and the steam positions of the indicator at 0° C and 100° C respectively, calculate the temperature increase associated with each degree of indicator rotation Without jarring the apparatus, remove the steam generator and allow the pipe to come to room temperature. This should take about 10 minutes. Using the data that have been recorded, determine the room temperature and check this with a standard thermometer

DATA

Local room temperature will probably change in the laboratory as steam generators are operated.

		TRIAL 1	TRIAL 2	TRIAL 3
Pipe material		Aluminum		
Indicator position				
initial	X(0)	39°C		
with ice water in pipe	X(i)	7°C		
with steam in pipe	X(s)	142°C		
Room temperature				
from data	t(exp)	21.5°C		
from standard thermometer	t =	23°C		
Error in degrees	E =	6.5%		

EXPERIMENT 27. LINEAR EXPANSION OF A SOLID

NAME CLASS HOUR

RELATED QUESTIONS AND SUGGESTED ACTIVITIES

1. Using the data collected calculate the coefficient of linear expansion of the metal pipe. This may be done using the equation.

$$\alpha = \Delta\ell \,/\, \ell_0 \Delta T$$

where: a is the coefficient of linear expansion of the metal (measured in centimeters per °C per centimeter length)

$\Delta\ell$ is the change in length of the pipe as it is heated (measured in centimeters)

ℓ_0 is the original length of the pipe (100 centimeters in this experiment)

ΔT is the change in temperature corresponding to the change in length $\Delta\ell$ (measured in °C)

For T = 100°C, the indicator rotates from 7° to 142°, or 135°. This corresponds to a change in length of (135 deg) x (1.73 x 10^{-3} cm/deg), or 0.234

$$\alpha = \frac{\Delta\ell}{\ell_0 \Delta T} = \frac{0.234 \text{ cm}}{(100 \text{ cm})(100°\text{C})} = 2.34 \times 10^{-5}/°\text{C}$$

If the material which makes up the pipe in the apparatus is known, check its coefficient of linear expansion in a reference book and compare it with your results.

	TRIAL		
	1	2	3
Name of material N =	AL		
Experimental coef. of EXP a(exp) =	$2.34 \times 10^{-5}/°C$		
Book value a(std) =	$2.40 \times 10^{-5}/°C$		
Percent error E =	2.5%		

2. If other metals or materials are available for use with the apparatus, try them, using the same procedure, and record your results.

Other handbook values are:
Brass: 1.9 x 10^{-5}/°C
Glass: 8.3 x 10^{-6}/°C
Iron: 1.1 x 10^{-5}/°C

EXPERIMENT • CALORIMETRY

28

NAME _____ CLASS HOUR _____

LAB PARTNERS _____ DATE _____

PURPOSE

Each material has a characteristic specific heat capacity which can be used to predict its temperature increase as heat is supplied to it. In this experiment the specific heat capacities of several common materials will be investigated.

It is much better for students to do this experiment working in pairs than as individuals. Since the apparatus is relatively inexpensive, no more than two students need work on each set-up.

PROCEDURE

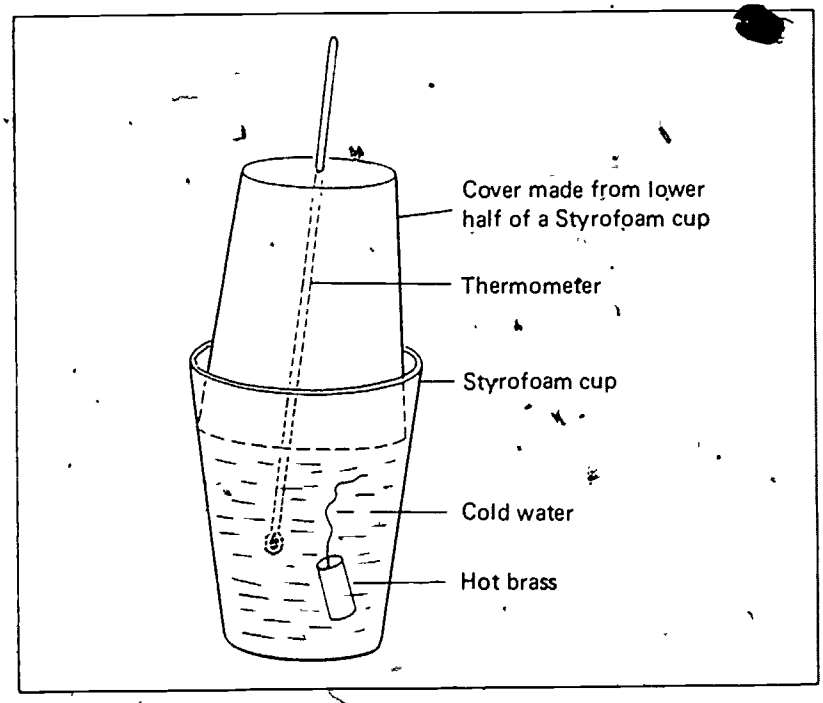

1. Fill a Styrofoam cup half full of cold tap water.

2. Find the mass of the water in the cup and record this in the data chart.

3. Heat a 50-g brass weight for a few minutes in boiling water or steam.

4. Measure the temperature of the cold tap water and the temperature of the boiling water or steam and enter these values in the data chart.

5. Remove the brass weight from the boiling water or steam, shake it to remove any drops of water which might cling to it, and quickly but carefully lower it into the cold tap water. The hot brass weight will make the water warmer. When a thermometer indicates that the temperature has stopped rising and has reached an equilibrium value, record the temperature in the data chart.

APPARATUS PREPARATION

2 Styrofoam cups
1 thermometer
1 triple beam balance
50-g brass weight
specimens of aluminum, copper, iron, and other metals
steam generator
Bunsen burner

Styrofoam cups are much less expensive than double-wall aluminum calorimeters (less than 5¢ versus over $5.00). Furthermore, because the Styrofoam has a negligible mass and an infinitesimal heat capacity, it does not have to be considered in heat exchange calculations. Student results are usually better with the Styrofoam cups because there is less likelihood of calculation errors in the data processing.

If we assume that no outside heat sources entered into the reaction, the amount of heat that was given off by the brass should be exactly equal to the amount of heat received by the water. Thus,

$$m_w c_w \Delta T_w = m_b c_b \Delta T_b.$$

Solve for c_b, the specific heat capacity of brass, using the above equation and record this value in the data chart.

7. Repeat the above experiment, using different brass weights and different quantities of water. In each case, calculate the specific heat capacity of brass.

8. Substitute other materials for the brass, such as aluminum, iron, and lead. In each case compare your results with the standard values given in a reference book, and calculate the percentage error.

DATA

		TRIAL			
		1	2	3	4
Mass of styrofoam cup (g) m(s)		5.0	5.0	5.0	5.0
Water	Mass of cup and water (g) m(s) + m(w)	143.8	141.3	174.8	145.1
Water	Mass of water (g) m(w)	138.8	136.3	169.8	140.1
Water	Initial temperature (°C) T(w)	24	26	24	25
Metal	Mass(g) m(b)	52.7	56.5	43.3	18.0
Metal	Initial temperature (°C) T(b)	100	100	100	100
Temperature of mixture (°C) T		26	29	26	27
Specific heat capacity of metal (calories/g-°C) C =		0.071	0.102	0.10	0.213
Standard value (calories/g-°C) C' =		0.092	0.093	0.11	0.214
Percent error E =		23%	10%	9%	0.5%

RELATED QUESTIONS AND ACTIVITIES

1. Compare the specific heat capacity of water with those of the various metals which were investigated in this experiment.

The specific heat capacity of water is between five and ten times higher than that of any of the materials tested.

NAME CLASS HOUR

2. Take a hot piece of metal of known specific heat capacity and a known quantity of cold water. Measure the temperatures of each and predict the temperature of the mixture when they are placed together. Check your predictions by experiment.

If the predictions and results obtained by each of the students are recorded and posted, students are motivated by the competition, and the class can analyze the techniques which produced the best predictions.

3. How could an experiment like this have led early scientists to believe that heat was an invisible substance called caloric?

When a hot metal gives up heat to cold water, making the water hot, it appears as if the heat is a real substance entering and leaving materials.

EXPERIMENT 29 CHANGE OF STATE

NAME _____ CLASS HOUR _____

LAB PARTNERS _____ DATE _____

PURPOSE

Energy is required to change the state of water from a solid to a liquid or from a liquid to a gas. The amount of energy per gram needed to melt a solid at its melting point is called the heat of fusion and the amount of energy per gram needed to boil a liquid at its boiling point is called the heat of vaporization. The heats of fusion and vaporization for water will be measured in this experiment.

Since it is not likely that the entire experiment can be completed by a pair of students during a regular laboratory session, you might wish to have the students work in groups of four, with one pair finding the heat of fusion while the other finds the heat of vaporization. The concepts that underlie each of these two exercises are very similar and it might be better to have each student repeat his experiment several times to refine techniques and procedures rather than do both halves of the experiment himself

A. HEAT OF FUSION

PROCEDURE

APPARATUS PREPARATION

2 Styrofoam cups
1 thermometer
1 triple beam balance
ice cubes or chunks of ice

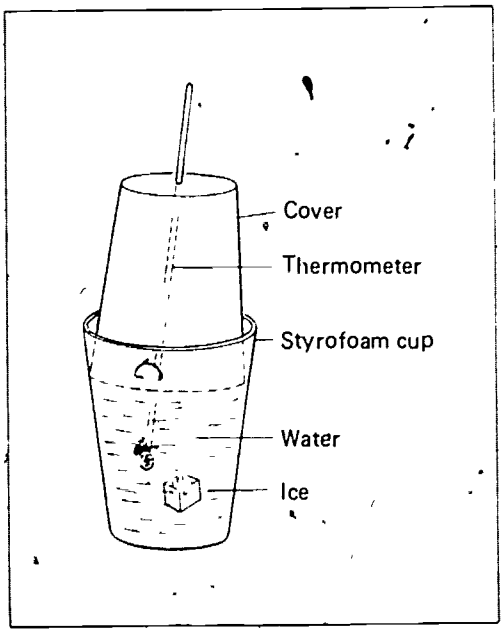

The heat of fusion of water is found by placing a melting ice cube in a cup of warm water and allowing it to melt completely Then the water from the melted ice is mixed with the warm water until an equilibrium temperature has been reached. The heat of fusion of ice is calculated from measurements of the masses of the ice and warm water and their respective initial and final temperatures.

1. Pour about 200 grams of hot water (30°C to 40°C) into a Styrofoam cup. Record the mass of the water and its temperature in the data chart.

SUGGESTIONS AND TECHNIQUES

1. Hot water from a faucet may be used if it is available. If not, prepare the hot water by heating it in the laboratory.

2. An ice cube or a large chunk of ice is preferable to crushed ice because it is easier to remove all of the surface water with a towel at the beginning of the experiment.

3. The ice should be melting to insure that it is at 0°C. If it were not melting, it might be below 0°C and you would have to account for the heat needed to bring it up to 0°C.

4. Measure the temperature of the warm water just before the ice is dropped in. If it is measured too far in advance, there is a possibility that it may have cooled somewhat before the experiment starts.

5. To further minimize conduction between the water in the cup and the laboratory, add extra insulation by using two or three Styrofoam cups, one inside the other.

2. Take a melting ice cube and dry its surface thoroughly, using cloth or paper towels. Before it has had a chance to melt again, drop the ice into the Styrofoam cup with the warm water.

3. Put a cover on the Styrofoam cup to minimize any heat exchanges with the air in the laboratory. Then, with the aid of a long thermometer which extends through a small hole in the cover, gently stir the mixture until the ice melts completely and the water inside the cup reaches an equilibrium temperature. Record this equilibrium temperature in the data chart.

4. Find the mass of ice which was originally put into the cup. This can be done by comparing the mass of water in the cup at the end of the experiment with the mass that was recorded before the ice was dropped in.

5. Calculate the heat of fusion of the ice with the aid of the following equations:

heat received by ice during and after melting = heat given off by hot water

$$m_i H_f + m_c c_w (T_f - T_c) = m_h c_w (T_f - T_h)$$

where:

- m_i is the mass of ice
- H_f is the heat of fusion
- m_c is the mass of the cold water from the melted ice (= m_i)
- c_w is the specific heat of water (= 1 cal/g-°C)
- T_c is the temperature of the cold water from the melted ice
- m_h is the mass of the hot water
- T_h is the temperature of the hot water
- T_f is the final temperature of the mixture

NAME CLASS HOUR

6. The accepted value of the heat of fusion of water is 79.7 calories per gram. Compare your value to the accepted value and calculate your percentage error.

DATA

		TRIAL 1	TRIAL 2	TRIAL 3
Mass of Styrofoam cup (g) m(s) =		5.0	5.0	5.0
Hot water	Mass of cup and water (g) m(s) + m(w) =	174.5	284.0	285.0
Hot water	Mass of water (g) m(w) =	169.5	279.0	280.0
Hot water	Initial temperature (°C) T_0 =	45	42	45
Ice	Mass (g) m(i) =	14.7	25.0	29.0
Ice	Initial temperature (°C) T_c =	0	0	0
Mixture	Mass of cup and water (g) m(s) + m(w) =	189.2	309.0	314.0
Mixture	Final temperature (°C) T_f =	34	32	34
Heat of fusion (cal/g) H_f =		92.8	79.6	72.2
Standard value (calories/g) H_f =		79.7	79.7	79.7
Percent error E =		16%	0.1%	9.4%

When two students are working together on this experiment, they can take turns operating the apparatus and doing the calculations

B. HEAT OF VAPORIZATION

PROCEDURE

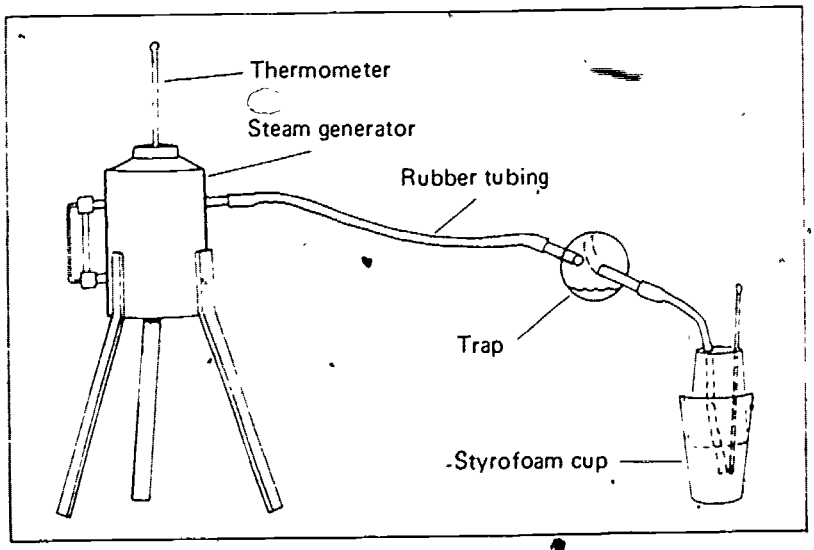

APPARATUS PREPARATION

2 Styrofoam cups
1 thermometer
1 triple beam balance
steam generator
steam trap and rubber tubing
Bunsen burner
pair of tongs

SUGGESTIONS AND TECHNIQUES

1. Be sure to keep the laboratory tables free of textbooks and articles of clothing while doing this experiment. Puddles of water are likely to collect on the table due to unavoidable spillage and condensation of steam.

2. Water that condenses in the rubber tubing will accumulate in the trap during the experiment. If this trap should become full, shut off the steam generator and empty the trap before proceeding.

3. When setting up the apparatus, use as short a length of rubber tubing as possible at the end of the trap. Any water that collects in this section of tubing will affect the results of the experiment.

4. For optimum results, note the difference in temperature between the cold water and room temperature before the steam is added. Continue adding the steam until the temperature of the water has risen above the room temperature by this amount.

The heat of vaporization of water is found by passing a quantity of steam into a cup of cold water. As the steam condenses in the cold water, the temperature of the water rises. The heat of vaporization can be calculated from measurements of the changes of temperature of the steam and the cold water and their respective masses.

1. Heat some water in a steam generator, such as the one shown in the diagram. Attach a rubber delivery tube and a water trap at the outlet.

2. Pour approximately 200 grams of cold tap water into a Styrofoam cup. Record the exact mass and temperature of the water in the data chart.

3. When the water in the steam generator is boiling vigorously and a steady flow of steam is coming out of the rubber tube, grab the end of the rubber tube with a pair of tongs and insert it into the cold water.

4. Monitor the temperature of the water in the Styrofoam cup with a thermometer. When the temperature of the water has increased by about 30°C, remove the rubber tube.

5. Record the temperature of the water in the Styrofoam cup and also the mass of the water. Calculate the mass of the steam by comparing the mass of water at the end of the experiment with the mass that was recorded at the beginning.

6. Calculate the heat of vaporization of the water using the following relationships:

heat given off by steam during and after condensation = heat received by cold water

$$mH_v + m_h c_w (T(f) - T(h)) = m_c c_w (T_f - T_c)$$

where

- m is the mass of the steam
- H_v is the heat of vaporization
- m_h is the mass of hot water from the condensed steam (= m)
- c_w is the specific heat of water (= 1 cal/g—°C)
- T_h is the initial temperature of the hot water from the condensed steam
- m_c is the mass of the cold water from the melted ice
- T_c is the initial temperature change of the cold water from the melted ice
- T_f is the final temperature of the mixture

7. The accepted value of the heat of vaporization of water is 540 calories per gram. Compare your value to the accepted value and calculate your percentage error.

DATA			TRIAL 1	TRIAL 2	TRIAL 3
Mass of Styrofoam cup (g)		$m(s)$	5.0		
Cold water	Mass of cup and water (g)	$m(s) + m(w)$	130.4		
	Mass of water (g)	$m(w)$	125.4		
	Initial temperature (°C)	T_h	18.0		
Steam	Mass (g)	m	13.7		
	Initial temperature (°C)	T_h	100		
Mixture	Mass of cup and water (g)	M(s) + (w)	144.1		
	Final temperature (°C)	$T(f)$	78.0		
Heat of vaporization (calories/g)		$H(v)$	527		
Standard value (calories/g)		$H'(v)$	540		
Percent error		E =	2.4%		

RELATED QUESTIONS AND SUGGESTED ACTIVITIES

1. In measuring the heat of fusion of water, why is it necessary to wait until the end of the experiment before measuring the mass of the ice?

If the mass of ice were measured before the mixing occurs, some of the ice might melt in the weighing process. Thus, the mass of the ice that was used in the experiment would be different from the mass of ice that was measured.

2. Why would it be difficult to measure the heat of fusion of water using a large chunk of ice and a small amount of warm water?

The water would cool to 0°C before all the ice had melted. It would be very difficult under practical conditions to tell precisely how much ice remained.

3. What precautions were taken during these experiments to minimize the effects of heat transfer to and from the surrounding air in the room?

1 The calorimeter was covered during the mixing.

2 Double cups were used to give added thickness of insulation

3 Calorimeter openings for inspection purposes were minimized.

4. What techniques or changes in the design of the apparatus would you suggest to minimize your error and come closer to the accepted values?

1 Use a thermometer with a very small heat capacity, such as a thermistor type thermometer.

2. Use a dehydration system to keep the ice dry until the instant before mixing.

5. At home design and build an apparatus incorporating the suggestions that you have made in the question above and perform the experiment as carefully and precisely as you can. Summarize the effectiveness of your improved apparatus and techniques.

119

EXPERIMENT 30 WAVES ON A COILED SPRING

NAME CLASS HOUR

LAB PARTNERS DATE

PURPOSE

In this experiment some of the basic characteristics of waves and the underlying concepts of wave motion will be investigated by observing waves on a coiled spring.

This experiment should be done by a group of two or three students. There is too much manipulation for one student working alone.

PROCEDURE

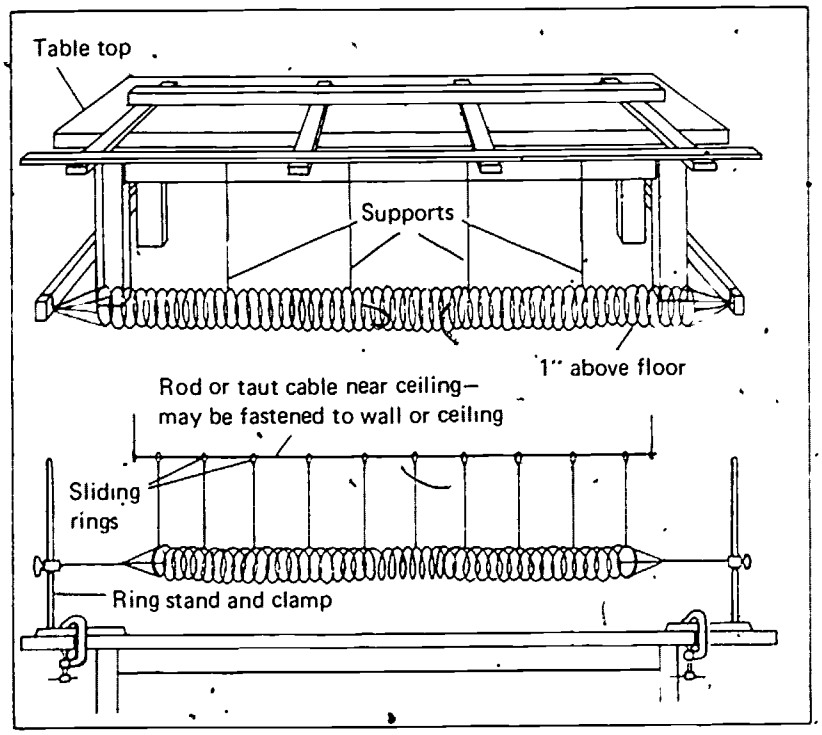

APPARATUS PREPARATION

Two types of coiled spring are available from scientific supply companies. One is a helical spring made of steel, sometimes called a "slinky." To be effective in the lab, it is important to get an extra long spring of this type, called a "double slinky." The other type of spring is a coiled brass spring about 13 mm in diameter and 2 m long when unstretched. It can be stretched as much as 10 m without damaging the spring. Both types of springs should be made available to students.

1 "double slinky"
1 brass spring, as described above
supports for springs
stop watch
meter stick

1. Suspend a long coiled spring from an overhead support or from the edge of a laboratory table, as shown in the diagram. It is important that the support be securely fastened at the ends. If an overhead wire is used for the support, it should be made as taut as possible with the aid of a turnbuckle at one end. If overhead strings are used for suspending the apparatus, they should be at least 2 m long and should be spread at even intervals along the length of the spring. Stretch the spring by attaching the ends to supports, using a strong cord at each end. If an overhead support is used, the cord should be at least 1 m long.

SUGGESTIONS AND TECHNIQUES

1. If the coiled spring is suspended properly, the waves and pulses will continue for a long time after they have been started. To stop them hold a large piece of cardboard lightly against the coils so that there will be a small amount of friction each time the wave passes. This will help stop the motion of the spring when desired.

2. Be very careful with a long spring and avoid making especially large waves or pulses that might cause the spring to twist up upon itself. Once a long spring becomes twisted, it is very difficult and sometimes impossible to straighten out again.

2. Start a transverse pulse at one end of the spring by pulling the spring a few centimeters to one side and allowing it to snap back into place. After the spring has come to rest, repeat this procedure several times while closely observing the movements of the spring. Record your observations.

The pulse traveled down the length of the spring. It was reflected back and forth several times, becoming weaker with each reflection until it finally stopped.

3. Move one end of the spring a short distance to one side and allow the spring to snap back to its original position, starting a transverse pulse. Repeat this procedure several more times, increasing the displacement each time. As the displacements are increased, what happens to the amount of energy received at the distant end of the spring?

As the initial energy is increased, the pulse lasts longer before dying out after multiple reflections.

4. Clamp the distant end of the spring or have your laboratory partner hold it firmly so that it cannot move. Observe the reflection of a transverse pulse that takes place from the end of the spring that is clamped. Compare this with the reflection that occurs when the distant end of the spring is free to move. In which instance is the reflected pulse inverted?

The pulse is inverted upon reflection when the end is clamped.

5. At one end of the spring, gather a few coils of wire together to form a compression. Release the spring and describe the motions of the wire as a longitudinal pulse travels down its length.

The compression moves down the spring in much the same manner as the transverse pulse.

EXPERIMENT 30. WAVES ON A COILED SPRING

NAME CLASS HOUR

6. Stretch one end of the spring by pulling several coils apart. Allow the coils to snap back to their original position and describe the expansion (or rarefaction) pulse which travels down the spring.

The expansion travels down the length of the spring and is reflected at the ends.

7. Tie a piece of colored string to one of the coils near the center of the spring and describe its movements (1) as a transverse pulse and (2) as a longitudinal pulse is sent down the spring.

As a transverse pulse passes, the string vibrates from side to side. As a longitudinal pulse passes, the string vibrates back and forth in the direction of the pulse.

8. Find the speed of a transverse pulse by displacing a few coils at one end of the spring a small distance to the side and then releasing the coils. After the pulse has travelled back and forth several times, record the total distance that the pulse travelled and the total time in row 1 of the data chart. Do a second trial and record the distance-time data in row 2. Divide distance by time and record the speed at the bottom of each column

9. Find the speed of a longitudinal pulse by squeezing a few coils at one end of the spring together and then releasing them. Record the distance-time data and speed of the pulse in rows 3 and 4 of the data chart

10 Using either a transverse or a longitudinal pulse, experiment to find the speed of a small amplitude pulse and that of a large amplitude pulse on the same spring. Record these time-distance data in columns 5 through 8 of the data chart.

I. SPEED OF PULSES

	Transverse		Longitudinal		Small Amplitude		Large Amplitude	
TRIAL	1	2	3	4	5	6	7	8
Distance (meters) d =	28.0	28.0	28.0	28.0	28.0	28.0	28.0	28.0
Time (sec) t =	49.1	47.5	41.8	40.0	48.3	48.3	49.1	48.3
Speed (m/sec) v =	.57	.59	.67	.70	.58	.58	.57	.58

The pulse travels too fast for the students to time over a single length of the spring. For best results, students should time the pulse over, say, 20 reflections.

In doing this exercise, it is important that the tension of the spring be held constant when measuring the velocity by the two different techniques

The greatest source of error will be the measurement between adjacent nodes unless the students invent a technique of accurately measuring these distances while the spring is in motion.

11. Move one end of the spring from side to side in an even series of motions to start a train of pulses, or a wave, going down the spring The reflected pulses from the far end of the spring combine with the incoming pulses to form a standing wave which has nodes—places on the spring where there is no vibration. When a standing wave has been established, measure the distance between two adjacent nodes. Calculate the wavelength by doubling the distance between the two adjacent nodes. When the wavelength is multiplied by the frequency (number of times per second that the spring is moved from side to side) the product will be the speed of the wave Enter the data and calculations in data chart II.

II. SPEED OF WAVES

	TRIAL		
	1	2	3
Frequency (pulses per sec) F =	3.2		
Distance between nodes (meters) X =	.09		
Wavelength L = 2X (meters) L =	.18		
Speed v = FL (m/sec) V =	.58		

RELATED QUESTIONS AND SUGGESTED ACTIVITIES

1. Compare the speeds at which a transverse pulse and a longitudinal pulse travel through a long coiled spring.

A transverse pulse travels more slowly than a longitudinal pulse

2. Compare the speed of a large-amplitude pulse with that of a small-amplitude pulse.

Both travel at the same rate.

EXPERIMENT 30. WAVES ON A COILED SPRING

NAME CLASS HOUR

3. Fasten together two coil springs of different diameter to make one long spring. Predict what will happen as a pulse from either direction comes to the boundary between the two springs.

The pulse will change speed as it crosses the boundary and is transmitted to the spring on the other side.

Try it and record your observations. *The pulse does change speed in going from one spring to the other. Part of the pulse is reflected at the boundary and travels back toward the original end.*

It may be difficult to see the reflected pulse. If the original pulse travels from a lighter spring to a heavier one, the reflected pulse will be upside-down; if it travels from a heavier to a lighter spring, the reflected pulse will be right-side-up.

4 Predict what will happen on a coiled spring when two pulses, started simultaneously at opposite ends of the spring, meet near the center.

When they meet, the energies of each pulse will add to the other, making a much higher pulse.

Try it and record your observations. *The instant that the pulses meet, a higher pulse is formed. Afterwards, the two pulses continue on their way, as if nothing had happened.*

EXPERIMENT • WAVES IN A RIPPLE TANK

31

NAME: CLASS HOUR:

LAB PARTNERS: DATE:

PURPOSE

A ripple tank permits you to observe water waves in two dimensions on a projection screen. These observations are directly applicable to phenomena associated with invisible waves, such as the electromagnetic waves, which will be studied later.

PROCEDURE

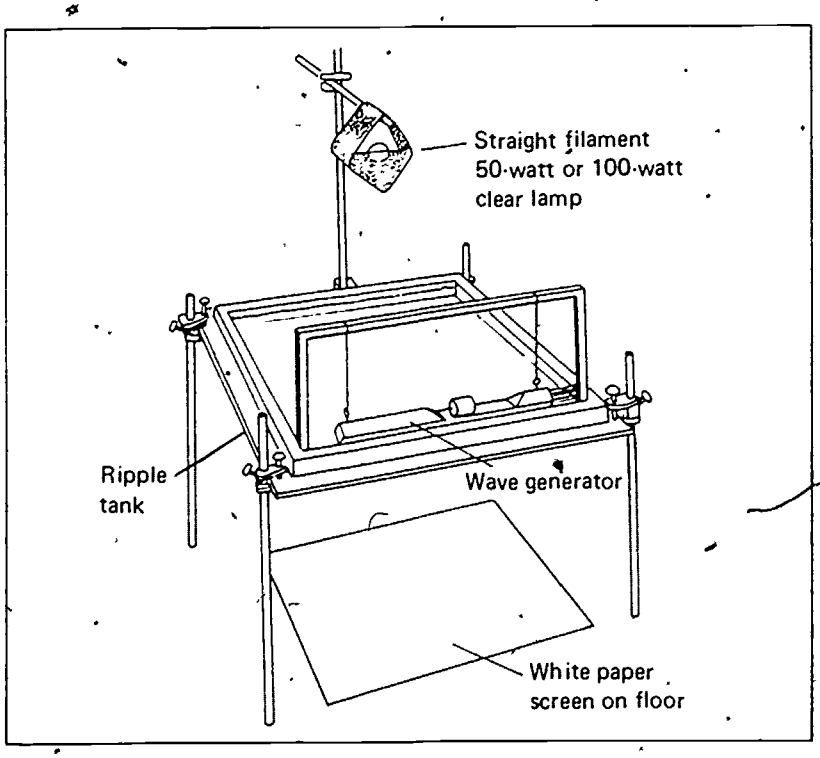

APPARATUS PREPARATION

ripple tank
electric wave generator
white paper screen
stop watch
meter stick
hand-operated stroboscope

Straight filament bulbs are supplied with the ripple tanks. When a bulb burns out, be sure to replace it with the same type bulb or it might be impossible to focus the wave patterns on the screen.

The ripple tank is an excellent device for developing qualitative concepts of wave phenomena. If possible, try to keep two or three ripple tanks set up in the corner of the lab for a month or two. In addition to this experiment, the ripple tank is also called for in the three experiments on reflection, refraction, and diffraction which follow.

1. Set up a ripple tank as shown in the diagram. Fill the tank with water to a depth of 7 mm. Wet the sides of the tank where the water touches them by running a wet finger along them. Fix the leveling instruments so that the tank is perfectly level and the water depth is the same everywhere.

2. Start a pulse by dipping your finger in the center of the tank. Float some small pieces of cork on the water and describe the motion of each piece of cork as the pulse passes by.

Each piece of cork bobs up and down as the pulse passes, but it stays in the same location in the tank that it had before the arrival of the pulse.

3. Start a pulse by dipping your finger in the center of the tank and note the shape of the wave as it spreads out from the center. What does this indicate about the speed of the pulse in each direction?

The pulse spreads out in a circle. This indicates that the speed is the same in all directions along the surface of the water.

(5) It will be very difficult for students to measure the distance between waves on the screen to within tenths of a centimeter. It is much easier to measure the distance between 5 waves and then divide by five to find the wavelength with good precision.

A stroboscope with 6 slits was used. The strobe rate was found by counting the number of rotations in a 15-sec interval and multiplying the resulting number of rotations per sec by 6 slits/rotation.

$$\frac{(20\ rot)}{(15\ sec)}\left(6\ \frac{slits}{rot}\right) = 8\ \frac{slits}{sec}$$

$$\frac{(40\ rot)}{(15\ sec)}\left(6\ \frac{slits}{rot}\right) = 16\ \frac{slits}{sec}$$

$$\frac{(60\ rot)}{(15\ sec)}\left(6\ \frac{slits}{rot}\right) = 24\ \frac{slits}{sec}$$

The actual wavelength is 3.1 cm. This appears when 8 slits pass the eye per second. When 16 slits pass the eye per second, students are deceived into thinking that the distance between waves has shortened by one half. This is an optical illusion caused by the persistence of the image of the waves at one instant while the viewer is seeing the waves one-half period later. As the strobe frequency is increased, more and more immediate positions of the waves are observed.

4. Set up the electric wave generator at the edge of the tank so that a bead is automatically dipped into the water at regular intervals to produce a series of circular waves. Adjust the height of the lamp above the tank to make the image of these waves on the screen beneath the tank as clear as possible.

5. Place a meter stick on the screen to measure the wavelength of the waves being produced. Look at the screen through a hand-held rotating stroboscope. Change the rate at which the stroboscope is being rotated and notice that there are several different rates of rotation that make the waves on the screen appear to be standing still. Starting with the slowest rate which "stops" the waves, record the strobe rate and the wavelength in the data chart. How to measure the strobe rate is explained under Suggestions and Techniques. Repeat this procedure for each of the faster strobe speeds which "stop" the action. Notice that the distance between successive waves appears to become progressively shorter as the stroboscope is turned faster and faster. The longest distance between waves that is observed is the actual wavelength of the water waves. Measure this wavelength with the aid of the meterstick on the screen and also measure the apparent wavelengths of the waves when the stroboscope is rotated at faster rates.

I. STROBOSCOPE CALIBRATION

TRIAL	No of Slits per Second Passing the Eye N =	Actual or Apparent Wavelength (cm) L =
1	8	3.1 cm
2	16	1.6 cm
3	24	1.0 cm
4		
5		
6		
7		

6. Adjust the wave generator so that it makes waves of greater frequency. Measure the frequency as follows. Rotate the stroboscope at different rates until you find the fastest rate at which the wavelength of the waves still appears as the *actual* wavelength when viewed through the stroboscope, and not any shorter. At this strobe rate, the number of slits passing your eye per second is equal to the frequency of the wave in hertz, because you are catching a glimpse of

the wave exactly once per period. Record both the frequency and the wavelength of the wave. Repeat for several different frequencies as the wave generator is adjusted. Record all the frequencies and corresponding wavelengths in the data chart.

SUGGESTIONS AND TECHNIQUES

1. Most commercial ripple tanks have sloping edges to dissipate the energy of the water waves. If your tank does not have sloping edges, and unwanted reflections are a problem, make an artificial beach by placing some wire mesh around the edges of the water, and cover the mesh with some cotton gauze.

2 Make sure that the legs of your ripple tank are tight in their sockets. If they are not, the tank may start vibrating and generate distracting waves.

3. The images of the waves that are seen on the screen of the ripple tank will probably be a bit larger than the actual waves themselves. You can determine the scaling factor by placing an object of known length at the level of the water and measuring the length of the image that is cast on the screen below You may wish to take this scaling factor into account when measuring the actual wavelength of water waves.

4. When using a stroboscope, it is a good idea to work with a laboratory partner who can verify each of the measurements and help with the stroboscope timing. While one of you looks through the stroboscope and rotates it at a rate that "freezes" the motion of the waves, the other can use a watch to determine the stroboscope rotation rate (number of complete rotations per second). The number of slits per second passing the eye equals the number of slits on the stroboscope times the number of complete rotations per second.

5. When a ripple tank is first filled, small air bubbles sometimes cling to the glass, making visibility difficult. These bubbles are easily removed by agitating the water.

6. Most of the commercial wave generators are made to vibrate by means of an off-axis weight attached to the rotating armature. The vibration amplitude may be adjusted by moving this weight closer to or further away from the center of rotation. If it is too far off center, the wave generator may not vibrate at all.

7. To start the wave generator it is often necessary to connect the electricity and rotate the motor axis with your hand.

CAUTION:
Be sure that the generator motor is operating whenever the electricity is turned on. If electricity is allowed to be left on when the motor is still, there will be large amounts of current in the motor which will cause overheating and damage the motor winding.

II. WAVELENGTH VS. FREQUENCY

TRIAL	Frequency (Hz) F =	Wavelength (cm) L =
1	8	3.1
2	10	2.5
3	12	2.0
4	14	1.8
5	16	1.5
6	18	1.4

State the relationship between the frequency of a wave and the wavelength.

The wavelength varies inversely with the frequency.

7. Fill the tank to a depth of 10 mm. Place a large square of glass in the tank and support it with washers so the depth of the water above the top of the glass is only 1 mm. Start the wave generator and using the stroboscope, measure the frequency and wavelength in both deep and shallow water Record your results in the data table.

III. SPEED VS. DEPTH OF WATER

	Frequency (Hz) F =	Wavelength (cm) L =	Speed (cm/sec) V = FL
Deep water D	8	3.1	25
Shallow water S	8	2.6	21

Do your measurements support the principle that water waves travel more slowly in shallow water than in deep water? Explain.

In deep water the waves moved 4 cm/sec faster than in the shallow water.

EXPERIMENT 31. WAVES IN A RIPPLE TANK

NAME CLASS HOUR

RELATED QUESTIONS AND SUGGESTED ACTIVITIES

1. Generate a wave of straight pulses in the ripple tank and place a long paraffin block at the distant end of the tank to reflect the wave back toward the source. The reflected wave will combine with the incoming wave to produce a standing wave. Measure the wavelength of the standing wave, and find the frequency of the wave generator, using a stroboscope. Calculate the wave speed by multiplying the frequency by the wavelength and check this value with speed measurements that you have made by other methods.

Calculations by the two methods should agree within 20% It is very difficult to make more precise measurements with a ripple tank.

2 When the water in the center of a ripple tank is disturbed, a circular pulse spreads out from the center of the disturbance Predict how the height of the pulse will change as the pulse spreads out, and devise an experiment to check your predictions

Encourage ingenuity on the part of any students who are able to use unusual techniques to measure the pulse height

As the pulse spreads out, the energy is dispersed over a greater distance, so the height of the pulse should decrease (Actual measurement of the pulse height at various distances from the center is a fair challenge to student ingenuity)

Such encouragement will be remembered long after the theories and formulas are forgotten

3. The speed of a water wave varies with the depth of the water Set up an experiment to determine the relationship between the wave speed and the water depth and record your results below. (HINT Keep the frequency constant, as the wave speed also varies with frequency even in water of constant depth)

TRIAL	Water depth (meters) D =	Wavelength meters L =	Frequency (Waves per sec.) F =	Speed V = FL (cm/sec) V =
1				
2				
3				
4				

No meaningful sample data for this open-ended experiment is available. According to classical hydrodynamics, the speed of a water wave in water whose depth does not exceed half a wavelength is given by the equation:

$$v = \sqrt{gh}$$

where v is the speed

g is the acceleration of gravity

h is the water depth

EXPERIMENT • REFLECTION

32

NAME _____ CLASS HOUR _____

LAB PARTNERS _____ DATE _____

PURPOSE

Reflections occur when waves encounter the boundary between two media. The principals of reflection are the same for all waves. In this experiment you will be given an opportunity to investigate the similarities in reflection behavior of several different kinds of waves.

It is recommended that students perform this experiment in pairs.

The concepts of physics which are involved in the reflection of waves are easy for students to grasp. Unless one wishes to delve more deeply into the nature of surface layers at which reflections occur, the tasks should not present any difficulty for the average student.

PROCEDURE

A. REFLECTION OF WATER WAVES

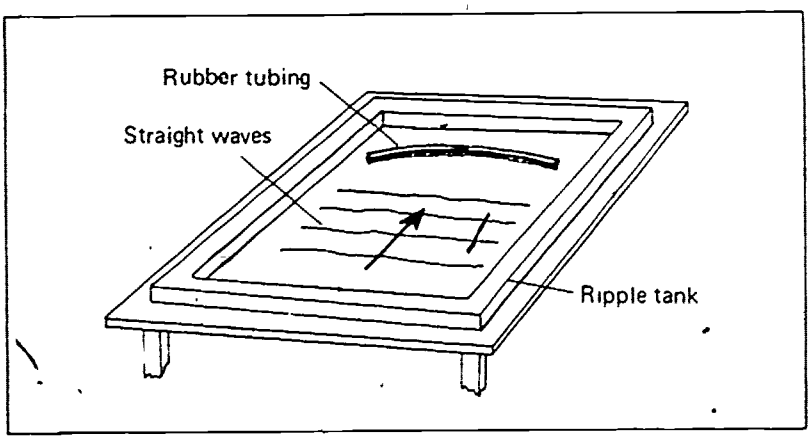

Even if all the suggested apparatus is available, you might wish to have each group of students do only one part of the experiment and then share their notes and data with the others. The most important outcome of this experiment is for students to see that water waves, light waves, and microwaves undergo reflections in a similar manner.

1. Fill a ripple tank with water to a depth of 7 mm, level the tank, and adjust the overhead lamp so that the waves that are projected on the screen are clear and sharp.

2. Connect the wave generator to produce a series of straight waves that are approximately 3 cm apart.

3. At the far end of the tank, place a length of rubber tubing in the water to act as a barrier and reflect the waves. Start with the barrier parallel to the wave fronts. Slowly change the angle between the barrier and the wave fronts and observe the change of direction that takes place in the reflected waves. Record your observations.

As the angle between the barrier and the incoming wavefronts is made greater, the angle between the incoming and reflected wavefronts also becomes greater.

APPARATUS PREPARATION

ripple tank
wave generator
a 30-cm length of rubber tubing
weights to hold tubing in position
white paper screen
water
protractor

SUGGESTIONS AND TECHNIQUES

1. Refer to the manufacturer's instructions for specific procedures that are necessary to set up a microwave set or a laser.

2. A suitable reflector for microwaves may be either a large silvered mirror, a sheet metal plate, or a large sheet of aluminum wrapping foil stapled to a flat sheet of cardboard for rigidity.

3. When using a laser, be very careful that the light never enters your eyes or the eyes of anyone in the laboratory.

4. Shut off the electric power to all the apparatus when it is not in actual use. This will extend the life of the equipment and minimize any risk of accidents.

4. With straight waves approaching the rubber tubing barrier at the far end of the tank, bend the rubber tubing into a parabolic shape so the reflected waves are focused at a sharp point near the center of the ripple tank. Use some weights to hold the rubber tubing in this position, and mark the location of the focal point on the screen below the tank.

5. Shut off the wave generator and predict how waves will be reflected from the parabolic barrier when you dip your finger into the tank at the focal point. Try this and tell whether or not your predictions have been verified.

The reverse ought to occur—that is, the reflected waves should be straight.

When observed on a ripple tank, approximately straight reflected waves were detected.

B. REFLECTION OF LIGHT WAVES

APPARATUS PREPARATION

glass mirror, about 10 cm by 10 cm
block of wood or books
sheet of note paper
cardboard or soft wood to fit under paper
4 straight pins
protractor

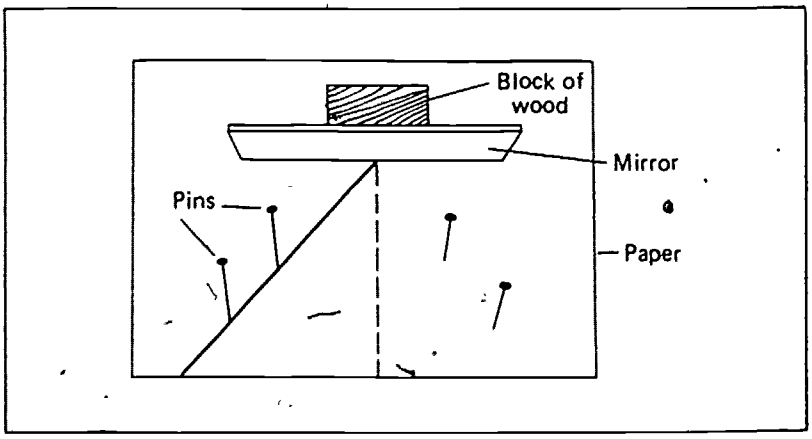

1. Place a sheet of note paper on a table with a piece of cardboard or soft wood beneath the paper for a backing. Set a small

hand mirror upright on the paper and support it in this position with some books or a large block of wood.

2. Outline the bottom of the mirror on the paper. Draw a straight line to represent a ray of light going toward the mirror and hitting it at an angle. At the point where the light ray hits the mirror, construct a line perpendicular to the mirror outline.

3. Place two straight pins upright along the line which represents the light ray. Look toward the mirror from a point on the other side of the perpendicular line you drew. Place two additional pins in the paper so that they and the mirror images of the first two pins appear to be in a single straight line.

4. Draw a line through the positions of the second two pins to the mirror This line represents the reflection of the first ray of light.

5. According to the law of reflection, the angle of incidence (the angle between the incident ray and the perpendicular) is always equal to the angle of reflection (the angle between the reflected ray and the perpendicular). Measure these angles with a protractor and calculate your percentage error. _____

angle of incidence: 26°29′ % error = 6.9% angle of reflection 24°39′

I. Reflection of Light

TRIAL	Angle of incidence i =	Angle of reflection r =	Percent error E =
1	29°29′	27°15′	7.6%
2	38°29′	39°44′	3.2%

C. REFLECTION OF MICROWAVES

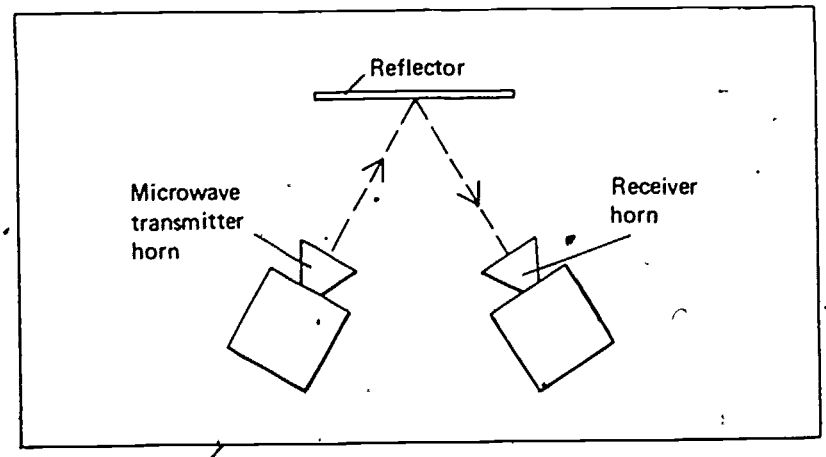

APPARATUS PREPARATION

microwave transmission set
metal plate, mirror, or aluminum foil reflector, about 20 cm by 20 cm
protractor

1. Place the transmitter and receiver horns of a microwave experimenting set side by side, facing in the same direction.

2. Place a large metal plate, mirror, or foil reflector about two meters in front of the horns and rotate it until the maximum signal is indicated in the receiver. Set up a procedure to gather data that will prove that microwaves obey the laws of reflection. That is, prove that the incident ray, the reflected ray, and the perpendicular are always in the same plane; and the angle of incidence is always equal to the angle of reflection.

With most microwave sets of wavelength 3 cm, agreement between the incident and reflection angles should be within 5%.

D. REFLECTION OF A LASER BEAM

APPARATUS PREPARATION

helium-neon laser
electronic photometer
several rough objects, such as unpolished metal, paper of different colors, different types of wood
glass square or beamsplitter
protractor

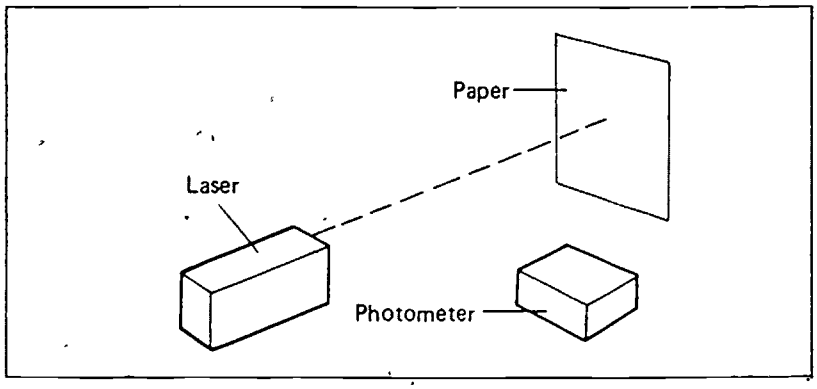

The photometer used was an inexpensive ($50) battery-operated device which consisted of a solar cell detector, a dc amplifier and a meter readout. Such photometers are available from laser manufacturers. Ordinary photometers which are used for photography will probably not work because they are not sufficiently sensitive to the red light.

The helium-neon laser had a 0.5 mW output power. The reflecting material tested was spirit duplicator paper (white).

1. Most objects scatter light as they reflect it, producing a *diffuse* (scattered) reflection. Point a laser beam at several rough objects, such as unpolished metal, paper of different colors, and different types of wood. Measure the amount of reflected light that is picked up by a photometer that is held a short distance in front of the object. Using the incident beam as a standard, measure the fraction of light which is reflected from the surface at different angles.

SCATTERING BY REFLECTION

Reading of incident beam I = 20

TRIAL	Angle between incident beam and surface A =	Reading of reflected light R =	Fraction of light reflected R/I =
1	90°	9.8	49 %
2	60°	9.8	49 %
3	30°	5.6	28 %
4	10°	0.1	5 %

EXPERIMENT 32. REFLECTION

NAME CLASS HOUR

2. Using a flat glass plate or a specially designed beam splitter, determine the proportion of transmitted light to reflected light that is detected with a photometer as the glass plate is rotated at different angles with respect to the incident beam.

The object used was a commercial beam splitter. This is a small square of partially silvered glass.

Many other materials can be investigated in a similar manner. Such open-ended experiments which investigate natural phenomena in a meaningful way should be encouraged. It is not uncommon for students to become quite enthusiastic and even make discoveries which are not recorded in textbooks.

BEAM SPLITTING

Reading of incident beam I = 11

III. Beam Splitter Reflection

A laser beam splitter was used to get the following:

TRIAL	Angle between incident beam and surface A =	Reading of transmitted light T =	Reading of reflected light R =	Proportion of transmitted light to reflected light R/I =
1	90°	4.7	6.1	0.77
2	70°	5.0	6.0	0.83
3	50°	4.3	5.6	0.77
4	40°	4.0	6.0	0.67
5	30°	3.2	5.8	0.55
6				

RELATED QUESTIONS AND SUGGESTED ACTIVITIES

1 Stack a laser, microwave transmitter, and a flashlight one above the other with the aid of ringstands or other supports. Aim all three at the same spot on a distant flat mirror and predict the exact locations of the three reflected beams. Account for any errors between the predicted positions and the actual positions of the reflected beams.

All three should obey the same laws of reflection. There will be a difference in precision—the laser is the most precise, followed by the microwave transmitter, and then the flashlight.

2. Test the ability of various materials to reflect microwaves or a laser beam and develop a theory to describe why some materials are better reflectors than others.

Although most students will say that good reflectors must be smooth and shiny, they will be surprised to find that Scotchlite reflecting paper, which is rough, is an excellent reflector. Have the students check their theories with those in texts.

This technique is so good that the precision is limited only by the ability of the student to measure the distances precisely. Results will vary from those within 30% to those with a zero error to two significant figures.

3. Verify the laws of reflection using a laser beam and long distance techniques as follows:

a. Aim the laser beam across the center of a large room so that it hits the center of the rear wall.

b. Tape a small mirror to the wall and circle the area on the mirror where the laser beam strikes it. Adjust the positions of the laser and the mirror so the reflected beam is superimposed on the incident beam. The two beams are now on the perpendicular to the mirror surface.

c. In 50-cm steps, move the laser 3 meters to the right of its original position. At each step, point the laser at the mirror and record the angular distance that the reflected beam appears to the left of the original laser position. Compare your data with the ideal values given by the laws of reflection and calculate your percentage error.

EXPERIMENT • REFRACTION

33

NAME CLASS HOUR:

LAB PARTNERS DATE:

PURPOSE

In this experiment we shall investigate how the refraction, or bending, of waves is related to changes in the wave velocity.

A. REFRACTION OF WATER WAVES IN A RIPPLE TANK

PROCEDURE

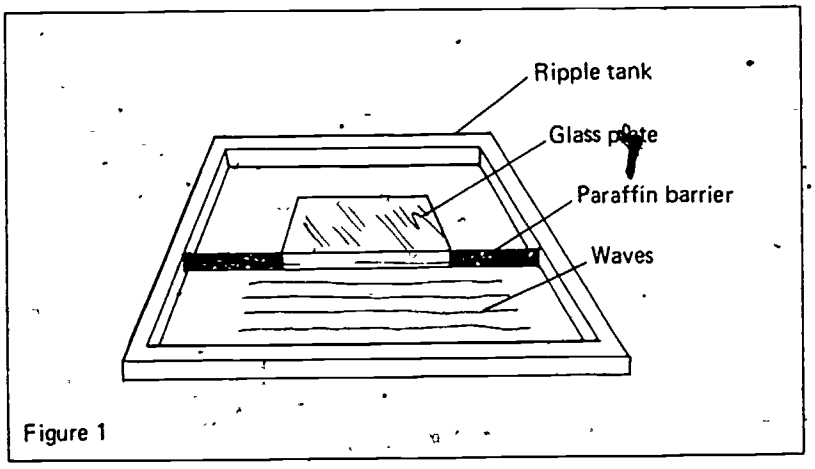

Figure 1

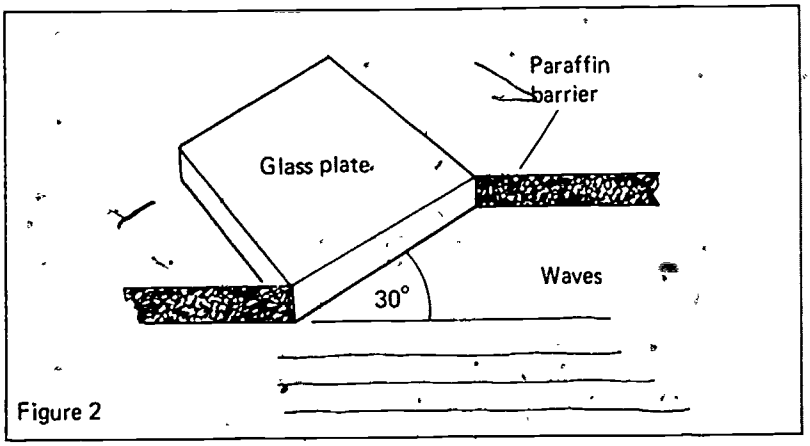

Figure 2

1. Fill the ripple tank with water to a depth of about 10 mm, level the tank, and adjust the overhead lamp so that the waves that are projected on the screen are clear and sharp.

2. Put a rectangular piece of glass (10 cm X 15 cm) in the ripple tank and support the glass horizontally so that the top surface of the glass is approximately 2 mm below the surface of the water.

This experiment should be done by students working in groups of two or three.

There is so much similarity in the refraction of water waves, light waves, and microwaves that all three should be investigated in the same lab session if at all possible.

Since there is too much for any individual or group to do, it is suggested that the class be divided, with each section doing a different part of the experiment, followed by a class discussion of the overall results.

APPARATUS PREPARATIONS

- *ripple tank with wave generator*
- *a 10-cm-by-15-cm glass plate*
- *coins, to use as spacers to raise or lower the glass plate in the ripple tank*
- *paraffin blocks*
- *water*
- *white paper screen*
- *hand-held stroboscope*
- *protractor*

Paraffin blocks are available wherever canning or candlemaking supplies are sold.

SUGGESTIONS AND TECHNIQUES

1. Glass squares 7 cm X 7 cm are recommended because these are standard sizes sold by scientific supply companies. Glass squares (or rectangles) of other sizes will work equally well. For the greatest precision, distances AB and CD should be as great as possible.

2. It is important that one of the polished edges of the glass square coincide exactly with the top edge of the square that is drawn on the diagram. Any misalignments will affect the accuracy of your results.

3. If the angle between the surface of the glass and the incident ray is made too small, it is possible that the emerging ray will come out of the right side of the glass square instead of at the bottom. This condition can be observed when using a glass square that has four polished edges. The procedure which is used to calculate the index of refraction of glass in this particular case is no different than that used for the original procedure.

4. For the most precise results, use a very sharp pencil and measure all distances to the nearest tenth of a millimeter. Ask someone else to check your sighting of the four pins in each case to be sure that they are perfectly aligned before removing the glass from the diagram.

5. Check that the angle between the refracted ray and the second wavefront is 90°. This can be done with the aid of a protractor or with the aid of a right angle at the corner of a sheet of note paper.

6. The index of refraction of glass varies slightly with the color of the light being used. It is not expected that the comparatively imprecise techniques used for this experiment will detect this variation.

3. Place two paraffin barriers in the ripple tank in the positions shown in Figure 1. This will divide the tank into two parts: one in which the water is 10 mm deep; and one in which the water is only 2 mm deep.

4. At the deep end of the tank, connect the wave generator to produce a series of straight waves that are approximately 3 cm apart.

5. Fix the boundary between the shallow and deep water so that it is parallel to the direction in which the wave fronts are approaching. With a stroboscope, "stop" the motion of the waves on the screen beneath the tank, and with a meter stick measure the wavelengths in shallow water and in deep water. Change the frequency of the wave generator several times. With each change of frequency record the wavelengths for deep and shallow water in the data chart.

6. Examine the data pairs of wavelengths for the different frequencies of the wave generator and see if you can find a pattern which relates the data. If so, what is the pattern?

The ratio of wavelengths in deep and shallow water does not change at different frequencies.

7. Adjust the boundary between the deep and shallow water so the wave fronts will hit the boundary at an angle of about 30° (see Figure 2). Observe any changes in the direction of the wavefronts and record your observations.

As the wavefronts pass over the submerged glass square, they change direction. The wavefronts over the glass make an angle with the boundary that is obviously less than 30 degrees.

DATA

TRIAL	Frequency (Hz) F =	Wavelength in deep water (cm) L(D) =	Wavelength in shallow water (cm) L(S) =
	8	3.1	2.6
2	10	2.5	2.1
3	12	2.1	1.8
4	14	1.8	1.5
5	16	1.6	1.3
6			
7			

B. REFRACTION OF LIGHT WAVES TRAVELING FROM AIR TO GLASS

PROCEDURE

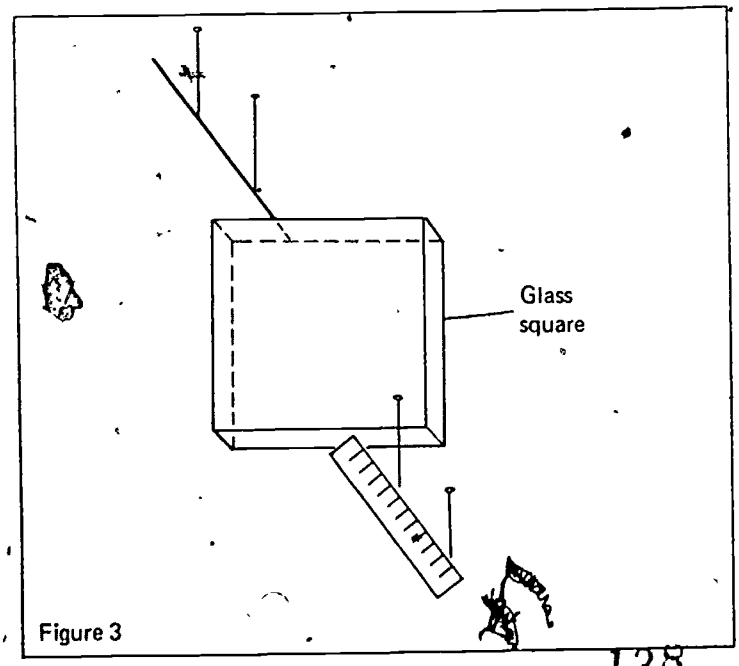

Figure 3

APPARATUS PREPARATION

glass square, 7 cm by 7 cm
These are sold by scientific supply companies for this particular experiment
straight pins
a notebook-size sheet of heavy cardboard

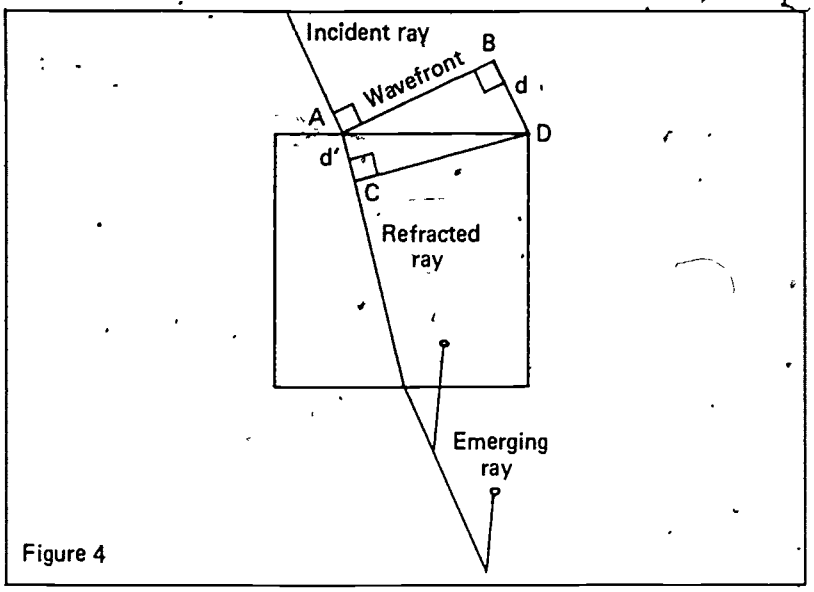

Figure 4

1. On the data worksheet, place a glass square (7 cm X 7 cm) in the position indicated in the diagram, making sure that one of the polished edges of the glass coincides exactly with the top edge of the square on the diagram. With the glass in this position, one of the lines above the glass represents an incident ray of light which is striking the polished edge, and the line perpendicular to it (AB) represents the wavefront of the light at the instant the incident ray is about to enter the glass. Insert 2 straight pins about 3 or 4 cm apart on the line which represents the incident ray. Holding your head so that your eyes are at the same level as the glass, insert 2 more straight pins at the bottom of the diagram so that it appears as if all four pins are on a perfectly straight line while you are looking through the glass (Figure 3).

2. Remove the glass and draw 2 straight lines with the aid of a straight edge to show the path of the light as it traveled through the glass and emerged. Label these lines "refracted ray" and "emerging ray," as shown in the sample diagram (Figure 4).

3. Starting from the upper right corner position of the glass square, draw a line that is perpendicular to the refracted ray. (This line is labeled CD in Figure 4.) This line represents the wavefront of light at a later time—the instant the right end of the wavefront enters the glass.

4. Measure the distances *d* and *d'* on your diagram. Distance d is the distance moved *in air* by a point on the wavefront during the time the wavefront moved between position AB and position CD. Distance d' is the distance moved *in glass* by another point on the wavefront during the *same* time interval. Thus, *d* and *d'* are proportional to the respective speeds of light in air and in glass.

5. On separate sheets of paper, draw similar diagrams but change the angle that the incident ray makes with the glass. Measure distance *d* and distance *d'* for each case.

6. Enter the distance data in the data chart. For each pair of distances, divide the distance *d* by the distance *d'*. Enter the result of this calculation in the data chart. This value is known as the index of refraction of glass and should be between 1.5 and 1.9, depending on the type of glass that is used.

EXPERIMENT 33, REFRACTION

NAME CLASS HOUR

DATA

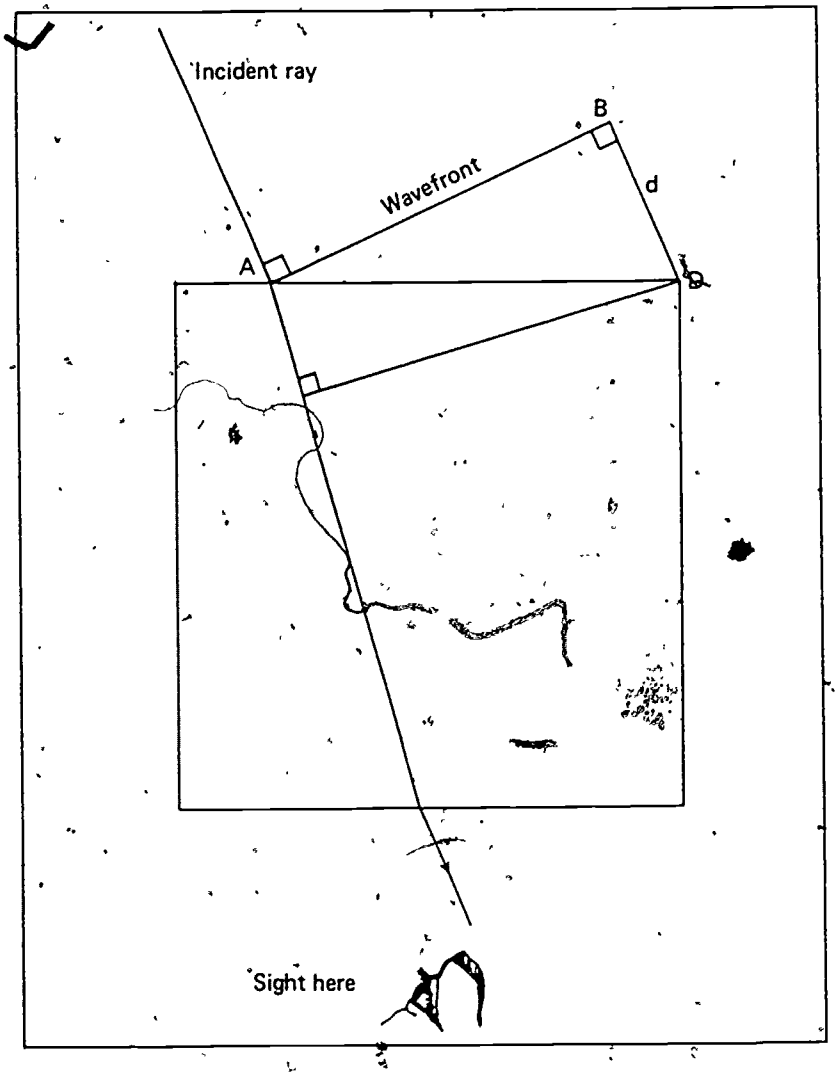

TRIAL	d (cm)	d' (cm)	d/d'
1	2.3	1.5	1.5
2	1.9	1.3	1.5
3	2.5	1.7	1.5

RELATED QUESTIONS AND SUGGESTED ACTIVITIES

1. Ordinary crown glass has an index of refraction of 1.5 and flint glass has an index of refraction of 1.6 to 1.9. Refer to your data and identify the type of glass that you used for this experiment.

Ordinary crown glass

2. If the narrow beam coming from a carbon arc lamp or from a helium-neon laser were to be aimed at your glass square in the direction of the incident ray on your diagram, the light should follow the path through the glass and emerge exactly as you have shown in your diagram. Try this and see how close you are able to come.

The laser beam is right on the line.

Student ingenuity is required to make measurements above and below the surface of water. The handbook value of the index of refraction of water is 1.33.

3. Using a technique that is similar to that used in this experiment, devise a procedure for determining the index of refraction of water. Summarize your procedure, data, and conclusions in the space below.

4. The speed of light in air is 3.0×10^8 m/sec. Using the data that you have obtained in this experiment, calculate the speed of light in glass. (Remember that the speeds of light in air and glass are in the same ratio as the distances d and d'.)

(speed of light in air)/(speed of light in glass) = 1.5

speed in glass = $(3.0 \times 10^8$ m/sec$)/1.5 = 2.0 \times 10^8$ m/sec

The paraffin can be cast in the desired shape with wooden molds.

5. Microwaves are refracted by paraffin in much the same manner as light waves are refracted by glass. If a microwave transmitting and receiving set are available, repeat the procedure that was used for determining the index of refraction of glass, substituting the microwave transmitter for the light source and a paraffin block for the glass, and placing the microwave receiver on the opposite side of the paraffin block. Using different angles of incidence, calculate the index of refraction of paraffin for microwaves.

The index of refraction of paraffin for microwaves is 1.42. Thus, students should find that for every angle of incidence the distance d is 1.42 times as great as the distance d'.

EXPERIMENT • DIFFRACTION AND INTERFERENCE

34

NAME _____ CLASS HOUR _____

LAB PARTNERS: _____ DATE _____

PURPOSE

In this experiment you shall have an opportunity to observe the bending, or diffraction, around edges that occurs when waves pass through a narrow opening, and you shall investigate the interference phenomena which accompany this diffraction.

This experiment should be done by students working in groups of two or three.

Each group should have an opportunity to observe diffraction in a ripple tank and then do quantitative work with a microwave set, a laser, or a sodium flame. The most satisfying results will be obtained with a laser and an inexpensive (less than 25¢) replica diffraction grating. The set-up is simple, and data which yields precise and accurate results is obtained by almost all the students.

APPARATUS PREPARATION

ripple tank
wave generator
paraffin blocks
white paper screen
water

A. DIFFRACTION AND INTERFERENCE IN A RIPPLE TANK

PROCEDURE

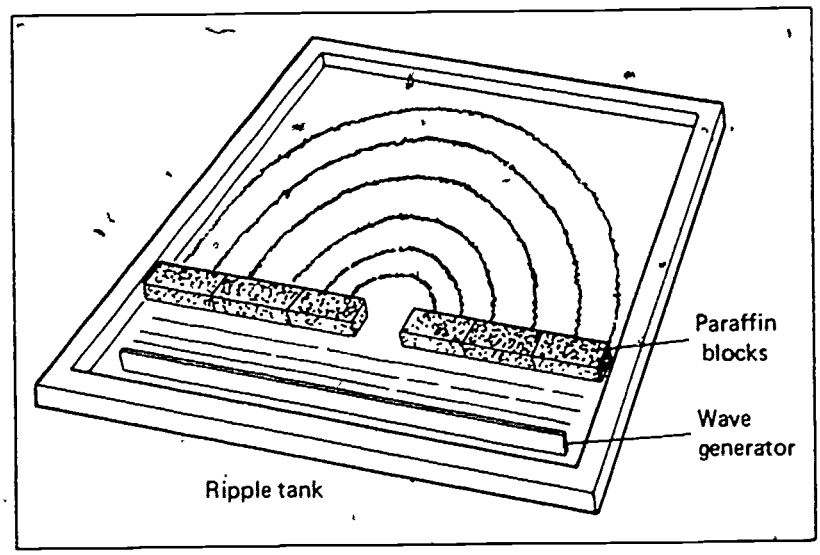

1. Set up a ripple tank with about 0.7 cm of water; make sure that the tank is level. Set up a wave generator at one end of the tank to produce straight waves. Across the center of the tank (as shown in the diagram) place several paraffin blocks with a narrow opening at the center to allow waves to pass through the barrier. Experiment with the size of this opening to find out whether the greatest amount of diffraction (spreading out of waves) occurs as the opening is made wider or as the opening is made narrower. Record your observations.

As the opening between the paraffin blocks is made smaller the amount of diffraction increases.

SUGGESTIONS AND TECHNIQUES

1. Diffraction patterns can be observed in a ripple tank without too much difficulty but a great deal of practice is required to make any quantitative measurements. If time is available, it is usually better spent in measuring the diffraction patterns produced by light waves, from which greater precision and accuracy may be obtained with relatively little practice.

2. Although the distances from the central maximum and the first order diffraction pattern on each side of the maximum should be identical, you may find that these distances differ because of slight misalignments of the equipment or because of faulty sighting techniques. A good procedure is to measure the distances between the central maximum and each of the two first order images and then take the average distance if the two are not identical.

3. When using a laser be very careful that the laser beam does not shine directly into your eye or into the eyes of other students in the laboratory.

4. Special photometers are required to measure the intensity of light found in a diffraction pattern. Ordinary photographic light meters are usually not sensitive enough for this purpose, since fine differences in light intensity are encountered

2. Readjust the paraffin blocks in the barrier to make two narrow openings through which the waves can pass. With this arrangement the waves passing through each of the openings will interfere with each other at the far side of the barrier. Light areas will appear on the ripple tank screen wherever the waves coming from one slit interfere constructively with the waves coming from the other slit. Dark areas will appear wherever the waves from the two sources interfere destructively.

3. Draw a diagram showing the interference pattern which appears on your screen.

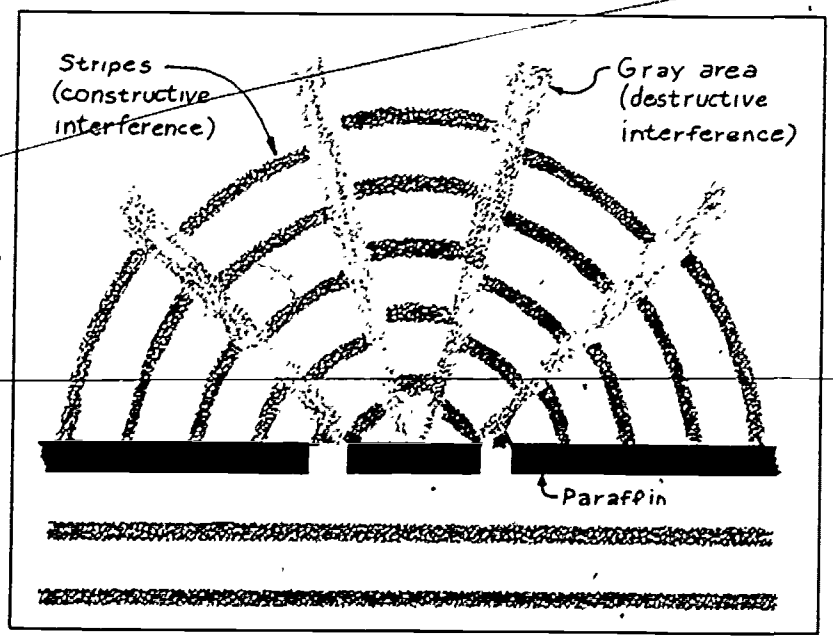

NAME CLASS HOUR

4. Vary the frequency of your wave generator and observe the changes in the interference pattern which results. As the frequency increases (and the wavelength decreases) how is the pattern affected?

As the frequency increases and the wavelength decreases, there are more lines of destructive interference and they are closer together.

5. Keeping the frequency of the wave generator constant, rearrange the paraffin blocks to increase or decrease the distance between the two openings in the barrier Describe the changes that take place in the interference pattern as the two slits are brought closer and closer together.

As the slits in the barrier are moved closer together, there are fewer lines of destructive interference and they are farther apart

B. DIFFRACTION AND INTERFERENCE OF MICROWAVES

PROCEDURE

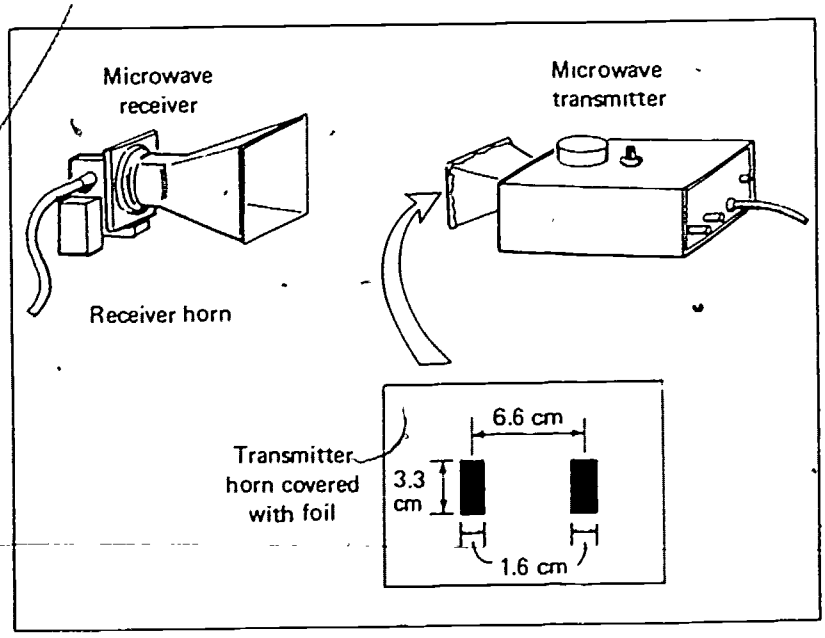

APPARATUS PREPARATION

microwave set
meter stick
sheet of aluminum foil
single-edge razor blade
sticky tape

1. Set up a microwave transmitter and receiver on the laboratory bench with the transmitter and receiver horns about 25 cm apart and facing each other, as shown on the diagram. Adjust the transmitter output or the receiver gain according to the manufacturer's instruc-

tions so that the receiver output meter indicates a full scale reading with the apparatus set up in this position.

2. Cut two slits in a square of household aluminum foil with a sharp, single-edge razor blade. The size of each slit and their spacing are shown on the diagram. Center the slits over the opening in the transmitter horn and hold them in this position by pressing the edges of the aluminum foil around the rim of the horn. Slowly move the receiver horn in a small arc in front of the transmitter, making sure that the distance between the two is always 25 cm. As the receiver is moved near the central axis of the radiation pattern, a marked increase in the received signal strength will be observed. Mark the position of the strongest received signal by sticking a small piece of tape to the laboratory table. This maximum signal is called the central maximum and occurs where the waves coming from the two slits interfere constructively after having traveled exactly the same distances from their sources.

3. Move the receiver approximately 10 cm to the left or 10 cm to the right of the central maximum position until another position of maximum signal strength is located. This maximum is called the first order maximum and occurs where the waves from one slit arrive exactly one wavelength ahead of the waves from the other slit.

4. In the data table record the distance between the transmitter and receiver horns (25 cm in this case) and also record the distance between the central and the first order maximum positions.

5. Calculate the wavelength of the microwaves using the relation

$$\lambda = dx/L$$

where d is the distance between slits (6.6 cm in this instance)

x is the distance between the central maximum and the first order maximum

L is the distance between the transmitter and receiver horns

Record the result of your calculation in the data table.

6. Using a similar procedure to that described above, increase the distance between the transmitter and receiver to 30 and to 40 cm. In each case locate the positions of the central and the first order maxima and record the appropriate distances in the data table. From your data, calculate the wavelength of the microwaves and enter the result in the data table.

DATA

Distance between transmitter and receiver horns (cm)	Distance between positions of central and first order maxima (cm)	Calculated wavelength (cm)
25	11.5	3.0
30	14.0	3.1
40	18.0	3.0

9. DIFFRACTION AND INTERFERENCE USING A HELIUM-NEON LASER

PROCEDURE

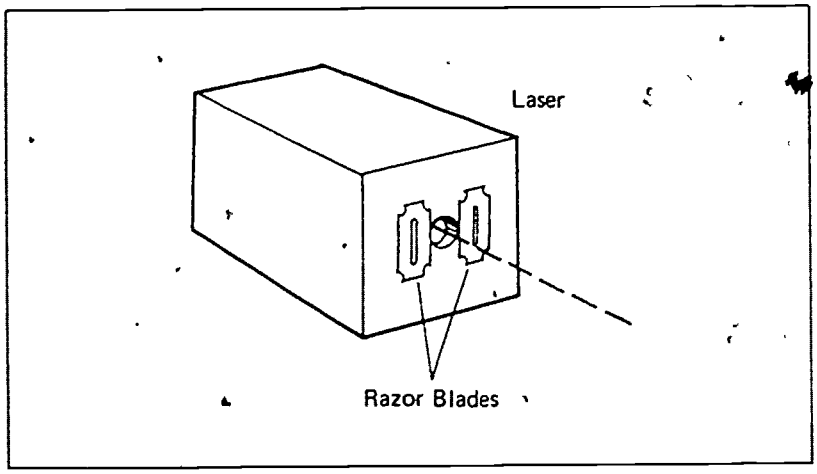

APPARATUS PREPARATION

helium-neon laser

screen

2 razor blades

Any kind of razor blades will work but new, sharp blades produce the cleanest pattern.

magnets, tape, or some other mechanical device to hold razor blades steady

photometer

Special photometers are sold by laser manufacturers for use with lasers. A photography light meter probably will not work for this experiment because it is not sensitive enough to the red light emitted by helium-neon lasers.

diffraction grating (inexpensive acetate plastic replica gratings work well)

1. Demonstrate knife-edge diffraction by aiming the beam of a helium-neon laser at a screen that is approximately 1 meter in front of the laser. Slowly slide the edge of a new razor blade into the side of the laser beam and observe the effect on the screen. If a diverging lens is used to enlarge the beam, it should be possible to observe several light and dark fringes on the screen rather than a sharp-edged shadow of the razor blade which might be expected These fringes are caused by interference between various portions of the wavefront as the light bends around the edge of the razor.

2. Demonstrate single-slit diffraction by shining the laser beam on a screen about 1 meter away and partially blocking the laser beam with two razor blades, one on each side. As the slit between the blades is made narrower and narrower, you should be able to observe a marked change in the width of the laser beam. Record your observations.

As the razor blades are moved closer together, the laser beam spreads out more and more. When the blades are very close together, the pattern on the screen looks like a series of dashes, with those in the center the brightest.

3. Pass the laser beam through a very narrow slit made by placing two razor blades close together, then enlarge the beam using a diverging lens and observe the pattern which falls on a screen about 1 meter away. The light and dark stripes, or fringes, which are

observed are caused by interference among the various portions of the wavefront which pass through the slit and are diffracted by the edges. Upon closer inspection these interference fringes will be seen to vary in brightness. Using a sensitive photometer in a darkened room, record the intensity variations that occur at 1-cm intervals as the photometer is moved slowly across the screen from one edge of the pattern to the other. Plot this data on a graph showing distance along the horizontal axis and the photometer reading along the vertical axis. (If the pattern happens to be very small, it may be necessary to record the intensity variations at intervals of less than 1 cm.)

4. Place a screen 1 meter in front of the laser aperture. Turn on the laser and mark the position on the screen where the laser beam falls. Place a diffraction grating over the laser aperture and observe the additional bright spots which appear on the screen due to diffraction. A bright spot should appear at the original marked position, and additional spots should appear to the right and to the left of the marked position. The marked position is called the central maximum, starting from this place the other bright spots are called the first order maximum, second order maximum, third order maximum, and so forth. Measure the distance between the central maximum and the first order maximum on each side. Record these distances in the data table. Also measure and record the distances between the laser aperture and the first order maximum on each side

Ideally, the distances to the right and left of the central maximum should be identical. In practice, they will not be identical because it is difficult for students to arrange the laser beam and the screen at perfect right angles to each other To minimize the error, distances to the right and left are averaged.

Inexpensive acetate plastic replica gratings have 1.90 x 10^{-6} m spacings between slits. Other gratings usually have the number of lines per cm given. The slit spacing in centimeters is the reciprocal value. (Inexpensive diffraction replica gratings made of acetate plastic film usually have 13,400 grooves per inch. This is equivalent to 5,276 grooves per centimeter. Thus the distance between adjacent grooves (d) is 1.90 x 10^{-4} cm, or 1.90 x 10^{-6} m.)

5. Record the distance between adjacent slits on the diffraction grating. This will be given on the grating or by your instructor.

6. Calculate the wavelength λ of the laser light by using the relation

$$\lambda = d \frac{x}{L}$$

where

d is the distance between adjacent slits on the diffraction grating

x is the distance between the central maximum and the first order maximum

L is the distance from the laser to the first order maximum on the screen

Record the result of your calculation in the data table.

7. According to the handbooks, the wavelength of the light emitted by a helium-neon laser is 6.328 X 10^{-7} meter. Compare this with the value that you obtained and calculate your percentage error.

8. Repeat the above procedure several times, using different distances between the laser and the screen.

NAME CLASS HOUR

DATA

	Distance from edge of pattern (cm) x =	Intensity I =
1	0	0.0
2	1	0.5
3	2	0.5
4	3	0.0
5	4	1.0
6	5	4.0
7	6	10
8	7	14
9	8	16
10	9	10
11	10	2
12	11	0.0
13	12	0.5
14	13	0.5
15	14	0.0

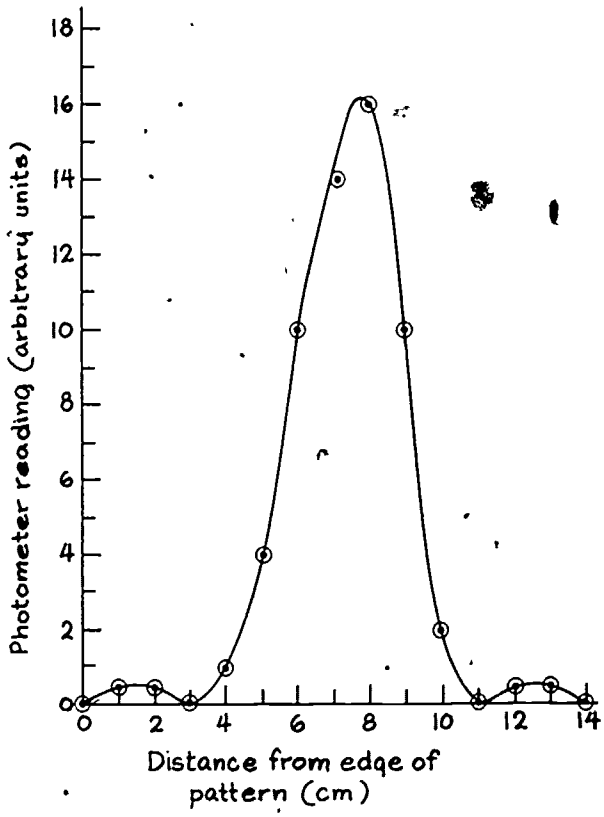

	Distance between laser and first-order maximum on screen		Distance between central maximum and first order maximum		Calculated wavelength (m) L(W) = x 10^{-7}	% error E =
	on left (m) L(L)	on right (m) L(R)	on left (m) X(L) =	on right (m) X(R) =		
1	1.057	1.035	0.352	0.347	6.35	0.3%
2	1.068	1.086	0.358	0.360	6.33	0%
3						
4						
5						
6						
7						
8						

In calculating the wavelength, students should use the average of the distances measured on the left and right sides.

D. DIFFRACTION AND INTERFERENCE OF LIGHT FROM A SODIUM FLAME

PROCEDURE

APPARATUS PREPARATION

Bunsen burner
asbestos collar
salt water solution
wire to secure collar
meter stick
diffraction grating (inexpensive acetate plastic replica gratings work well)

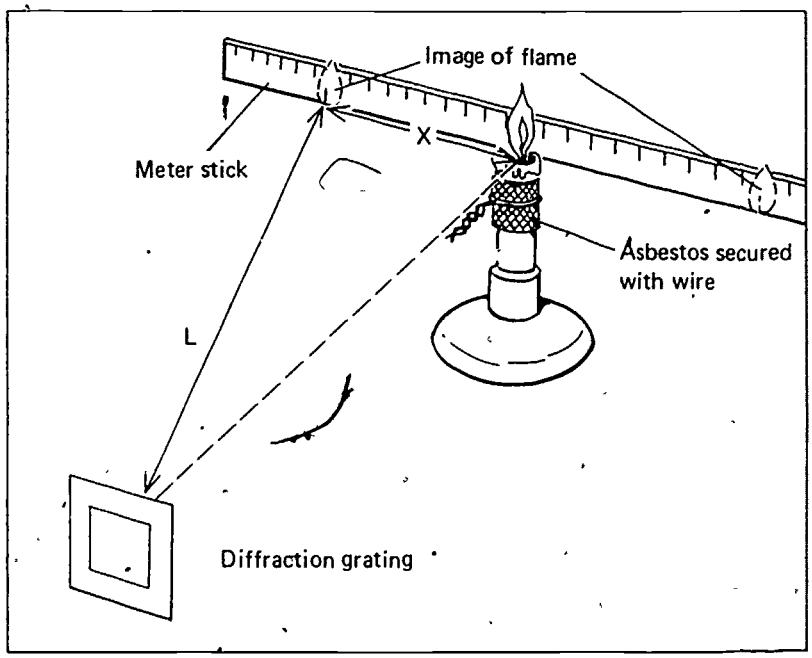

Inhaling asbestos dust is harmful to the lungs. Instead of the asbestos collar, you might wish to substitute a 15 cm length of nichrome wire with one end bent into a loop having a diameter of about 0.5 cm. A sodium flame is obtained by dipping the loop into a container of salt water and then heating the loop with the bunsen burner. Refill the loop with salt water as often as necessary.

1. Soak a small square of asbestos in a solution of salt water. When the asbestos is thoroughly wet, wrap it around the top of a Bunsen burner, as shown in the diagram, and secure it with a piece of wire.

2. Light the Bunsen burner and adjust the barrel so that a bright yellow sodium flame is produced as the salt on the asbestos is heated.

3. Stand about one meter away from the flame and look at it through a diffraction grating. Diffracted images of the flame should appear several centimeters to the left and right of the flame itself.

4. Have your laboratory partner hold a meter stick just behind the flame, as shown in the diagram. Ask your partner to run a pencil along the meter stick until it appears to coincide with the nearest image that appears to the right or left of the flame itself. Record the distance between the pencil and the flame and the distance between the pencil and the grating. Repeat for the opposite nearest image.

5. Calculate the wavelength λ of sodium-light using the relation

$$\lambda = d\frac{x}{L}$$

where d is the distance between adjacent slits on the diffraction grating

x is the distance between the Bunsen burner flame and the position along the meter stick where the nearest image appears

NAME CLASS HOUR

is the distance between the diffraction grating and the position along the meter stick where the nearest image appears

Record the result of your calculation in the data table.

6. The yellow light in a sodium flame actually consists of light of two very slightly different wavelengths. The accepted values of these wavelengths are 5.896×10^{-7}m and 5.890×10^{-7}m. Using the average value, 5.89×10^{-7}m, compute your percentage error.

DATA

Distance between adjacent slits on diffraction grating d = 1.90×10^{-6} m

TRIAL	Distance between flame and nearest image			Distance between grating and nearest image			Calculated wavelength (m) L(w)	% error E =
	Left (m) X(L) =	Right (m) X(R) =	Average (m) X =	Left (m) L(L) =	Right (m) L(R) =	Average (m) L =		
1	0.101	0.114	0.107	0.337	0.335	0.346	5.88	0.2%
2	0.122	0.143	0.132	0.420	0.440	0.430	5.84	1%
3								

150

RELATED QUESTIONS AND ACTIVITIES

1. Observe a long thin lamp, such as a showcase lamp, through a diffraction grating. Set the lamp base down on a table and notice the multiple interference patterns that are formed at the sides of the lamp as you stand about 2 meters away and look at it through the grating. Knowing that red light has a longer wavelength than green light, predict the color of the image which will be formed closest to the lamp. Check your predictions by holding pieces of red and green cellophane in the light path between the lamp and the diffraction grating.

The longer red wavelengths should produce a diffraction pattern with maxima that are spaced farther apart than the shorter green wavelengths, so the green image should be closer to the lamp. This is confirmed by observation.

2. Assume that there are three unidentified diffraction gratings, each having a different number of lines per centimeter. How could you rank the gratings in order of number of lines per centimeter without using a microscope?

Observe a source of monochromatic light or shine a laser beam through the gratings. The grating with the greatest number of lines per centimeter will produce a diffraction pattern with maxima that are the farthest apart.

EXPERIMENT 35 **IMAGES AND CONVERGING LENSES**

NAME: CLASS HOUR.

LAB PARTNERS: DATE

PURPOSE

In this experiment you shall study the images that are produced by converging lenses.

This experiment should be done by students working as individuals or working in pairs.

A. FINDING THE FOCAL LENGTH OF A DOUBLE CONVEX LENS

The main difficulty that students experience is in making judgements as to when an image is in the best focus. This judgement will vary somewhat from student to student.

PROCEDURE

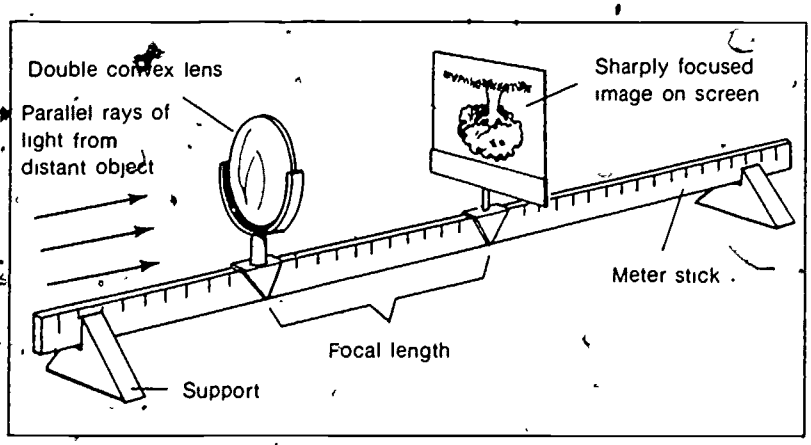

APPARATUS PREPARATION

double convex lens with a diameter of about 3 cm and focal length of about 10 cm
optical bench with lens holders and screen holders
screen (a stiff white index card is acceptable)

The simplest type of optical bench is a meter stick and accessories such as end supports, lens holders, and screen holders. These are listed in the catalogs of most scientific supply companies.

The focal length of a lens is the distance from the lens to the point where parallel rays of light from distant objects are in sharp focus.

1. Set up the apparatus shown in the diagram by mounting a double convex lens and a cardboard screen on a meter stick.

2. Select a distant object such as a house, a tree, or even the sun itself.

3. Aim the meter stick at the selected object so that light from the object passes through the lens and falls on the screen.

4. Move the screen or the lens along the meter stick to focus the light rays on the screen and produce the sharpest image of the distant object. When this has been done, find the positions of the lens and the screen on the meter stick as precisely as possible and record them in the data chart.

5. Repeat the above procedure for two more trials, each time selecting a different initial position on the meter stick for the lens. Record these position data in the chart also.

6. Calculate the focal length of the lens for each trial by subtracting the position of the lens from the position of the screen.

SUGGESTIONS AND TECHNIQUES

1. Although the sun itself makes an excellent object for finding the focal length of a lens, be especially careful that the focused rays of the sun on the cardboard screen do not scorch the cardboard or start a fire.

2. The right angle that is formed by the corner of a small file card or a stiff piece of paper can be helpful in locating the exact position of the front of the bulb with respect to the meter stick. Try holding the card so that one edge lies along the top of the meter stick and the adjacent edge is pressed against the front of the bulb.

3. As the object distance is made shorter and approaches the focal length of a convex lens, you will find that it is extremely difficult to obtain an image. Do not waste too much time in trying to find and observe the image under these conditions.

4. To find the relative size of the object and image in Part B, try pasting a 1-cm length of narrow tape on the front of the bulb. If one end of this tape is pointed, it will help you tell whether the image is erect or inverted. An alternate technique is to draw an arrow 1 cm long on the front of the bulb, using a felt-tip pen.

The values should be identical in each case but may vary somewhat because of experimental errors.

7. In the last two columns of the data chart, tell whether the image is erect or inverted and whether it is larger than, smaller than, or the same size as the actual object.

DATA

TRIAL	Position of lens (cm) X(L) =	Position of screen (cm) X(c) =	Focal length (cm) F =	Image erect or inverted? (E or I)	Image size (LG) Larger (Sm) Smaller (=) same as object
1	20.00	30.20	10.20	inverted	smaller
2	30.00	40.15	10.15	inverted	smaller
3	40.00	50.25	10.25	inverted	smaller
4					

NAME CLASS HOUR

B. IMAGES OF NEARBY OBJECT FORMED BY A CONVEX LENS

PROCEDURE

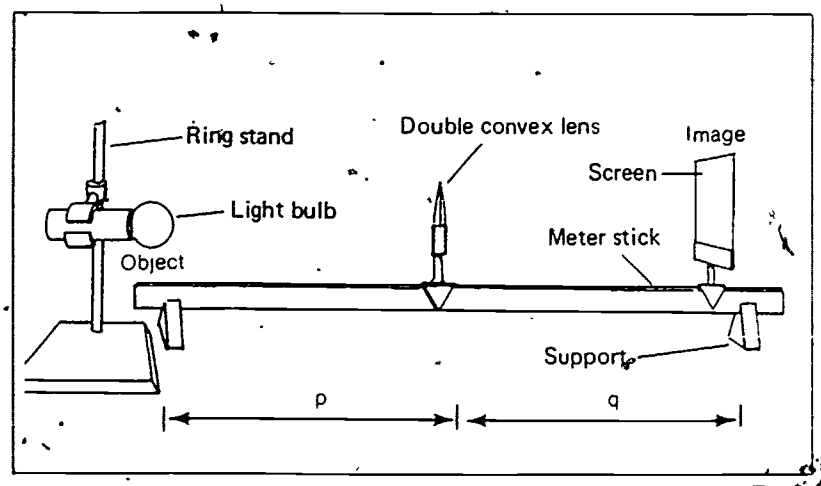

APPARATUS PREPARATION
In addition to the apparatus of Part A, a luminous object of known height is needed. A small 7 W, 120 V lamp mounted on a ringstand is ideal. Candles are not recommended because the flickering flame is difficult to focus, and there is the possibility of a student's long hair catching on fire.

The characteristics of the image and its distance from the lens will be found to depend on the focal length of the lens and the object distance. To see how these are interrelated, proceed as follows:

1. Place a small electric light bulb in a socket mounted on a ringstand, as shown in the diagram. The bulb will be used as an object.

2. Mount a double convex lens of known focal length (Part A of this experiment) and a cardboard screen on a meter stick

3. Place the lens at a distance of about two focal lengths plus 5 cm from the bulb.

4 Turn on the bulb. Move the screen to a position where the image of the bulb and the fine printing giving the manufacturer's name and the voltage are in sharp focus. In the data chart, record the positions of the bulb, lens, and screen.

5 Calculate the distance between the bulb and the lens (object distance) and the distance from the lens to the screen (image distance).

6. In the last column of the data chart, describe the image by telling whether it is erect or inverted, and whether it is larger or smaller than the actual object

7. Perform several additional trials, each time decreasing the object distance by 2 cm until the object is less than one focal length from the lens Record these data in the chart.

8. Make a graph of image distance vs. object distance by plotting the data in the chart.

See sample graph at top of next page.

DATA

Lens focal length f = 10.2 m

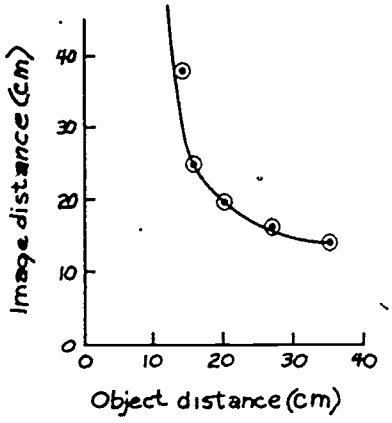

TRIAL	Position of object (cm) X(O) =	Position of lens (cm) X(L) =	Position of image (cm) X(I) =	Object distance (cm) p =	Image distance (cm) q =	Image description (Lg)(Sm) (=)
1	0	35.0	49.1	35.0	14.1	SM
2	0	26.9	43.0	26.9	16.1	SM
3	0	20.4	39.6	20.4	19.2	=
4	0	16.0	40.9	16.0	24.9	LG
5	0	14.0	51.6	14.0	37.6	LG
6	0	10.2	none	10.2	?	?
7	0	8.5	none	8.5	?	?

RELATED QUESTIONS AND SUGGESTED ACTIVITIES

1. Referring to your data for a convex lens, tell how the image distance changes as the object distance is decreased.

As the object distance is decreased, the image distance increases.

2. Using the graph you made in Part B of this experiment, predict the image distance when the object distance is exactly twice the focal length.

According to the graph, the image distance will be 19.5 cm

According to theory, the image and object distances are identical when the object distance is twice the focal length. The discrepancy here may be due to incorrect measurement of the focal length or of the object and image distances.

Try this experimentally on your apparatus and see how close your prediction was.

Experimentally, the graph is correct.

3. Referring to your data for a convex lens, tell how the image size changes as the image distance increases.

As the image distance increases, the height of the image also increases.

155

EXPERIMENT • IMAGES AND DIVERGING LENSES

36

NAME CLASS HOUR

LAB PARTNERS: DATE

PURPOSE

After having experimented with converging lenses this experiment will give you the opportunity to observe similarities and differences in the effects of diverging lenses in forming images.

PROCEDURE

A. FINDING THE FOCAL LENGTH OF A DIVERGING LENS

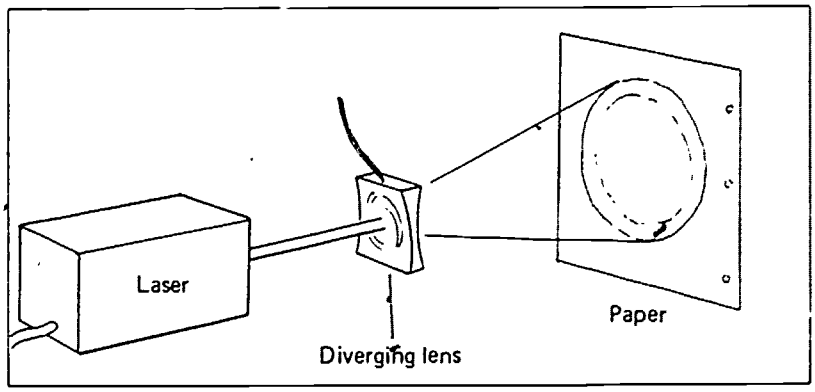

1. Place a low powered helium-neon laser on a table, being careful that it is not pointing at any mirrors or into the eyes of anyone in the room

2. Turn on the laser and place a diverging lens in the laser beam. You will observe that the beam is very narrow as it comes out of the laser but after going through the lens, it spreads out into an ever widening cone.

3. Hold a sheet of notebook paper against the lens. With a sharp pencil, trace the outline of the red spot made by the laser beam as it emerges from the lens.

4. Move the paper 5 cm further away from the lens and again trace the outline of the spot that is produced. Repeat this procedure, increasing the distance between the lens and the paper by 5-cm intervals until the spot completely fills the paper.

5. Measure the diameter of the laser beam for each position of the paper and record these data in the data chart.

6. Plot a graph of beam diameter vs. distance between paper and lens.

7. By extending your graph line (extrapolating), find the distance from the lens at which the beam diameter would be zero. This distance is the focal length of the diverging lens. Record it in the data chart.

APPARATUS PREPARATION

helium-neon laser
diverging lens
sheet of notebook paper
photometer

Students will have some difficulty in measuring the diameter of the laser beam because the beam decreases in intensity rapidly near the edges, making the edge fuzzy. For this reason when one wishes to strive for better precision, the beam intensity is measured with a photometer at the beam center. Then the half-power points are located at several places around the circumference where the beam is half as bright. The beam diameter is then defined as the diameter between half-power points.

8. Repeat the procedure for an additional trial or two or have your lab partners do it independently and compare the results.

DATA

TRIAL	Distance between lens and paper (cm) X =	Beam diameter (cm) D =
1	5	1.3
2	10	2.3
3	20	4.7
4	30	8.0
5	40	11.0
6	50	13.1
7	60	16.4

Focal length of lens F = -0.8 cm

B. FORMING IMAGES WITH A DIVERGING LENS

1. Using a brightly lit source as an object, see if you can focus an image on the screen using the diverging lens. (If you encounter any difficulty, ask your instructor for help.) Record your observations.

It is impossible to obtain a real image with a diverging lens

2. Place your eye near the lens and look at the object through the lens. Instead of seeing the object you will see an image that is a different size than the object.

a. Is the image larger or smaller than the object?

smaller

b. Is the image erect or is it inverted? *erect.*

157

EXPERIMENT 36. IMAGES AND DIVERGING LENSES

NAME CLASS HOUR

1. Why is it impossible to find the focal length of a diverging lens using the techniques given in Part A of this experiment?

A diverging lens spreads out light. The radius of curvature of the wavefront increase rather than decreasing to a focus.

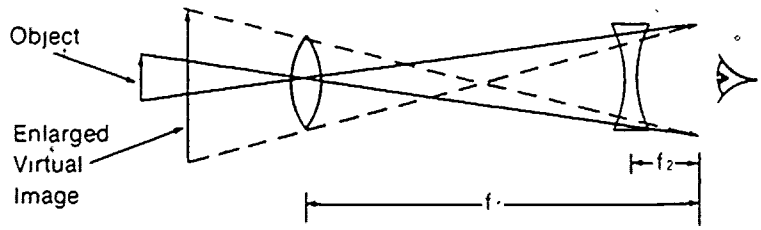

Optical Arrangement of the Galileo Telescope

2 Make a telescope using a long focal length converging lens and a short focal length diverging lens. Galileo discovered the secret of this combination, which is that the magnification it produces is given by the ratio, -F1/F2, where: F1 is the focal length of the objective and F2 is the focal length of the ocular. Since the diverging lens always has a negative focal length, the magnification will be positive, indicating that the image is erect. Try this and record your observation below

EXPERIMENT • STANDING WAVES

37

NAME: CLASS HOUR:

LAB PARTNERS: DATE

PURPOSE

In this experiment you shall create standing waves in different types of materials and learn how to find the wavelength by measuring the distance between adjacent nodes.

PROCEDURE

The general procedure for creating standing waves in the laboratory is to send out a series of pulses at a constant frequency and then, at some distance away from the source, reflect them back so that they meet and interfere with the subsequent pulses. This creates regions where there is maximum vibration, these regions are separated by points of little or no vibration, called nodes. Standing waves reach their greatest amplitude when the effective distance between the source and reflector is a specific fraction of the wavelength or a multiple of the wavelength.

This experiment should be done by students working in pairs.

APPARATUS PREPARATION

doorbell without gong or tape timer
source of 6V AC, such as a power supply or a stepdown bell transformer. A 6V battery may also be used.
meter stick
length of string 1 to 2 m long
set of hooked standard masses or a small pan and sand or gravel that can be attached to the end of the string
triple beam balance to measure the mass of the pan and load

A. STANDING WAVES ON A STRING

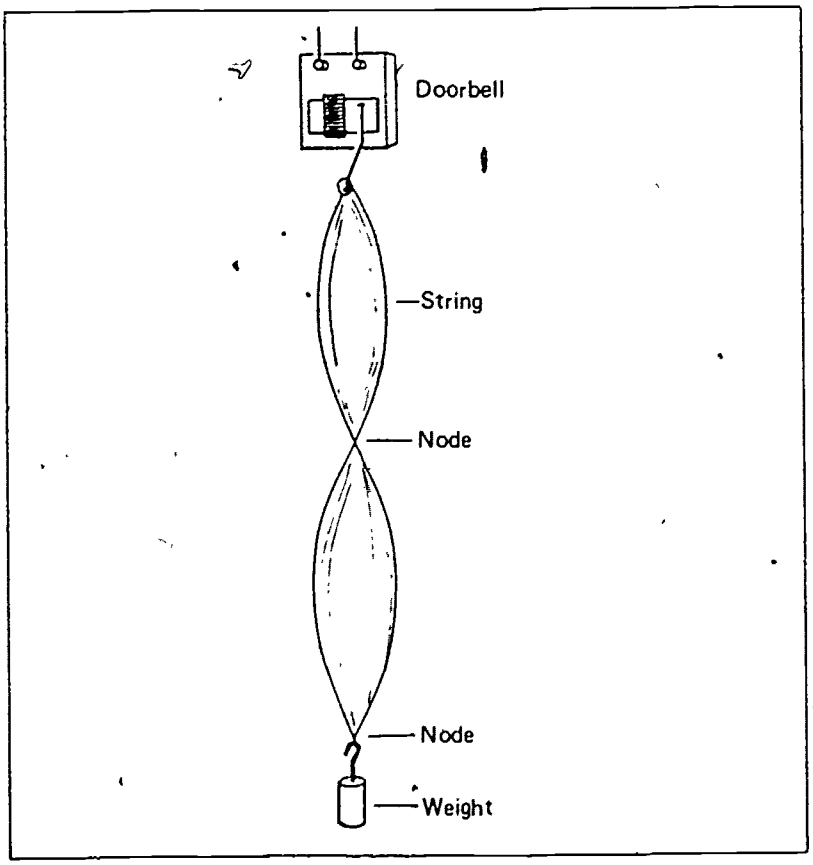

SUGGESTIONS AND TECHNIQUES

1. Almost any type of string may be used to produce standing waves but some work better than others to produce well defined nodes. If any difficulty is experienced, try making the string a bit longer or shorter.

2. When producing standing waves in an air column with a tuning fork, plastic cylinders are recommended because they are inexpensive and will not shatter if hit accidentally with a vibrating tuning fork. If glass cylinders are used, be very careful that the vibrating tuning fork does not touch the lip of the cylinder.

3. The standing waves in an air column closed at one end will be most pronounced when the length of the air column is approximately 1/4, 3/4, or 5/4 that of the sound wave. The value will vary somewhat with the diameter of the cylinder that is used. Regardless of the cylinder diameter, however, the distances between successive nodes (or antinodes) will always be *exactly* one-half the wavelength of the sound wave.

4. Microwave experiments give the best results when done in a large room. If the microwave transmitter is aimed at nearby walls, unwanted reflections may obscure the desired signals. Always refer to the manufacturer's instructions and follow the recommended alignment and warm-up procedures.

1. Attach a length of string approximately 1.5 meters long to the clapper of a doorbell, and fasten the doorbell to an overhead support which is sufficiently high to prevent the bottom of the string from touching the floor. It is a good idea to remove the gong from the bell to preserve the sanity of those that happen to be in the immediate vicinity while the device is operating.

2. Attach small weights to the bottom of the string until the string vibrates in sections with clearly defined nodes when the doorbell is operating. Adding weights increases the tension of the string and causes the waves to move faster. This will increase the wavelength along the string without affecting the frequency of vibration to any marked extent.

3. With a meter stick, measure the distance between 2 adjacent nodes. This distance is equal to one half the wavelength

4. Change the tension by putting either lighter or heavier weights at the end of the string until a different number of vibrating segments are produced with clearly defined nodes. In each case record the total amount of weight that is supplying the tension and the wavelength of the standing wave.

TRIAL	Weight (newtons) w =	Distance between nodes (meters) d =	Wavelength (meters) L(w) =
1	.029	.033	0.66
2	0.44	0.50	1.00
3	1.32	1.00	2.00
4			
5			

NAME CLASS HOUR

B. STANDING WAVES OF SOUND IN AN AIR COLUMN

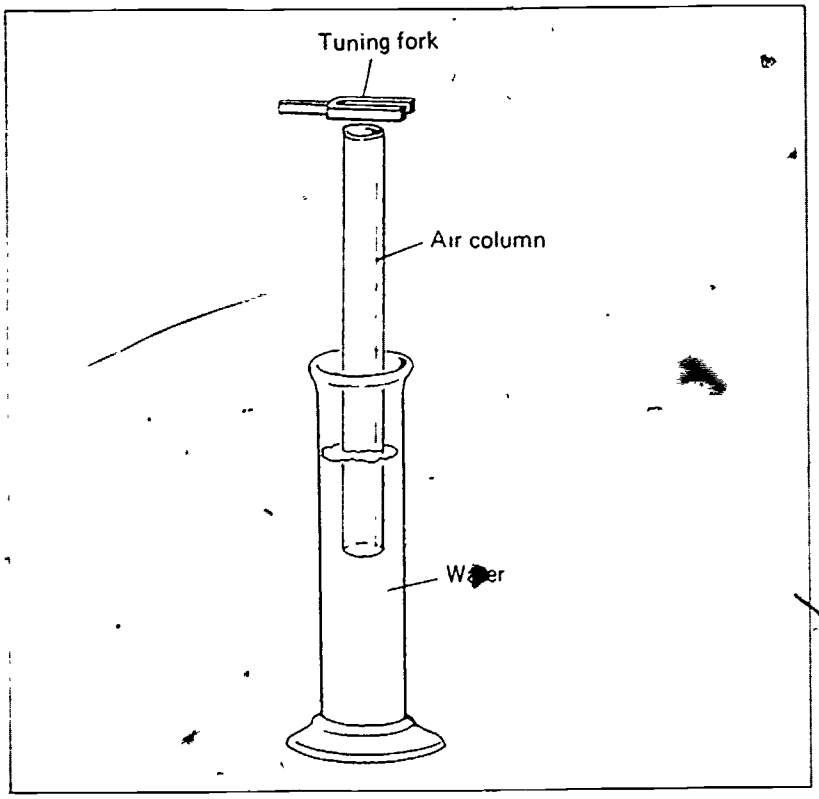

APPARATUS PREPARATION

plastic tube such as those used to hold golf clubs—cut length to 0.5 m

glass cylinder (about 0.5 m long) closed at one end and filled with water

meter stick

tuning forks of different frequencies between 512 and 256 Hz

1 Place a long plastic tube in a cylinder of water Hold a 512-Hz tuning fork over the top of the plastic tube and listen to the sound. Raise or lower the tube in the water to change the length of the air column that the sound must travel through before being reflected

2 Record the lengths of the tube above water when the sound is at its loudest. With a 512-Hz tuning fork, these lengths will differ by approximately 15 to 20 cm, depending upon the air temperature in the laboratory.

3 In a standing wave, the distance between any two adjacent nodes (or antinodes in this experiment) is equal to one half the wavelength. Calculate the wavelength of the sound.

4 Repeat the above procedure, substituting a tuning fork of a different frequency, and calculate the wavelength of the sound that it produces

TRIAL	1	2	3	4
Frequency of tuning fork f	512 Hz	384 Hz		
Lengths of air column when antinode is produced at top (meters) L	0.152	0.210		
	0.481	0.664		
Calculated wavelength of sound (meters) L(w) =	0.658	0.908		

Sample calculation of wavelength:
$\lambda = 2(0.481\ m - 0.152\ m)$
$= 0.658\ m$

C. STANDING WAVES PRODUCED BY A MICROWAVE TRANSMITTING AND RECEIVING SET

APPARATUS PREPARATION

microwave transmitter and receiving set
reflector, at least 30 cm by 30 cm (can be made by covering cardboard with household aluminum foil)
meter stick

Follow the manufacturer's instructions for operating and tuning the microwave set.

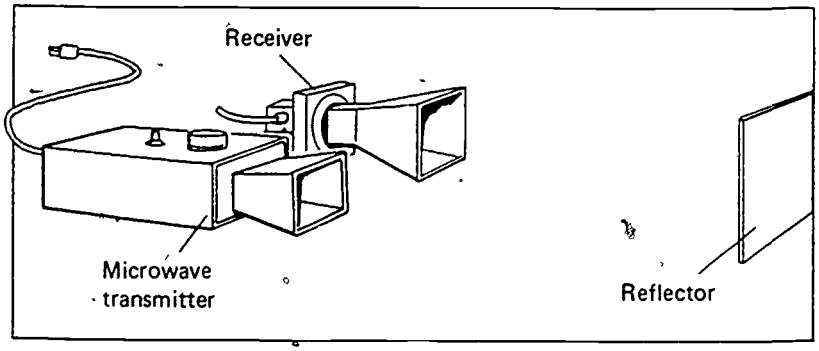

1 Set the microwave transmitter and receiver on a laboratory bench so that they are side by side and are both pointing in the same direction.

2. Approximately 1 meter in front of the apparatus place a large microwave reflector upright on the laboratory bench. This reflector could be a large silvered mirror, a sheet metal plate, or a large sheet of aluminum wrapping foil that is stapled to a flat sheet of cardboard for rigidity.

3. With the microwave apparatus operating, slowly move the reflecting plate toward or away from the transmitting apparatus. As the reflector is moved, the receiver will indicate variations in the microwave intensity as various portions of the standing wave are received. Record the distance between the reflecting plate and the receiver when there are either nodes (no sound) or antinodes (maximum sound) at the receiver. The distance between successive nodes or antinodes should be approximately 2 to 4 cm, depending upon the frequency of the particular microwave apparatus.

4. Calculate the wavelength of the microwaves, remembering that the distance between adjacent nodes or between adjacent antinodes is equal to one half the wavelength

	Distance between Reflector and Receiver (cm)	
TRIAL	Node at receiver X(N) =	Antinode at receiver X(A) =
1	100.50	101.26
2	102.02	102.79
3	103.53	104.30
4	105.05	105.80
5	106.58	107.33

Average distance between nodes d(N) = 1.52 cm

Average distance between antinodes d(A) = 1.52 cm

Wavelength L(W) = 3.04 cm

NAME. CLASS HOUR

RELATED QUESTIONS AND SUGGESTED ACTIVITIES

1. Compare the wavelength of the vibrating string found by measuring the distance between nodes with the theoretical wavelength calculated from the equation

$$\lambda = \frac{\sqrt{FL/m}}{f}$$

where: λ is the wavelength (in meters)

F is the weight at the bottom of the string (in newtons)

L is the total length of the string (in meters)

m is the mass of the string (in kg)

f is the frequency of the doorbell (in Hz). this is about 60 Hz and can be measured precisely with a hand stroboscope.

Sample calculation:
$F = 0.44\ N$
$L = 1.00\ m$
$m = 3.1 \times 10^{4}\ kg$
$f = 60\ Hz$

Substituting these values into the expression for λ gives
$\lambda = 0.63\ m$

TRIAL	1	2
Wavelength by measuring between nodes (meters) L(W) =	0.66 m	1.00 m
Wavelength by substitution in equation (meters) L'(W) =	0.51 m	0.63 m
Percent error E =	29%	43%

2. The speed of sound in carbon dioxide is less than it is in air Predict how the wavelength of sound would change if the cylinder were filled with carbon dioxide instead of air. Check your predictions by trying it. Carbon dioxide can be obtained from cylinders in the chemistry lab or by dropping some Dry Ice into the water at the bottom of the cylinder.

Prediction *The wavelength will be less in carbon dioxide.*

Experimental results *It was confirmed that the wavelength was less,*

Percent Error *but quantitative results were not obtained.*

3. Microwaves from FM radio stations create standing waves as they bounce from wall to wall in a school building which has steel frame construction. Measure the wavelength of the broadcasts with the aid of a small, battery-operated FM transistor radio. Tune it to a weak station near the lower end of the dial and note the changes in volume as you walk about the room. Mark the locations in the room where the sound is the loudest. These are the antinodes of the

standing waves, and the distances between adjacent antinodes should be fairly equal. Find the wavelength by measuring the distance between adjacent antinodes in meters, and multiplying the result by two. Next, calculate the frequency of the station in hertz by dividing the speed of radio waves (3.0×10^8 m/sec) by the wavelength in meters. Check the frequency by looking at the dial markings of the radio or by verifying the station's frequency and call letters. Repeat this for a station at the high end of the dial. Record your results.

4. Set up an experiment to make standing waves in a ripple tank. Obtain data that will prove that the distance between adjacent nodes is half the wavelength. Record your procedure and your complete data.

EXPERIMENT • ELECTRIC FIELDS

38

NAME _____ CLASS HOUR _____

LAB PARTNERS: _____ DATE _____

PURPOSE

In this experiment, the concept of electric field will be developed by investigating the space between a pair of electrodes that are connected to a source of direct current.

PROCEDURE

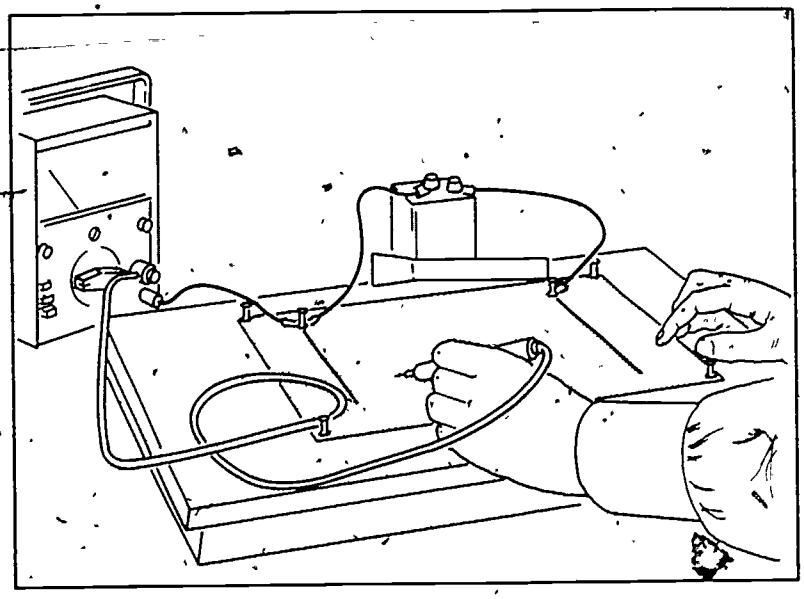

Electrodes are drawn on a special sheet of carbonized paper with silver ink. When a low-voltage dc power supply is connected across the electrodes, an electric field is set up and there is a small amount of current through the paper. The carbonized paper is probed with a vacuum-tube voltmeter or other high-impedance voltmeter to show how the voltage is distributed in the space between the electrodes.

1. About halfway down a sheet of carbonized paper, at the left side, draw a small circle with silver ink. Draw an identical circle at the right side of the paper.

2. Fasten the sheet of carbonized paper to the plotting board, using a tack at each corner.

3. Connect the terminals of a battery (3 to 10 volts) to the electrodes, using a tack to make contact between the battery wires and each electrode.

4. Connect the negative lead of a dc voltmeter to the negative electrode. Probe the carbonized paper with the positive lead to find the places on the paper where the meter will indicate 1.0 volt.

It is strongly recommended that students do this experiment individually rather than in pairs or in larger groups. When one student is working with the measuring equipment, there is very little opportunity for lab partners to contribute productively.

Although the consumable supplies are inexpensive, a high-impedance voltmeter is needed for each student. Unless these meters are available in sufficient quantities, it is unlikely that an entire class can perform this experiment during the same class period.

APPARATUS PREPARATION

The carbonized paper and silver ink pen illustrated here are available from Pasco Scientific. Other suppliers may have somewhat different materials which can also be used in this experiment.

2 sheets of specially prepared carbonized paper
1 liquid silver pen
6 tacks
1 battery, 1.5 to 10 Vdc
4 leads to battery and voltmeter
1 vacuum-tube or other high-impedance voltmeter

Also, refer to the article "Electric Field-Plotting Apparatus by William B. Lynch in the May 1981 THE PHYSICS TEACHER. He proscribes inexpensive materials for doing this experiment.

SUGGESTIONS AND TECHNIQUES

1. Special sheets of carbonized paper and silver ink pens have been developed by scientific supply companies for this experiment. It is not likely that ordinary carbon paper will work.

2. The voltage of the battery is not important for this experiment. It is advisable, however, that a large size battery be used because a small battery cannot maintain a steady voltage when small amounts of current are drawn through the carbonized paper for extended periods of time. Most laboratory dc power supplies may be used in place of batteries.

3. Clean the silver pen immediately after each use to prevent it from clogging.

4. If the wires that are used to connect the battery to the electrodes become dull and corroded with use, shine them with sandpaper or emery cloth to assure good electrical contacts.

5. When drawing lines with silver ink, it is a good idea to p[illegible]em close to the center of the sheet of paper so that the [illegible]u near the edges of the electrodes can be explored. At the same time, the electrodes should be drawn far enough apart so that there is ample room to make measurements in the area between the electrodes.

6. Use a hard surface backing when drawing electrodes with a silver ball point pen. A soft backing will result in erratic action of the pen and will cause indentations in the paper.

5. On the paper, use a colored pencil or wax crayon to draw a continuous line connecting all of the points where the voltage was 1.0 volt.

6. Repeat steps 4 and 5 for all places where the voltage is 2.0 volts, 3.0 volts, and so forth until the positive electrode is reached.

7. The lines that you have drawn on the carbonized paper are called *lines of equipotential* in the electric field between the two electrodes. Describe the pattern of lines.

The lines run across the paper from top to bottom. They curve around the electrodes.

8. On a fresh sheet of carbonized paper, draw a pair of parallel vertical lines with silver ink, one in the left half of the paper and the other in the right half. Connect the battery to the electrodes and repeat the procedure of steps 4 through 7 to find the pattern of equipotential lines between the electrodes. How does this pattern differ from the first one?

The equipotential lines are now parallel and equally spaced.

NAME CLASS HOUR

9. Make up your own experiment by changing the shape, size, or distance between electrodes. Predict the pattern that will be formed and then test your predictions by probing the field with a voltmeter. Record your predictions and test results.

For this activity to be worthwhile, insist that the predictions be carefully written out in advance of the measurements.

RELATED QUESTIONS AND SUGGESTED ACTIVITIES

1. The strength of an electric field is measured in units of volts per meter. The field strength at a point is found by selecting a second point fairly close to the first and dividing the difference in voltage between the two points by the distance between them (measured in meters). Do this for several different locations on a sheet of carbonized paper after you have plotted the equipotential line patterns. Describe the variations in electric field strength that are observed at various distances from the electrodes.

Answer depends on shape of electrodes. In general, the field is strongest near an electrode. However, it is constant between two long, parallel electrodes and zero inside a region surrounded by an electrode (such as a large circle-shaped one).

2. Compare the variations that are observed in electric field strength between electrodes that are small points and between electrodes that are long parallel lines.

The electric field strength varies between point electrodes; it is fairly constant between electrodes that are long parallel lines.

3. On a fresh sheet of carbonized paper, draw two large circles for the positive and negative electrodes. Using a battery and a voltmeter, probe the area between the electrodes and also probe the area inside the two circular electrodes. Compare the variations in electric field strength that is found between the two electrodes with the variations that are found within each of the electrodes.

The field strength is zero in the space inside one of the large circles; it varies somewhat between the two electrodes.

4. Near the opposite edges of a sheet of carbonized paper, draw two points with silver ink to serve as electrodes. Between these two points, near the center of the paper, draw a large circle with silver ink. Using a battery and voltmeter, probe the area outside the circle and inside the circle and compare the patterns and variations of electric field strength that are observed.

Variations in the electric field strength are observed outside the large circle but the field strength is zero inside the circle

5. The placement of the wires from the battery and voltmeter may cause distortions of the field on the paper. Experiment by placing the wires in different positions and try to find the arrangement which will cause the least distortion of the pattern. What are your conclusions?

The effect of the lead wires is least when these wires are perpendicular to the paper. Because the wires are not actually connected to the carbonized paper at places other than the electrodes, their effect on the electric field is very small and at low voltages cannot be detected at all.

EXPERIMENT • CHARGE OF AN ELECTRON

39

NAME _____ CLASS HOUR _____

LAB PARTNERS _____ DATE _____

PURPOSE

Robert Millikan performed an historic experiment which indicated that there is a smallest unit of charge in the universe and developed an ingenious technique for measuring this unit of charge. This experiment is repeated here using up-to-date laboratory equipment and techniques that are very similar to those used originally by Millikan.

This experiment should be done by students working in pairs The lab partners should check each other's voltmeter readings and computations

APPARATUS PREPARATION

1 Millikan apparatus

The apparatus may or may not be equipped with a variable power supply and a voltmeter If these are not supplied, connect them in accordance with the manufacturer's directions

Check the apparatus before use to be sure that the chamber is clean, the delivery tube is clear of obstructions, and the instrument is in perfect focus

PROCEDURE

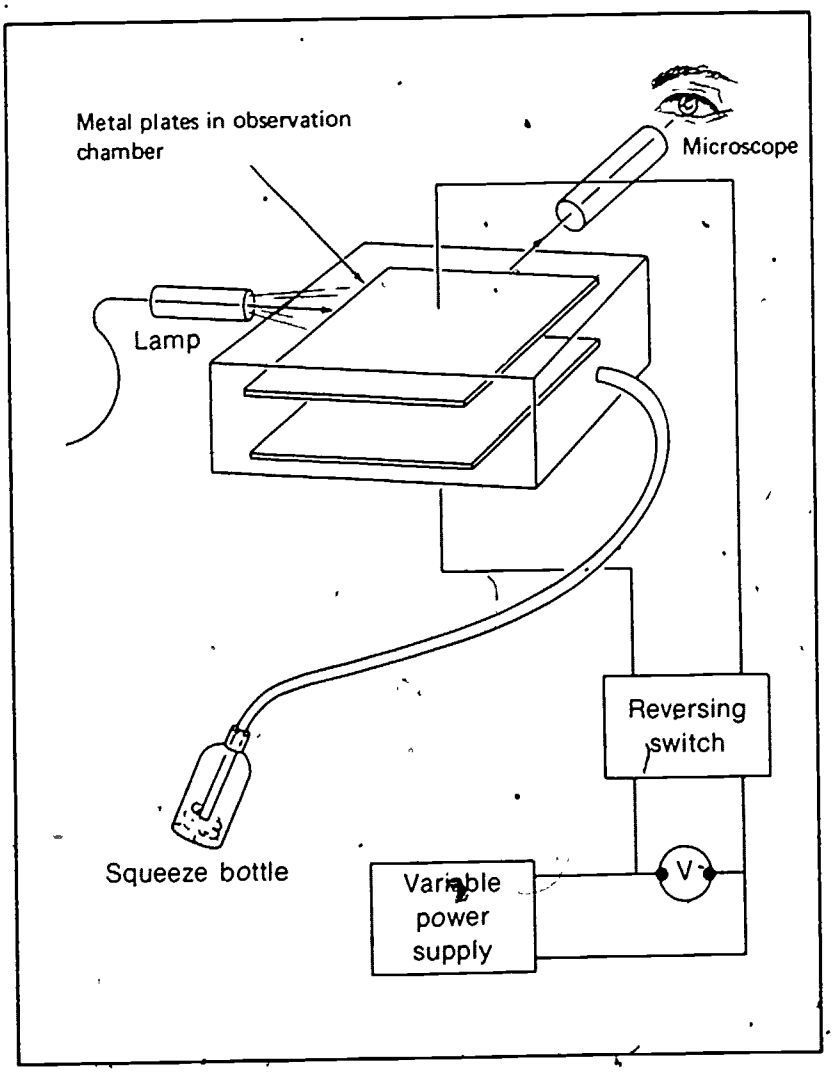

SUGGESTIONS AND TECHNIQUES

1. If the apparatus is cool and damp before it is used, moisture may collect on the inner surface of the lens when the light is first turned on. If this happens, take apart the light housing, wipe off the moisture, and wait a few minutes until the apparatus has thoroughly warmed up before reassembling the light.

2. The microspheres are tiny latex spheres and are mixed with water. These spheres are almost identical in size and density. According to the manufacturer, the density of latex is 1.05×10^3 kg/m^3. Although the spheres in each batch are fairly uniform in size, a considerable variation has been found from batch to batch, so the actual diameters are given on each bottle. Spheres of diameter 1.011×10^{-6}m have a mass of 5.67×10^{-16} kg and a weight of 5.6×10^{-15} N. If your spheres have a different diameter, you will have to calculate the mass. Use the relationship that the mass is equal to the density times the volume, where the volume of a sphere is $(4/3)\pi r^3$. (Don't forget to divide the diameter by two to get the radius.)

3. To eject the greatest number of spheres from the reservoir into the chamber, squeeze the plastic bottle firmly while it is connected to the observation chamber but do not allow the bottle to expand again until the bottle and chamber are disconnected. If the bottle is permitted to expand while connected to the chamber, most of the particles will be sucked back again, and very few will remain for observation.

4. In a fresh solution the microspheres are easily separated, but in a solution that has remained on a shelf for several months the microspheres sometimes clump together and coagulate, making experimentation impossible. If this happens, it is best to discard the solution and start with a fresh batch.

5. When the microspheres are first ejected into the chamber, observe them for a short time without applying any electric field. They should all fall at the same rate, but any spheres that clump together will fall faster than the rest and will give erratic results. Ignore these clumps when making further observations.

6. The most impressive results will be obtained by confining observations to particles that have very low charges. To select these, apply at least 100 V between the plates to clear out the highly charged particles rapidly as soon as the latex solution has been injected. If this procedure should clear out the entire field, it means that there were probably no spheres with low charges present. If the entire field is cleared out, squirt in another batch of latex spheres and start again.

7. To be sure that a particle is held motionless, continue observing it for a short time and make slight readjustments to the voltage if it should happen to move.

8. Do not allow any latex solution to remain in the apparatus at the end of the experiment. As the water evaporates, the remaining particles tend to clump together and jam the apparatus.

9. Although the distance between the plates in the observation chamber is usually given by the manufacturer as 5 mm, it is always a good idea to check this plate separation before using the apparatus for the first time. During mass manufacture of apparatus, individual variations from the nominal value are often observed.

EXPERIMENT 39. CHARGE OF AN ELECTRON

NAME CLASS HOUR

The general procedure in performing the Millikan experiment is to observe a tiny charged particle as it falls in air under the influence of gravity. Then, as the particle is falling, an electric field is applied which produces an electric force on the particle in the upward direction. The field strength is adjusted until the gravitational force F_g is equal to the electric force F_e and the particle is held motionless The gravitational force is the weight of a small latex microsphere. The electric force is the product of the charge on the microsphere multiplied by the electric field strength Thus, when the two forces are balanced in the apparatus,

$$mg = qE$$

where

- m is the mass of a microsphere
- g is the acceleration due to gravity
- q is the charge on the microsphere
- E is the electric field strength required to hold the microsphere motionless

To solve for q, we rearrange the above equation

$$q = \frac{mg}{E}$$

1. Turn on the light that illuminates the central chamber.

2. Squeeze the bottle which contains the supply of latex microspheres so that a quantity of microspheres will be expelled into the observation chamber. The act of squeezing the bottle causes friction which applies various amounts of electric charge to each microsphere, just as a comb is charged when you run it through your hair.

3. Observe the illuminated particles in the chamber through the microscope aperture as the particles slowly fall under the influence of gravity. Since a microscope usually inverts the image, the particles may appear to be falling upward.

4 Apply an electric field of about 20,000 volts per meter to the chamber. This can be done by applying a voltage of 100 volts between the metallic plates at the top and bottom of the chamber if the plates are 5 mm apart. If the apparatus does not already have a voltmeter and power supply incorporated, it will be necessary to connect a voltmeter and variable DC power supply to the plates for this purpose.

5. Observe the movement of the particles the instant that the electric field is applied. The particles which happen to be positively charged will rush in the direction of the electric field toward the negative plate, whereas the particles that happen to be negatively charged will move in the opposite direction, toward the positive plate. The highly charged particles will experience the greatest force and will rapidly move out of the field of view. However, the desired particles—those with smaller amounts of charge—will move very slowly and will remain in the field of view for a considerable length of time.

6. Focus on one of the most slowly moving particles in the field of view. By adjusting the voltage and operating the voltage reversing switch, if necessary, keep the particle absolutely motionless. Record the voltage in the data chart.

7. Calculate the charge on the microsphere by using the equation

$$q = \frac{mg}{E}$$

The electric field E between two flat, parallel, charged plates equals the voltage V between the plates divided by the separation d of the plates, so

$$q = \frac{mg}{(V/d)}$$

The charge q will come out in coulombs if

m is in kilograms (see Suggestions and Techniques)

g is 9.8 m/sec^2

V is in volts

d is in meters.

8. Repeat the procedures given above, selecting additional microspheres for observation each time and calculating the charges by the same method. Do this at least twenty times

9. In the second data chart, arrange your results in sequence, listing the smallest charge first and the greatest last

EXPERIMENT 39. CHARGE OF AN ELECTRON

NAME CLASS HOUR

DATA

Sphere Distance between plates, d = 5×10^{-3} m

diameter, Dia = 1.011×10^{-6} m

mass, m = 5.67×10^{-16} kg

weight, mg = 5.6×10^{-15} N

The precision of the charge values is limited by the precision of the value for the distance between plates.

Trial	V (V)	$E = \frac{V}{d}$ (V/m)	$q = \frac{mg}{E}$ (C)
1	78	16	3.5
2	18	3.6	16
3	142	28	2.0
4	22	4.4	13
5	40	8.0	7.0
6	78	16	3.5
7	160	32	1.8
8	150	30	1.9
9	40	8.0	7.0
10	25	5.0	11
11	45	9.0	6.2
12	25	5.0	11
13	150	30	1.9
14	20	4.0	14
15	20	4.0	14
16	25	5.0	11
17	78	16	3.5
18			
19			
20			

	Charge data listed in order of increasing value
1	1.8×10^{-19} C
2	1.9×10^{-19} C
3	1.9×10^{-19} C
4	2.0×10^{-19} C
5	3.5×10^{-19} C
6	3.5×10^{-19} C
7	3.5×10^{-19} C
8	6.2×10^{-19} C
9	7.0×10^{-19} C
10	7.0×10^{-19} C
11	11×10^{-19} C
12	11×10^{-19} C
13	13×10^{-19} C
14	13×10^{-19} C
15	14×10^{-19} C
16	14×10^{-19} C
17	16×10^{-19} C
18	
19	
20	

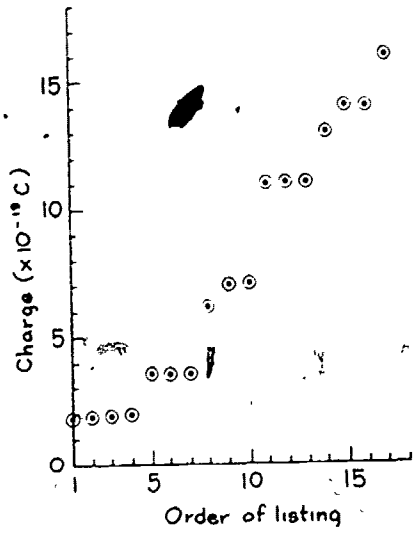

173

RELATED QUESTIONS AND ACTIVITIES

1. Use the data table in which the charges on the microspheres are arranged in sequence to plot a graph. The vertical axis should indicate the charge and the horizontal axis should indicate the order of listing, from 1 to 20 (or more). Examine the graph to see whether it indicates a smooth progression of charge that could be infinitely divisible into smaller and smaller charges or whether it indicates a quantized (step-wise) progression in which increases of charge are always whole-number multiples of some basic unit of charge. If quantization is indicated, what would be *your* value for the basic unit of electric charge?

q(e) = *1.8 x 10 -19* coulomb

The accepted value of the charge of a single electron is 1.6×10^{-19} coulomb. Compare your value for the basic unit of charge to the accepted value of the charge of an electron.

% error E = *The value obtained from the data equals the accepted value within a 12% experimental error.*

2. Although expensive laboratory voltmeters sometimes indicate precise voltage readings, they are often improperly calibrated, giving *inaccurate* readings. Suppose your voltmeter indicated voltages that were consistently 10 volts too high. Tell how this would affect your results.

The calculated charge values would be smaller.

3. Reexamine your data for discrepancies between your results and the accepted value. If they could be accounted for by improper voltmeter calibration, check your voltmeter against a voltage standard (such as a fresh mercury battery) and record your findings.

The voltmeter readings were all too high by approximately 2%

4. The precision of the results can be no better than the precision that can be obtained with the voltmeter and voltage control circuit. Determine what this precision is by adjusting the voltage so that a sphere hangs motionless and then finding the smallest voltage which will cause the sphere to move.

The voltage could be adjusted by ± 2 volts before the sphere would move.

EXPERIMENT • OHM'S LAW

40

NAME CLASS HOUR

LAB PARTNERS DATE

PURPOSE

Ohm's Law expresses the relationships among voltage, current, and resistance in an electric circuit. In this experiment, these relationships will be investigated with the aid of an ammeter and a voltmeter.

PROCEDURE

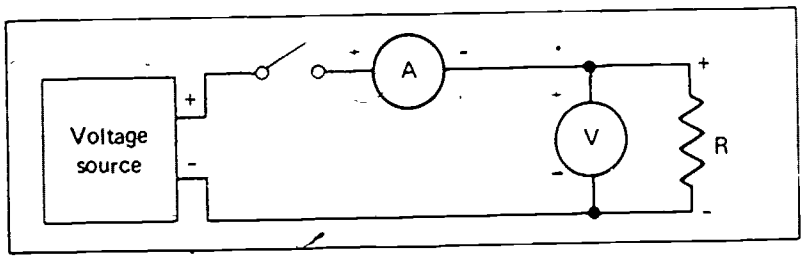

The general procedure to be followed in this investigation is to connect a resistor to a DC voltage source and measure the current in the circuit as the voltage is changed. The source may be either a variable DC power supply or a set of dry cells

1. Connect the output of a DC voltage source to a circuit consisting of a switch, a DC ammeter, and a resistor, as shown in the diagram. Be sure that the positive side of the ammeter is closer to the positive side of the voltage source in the circuit. Do not connect the voltmeter to the circuit at this time.

2. Have the instructor check your circuit before closing the switch to be sure that there are no shorts and that the connections to the ammeter are made correctly.

3. Check that the circuit is operating properly by observing the ammeter when the switch is closed. The pointer should move to the right to indicate that there is current in the circuit.

4. Connect the leads of a DC voltmeter across the resistor, making sure that the positive terminal of the voltmeter is closer to the positive terminal of the voltage source. If dry cells or a low-voltage power supply is used, the voltmeter connection may be made without danger while there is current in the circuit. The voltmeter will indicate the voltage across the resistor. When you are certain that the circuit is properly connected and that all connections are tight, open the switch to shut off the current and prepare to take data

5. With the voltage source set to produce the minimum voltage that will cause deflections on the electric meters, close the switch and

This experiment should be done by students working in groups of two or three. It is very difficult for students to work alone because of the many manipulations and recordings that are required.

It is strongly recommended that the voltages be low enough to prevent overheating, yet high enough to permit midscale readings on the ammeters and voltmeters that are available

Although time can be saved if the instructor connects the complete circuit before the students start work, much can be learned by allowing the students to flounder about somewhat and gain first-hand experience of their own in connecting circuits.

It is also a good idea to equip the lab with rugged diode-protected meters which can take a small amount of student abuse.

APPARATUS PREPARATION

1 resistor, 25 to 200 ohms
1 DC ammeter
1 DC voltmeter
1 DC battery or power supply
1 single-pole switch wire

SUGGESTIONS AND TECHNIQUES

1. It is important to have an instructor check your circuits the first time to be sure that they are properly connected. If the ammeter is connected improperly, it can be seriously damaged and can require expensive repairs.

2. Be sure that the pointers of your electric meters are on zero before the circuit is activated. If the pointers are not on zero, either adjust the meters before proceeding or note the amount of error so that it may be added or subtracted to the subsequent readings.

3. To avoid parallax, read the meters with only one eye open and positioned directly above the pointer.

4. Open the switch after each set of readings so that there is current in the circuit for the least possible amount of time. This precaution reduces the possibility of the resistor becoming hot and changing resistance during the experiment.

read the ammeter and voltmeter as quickly as possible without sacrificing precision and accuracy. Open the switch and record these readings in the data chart.

6. Adjust the voltage source so that its voltage is increased in small steps. At each step, open the switch and record the readings of the ammeter and voltmeter.

7. Make a graph of current vs. voltage from your data.

DATA

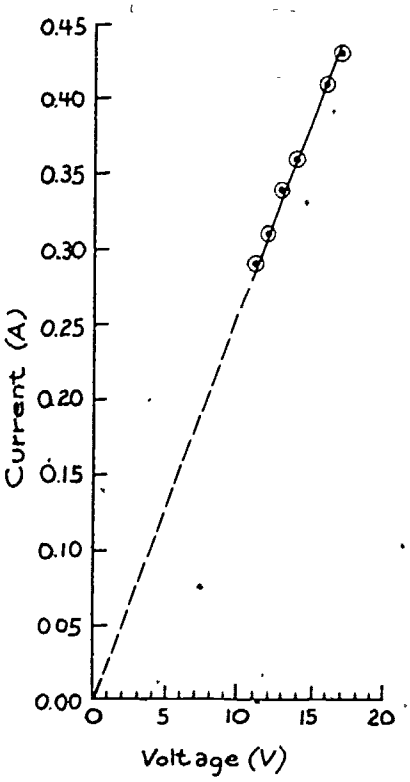

TRIAL	Voltage V = (V)	Current I = (A)	Calculated Resistance $R = \frac{V}{I}$ Ω
1	11	0.29	38
2	12	0.31	39
3	13	0.34	38
4	14	0.36	39
5	16	0.41	39
6	17	0.43	40
7			
8			
9			
10			
11			

NAME CLASS HOUR

RELATED QUESTIONS AND SUGGESTED ACTIVITIES

1. Examine your graph and state the relationship which exists between the current and voltage in the circuit.

The current is directly proportional to the voltage.

2. For each set of data that you have recorded in the data chart, calculate the resistance by dividing the voltage (in volts) by the current (in amperes). Enter these calculations in the third column of the data chart. As the voltage is increased, does the calculated resistance increase, decrease, or stay the same?

As the voltage increased, the calculated resistance also increased, but at a much smaller rate than the current in the circuit The slight increase in resistance at higher voltages was probably due to an increase in temperature of the resistor

3 When the meters are connected in accordance with the instructions, a small portion of the current indicated by the ammeter is routed through the voltmeter, causing erroneous results To avoid this, try the alternate circuit shown below Here, the ammeter will always give correct readings but the voltmeter indication will be high because the voltmeter is across both the ammeter and resistance instead of across the resistance alone Compare your data taken with the two alternate circuit configurations.

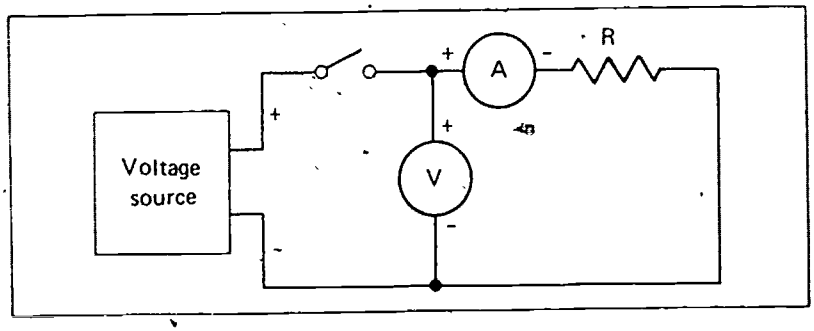

Although these changes of connection are significant when very sensitive meters are used for making the readings, the comparatively inexpensive ammeters and voltmeters which are used in most schools are not sensitive enough to detect these differences.

Voltage (V)	Current (A)	Resistance (Ω)
4	0.63	6
6	0.78	8
8	0.88	9
10	0.98	10
12	1.06	11
14	1.16	12
16	1.25	13

Nichrome wire may be purchased from scientific supply companies. The wire that was used to obtain the data in the table was obtained from a hardware store as a replacement heating element.

Although nichrome has a large resistance compared with wires of other material, a short section has a resistance of less than one ohm. To obtain this data, a 25-ohm resistor was connected in series with the nichrome wire to limit the current in the circuit and prevent the wire from getting hot.

4. Repeat the experiment, replacing the resistor by (a) a low-voltage bulb, such as a flashlight bulb; (b) a junction diode. In each case, take voltage-current data as different voltages are applied and describe what happens to the resistance of the bulb or diode as increasing amounts of current pass through it.

The voltage-current data at the left were taken when the resistor was replaced by a 50W ordinary household light bulb. The data indicate that the resistance of a light bulb is greater when there is more current through the bulb and its temperature is higher.

5. Connect a 1-meter length of nichrome wire, an ammeter, and a switch to the terminals of a low-voltage power supply Connect the negative terminal of a voltmeter to the negative side of the wire and clip the positive voltmeter lead to the resistance wire so that there is 5 cm of wire between the two voltmeter leads. Record the voltmeter reading and the ammeter reading. Increase the distance between the voltmeter leads in 5-cm steps, recording the meter readings at each step. Graph the data and examine it carefully, stating any relevant conclusions that may be drawn.

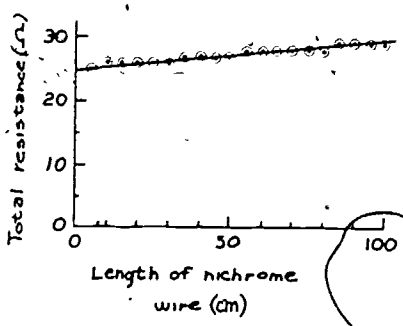

Assuming the resistance of the 25-ohm resistor, the connections, and the leads remains constant at about 25 ohms, we see that the resistance of the nichrome wire is directly proportional to the length of the wire.

TRIAL	Length of wire (cm) L =	Current (A) I =	Voltage (V) V =	Calculated resistance Ω R =
1	5	0.00800	0.20	25
2	10	0.00785	0.20	26
3	15	0.00782	0.20	26
4	20	0.00780	0.20	26
5	25	0.00775	0.20	26
6	30	0.00770	0.20	26
7	35	0.00760	0.20	27
8	40	0.00745	0.20	27
9	45	0.00740	0.20	27
10	50	0.00735	0.20	27
11	55	0.00725	0.20	28
12	60	0.00720	0.20	28
13	65	0.00720	0.20	28
14	70	0.00715	0.20	28
15	75	0.00710	0.20	28
16	80	0.00702	0.20	28
17	85	0.00700	0.20	29
18	90	0.00695	0.20	29
19	95	0.00690	0.20	29
20	100	0.00682	0.20	29

EXPERIMENT 41 SERIES CIRCUITS

NAME CLASS HOUR

LAB PARTNERS DATE

PURPOSE

Combinations of resistors in series circuits are used in modern electronic devices from simple switches to complex analog computers. The principles of operation of many devices are easily understood by examining the relationships between resistance, current, and voltage in basic series circuits.

This experiment should be done by students working individually or in pairs.

It is not likely that students unfamiliar with circuit hookups can complete this entire experiment in a conventional laboratory session, because a great deal of manipulation is required for each of the meter readings. Although it is always preferable to do all calculations in the laboratory, so that questionable data can be rechecked, a great deal of lab time can be saved by allowing students to do the data analysis as a homework assignment.

APPARATUS PREPARATION

3 resistors 15 ohms, 25 ohms, and 50 ohms (each 2 to 10 W)
6 clip leads, each 20 cm long with an alligator clip at each end
1 DC ammeter
1 DC voltmeter
1 single-pole switch
1 battery or 6VDC power supply

Much time and wear on the equipment can be saved by permanently mounting three resistors on a small block of wood and identifying the resistors as R_1, R_2, and R_3 or having their resistances clearly marked.

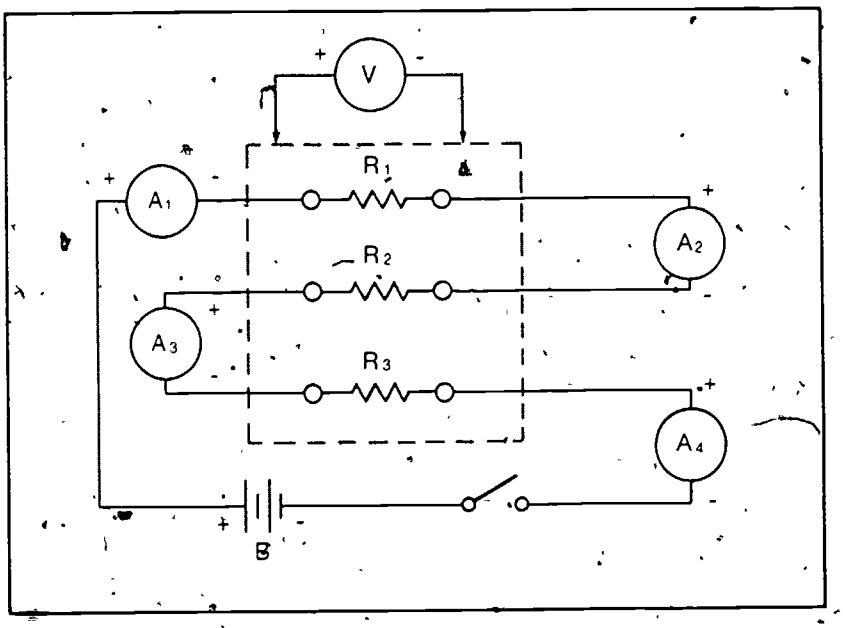

1. Connect three resistors in series with a switch and a low-voltage source, as shown in the diagram. If four ammeters are available, they should be connected in the circuit simultaneously to measure the current in the different parts of the circuit. If only one ammeter is available, it should be connected in one of the four positions with clip leads completing the connections at the other three positions. Close the switch and record the current at each of the four locations in the series circuit.

2. With the switch closed and current in the circuit, touch the voltmeter leads to the ends of resistor R_1, making sure that the positive voltmeter lead is closer to the positive terminal of the voltage source. Record the voltmeter reading and repeat this procedure to find the voltages across resistors R_2 and R_3 and the total voltage which is being produced by the voltage source.

SUGGESTIONS AND TECHNIQUES

1. Remember to check the zero settings of all electric meters before they are connected into circuits. If the pointers are not on zero, reset them or record the amount of error so that it may be taken into account when recording readings.

2. Avoid parallax when reading meters by holding your eye directly above the pointer.

3. Before turning on the current, make sure that all connections are tight. Have the circuit checked by the instructor.

4. Turn off the current immediately after making each reading to conserve batteries and to minimize any changes in resistance which might be caused by the heating effect of the electric current.

5. If the ammeter or voltmeter has several ranges, prevent damage to the meter by connecting it so that it operates at its greatest range. Read the meter to be sure that it is safe to switch to one of the lower ranges. For greatest accuracy, select the range which will give a meter reading near the center of the scale

DATA

Nominal values of known resistors

Resistor R_1 15 ohms

Resistor R_2 25 ohms

Resistor R_3 50 ohms

Resistor	Current Ammeter readings (Amps) I =	Voltage Voltmeter readings (Volts) V =	Resistance R = V/I (Ohms) R =
R1=	A1 = 10	V1 = 1.5	R1 = 15
R2=	A2 = 10	V2 = 2.4	R2 = 24
R3=	A3 = 10	V3 = 4.7	R3 = 47
Battery B =	A4 = 10	V_B 8.6	R = 86 (Total)

NAME CLASS HOUR

RELATED QUESTIONS AND SUGGESTED ACTIVITIES

1. If the individual resistances of the three resistors are not known, measure them with an ohmmeter or by using the ammeter-voltmeter method described in the previous experiment. Record these values below.

R_1 = 15 ohms R_2 = 25 ohms R_3 = 50 ohms

2. The current leaving any circuit element (such as a battery or resistor) must be exactly the same as the current entering it. How do the readings of the ammeters in your series circuit illustrate this principle?

The ammeter readings are identical in each case

3. The power (voltage times current) that is supplied by the voltage source must equal the sum of the power losses (I^2R) in each of the resistors. Using your data for the series circuit, calculate the power supplied by the source and the power lost by each of the three resistors. If the power supplied by the source and the power lost through the three resistors are not identical, calculate your percentage error.

$P_1 = I_1V_1 =$ 15W

$P_2 = I_2V_2 =$ 24W

$P_3 = I_3V_3 =$ .47W

$P_T = I_4V_6 =$ 86W

4. In a series circuit the sum of the voltages across the individual resistors should be equal to the voltage that is supplied by the source. Verify this principle by examining your data and calculate the percentage error.

15 + 24 + 47 = 86

Within two significant figures, there is no error.

EXPERIMENT • **PARALLEL CIRCUITS**

42

NAME _____ CLASS HOUR _____

LAB PARTNERS _____ DATE _____

PURPOSE

In this experiment you will find out how the voltages and currents in a parallel circuit differ from those previously found in the series circuit containing the same elements.

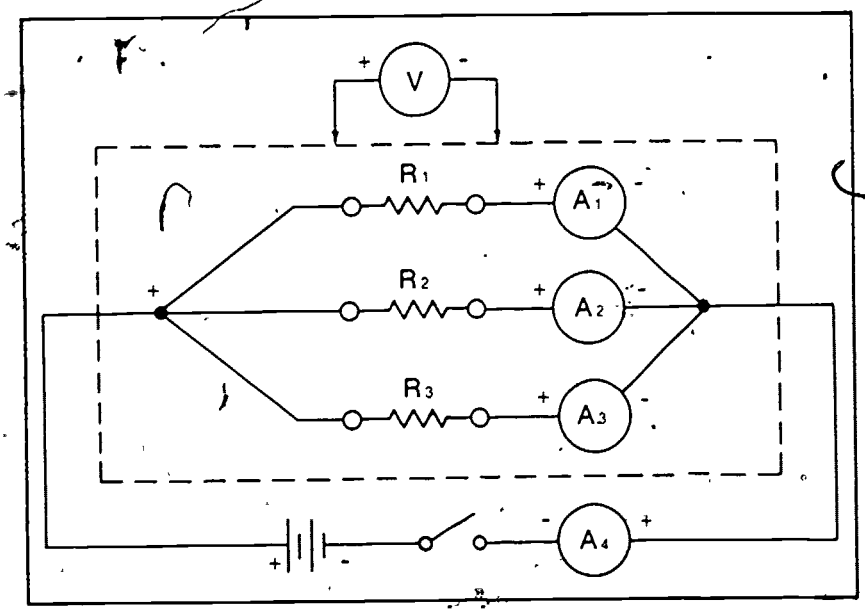

Every student should have an opportunity to hook up the circuit by following the circuit diagram. Most students experience difficulty at first, but improve after a few trials.

APPARATUS PREPARATION

3 resistors: 15 ohms, 25 ohms, and 50 ohms (each 2 to 10 W)
6 alligator clip leads, each 20 cm long.
1 DC ammeter
1 DC voltmeter
1 single-pole switch
1 battery or 6VDC power supply

The same apparatus is useful for this experiment and for the previous experiment on series circuits.

1. Connect the three resistors in parallel with the switch and the low-voltage source, as shown in the diagram. If four ammeters are available, connect them in the positions shown. If only one is available, connect it in each of the positions in turn, substituting clip leads for the other three.

2. Connect the voltmeter leads to the output terminals of the voltage source, making sure that the positive voltmeter lead is connected to the positive terminal of the voltage source. Record the ammeter readings in each of the four positions designated in the circuit. Before making each reading, check the voltmeter to be sure that the voltage of the source has not changed.

3. Record the voltage across the output terminals of the voltage source and then move the voltmeter leads across each of the three resistors in turn. Record all the readings in the data chart.

DATA

Resistor Nominal value (Ohms)	Current (I) (Amps)	Voltage (V) (Volts)	Resistance (R1) Calculated value (Ohms)
R1 = 15	I1 = .35	V1 = 5.2	R1′ = 14.9
R2 = 25	I2 = .19	V2 = 5.2	R2′ = 27.4
R3 = 50	I3 = .10	V3 = 5.2	R3′ = 52
Total R R1 + R2 + R3 RT = 90	I4 = .65	V4 = 5.2	Total R′ R′ = I4/V4 R′T = 94.3

RELATED QUESTIONS AND SUGGESTED ACTIVITIES

1. From your data chart, what do you notice about the values of the voltages across the three resistors (V1, V2, V3) and the total voltage (V4)?

All of the voltages are identical regardless of where they were measured.

2. From your data chart, what do you notice about the values of the currents in the three resistors (I1, I2, I3) and the total current (I4)?

I_4 (.65A) is almost equal to the sum of I_1, I_2, and I_3 (.64A)

3. Show that the power supplied by the source (I4 times V4) is equal to the sum of the power lost by the individual resistors (I1) (V1) + (I2) (V2) + (I3) (V3). If these values are not identical, calculate your percentage error.

I_1V_1 = (.35A)(5.2V) = 1.82W

I_2V_2 = (.19A)(5.2V) = .99W

I_3V_3 = (.10A)(5.2V) = .52W

3.33W

I_4V_4 = (.65A)(5.2V)

= 3.38W

$$\% \text{ error} = \frac{3.38W - 3.33W}{3.38W} \times 100 = 1.5\%$$

NAME CLASS HOUR

4. When there is a junction of several wires in a circuit, the sum of the currents going into the junction must be identical to that of the currents coming out. Refer to your data for the parallel circuit and tell how this principle is illustrated at the junction of the four ammeters.

The currents from A_1, A_2, and A_3 go into the junction (.65A) and (.64A) comes out. Since the last digit is estimated, it is likely that the same current that goes into the junction also comes out

5 In a circuit with branches, if you start at the positive terminal of the voltage source and follow the circuit through any of its branches until you come to the negative terminal of the voltage source, the total of the voltages that are encountered must be exactly equal to that supplied by the source Verify this principle by examining your data for the parallel circuit and calculate the percentage error.

(.35A) (14.9Ω) = 5.2V

(.19A)(27.4Ω) = 5.2V

(.10A)(52Ω) = 5.2V

To 2 significant digits, the error is zero

EXPERIMENT • ELECTRICAL EQUIVALENT OF HEAT

43

NAME _____ CLASS HOUR _____

LAB PARTNERS _____ DATE _____

PURPOSE

In this experiment electrical energy will be converted to heat, and the efficiency of the apparatus that makes this conversion will be determined.

PROCEDURE

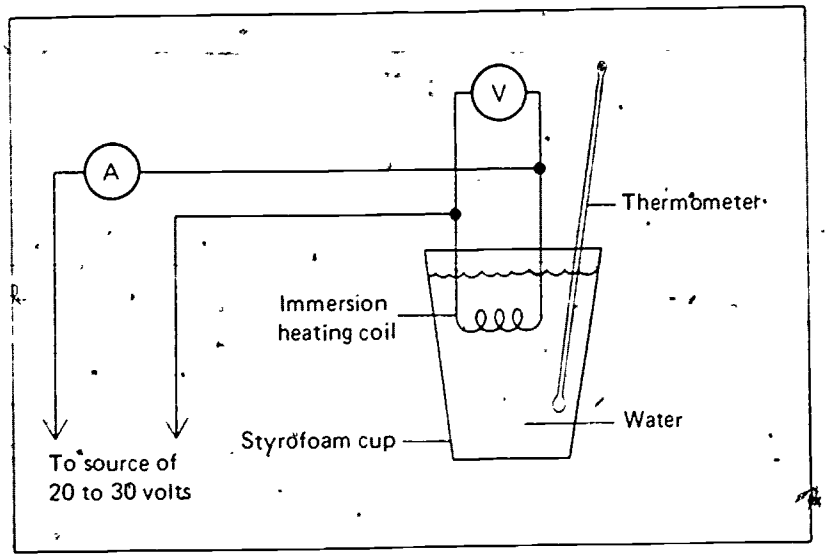

The general procedure is to put a known amount of electrical energy into a heating coil which is immersed in water and find the amount of heat that is absorbed by the water.

Data Entry

1. Weigh a Styrofoam cup and enter its mass ..... Row A

2. Place about 200g of cold water in the cup, weigh it, and enter the mass of the cup and water ..... Row B

3. Place the heating coil in the cup making sure that it is completely submerged in the water.

4. Connect a source of 20 to 30 volts AC or DC to the terminals of the heating coil. In series with one of the power leads connect an ammeter (AC or DC depending on the power source) having a range of 0 to 3 A.

5. Connect a voltmeter across the terminals of the heating coil. The voltmeter range should be suitable for monitoring the AC or DC power supplied.

This experiment should be done by at least two students working together. It is much too difficult for students working alone to take all of the necessary readings.

APPARATUS PREPARATION

- *2 Styrofoam cups (one inside the other to give additional insulation)*
- *1 immersion heating coil*
- *1 ammeter (range 0 to 3A) AC or DC, depending on power source*
- *1 voltmeter (range 20 to 30 V) AC or DC, depending on power source*
- *1 thermometer, range 0 to 100°C*
- *1 triple beam balance*

Although commercial apparatus for this equipment is available from scientific supply companies, excellent results can be obtained by using one-dollar immersion heaters sold in drug and hardware stores for heating single cups of hot water. These, combined with disposable Styrofoam cups, provided excellent results, such as those given in the sample data.

Although these coils will work with 120 VAC, heating is much too rapid in the area surrounding the coil, and thorough mixing of the water is impossible. The optimum voltage is about 30 VAC and can be obtained with an AC power supply, a variac, or by connecting an electric light bulb of the right size in series with the coil.

The most important of these suggestions is number 6. The water must be thoroughly stirred before each temperature reading is attempted. The rest of the suggestions are not nearly as important for obtaining good experimental results.

Also be sure to caution the students that inexpensive immersion heaters should never be plugged in unless the coil is covered with water. Without a water covering, heat build-up will burn out the coil in a few minutes.

SUGGESTIONS AND TECHNIQUES

1. To minimize heat transfer between the water in the cup and the air in the laboratory, try using two Styrofoam cups, one inside the other, and keep the apparatus covered during the entire period that the water is being heated.

2 To minimize heat losses in the connecting wires, use heavy wires and keep them as short as possible.

3. Good results are obtained with an inexpensive immersion heater. The type that is usually sold in hardware and variety stores for heating a single cup of coffee works well.

4. Unless the water from the tap is very cold, pour water from a pitcher of ice water, making sure that no chunks of ice are transferred.

5. Make sure that the thermometer does not touch the heating coil.

6. Stir the water in the Styrofoam cup immediately before taking each temperature reading. Failure to do this will give erroneous results because hot and cold water pockets are formed in the cup during the heating process.

7. This experiment may be done with either alternating or direct current but be sure that the voltmeter and the ammeter are the correct types for the current used.

8. Be sure to avoid accidental grounds when dealing with power supplies and water If the lab is not specially wired to prevent accidental grounds, you could receive a shock by touching a water pipe or gas jet at the same time you are handling the apparatus.

6 Place a thermometer in the water, turn on the power supply and allow about a minute for the apparatus to warm up before taking any measurements

7 Start the experiment by stirring the water Then, as quickly as possible, enter the following in the data chart

The initial temperature of the water ..... Row D
The starting time ..... Row G
The ammeter reading ..... Row K
The voltmeter reading ..... Row L

8. Allow the apparatus to operate until the temperature of the water is as high above the room temperature as it was below the room temperature at the start of the experiment Stir the water, check that the readings of the ammeter and voltmeter have not changed, and then as quickly as possible enter the following in the data chart:

The final temperature of the water ..... Row E
The time at the end of the trial ..... Row H

***At this point, if the computer program for this experiment is available, enter the data into the computer for processing and verification.

EXPERIMENT 43. ELECTRICAL EQUIVALENT OF HEAT

NAME CLASS HOUR

Row	Data Entry		TRIAL 1	TRIAL 2
A.	Mass of cup (grams)	m(c) =	5	
B.	Mass of cup + water (grams)	m(c + w) =	138	
C.	Calc. mass of water (grams)	m(w) =	133	
D.	Initial temp. of water (°C)	T(i) =	21.0	
E	Final temp. of water (°C)	T(f) =	50.7	
F	Calc. increase of water temp.	T =	29.7°	
G.	Starting time	t(i) =	1:03	
H	Ending time	t(f) =	1:15	
I	Calc total time (sec)	t =	720	
J	Calc. heat absorbed (calories)	Q =	3950	
K.	Ammeter reading (amps)	I =	0.78	
L.	Voltmeter reading (volts)	V =	30.0	
M.	Calc. electric energy (joules)	E =	16800	
N	Calc. elect equiv. of heat	J/cal =	4.25	
O	Efficiency of heater (%)	Eff =	97.8	

CALCULATIONS.

Whether or not the computer program for this experiment is available, perform the following calculations and enter the results in the specified row of the data chart.

1 Calculate the mass of the water in the cup by subtracting the mass of the cup from the combined mass of the cup and water ..... Row C

2. Calculate the increase in temperature by subtracting the initial temperature from the final temperature ..... Row F

3. Calculate the time interval during which the heating took place by subtracting the initial time from the final time ..... Row I

4 Calculate the number of calories of heat energy absorbed by the water by multiplying the mass of the water by its change in temperature ..... Row J

5. Calculate the number of joules of electric energy that were consumed by multiplying the volts, amperes, and the time in seconds ..... Row M

6. Calculate the electrical equivalent of heat (the number of joules of electric energy to supply one calorie of heat energy to the water) by dividing the joules by the calories ..... Row N

7. Calculate the efficiency of the heater to convert all of the electric energy into heat energy. Use the relationship:

$$\text{Eff} = \frac{Q \times 4.19\ \text{J/cal}}{\text{Electric Energy}} \times 100\% \ldots \text{Row O}$$

RELATED QUESTIONS AND SUGGESTED ACTIVITIES

1. The accepted value for the electrical equivalent of heat is 4.19 J/cal, Compare the value that you calculated with the accepted value and calculate the percentage error.

(4.25 J/c — 4.19 J/c)/4.19 J/c x 100% = 1.43%

2. In this experiment, no allowance was made for the heating of the thermometer. How did this oversight affect the value of the electrical equivalent of heat that you calculated?

The actual amount of heat absorbed by the water should have been greater, giving a value that is closer to the ideal

3. Compare the electrical equivalent of heat that you obtained with the values that were obtained independently by other members of the class. If the values obtained in the laboratory were consistently higher or consistently lower than the accepted value, analyze the procedures carefully and try to pinpoint the major systematic errors in the apparatus or in the procedure which were responsible

All values are higher than accepted values Some heat was absorbed by thermometer, containers and surroundings.

4. Repeat the experiment taking the temperature of the water every 30 seconds while it is being heated by the coil. Make a graph of the temperature vs. time. If the water is being heated uniformly, the graph should be a straight line. Account for any deviations from the straight line in your graph.

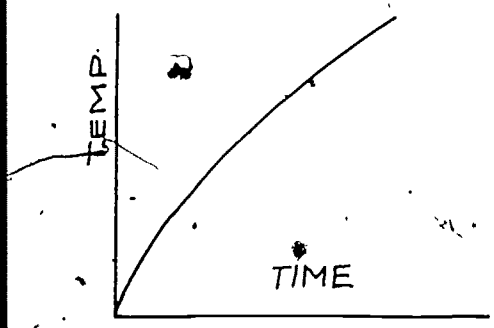

TIME	TEMP C°	TIME	TEMP C°	TIME
0	22.0	240	33.0	45.0
60	23.5	300	36.0	47.0
120	27.0	360	38.2	49.0
180	32.0	420	40.0	50.7

The graph line starts out straight but starts to flatten at the top due to heat

5. Compare the efficiencies of these inexpensive heating coils with those of the more expensive electric coffee percolators. Summarize your results below and attach a copy of your detailed test procedures and data.

EXPERIMENT • RESONANCE IN ELECTRIC CIRCUITS

44

NAME _____ CLASS HOUR _____

LAB PARTNERS _____ DATE _____

PURPOSE

Just as large-amplitude vibrations are produced in mechanical objects when energy is added at their natural resonant frequencies, resonances are also produced in circuits when energy is added at the correct frequency. In this experiment the resonant frequency of a circuit containing inductors and capacitors will be investigated.

PROCEDURE

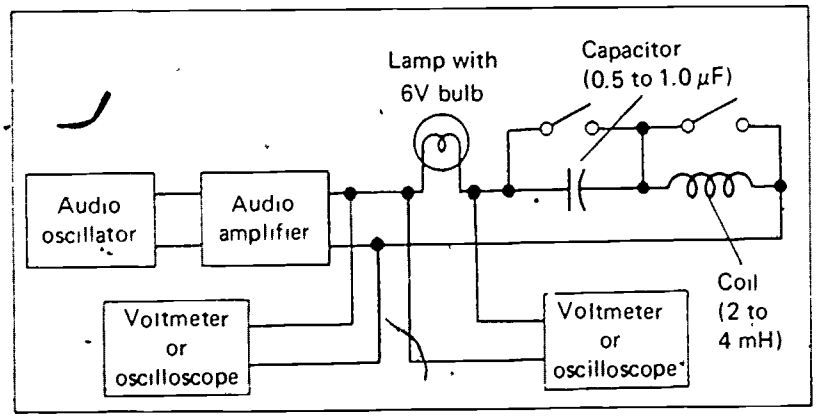

1 Connect the output of an audio oscillator to an audio amplifier. Across the output terminals of the amplifier, connect a lamp, a coil, and a capacitor in series, as shown in the diagram Shorting switches or clip leads should be connected across the coil and capacitor so that they may be easily by-passed when desired.

2 Connect an AC voltmeter or an oscilloscope across the output terminals of the audio amplifier to monitor the output level of the amplifier. Connect a second AC voltmeter or oscilloscope across the terminals of the lamp to provide quantitative data across the load

3. Close the shorting switches or connect clip leads across the coil and capacitor. Turn on the audio oscillator and amplifier, and adjust the amplifier output so that the bulb filament is lit with reasonable brilliance. Record the level of the amplifier output that is indicated on the voltmeter or oscilloscope connected across its terminals. During the steps which follow, it may be necessary to readjust the amplifier output or volume control from time to time to maintain the same level at the output terminals.

4 Set the audio oscillator to produce a frequency of 2 kHz. Increase the frequency to 15 kHz in 0.5-kHz steps, observing the lamp and recording the voltages across it in column A of the data chart.

Because the apparatus needed for this experiment is comparatively expensive, it is not likely that more than one group of perhaps two or three students can work on the experiment at any given time.

For optimum results, it is suggested that a group of students be assigned in advance to set up and do some preliminary runs with the apparatus. Then they can take actual data in front of the class while the rest of the students record data and analyze the results in their own lab books

APPARATUS PREPARATION

- *1 audio oscillator or audio signal generator capable of producing sine waves from 0 to 20 kHz*
- *1 audio amplifier capable of producing an output of 5 W or more. A classroom tape recorder or phonograph will do.*
- *1 AC voltmeter with a high impedance, such as a vacuum-tube or solid-state voltmeter (an oscilloscope may be substituted) (Although a second voltmeter is called for, one meter can serve both purposes if it is switched from one position to the other in the setup)*
- *1 capacitor, 0 5 to 1 0 μ F*
- *1 coil (about 2 to 4 mH) This can be made by scramble-winding about 400 turns of No. 28 insulated wire on a 2-cm pencil stub*
- *1 6V lamp*

SUGGESTIONS AND TECHNIQUES

1. If an AC voltmeter is being used to monitor the voltage at the output terminals and to measure the voltage across the lamp, the voltmeter should have a resistance of at least 20,000 ohms per volt so that its effects on the circuit being measured will be minimized.

2. If an oscilloscope is used for monitoring and voltage measuring, set the horizontal frequency of the oscilloscope at about 1000 Hz and leave it set at this frequency for the entire experiment. Set the vertical gain control so that the height of the trace on the screen is about three quarters of the maximum during the first run, when the coil and capacitor are shorted out. If the oscilloscope does not have a grid over the screen, tape a piece of semi-transparent graph paper over the screen and record the voltage indications in arbitrary units marked on the graph paper.

3. If the audio amplifier has a choice of several output terminals of various impedances, choose the set of terminals which is marked with an impedance of 4Ω.

4. Be sure to check the output level at the amplifier terminals before each reading is made. Readjust the output control if the level should change from the initial setting.

5. Connect an inductor to the circuit by removing the short across the coil. Repeat the procedure of the step above by starting the audio oscillator at a frequency of 2 kHz and increasing it in 0.5-kHz steps to a frequency of 15 kHz. At each step record the voltage across the lamp in column B of the data chart.

6. Replace the short across the coil and remove the short from the capacitor so that the capacitor and lamp are in the circuit. Repeat the procedure of the step above by changing the frequency of the audio oscillator from 2 to 15 kHz and recording the voltage across the lamp at 0.5-kHz intervals in column C of the data chart

7. Remove all of the shorts so that the capacitor, coil, and lamp are connected in series with the amplifier output terminals. Starting with the audio oscillator at a frequency of 2 kHz, increase it to 15 kHz in 0.5-kHz steps, recording the voltage across the lamp at each step in column D of the data chart.

8. On a piece of graph paper, plot the frequency on the horizontal axis and the voltage chart, draw four curves on the same set of axes as follows:

See sample graph on opposite page.

a) Circuit with pure resistance (only the lamp in the circuit and negligible amounts of inductance and capacitance)

b) Circuit with inductance and resistance (lamp and coil in the circuit).

c) Circuit with capacitance and resistance (lamp and capacitor in the circuit).

d) Circuit with resistance, inductance, and capacitance (lamp, coil, and capacitor in the circuit).

EXPERIMENT 44. RESONANCE IN ELECTRIC CIRCUITS

NAME CLASS HOUR

Frequency (kHz)	Voltage across the lamp (V)			
	A Resistance only	B Inductance and resistance	C Capacitance and resistance	D Inductance, capacitance, and resistance
2.0	0.35	0.95	0.20	0.20
2.5	0.35	0.85	0.22	0.10
3.0	0.35	0.72	0.24	0.10
3.5	0.35	0.70	0.26	0.25
4.0	0.35	0.70	0.28	0.47
4.5	0.35	0.69	0.30	0.20
5.0	0.35	0.68	0.31	0.18
5.5	0.35	0.68	0.32	0.20
6.0	0.35	0.65	0.32	0.50
6.5	0.35	0.64	0.32	1.10
7.0	0.35	0.62	0.32	1.70
7.5	0.35	0.62	0.32	1.80
8.0	0.35	0.62	0.32	1.43
8.5	0.35	0.62	0.33	1.00
9.0	0.35	0.62	0.33	0.50
9.5	0.35	0.62	0.34	0.30
10.0	0.35		0.40	0.20
10.5	0.35		0.40	0.17
11.0	0.35		0.40	0.15
11.5	0.35		0.32	0.12
12.0	0.35		0.32	0.10
12.5	0.35		0.30	0.08
13.0	0.35		0.30	0.06
13.5	0.35		0.31	0.05
14.0	0.35		0.32	0.04
14.5	0.35		0.32	0.03
15.0	0.35		0.33	0.02

Apparatus used for sample data:
Cenco audio oscillator
amplifier of the school recorder
RCA Volt-ohmist
0.5 μF capacitor
coil made by winding 400 turns of enameled wire (from yoke of discarded TV set) around a 2-cm pencil stub
lamp bulb from 6 V lantern

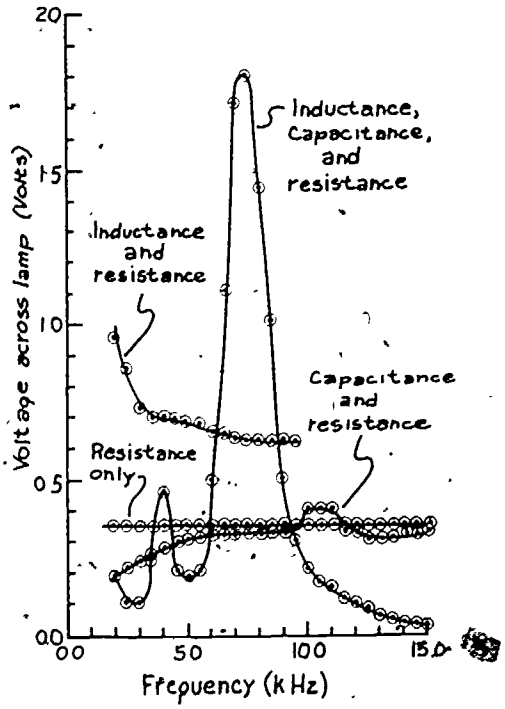

RELATED QUESTIONS AND SUGGESTED ACTIVITIES

1. Refer to your graph and state the relationship between the maximum voltage across a resistor (the lamp in this case) and the applied frequency when the circuit contains

a) resistance only. *The voltage remained constant as frequency was changed.*

b) resistance and inductance. *As the frequency increased, the voltage decreased, then flattened out.*

c) resistance and capacitance. *As the frequency increased, the voltage increased, then dropped slightly and began to increase slowly.*

d) resistance, capacitance, and inductance. *The voltage reached a small peak at 4 0 kHz and a much larger peak at 7 3 kHz, then fell rapidly to zero.*

The inductance of the coil was not known, so it was assumed that the inductance was 2 millihenries

Using the value of 2 mH for the coil resulted in an error of 50% between calculated and experimental results.

Working backwards from the experimental data, it was determined that the error would have been zero if the coil was 1 millihenry instead of 2.

$$L = \frac{1}{4\pi^2 f^2 C}$$

Substituting
$f = 7\ 3 \times 10^3$ Hz
and $C = 0.5 \times 10^{-6}$ F
into this equation gives
$L = 1$ mH

2. When the natural frequency of the lamp-coil-capacitor circuit has been reached, the lamp will glow the brightest and the average power supplied to the circuit will be a maximum. Examine your graph and record the frequency at which this resonance occurs.

7.3 kHz

If the capacitance and inductance values are known, the value of the resonant frequency f in hertz can also be calculated from the equation.

$$f = \frac{1}{2\pi\sqrt{LC}}$$

where, L is the inductance of the coil in henries

C is the capacitance in farads.

Compare the calculated frequency with the one that was experimentally derived and determine your percentage error.

$$f = \frac{1}{2\pi\sqrt{(2 \times 10^{-3}\ H)(0\ 5 \times 10^{-6}\ F)}} = 5\ kHz \quad (50\%\ error)$$

3. Set up your own experiment using a capacitor and a coil that have slightly different values from those already used. Predict the resonant frequency of the circuit using the equation given above and find the resonant frequency experimentally by graphing your data. Compare these values and calculate your percentage error.

Using the corrected value for the coil of 1 mH and using a 1 μF capacitor, it was predicted that the resonant frequency would be 5 kHz. This was confirmed experimentally using the same apparatus set-up.

EXPERIMENT • MAGNETIC FIELDS

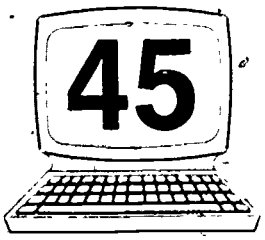

NAME CLASS HOUR

LAB PARTNERS DATE

PURPOSE

In this experiment the concept of magnetic field will be developed by investigating the space around the magnets.

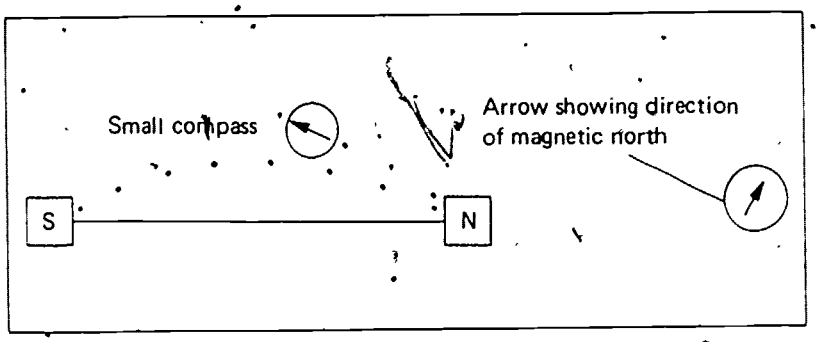

PROCEDURE

1. Place the north pole of a bar magnet under one end of a sheet of cardboard or stiff paper, and place the south pole of a second bar magnet under the other end.

2. Sprinkle some iron filings evenly over the cardboard Tap it gently and observe the patterns which are formed. These patterns show the shape of the magnetic field between the two bar magnets. Copy this pattern as accurately as possible in the space provided in this manual.

3. Collect the iron filings and place a piece of graph paper over the cardboard. Draw the central force line between the two magnets by connecting the center of the north pole of one magnet to the center of the south pole of the other magnet. Check this line by placing a very small magnetic compass (2 cm or less in diameter) on the line near the north pole and slowly move it toward the south pole. The compass needle will always point in the direction of motion if the force line is accurate.

4. Draw a second force line roughly parallel to the original line by placing the small magnetic compass near the north pole of the bar magnet a short distance above the original force line. Place a dot on the paper directly behind the tail of the compass needle and another dot at the head of the compass needle. Advance the compass to a new position so that the tail of the compass needle coincides with the dot that was placed at the head. Place a third dot at the head of the compass needle in its new position. Keep advancing the compass in this manner until the second bar magnet is reached.

This experiment is best done by students working alone without lab partners While one student is working with the equipment, there is very little for a lab partner to do

APPARATUS PREPARATION

2 steel bar magnets
1 sheet cardboard or stiff paper
1 salt shaker of iron filings
1 tiny magnetic compass

Although concepts of magnetic field shapes can be learned quickly by sprinkling iron filings around a magnet, a great deal more can be learned by meticulously plotting the field with the aid of a tiny magnetic compass The assymetrical patterns due to the earth's field and the magnetism of steel building structures become readily apparent Although the results are quite rewarding, the work is tedious, and personality differerences among students who enjoy this kind of exercise are interesting to observe

EXPERIMENT • MAGNETIC FIELDS

45

NAME _____ CLASS HOUR _____

LAB PARTNERS _____ DATE _____

PURPOSE

In this experiment the concept of magnetic field will be developed by investigating the space around the magnets.

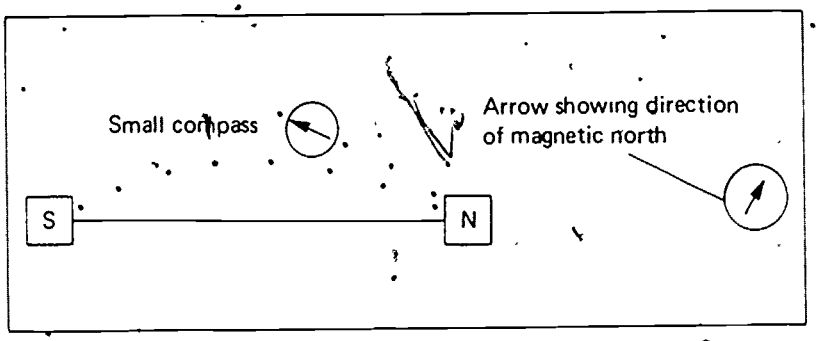

PROCEDURE

1. Place the north pole of a bar magnet under one end of a sheet of cardboard or stiff paper, and place the south pole of a second bar magnet under the other end.

2. Sprinkle some iron filings evenly over the cardboard Tap it gently and observe the patterns which are formed These patterns show the shape of the magnetic field between the two bar magnets Copy this pattern as accurately as possible in the space provided in this manual.

3. Collect the iron filings and place a piece of graph paper over the cardboard. Draw the central force line between the two magnets by connecting the center of the north pole of one magnet to the center of the south pole of the other magnet. Check this line by placing a very small magnetic compass (2 cm or less in diameter) on the line near the north pole and slowly move it toward the south pole. The compass needle will always point in the direction of motion if the force line is accurate.

4. Draw a second force line roughly parallel to the original line by placing the small magnetic compass near the north pole of the bar magnet a short distance above the original force line. Place a dot on the paper directly behind the tail of the compass needle and another dot at the head of the compass needle. Advance the compass to a new position so that the tail of the compass needle coincides with the dot that was placed at the head. Place a third dot at the head of the compass needle in its new position. Keep advancing the compass in this manner until the second bar magnet is reached.

This experiment is best done by students working alone without lab partners. While one student is working with the equipment, there is very little for a lab partner to do.

APPARATUS PREPARATION

2 steel bar magnets
1 sheet cardboard or stiff paper
1 salt shaker of iron filings
1 tiny magnetic compass

Although concepts of magnetic field shapes can be learned quickly by sprinkling iron filings around a magnet, a great deal more can be learned by meticulously plotting the field with the aid of a tiny magnetic compass The assymetrical patterns due to the earth's field and the magnetism of steel building structures become readily apparent Although the results are quite rewarding, the work is tedious, and personality differerences among students who enjoy this kind of exercise are interesting to observe

SUGGESTIONS AND TECHNIQUES

1. This experiment will work best with bar magnets which are made of steel or iron. It will be found that alnico magnets are so powerful that the iron filings tend to come together instead of remaining near their original positions.

2. The polarity of small magnetic compasses often reverses during the experiment when they are brought close to the bar magnets. They should be checked for polarity reversals frequently by moving them away from the experimental apparatus and see whether they point toward or away from magnetic north.

5. Repeat this procedure, starting from different spots near the north pole of the bar magnet. When you have finished, you should have a series of six to ten lines which are roughly parallel to each other drawn between the poles of the bar magnets.

6. Draw an arrow on your graph paper to indicate the direction of magnetic north in relation to the bar magnets

DATA

Drawing of magnetic field patterns shown by iron filings

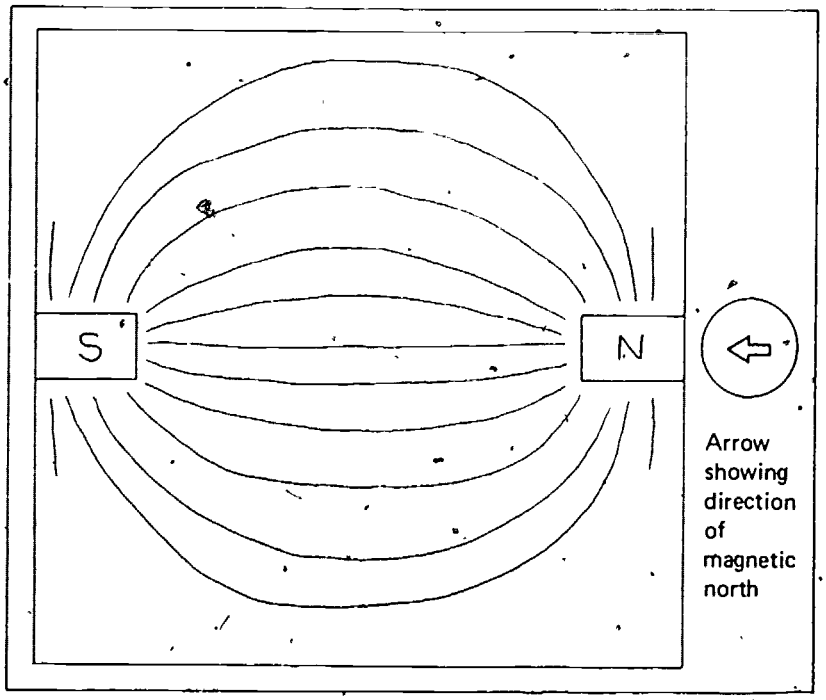

RELATED QUESTIONS AND ACTIVITIES

1. If you did Experiment 38, compare the patterns that are produced by electric field lines between positive and negative electrodes with the magnetic field lines between north and south magnetic poles.

The equipotential lines drawn for point electrodes are basically at right angles to the magnetic field lines for the poles of bar magnets.

NAME CLASS HOUR

2. Compare the symmetry of the magnetic field lines on either side of the two bar magnets. You will probably find that the two halves of the pattern are not symmetrical because the earth's magnetic field distorts the theoretical pattern between the two bar magnets. Check the magnetic field patterns carefully for this asymmetry and predict the direction of the earth's magnetic field in the laboratory. Verify this direction with the aid of a magnetic compass.

The steel framework of the school buildings as well as metal pipes running through the floors and ceilings sometimes create such strong magnetic fields that they obscure the magnetic field of the earth.

3. Repeat the magnetic field experiment several times with the apparatus held in different directions with respect to the earth's magnetic field. In each case predict the asymmetries which should occur in the patterns and verify your predictions.

This is a simple task but it requires more patience than most of the other tasks in this lab manual Students who have the patience and desire to complete such a task and draw meaningful conclusions should be encouraged to pursue scientific vocations or related work which requires these attributes.

EXPERIMENT • **FORCES BETWEEN CURRENT-CARRYING CONDUCTORS**

46

NAME _____ CLASS HOUR _____

LAB PARTNERS _____ DATE _____

PURPOSE

Current-carrying conductors exert forces on each other. The relationships that exist between those forces, the current, and the geometry of the conductors will be investigated in this experiment.

This experiment should be performed with students working in pairs. Not all students have the patience and the ability to make the precise movements and delicate adjustments which are required for this experiment

PROCEDURE

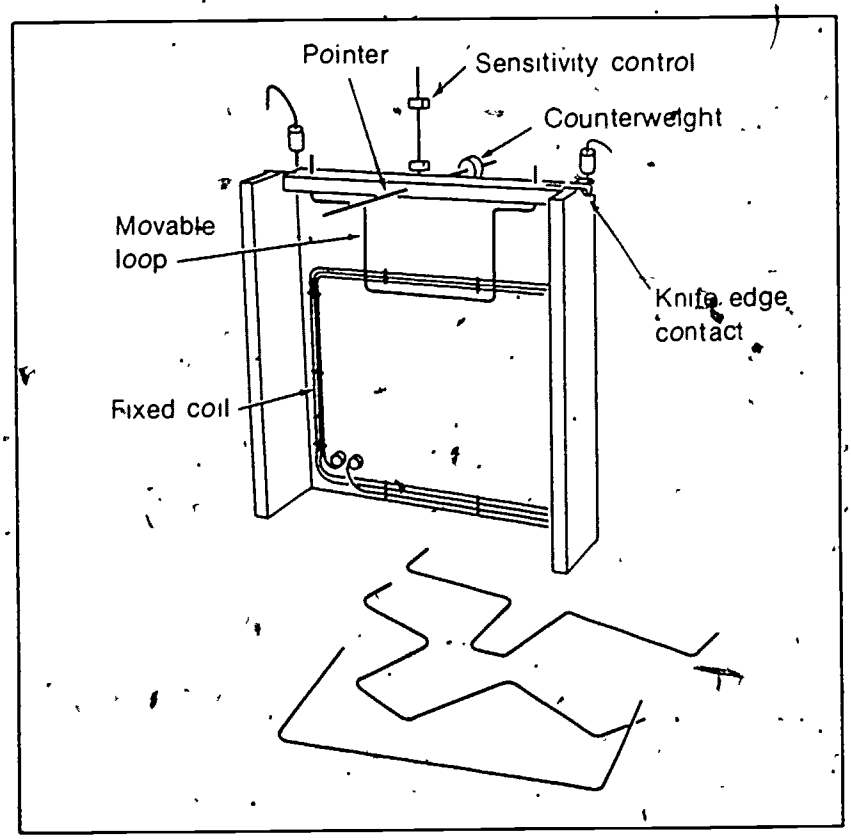

APPARATUS PREPARATION

The current-balance apparatus is available from suppliers of Project Physics equipment.

In addition to the basic current balance and the accessories that come with it the following items are required

- *2 ammeters, dc. 0 to 5A*
- *2 power supplies capable of producing about 6 VDC at 5 A*
- *1 small permanent magnet*
- *1 pair of tweezers for handling small weights*
- *1 set of small-wire weights*
  These can be made by removing the insulation from ordinary lamp cord, separating the strands, and cutting each strand into lengths of 1 cm, 2 cm, and 5 cm. Each centimeter of this wire has a mass of 17 and 18 mg and weighs about 1.7 x 10^{-4}N.

The general procedure for investigating forces between current-carrying conductors involves the use of a current balance. This device consists of a fixed bundle of wire (the fixed coil) and a movable loop of wire which is delicately suspended near the fixed coil. When there is current in each of these conductors, the fixed coil exerts a repelling force on the movable loop, which causes the movable loop to swing away from the fixed coil. Weights of known value are then added to the movable loop to restore it to its original position. Since the restoring force due to the added weight is equal to the force between the current-carrying conductors, we can measure the value of the

The current balances from different manufacturers vary quite a bit. It is important that you read the specific instructions which accompany the current balance and furnish supplementary notes for the students to save them time and help them obtain better results.

SUGGESTIONS AND TECHNIQUES

1. An acceptable power supply would be a 6-volt or 12-volt storage battery with a rheostat connected in series to vary the current. A low-voltage laboratory power supply will also work well if it is well filtered. In a poorly filtered power supply, the AC ripple which accompanies the DC output will cause the movable loop of the apparatus to vibrate.

2. To measure the distance between the movable loop and the fixed coil, it may be found to be more convenient to measure the distance between the nearest edges of each coil and add this value to the sum of the radii of the movable conductor and the fixed conductor. The radii of the respective conductors may be found with a micrometer caliper.

3. Before each trial, check the zero setting of the pointer to be sure it has not shifted.

force between the conductors. Proceed as follows

A. Setting Up the Apparatus

1. Place the frame upright on a sturdy table

2. There are several U-shaped, bent wire loops supplied with the equipment. Attach the largest of these loops to the horizontal suspension bar so that the center of the loop hangs about 0.5 cm in front of the fixed coil and is parallel to this coil (see illustration). When this has been done, the horizontal suspension bar and the loop should swing freely in front of the fixed coil, since there is very little friction at the knife edge contacts.

3. A long pointer and a balancing counterweight are also attached to the horizontal suspension bar. Adjust the position of the counterweight so that the pointer is horizontal

4. When the pointer is horizontal, fasten the zero position indicator to a ring stand, using any convenient clamp, and adjust the height of the indicator so that the tip of the pointer coincides with the center of the notch. A fine line drawn at the center of the notch will provide a convenient reference point to determine when the loop is hanging in its normal position and the pointer is horizontal

5. A sensitivity control, consisting of a vertical wire and a clip above the center of the horizontal bar, provides a means of adjusting the sensitivity of the apparatus as forces are applied Raising the clip raises the center of gravity of the moving part of the apparatus, making it swing more easily. Adjust this control for maximum sensitivity but be careful that the apparatus does not become so unstable that it topples over.

6. Connect the output of a variable, low-voltage DC power supply (6 to 8 volts at 5A) to the flat horizontal plates on which the horizontal suspension rests. This establishes an electric current from the power supply through the knife edge contacts to the suspended movable loop. If the power supply does not have a built-in ammeter, it will be necessary to connect an external ammeter (having a range 0 to 10A) in series with one of the power supply leads.

7. Check the operation of the circuit by turning on the power supply and slowly increasing the voltage while holding a small permanent magnet near the movable loop. As the voltage is increased,

the loop should start swinging either toward or away from the permanent magnet as a result of the force exerted on the current-carrying loop by the magnet. By reversing the permanent magnet, you should be able to make the loop swing in the opposite direction.

8 Connect a second variable DC power supply and ammeter to the fixed coil of the apparatus, making an independent circuit.

9. Turn on both power supplies and observe the effect of the force exerted on the movable loop by the fixed coil when there is a current through each.

10 Interchange the connections between one of the power supplies and the terminals on the apparatus to which it is connected This causes one of the currents to reverse its direction Notice that this also changes the direction of the force on the movable loop Fix the connections so that the pointer will move up whenever the power supplies are turned on.

11 A roll of thin wire is supplied with the apparatus Cut this wire into lengths of 1 cm, 2 cm, 5 cm, and 10 cm. Bend each length into an S shape so that it may be hung on the notch in the pointer, or from one of the other lengths in order to restore the pointer to its zero position. Have one set of wire weights on hand and make additional wire weights as required during the experimenting which follows

This completes the preliminary adjustments to the apparatus

It is very convenient to measure units of force in terms of centimeters of No 30 wire To find the actual weight of a centimeter of this wire, a useful technique is to have the students find the mass of a long length of the wire on a triple beam balance.

B. Finding the Relationship between Force and Current

1 Adjust the position of the horizontal suspension bar so that the movable loop is parallel to the top section of the fixed loop and hangs about 0.5 cm in front of it.

2. Adjust the variable power supply that is connected to the fixed coil so that the current is 3 A. With no current in the movable loop, adjust the counterweight so that the pointer is horizontal and coincides with the zero position mark.

For example, assume that a 1-meter length of wire has a mass of 1 75 g, or 1 75 x 10^{3} kg, on a triple beam balance. To find its weight in newtons, we multiply the mass in kilograms by 9 8 N/kg and obtain 1 7 x 10^{2} N One cm would weigh only one hundredth of this, or 1.7 x 10^{-4} N.

3. Adjust the power supply that is connected to the movable loop so that its ammeter reads 0.5 A. This should create a force which causes the loop to be repelled and the pointer to move up.

4 Add wire weights to the notch in the pointer until it is restored to its zero position. In data chart I, record the total number of centimeters of wire that were required.

5. Increase the current in the movable coil in half-ampere steps until a total of 5 A is reached. At each step find the amount of wire weights that is needed to restore the pointer to its zero position and record this in the data chart.

6. Prepare a graph with force (expressed in centimeters of wire) along the vertical axis and current (in amperes) along the horizontal axis.

C. Relationship between Force and Distance Separating Current-Carrying Conductors

1. Adjust each of the variable power supplies so that a current of about 4.5 A is in each of the circuits.

2. Turn off both power supplies and adjust the horizontal suspension bar so that the horizontal distance between the fixed coil and the bottom of the movable loop is 0.5 cm and the pointer is horizontal at the zero position mark. The distance can be set with the aid of a pair of dividers or a compass of the type that is used to draw circles. Using a centimeter scale, set the points of the compass 0.5 cm apart. Then use the compass or dividers as an aid in adjusting the distance between the parallel wires. The distance between the wires should be measured between the *centers* of the two wires.

3. When you are certain that the distance between the movable loop and the fixed coil is exactly 0.5 cm and the pointer is at the zero position mark, turn on both power supplies and check that each of the ammeters still reads 4.5 A.

4. Add wire weights to the notch of the pointer until it is restored to the zero position mark Record the number of centimeters of wire in data chart II.

5. Increase the distance between the fixed coil and the movable loop in half centimeter steps until the two are 6.0 cm apart. Each time the distance is increased, check the zero setting of the pointer with the current turned off. Then, with the current on, add wire weights to restore the pointer to its zero position For each distance, record the required balancing weight in the data chart.

6. Plot the data on a graph with force (measured in centimeters of wire) on the vertical axis and distance between the conductors (in centimeters) along the horizontal axis.

D. Relationship between Force and the Length of a Current-Carrying Conductor

1. Adjust the position of the horizontal suspension bar so that the movable loop is approximately 0 5 cm in front of the fixed coil. Set the counterweight so that the pointer is horizontal and coincides with the zero position mark. Turn on the power supplies and adjust the current in each of the circuits to approximately 4 A. Add wire weights to the notch on the pointer until the pointer is restored to the zero position mark. Record the weight (in centimeters of wire) in data chart III.

2. Turn off the power supplies, being careful not to disturb their settings Remove the movable loop from the horizontal suspension bar and substitute a second loop that has a shorter horizontal section in its center portion. Adjust the apparatus so that the fixed and movable wires are the same distance apart as they were in Step 1 and turn on both power supplies. Check that the current in each circuit is the same as before. Record the amount of wire weights that must be added to the pointer notch to bring the movable loop back to its zero position. Also record the length of the wire in the center horizontal section of the loop.

3. Repeat the above procedure one or two more times, substituting the other loops. In each case, record the amount of wire weights required to bring the pointer back to its zero position and the length of the center horizontal section of the loop.

EXPERIMENT 46. FORCES BETWEEN CURRENT-CARRYING CONDUCTORS

NAME CLASS HOUR

4. Plot a graph with the restoring force (measured in centimeters of wire) along the vertical axis and the length of the center horizontal section of the movable conductor along the horizontal axis.

See sample graph at bottom of this page.

DATA

I Force vs Current in Conductor

TRIAL	Current (A) I =	Force (cm of wire) F =
1	0.5	2
2	1.0	3
3	1.5	4
4	2.0	5
5	2.5	6
6	3.0	7
7	3.5	8
8	4.0	9
9		
10		
11		
12		

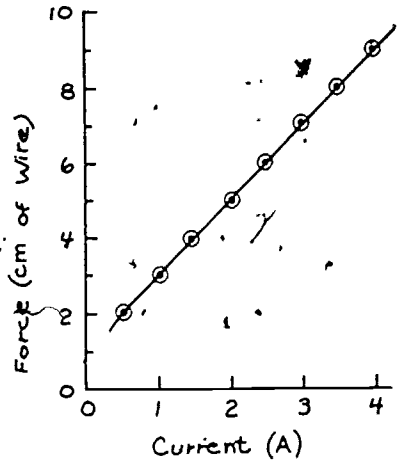

II Force vs Distance between Conductors

TRIAL	Distance (cm) X	Force (cm of wire) F =
1	0.5	8
2	1.0	5
3	1.5	3
4	2.0	3
5	2.5	2
6	3.0	2
7	3.5	2
8		
9		
10		
11		
12		

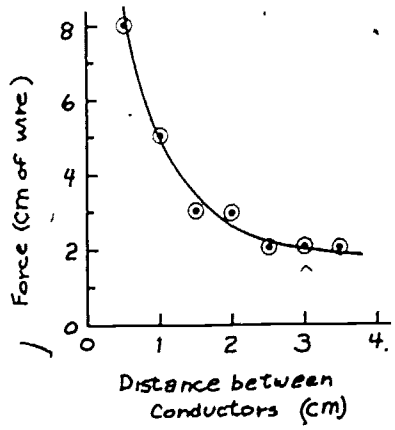

III Force vs. Length of Conductors

TRIAL	Length (cm) L =	Force (cm of wire) F =
1	31.0	8
2	16.0	5
3	7.0	[illegible]
4	3.5	[illegible]

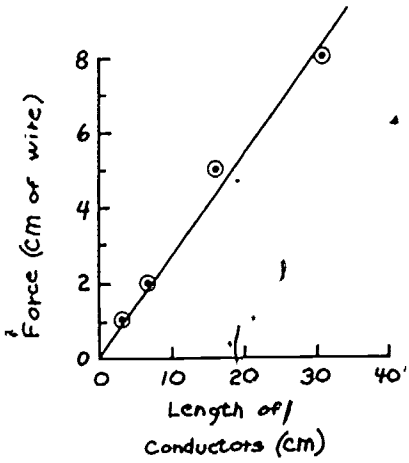

RELATED QUESTIONS AND SUGGESTED ACTIVITIES

1. Summarize your results by giving the relationships between the force between two current-carrying conductors and

a) the magnitude of current: _____

The force increases as current in one of the conductors increases.

b) the distance between conductors: _____

There is an inverse relationship between the force and distance between conductors that are parallel to each other

c) the length of the parallel portion of conductors: _____

The force increases in direct proportion to the length of the parallel portion of conductors.

The force between parallel current-carrying conductors is

$$F = \frac{KI^2L}{d}$$

where *F is the force (in N)*
I is the current (in A)
L is the length of parallel conductors (in m)
d is the distance between conductors (in m)
K is 2×10^{-7} N/A²

Thus $I = \sqrt{\frac{Fd}{KL}}$

2. The ampere is a unit of current which is now defined in terms of the force that it will produce between two parallel, infinitely long, current-carrying conductors. Connect the fixed and movable coils of the current balance so they are in series with the same power supply. By definition, the ampere is the current in two parallel, infinitely long conductors, 1 meter apart, which produces a force of 2×10^{-7}N for each meter of conductor length. Set up an experiment to test the accuracy of an ammeter.

The movable coil, 10 windings of the fixed coil, and an ammeter were connected in series with a variable power supply. Using the 32-cm movable coil, this gave an effective length of 320 cm (3.2 m) of parallel conductors. The two coils were 1.0 cm apart Wire weights were added to the balance and the power supply was adjusted until the balance was restored to equilibrium. Data are given in the margin at the left.

The weight of the wire weights was calculated by multiplying the number of cm of wire by 1.7×10^{-4} N/cm (see p 205)

Sample data:
$d = 1.0 \times 10^{-2}$ m
L = 3.2 m

cm of wire	calc I (A)	ammeter (A)	% error
1	1.6	2.0	20%
2	2.3	2.5	8%
4	3.2	3.5	9%
5	3.6	4.2	14%
6	4.0	4.6	13%
7	4.3	4.8	10%

3. All of the instructions for this experiment require the movable loop to be perfectly parallel to the fixed coil at all times. Predict what would happen if these two conductors were not parallel to each other. Check your results by experimentation with the apparatus.

If the movable coil is not parallel to the fixed coil, some parts of the conductors will be closer than others. If the distance is taken at the midpoint of the conductors, there is still an error because it is only the parallel components of the magnetic forces that interact. Thus, the restoring force for parallel conductors is greater than the force for nonparallel conductors that are the same length, are the same average distance apart, and carry the same current

4. Set up an experiment to find the force that the earth's magnetic field exerts on a current-carrying conductor. With the fixed coil of the apparatus disconnected, adjust the sensitivity control of the movable loop to maximum sensitivity. Adjust the power supply so that the current in the movable loop is about 3 A when the power

NAME CLASS HOUR

supply is turned on. Set the apparatus on a sturdy table so that the bottom of the movable loop is aligned in an east-west direction. When the current is turned on, find the restoring force that is necessary to compensate for the displacement of the pointer from the zero position mark. Rotate the entire apparatus in steps of 5° until the movable loop is aligned in a north-south direction. At each step, record the magnitude of the restoring force when the same current is turned on.

Angle A =	Restoring force (cm of wire) F =
0	0.5
5°	0.5
10°	0.5
15°	0.5
20°	0.5
25°	0.5
30°	0.5
35°	0.5
40°	0.5
45°	0.5

Angle A =	Restoring force (cm of wire) F =
50°	0.5
55°	0.5
60°	0.5
65°	0.5
70°	0.5
75°	0.5
80°	0.5
85°	0.5
90°	0.5

This experiment is guaranteed to mystify and challenge the better students in a physics class... especially when they do the experiment carefully and obtain data such as the sample data at the left.

The explanation is simple. One must know from his knowledge of the earth that the direction of the earth's magnetic field is very close to vertical over most of the United States. Only 20% of this field produces the south-to-north horizontal component which operates a magnetic compass.

The current balance responds to the comparatively large vertical component of the earth's magnetic field but is not sensitive enough to detect the variations caused by the minor effects of different horizontal orientations.

What is the largest restoring force required?

All of the restoring forces appear to be identical.

EXPERIMENT • **ELECTRON BEAM DEFLECTION**

47

NAME _____ CLASS HOUR _____

LAB PARTNERS _____ DATE _____

PURPOSE

To deflect an electron beam by magnetic and electrostatic fields and to predict the direction and magnitude of such deflections.

This experiment can be done with students working in groups of two to four. The apparatus is comparatively expensive, and hardly any schools will have more than one or two sets of this apparatus with the accessory power supplies.

APPARATUS PREPARATION

The sample data was obtained with the cathode ray oscilloscope sold by the Klinger Scientific Apparatus Corp., although any oscilloscope will work to some extent to show the principles of beam bending. The Klinger tube uses only 250 volts, which is relatively safe for student use and permits very large deflections with comparatively weak magnets.

The following accessories are called for in this experiment.

- *1 meter stick*
- *1 sheet of metric graph paper*
- *transparent tape*
- *1 cylindrical magnet*
- *1 electromagnet*
- *a variable 0 to 250V DC power supply*
- *1 voltmeter to cover this range*
- *a variable 0 to 50V DC power supply*

PROCEDURE

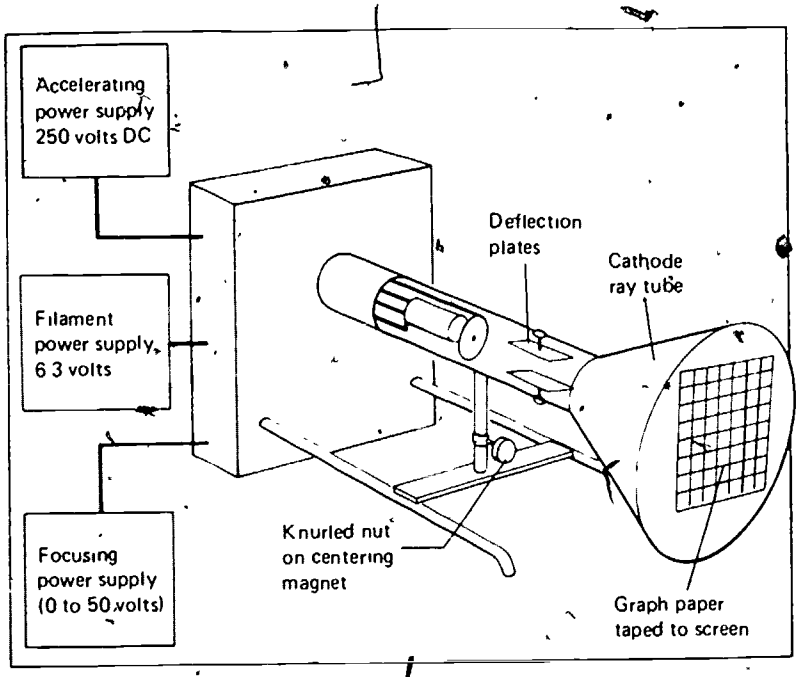

A. Producing an Electron Beam

1. Heat the filaments of the cathode ray tube (CRT) by applying a voltage of 6.3 volts AC or DC to the filament terminals at the base of the CRT. A battery supply is preferable to an AC source because there is no ripple which tends to vibrate the electron beam. When the power supply is connected, the filaments should glow brightly.

2. Apply a DC voltage of 200 to 250 volts between the accelerating anode of the CRT and one of the filament terminals by connecting them to a second power supply. The positive terminal of the power supply must be connected to the anode. When this has been done, the electrons which have been boiled off the hot filament will be accelerated through the tube and strike the screen, producing a luminous spot on it.

3. Connect a third power supply, which can produce a variable DC voltage (0 to 50 volts), to the CRT. Connect the negative terminal of the power supply to the focusing cylinder and the positive terminal to the common connection at the CRT filament. When this power

SUGGESTIONS AND TECHNIQUES

1. Shut off the power supplies whenever the equipment is not in actual use. This practice will extend the life of the CRT.

2. When focusing the electron beam on the screen, do not make the spot too bright, or the screen may be damaged.

3. To avoid undesired effects caused by the earth's magnetic field in the laboratory, align the tube so that its long axis is parallel with the magnetic field in the laboratory. In this position, any effects that are due to the earth's magnetic field will be negligible.

4. If the laboratory can be darkened or if the tube can be observed under a blanket which screens out extraneous light, the actual path of the electron beam inside the tube can be seen. There is a small amount of neon gas included in the CRT for this purpose.

5. When measuring the beam deflection caused by a permanent magnet, use a cylindrical alnico magnet which is at least six inches long. Shorter magnets may also be used but the observed deflections will be proportionally smaller.

6. To measure the distance between the cylindrical magnet and the tube as you move the magnet closer to the tube, slide it along a meter stick.

supply is turned on and the voltage is increased, the walls of the focusing cylinder become negative with respect to the filament and repel any electrons which are streaming through the center of the cylinder. This causes the electrons to converge and focus into a fine spot on the cathode ray tube screen. Adjust the voltage of this power supply to produce the smallest spot.

4. Center the spot on the face of the CRT by adjusting the position of the cylindrical magnet which is attached to the aluminum rod that supports the center of the tube. This magnet may be adjusted by loosening the knurled nut and sliding the collar up and down or by tightening the nut and then rotating the magnet on its own axis.

This completes the preliminary adjustments.

B. Beam Deflection by a Permanent Magnet

1. Using some cellulose or masking tape, fasten a large square of graph paper over the screen of the cathode tube. When the power supplies are turned on and the preliminary adjustments have been completed, it should be possible to see the illuminated spot through the graph paper.

2. Hold a cylindrical magnet approximately 20 cm above the neck of the CRT with its north pole facing down. In 1-cm steps, lower the magnet until it reaches the neck of the tube. At each step, record the deflection of the electron beam as seen on the graph paper.

3. Repeat the procedure of Step 2, holding the magnet so that the south pole is down.

4. Repeat the above procedure holding the permanent magnet about 20 cm to the left of the tube with its north pole facing the tube. Record the deflection data in data table I as the magnet approaches the tube in 1-cm steps.

5. Repeat the above procedure once more, starting with the permanent magnet about 20 cm to the right of the tube and the north pole facing the tube. Again, record the deflection of the luminous spot as the magnet approaches the tube in 1-cm steps.

6. Using the same axes, prepare a graph of beam deflection vs. magnet distance for each of the four sets of data. *See sample graph*

C. Beam Deflection with a Current-Carrying Coil

1. With a piece of graph paper taped over the screen of the CRT and with the preliminary adjustments completed, clamp a coil of wire to the mounting ring above the neck of the CRT. Connect a 6-volt battery and a variable resistance in series with the coil. Connect a DC voltmeter across the terminals of the coil to measure the voltage across it as the resistance changes.

2. Note the position of the illuminated spot on the graph paper when no voltage is applied to the coil. Increase the voltage across the coil in half-volt steps, recording the beam deflection on the CRT screen as the voltage at the coil terminals is increased. Use data table II.

3. Prepare a graph of beam deflection vs. coil voltage. *See sample graph*

D. Beam Deflection by an Electrostatic Field

1. With the preliminary adjustment completed, and a piece of graph paper taped over the screen of the CRT, connect a variable DC power supply having a range from 0 to 50 volts to the two electrostatic deflection plates that are imbedded in the neck of the CRT. The negative terminal of the power supply should be connected to the lower deflection plate and the positive terminal to the upper deflection plate. It is important that a separate power supply be used for this purpose. Do not attempt to use the same power supply that is furnishing the focusing voltage.

2. Starting with zero volts across the electrostatic deflection plates, increase the voltage in 5-volt steps to 50 volts, recording the deflection of the spot on the screen at each step. Data table III.

3. Plot a graph of beam deflection vs. voltage across the electrostatic deflection plates. *See sample graph*

DATA

I. Beam Deflection by Permanent Magnet

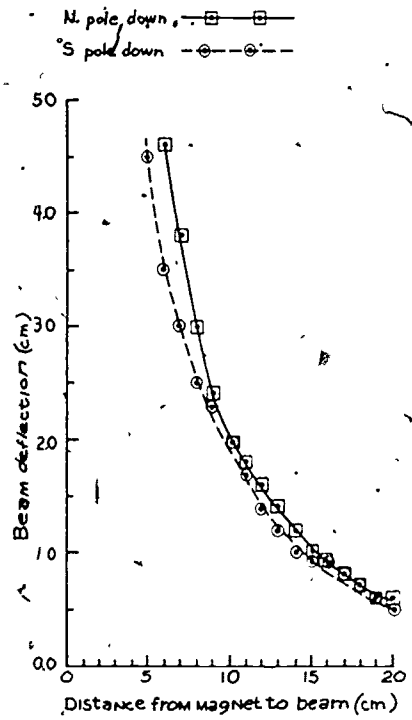

Magnet distance	Beam Deflection A N. Pole down	B S. Pole down	C N. Pole left	D N. Pole right
20 cm	0.6	0.5	0.6	0.6
19	0.6	0.6	0.6	0.7
18	0.7	0.7	0.7	0.7
17	0.8	0.8	0.8	0.7
16	0.9	0.9	0.9	0.8
15	1.0	0.9	1.0	1.0
14	1.2	1.0	1.2	1.2
13	1.4	1.2	1.3	1.3
12	1.6	1.4	1.5	1.5
11	1.8	1.7	1.7	1.7
10	2.0	2.0	2.0	1.9
9	2.4	2.3	2.4	2.3
8	3.0	2.5	2.9	2.6
7	3.8	3.0	3.5	3.2
6	4.6	3.5	4.1	off scale
5	off scale	4.5	off scale	
4		off scale		
3				
2				
1				

Ask the students to note the direction in which the spot is deflected, for a person looking at the face of the CRT head-on.

Pole	*Spot*
N. pole down	*left*
S. pole down	*right*
N. pole left	*down*
N. pole right	*up*

EXPERIMENT 47. ELECTRON BEAM DEFLECTION

NAME CLASS HOUR

II. Beam Deflection with Current-Carrying Coil

Coil Diameter Dia = 3 cm

Coil Length L(c) = 5 cm

Number of turns of wire N = 600

Distance between coil and beam X(c) = 10 cm

DC resistance of coil R(c) = 5 ohms

TRIAL	Coil voltage (volts) v =	Beam deflection (cm) s =
1	0	0
2	1	0.3
3	2	0.4
4	3	0.7
5	4	0.9
6		

	Coil voltage (volts) v =	Beam deflection (cm) s =
7	5	1.0
8	6	1.3
9		
10		
11		
12		

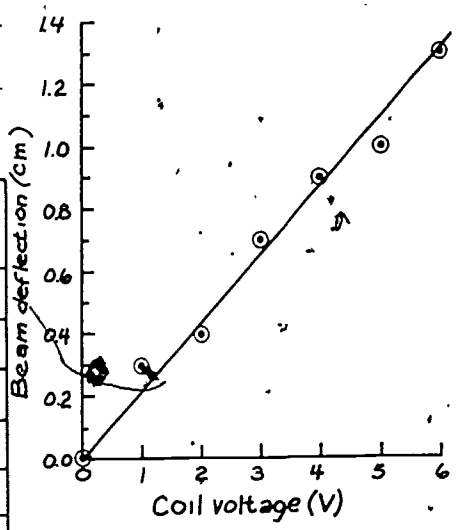

III. Beam Deflection by an Electrostatic Field

Length of electrostatic deflection plates L(P) = 20 cm

Distance between plates X(p) = 10 cm

TRIAL	Plate voltage (volts) v =	Beam deflection (cm) s =
1	0	0
2	10	0.2
3	20	0.3
4	30	0.5
5	40	0.6
6		

	Plate voltage (volts) v =	Beam deflection (cm) s =
7	50	0.7
8	70	1.1
9	80	1.8
10	90	2.5
11	100	3.2
12		

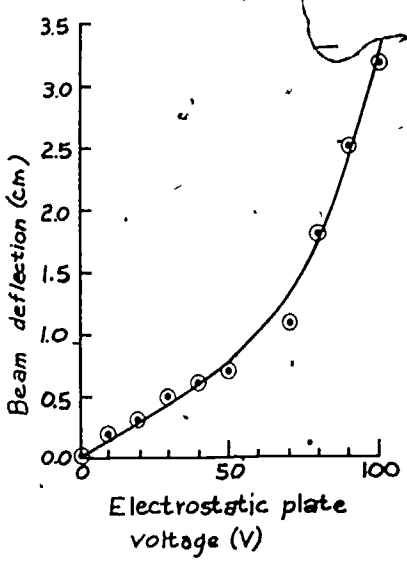

RELATED QUESTIONS AND SUGGESTED ACTIVITIES

1. Examine your graphs and tell how the electron beam is affected by each of the following. If you can see any simple relationships among the data, state what they are.

a) An approaching north pole of a permanent magnet.

As the north pole gets closer, the beam is deflected at an increasing rate.

EXPERIMENT • PHOTOELECTRIC EFFECT

48

NAME CLASS HOUR

LAB PARTNERS DATE

PURPOSE

In this experiment you shall see how the amount of current and the energy of emitted electrons depend on the nature of the light that shines on the surface of a metal.

PROCEDURE

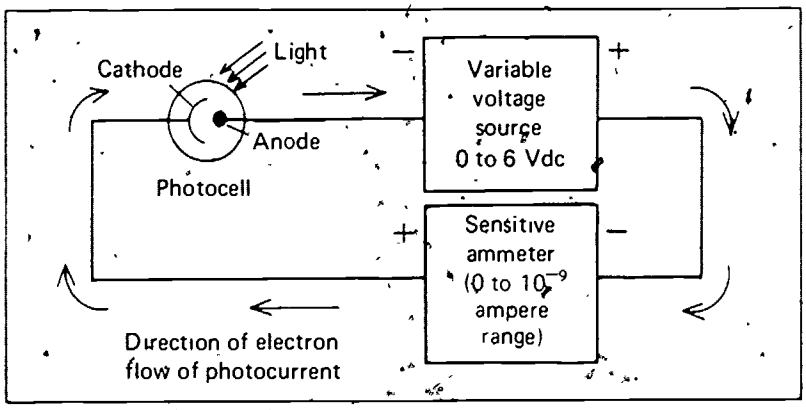

A photocell, a variable voltage source, and a sensitive ammeter are connected in a circuit as shown in the diagram. When light is directed at the photocell, electrons flow in the direction indicated and form a current that is read on the ammeter. With the variable voltage source set to zero, you can find out how much current is produced by light of differing intensity and color. Next, by applying a voltage that opposes the direction of the photocurrent, you can calculate the energy that is needed to stop the electrons which are ejected from the photocell by light of differing intensity and color.

A. AMOUNT OF CURRENT PRODUCED BY LIGHT OF DIFFERING INTENSITY AND COLOR

1. Remove the variable voltage source from the circuit and substitute a wire to complete the circuit.

2. Cover the photocell so that it is in complete darkness and set the ammeter to zero.

3. Shine light on the photocell and record the current that is produced as the light is made brighter or dimmer. Data chart I. The intensity of the light can be controlled by varying the voltage applied to an electric lamp, by changing the distance between the lamp and the photocell, or by partially covering and exposing the lamp.

4. Shine light of different colors on the photocell and record the current that is produced by each in data chart II. Different colors can be obtained by using lamps of different colors, by using white light and covering it with colored filters, or by passing white light through a triangular prism or through a diffraction grating.

This experiment should be done by students working in pairs.

APPARATUS PREPARATION

photocell
variable voltage source, 0 to 6V dc
ammeter, range 0 to 10^{9} A, or high-impedance voltmeter wire

Apparatus for the photoelectric effect experiment is comparatively expensive and difficult to operate if precise, accurate results are required. However the general principles of photoemission and a calculation of Planck's constant with the correct order of magnitude and an error of about 40% is fairly easy to obtain in the student lab, as shown by the sample data given here.

As manufacturers cut their costs by using inexpensive but precise and reliable transistors and integrated circuits, it will not be long before inexpensive apparatus is available.

Meanwhile, try using the low-voltage scale of a vacuum-tube or solid-state voltmeter The voltage indications are proportional to the photocurrent when the probes are connected directly to the terminals of a photocell.

Almost any type of photocell will work. If none is available, you might try borrowing a photocell from the school's sound movie projector.

SUGGESTIONS AND TECHNIQUES

1. An ordinary laboratory ammeter is not sensitive enough to detect the weak currents produced by the photocell. Be sure to use an electrometer, or amplifier-ammeter combination, that is specially manufactured for this purpose.

2. A reliable variable voltage can be made by connecting two flashlight cells across the ends of a rheostat. The output voltage is then obtained by connecting a wire to one of the ends of the rheostat and another wire to its center tap.

3. If the variable voltage source does not already contain a voltmeter, connect one across the output terminals of the source. Almost any dc voltmeter will work if its full scale range is anywhere from 3 to 10 volts

4. Be sure that the phototube is completely screened so that no daylight or any other unwanted light can strike the cathode.

5. Although the intensity of a lamp may be increased by applying more voltage, many incandescent lamps will also change color when they become brighter. To avoid this, it is usually better to use screening or vary the lamp distance to adjust the intensity.

6. A mercury lamp is an excellent source of light for this experiment. It produces four colors in the visible range with known frequencies. Individual colors may be selected easily with filters. The colors and their frequencies are

Color	*Frequency (in Hz)*
yellow	5.19×10^{14}
green	5.50×10^{14}
blue	6.88×10^{14}
violet	7.41×10^{14}

7. To make a very rough measurement of the stopping voltage, increase the voltage until the ammeter reads zero. Record the voltmeter reading at this time For more accurate measurements, however, it is necessary to continue applying reverse voltage until the ammeter reading has fallen a fraction of a volt below zero. As the voltage is varied in this region a point will be reached when the increase in voltage has little, if any, effect on the ammeter reading. When this condition has just been reached, read the voltmeter for the actual stopping voltage. The reason that this procedure is necessary for accurate determinations of the stopping voltage is that the photocells are not perfect and they all have a certain amount of "dark current" which flows in the wrong direction through the tube

NAME CLASS HOUR

B. ENERGY OF ELECTRONS PRODUCED BY LIGHT OF DIFFERING INTENSITY AND COLOR

1. Connect the variable voltage source in the circuit as shown in the diagram with the negative side of the source facing the anode of the photocell. If you are not sure which terminal is the anode, connect the source either way in the circuit and perform the test in the next step to find out if you were lucky and connected it correctly.

2. With the variable voltage set to zero, shine light on the photocell. Adjust the light intensity until the ammeter reads about midscale. Watch the ammeter as you slowly increase the voltage of the variable source. If the source is connected correctly, it opposes the photocurrent, and the reading of the ammeter decreases as the voltage is turned up.

3. Record the voltage which is needed to completely stop the photocurrent. Data chart III Increase or decrease the light intensity and record the stopping voltage that must be applied to stop the electrons in each case.

4 Shine light of different colors on the photocell and record the stopping voltage that is associated with each color Data chart IV

DATA

I. Variation of Current with Intensity

	Intensity of the light	Ammeter reading (Amperes) I =
A	Dim	22×10^{-8}
B	Normal	46×10^{-8}
C	Bright	78×10^{-8}

The fact that the photocurrent is directly proportional to the intensity of the light can be observed with the aid of any type of photometer, even those which are used for photography.

II. Variation of Current with Color

	Color of the light	Ammeter reading (Amperes) I =
A	Green	43×10^{-8}
B	Yellow	62×10^{-8}
C	Blue	58×10^{-8}
D	Red	60×10^{-8}

The absorption of incident light by the filter will cause dark filters to absorb more light than lighter filters. Unless the students are sure that the light transmitted by each filter has the same intensity, they will be likely to obtain data such as that shown here.

Green light was used.

III. Variation of Stopping Voltage with Intensity

	Intensity of the light (Describe)	Stopping voltage (Volts)
A	Bright	0.45
B	Normal	0.45
C	Dim	0.45

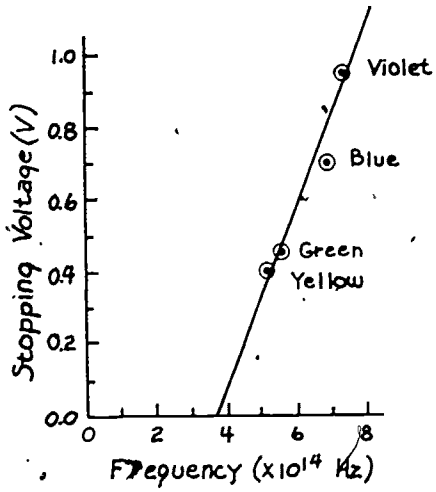

IV. Variation of Stopping Voltage with Color

	Color of the light	Frequency	Stopping voltage (Volts)
A	Violet	7.41 X 10^{14} Hz	0.95
B	Blue	6.88 X 10^{14} Hz	0.70
C	Green	5.50 X 10^{14} Hz	0.45
D	Yellow	5.19 X 10^{14} Hz	0.40
E			

RELATED QUESTIONS AND SUGGESTED ACTIVITIES

1. How is the amount of current related to the intensity of the light falling on the photocell?

The amount of photocurrent increases as the intensity of the light increases.

2. How does the amount of current vary with the frequency of the light? (Red has a low frequency, followed by yellow, green, blue, and violet in order of increasing frequency.)

Using filters, there is no definite relationship between color (frequency) and the amount of photocurrent. When each frequency has the same intensity, there is no difference in photocurrents that are produced by different frequencies.

3. The stopping voltage is directly proportional to the energy of the electrons emitted at the cathode. How does the energy of the electrons vary with the brightness of the light?

Using light of the same frequency (green), it was found that the original brightness of the light had no effect on the stopping potential.

4. How does the energy of the electrons emitted at the cathode vary with the frequency of the light?

As the frequency is increased, the energy of the photoelectrons also increases. Theoretically the energy increases in direct proportion to the frequency, but this could not be confirmed with the apparatus we used.

EXPERIMENT 48. PHOTO ELECTRIC EFFECT

NAME CLASS HOUR

5. Analyze your data and calculate Planck's constant, which relates the energy of light and its frequency. To do this, make a graph of stopping voltage vs. frequency of light. Draw the best straight line connecting your points. Planck's constant *h* is found by selecting any two points on the line and using the relationship

$$h = e\frac{\Delta V}{\Delta f}$$

where e is the charge on an electron (1.6×10^{-19}C)

ΔV is the voltage difference between the two points on the graph

Δf is the frequency difference between the points

See sample graph. The following values were used in calculating Planck's constant:

$e = 1.6 \times 10^{-19}$ C
$\Delta V = 1.0$ V
$\Delta f = 4.0 \times 10^{14}$ Hz

4.1×10^{-34} 38%

Calculated value of Planck's constant is h = 4.1×10^{-34} J-sec.

Using the accepted value of 6.6×10^{-34} J-sec for Planck's constant, calculate your percentage error.

E = 38%

EXPERIMENT • HALF-LIFE

49

NAME CLASS HOUR

LAB PARTNERS DATE

PURPOSE

The time that is required for half the nuclei in any size sample of a radioactive element to decay is called its half-life. In this experiment you shall measure the half-life of the radioisotope barium-137^m.

PROCEDURE

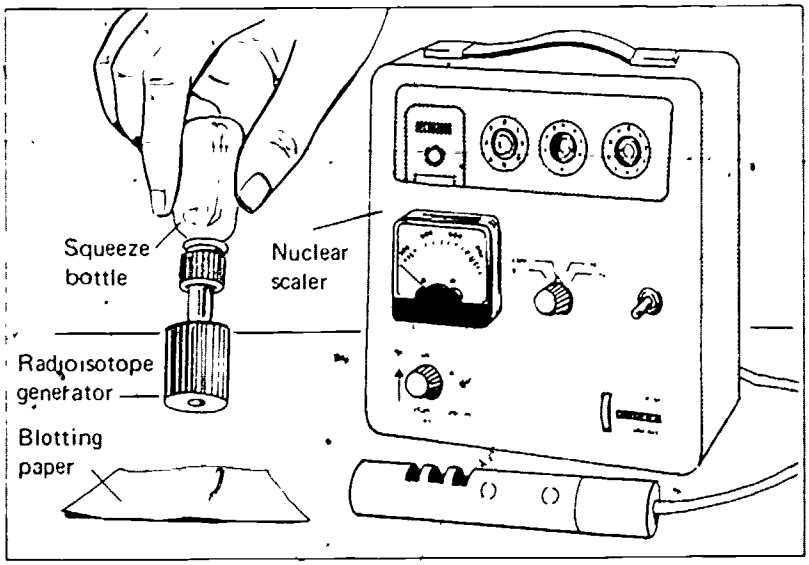

To measure the half-life during the relatively short time that is available during a laboratory period, a radioactive element with a relatively short half-life is freshly prepared and then tested for radioactivity with a nuclear scaler.

1. Turn on the nuclear scaler and allow it to warm up for five minutes.

2. With all radioactive materials removed from the vicinity of the nuclear scaler, measure the background radioactivity in the laboratory. To do this, find the total number of counts that are indicated for three 1-minute intervals and record the activity in counts per minute in each case. If the values differ by more than three or four counts per minute, it is a good idea to measure the background activity several additional times. Record in data chart I.

3. Bring the radioisotope generator close to the Geiger tube of the scaler to be sure that the generator is radioactive. The count rate should increase sharply.

4. Remove the rubber caps from the top and bottom of the

This experiment should be done by students working in pairs

APPARATUS PREPARATION

radioisotope generator set for barium-137^m
nuclear scaler with Geiger tube
protective goggles and gloves

The radioisotope generator set costs about $50 and should last for many years. It is available from many of the major scientific supply companies.

Good data is obtained with almost any nuclear scaler and a side-window or end-window Geiger tube. A scaler keeps an actual record of detected nuclear events, or counts. The ordinary Geiger counter, or ratemeter, also detects nuclear events but instead of giving a cumulative record of counts, it has a meter which indicates the average number of counts per minute at any given instant. Because nuclear decay occurs in a random fashion, a scaler is preferable to a ratemeter for this experiment. The ratemeter will work but the needle bounces around a great deal, making it difficult for students to record readings. If a ratemeter is used, however, tolerable results can be obtained by having students record the reading every ten seconds for ten minutes. A half-life curve may then be plotted on graph paper with a smooth curve drawn between points. Using this technique, a 20% error in results can be expected, compared with the 5% error obtained with a scaler.

SUGGESTIONS AND TECHNIQUES

1. Be sure to replace the protective rubber covers on the radioisotope generator whenever it is not in actual use. Any dust or dirt entering the generator will clog the filters and greatly shorten its life.

2. There are many different models of nuclear scalers in use. To make sure that you know how to operate the controls and read the indicators of the scaler, consult the manufacturer's instructions or ask your instructor.

3. Because the half-life of the radioisotope barium-137$_m$ is so short, be sure to obtain a fresh sample from the generator and start counting with your scaler with as little delay as possible

4. If the solution in the plastic bottle should all be used up, a fresh solution can be made by diluting 3.3 ml or 12 molar HCl in 1,000 ml of distilled water. Then dissolve 9 g of reagent quality NaCl in this solution

5. For safety, do not eat, drink, or apply cosmetics in the laboratory during this experiment.

6. It is important to make several determinations of the half-life and average them for the most accurate results.

7. If the laboratory period is long, it is a good idea to recheck the background activity in the lab at the end of the experiment to be sure that it has not changed while you were working.

8. When plotting the data on a graph, place each point at center of the time interval during which the data was obtained. Thus, the first point would be placed at the time 0.5 min.

The newer models of the radioisotope generators are packaged with chemical concentrates that can be mixed with water in specified amounts to make fresh solutions

generator and also remove the protective cap from the top of the plastic squeeze bottle.

5. Press the spout of the squeeze bottle into the large opening of the generator. Gently squeeze the bottle to force some of the acid solution into the generator. Discard the first few drops that come out of the bottom of the generator. Usually these will not contain much radioactive material. Allow the next few drops to soak into a piece of blotting paper for analysis.

> *Caution:* The solution that is fed into the generator contains hydrochloric acid and must be handled with care. Wear protective goggles and gloves when handling this material and be sure to wipe up any liquid that spills.

6. Place the Geiger tube of the scaler as close to the blotting paper as possible, but be careful that the liquid does not touch the metal of the probe.

7. Set the scaler to zero and let the scaler count the radiations for a total of 10 minutes. Record the scaler reading precisely at the end of each minute.

8. Calculate the average activity in counts per minute for each of the intervals. Correct each of these by subtracting the background activity and record these in data chart II.

9. Plot the data on a sheet of graph paper with the time in minutes on the horizontal axis and the corrected activity in counts per minute on the vertical axis. Connect the data points with a curve that is drawn as smoothly as possible between the points.

See sample graph below. The time values plotted were those in mid-interval, since the activity values are the average for the time interval.

10. The activity of a sample of a radioactive element is proportional to the number of radioactive nuclei in the sample. Select a point on the graph where the activity is relatively high. Find another point on the graph which corresponds to an activity that is exactly half as great as the first. Since the number of nuclei is reduced by half when the activity is reduced by half, the time interval between these two points (read from the horizontal axis) is the half-life of the element Record the half-life in data chart III.

11. The radioactive generator contains cesium-137, which decays to barium-137^m inside the generator. The barium is washed out by the solution and then decays into nonradioactive barium-137 by gamma emission with a half-life of 2.6 minutes Compare the half-life of your sample with that of the standard and compute the percentage error.

DATA

I. Background Activity

TRIAL	Background activity in laboratory (counts/min) CPM =	Time of day
1	25	2.10 PM
2	25	2.13 PM
3	26	2.15 PM
Avg	25	

II. Radioactive Decay

A Time Interval (min)	B Total count at end of interval	C Avg. activity in interval (counts/min)	D Avg activity less background (counts/min)
0-1	2068	2068	2043
1-2	3665	1597	1572
2-3	4849	1184	1159
3-4	5796	947	922
4-5	6542	746	721
5-6	7054	512	487
6-7	7514	460	435
7-8	7877	363	338
8-9	8128	261	226
9-10			

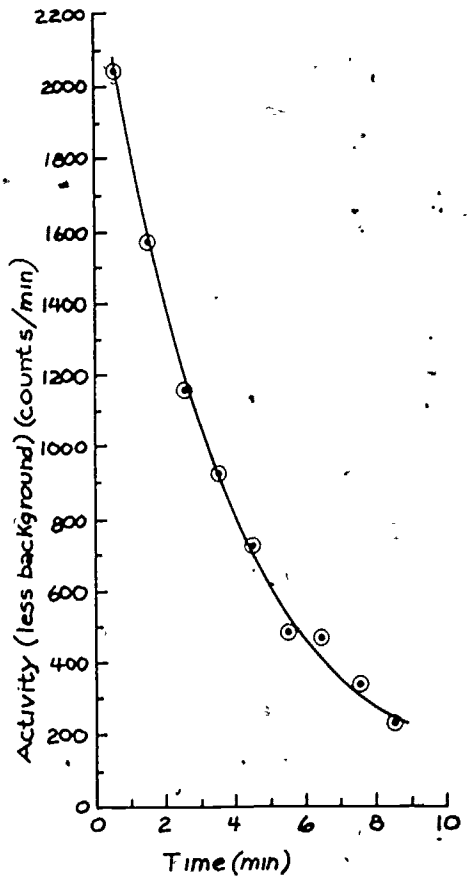

TRIAL	A Activity at 1st point (counts/min) C(1) =	B Time at 1st point (min) t(1) =	C Activity at 2nd point (counts/min) C(2) =	D Time at 2nd point (min) t(2) =	E Half-life (min) t(½)=	F % error E =
1	2000	0.6	1000	3.2	2.6	0%
2	1600	1.5	800	4.0	2.5	4%
3	1400	2.0	700	4.5	2.5	4%
4	1200	2.5	600	5.0	2.5	4%

RELATED QUESTIONS AND SUGGESTED ACTIVITIES

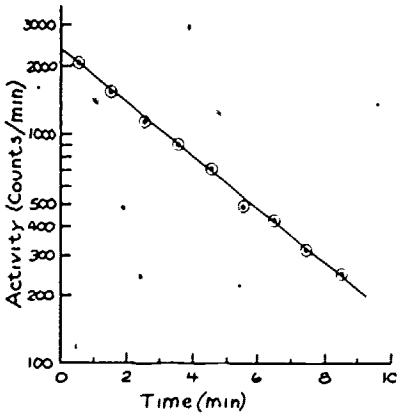

1. Plot the data of corrected activity in counts per minute vs. time on a sheet of semi-log paper, using the logarithmic scale for the activity. Draw the best straight line through your data points. Determine the half-life of barium-137^m from this graph and compare to the value you obtained from the graph you plotted on regular graph paper.

When activity is 2000 counts/min, time is 0.6 min; when activity is 1000 counts/min, time is 3.2 min, when activity is 500 counts/min, time is 5.8 min. Therefore half-life is 2.6 min.

2. If the sample that you obtained had an initial activity that was much greater than the samples given to others in the class, how would your half-life results compare with theirs?

It would have been the same.

3. Chemical reactions usually occur much faster when the temperature of the reagents is increased. What happens to the half-life of barium-137^m when the temperature of the sample is raised? Set up a controlled equipment and report your results.

No change in radioactive decay is observed as the temperature is raised.

4. Using the same technique, find the half-life of another radioactive element with a short half-life, such as indium-113^m.

The half-life of indium-113^m is 100 minutes.

5. Go to the library and find the significance of the letter *m* in the designations of the samples barium-137^m and indium-113^m.

The letter m stands for metastable. It denotes an excited state of an atom which persists for a relatively long time before decay.

APPENDIX 1 LABORATORY SAFETY PROCEDURES

Follow these directions. They are meant for *your* safety.

- Treat the apparatus with care. Accidents are likely to happen when there is fooling around or horseplay.
- Listen carefully to the teacher's directions before starting an experiment and stop work immediately upon the command of the teacher. Prompt compliance in this manner can save you from harm.
- Keep clothing and books in the places provided. If left on the lab tables they can be damaged and can also contribute to accidents by getting in the way.
- Never reach your hand over a Bunsen burner that is lit. Also, tie back any loose hair whenever a Bunsen burner is being used for one of your experiments or for experiments by a neighboring group. Caution your laboratory partners if they are careless near an open Bunsen burner.
- Anticipate the steam that will form whenever water boils, and provide a container to hold the hot water when the steam condenses. Also be careful not to touch containers, ringstands, or tripods immediately after heating. Tripod supports are especially dangerous in this respect because they rarely look hot.
- Keep hot materials and heavy objects away from the edge of the table. If apparatus must be placed near the edge of the table, be sure that it is clamped securely.
- If there are gas jets on your table, be sure that they are turned off when they are not being used. If there are any gas leaks, report this to your teacher immediately.
- If your table has electric outlets, refrain from probing them with metallic objects or even wet non-conductors. You can never tell when the outlets are on.
- Be sure that a teacher is present before you start work.
- Never carry laboratory equipment or apparatus through the halls during intervals when classes are passing.
- Familiarize yourself with the locations of the fire extinguishers, safety blankets, and master shut-off switches in the laboratory.
- Report at once to the teacher in charge if anything seems to be unusual or improper, such as broken, cracked, or jagged apparatus or faulty electric wiring.
- Whenever handling hot liquids, always wear safety glasses or a face shield.
- Never force glass tubing or a thermometer into a dry rubber stopper. Wet it with soapy water or glycerine and then push it in gently with a twisting motion. Always hold the glass tubing near the place where it enters the stopper. Wrapping the hand or tubing with cloth is a further safety precaution to avoid cuts if the glass should break.

- When handling Dry Ice or liquid air observe the same precautions as for hot liquids. Freezing can be as dangerous as burning.
- Glass wool or steel wool should be wrapped in cloth or your hands should be protected by gloves to avoid getting splinters in the skin.
- Wait a while after grasping an electrical device that has just been turned off. Many electrical devices become hot with use, and serious burns may result if they are grabbed too quickly.
- Never short-circuit storage batteries or dry cells. Wires become red hot in a very short time and can cause serious burns.
- Report any sharp edges on mirrors, prisms, or glass plates so your teacher can have them covered with tape or melted paraffin.
- When removing an electric plug from its socket, grasp the plug, not the wire.
- When inserting an electric plug in an outlet, hold the plug so that any flashback due to a short circuit in the apparatus will not burn the palm of your hand.
- When wiring an electric circuit, make the "live" connection the last act in assembling and the first act in disassembling.
- Avoid bringing both hands in contact with live sections of an electric circuit. Follow the practice of professional electricians who keep one hand in their pocket whenever manipulating circuits.
- When using electric circuits, cover any grounded appliances, gas jets, or plumbing on the laboratory table to avoid accidental grounds.
- During the charging of storage batteries, keep away from the fine spray which sometimes develops. It is harmful if inhaled or allowed to get on the skin.
- When operating devices which emit ultraviolet light, protect your eyes by wearing ordinary eyeglasses. Glass is opaque to these harmful radiations.
- Never experiment with x-ray tubes or machines in the physics laboratory or use them for home experimentation unless an experienced x-ray technician is available and the proper shielding devices are used.
- Remove thermometers and glass tubing from rubber stoppers immediately after use to prevent them from "freezing" to the stopper. To remove frozen glassware from stoppers, use a wet cork borer, just large enough to slip over the end of the tube. Slowly work the borer through the stopper until the frozen glass can be pulled out easily. Another technique is to slit the stopper with a single-edge razor, remove the glassware, and then repair the stopper with rubber cement.
- Do not attempt to try electron beam bending experiments with old fashioned Crookes or cathode discharge tubes that require high voltages for operation. Dangerous x rays are produced that are harmful within several feet of the apparatus.
- Never look directly into a laser or allow the beam to enter the eyes of others in the laboratory. Also be careful of accidental reflections of the laser beam by mirrors in the laboratory.
- Do not attempt to build a laser at home or in the laboratory unless an experienced and qualified laser expert is providing direct supervision. Carbon dioxide and Q-switched ruby lasers are especially dangerous in this respect.
- Do not experiment with rocket fuels for physics experiments.
- Never take a picture tube out of a television set for experimentation. The tube has been evacuated and a scratch or sharp rap can cause the tube to implode and shatter.

APPENDIX 2 • GOOD GRAPHING TECHNIQUES

A graph shows the relationship between two quantities. Usually, one of the two is thought of as independent and the other is thought of as dependent on the first. For example, suppose one quantity is the changing speed of an object and the other quantity is time. We would consider the speed dependent on time—the speed has different values at different times—and we would consider time independent. Of course, sometimes it is not so clear which quantity is the independent one, and you are free to choose as you start your graph.

The independent quantity is represented by a horizontal *axis*—a straight line with values marked on it—at the bottom of the graph. The dependent quantity is represented by a vertical axis at the left of the graph. When you are asked to make a graph of something vs. something, the quantity stated first is the dependent quantity and goes on the vertical axis; the quantity following "vs." is the independent quantity and goes on the horizontal axis. For example, on a graph of speed vs. time, speed is on the vertical axis and time is on the horizontal axis.

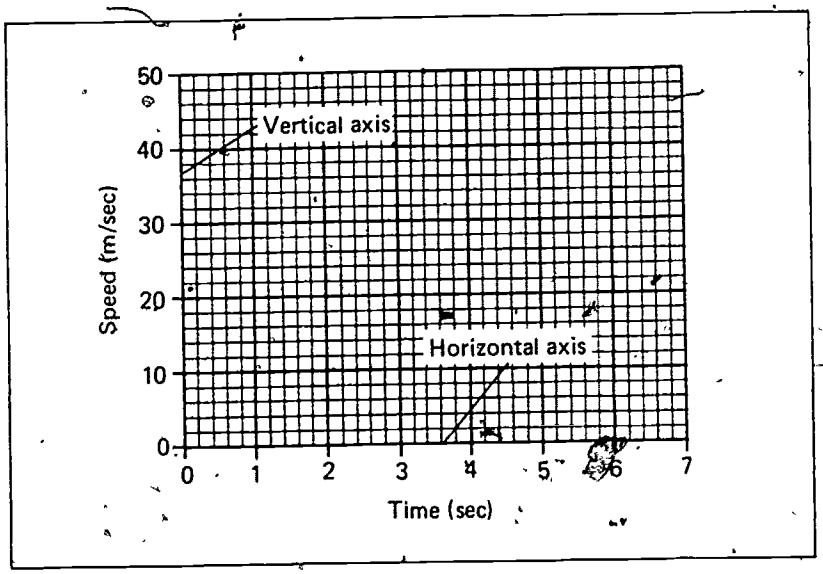

The following suggestions will make your graphs easier to construct and to read.

1. When marking a scale along the axis of a graph, make short lines perpendicular to the axis and labelled with numbers at appropriate points. You do not need to put a numerical value beside or under each mark if it will make the scale too crowded. You may choose to label only every other, or every five, or even every ten.

2. To make it easy to find positions along an axis scale between the marked positions, take advantage of the decimal system. Since the grid lines on the graph paper supplied with this manual are close together (five lines to a centimeter), put your markings every five or ten lines apart.

3. When trying to find a value between marked values, keep in mind how much each space stands for. For example, if there are marks for each 100 grams and the marks are 5 grid lines apart, each space stands for 20 grams. The position corresponding to 160 g would be on the third grid line after the 100-g mark.

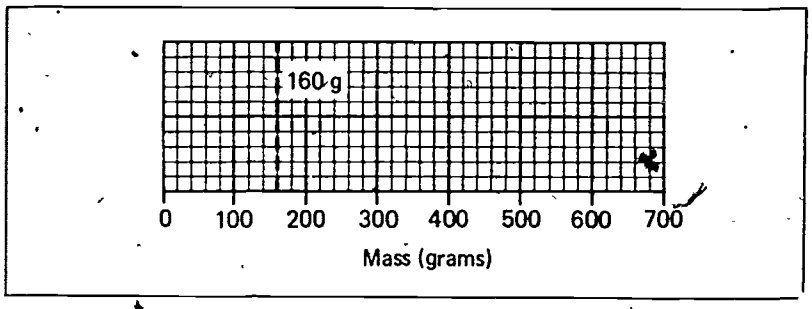

4. When plotting points on a graph, make dots that are big enough and dark enough to be seen clearly but small enough to mark a specific position on the graph. Often it helps to put a circle around the dot to make it stand out.

5. When graphing data points that appear to lie on a straight line, more or less, draw a single straight line that goes through as many points as possible. Unless there is some reason to question some of the data, there should be equal numbers of points slightly above the line and slightly below it. Never "connect the dots" unless specifically instructed to.

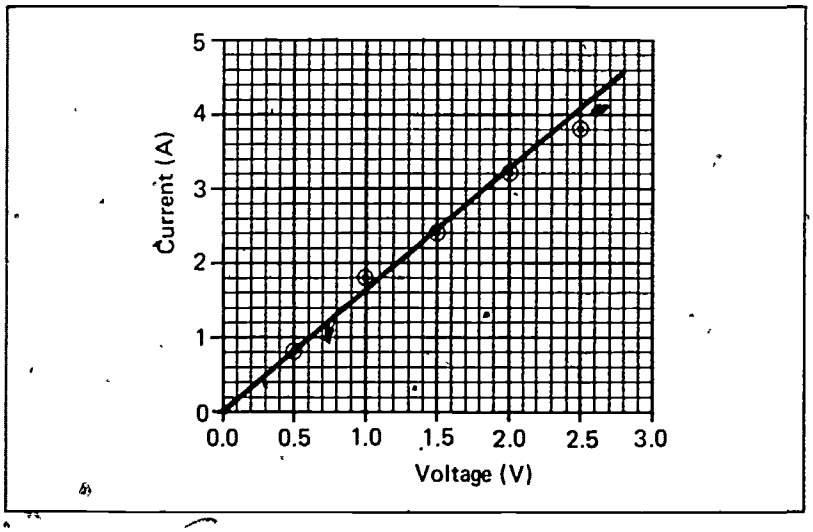

6. When graphing points that do not appear to lie on a straight line, draw a *smooth* curve that goes through as many points as possible. There should be equal numbers of points on either side of the curve.

7. Not all graph lines go through the (0,0) point (the origin). Ask yourself whether the dependent quantity really is zero when the independent quantity is zero. If you let go of a ball just as you start to clock it, the speed is zero at time zero. On the other hand, if the ball is already moving when you start to clock it, the speed on your graph should *not* be zero at time zero.

220

EXPRESSING MEASUREMENTS

If you are counting the number of magnets in a box, you will arrive at an exact answer—the same answer that anyone else would get unless one of you had made a mistake in counting. On the other hand, if you are measuring the volume of the box, you can only approximate the true volume. You might measure the sides and calculate the volume from the measurements. Or you might fill the box with sand and then measure the volume of the sand with a graduated cylinder. No matter what method you use, your measuring tools and techniques will limit your answer to an approximation.

It is very likely that several independent measurements of the volume of the box will give slightly differing results. There are several reasons: the sand may not be perfectly level in the graduated cylinder each time; some sand grains may remain inside the container when it is emptied; the sand may pack down or spread out as it is handled, so its volume may change. No matter how carefully you work, you are not likely to determine the volume exactly. In fact, even if you had obtained the result 461.7 ml on each of three trials, you would still know the volume to only a tenth of a milliliter—with the same graduated cylinder there would be no way you could tell whether the volume was exactly 461.700000...ml or whether it was 461.6821...ml or just what it was.

Scientific measurements should be written down in a way that makes clear the amount of certainty in the measurement. Suppose that the results of three trials of measuring the volume of the box gave 461.7 ml, 461.9 ml, and 461.8 ml. The best value for the volume would be the average of three, or 461.8 ml. Note that this value has three reasonably certain digits—4, 6, and 1—and one rather uncertain digit—8. Someone reading your value would know that, as far as you could tell, the volume was close to 461.8—it could well be a few tenths of a milliliter higher or lower. In general, the results of a measurement should be written with as many digits as are certain, plus one more that is uncertain. When a measurement is written according to this convention, all the certain digits plus the one uncertain digit are called **significant figures**. It may be necessary to add additional zeroes to put the decimal point in the right position, but this does not alter the number of significant figures (see Counting Significant Figures in following discussion).

If you needed to measure the volume more precisely—that is, to more decimal places—you would need different measuring tools or perhaps even a different technique. A value for the volume would be

truly more precise only if it had just one uncertain digit in it. For example, suppose three measuring trials gave results of 461.82 ml, 461.84 ml, and 461.80 ml. Then you would be justified in giving the value 461.82 ml as the volume to two decimal places. But if the three trials gave 461.82 ml, 461.95 ml, and 461.69 ml, there would be uncertainty in both digits to the right of the decimal point. Even though the average of these three values is 461.82 ml, your data do not justify five significant figures; you would have to give the value as 461.8 ml, which is no more precise than the previous value.

COUNTING SIGNIFICANT FIGURES

The rules for counting significant figures are straightforward.

1. All non-zero digits are significant regardless of the position of the decimal point. Each of the following measurements has five significant figures.

564.32 grams 87.593 meters 4531.6 cubic centimeters

2. All zeroes between two significant figures are significant. Each of the following measurements has four significant figures.

7.051 meters 80.05 grams 100.6 miles

3. When there is no decimal point, zeroes at the end of a number are not significant figures. The measurement 42,600 meters has three significant figures (the 4, 2, and 6).

4. If the zero at the end of a number with no decimal point is really the result of a measurement and is meant to be a significant figure, it is often written with a dash above it.

Measurement	Number of significant figures
60,000 grams	1
60,000 grams	2
60,000 grams	3
60,000 grams	4
60,000 grams	5

5. When there is a decimal point, zeroes at the end of a number, to the right of the decimal point, are significant figures. The measurement 42.600 meters has five significant figures.

6. Zeroes at the beginning of a number are never significant figures. The following measurements all have three significant figures.

0.318 centimeter 0.0000318 meter 0.0300 meter

WORKING WITH SIGNIFICANT FIGURES

When you add, subtract, multiply, or divide with significant figures you must take care that your result does not have more than one uncertain digit. In multiplication and division, the result can have no

more significant figures than the measurement with the fewest significant figures in the original data. For example, when 3.112 m is multiplied by 2.2 m, the product 6.8464 m^2 should be rounded off to 6.8 m^2 to avoid more than one uncertain digit. In addition and subtraction, the result can have no more decimal places than the measurement with the fewest decimal places in the original data. For example, when 96.3 g is added to 8.149 g, the result 104.449 g should be rounded off to 104.4 g.

Most scientific hand calculators are capable of computing to eight or more significant digits. However, it is incorrect to express the results of any experiment to eight significant figures when most of our measurements have three or less. Giving results with too many significant figures falsely implies that the experiment was carried out with a much greater precision than the procedures and data can provide. In general, the final results of any experiment should never have more significant figures than the worst of the data that was recorded.