DOCUMENT RESUME

ED 197 211 CE 027 895

AUTHOR Rice, Eric; And Others
TITLE Access to Vocational Education. A Planning System for Local Secondary and Post-Secondary Program and Facility Accessibility. Step 1: Identifying Barriers.
INSTITUTION Barrier Free Environments, Inc., Raleigh, N.C.; System Sciences, Inc., Chapel Hill, N.C.
SPONS AGENCY Office of Vocational and Adult Education (ED), Washington, D.C.
PUB DATE [80]
CONTRACT 300-78-0592
NOTE 139p.; Photographs, small print in illustrations, and green headings will not reproduce well. For related documents see CE 027 894-901.

EDRS PRICE MF01/PC06 Plus Postage.
DESCRIPTORS *Accessibility (for Disabled); *Access to Education; Administrator Guides; Building Design; Buildings; Disabilities; *Educational Facilities; Educational Planning; Equal Education; Evaluation Methods; Guidelines; *Needs Assessment; Physical Mobility; Postsecondary Education; Programed Instructional Materials; Questionnaires; Secondary Education; *Structural Elements (Construction); *Surveys; Systems Approach; *Vocational Education

ABSTRACT

This guidebook focuses on the first of five steps included in a planning system for improving local secondary and postsecondary program and facilities accessibility: identifying barriers. The first five sections of the booklet are comprised of self-instructional descriptions of five needs-assessment procedures that can be used to identify barriers: (1) surveys and questionnaires, (2) nominal group technique, (3) Delphi technique, (4) outside experts, and (5) community impressions. Section 6 provides seven sample surveys which have been demonstrated to be valid and reliable instruments for identifying and assessing barriers to vocational education programs and facilities. The final portion comprises the bulk of the guidebook and contains an architectural accessibility survey. There are six sections in the survey, each covering different parts of the site and building: site, entrances, vertical circulation, building products, functional spaces, and special services. In addition to these six sections, two modules are included for separate surveys which may apply to any or all of the six sections; these two modules focus on accessibility routes and doors. (LRA)

# Access to Vocational Education

## A Planning System for Local Secondary and Post-Secondary Program and Facility Accessibility

# Step 1

# Identifying Barriers

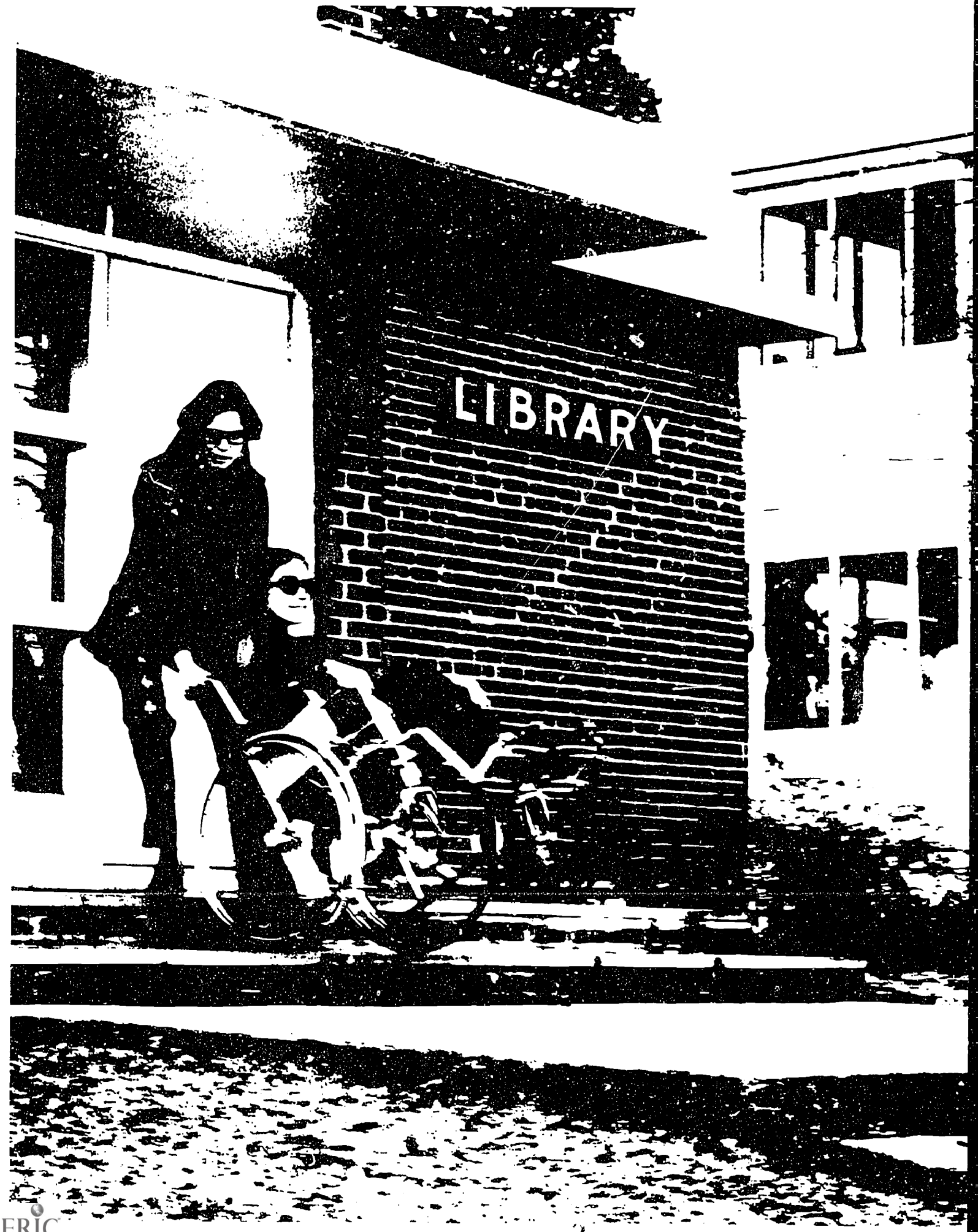
LIBRARY

# Step 1: Identifying Barriers

Surveys and Questionnaires, 5
Nominal Group Technique, 17
Delphi Technique, 27
Outside Experts, 39
Community Impressions, 49
Sample Surveys, 58
Architectural Accessibility Survey, 81

# Suggested Techniques for Assessing Need


TB

# Introduction

The first step in the Planning System is identifying and specifying barriers. A critical step in future program development, barrier identification requires systematically collecting valid and reliable information about the current status of your program in terms of accessibility. The care you exercise in collecting valid and useful information will pay dividends as you complete other steps in the Planning System and ultimately render your program accessible.

# How to Use This Booklet

The basic question is, "What techniques or procedures are available to local administrators to collect data about barriers to accessibility?" Before opening this booklet, *Identifying Barriers,* you have recorded on the Planning Record the names of the two procedures you believe to be most useful in your setting for identifying barriers. In this booklet, you will find self-instructional descriptions of each procedure suggested for use in Step 1. Please turn to the sections corresponding to the procedures you noted in the Planning Record and read the material. Note that the materials assume you will be directing the planning exercise. If you have given responsibility for this step to someone else, this booklet should be studied by that person. After you have completed the reading, you must consider again your choice of procedures and make a final decision about which technique you will use.


MICON
POWER ON
SHIFT
CLEAR
SHIFT
BACK SPACE

# Surveys and Questionnaires

Surveys and questionnaires are part of the fabric of modern American life. Between birth and death, almost everyone completes questionnaires and reads the results of many surveys; large numbers of people are involved in composing and administering them. Questionnaires occupy the entire professional life of many social scientists; research literature abounds with directions on construction and discussions of theoretical issues of questionnaire development. Time has witnessed the replacement of the personal interview with the self-administered questionnaire and this, in turn, with the telephone survey.

There are many different kinds of of Surveys. The types may be differentiated in terms of the following dimensions. The purpose of a questionnaire or Survey may be *descriptive,* to gather information about a subject or condition, or *analytic,* to ascertain the relationship between beliefs or attitudes and practices or other conditions. One may wish to *sample* the whole general population or some special section of it. Information from the whole population or some random or stratified sample may be needed.

---

How could the Survey method be used in planning vocational education for handicapped students?

Name some aspects of the problem which need to be *described.*

_____

_____

Are attitudes important to consider in making these plans? Whose attitudes need to me measured?

_____

_____

Who needs to fill out these questionnaires?

_____

Is the information needed from a whole population or will some sample suffice? Why?

_____

In considering the use of a questionnaire or Survey instrument, the issues of reliability and validity must figure prominently in deciding whether or not to use this technique. Reliability refers to consistency, to the chance of getting the same results by administering the questionnaire again. Validity covers all the problems associated with whether a questionnaire really measures what it is intended to measure. To check the reliability of factual questions, the same question, worded differently, is repeated in the questionnaire. To ascertain the validity of factual questions, a second independent source of information is required (though not often available). Census figures, another informant, or follow-up personal interviews after mailed questionnaires are some of the comparison materials available for determining construct validity.

With attitude questions the issues of reliability and validity are even more crucial. Reliability is established by asking several versions of the same question and measuring the degree of agreement among them. The lack of external criteria is the chief problem in assessing the validity of attitude questions. The usual way to establish the validity of an attitude measure is construct validity obtained by computing the correlation of one set of questions with some other measure of the same attitude or another underlying attitudinal value such as authoritarianism.

The ideas of reliability and validity are important concepts to understand and remember. Try to define them and then check your definitions.

Reliability is _____

_____

Validity is _____

_____

Answer:
Reliability measures consistency, the probability of obtaining the same results at another time or with a different group of people. Validity is an estimate of the degree to which the questions measure what they were intended to measure.

Having considered several of the chief characteristics and two of the problems of Surveys and questionnaires, the needs of the present study should be mentioned in order to focus the remaining discussion on a particular kind of questionnaire which might best serve those needs. A questionnaire or Survey format would be appropriate for collectiong descriptive informaton about the potential handicapped student population to be served by the vocational program of each education system. This information could be gathered from the sub-population of directors of special education, vocational education, or vocational rehabilitation.

Questionnaires also could be used to measure the attitudes of vocational teachers toward handicapped students, since teachers' attitudes have been identified as one of the barriers inhibiting vocational education for handicapped students. A mailed, self-administered questionnaire (anonymous for teachers) would be the most appropriate format for collecting either kind of information. Mailed questionnaires, though imperfect, also represent the best compromise between the complete, ideal information desired and the practical considerations of available resources.

Telephone Surveys have become increasingly popular as the costs associated with personal interviews and mailed questionnaires have soared. The main difficulty with this new method is obtaining a representative sample which is tricky since telephone books omit some people at their request and some who lack phones. The requirement of a sophisticated sampling design usually mitigates against the use of telephone Surveys by local school systems.

For what purposes could a Survey be used in planning vocational education for handicapped students?

Answer:
To gather descriptive information and to measure attitudes.

By means of a circulated questionnaire a greater amount and more accurate information may be obtained for a smaller investment of time and money than from almost any other information-gathering technique. If the true opinions and feelings of a particular group of people such as teachers of vocational education are needed, then their individual reports are more desirable than a supervisor's best estimate of them. If the needs of the local handicapped population are to be known, some form of Survey must be employed, for incidence varies geographically. The questionnaire can elicit both kinds of information accurately, provided the proper planning steps are followed in developing it. If questionnaire planners can reasonably assume that the population they are sampling is literate, the results of the Survey should be fairly valid and reliable.

## STRENGTHS AND LIMITATIONS OF SURVEYS

The main advantage to mailed questionnaires, though there are many others, is the cost. Large amounts of information may be gathered from many people; the method costs much less than personal interviewing and is much more anonymous than an interview. More people can be reached via the mail; geography can be transcended. An advantage to the respondents is the ease of response since they can finish at their own rate. Mailed questionnaires are subject to less bias than personal interviews because interviewers differ and may unconsciously communicate their own feelings about the questions; everyone gets the same presentation in a mailed Survey. The method is quite familiar to most potential respondents and can be easy to tabulate if arranged properly in the first place.

Questionnaires also present some problems. Their reliability and validity are difficult to establish, though they are probably as high as most indirect methods. Mailed-out questionnaires can be given only to people who can read, though the questionnaire may be written at a very low reading level. The questionnaire results also are limited to the group of people who choose to respond to it; most authorities suggest that a response rate of 90% is desirable and at least 60% is necessary to obtain representative findings. And though some people like the anonymity of the technique, others find it too impersonal. If the questionnaire is poorly constructed, ill-worded, and not fit to specific objectives, the results may be an inaccurate representation of respondents' true thoughts and feelings. If the questions are worded to express some bias, the results will also reflect bias. One final problem is that of item interdependence—the respondent can consider the questionnaire as a whole and seek consistency in his answers rather than answer each question spontaneously.

Which of the following are advantages of the questionnaire over other techniques for identifying barriers?

a. inexpensive
b. maximizes individual expression
c. less subject to personal bias
d. maximizes the influence of those who can read
e. people can answer at their own speed

Answer:
a., c. and e.

Questionnaires or Surveys have some inherent problems. How might these best be overcome?

a. obtain a response rate of over 50%
b. only give the questionnaire to people who can read
c. have it administered orally by a personal interviewer
d. avoid repetition among items so that the respondent cannot check his answers
e. with the objectives clearly in mind, construct the instrument very carefully

Answer: e.

## WHEN SHOULD THE SURVEY TECHNIQUE BE USED?

Surveys should be used when particular information is needed that is not available from any other source. This is frequently the case with local problems, though it is not often used in such a situation. Questionnaires are means of information gathering; in the present study they can be used to provide necessary and valuable background information for a problem-solving group. Needs assessment questionnaires from studies of vocational education for the handicapped by state education agencies may well be appropriated because of the cost involved in developing questionnaires.

Different techniques are best for accomplishing different objectives. In which of the following situations would a questionnaire be most helpful?

a. generating consensus in a group
b. gathering information
c. reaching the disadvantaged
d. forming opinions
e. weighing different objectives

Answer: b.

In planning vocational education for handicapped students, what problems would be addressed using a Survey?

a. _____

_____

b. _____

_____

Answer: getting information unavailable elsewhere; counting students; measuring attitudes; getting anonymous opinions.

## RESOURCES AND MATERIALS REQUIRED

The physical requirements of using the Survey are few. A small quantity of paper and pencils may be easily obtained along with a typist in most school systems. Unless the questionnaire is to be sent to hundreds of people and, therefore, requires computer analysis to determine its reliability and validity, the materials needed to gather information about barriers by means of a questionnaire are minimal.

The materials required to develop a questionnaire are quite small, but the costs in terms of personnel may be very high. Development of a good questionnaire takes time, usually taken primarily from one person but also involving other staff members who may be drawn into the process to make initial suggestions or to evaluate the product. A small group of staff members must fill out the questionnaire in order to critique it. The actual administration of the instrument would involve a fairly large group of teachers, administrators and parents.

---

How would you evaluate the cost of using a Survey in your unit compared with some of the other techniques available?

| | Low | Average | High |
|---|---|---|---|
| Materials and Equipment: | | | |
| Personnel: | | | |

Considering the costs, do you think you might consider this technique further? Yes; No.

Comments:
Probably low on equipment and above average on personnel. If "no" was your answer, please read the next page which discusses ready-made questionnaires.

---

Having been advised of the advantages and limitations of using the Survey to identify barriers and the costs involved in developing a questionnaire, it is time to consider a second question; whether to use a questionnaire someone else already has developed or to compose one of your own. Adopting a ready-made questionnaire saves time and effort but sacrifices a perfect fit with the local situation and local people. However, ready-made questionnaires may be supplemented with additional items supplied by the adopters to overcome this difficulty.

In the last section of this document, you will find several questionnaires addressing different kinds of barriers to vocational education for handicapped students. These materials have been gathered from the literature on assessing barriers and represent the best items and questions in the field which have been tested and refined to date. Some parts of the instruments which follow may be appropriate to your situation; others, may not. Feel free to use any part of the materials that suit you and to modify them as necessary. You must modify or adapt the materials for your setting in order to improve the validity of the Survey by tailoring to specific local conditions. The remainder of this discussion is addressed to the techniques of questionnaire development, should a completely original or local supplement to the questionnaires provided in the Appendix be desired.

# HOW TO IMPLEMENT THE SURVEY TECHNIQUE

The activities necessary to develop a questionnaire include: (1) develop clear and specifically defined objectives that state exactly what results are desired or expected; (2) define the population and decide whether to sample it fully or partially; (3) consider timing, costs and staffing needs; (4) frame and arrange questions; (5) pilot test the instrument to identify errors and problems; revise the instrument as necessary; (6) administer the questionnaire; and (7) analyze and document the responses. Several of these activities are discussed in greater detail below.

**Activity 1: Develop Objectives.** Very often, well-intentioned Survey writers jump to question writing only to discover from disagreements among themselves and from problems with question wording that they are not at all clear about what purpose their questions are to serve. For example, the question, "How many magazines have you read this week?" is confusing: Does "read" mean "subscribe" or "borrow"? "Read" the whole magazine or one article or glance at? First, asking the reporter's questions of who-what-when-where-why-how (much) helps identify the objectives of a particular questionnaire and simplifies the steps which follow.

Why is it important to state clearly the objectives of the questionnaire?

_____

_____

How can this be accomplished?

_____

_____

Answer:
to clarify meanings; by asking "who-what-when-where-why-how (much)."

Arrange the logical steps involved in questionnaire development in chronological order.

a. analyze response
b. sample design
c. state objectives
d. administer questionnaire
e. pilot test
f. timing & staffing
g. write questions

Order:
7, 2, 1, 6, 5, 3, 4

**Activity 2: Define the Population** and **Activity 3: Consider Timing, Costs and Staffing.** The next two steps in Survey development are also preliminary to actual question writing. What people can best answer the questions that need answers? Is it necessary to have all of them respond or will a sample suffice? Should the sample be random or should some specific part of each group in the population be tapped? Also at this point, a timetable of the questionnaire development procedure must be laid out, the staffing needs identified, and the costs estimated. It is much easier to modify an activity in the planning stages than to change it later on, particularly a procedure which has logically sequential steps.

**Activity 4: Frame and Arrange Questions.** How long should a questionnaire be? The debate rages long and hot. Many authorities recommend a 10-page maximum, even for a well laid-out Survey which includes a great amount of white space. The best recommendation is "as long as it has to be but no longer than it should be." By first specifying objectives and then writing only items that cover those objectives you should eliminate many of the irrelevant questions. Keeping a particular length in mind encourages parsimonious item writing.

Suppose you decide that you need to measure the attitudes of vocational teachers toward handicapped students, but there are over 100 teachers. How do you decide which ones to have fill out the questionnaire?

_____

_____

Answer:
You want to sample the whole group and you choose teachers at random.

How long should a questionnaire be?

a. 10 pages
b. 1 page, front and back
c. no more than 3 pages
d. no longer than necessary
e. depends on how many people will be taking it

Answer: d.

Questionnaire items can assume a variety of forms including open-ended, short answer or fill-in-the-blank, multiple choice, rating scales, rank-order, checklists and grid matchings. Some kinds of information are best obtained by one technique; others, by other techniques. A varied format enhances all but the very briefest questionnaire. In the needs assessment study under present consideration, a checklist or inventory format would be most appropriate for gathering information about present vocational programs and about the handicapped population. Rating scales and multiple choice items would be suitable for measuring teachers' attitudes toward handicapped students.

What kind of question format would be best for identifying physical barriers that exist in schools:

a. multiple choice
b. fill-in-the-blank
c. checklists
d. rating scales
e. rank-order
f. open-ended

Answer: c.

Writing the questions is the most crucial part of questionnaire development. Gardner's (1976) two suggestions cover a multitude of question-writing rules listed by other authorities: (1) make sure that you can be understood in the only way you intended, and (2) eliminate bias by avoiding questions that push answers in one direction or another. This means shunning questions which presuppose a certain state of affairs. The language used should be familiar and appropriate to the population—"educational jargon" would be permissible in a questionnaire for teachers.

A distinction is made between "open" and "closed" questions. "Open" questions require respondents to reply in their own words on a number of blank lines provided them; with "closed" questions the respondents simply choose the one answer from those provided which most closely approximates how they feel. The freedom, spontaneity, and richness of open questions is lost or reduced in closed questions, but open questions are difficult to answer and analyze. Closed questions can approximate the richness of open-ended questions when carefully constructed.

If a succession of sets of open and closed questions is used, each set dealing with a different objective and being somewhat interdependent, the "funnel approach" may be considered. With this technique question writers begin with a very broad general question and progressively narrow down the scope of the question until arriving at some very specific points. "Filter questions" are those in the sequence which exclude some respondents to whom the narrowing topic becomes irrelevant. The funnel approach is appropriate when complex problems need to be defined in terms of observable behavior or conditions, as in the present study.

Writing good survey items is difficult. Two basic principles of composition are mentioned in this text. List one of them.

_____

_____

Answer:
(1) avoid bias by avoiding phrases which presuppose a certain state of affairs, or
(2) make sure you can be understood only the way you wish to be.

What is the difference between open and closed questions?

_____

_____

Answer:
"Open" questions allow respondents to answer in their own words; "closed" questions require that respondents choose from among several given answers.

What is the "funnel approach" in question writing?

a. series of questions, the first broad and those following more and more specific
b. several questions in a row, beginning with particular points and then moving to more general issues
c. set of questions, each of which is followed by the same "filter" question
d. a "tornado" of ideas, in question form, which the respondent must consider simultaneously and choose the best

Answer:
a.

Some more specific rules to observe are as follows. Make sure respondents are capable of answering the question—they reasonably should have the information sought and not be tempted to guess. Be sure respondents realize whether fact or opinion is required; ask for one piece of information per question. Avoid vague words such as "school population" and general adjectives and adverbs such as "usually." Other item-writing problems are words with double meanings or emotional overtones, double negatives, abbreviations, hypothetical questions, and the "If yes, then. . . " format. Open-ended questions are suitable if "general" information is desired.

---

See if you can distinguish between good and poor items. Which of the following would be the best way to ask teachers about their attitude toward handicapped students?

a. If you had to have handicapped students, would you accept them?

b. How do you think other teachers feel about this issue?

c. Handicapped students are no different from other students.

| Strongly Disagree | Mildly Disagree | Neutral | Mildly Agree | Strongly Agree |
|---|---|---|---|---|
| ● | ● | ● | ● | ● |

d. Most teachers feel as I do about having handicapped students.

_____ True _____ False

e. How do you feel about having handicapped students and how will you cope with them?

Answer: c.

---

Response options for questionnaires also should be carefully considered. There should be categories for all possible answers, and all categories should be mutually exclusive and independent. One option that always should be available is "don't know." For response scales which range from "strongly disagree" to "strongly agree," it is important to label the midpoint carefully and to balance the ends of the scale out from the neutral position. Berdie (1974) advises arranging responses vertically to avoid confusion caused by blanks before and after a response. The acquiescent response set may be avoided by alternately having "agree" and "disagree" mean satisfaction, in random order.

---

No matter what form the response options to questions assume, the person filling in the questionnaire should always have the option,

" _____ ."

Answer: don't know.

---

Once the questions have been written, careful attention to the format is important. The front of the questionnaire should be appealing, inviting participation. A title should be on the front along with the name and address of the person or organization issuing it; do not call it a questionnaire. A running title and page number should appear on each page. Items should be grouped logically into short sections, each section having its own brief, clear instructions.

As to the order of content, instructions for the whole questionnaire should be at the very beginning. The first items should be non-threatening to avoid prompting respondents to toss the whole questionnaire. Important questions should come near the beginning or in the middle so that respondents are not fatigued when they reach them; sensitive demographic questions such as age and income should be placed at the end. If a computer is used for data analysis, it is helpful if response spaces are arranged down the right-hand edge of the page and numbered according to the column of the computer card in which they are to be stored.

Questions should contain two different kinds of instructions. What are they?

_____

_____

Answer: General instructions at the beginning and specific instructions for answering the items in each section.

Where should personal questions such as "age" and "income" be placed in questionnaire?

a. first thing
b. buried in the middle
c. should never be asked at all
d. at the end
e. don't know

Answer: d.

**Activity 5: Pilot Test the Instrument.** All writers of books on questionnaire techniques emphasize individual will respond to the Survey The chief function of administering the first version of a questionnaire to a representative sample of people is to check for ambiguous words and phrases. Different sections of the questionnaire may be circulated separately to hasten the analysis. Pilot testing allows a developer to check time allowances, item difficulty, response rate, sample adequacy, item variability (if that is appropriate), and the characteristics of non-respondents. The suitability of the method even may be questioned if piloting indicates another technique is more fitting. Instructions and opening comments may be clarified, time and costs estimated, and the efficiency of the data collection operation evaluated.

Why should a questionnaire be pilot-tested?

a. check for ambiguous words and phrases
b. establish time estimates
c. make sure instructions are clear
d. find out who will not respond to it
e. all of the above

Answer: e.

**Activity 6: Administer the Questionnaire.** The manner in which the questionnaire is presented to the respondent influences whether an individual will respond to the survey and how accurate their responses will be. To increase response rates, sponsors are encouraged to send out a letter prior to the questionnaire introducing the sponsor and their credentials, assuring confidentiality, and offering a re'sume' of the results. The letter which accompanies the quesionnaire itself should summarize the earlier letter and mention the deadline for returning the questionnaire. A follow-up letter after the questionnaire has been sent and before it is received by the sponsor often hastens replies. The use of reinforcers—pencils, colored paper, pictures or cartoons, and computer answer sheets—are futher items to consider.

Questionnaire sponsorship is another option. A letter of endorsement which accompanies the questionnaire (from the superintendent of schools if the questionnaire is for teachers for example) assures respondents of its authenticity. Hopefully, the letter would *not* also suggest that they must respond in a particular way, "giving the old school line."

Name two ways of increasing the return rate on questionnaires.

1. _____

2. _____

Correct answers include:
(1) introductory letter,
(2) sponsorship or endorsement,
(3) assurance of confidentiality,
(4) followup letter, and
(5) little rewards such as a pencil.

## OTHER REFERENCES ON QUESTIONNAIRES AND SURVEYS

The books and articles on questionnaire and Survey techniques are numerous. Guilford, Campbell, Nunnally, and Ferguson wrote some of the most complete guides during the late 1950's. Oppenheim provides brief and "digestible" coverage of the problems of questionnaire usage in *Questionnaire Design and Attitude Measure*. Berdie and Anderson's *Questionnaires: Design and Use* (1974) is filled with many practical suggestions. Likewise Duckworth's *Construction of Questionnaires* (1973) is worthwhile reading.

# Nominal Group Technique

The Nominal Group Technique was developed by Andre Delbecq and his colleagues over a ten-year period; its purpose is to increase the effectiveness of group idea generation for program planning. It has been used successfully in industry, government, health and education organizations. Delbecq's technique minimizes the limitations of "natural" interacting groups which had been found less than adequate for generating ideas and setting priorities.

The Nominal Group Technique (NGT) has been designed specifically to assure equal participation of all persons involved in any aspect of the planning process so that the dialogue is not dominated by a few assertive individuals. For this reason, NGT is an appropriate technique to use when people with diverse backgrounds and different degrees of responsibility need to make decisions or solve problems. In fact, the NGT has been found helpful to school administrators when they must involve professional staff, support personnel, and parent groups in program planning (Paul, Turnbull and Cruickshank, 1977).

Essentially, the NGT is a structured group meeting in which individuals are encouraged first to generate their own ideas about problems, without the pressure from other participants toward consensus. Then, through a process of alternate discussion and anonymous voting, a rank-ordered list of problems or solutions is obtained. The technique is applicable to a great variety of tasks in many different settings.

---

What is one major difference between Nominal Group Technique and other group methods you read about in the Guide?

a. ideas are prioritized or rank-ordered
b. participants do not discuss each other's ideas
d. uniqueness of ideas is emphasized
d. NGT requires the use of a computer
e. it costs absolutely nothing

# STRENGTHS AND LIMITATIONS OF THE NOMINAL GROUP TECHNIQUE

The Nominal Group Technique incorporates some advantages of interacting groups while minimizing most disadvantages. For example, one disadvantage of interacting groups is that natural leaders or verbal individuals dominate discussions, thereby discouraging new and innovative thinking about a topic. Interacting groups expend energy competing for "floor time", and discussion has a tendency to stray from the main topic. As a result, too often time is wasted and the decisions are sometimes made in haste, if made at all.

The structured steps of the NGT eliminate the problem mentioned above. The initial silent period encourages group memebers to generate ideas as well as to feel responsible for the group's success. The NGT also allows members to share personal concerns and potentially unpopular ideas while avoiding the sometimes "hidden agenda" of interacting groups. The discussion period following the "round robin" guarantees that meanings are clarified and ideas sharpened, as in interacting groups. The research of Delbecq and others indicates that nominal groups produce more creative and acceptable solutions than interacting groups (Dunnette, Campbell and Justad, 1963) when group members are varied in status, views or opinions, because NGT procedures reduce the amount of conflict and tension sometimes found in groups with varied backgrounds.

Although the Nominal Group Technique has many advantages, there are several aspects of the process which may limit its use under certain circumstances. First, the structured format demands a single-topic meeting since it is difficult to change topics in the middle of discussion. If after some discussion, it becomes apparent that more than one kind of problem or goal needs attention, then the NGT should not be employed. You should consider and eliminate this problem in your initial selection and phrasing of the question and objectives of the meeting.

A second potential limitation of NGT is its structured format. Though the structure "protects" members from others' criticism of their ideas, it occasionally makes some participants feel manipulated and uncomfortable, as if the process has precedent over the participants. Genuinely creative ideas and the enriching development of ideas through in-depth group discussion may be sacrificed by the need to move on to the next step in the procedure.

The technique also lacks a certain degree of precision. The ideas offered during the first round of the NGT may not be precisely defined and may appear to overlap, when in fact their sponsors had different aspects of the problem in mind. There is limited opportunity in the procedure for major refinement of ideas. Also, very similar ideas are not always combined before being ranked. Voting without a thorough sorting of ideas into appropriate categories is erroneous and results in repetition in the final list.

The Nominal Group Technique produces a rank-ordered list of possible barriers or problems. Is this a strength or limitation of the technique? Why?

Answer

Strength: Increases the validity of the technique, because it reduces the issue of personal

## WHEN SHOULD THE NGT BE USED?

The Nominal Group Technique is adaptable to a wide variety of settings and is well within the capacities of most potential participants. This method is appropriate when problem identification or idea-generation is desired. With it the following goals can be accomplished: (1) to identify various problems or elements of a problem; (2) to identify elements of a solution; and (3) to establish a priority listing of these elements. It is particulary helpful when judgments of many individuals must be combined and a group decision is made; it is very useful when a ranking of options is desired.

## RESOURCES AND MATERIALS REQUIRED

The physical requirements for holding an NGT meeting are minimal. A room large enough to accommodate all participants comfortably at desks or at a table with chairs is necessary. All participants need paper, pen or pencils and several 3" x 5" notecards for recording ideas and voting. The person leading or directing the group needs a flip chart on an easel or a chalkboard which the entire group can see for recording ideas and votes. The leader also needs a felt-tip pen and a roll of masking tape for recording and displaying responses. These supplies are not difficult to obtain in most educational settings.

---

In which of the following situations would the Nominal Group Technique be an appropriate technique for an administrator to use? Please select more than one answer if more than one situation applies.

a. negotiating with a teachers' union
b. planning for competency testing
c. selecting textbooks for the next year
d. fixing the air conditioning system
e. choosing the site of an open classroom unit
f. eliminating bus routes to conserve gas

---

How much would it cost to use the NGT to generate solutions for removing barriers in your educational unit? In general, the dollar expenditure would be minimal, because the materials are inexpensive and very little is required of the participants or the administrator as compared with other available methods. Good planning and careful definition of the group's objectives by the administrator or group leader will contribute to lower costs for this technique.

Let's see how much a nominal group session would cost your educational unit. Assuming the room, paper and pens were available, estimate the following:

| Participants | Cost of ½ day work (at most) |
|---|---|
| _____ | $ _____ |
| _____ | $ _____ |
| _____ | $ _____ |
| _____ | $ _____ |
| **Leader** | **Cost of 1½ day work** |
| _____ | $ _____ |
| | Total Cost $ _____ |

At this point, does the Nominal Group Technique still seem promising for your own school system? If "yes", continue; if "no", try another technique.

## HOW TO CONDUCT A NOMINAL GROUP TECHNIQUE SESSION

The Nominal Group Technique is a structured group meeting which follows a prescribed sequence of problem-solving steps. It is designed for a small group of seven to nine members whose goal is to generate a variety of quality ideas about a topic.* A larger group must be divided into smaller groups of this size. To complete all NGT steps, each group meets continuously for a maximum of three hours.

Participants should include both service providers and consumers. In the present context, this would include vocational educators, special education instructors, vocational rehabilitation counselors, program administrators and handicapped persons. It is important to include persons with different perspectives in order to obtain a wide spectrum of barriers and to provide realistic feedback on the ideas offered. You should consider using your Local Planning Committee.

Prior to scheduling the nominal group meeting you, as group leader, must clarify the objectives for the meeting through consultation with other administrators (and with group leaders if more than one group is involved). Specifically, the NGT question and alternative forms of the question should be developed to which participants can respond. Questions should encourage the expression of individual perspectives on the issue.

A sample question for identifying barriers might read as follows:

> What are the major problems or barriers of the Euphrates Community College in providing vocational education to handicapped students?

* The technique can be used effectively with up to 12 people once the group leader is familiar with the technique.

Here are a few quick questions about the NGT procedures so far. Fill in the blanks.

a. Who can be a member of an NGT group?

_____

b. What is the optimal number of people in an NGT group? _____

c. What is the first task which the administrator or group leader must perform?

_____

_____

Answers:
a. providers and consumers of services;
b. 7-9; c. phrase the question.

You, as group leader, should prepare an opening statement to begin the meeting which conveys a sense of the importance of the task, clarifies each member's role in the meeting, and identifies the mission of the group. The question to be answered or problem to be solved should then be posed and fully explained by the leader including necessary background about the issue of accessibility, the vocational program and previous barrier identification work. No questions from participants are entertained at this time because (1) your explanation should be sufficiently clear and (2) such questions might inhibit group members' initial responses. After explaining the mission and question, you, as group leader, initiate group activity according to the following schedule.

**Activity 1: Silent Generation of Ideas in Writing.** After you have presented the background information and have read the nominal group question aloud to the group, you should instruct the group to write their ideas in brief phrases or statements on the provided worksheets. Ask the group to work silently and independently. As leader of the group, you are a working participant and should also write down your ideas silently and independently. You may answer clarifying questions but avoid making any statement that might direct the group or focus their attention unduly on a particular item or area.

The silent generation of ideas in writing should take approximately five minutes; it should not exceed ten minutes. Generally, five minutes is adequate time for generating a large number of useful and different ideas.

You can perform your role as group leader more effectively by being sure that you: (1) have presented the question in writing and have displayed it in full view of the group, (2) resist clarifying non-process related questions which might direct or impede the group, (3) serve as a model of good group behavior by writing in silence, and (4) sanction individuals who disrupt the silent independent activity.

**Activity 2: Round-Robin Recording of Barriers.** After participants have completed the silent generation of ideas, the next NGT activity is to record the ideas of the group members on a flip chart visible to the entire group. In this step, go around the table asking for one barrier statement from one member at a time. Write each idea on the flip chart as it is suggested; proceed to ask for another idea from the next group member in turn. Your task during this step in the process is simply to record all of the ideas offered by group members on the flip chart which is visibly displayed in front of the group. During the idea recording process, members should not discuss or defend their barrier statements. Time will be provided later for discussion and clarification of the items that are generated.

This step in the process provides for equal participation among group members in the presentation of barriers, focuses thinking on the problem, helps to separate ideas from personalities, and provides a written record of the group's thinking. The written list is an important early group reward.

As the group leader, it is important for you to describe the

procedures for this step clearly, to solicit ideas from the group members in brief words or phrases in a round-robin fashion, to communicate to the group that variations on a theme are desirable, and to record on the flip chart the suggested ideas as quickly as possible. Be sure to sanction any type of disruptive behavior that may occur during this step. An example of a disruptive behavior would be an individual trying to discuss ideas rather than simply list them; other disruptive behaviors would include arguing with ideas as they are presented, asking the leader to rule on duplications or engaging in side conversations.

Remember the goal of this step is a rapid, accurate list of ideas in brief words or phrases, recorded in writing on a flip chart in front of the entire group. This list will become the guide for futher discussion; it provides a clear picture of the group's thinking and is the group's product. Redundancy is permissible at this step in the procedure, though in practice members often simply do not suggest ideas which someone has already essentially presented.

What is a round-robin procedure and why is it useful in NGT?

Answer:
Round-robin means each person gives 1 idea at a time and everyone has a turn before you go around again. This method insures equal participation by all group members.

**Activity 3: Serial Discussion for Clarification.** After all barriers or problems have been recorded, the next NGT activity is to discuss each of the items listed by the group. Serial discussion means addressing each idea listed on the flip chart in order and allowing a short period of time for the discussion of that item. As the leader of the group, you will point to item #1, read it aloud, and ask the group if there are any questions, clarifications or statements of agreement and/or disagreement which members would like to make about that item. Allow a brief period of time for discussion, if there is any; after discussion, address attention to item #2, then to item #3, and so on. It is important to remember that the major objective of the discussion is to clarify, not to win arguments. Clarification will help other members understand the meaning of the brief words or phrases on the chart. Clarification is not restricted, however. It may include discussion of the logic or analysis behind an item as well as the relative importance placed on the item.

During this step, lobbying, aggressive interaction or disruptive argumentation should *not* be allowed to occur. The purpose of serial discussion is to enhance clarification and to minimize influence based on verbal prominence or status. The group leader should pace the discussion by not allowing discussion to focus unduly on any particular barrier or to degenerate into argument.

If there are differences of opinion on a particular item, the leader should allow both points of view to be aired before shifting group attention to a discussion of the next item. Differences of opinion will be accurately recorded in the voting procedure, a later activity in the Nominal Group Technique.

The leader must attempt to balance discussion across all items, making sure that no item suffers from inadequate clarification due to time constraints. Some items may not need substantial clarification. Still, the leader should ask each member of the group if they have a clarifying

comment or a question. Make sure that each person has an opportunity to comment on every barrier.

Individual members should not be required to clarify their own items. The leader should instruct the group members not to ask individuals to explain items unless the individuals choose to do so. Although most individuals will volunteer to clarify their own items, it should be established that clarification is a group task and not necessarily the responsibility of the person who suggested the barrier.

**Activity 4: Preliminary Voting on Barriers.** After completing the list of barriers, the next NGT activity is the preliminary voting on suggested items. The average nominal group process meeting will result in more than 12 items being suggested by each group during the barrier generation phase. Through discussion and clarification, group members will come to understand the meanings of the items, the logic behind them and arguments for and against the importance of each. The next task is to determine the relative importance of individual barriers through a combination of individual judgments. In order to make this determination and to increase judgmental accuracy, you will have group members make individual judgments and express these judgments mathematically. Each member of the group should have in front of them five 3" x 5" index cards. Ask group members to select the five most important items from the entire list of barriers on the flip chart. Members should write each of the five items on a separate 3" x 5" card.

The voting process is uncomplicated. After each group member has selected five barriers and written each on a separate card, ask group members to choose the card on which the item they consider to be most important is written. Instruct members to write the number "5" in the lower right-hand corner of the card and underline that number three times. Have group members turn the card they numbered over. Next, instruct them to look at the remaining four cards. Of the remaining four cards, have the group members select the card on which the least important barrier is written, write the number "1" in the lower right-hand corner and underline that number three times. After turning that card over, have the group choose the most important item listed on the remaining three cards, rank this item "4" and underline the number three times. Then, select the least important item of the two remaining cards, rank the item "2" and underline it. Instruct the group to write "3" on the last card and underline the number. The figure below, Index Card Indicating Voting Process, illustrates a sample index card.

The group should be given a short time to reexamine their rankings before passing the cards to the leader. After collecting the cards the leader may shuffle them to preserve anonymity and insure that no individual's voting pattern can be identified. However, voting can be public, particularly

**INDEX CARD INDICATING VOTING PROCESS**

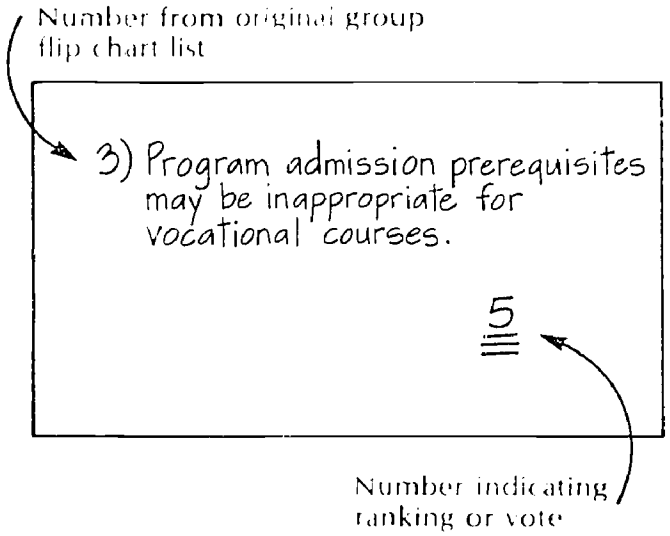

if revoting is not contemplated. You should then make a balance sheet on the flip chart by numbering the left-hand side of the sheet in accordance with the number of items from the round-robin listing. Ask one member of the group to read each item number and the rank number from the collected stack of voting cards. With one group member reading and the leader recording, the preliminary vote is tallied as shown in the figure entitled, Sample Tally Sheet for Recording Rankings and Calculating Priority Items.

At this point, the Nominal Group Technique process can be concluded.

**Activity 5: Discussion of Preliminary Voting** and **Activity 6: Final Voting.** In instances where increased judgmental accuracy is desired or where the output of several small groups must be combined, two additional activities should be used. These are: (1) discussion of the preliminary vote and (2) revoting. In situations where you are working with only one group, discussion of the preliminary vote (Activity 5) and final voting (Activity 6) are conducted similar to Activities 3 and 4 described earlier.

## SAMPLE TALLY SHEET FOR RECORDING RANKINGS AND CALCULATING PRIORITY ITEMS

| Item Number* | Rank | Times Ranked | Sum Of Ranks | No. of Ranks x Sum of Ranks | Priority |
|---|---|---|---|---|---|
| 1 | 3,2,2,2,1 | 5 | 10 | 50 | 6 |
| 2 | 4,5,5,5 | 4 | 19 | 76 | 1 |
| 3 | 5,5,5,3 | 4 | 18 | 72 | 2 |
| 4 | 2,1,3,4,2 | 5 | 12 | 60 | 4 |
| 5 | 5,4,4,3 | 4 | 16 | 64 | 3 |
| 6 | 4,4,3,4 | 4 | 15 | 60 | 4 |
| 7 | 3,1,1,2 | 4 | 7 | 28 | 7 |

*List as many as needed.

In this instance, you should help the group examine inconsistent voting patterns and provide an opportunity to discuss items which are perceived as receiving too many or too few votes. In *Activity 5, Discussion of Preliminary Voting*, you should define the discussion task as clarification rather than social pressure to get members of the group to change their minds. The goal of clarification also serves to insure that the discussion remains brief so as not to distort perceptions of items which are not discussed. Please follow discussion procedures of Activity 3.

How is the final list of alternatives determined?

a. selected by the leader
b. thought up privately by group members
c. through debate
d. secret ballot
e. by outside team of evaluators

Answer: d

In *Activity 6, Final Voting*, individual judgments will be combined into a group decision. The final vote determines the outcome of the meeting, provides a sense of closure and accomplishment, and documents the group's judgment. Voting follows the procedures followed in Activity 4.

Activities 5 and 6 should also be used when you have had to split your faculty or school system personnel into several small groups in order to conduct the nominal group process. For example, if your meeting included 22 people divided into two groups of 8 and one group of 6 individuals, then at the end of Activity 4 you would

have five priority strategies for each group, or three sets of statements.

Integration of the lists produced by these three groups can be accomplished through procedures similar to those identified in Activities 5 and 6 above. After concluding Activity 4, bring the members of the different groups together and compile the ranked output of the three groups into a single list of priority strategies. Following the compilation of the list, proceed with serial discussion of each item in order to clarify each item on the compiled list. While conducting this serial discussion, duplicate items can be eliminated and/or regrouped as appropriate, thereby reducing the size of the overall list. In addition, discussions about each item as well as information about the preliminary voting permit the entire group to consider the importance of each item compared to the others. The group leader must insure that each item is discussed sufficiently to encompass all points of view; however, excessive time should not be devoted to any single item.

After clarification and discussion of the items, the membership should be instructed to vote on the entire list following the procedure outlined in Activity 4, as described earlier. As you will recall, this procedure called for each group member to select five most important strategies from the list of items, and to write each of those strategies on a single 3" x 5" card. The items on the cards are then ranked with the most important item receiving a rank of 5 and the least important item receiving the rank of 1. The cards are collected and the votes are tallied on a tally sheet as depicted in the figure entitled, Sample Tally Sheet for Recording Rankings and Calculating Priority Items. Calculation of the priority items can be accomplished through multiplication of the number of times the items was ranked by the sum of the ranks. The items with the highest overall scores are the most important items.

In the last discussion period of the NGT, what do group members talk about?

a. time and place of next meeting
b. whether the NGT was worthwhile
c. the first rank-ordering
d. their initial ideas
e. whether to vote by secret ballot or not
f. who should be the group leader

Answer: c.

At the end of Activity 4 or Activity 6, you will have completed the Nominal Group Technique process. At this point, the most important barriers or problems will have been identified and there will be consensus among involved personnel about the issues. Note that implementation of the NGT takes at least two to three hours. Because the activities of the process are structured, a break for participants is possible. After the session is ended, the leader should summarize the procedures and results in a written report to distribute to all participants.

## ADDITIONAL RESOURCES

The Nominal Group Technique is well-publicized, and numerous resources, people and written materials are available to assist you with the method. Delbecq and Van de Ven, who first developed the technique, have published many books and articles which are available through libraries and bookstores. One in particular, *Group Techniques for Program Planning*, Scott, Foresman and Co., 1975, is recommended for your use. For reports of research comparing this technique with other group methods having the same purpose, you might check the subject indices of *Psychological Abstracts and Current Index to Journals in Education* for current articles of interest.

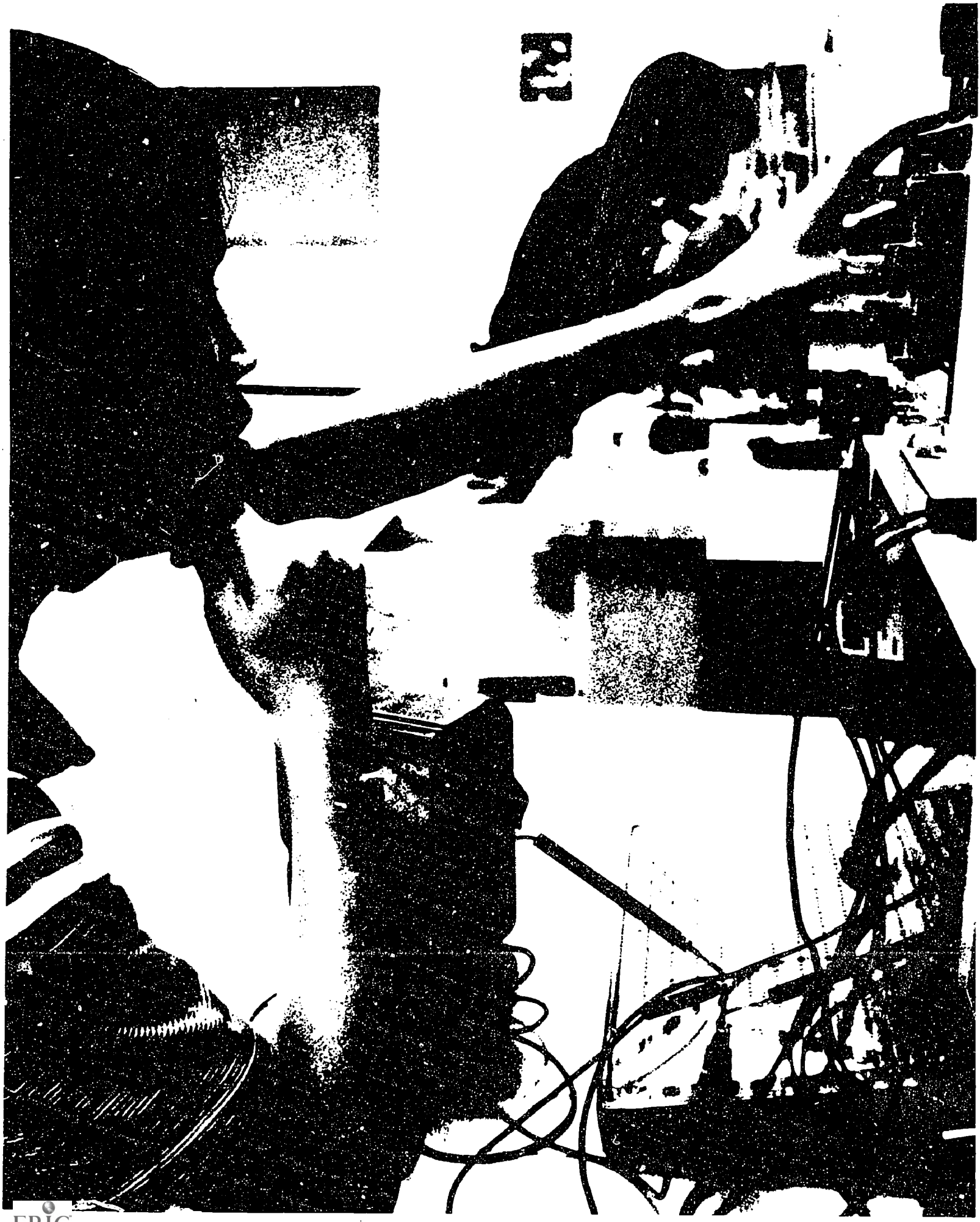

# Delphi Technique

Developed by Helmer and Daley at the Rand Corporation in the late 1940's, the Delphi Technique has been used in a variety of settings such as medicine, science, business and education to identify needs and goals to determine planning priorities. In the past, the Delphi method as been used in both "general" and "special" education planning (Sirois and Iwanicki, 1978; Cypert and Gant, 1971; Mann, 1975; Cone, 1978; Rasp, 1974; Schipper and Kenowitz, 1976). Recently, it has been applied to the problem, identification of barriers to vocational education for handicapped students (McClellan and Newton, 1977; Hughes, 1978).

The Delphi Technique is a series of carefully designed questionnaires distributed to a group of persons who have special knowledge about the topic. The group may be experts or they may represent several constituencies who have an interest in the problem. The group never actually meets, but the results of each questionnaire are reported to all participants before they answer the subsequent questionnaire. Each set of questions is based on responses to the last set. The final questionnaire in the series usually requires voting or rank-ordering, so that a conclusion or consensus of the participants may be reported.

The kinds of problems which can be addressed and the nature of the output of groups using the Delphi Technique may be quite variable, making this a very flexible planning tool. Delbecq (1975) cited these as possible objectives: (1) identify and rank needs, (2) develop program alternatives, (3) aggregate expert opinions, (4) explore the basis of opinions, (5) share opinions on a topic, and (6) identify other information which aids the group in reaching consensus. The method has most often been used to collect the opinions of experts who would be difficult and expensive to assemble for a group meeting. However, it is appropriate for any group with knowledge about the problem under consideration. For example, the Delphi Technique has been used in the Charleston, South Carolina, school system (Cone, 1978) (1) by students, teachers and community groups to generate proposals concerning school vandalism and student disruptions and (2) by teachers to improve personnel policies.

---

Has this technique ever been used for barrier identification before?

☐ yes ☐ no

Answer: Yes.

---

What do people actually do when they participate in a Delphi process?

a. act-out different roles
b. get together and discuss problems
c. fill-out questionnaires
d. vote several times on who they want to be group leader
e. not criticize each other's ideas

Answer: c.

---

What kinds of things can be done using this method?

a. rank-order
b. generate alternatives
c. share opinions and information
d. reach consensus
e. all of the above

Answer: e.

## STRENGTHS AND LIMIATIONS OF THE DELPHI TECHNIQUE

The Delphi Technique has many advantages. It can be used to do several different things. Participants may have very different backgrounds and perspectives on the problem. Geography may be transcended too. In addition, no special training or talent is required to operate the procedure and participants easily understand what is happening.

The nature of the group "interaction" with the Delphi Technique is perhaps more productive and pleasant than with other methods. One advantage of the Delphi is anonymity which virtually eliminates conforming behavior. At no time is a group member required to defend his or her position before another. This insures that differing opinions will be welcomed without threat and used in working toward a common goal. The Delphi procedure also prevents domination of the group by its more vocal members. Equal representation of opinions is assured since there is no face-to-face contact. This makes a hetrogeneous group (members with varying personalities, different opinions, and unlike status) possible and highly productive.

Several requirements of the technique may limit its usefulness. The Delphi does require time and cannot be used when time is limited; the complete procedure will take a minimum of 45 days to complete (Delbecq *et al.*, 1975). Since the process requires ongoing analysis and feedback until its completion, much staff time also is required. Postage and followup phone calls to participants (if necessary) may make this technique moderately costly as well as time-consuming.

One final limitation is variable and difficult to calculate. The validity of the results of the Delphi Technique are directly affected by participants' willingness to stay involved with the project. "Dropout" rates, if high, will affect the group products in ways that cannot be measured after the fact.

---

With the Delphi Technique, members of the group never actually meet. How can this be advantageous?

_____

_____

Answer:
Several ways: reduces conforming behavior, prevents domination of group by the most vocal, guarantees equal output among members and greater output for the whole group.

---

How would you rate the technique in terms of kinds of problems which can be addressed?

| Rigid | Somewhat Rigid | So-So | Somewhat Flexible | Very Flexible |
|---|---|---|---|---|

Answer:
Very flexible.

---

What is the minimum amount of time this procedure should generally take?

a. 3 days
b. 10 days
c. 3 weeks
d. 45 days
e. 3 months

Answer:
d.

What happens if participants drop out of the group after one or two rounds?

_____

_____

Answer:
The results or final consensus cannot be said to represent the whole group, only those who finished; high drop-out rates mean lower validity.

Given this brief description and critique of the Delphi method, the most effective application of the technique becomes clearer. Its main advantage is that group members do not have to be assembled physically in order to participate and so the most popular application of Delphi has been to gather experts' opinions which could be tapped in no other way. In addition, the method can easily be used by non-experts proximally located to accomplish a *variety* of goals. Proximity of participants would overcome some of the time and cost limitations of the technique, though proximity would likewise reduce the costs of other group decision-making methods. The caution to prepare each questionnaire very carefully in order to obtain valid results still applies, however.

How would you rate the Delphi Technique on the following dimensions?

Ease of application for administration: _____
Low High

Adaptability to different problems: _____
Low High

Cost compared to other techniques: _____
Low High

Do you think it is suitable to your situation? ☐ yes ☐ no Why?

_____

_____

## WHEN SHOULD THE DELPHI TECHNIQUE BE USED?

The Delphi should be used whenever suggestions for a number of knowledgeable persons is desired who cannot be reasonably assembled as a single group.

## RESOURCES AND MATERIALS REQUIRED

The physical requirements for the Delphi Technique are minimal. Personnel time to compose the questionnaires is the largest single expense. Paper and printing costs are secondary. If the questionnaires are mailed and followed-up with telephone calls, additional expenses are incurred. Usually, participants do not have to be paid for their time as is true of most other methods.

The cost of using the Delphi procedures could vary considerably, depending on two factors: (1) whether someone could write, administer and summarize the questionnaires along with their regular job responsibilities and (2) the distances separating group members. Extra personnel costs could make the method too expensive as could the cost of postage for questionnaires and follow-ups. Van de Ven (1974) reported the real costs of a Delphi which appear in Figure 1. Note the date of the application and estimate the inflation rate over the last few years to obtain a rough idea of what a Delphi procedure would cost today.

---

Look at the table of costs published by Van de Ven.

a. Which questionnaire costs more to prepare?

_____

b. Why do you suppose this occurred?

_____

c. Drop-outs were more frequent for which questionnaire?

_____

d. How long did this Delphi take to complete?

_____

Answer:
a. Second, because the writer had to evaluate the first questionnaire in order to prepare it. b. Second c. Over 3 months and the final report had not been completed yet!

## HOW TO IMPLEMENT THE DELPHI TECHNIQUE

Three groups of people must be involved in the Delphi process. Management decision-makers such as superintendents, program coordinators must sanction the activity; professional staff members guide the process, develop and coordinate sending the questionnaires, and schedule meetings pertinent to analyzing and utilizing the questionnaire responses, and, professionals involved in vocational and special education and consumers of the services offered must respond to the questionnaires. How are these people selected and how many need there be?

Applying the Delphi procedures involves following a logical sequence of steps which are summarized in Figure 2, Diagram of a Delphi Procedure. Note that the number of questionnaires may vary depending on the problem addressed. Usually three or four rounds of questions suffice. The activities boxed in the figure are described in more detail in the following discussion.

**Activity 1: Selecting the Delphi Participants.** The size of the group will vary according to the educational unit's needs. You must

## FIGURE 1: ADMINISTRATIVE TIME, COST, AND EFFORT IN CONDUCTING THE DELPHI PROCESS

| | | # Responses Received Between Follow-up Reminders | # of Follow-up Reminders Made | # Respondents Refusing to Participate | Administrative Time in Man Hours | Administrative Salary ($2 50 per hour) | Cost of Supplies, Equipment, Stamps & Miscellaneous Items | Total Cost |
|---|---|---|---|---|---|---|---|---|
| *Delphi Questionnaire # 1* | | | | | | | | |
| 2/8/71 | Preparation of Questionnaire # 1 & distribution to 140 respondents | | | | 20 | 50 00 | 14 00 | $ 64 00 |
| 2/22/71 | Follow-up # 1 (Mailed) | 42 | 98 | 0 | 5 | 12 50 | 9 80 | 23 30 |
| 3/1/71 | Follow-up # 2 (Mailed) | 23 | 74 | 1 | 2½ | 6 25 | 7 40 | 13 65 |
| 3/8/71 | Follow-up # 3 (Mailed) | 12 | 61 | 1 | 2¼ | 5 50 | 6 10 | 11 60 |
| 3/11/71 | Follow-up # 4 (Mailed) | 7 | 52 | 2 | 2 | 5 00 | 5 20 | 10 20 |
| 3/15/71 | Follow-up # 5 (Phone) | 11 | 36 | 5 | 9 | 22 50 | | 22 50 |
| 3/18/71 | Follow-up # 6 (Phone) | 9 | 22 | 5 | 5½ | 13 75 | | 13 75 |
| 3/20/71 | Follow-up # 7 (Phone) | 10 | 9 | 3 | 2 | 5 00 | | 5 00 |
| 3/23/71 | Follow-up # 8 (Phone) | 3 | 4 | 2 | 1 | 2 50 | | 2 50 |
| 3/26/71 | Follow-up # 9 (Phone) | 3 | 1 | 0 | ¼ | 55 | | 55 |
| 3/29/71 | Follow-up # 10 (Phone) | 0 | 1 | | ¼ | 55 | | 55 |
| | | 120 | 358 | 20 | 49 75 | 124 35 | 42 35 | 156 35 |
| *Delphi Questionnaire # 2* | | | | | | | | |
| 3/29–31/71 | Preparation of Feed-back | | | | | | | |
| 3/29–31/71 | Preparation of Feed-back Reports & Questionnaire # 2 & Distribution | | | | 30 | 67 50 | 14 00 | $ 81 50 |
| 4/12/71 | Follow-up # 1 (Mailed) | 46 | 94 | 1 | 4 | 10 00 | 9 40 | 19 40 |
| 4/19/71 | Follow-up # 2 (Mailed) | 14 | 80 | 2 | 3½ | 8 75 | 8 00 | 16 75 |
| 4/26/71 | Follow-up # 3 (Mailed) | 11 | 69 | 1 | 3 | 7 50 | 6 90 | 14 40 |
| 5/3/71 | Follow-up # 4 (Mailed) | 9 | 60 | 1 | 3 | 7 50 | 6 00 | 13 50 |
| 5/12/71 | Follow-up # 5 (Phone) | 10 | 49 | 9 | 12 | 30 00 | | 30 00 |
| 5/17/71 | Follow-up # 6 (Phone) | 8 | 29 | 9 | 7 | 17 50 | | 17.50 |
| 5/21/71 | Follow-up # 7 (Phone) | 7 | 18 | 4 | 4 | 10 00 | | 10 00 |
| 5/27/71 | Follow-up # 8 (Phone) | 5 | 7 | 6 | 2 | 5 00 | | 5.00 |
| 6/2/71 | Follow-up # 9 (Phone) | 4 | 4 | 3 | 1 | 2 50 | | 2 50 |
| | | 104 | 410 | 36 | 71½ | 166 25 | 44 30 | 210 55 |
| Total Two-Round Delphi | | 324 | 568 | 56 | 121¼ | 290 60 | 86 50 | 366.90 |

From:
Van de Ven, Andrew. *Group Decision Making and Effectiveness, An Experimental Study.* The Comparative Research Institute of the Center for Business and Economic Research, Kent State University, Kent, Ohio, 1974.

consider the cost, amount of paper work involved, and anticipated drop-out rates. The larger the group of qualified participants, the more representative will be the opinions generated.

The following are some guidelines for selecting qualified group members, a critical factor in the success of the Delphi Technique. Participants should be (1) willing to commit adequate time to fill out succeeding questionnaires, (2) skilled in written expression, (3) knowledgeable in the areas of services necessary and available to the handicapped, and (5) representative of cr[illegible]eas. Such areas would be (1) vocational education—teachers, consultants, work-study coordinators, program directors, (2) vocational rehabilitation—counselors, clients, (3) special education—teachers, consultants, work-study coordinators, program directors, (4) consumers—handicapped students currently or potentially involved in vocational education and parents/guardians of handicapped students, (5) employers, and other professionals involved with handicapped students—employment security personnel, psychologists, health personnel, school facilities and transportation specialists, and program developers.

How many people should be involved at one time in a Delphi procedure?

a. minimum of 20
b. about 50
c. at least 100
d. 10 from each consumer group
e. indeterminate

Answer: c.

There are five requirements to be an effective Delphi participant. Name two of them.

1. _____

_____

2. _____

_____

Answer: Go back and check the text.

Contact selected participants to solicit their cooperation by telephone or letter. The Delphi process should be explained, an outline of what is expected of a participant provided, and an expression of appreciation for their cooperation and involvement included. If many refuse, additional names must be obtained.

**Activity 2: Develop the Questionnaires.** The questionnaire may be sent with the initial letter inviting participation or separately. The first questionnaire should pose one broad question such as:

> In order to address the challenge of providing accessibility for the handicapped to vocational programs, _____ School System wishes to identify the barriers (alternately: the conditions for removal of barriers, resources) to achieving this goal. As a concerned and respected member of the school community, we are requesting that you identify the transportational, architectural, attitudinal and awareness barriers from your perspective. Please list major barriers and feel free to elaborate on any or all of your choices.

It is important to remember that the purpose of this question is to identify the issues. Thus, the wording of the initial question is crucial and should be considered carefully.

**Activity 3: Send Questionnaire #1.** Be careful that the task instructions are clear and include a stamped, self-addressed return envelope. Send the questionnaire the same day the participants agree to participate and indicate a specific deadline for receipt of the responses, usually approximately two weeks.

The first Delphi questionnaire should be of a particular form which is

a. multiple choice
b. a letter explaining the purpose of the questionnaire
c. one broad question
d. particular questions regarding the respondents' background
e. anonymous

Answer: c.

What is the recommended time lapse between when you send the questionnaires and when you expect them to be returned?

Answer: two weeks

(Multiply this by the number of questionnaires you intend to send out to estimate the *shortest* possible time you might expect the Delphi to take.)

**FIGURE 2: DIAGRAM OF THE DELPHI PROCEDURE**

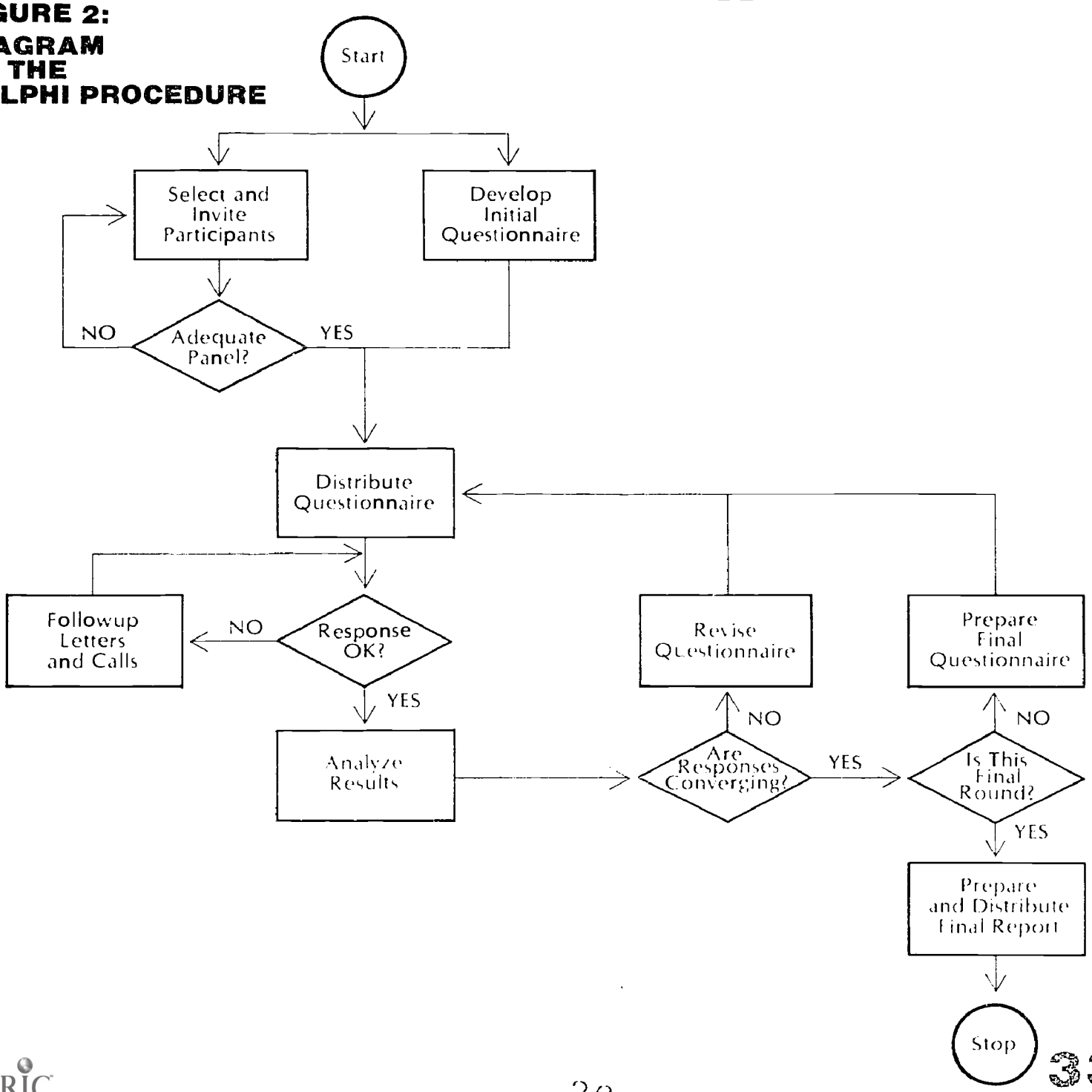

**Activity 4: Analyze the Responses to Questionnaire #1.** First the responses of participants must be listed on cards and may be broken down into important topic areas ; repetitions are permissible and probable. A set of cards is made for each of the decision-makers and staff members assigned to the Delphi project, probably a portion of your LPC. When this group is assembled, their first tasks are to sort the cards, stacking like responses together, and to label the stacks with a word or phrase identifying the contents.

Next, the group members must agree on a set of labels by having each member list their labels on a flip chart. The list is discussed and condensed by the group. Dividing into two-person teams, one for each label, members next develop these labels into complete sentences which are the content items of the next questionnaire.

It is important that the Delphi advisory group meet immediately upon receipt of the responses to the questionnaires. It is critical that the sorting and labeling be done as quickly as possible since maintaining questionnaire respondents' interest and motivation is crucial to the success of this technique. The faster the second and subsequent questionnaires are dispatched the better.

When the responses to the first questionnaire are received, the Delphi advsior group meets. In a few words, what do they do?

_____

_____

_____

Answer:
They sort and label their responses, agree on their labels and write items for the next questionnaire based on those labels.

**Activity 5: Develop and Send Questionnaire #2.** The purpose of the second questionnaire is to have respondents agree or disagree with the issues identified in Questionnaire #1 and offer any clarifications they might have. The participants also are asked to rank-order these issues by selecting the ten most important items and assigning 10 to the most important, 9 to the next most important, and so on. They are again asked to return the questionnaire by a particular date. A copy of a sample questionnaire for this activity is included in the illustration, Sample Questionnaire.

## SAMPLE QUESTIONNAIRE # 2

Code _____

Instructions: Please examine each of the following items as identified in Questionnaire #1 as important barriers to accessibility. If you wish to add comments expressing agreement, disagreement, or clarification concerning the items, please do so in the space provided. Also feel free to add items. Finally, please rank-order the ten most important items as you perceive them at this time, assigning 10 to the most important, 9 to the next most important, and so on.

| Vote | Barriers (from Questionnaire #1) | Agree Disagree | Comments or Clarification |
|---|---|---|---|
| | 1) Teachers lack specific skills for working with handicapped students | | |
| | 2) * | | |

*List as many as needed

**Activity 6: Tally Responses of Questionnaire #2.** As questionnaires are received, you must tally responses in terms of number of respondents voting for an item, the individual votes and the total vote. You also must note new barriers that might have been added as well as clarifications of existing ideas that respondents will have offered. A sample tally sheet is depicted in the following illustration. It suggests a simple format for counting votes.

## SAMPLE TALLY SHEET

Questionnaire #1

| Item | Number of Respondents Voting for Item | Individual Votes | Vote Count | Total Vote (# Votes x Vote Count) |
|---|---|---|---|---|
| 1) | 5 | 10-9-5-9-6 | 39 | 195 |
| 2) | 3 | 10-9-7 | 26 | 78 |
| 3) | 7 | 2-7-6-7-8-1-8 | 39 | 273 |

**Activity 7: Analyze the Results of Questionnaire #2.** You and the Delphi staff or LPC again meet and are presented with a tally of votes on various items and a summary of the comments about these items. The advisory group reviews the information and decides whether the respondent group is moving toward consensus. If consensus is apparent, the next step is development of Questionnaire #3. If, however, the respondent group is divided and/or still unclear about the issues, another exploratory questionnaire in which the questions are either more specific or more general is developed. Activities 5, 6 and 7 may be repeated several times.

Suppose that your initial question was, "What are the barriers to vocational education for the handicapped?" Of 60 respondents one mentioned, "Vocational teachers don't want to teach them," which became on the second questionnaire, "Negative attitudes of vocational teachers toward the handicapped." The response to this item was overwhelmingly in agreement. What should you do?

Answer:
Well, there is certainly consensus on the issue! You might consider further exploration of attitudinal issues of several groups in the school, wording the items carefully this time.

**Activity 8: Compose Final Questionnaire.** The purpose of the final questionnaire is to generate consensus on the important issues which remain after several rounds. Respondents are given summaries of all previous votings so they can see how the group is shifting. They are asked to vote one final time and to offer further comments. A deadline for submission of this questionnaire also is set.

**Activity 9: Analyze Final Questionnaire.** The analysis of the final questions is essentially similar to analyses of the second and subsequent questionnaires, except that the summary may be done by one person rather than the advisory group. More agreement can be expected, of course. The analysis should be focused on the average rank-ordering rather than the pattern of responses as in prior analyses.

**Activity 10: Prepare a Report of Findings.** The person initiating the Delphi Technique should prepare a final summary of the rankings of the ten or so most important issues which includes commentary on the items and the whole procedure. The statement also should indicate how the information will be used in the future. The final report should be circulated to those who responded to the questionnaire, the decision-makers and staff persons in the advisory group, and other members of the school community who might be interested in the results. It will be the major document the Local Planning Committee will use in other steps of the planning system.

What is the purpose of the final questionnaire?

Answer: Generate consensus

How does the analysis of this questionnaire differ from previous questionnaires?

Answer: May be done by individual rather than group.

## ADDITIONAL RESOURCES

The literature on the Delphi Technique is extensive. Delbecq and Van de Ven are the two most prominent advocates of the method and have written extensively on the topic. *Group Techniques for Program Planning*, 1975, is particularly recommended. Critiques are also available (Sachman, 1975). For research on the Delphi and for comparison of it with other methods look in psychology journals as indexed in *Psychological Abstracts*.


STUDENT
APH
SPEECH+
M
1
2
3
4
5
6
7
8
9
0

# Outside Experts

The use of experts to assist in the identification or solution of problems is a common practice in business, industry, city and regional planning, and many other areas outside of education. Within the education community, experts have been invited to address almost every problem facing American schools. Expert advice is even available on the present topic from (1) the President's Committee on Employment of the Handicapped, (2) regional site review teams representing vocational rehabilitation, special education, vocational education, advocacy and consumer groups, and (3) the writings of "national experts" who have identified universal barriers to vocational education of the handicapped (Revis and Revis, 1978; Tindall, 1975; Park, 1975; Dwyer, 1973; Clarcq and Maruggi, 1978; Carl, 1972; Leonard, 1978). Though the problem of barrier identification persists, there is no lack of expert *advice* on the topic!

Who is an expert? An expert is a person who has acquired special experience and knowledge of the problem or issue under consideration. A school system already includes many with experience and knowledge of the problem of barriers faced by the handicapped—teachers with special needs students, counselors, and students who themselves need vocational programs. To collect the opinions of "in-house" experts, the reader is referred to other techniques in this volume. This section covers techniques for using outside expert op[illegible] to address the problem.

Three techniques, *consultants*, *site review teams*, and *technical assistance*, have been grouped together in the category of Outside Experts because of the many similarities among them. All three bring to the school system special talent or knowledge to address a particular problem. All operate under a contractual agreement and for a specified period of [illegible]me. Each of the techniques is [illegible]able to a wide range of problems in many different kinds of organizations. To present each separately would involve needless redundancy and exaggerate differences which are actually quite small.

The primary difference among consultation, site review teams and technical assistance is the context in which they emerged. Consultants were first used in business and industry to solve technical problems of manufacturing; only later did consultants branch out into the areas of "staff development" and organizational problems. Site review teams evolved in large hierarachical organizations, first in government and then schools, and usually involved a group of upper level managers or "experts" inspecting and offering assistance to a lower level of organization. (Site review initially was not without an evaluative aspect.) Technical assistance is a relatively new approach to effecting change in public schools, particularly with respect to exceptional children, which has been funded in part by the Federal Government. Aside from these differences, all three techniques are managed in much the same way.

The use of Outside Experts to aid in the identification of barriers is quite flexible and adaptable. An Outside Expert may be called upon to identify general barriers, thereby establishing a starting point for a group using some other technique. Experts may be used individually as consultants or collectively as technical assistants or site review teams. Some expert opinion is free such as that in journals and periodicals, while other opinion is quite expensive such as that from private consultants. Experts are helpful in providing the administrator with a broader view of the problem, but it is strongly recommended that experts not be the only method used for barrier identification.

Just who is an expert anyway?

Answer: Person with special knowledge or assistance.

Are there any experts on barrier identification available locally? ☐ yes ☐ no

Answer: Should be yes!—teachers, handicapped students, for example.

How are site review teams, consultants, and technical assistants different?

Answer: They differ historically, in the contexts in which they were developed.

## STRENGTHS AND LIMITATIONS OF THE USE OF EXPERTS

The Outside Expert models have a number of strengths, chiefly, the objectivity possible with someone unaffiliated with the organization. A consultant may diagnose needs or present solutions based on information gathered without pressure of gain or loss due to the results obtained. An Outside Expert also may be able to work more effectively with the power structure of the organization than someone who is actually involved in it. A group of consultants, in a site review team or a technical assistance group, may generate a quite balanced view of the problem.

The use of Outside Experts has other advantages. Analysis of the problem may be completed more quickly by experts than by a staff member because outsiders can devote their full time to the effort and work under a contract deadline. Outside Experts also can gather information from *all* levels of the organization, not just the top. Their special knowledge and experience may contribute to a better analysis than could be done with existing staff of the school.

Using Outside Experts is often said to be inexpensive, but this statement needs some qualification. Experts are

inexpensive if provided free by some agency such as state or Federal Government. However, the offer of "help" from an agency which also monitors the school system is not without hidden political costs. In the case of technical assistance, competition for the contract with the schools between the organization offering advice and the federal agency (which also funds that organization) sometimes makes a "cost-free" offer less than free.

The limitations of using Outside Experts are also numerous. Primarily, using Outside Experts to identify barriers may not solve the problem in the long run for a number of reasons. Handing the problem over to experts outside the organization tends to free people psychologically within the organization from feeling responsible for doing anything about the problem; no enthusiasm or interest is generated in the organization for actually applying the solutions suggested by the analysis. No matter how good an analysis by Outside Experts is, it will not suffice to solve the problem without local commitment.

Use of Outside Experts may be disadvantageous for other reasons as well. Experts may have certain slight biases in their approach or opinions, of which even they may be unaware, that are difficult to detect or measure. The information obtained by this method is still second-hand, having been filtered through an additional party. Essentially, the work done will be only as good as the expert selected, and the criteria for selecting an expert for a particular task are seldom very clear. Again it is recommended that Outside Experts be used in conjunction with other methods to overcome some of the inherent disadvantages of the technique.

---

The *main* advantage of using Outside Experts is

a. costs are low
b. objectivity
c. *much* speedier delivery of services
d. high commitment to the solutions generated
e. guaranteed accuracy

Answer:
b.

---

How can some of the disadvantages mentioned be overcome?

Answer:
By combining experts with another technique which would promote commitment to solutions among the staff.

---

Outside experts are often touted as inexpensive if provided free from other agencies. Are they really free:

Why?

Answer:
No, because there often are hidden political costs associated with offers of free help.

## WHEN SHOULD THE EXPERT OPINION TECHNIQUE BE USED?

The use of Outside Experts by school systems has been advised under the following circumstances according to the American Association of School Administrators (1964). (1) When the awareness level of a problem is generally low yet further action is necessary, Outside Experts can help define the problem and plan how to deal with it. (2) When a generally "uneasy" feeling about the problem afflicts the staff, outsiders can make a disinterested evaluation. (3) When existing staff can not be readily freed from current assignments to gether detailed information on a problem or subject, Outside Experts are appropriate. They can verify information and recommendations already provided by professional staff when an issue is of critical importance to a school district. (4) When an issue is likely to arouse community conflict thereby endangering the relationship between the community, school board, and professional staff, an Outside Expert may be able to extricate both administrators and school board members from controversy. This is particularly true when school officials want sensitive data and need the consultant's expertise in operating in a professional manner so as not to involve school district personnel. (5) When it is necessary to train staff members in evaluative and statistical techniques, Outside Experts may offer invaluable assistance. (6) When it would help to resolve differences of opinion among those within a school district, professional staff, school board and/or community groups, Outside Experts or arbiters may be called in.

Outside Experts are particularly appropriate under certain circumstances. Could you summarize what several of those circumstances are?

Answers:
(1) When "experts" within the school system are too entangled in the conflict to be recognized as having an objective view or (2) when the staff lacks expertise in that area.

## RESOURCES AND MATERIALS REQUIRED

The method of using Outside Experts to solve school system problems, such as identifying barriers to vocational education, usually requires no materials be supplied by the schools. All questionnaires, reports, and other equipment are provided by the outside group according to the original contract. Though contracting services from experts outside the schools does not involve spending money for materials, there are definitely costs involved.

The cost associated with using consultants, technical assistance or site review teams can vary widely depending on two factors. The first factor is the size and complexity of the problem under consideration—the bigger the problem, the higher will be the cost. The second factor is what kinds of Outside Experts are available locally. Sometimes free consultation or outside advice is available from universities, state or federal government. Private firms which also

offer these services usually charge a fee which varies according to the size of the problem studied. It is impossible to quote even an average figure as the cost of using Ouside Experts.

Outside Experts may be contracted from a variety of sources. Many universities offer consultant services as a part of their educational administration program. Sometimes a school district may contract directly with a faculty member whose services are part of their regular assignment load and salary. In other cases, the services are purchased directly from faculty members who handle remuneration and contractual details independently. Not all universities offer these services on a regular basis, but school districts may feel reasonably comfortable about the objectivity of the professional advice received.

In a growing number of state education departments, free consultative help is available though the number of staff assigned to local projects varies from state to state. At times, university specialists may join the state experts to perform in-depth surveys. Since state education departments also monitor local programs, there is a general reluctance to use these "free" services.

Outside Experts also are available from the private sector. Management consultant firms offer services to businesses, government, and schools. Qualification for consulting in the public schools differ from those for business and industry, so special care in soliciting services is required. The cost of private management consultants is generally higher than university or state agency experts, but the money may be well spent, depending on the extent and depth of the services sought by the school district. Many educational experts are available outside of both university and management firms and have the experience and resources to offer top quality services, but again the administrator must carefully research their credentials. *Architectural firms* employ educational consultants but this practice varies widely. Outside Expert opinions from this group are valuabe if available. School districts sometimes purchase consultative help from a *commercial firm* already selling goods and services to the district but the choice of solution to a problem may be unduly influenced by the prior association. Some *parent* and *non-profit organizations* have available the services of an educational consultant or can recommend reliable local ones.

---

When a school system uses Outside Experts to do planning or problem-solving, who provides the physical supplies?

a. the school system,
b. the Federal Government
d. the experts
c. in a manner of speaking, all of the above

Answer:
c.

---

On what two key factors does the cost of this technique depend?

a. _____

_____

b. _____

Answer:
Complexity of problem and local availability of free consultation

Sometimes Outside Experts are free and sometimes they are not. Usually, the difference depends on

_____

_____

Answer:
Whether the experts work for a public agency (university or government) or private industry.

## HOW TO IMPLEMENT THE OUTSIDE EXPERT TECHNIQUE

**Activity 1: Selecting the Outside Experts.** Consultant selection is critical to the success of the technique. Compared in its importance to selection of an assistant superintendent or dean, the expert's work can affect the quality of the entire educational unit. In addition, there is not time for on-the-job training since a schedule already has been established. In the current literature there is no list of recommended consultant groups. The administrator must carefully investigate the capabilities of a particular outside consultant group in order to match their capabilities with particular circumstances.

Some criteria which may be applied to the selection of an appropriate group of outside experts are the following. They should have background experience and qualifications directly relevant or directly transferable to the tasks to be performed. They should be able to provide a list of references from previous clients which can be investigated and considered during the selection process. Outside Experts should provide exact information on how individuals within their organization and within the school district will participate in gathering information. The degree of involvement and the responsibilities of each should be delineated. Details of the intended usefulness of the study to the school and how the data and findings will be organized and presented should also be specified. Outside Experts should be able to define clearly their general philosophy of adminsitration as well as to show an understanding of relationships within a school district. Although the consultant and client philosophies may not be exactly the same, it is important that accord be reached on major issues in order to assure cooperation throughout the project. Outside Consultants or Experts also should be willing and able to give a clear basis for charges. It is important that the consultant set forth the nature and extent of services and attach cost to each rather than quote an overall charge.

The kind of proposal an outside group submits often indicates relative competency. The experts' ability to specify the services desired, to investigate at their own expense, to analyze the problem, and to offer a written proposal is an excellent overall indication of their qualifications. Outside consultants may wisely suggest the amendment of certain procedures or redefinition of a problem. All of these behaviors suggest experts know what they are about.

One final method of selecting an expert or experts from outside the educational unit to address a particular problem is personal recommendations from other professional educators. Names and evaluations may be obtained from national organizations of educators, state directors of education, local universities and colleges, and even directories and indices of such services found in public and school libraries. Perhaps the best recommendations might come from school administrators in nearby districts who have used Outside Experts for barrier identification or for other projects. As with other problems, this method of selection is a most popular one.

When you first talk to an Outside Expert whom you are considering hiring, what aspects of their presentation would indicate competence?

1. _____

2. _____

3. _____

Answers:
Any of the following: references, exact costs, man-hours of staff & expert time, organization of findings, understanding of school organization, clarity of their definition of the problem.

**Activity 2: Contracting for the Services of an Outside Expert.** In order to employ and work with outside consultants effectively, a preliminary definition of the nature and scope of a problem is necessary. The educational unit and the Outside Experts need to understand the needs of the unit and the services the outside agency will be providing. Goal statements and outcome objectives must be established jointly. All of these items and others to be considered below should appear in a written contractual agreement covering expectations, costs, and responsibilities which both parties sign.

Personnel matters also should be discussed and clarified in this document. It is important that the administrator indicate to the consultant what type of data and which people will be available relative to the problem. Any personnel which the Outside Expert will be paying also should be established, since this information is important in studying accountability for the services.

The kinds and frequency of reports from the outside group should be agreed upon as well and mentioned in the contract for services. Specifics should include what type of data will be in written reports (tables, charts, etc.), and if recommendations as well should be presented. The number of copies of reports needed should be indicated in the initial contract; the frequency of the reports would depend on the needs of the educational unit and the duration of the consulting contract. Oral reports, if permissible, should be mentioned in a contract. The school administrator's expectations of the final report should also be indicated. Se[illegible]lternative problem solutions should be requested; the expert's preference of alternatives should be stated and reasons for these preferences given. A good Outside Consultant should be able to offer the administrator the probable consequences of each action.

In the initial contract, it is important to be clear about followup responsibilities so that both the expert and the school administrator have similar expectations. For example, the school may be required to pay for additional services provided after the final report above the cost of initial services. Some followup time should be indicated in the contract to insure that recommendations may be clarified and implemented after the final report.

It is also well to note the circumstances under which specifications may be changed or amended. Anticipating that the expert has considerable experience in methods of problem definition, data collecting, and report writing, an administrator may, therefore, recommend alternative methods to those initially specified in the contract. An agreement between the outside agency and the school should be established before the onset of the project so that alternatives may be initiated in a mutually agreeable manner.

The contract between the schools and the outside expert group should contain a number of items. Place a check beside those items which should be covered.

____ a. goals and objectives
____ b. conclusions to be reached
____ c. a total overall cost figure
____ d. provision for amendments
____ e. exact length of final report in number of pages
____ f. deadlines for completion
____ g. number and kinds of reports
____ h. how many of the experts' meals the school system will pay for

Answers:
a, c, d, f, g

**Activity 3: Working With the "Experts."** It is important for the administrator to orient the consulting group to the educational staff, and to outside agencies with which the experts will have to deal, such as employers. Effective change depends upon involving those within the organization who must do the changing. The involvement of the key staff early and often during the consultative process is critical to the successful utilization of outside experts.

What kinds of activities might an Outside Expert or consultant perform in an educational unit, particularly in helping to identify barriers to vocational education of the handicapped? They might help collect information about barriers using personal interviews or questionnaires either themselves or by assisting local staff members in doing these tasks. They might produce printed materials to help schools identify barriers or even to suggest solutions to them. If the expert were hired because the issue was so emotional or controversial that no one in the school system could be objective about it, then their task would be to open up dialogue about the problem among the disagreeing factions within the school. The activities in which an outside expert might engage are quite varied but would be specified completely in the contract accepted by both parties.

When working with Outside Experts under contract, an emphasis on written reports can be expected. Reports should contain a summary of findings and recommendations. Oral and written reports should be given to some or all of the school board members since most school boards are responsible for contracting with the Outside Expert. Any reports that form the basis of board action should be issued at a public board session. Written reports should represent only partially the end result of the consultation services; periodic followup visits and meetings should be scheduled in order to maximize implementation of decisions based on the expert's recommendations.

Outside experts can perform many different services for the educational unit. Name any two of them.

a. _____

b. _____

Answer:
interview, write questionnaires, produce written materials, facilitate dialogue, provide additional information.

Compared with other methods for identifying barriers, how involved is the school staff in the process?

a. much more so
b. somewhat more involved
c. about the same
d. somewhat less involved
e. much less

Answer:
d and maybe e

Though Outside Experts can do a variety of different things for an educational unit, they *all* must

Answer:
write reports

**Activity 4: Evaluation.** Evaluating the consulting process should be an ongoing joint activity of the educational unit and the group of Outside Experts. The educational unit may base its evaluation on the end results which should have achieved major organizational goals as outlined in the initial contract with the expert or expert groups. The school staff's ability to answer the following questions affirmatively may indicate the relative success of the consultative venture. Was the expert's time and resources, as well as the educational unit's time and resources, used to maximum advantage: What was accomplished by the process, viewing it from beginning to end? Has the process improved the staff's understanding of the problem? Can the school deal effectively with similar situations in the future utilizing what they have learned? Further explicit information regarding criteria is available elsewhere (American Association of School Administrators, 1964).

Why is the use of Outside Experts as a problem identification technique easier to evaluate than some other methods?

Answer:
Because the original contract spells out exactly what should have been done.

What is the educational unit left with at the close of the contracted period?

Answer:
Written summaries of information collected and recommendations of the expert(s) based on that information.

## ADDITIONAL RESOURCES

The literature on using Outside Expert opinion for problem identification is extensive with respect to consultation but restricted with respect to site review and technical assistance techniques. There are many books on consultation, offering advice on how to select experts, how to work with them, and how to evaluate what they produce; Lippitt and Lippitt's re[illegible]ook which describes consultation in the educational context is as good as any other on the topic. Site review teams are familiar to most educators, but recent evaluations of their effectiveness can be found in trade journals such as *Educational Technician and Phi Delta Kappan.* For an overview of technical assistance programs. See *National Technical Assistance Programs* (Reynolds, 1974).

# Community Impressions

In the literature on needs assessment, of which barrier identification is but a special case, there are two other "types" of techniques which have been popular. One type involves gathering the opinions of consumers of educational services in order to assess needs. In the other general type, investigators look at previously collected information on frequencies of problems and try to guess present or future needs of their community. Because of serious weaknesses in both types of approaches, the Community Impression Technique, which combines them to overcome some of the disadvantages of each, is one of the recommended techniques for identifying barriers to vocational education for handicapped students.

## BACKGROUND

**Consumer Opinion Techniques.** People living within a school community are in contact with the educational unit either directly through use or indirectly through observation. This contact makes community members valuable sources of opinions regarding the needs of the school district. The behaviors and attitudes of the community provides clues to the accessibility of the educational services to the community as a whole. These are impressionistic approaches using citizens' reports to assess needs in relation to services provided. *Community forums* and *key informant* are the two most frequently used methods in this category.

The community forum technique has been used in many social service fields, particularly mental health (Siegel *et al.*, 1975). It is an open meeting which gives all members of a community the opportunity to share views or feelings about a particular issue. In format it resembles a "hearing" but is more open and flexible. Any person attending may express his or her views on the subject. The meeting usually lasts three to four hours with some of the meeting time used to disseminate information on new programs and to introduce community members. However, the major thrust of the forum is to elicit as many views from as many people as possible on a single issue. Although administrative decisions may be improved by the views expressed at the forum, it is rare that the forum information is the sole basis for a decision.

The most appropriate use of the community forum is to collect feelings and impressions from the community firsthand. The flavor and texture of consumers' opinions cannot be captured as well by other methods such as questionnaires. It also provides publicity for the educational unit's efforts to listen to the people it serves and informs the community of the school administration's intents and actions.

---

Compared with other methods of barrier identification, the community forum technique is *best* at

a. reaching different constituents
b. generating consensus
c. exploring a problem in-depth
d. capturing feelings
e. deriving long-range implications of different solutions

Answer: d.

There are a number of advantages and disadvantages to the community forum which may limit its usefulness as a tool for an educational unit. Planning and publicity may take only a few weeks and the cost (including staff, publicity, transportation, and recording of the results) is minimal. With this method individuals who have not been served by the school may be invited to express their concerns, thereby encouraging thoughts about issues that otherwise may not have been available. One of the major disadvantages of the forum is that not all members of the community can or will attend the meeting, and the resulting barriers identified may not represent adequately the whole community's opinions. Then too, it usually is not possible for every person attending to have an opportunity to speak and also common that those who do speak run out of time. Pertinent information which may be quite relevant to the topic may never be presented. Although many barriers may be identified, the discussion usually does not go beyond the identification stage, and causes or possible solutions are rarely obtained.

Below are some possible "advantage-disadvantage" descriptions of barrier identification techniques. Which pair best fits the community forum method?

a. cheap-inaccurate
b. simple-expensive
c. quick-involves too few people
d. cheap-very complicated
e. precise and accurate-time consuming

The key informant technique is an interview method that can provide a broad view of community needs and present services. Educational leaders and/or agency representatives can use it to assess existing or needed services within a community. This technique is particularly appropriate when better relations and more support is sought among influential members of a community. It can be used by the educational community to develop support for program change or new program development.

The criteria for selecting "key people" to interview is the individual's knowledge of the community in terms of its needs and services. Key people representing special populations either as providers or consumers should be included. Administrators, educators, students, and workers in the areas relevant to vocational education—special education, health care, and support services—should be considered when addressing barriers to accessibility.

Personal interviews, mailed questionnaires, or telephone interviews may be used to collect information from key informants, though the personal interview is much preferred by users of the technique. Beginning with a previously composed list of needs, the interviewer should elicit or have the key informant rank order barriers and needs. Open-ended questions which encourage new ideas or stimulate broader thinking might be used. At the other extreme, when needs have been previously established, the interviewer might simply ask the frequency of occurrence of a given need. Interviewers should be provided instruction about proper use of forms, coding responses, and asking "leading questions," and probing responses.

The results of the interviews should be summarized and put into a table so that the interpretations may be discussed in a group meeting after the interviews have taken place. At such a meeting the key informants may establish priorities and make recommendations about the program. A final report summarizing the method, purpose, findings and recommendations of the study should be prepared and mailed to all participants to foster interagency cooperation and communication.

Who are the "key people" in a community?

Answer:
Persons who know well the needs and services of the community.

What is the most frequently used method for collecting information from key informants?

a. mailed questionnaires
b. community forum
c. Dephi technique
d. personal interview
e. outside experts

Answer:
d.

The key informant approach offers the advantage of being simple and inexpensive to use. It promotes the support of influential individuals in the community which is particularly useful when a new or modified program is being considered. Its major limitation is that the results will most certainly be biased toward the influential persons or organizations being surveyed. It also is possible that "key informants" may not be aware of all needs which exist in their community.

As may be gathered from the description, the consumer opinions techniques rely on the memory, accuracy, and integrity of those respondents who participate in the process and on the judgment of those who invite their participation in the needs identification. Though the techniques are simple and inexpensive, they are more subject to bias than other suggested methods. The "existing data" techniques which follow are as objective as the consumer opinions methods are subjective.

**Existing Data Techniques.** Using existing information to assess needs of an educational unit or other public agency involves projecting estimates of future demands upon the unit given what is known about rates at which the problem occurs in a given community. Information may be assembled from census figures, local government agencies charged with profiling the community, and from school records. There, of course, is no guarantee that such figures are accurate, only that some information is probably better than none. Methods which involve using existing information are social indicators, analysis, epidemiology and rates under treatment.

What kinds of information are already available to educational units which could also be used to identify barriers to vocational education of handicapped students? Information on kinds of programs, location of services, types of handicaps presently included in those programs would be important and are already collected by the schools. Comparing current handicapped population figures with state and national norms would indicate roughly how many unserved students are presently "out there" in the community. Using (1) the projected growth rate for the community to figure the number of probable students in each handicapping condition over the next few years and (2) existing data to predict where in the community they might be located would also help in planning and identifying barriers.

Several techniques fall into the category of existing data methods. *Epidemiology* is the study of the distribution of disease, defects, and disabilities in a population. Originating in medicine and public health, its primary use has been in planning preventive services. Epidemiologists look at environmental variables such as crowding and try to identify "high risk" populations in order to focus more services in those areas. The "child find" activities in response to P.L. 94-142 is an example of the epidemiological approach.

Developed by social scientists, *social indicators* is quite similar in method to epidemiology but often recognizes as data descriptions of attitudes and social organizations (gathered from questionnaires) which the epidemiologist would less likely accept. Both epidemiology and social indicators examine the correlations among variables to establish hypotheses about causal relationships, a practice which can lead to erroneous conclusions about the problem being studied.

*Rates-under-treatment* also emerged in the field of medicine as a method of comparing the effectiveness of different treatment methods by carefully observing rates of recovery and different constitutional variables which tended to interact with different treatment regimes. Like the other two methods, it relies heavily on the scrutiny of existing files of information to make guesses about future needs. The rates-under-treatment method is focused on a much smaller population than are epidemiology and social indicators.

Existing data techniques are not perfect. The chief advantage is that the investigator uses existing information rather than collecting more. The problems with these methods lie not with the data collected but with what is done with it and how the results are interpreted. To be useful in identifying barriers, local figures must be compared with state or national norms and a conclusion drawn about needs and barriers, and there lies the possiblity of error. Causal inferences based on random correlations between variables is another problem with techniques, particularly in cases when it is not clear whether the variable or factor should be labeled a precipitating condition or an outcome!

How can the "existing data" techniques be used in the identification of barriers to vocational education of handicapped students:

Answer:
They can't directly; existing data must be used to determine the extent and possible causes of problems and to project future needs.

Which of the following kinds of information might be included in the data collected with these methods?

a. percentage of school population in each handicapped category
b. school growth rate
c. opinions of school principals
d. frequency of use of vocational facilities by non-handicapped
e. rates of services to handicapped by an adjoining school district
f. location of services
g. use of television for entertainment by handicapped students

Answer
a, b and f

What is the main disadvantage to these existing data techniques?

Answer
Reaching false conclusions about causal relationships

**The Community Impressions Technique.** A method which combines existing data techniques with community opinion techniques to enhance both is Community Impressions. Developed in the field of community mental health planning, it involves the use of existing information to identify groups with the greatest service needs and the gathering of these "high risk" groups' impressions of their situations and needs. In the context of the present study, the group would be handicapped students who seek vocational training. The technique has been used successfully in contexts other than education (Miller, 1976) but is appropriate to the present problem and the educational context.

With Community Impression Techniques, the administrator collects existing data relevant to educational needs in a community and combines this information with impressions about such needs gathered from interviews of key individuals and groups or persons identified as having the greatest unmet needs in the community. The approach is relatively quick and inexpensive. An administrator who particularly seeks to involve people identified as having the greatest needs and the processes developed to alleviate these needs will find this method well suited to their purposes.

## STRENGTHS AND LIMITATIONS OF THE COMMUNITY IMPRESSIONS TECHNIQUE

Compared with other techniques, the Community Impressions Technique does not require much money or time. The data used usually are available in schools and the required interviews are relatively few. The expertise required to apply the method most probably is available within the school organization and would not have to be hired from outside the organization.

The unique combination of information from two distinct sources is another advantage. Explanations for unusual frequencies or attendance patterns observed in the factual information may be offered by the people who are interviewed. Too, statistics on the growth rate of the whole system or of certain school encatchment areas may provide clues as to why consumers in particular areas are more dissatisfied with services that consumers in other areas.

There are some distinct disadvantages to the Community Impressions Technique though. With it the administrator is not guaranteed that all needs will be identified nor even that persons with the most urgent needs will be involved in the process. Just how inaccurate the technique is may never be known, for estimates of reliability and validity that can be applied to other barrier identification techniques cannot be applied to this approach.

Community Impressions combines what two kinds of techniques?

Answer: Existing data and consumer opinions.

With what types of educational problems has this method been used successfully?

a. identifying barriers to vocational education
b. assessing needs for new school buildings
c. planning mental health services
d. mainstreaming physically handicapped into academic programs
e. none

Answer: e

Why is the combination of interview and existing data advantageous?

Answer: Because one can help explain the other so that a more complete picture is obtained.

## WHEN SHOULD THE COMMUNITY IMPRESSIONS TECHNIQUE BE USED?

The Community Impressions Technique would be the most appropriate method of those included in this manual under the following circumstances. If the educational unit already had collected statistical information of the school population, then Community Impressions would be appropriate. If the size of the system would make it too expensive if not impossible to seek the opinions of a fair proportion of educational services' consumers using a survey or questionnaire, then this method would be a reasonable alternative since it samples consumer opinion. A third consideration would be time: Community Impressions requires little preparation and so can be used when time is limited.

## RESOURCES AND MATERIALS REQUIRED

Those materials necessary for using the Community Impressions Technique already are available in most educational units. The statistical information on populations, programs and facilities most often are stored in computer or written records. Just paper and pencils would be required for the interviews. If the administrator chooses to hold a community forum at the conclusion of the exercise, a large assembly hall would be available to the school system. None of the steps involved in the Community Impressions method would tax the expertise of personnel presently employed by the school system to do planning either.

As with most methods, the cost of using Community Impressions to identify barriers would be variable, depending on several factors. If the statistical data were readily available, which is assumed, then this method would be equal in cost or slightly cheaper than most methods. If many hours had to be spent collecting and organizing information, then the cost would rise. The personal interviews would cost staff time but would be few in number. For all these reasons the Community Impressions Technique would be average or slightly below average in cost for a school system.

For which type of school system is the Community Impressions best suited?

a. small, rural system
b. one that has statistics compiled
c. one embroiled in conflict with constituents
d. one that has already interviewed some consumers
e. one which can afford nothing else

Answer: b

The materials required to use the technique are numerous and costly, true or false?

Answer: false

On the average, how would you compare Community Impressions with other techniques for identifying barriers?

| Very Cheap | Slightly Cheap | Average | Slightly More Expensive | Very Expensive |
|---|---|---|---|---|

Answer: "average" to "slightly cheap".

## HOW TO IMPLEMENT THE COMMUNITY IMPRESSIONS TECHNIQUES

The Community Impressions Technique involves three distinct activities. Interviews with key informants in the community must be conducted, and relevant information from school records, kinds and numbers of handicapped students in different programs, for example, must be collected. These activities may be conducted simultaneously or in either sequence. Having finished these steps, community forums with various consumer groups are conducted. Each of these activities will be discussed in some detail.

**Activity 1: Conduct Key Informant Interviews.** Interviews should be arranged with two to fifteen persons who live or work in the community. They are selected using several criteria such as longevity and type of involvement with the school system as well as the community at large. In short, the interviewee need not be an "expert" long or intense involvement with services to special needs populations which enable them to provide impressions of service needs would be important. Retired teachers, principals, long-time residents, members of community action groups, health personnel, and especially parents of handicapped children would all be likely candidates for the interviews.

The selected "key informants" are asked the same set of informal open-ended questions which are chosen, worded, and agreed upon before the interviews are conducted. One or more persons may conduct the interviews and they should be personal, though telephone contact is acceptable if the person being interviewed is well-known to the interviewer. Here are some sample questions that might be considered: What barriers exist in the school system that prevent handicapped students from enrolling in vocational education? Where are the handicapped populations most likely to be found?

**Activity 2: Collect Existing Data.** Existing information about the handicapped population presently being served by the schools in vocational programs needs to be collected and organized. This information should provide a picture of what programs exist which already have been adapted for the handicapped. Such figures as numbers of handicapped students, types of programs, location or services, and projected growth rates need to be collected. Knowing how many students are currently classified in each of the handicapping conditions also may suggest by way of omissions what groups are not being served and which program might be most easily adapted.

**Activity 3: Conduct Community Forum.** The final step in the Community Impressions Technique is a community forum planned and held for each group in the community identified as having significant unmet educational needs by the foregoing steps. The purpose of the forum is to validate the needs which have been identified, to explore the causes of the problems which consumers perceive, and to solicit solutions. Sometimes the problem is merely a misunderstanding between the school and the community which can be corrected by some information. If clear solutions are not evident, at least some compromise or temporary arrangement to alleviate the problem may be devised cooperatively. Most community forums conclude with participants feeling more positive about the problem and that they have contributed in a significant way to its possible solution.

---

The interviews conducted with the Community Impression Technique most resemble:

a. questionnaires, surveys
b. community forums
c. key informant techniques
d. Nielson ratings
e. the Delphi technique

Answer: c.

---

Which of the following bits of information would it be important to collect from existing files as part of compiling community impressions:

a. total high school population
b. percentages in each category of disability
c. breakdown of services by school
d. history of service to handicapped
e. number of administrators concerned with handicapped
f. number and kinds of vocational programs
g. number and kinds of academic programs
h. number of books per pupil in the library

Answer: b.c.d.f.

---

How is the community forum used in the Community Impressions context different from a community forum by itself?

_____

_____

Answer: It is held for specific groups in the community who have been identified as having significant unmet educational needs rather than for the whole community.

## ADDITIONAL RESOURCES

The Community Impressions Technique was developed by mental health planners, so references to them may be found in books and journals such as *Journal of Community Mental Health*. Most often Community Impressions will be described with a group of other techniques such as the nominal group method, so general topics such as "making needs assessments" should be explored, rather than searching for a writing on this topic. Siegel (1975) and Miller (1976) have contributed to comprehensive texts on community needs assessment and planning which include sections on the Community Impressions Technique.

# Concluding Activity

Now that you have completed reading the discussion of the two techniques you considered to be most applicable to your situation, please return to your Planning Record and enter the names of the technique you will use to conduct this step of the Planning System. You should then continue reading in the *Guide* with Step 2, *Identifying Barriers*.

# Sample Surveys

## INTRODUCTION

The following portion of this booklet includes seven sample surveys, each of which has been demonstrated to be a valid and reliable instrument for identifying and assessing barriers to accessible vocational education programs or facilities. Users of the surveys are encouraged to refer to the references cited for additional detail on the use of each instrument.

The first two are *Barriers to Enrollment in Vocational Education*, a multi-purpose survey related primarily to policy and practices, and the *Teacher Competency Scale*, a self-evaluation instrument for identifying staff development needs. These instruments are scored and interpreted by compiling infrequency counts or responses within sections of the instrument and analyzing those responses according to variables such as education unity category of respondent and so forth.

The next three—the *M-Scale*, the *ATHI*, and the *Semantic Differential Scales*—address attitudinal barriers. Like the other surveys they are easy to administer, but somewhat more difficult to score. The *Semantic Differential Scale* is scored like all semantic differentials. The *ATHI* requires transformations and data manipulations.[1] The *M-Scale* is scored by grouping some items as a subscale on attitudes toward mainstreaming while scoring other items individually.[2]

The last two are self-administered evaluations of existing barriers and needs in the area of policy and environment. The *Preschool, Elementary, Secondary and Adult Education Self-Evaluation* is designed to identify barriers related to policies and practices, and the *Architectural Accessibility Survey* is designed to identify problems related to physical accessibility.

---

1. Specifically, the *ATHI* contains 20 items, each rated on a six-point Likert-type scale ranging from -3, "I disagree very much" to +3, "I agree very much." It is scored by changing the signs items 2, 5, 6, 11, and 12 and totaling the 20 responses. The sign of the sum is changed and a constant of 60 is added. The possible score ranges from 0 to 120. The *ATHI Scale* scores are interpreted by inferring non-acceptance and lack of understanding of the handicapped for low scores, and acceptance and understanding of the handicapped for high scores. Seventy points has been suggested by the author (Lazar, 1973) as the division between acceptance and cceptance of handicapped persons.

2. The subscale on attitude includes items 2, 7, 9, 17, 19, 25, 30, and 37 after reversing the scores on items 9 and 30 before aggregation. A low score indicates acceptance of mainstreaming while a high score indicates opposition. Other items are scored independently. However, items 1, 5, 8, 10, 12, 26, 27, 29, 31, 32, 34, 35, 36, and 38 are related to needs while items 3, 4, 6, 14, 15, 16, 20, 22, 24, 28 and 39 are related to barriers.

# BARRIERS TO ENROLLMENT IN VOCATIONAL EDUCATION

by Vasant Kumar

*Handicapped Persons in Wisconsin Vocational, Technical and Adult Education Districts: Assessment of Educational Techniques and Identification of Barriers.* Madison, Wisconsin; Wisconsin University Vocational Studies Center; Washington, D.C.: U.S. Office of Education, 1977.

**Instructions:**

The statements listed below were identified by persons working with handicapped students as barriers that prevent these persons from *enrolling* in vocational programs. Please indicate the level at which you agree or disagree with these barrier statements or indicate if you have no basis for an opinion due to lack of knowledge or experience with these barriers.

Circle one of the following for each barrier statement:

NB — *No Basis for Opinion*
SA — *Strongly Agree*
A — *Agree*
D — *Disagree*
SD — *Strongly Disagree*

**1. ATTITUDINAL AND EMOTIONAL BARRIERS: Handicapped Students Are Prevented from Enrolling in Vocational Programs Because Of:**

| | | | | | | |
|---|---|---|---|---|---|---|
| a. | Their poor self image | NB | SA | A | D | SD |
| b. | Their lack of confidence | NB | SA | A | D | SD |
| c. | Their fear of trying | NB | SA | A | D | SD |
| d. | Their fear of accepting responsibility | NB | SA | A | D | SD |
| e. | Their fear of opposing family wishes | NB | SA | A | D | SD |
| f. | Their poor work attitudes | NB | SA | A | D | SD |
| g. | Their unrealistic expectations compared to actual abilities | NB | SA | A | D | SD |
| h. | Unwillingness on the part of parents or guardians to admit that the individual is handicapped | NB | SA | A | D | SD |
| i. | Fear on the part of over-protective parents | NB | SA | A | D | SD |
| j. | Employers' negative reactions | NB | SA | A | D | SD |
| k. | Teachers' negative reactions | NB | SA | A | D | SD |
| l. | Students' negative reactions | NB | SA | A | D | SD |
| m. | A lack of public awareness about the needs and capabilities of handicapped persons | NB | SA | A | D | SD |
| n. | The attitude that government support is better than working for low wages | NB | SA | A | D | SD |
| o. | Dependency on others created by institutions | NB | SA | A | D | SD |
| p. | Union opposition to the hiring of handicapped persons | NB | SA | A | D | SD |
| q. | Teacher fear that not enough time is available to adequately serve handicapped students | NB | SA | A | D | SD |
| r. | Teacher fear of watering down courses for handicapped students | NB | SA | A | D | SD |
| s. | Teacher fear that non-handicapped students would be neglected | NB | SA | A | D | SD |

**2. ACCESSIBILITY BARRIERS: Handicapped Students are Prevented From Enrolling In Vocational Programs Because:**

| | | | | | |
|---|---|---|---|---|---|
| a. Transportation to and from school is lacking | NB | SA | A | D | SD |
| b. Physical facilities are not adequately equipped for persons with certain disabilities ..... | NB | SA | A | D | SD |
| c. Work area is not modified to compensate for handicapping conditions ..... | NB | SA | A | D | SD |
| e. Movement within school buildings is difficult ..... | NB | SA | A | D | SD |
| f. They lack basic living skills ..... | NB | SA | A | D | SD |
| g. Adequate course modification is lacking ... | NB | SA | A | D | SD |
| h. State guidelines place restrictions on program admission ..... | NB | SA | A | D | SD |

**3. EMPLOYMENT BARRIERS: Handicapped Students are Prevented From Obtaining Jobs Due To:**

| | | | | | |
|---|---|---|---|---|---|
| a. Their inaccurate knowledge of job market . | NB | SA | A | D | SD |
| b. Their unrealistic vocational objective ..... | NB | SA | A | D | SD |
| c. Limited number of available jobs ..... | NB | SA | A | D | SD |
| d. Exclusion from jobs by virture of their disability ..... | NB | SA | A | D | SD |
| e. The economics involved in hiring handicapped persons ..... | NB | SA | A | D | SD |
| f. Exclusion from employment by employers . | NB | SA | A | D | SD |
| g. Their lack of job seeking skills ..... | NB | SA | A | D | SD |
| h. Their persistent grooming problems ..... | NB | SA | A | D | SD |
| i. Geographic location of job ..... | NB | SA | A | D | SD |
| j. Their lack of motivation to persist on the job | NB | SA | A | D | SD |
| k. Employers' negative attitude ..... | NB | SA | A | D | SD |
| l. Co-workers' negative attitude ..... | NB | SA | A | D | SD |
| m. Their lack of means to upgrade skills ..... | NB | SA | A | D | SD |
| n. A lack of appropriate training courses ..... | NB | SA | A | D | SD |
| o. Their loss of employment because of low productivity ..... | NB | SA | A | D | SD |
| p. Their inability to improve skills ..... | NB | SA | A | D | SD |
| q. Exhorbitant insurance premiums levied against employers ..... | NB | SA | A | D | SD |

**4. LEGAL BARRIERS: Handicapped Students Are Prevented From Enrolling in Vocational Programs Because Of:**

| | | | | | |
|---|---|---|---|---|---|
| a. Laws governing eligibility for agency services ..... | NB | SA | A | D | SD |
| b. Laws governing eligibility for support payments ..... | NB | SA | A | D | SD |
| c. Laws governing employer obligation to hire handicapped persons ..... | NB | SA | A | D | SD |
| d. Difficulties experienced by agencies in clarifying jurisdiction in their services to handicapped persons ..... | NB | SA | A | D | SD |
| e. A lack of law enforcement in discrimination cases ..... | NB | SA | A | D | SD |
| f. A lack of legal mandate for education and training of handicapped persons in post-secondary schools ..... | NB | SA | A | D | SD |

**5. ORGANIZED GROUP BARRIERS: Handicapped Students Are Prevented From Enrolling In Vocational Programs Because Of:**

| | | | | | |
|---|---|---|---|---|---|
| a. Interagency competition for clients ..... | NB | SA | A | D | SD |
| b. Complex procedures involved in getting state and federal funds ..... | NB | SA | A | D | SD |
| c. VTAE schools lack of commitment to provide services for handicapped persons ..... | NB | SA | A | D | SD |
| d. Failure of VTAE schools to publicize their services to handicapped persons ..... | NB | SA | A | D | SD |
| e. Refusal by unions to allow handicapped persons to become members ..... | NB | SA | A | D | SD |
| f. A lack of advocate groups for handicapped persons within the VTAE system ..... | NB | SA | A | D | SD |

**6. PROFESSIONAL PREPARATION BARRIERS: Handicapped Students Are Prevented From Enrolling in Vocational Programs Because Of:**

| | | | | | |
|---|---|---|---|---|---|
| a. Insufficient in-service training methods of teaching handicapped students ..... | NB | SA | A | D | SD |
| b. An absence of relevant course offerings through university extension ..... | NB | SA | A | D | SD |
| c. Failure to provide incentive for those wanting to pursue courses on the teaching of handicapped persons ..... | NB | SA | A | D | SD |
| d. Failure by higher education institutions to develop courses for teaching adult handicapped persons ..... | NB | SA | A | D | SD |
| e. A lack of trained support personnel to assist teachers of handicapped persons ..... | NB | SA | A | D | SD |
| f. A lack of appropriate certification requirements for teaching adult handicapped persons ..... | NB | SA | A | D | SD |

**7. RESOURCE BARRIERS: Handicapped Students Are Prevented From Enrolling In Vocational Programs Due To:**

| | | | | | |
|---|---|---|---|---|---|
| a. The level of difficulty of audio-visual materials on the market ..... | NB | SA | A | D | SD |
| b. The level of difficulty of printed materials on the market ..... | NB | SA | A | D | SD |
| c. A lack of information on teaching materials available for handicapped persons ..... | NB | SA | A | D | SD |
| d. A lack of finances to acquire materials for teaching handicapped persons ..... | NB | SA | A | D | SD |
| e. Inadequate sharing and dissemination of teaching materials ..... | NB | SA | A | D | SD |
| f. A lack of supportive services ..... | NB | SA | A | D | SD |
| g. A lack of course materials in multiple modes | NB | SA | A | D | SD |
| h. A lack of appropriately trained personnel .. | NB | SA | A | D | SD |

# TEACHER COMPETENCY SURVEY

by Eric Rice and Rose Etheridge

*Program Model in New Careers for Handicapped Children and Youth (Communication and Media Cluster).* Chapel Hill, N.C.: System Sciences, Inc.; Washington, D.C.: U.S. Office of Education, 1977.

School _____ Grade Level _____

**Instructions:**
Please circle the number along the continuum that best describes your knowledge of and your skills in each of the areas listed below.
Please * the five areas which you consider the most important in teaching.
Please ✓ the five areas in which you would like to receive some in-service assistance. Do this for each of the major headings.

**A. Curricular Concerns**

| *Item* | | *Poor* | *Fair* | *Good* | *Excellent* |
|---|---|---|---|---|---|
| 1. Preparing instructional objectives | Knowledge | 1 | 2 | 3 | 4 |
| | Skill | 1 | 2 | 3 | 4 |
| 2. Individualized instruction | Knowledge | 1 | 2 | 3 | 4 |
| | Skill | 1 | 2 | 3 | 4 |
| 3. Personalized instruction | Knowledge | 1 | 2 | 3 | 4 |
| | Skill | 1 | 2 | 3 | 4 |
| 4. Preparing instructional materials | Knowledge | 1 | 2 | 3 | 4 |
| | Skill | 1 | 2 | 3 | 4 |
| 5. Creating alternative learning situations | Knowledge | 1 | 2 | 3 | 4 |
| | Skill | 1 | 2 | 3 | 4 |
| 6. Teaching problem-solving techniques | Knowledge | 1 | 2 | 3 | 4 |
| | Skill | 1 | 2 | 3 | 4 |
| 7. Concept teaching | Knowledge | 1 | 2 | 3 | 4 |
| | Skill | 1 | 2 | 3 | 4 |
| 8. Simulation techniques | Knowledge | 1 | 2 | 3 | 4 |
| | Skill | 1 | 2 | 3 | 4 |
| 9. Facilitating peer teaching | Knowledge | 1 | 2 | 3 | 4 |
| | Skill | 1 | 2 | 3 | 4 |
| 10. Teaching decision-making skills | Knowledge | 1 | 2 | 3 | 4 |
| | Skill | 1 | 2 | 3 | 4 |
| 11. Preparing instruction in social skills | Knowledge | 1 | 2 | 3 | 4 |
| | Skill | 1 | 2 | 3 | 4 |
| 12. Preparing instructional media | Knowledge | 1 | 2 | 3 | 4 |
| | Skill | 1 | 2 | 3 | 4 |
| 13. Using instructional media | Knowledge | 1 | 2 | 3 | 4 |
| | Skill | 1 | 2 | 3 | 4 |
| 14. Using illustrations to convey ideas | Knowledge | 1 | 2 | 3 | 4 |
| | Skill | 1 | 2 | 3 | 4 |
| 15. Team teaching | Knowledge | 1 | 2 | 3 | 4 |
| | Skill | 1 | 2 | 3 | 4 |
| 16. Knowledge of professional teaching specialty | Knowledge | 1 | 2 | 3 | 4 |
| | Skill | 1 | 2 | 3 | 4 |
| 17. Task analysis | Knowledge | 1 | 2 | 3 | 4 |
| | Skill | 1 | 2 | 3 | 4 |
| 18. Carefully planned classroom organization | Knowledge | 1 | 2 | 3 | 4 |
| | Skill | 1 | 2 | 3 | 4 |

| Item | | Poor | Fair | Good | Excellent |
|---|---|---|---|---|---|
| 19. Wide-ranging classroom management skills | Knowledge | 1 | 2 | 3 | 4 |
| | Skill | 1 | 2 | 3 | 4 |
| 20. Even, reasonable discipline | Knowledge | 1 | 2 | 3 | 4 |
| | Skill | 1 | 2 | 3 | 4 |
| 21. Conveying achievement expectations | Knowledge | 1 | 2 | 3 | 4 |
| | Skill | 1 | 2 | 3 | 4 |
| 22. Preparing criterion-referenced measures | Knowledge | 1 | 2 | 3 | 4 |
| | Skill | 1 | 2 | 3 | 4 |
| 23. Grading students | Knowledge | 1 | 2 | 3 | 4 |
| | Skill | 1 | 2 | 3 | 4 |
| 24. Developing evaluative instruments (test construction) | Knowledge | 1 | 2 | 3 | 4 |
| | Skill | 1 | 2 | 3 | 4 |
| 25. Selecting standardized tests | Knowledge | 1 | 2 | 3 | 4 |
| | Skill | 1 | 2 | 3 | 4 |
| 26. Using some means to secure feedback on teaching | Knowledge | 1 | 2 | 3 | 4 |
| | Skill | 1 | 2 | 3 | 4 |
| 27. Helping students develop positive self-concepts | Knowledge | 1 | 2 | 3 | 4 |
| | Skill | 1 | 2 | 3 | 4 |
| 28. Utilizing community resources | Knowledge | 1 | 2 | 3 | 4 |
| | Skill | 1 | 2 | 3 | 4 |
| 29. Arranging and conducting field trips | Knowledge | 1 | 2 | 3 | 4 |
| | Skill | 1 | 2 | 3 | 4 |
| 30. Knowledge of counseling techniques and how to apply them | Knowledge | 1 | 2 | 3 | 4 |
| | Skill | 1 | 2 | 3 | 4 |
| 31. Applying learning theories in teaching | Knowledge | 1 | 2 | 3 | 4 |
| | Skill | 1 | 2 | 3 | 4 |
| 32. Using and applying available research | Knowledge | 1 | 2 | 3 | 4 |
| | Skill | 1 | 2 | 3 | 4 |
| 33. The influence of teacher characteristics on students | Knowledge | 1 | 2 | 3 | 4 |
| | Skill | 1 | 2 | 3 | 4 |
| 34. Using criticism appropriately | Knowledge | 1 | 2 | 3 | 4 |
| | Skill | 1 | 2 | 3 | 4 |
| 35. Incorporating student opinions/ideas | Knowledge | 1 | 2 | 3 | 4 |
| | Skill | 1 | 2 | 3 | 4 |
| 36. Communicating easily | Knowledge | 1 | 2 | 3 | 4 |
| | Skill | 1 | 2 | 3 | 4 |
| 37. Listening carefully to students | Knowledge | 1 | 2 | 3 | 4 |
| | Skill | 1 | 2 | 3 | 4 |

**B. Handicapped Student Needs**

Please circle the number along the continum that best describes your knowledge of and your skills in each of the areas listed below:

| Item | | Poor | Fair | Good | Excellent |
|---|---|---|---|---|---|
| 1. Teaching strategies for exceptional children | Knowledge | 1 | 2 | 3 | 4 |
| | Skill | 1 | 2 | 3 | 4 |
| 2. Knowledge of the needs of exceptional children | Knowledge | 1 | 2 | 3 | 4 |
| | Skill | 1 | 2 | 3 | 4 |

| Item | | Poor | Fair | Good | Excellent |
|---|---|---|---|---|---|
| 3. Existing community programs for exceptional children | Knowledge | 1 | 2 | 3 | 4 |
| | Skill | 1 | 2 | 3 | 4 |
| 4. Psychological characteristics of exceptional children | Knowledge | 1 | 2 | 3 | 4 |
| | Skill | 1 | 2 | 3 | 4 |
| 5. Physical characteristics of exceptional children | Knowledge | 1 | 2 | 3 | 4 |
| | Skill | 1 | 2 | 3 | 4 |
| 6. Sociological characteristics of exceptional children | Knowledge | 1 | 2 | 3 | 4 |
| | Skill | 1 | 2 | 3 | 4 |
| 7. Devising educational programs for exceptional children | Knowledge | 1 | 2 | 3 | 4 |
| | Skill | 1 | 2 | 3 | 4 |
| based on their needs, abilities and interests | Knowledge | 1 | 2 | 3 | 4 |
| | Skill | 1 | 2 | 3 | 4 |
| 8. Motivating students | Knowledge | 1 | 2 | 3 | 4 |
| | Skill | 1 | 2 | 3 | 4 |
| 9. Establishing a favorable learning environment for exceptional children | Knowledge | 1 | 2 | 3 | 4 |
| | Skill | 1 | 2 | 3 | 4 |
| 10. Philosophies of teaching exceptional children | Knowledge | 1 | 2 | 3 | 4 |
| | Skill | 1 | 2 | 3 | 4 |
| 11. Using and locating supplementary resources | Knowledge | 1 | 2 | 3 | 4 |
| | Skill | 1 | 2 | 3 | 4 |
| 12. Setting realistic goals for exceptional children | Knowledge | 1 | 2 | 3 | 4 |
| | Skill | 1 | 2 | 3 | 4 |
| 13. Diagnosing learning problems | Knowledge | 1 | 2 | 3 | 4 |
| | Skill | 1 | 2 | 3 | 4 |
| 14. Devising learning activities for exceptional children | Knowledge | 1 | 2 | 3 | 4 |
| | Skill | 1 | 2 | 3 | 4 |
| 15. Providing prescriptive instruction for exceptional children | Knowledge | 1 | 2 | 3 | 4 |
| | Skill | 1 | 2 | 3 | 4 |
| 16. Communicating with exceptional children (verbal & non-verbal) | Knowledge | 1 | 2 | 3 | 4 |
| | Skill | 1 | 2 | 3 | 4 |
| 17. Dealing with emotional problems in the classroom | Knowledge | 1 | 2 | 3 | 4 |
| | Skill | 1 | 2 | 3 | 4 |
| 18. Behavior management techniques | Knowledge | 1 | 2 | 3 | 4 |
| | Skill | 1 | 2 | 3 | 4 |
| 19. Use of test results | Knowledge | 1 | 2 | 3 | 4 |
| | Skill | 1 | 2 | 3 | 4 |
| 20. Knowledge of state and federal programs for exceptional children | Knowledge | 1 | 2 | 3 | 4 |
| | Skill | 1 | 2 | 3 | 4 |
| 21. Working with parents | Knowledge | 1 | 2 | 3 | 4 |
| | Skill | 1 | 2 | 3 | 4 |
| 22. Use of teacher aides | Knowledge | 1 | 2 | 3 | 4 |
| | Skill | 1 | 2 | 3 | 4 |

# M-SCALE

by James H. Hughes

*Mainstreaming the Handicapped in Preparatory Occupational Education Programs in North Carolina.* Chapel Hill, N.C.: System Sciences, Inc., 1978.

**Instructions:**

Given below are 39 statements on ideas and problems about occupational education for handicapped students. We all think differently about such matters, and this scale is an attempt to let you express your beliefs and opinions. Respond to each of the items as follows:

1: disagree strongly
2: disagree moderately
3: disagree mildly
4: agree mildly
5: agree moderately
6: agree strongly

For example, if you *agree strongly* with a statement, you would circle the number 6 opposite the statement on the right hand side of the page. If you should happen to *disagree moderately* with it, you would circle the number 2. *Respond to each statement as best you can.* Go rapidly but carefully. Do not spend too much time on any one statement. Respond as best you can and then go on.

| | | | | | | |
|---|---|---|---|---|---|---|
| 1. In order to meet the needs of the handicapped student, class size will have to be reduced..... | 1 | 2 | 3 | 4 | 5 | 6 |
| 2. The handicapped student would be better served in separate programs..... | 1 | 2 | 3 | 4 | 5 | 6 |
| 3. Handicapped students should not be allowed to use occupationally-related machinery because it presents a hazard to them..... | 1 | 2 | 3 | 4 | 5 | 6 |
| 4. Smaller school systems do not have sufficient resources to offer the variety of options necessary to provide a flexible, individual occupational program for the handicapped student..... | 1 | 2 | 3 | 4 | 5 | 6 |
| 5. Personnel must be made available to help in diagnosing special needs of handicapped students..... | 1 | 2 | 3 | 4 | 5 | 6 |
| 6. Employers in business and industry are reluctant to hire handicapped students who have completed an occupational skill training program..... | 1 | 2 | 3 | 4 | 5 | 6 |
| 7. Handicapped students need a special setting where they can experience success and develop a marketable skill..... | 1 | 2 | 3 | 4 | 5 | 6 |
| 8. In-service education is necessary for all school personnel to understand legislation pertaining to the handicapped..... | 1 | 2 | 3 | 4 | 5 | 6 |
| 9. Handicapped students, when placed in a regular classroom, will develop positive attitudes toward themselves, others, work and learning..... | 1 | 2 | 3 | 4 | 5 | 6 |
| 10. Occupational training equipment must be modified to accommodate the handicapped student..... | 1 | 2 | 3 | 4 | 5 | 6 |
| 11. Occupational education teachers are qualified to plan individualized programs for handicapped students..... | 1 | 2 | 3 | 4 | 5 | 6 |
| 12. School personnel concerned with placement of handicapped students in occupational classes should attend in-service workshops on occupational education..... | 1 | 2 | 3 | 4 | 5 | 6 |
| 13. Labeling of students as handicapped often leads to segregating them in groups..... | 1 | 2 | 3 | 4 | 5 | 6 |
| 14. Most occupational teachers are inadequately prepared to handle the education of the handicapped student in their classes..... | 1 | 2 | 3 | 4 | 5 | 6 |

15. Not enough support personnel (aides, tutors, etc.) are available to help teachers provide occupational instruction to handicapped students.....1 2 3 4 5 6
16. Occupational teachers are generally not aware of employment opportunities availabled for handicapped students with occupational skills.....1 2 3 4 5 6
17. Generally, handicapped students are not prepared to succeed in a regular occupational skill training program.....1 2 3 4 5 6
18. Most community employers are willing to accept handicapped students for placement in cooperative education programs.....1 2 3 4 5 6
19. With the mainstreaming of handicapped students, an unfair amount of time will be spent tending to the needs of only a few students.....1 2 3 4 5 6
20. School facilities (classrooms, shops, labs) are not easily accessible to the handicapped.....1 2 3 4 5 6
21. Cooperative education programs have more potential for effectively serving handicapped students than do regular occupational programs.....1 2 3 4 5 6
22. Existing program guidelines and reporting requirements tend to encourage special occupational programs for handicapped students.....1 2 3 4 5 6
23. In-service education for teachers and other school personnel can change attitudes toward the handicapped.....1 2 3 4 5 6
24. Federal and State program guidelines restrict local flexibility in using funds to meet local needs.....1 2 3 4 5 6
25. There is not enough supportive evidence that mainstreaming is an educationally sound practice.....1 2 3 4 5 6
26. Parents of handicapped students need to become more knowledgeable of occupational education programs for their children.....1 2 3 4 5 6
27. School personnel (principals, counselors) should attend in-service workshops concerned with occupational education, its programs, goals, and objectives.....1 2 3 4 5 6
28. Occupational teachers do not have the time to perform tasks (such as developing individual instructional programs) necessary to work with handicapped students.....1 2 3 4 5 6
29. Special instructional materials must be available to teachers with handicapped students in the classroom, e.g., Braille readers, reading materials at simplified levels, etc.....1 2 3 4 5 6
30. Handicapped students need to attend classes with regular students and be accepted by their peers.....1 2 3 4 5 6
31. For handicapped students, a curriculum should be developed which relates basic skills and daily living skills to vocational opportunities.....1 2 3 4 5 6
32. Transportation services are essential for handicapped students if they are to participate in cooperative education programs.....1 2 3 4 5 6
33. Different teaching methods must be employed before the handicapped can be successfully integrated into regular classrooms.....1 2 3 4 5 6
34. Existing facilities can be modified to serve handicapped students with minimum cost.....1 2 3 4 5 6
35. Special curricular materials are necessary before the educational needs of the handicapped can be effectively met.....1 2 3 4 5 6

36. Allocating State occupational funds without requiring local matching would improve programs for handicapped students.....1 2 3 4 5 6

37. Occupational programs are too difficult for handicapped students.....1 2 3 4 5 6

38. In order for the handicapped student to be served in regular occupational programs, attitudes of teachers toward the handicapped must be changed.....1 2 3 4 5 6

39. School systems do not have sufficient funds to purchase necessary equipment or materials to facilitate the individual needs of the handicapped student.....1 2 3 4 5 6

# ATTITUDES TOWARD HANDICAPPED INDIVIDUALS ATHI SCALE

by A.L. Lazar and R.B. Stodden

A study of the ATHI and ATDP Scale. *DOPHHH Journal*, 1977, 3:6-9.

**Instructions:**

Mark each statement in the left margin according to how much you agree or disagree with it. *Please mark every one.* Write +3, +2, +1; or -3, -2, -1 depending on how you feel in each case.

| | |
|---|---|
| +3: I agree very much | -3: I disagree very much |
| +2: I agree pretty much | -2: I disagree pretty much |
| +1: I agree a little | -1: I disagree a little |

---

___ 1. Parents of handicapped children should be less strict than other parents.
___ 2. Handicapped persons are just as intelligent as non-handicapped ones.
___ 3. Handicapped people are usually easier to get along with than other people.
___ 4. Most handicapped people feel sorry for themselves.
___ 5. Handicapped people are the same as anyone else.
___ 6. There shouldn't be special schools for handicapped children.
___ 7. It would be best for handicapped persons to live and work in special communities.
___ 8. It is up to the government to take care of handicapped persons.
___ 9. Most handicapped people worry a great deal.
___ 10. Handicapped people should not be expected to meet the same standards as non-handicapped.
___ 11. Handicapped people are as happy as non-handicapped ones.
___ 12. Severely handicapped people are no harder to get along with than those with minor handicaps.
___ 13. It is almost impossible for a handicapped person to lead a normal life.
___ 14. You should not expect too much from handicapped people.
___ 15. Handicapped people tend to keep to themselves much of the time.
___ 16. Handicapped people are more easily upset than non-handicapped people.
___ 17. Handicapped persons cannot have a normal social life.
___ 18. Most handicapped people feel that they are not as good as other people.
___ 19. You have to be careful of what you say when you are with handicapped people.
___ 20. Handicapped people are often grouchy.

# SEMANTIC DIFFERENTIAL SCALES

by K. Casey

Semantic differential technique in the examination of teacher attitudes toward handicapped children. *Exceptional Child,* 1978, 25(1): 41-52.

**Instructions:**

Please rate _____ on each of the following scales. Mark the point along the line which best represents how you feel about the person(s) named above on the dimension given.

| | |
|---|---|
| Bad | Good |
| Beautiful | Ugly |
| Sour | Sweet |
| Outgoing | Withdrawn |
| Aggressive | Gentle |
| Independent | Dependent |
| Honest | Dishonest |
| Sad | Happy |
| Impolite | Polite |
| Unfriendly | Friendly |

This scale can be used by filling in any handicapped condition in the blank above, e.g., mentally handicapped, physically handicapped, and so on.

# POLICY AND PRACTICES SELF-EVALUATION FOR PRESCHOOL, ELEMENTARY AND SECONDARY, AND ADULT EDUCATION

*Section 504 Self-Evaluation Guide.* Washington, D.C.: Office for Civil Rights, 1978.

## FREE APPROPRIATE PUBLIC EDUCATION

### Appropriate Education

| | Yes | No |
|---|---|---|
| 1. Are all handicapped persons provided regular or special education and regulated aids and services that are designed to meet their individual needs as adequately as the needs of nonhandicapped persons are met? [Section 84.33(b)(1)(i)] | ☐ | ☐ |
| 2. Are all handicapped persons provided regular or special education and regulated aids and services that are based upon adherence to procedures that satisfy the requirements of: | | |
| a. Section 84.34? | ☐ | ☐ |
| b. Section 84.35? | ☐ | ☐ |
| c. Section 84.36? [Section 84.33(b)(1)(i)] | ☐ | ☐ |
| 3. If a handicapped person is placed in, or referred to, a program not operated by you,* have you maintained responsibility for ensuring that the requirements of Subpart D are met with respect to this handicapped person? [Section 84.33(b)(3)] | ☐ | ☐ |

### Free Education

| | Yes | No |
|---|---|---|
| 1. Are handicapped persons provided educational and related services without cost to themselves or their parents or guardian, except for those fees imposed on nonhandicapped persons or their parents or guardians? [Section 84.33(c)(1)] | ☐ | ☐ |
| 2. If handicapped persons are placed in programs not operated by you: | | |
| a. Is adequate transportation to and from any such program provided at no greater cost to the handicapped or their parents or guardians than that of transportation to and from a program which you operate? [Section 84.33(c)(2)] | ☐ | ☐ |
| b. If placement is in a public or private residential program: | | |
| • Is the program provided at no cost to handicapped persons or their parents or guardians? | ☐ | ☐ |
| • Is nonmedical care provided at no cost to handicapped persons or their parents or guardians? | ☐ | ☐ |
| • Is room and board provided at no cost to handicapped persons or their parents or guardians? [Section 84.33(c)(3)] | ☐ | ☐ |

### Date of Compliance

| | | |
|---|---|---|
| 1. Have the Section 84.33 requirements regarding the provision of a free appropriate public education, including the nonexclusion provision, been achieved by no later than September 1, 1978? [Section 84.33(d)] | ☐ | ☐ |

*The word "you" in this section refers to the recipient, that is, public and private educational institutions receiving Federal financial assistance.

**Location and Notification** | Yes | No

1. Are efforts being made annually to identify and locate every qualified handicapped person residing in the jurisdiction who is not receiving a public education? [Section 84.33(a)] ☐ ☐
2. Are appropriate steps being taken annually to notify handicapped persons and their parents or guardians of the recipient's duties under Subpart D? [Section 84.32(b)] ☐ ☐

## EDUCATIONAL SETTING

**Integrated Education** | Yes | No

1. Are handicapped persons furnished the opportunity to receive an education together with nonhandicapped persons to the maximum extent appropriate to the needs of those handicapped persons? [Section 84.34(a)] ☐ ☐

**Nonintegrated Setting** | Yes | No

1. If handicapped persons are placed in a setting other than the regular education environment:
   a. Has it been demonstrated that the education of those persons in the regular environment with the use of supplementary aids and services cannot be achieved satisfactorily? [Section 84.34(a)] ☐ ☐
   b. Is the proximity of the alternative setting to those persons' homes taken into account? [Section 84.34(a)] ☐ ☐
2. If you operate a facility identifiable as being for handicapped persons, have you ensured that the facility and services and activities provided there are comparable to other facilities, services, activities that you operate? [Section 84.34(c)] ☐ ☐

## NONACADEMIC SERVICES | Yes | No

1. In the provision of nonacademic and extracurricular services and activities:
   a. Are handicapped students provided these services in a manner that will afford them equal opportunity for participation? [Section 84.37(a)(1)] ☐ ☐
   b. Are handicapped students furnished the opportunity to participate with nonhandicapped persons to the maximum extent appropriate? ☐ ☐
2. Are personal, academic, or vocational counseling, guidance, and placement services provided to students without discrimination on the basis of handicap? [Section 84.34(b)] ☐ ☐
3. Are these services provided in such a way that handicapped students are not counseled toward more restrictive career objectives than nonhandicapped students with similar interests and abilities? [Section 84.37(b)] ☐ ☐
4. Are physical eduation courses, athletics, and similar programs and activities provided to students without discrimination? [Section 84.37(c)(1)] ☐ ☐

5. If separate or different physical education and athletic activities are offered to handicapped students than are offered to nonhandicapped students:
   a. Are handicapped students furnished the opportunity to participate in activities with nonhandicapped students to the maximum extent appropriate to the needs of these handicapped students? [Section 84.37(c)(2)] ☐ ☐
   b. Are handicapped students furnished the opportunity to compete for teams and participate in courses that are not separate or different? [Section 84.37(c)(2)] ☐ ☐

| EVALUATION AND PLACEMENT | Yes | No |
|---|---|---|
| 1. Are all tests and other evaluation materials validated for the specific purpose for which they are used? [Section 84.35(b)(1)] | ☐ | ☐ |
| 2. Are all tests and other evaluation materials administered: | | |
| a. By trained personnel? | ☐ | ☐ |
| b. In conformance with the instructions provided by their producer? | ☐ | ☐ |
| 3. Do tests and other evaluation materials include those tailored to assess specific areas of educational need and not merely those which are designed to provide a single general intelligence quotient? [Section 84.35(b)(2)] | ☐ | ☐ |
| 4. Are tests selected and administered so as best to ensure an accurate reflection of the student's aptitude or achievement level, or whatever other factor the test purports to measure, rather than any impaired sensory, manual, or speaking skills (except where those skills are the factors that the test purports to measure). [Section 84.35(b)(3)] | ☐ | ☐ |
| 5. For any person who, because of handicap, needs or is believed to need special education or related services, is an evaluation in accordance with the requirements described in Questions 1 through 4 above conducted before any action is taken with respect to the special education program and any subsequent significant change in placement? [Section 84.35(a)] | ☐ | ☐ |
| 6. In interpreting evaluation data and making placement decisions: | | |
| a. Have you drawn upon a variety of sources and types of information, including: | | |
| • Aptitude tests? | ☐ | ☐ |
| • Achievement tests? | ☐ | ☐ |
| • Teacher recommendations? | ☐ | ☐ |
| • Physical conditions? | ☐ | ☐ |
| • Social or cultural backgrounds? | ☐ | ☐ |
| • Adaptive behavior? [Section 84.35(c)(1)] | ☐ | ☐ |
| b. Does the group participating in placement decisions include persons who are knowledgeable: | | |
| • About the child? | ☐ | ☐ |
| • About the meaning of evaluation data? | ☐ | ☐ |
| • About the placement options? | ☐ | ☐ |

c. Are procedures established in treating information to ensure that:

- All information is documented? ☐ ☐
- All information is carefully considered? [Section 84.35(c)(2)] ☐ ☐

d. Is the placement decision made in conformity with [Section 84.35(c)(4)] ☐ ☐

7. Are periodic reevaluations in accordance with the requirements described in Questions 1 through 5 above conducted for students who have been provided special education and related services? [Section 84.35(d)] ☐ ☐

| PROCEDURAL SAFEGUARDS | Yes | No |
|---|---|---|
| 1. Are parents or guardians given prior notice of any action taken regarding identification, evaluation, or educational placement of their handicapped child or ward? (Section 84.36) | ☐ | ☐ |
| 2. Are all records relevant to the identification, evaluation or educational placement of a handicapped student made available to such student's parents or guardians? (Section 84.36) | ☐ | ☐ |
| 3. With regard to any action concering identification, evaluation, or educational placement, are parents or guardians of handicapped students furnished the opportunity: | | |
| a. To participate in an impartial hearing? | ☐ | ☐ |
| b. To be represented by counsel? | ☐ | ☐ |
| c. To have access to a review procedure? | ☐ | ☐ |

| PRESCHOOL AND ADULT EDUCATION PROGRAMS | Yes | No |
|---|---|---|
| 1. If the recipient operates a preschool education or day care program or activity: | | |
| a. Have procedures been established to prohibit the exclusion of qualified handicapped persons, on the basis of handicap, from the program activity? | ☐ | ☐ |
| b. In determining the aids, benefits, or services to be provided under the program or activity, have procedures been established for taking into account the needs of qualified handicapped persons? (Section 84.38) | ☐ | ☐ |

| PRIVATE EDUCATION PROGRAMS? | Yes | No |
|---|---|---|
| 1. For *all* recipients who operate private elementary and/or secondary programs: | | |
| a. Have procedures been established to ensure that qualified handicapped persons are not excluded if the person can, with minor program adjustments, be provided an appropriate education? | ☐ | ☐ |
| b. Have procedures been established to ensure that you do not charge more for providing an appropriate education to handicapped persons than is charged for educating nonhandicapped persons, except to the extent that any additional charge is justified by a substantial increase in cost for providing services to handicapped persons? [Section 84.39(b)] | ☐ | ☐ |

c. Have procedures been established to ensure compliance with the provisions of:

- Section 84.34? ☐ ☐
- Section 84.37? ☐ ☐
- Section 84.38? [Section 84.39(c)] ☐ ☐

1. For private elementary and secondary program recipients that operate special education programs: Have procedures been established also to ensure compliance with:

a. Section 84.35? ☐ ☐

b. Section 84.36? ☐ ☐

[Section 84.39(c)] ☐ ☐

# Architectural Accessibility Survey

Barrier Free Environments, Inc., Raleigh, N.C., 1980.

## CONTENTS


**Introduction and Instructions**

**Section 1. Site:**
- Requirements for Parking
- Requirements for Passenger Loading Zones
- Requirements for Transit Stops and Pedestrian Access
- Inventory
- Evaluation Form

**Section 2. Entrances:**
- Requirements
- Inventory
- Evaluation Form

**Section 3. Vertical Circulation:**
- Requirements for Elevators
- Requirements for Stairs
- Requirements for Ramps
- Requirements for Lifts
- Inventory
- Evaluation Form

**Section 4. Building Products:**
- Requirements for Telephones
- Requirements for Drinking Fountains
- Requirements for Alarms
- Inventory
- Evaluation Form

**Section 5. Functional Spaces:**
- Requirements
- Inventory
- Evaluation Form

**Section 6. Special Spaces:**
- Requirements for Toilet Rooms
- Requirements for Bathing Facilities
- Requirements for Assembly Areas
- Inventory
- Evaluation Form

**Survey A. Assessible Route:**
- Requirements
- Evaluation Form

**Survey B. Doors:**
- Requirements
- Evaluation Form

# Introduction and Instructions

## THE LAWS

Under the Architectural Barriers Act of 1968 (PL 90-480) and Section 504 of the Rehabilitation Act of 1973, all buildings owned or leased by the federal government must be accessible and all programs funded in whole or in part with federal money must be available to disabled people. These laws require minimal architectural accessibility in all buildings financed with federal money, and "program accessibility" for all federally funded programs.

Architectural accessibility means that mobility-, hearing-, or sight-impaired people can get to, enter, move around in, and safely use a building or facility.

Program accessibility means that a program or activity "when viewed in its entirety, is readily accessible to handicapped persons." (504 Regulations:84.22). Although program accessibility does not require structural modifications throughout a building, it does require that enough of the building be accessible so that all services and programs are available to disabled people.

## BARRIER IDENTIFICATION

The first step in achieving accessibility is to identify the existing barriers. A barrier is an external condition which prevents a person from doing something.

The most obvious barriers are structural, such as stairs or heavy doors, but negative attitudes and restrictive policies can be barriers, too. There are also communication barriers which may include such architectural features as difficult to see, non-tactile signs or exclusively audible warning systems.

This *Architectural Accessibility Survey* is directed primarily toward architectural barriers, but it includes some communication barriers as they relate to the use of the building and to program accessibility. The *Survey* is designed to collect data on existing conditions for the purpose of evaluating the extent of modifications which might be necessary for compliance with the accessibility laws.

## REQUIREMENTS

The requirements in this *Survey* are based on the American National Standards Institute A117.1 (1980) *Specifications for Making Buildings and Facilities Accessible to and Usable by Disabled People*. Since surveying buildings for complete compliance with ANSI would be impractical, only the most critical and basic issues have been selected for inclusion. The *Survey* tries to strike a balance between reasonable accommodation for disabled people, and the realities of dealing with inaccessible buildings.

## SURVEY CONTENT

There are eight parts to this survey. The first six numbered sections cover different parts of the site and building:

*Section 1. Site*—access to the building
*Section 2. Entrances*—entry into the building
*Section 3. Vertical Circulation*—movement between different levels in the building
*Section 4. Building Products*—use of some standard items, e.g., telephones
*Section 5. Functional Spaces*—use of rooms and spaces in the building
*Section 6. Special Spaces*—use of some standard spaces, e.g., toilet rooms

In addition to these six sections, which are organized to reflect a person's approach to and use of a building, there are two additional modules, which may apply to any or all or the six sections. These two modules are: *Survey A. Accessible Route* and *Survey B. Doors*. Accessible routes and doors may occur anywhere in a building. Therefore, they have been put in separate surveys where they can be used wherever necessary.

Since the idea of an accessible route may be new to you, and since it is central to the total structure of this survey, we will explain it in some detail before going on to d[illegible] briefly the other sections of the survey.

**Survey A. Accessible Route:** An accessible route is a smooth, wide, level path which connects any two site or building points. It has no abrupt changes in level such as stairs, and it is free from hazards. An accessible route allows disabled people to arrive at, enter, and circulate within a building or facility. Exterior accessible routes may include parking access aisles, curb ramps, walks, ramps, lifts, and clear floor space.

Accessible routes need to be provided:

1. between streets, sidewalks, driveways, public transportation stops, passenger loading zones, accessible parking spaces and accessible building entrances;
2. between accessible entrances of two buildings or facilities on the same site;
3. between the accessible building entrances and all accessible spaces within the building or facility;
4. within an accessible functional space, e.g., a classroom or an apartment.

Accessible routes are necessary to every site or building space or feature. Combining the requirements of the accessible route into one survey eliminates having to search for bits and pieces of information in other sections.

**Survey B. Doors:** Since doors are located at building entrances, along accessible routes, and in functional spaces and special spaces, they have been put in a separate survey which allows one to survey the doors as they occur.

**Section 1. Site** about getting to the building from the site, and about features on the site. It includes specifications for Parking Spaces and Passenger Loading Zones, and surveys the routes from these areas to the building as well as from Transit Stops, points of Pedestrian Access, and other buildings on the site.

**Section 2. Entrances** is concerned with getting into the building. A building entrance includes any steps, porches, terraces, etc. which are part of the building, the entrance door itself, and the route from the door to the reception area. The building entrance surveyed begins where the accessible route survey leading to it ended. The building entrance survey should continue into the main hall, lobby, reception area, or other primary building space, and may include several doors, vestibules, etc.

**Section 3. Vertical Circulation** applies to buildings with more than one level or floor. People who use wheelchairs may find it difficult to negotiate changes in level greater than 1/2", while steps and stairs are impossible. Small vertical changes in level may be modified by installing beveled thresholds, curb cuts, short ramps, warping the floor surface, grading etc., but changes in level of several steps or more require ramping, adding an elevator, or lift, bridging, etc., to provide accessibility. *Vertical Circulation* includes requirements for Elevators, Ramps, Lifts, and Stairs.

**Section 4. Building Products** includes items which are more or less permanently installed in the building and contribute to its functioning. The items covered here are Telephones, Drinking Fountains, and Alarms.

**Section 5. Functional Spaces** covers those areas within buildings that house the major activities for which the building or facility is intended. Classrooms, offices, libraries, dormatory rooms, dining halls, theaters, cafeterias, and lobbies are examples of functional spaces.

Because there are so many kinds of functional spaces, it would be impractical to have a separate section for each one. However, many features or activities recur in different kinds of spaces. This section covers many common features and activities and can be applied to many different spaces, and includes requirements for Work Surfaces, Controls, Storage, Signage, Sinks, and Other Equipment.

**Section 6. Special Spaces** describes spaces which have a specialized function and occur often enough in a building to warrant grouping their requirements in separate sections. The special spaces included here are Toilet Rooms, Bathing Facilities, and Assembly Areas.

## PURPOSE AND DESIGN

The purpose of this survey is to produce a concise listing of all existing barriers in the buildings and facilities surveyed, and to avoid filling out form after form with repetitive questions and amassing piles of paper through which one most sort to find a few answers.

Therefore, this survey has been designed to be as flexible and efficient as possible. There are basically two types of pages in it: there are pages which contain information, and there are pages to be filled out.

---

The information pages are marked with this symbol and may be cut out of this booklet, punched and fastened into a binder. They contain a **Needs** statement, the specific **Requirements** for that section, and **Survey Techniques** for assessing the degree of compliance with the requirements.

The **Needs** statement is a general description of what accommodations are needed by people with different types of disabilities.

The **Requirements** are a short statement of the minimum architectural specifications required for accessibility.

The **Survey Techniques** are an explanation of how to determine whether or not a site, building, space, or product complies.

---

The pages to be filled out are marked with this symbol and may also be cut out of this booklet. They are the *Inventory* and *Evaluation Forms*. Since it is impossible to anticipate how many copies of them will be needed for each survey, these pages will be used to make as many copies as are necessary for you to do the survey. **These pages are masters. Do not write on them.** You may want to put the copies in pocket pages in the binder.

The *Inventory* asks if a particular item or feature exists, and if so, does it need to be surveyed. If the answer is **Yes,** the *Inventory* directs you to the applicable set of **Requirements.** This step eliminates your having to fill out pages of forms about things that do not apply in your situation.

The *Evaluation Form* is the sheet on which you record the areas of non-compliance that you find in surveying the site and building. Each section has a separate *Evaluation Form;* often there will be several forms for one section. For example, *Section 5. Functional Spaces* will require many *Evaluation Forms*—one for each room or space surveyed. These forms will provide detailed information on those items which are not in compliance so that it will be possible to review all the problems in a single building at one time. Or, if you wanted to assess the condition of all building entrances or all toilet rooms throughout a campus, the *Evaluation Forms* for these sections could be brought together and studied.

## MATERIALS NEEDED

- Survey binder with requirements and extra copies of the *Inventory* and *Evaluation Forms*. **Do not use the masters to write on.**
- Clip board and pencils.
- Six foot steel tape measure; don't use a yard stick or other rigid tool since it is difficult to measure openings exactly.
- Another person to hold the tape or write answers will make the job easier.

## PROCEDURE

Fill out the name of the building and the date of the survey on all *Inventory* and *Evaluation Forms*.

*Look over the whole Survey* before beginning. Complete one section at a time, and do the first three in sequence as each section leads to the next.

As you work on each section, begin with the *Inventory*. After you have completed it, you will have an idea of how many *Evaluation Forms* you will need, and whether parts of other sections will be required.

Read the **Requirements** and **Survey Techniques** through before beginning to survey. This will give you the whole picture of what you will be looking for.

As you record inaccessible and non-complying items on the *Evaluation Form, be as specific as possible.* Use exact dimensions, precise locations and detailed descriptions of conditions. When you return to the *Evaluation Forms* to plan modifications, you will need as much accurate information as possible.

Keep completed *Inventories* and *Evaluation Forms for each building together.*

# 1. Site
## REQUIREMENTS FOR PARKING

### Need
Many disabled people drive their own cars or vans, and need parking spaces which are wide enough to open a car door fully and get out with a wheelchair or mobility aid, are close to the building or facility they are going to, and are on an accessible route from the parking space to the building or facility which it serves.

| Requirements for Parking | Survey Techniques |
|---|---|
| 1. at least two handicapped spaces a minimum of 96″ wide | 1. Measure the width of parking space. Note if it is less than 96″ wide. |
| 2. adjacent access aisle 60″ wide (may be shared with another 96″ wide parking space) | 2. Is there an access aisle adjacent to the parking spaces and on the same level? Measure its width and note if it is too narrow. |

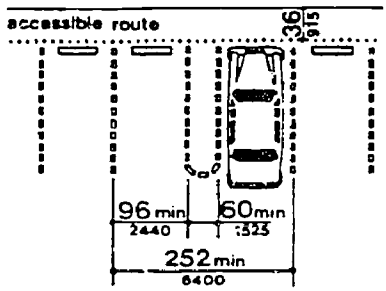


| | |
|---|---|
| 3. access aisle part of an accessible route that connects the parking spaces to a major building entrance | 3. The access aisle and the route from the parking spaces to a building must meet the requirements of an accessible route. Using *A. Accessible Route: Requirements* as a guide, survey the path or route from the level of the parking spaces to the beginning of a major building entrance. An entrance begins at the steps, ramp, porch, plaza, etc. which are part of a building. If there is more than one possible route, survey the one with the fewest steps or with the least vertical change in level. Be sure to note where you end the *Accessible Route Survey*, as *2. Entrances* will begin at this place. Attach the *Accessible Route Evaluation Form* to the *Site Evaluation Form*. |

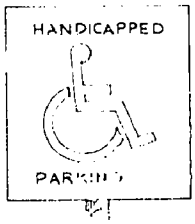



| | |
|---|---|
| 4. above ground sign displaying the international symbol of accessibility | 4. Is there a sign that can be seen when a car is parking in the space? |

# Site

## REQUIREMENTS FOR PASSENGER LOADING ZONES

1.

### Need

Disabled people, including those with mobility or visual impairments, who are being dropped off or picked up by car at a building need a wide, level, well-marked area protected from vehicular traffic. This area must be *adjacent* to the space the car pulls into, and must be connected to the building or facility by an accessible route.

| Requirements | Survey Techniques |
|---|---|
| 1. passenger loading zone at the same level as the street | 1. Look for abrupt changes in level such as curbs or steps. Note the number and height of any changes in level greater than 1/2". |
| 2. passenger loading zone at least 48" wide and 20' long | 2. Measure the length and width of the passenger loading zone. The long measurement is parallel to the vehicle pull-up space. Note the dimensions of the zone if they are less than those required. |
| 3. passenger loading zone connected to the building or facility by an accessible route | 3. Using *A. Accessible Route: Requirements* as a guide, survey the path or route from the level of the passenger loading zone to the building entrance. An entrance begins at the steps, ramp, porch, plaza, etc., which are part of the building. If there is more than one possible route, survey the one with the fewest steps or with the least vertical change in level. Attach the *Accessible Route Evaluation Form* to the *Site Evaluation Form*. |

# 1. Site

## REQUIREMENTS FOR TRANSIT STOPS & PEDESTRIAN ACCESS

### Need

Disabled people need to be able to get from transit stops and from streets or sidewalks to the buildings or facilities which they serve.

| Requirements for Transit Stops and Pedestrian Access | Survey Techniques |
|---|---|
| 1. transit stops connected to the building or facility by an accessible route | 1. Using *A. Accessible Route: Requirements* as a guide, survey the path or route from the level of the transit stop to the beginning of a major building entrance. An entrance begins at the steps, ramp, porch, plaza, etc., which are part of the building. If there is more than one possible route, survey the one with the fewest steps or with the least vertical change in level. Attach the *Accessible Route Evaluation Form* to the *Site Evaluation Form.* |
| 2. streets and sidewalks connected to the buildings that they serve by an accessible route | 2. Using *A. Accessible Route: Requirements* as a guide, survey the path or route from the street or sidewalk to the beginning of a major building entrance. An entrance begins at the steps, ramp, porch, plaza, etc., which are part of the building. If there is more than one accessible route, survey the one with the fewest steps or with the least vertical change in level. Attach the *Accessible Route Evaluation Form* to the *Site Evaluation Form.* |

# Site
## INVENTORY

1.

Date of Survey: _____ Name of Building: _____

| | Yes | No |
|---|---|---|
| 1. Is parking provided for the building? | ☐ | ☐ |
| If the answer is **Yes,** identify the parking area on the *Site Evaluation Form,* and survey it for compliance using *1. Site Requirements For Parking* as a guide. | | |
| 2. Is there a place for car passengers arriving at the building to be dropped off? | ☐ | ☐ |
| If the answer is **Yes,** identify the passenger loading zone on the *Site Evaluation Form* and survey it for compliance using *1. Site: Requirements for Passenger Loading Zones* as a guide. | | |
| 3. Are there any public transit stops such as bus stops, or subway exits and entrances which serve the building? | ☐ | ☐ |
| If the answer is **Yes,** identify the public transit stop on the *Site Evaluation Form* and survey it for compliance using *1. Site: Requirements for Public Transit Stops and Pedestrian Access.* | | |
| 4. Is the building served by public streets or sidewalks? | ☐ | ☐ |
| If the answer is **Yes,** identify the pedestrian access route on the *Site Evaluation Form* and survey it for compliance using *1. Site: Requirements for Public Transit Stops and Pedestrian Access.* | | |
| 5. Are there other accessible buildings or facilities on the same site? | ☐ | ☐ |
| If the answer is **Yes,** survey the routes between at least one accessible entrance to this building and the accessible entrances to all other buildings or facilities on the site. Use *A. Accessible Routes: Requirements* as a guide. Be sure to identify each route carefully on the *Accessible Route Evaluation Form* to avoid surveying the same route twice when other building site evaluations are done. Attach all *Accessible Route Evaluation Forms* to the *Site Evaluation Form.* | | |
| 6. Are public-use telephones provided on the site? | ☐ | ☐ |
| If the answer is **Yes,** identify the telephone on the *Site Evaluation Form* and survey it for compliance using *4. Building Products: Requirements For Telephones.* | | |
| 7. Are drinking fountains provided on the site? | ☐ | ☐ |
| If the answer is **Yes,** identify at least one drinking fountain on the *Site Evaluation Form* and survey it for compliance using *4. Building Products: Requirements for Drinking Fountains.* | | |
| 8. Are toilet facilities provided on the site? | ☐ | ☐ |
| If the answer is **Yes,** identify at least one toilet room on the *Site Evaluation form* and survey it for compliance using *6. Special Spaces: Requirements for Toilets.* | | |
| 9. Are places of assembly provided on the site? | ☐ | ☐ |
| If the answer is **Yes,** identify the places of assembly on the *Site Evaluation Form* and survey them for compliance using *6. Special Spaces: Requirements for Assembly Areas.* | | |

# Site
## EVALUATION FORM

1.

Date of Survey: _____ Name of Building: _____

**Item Identification and Location:** _____ **Accessible Route Evaluation Form Attached:** _____

**List of Deficiencies**

**Item Identification and Location:** _____ **Accessible Route Evaluation Form Attached:** _____

**List of Deficiencies**

# Entrances
## REQUIREMENTS

### Need

Mobility disabled people need a building entrance that provides a wide, smooth, level or ramped route connecting the site with the building interior. Entrance doors need to be wide, have adequate space for maneuvering on both the pull and push sides, and require light pressure and no twisting or fine movements to operate. The biggest problem at entrances is usually a change in level which requires steps or stairs. These barriers must be identified and corrected by grading, ramping, or adding a lift. Therefore, an accessible building entrance combines the requirements of an accessible route and accessible doors. In addition, since building entrances often involve steps or stairs or other changes in level such as terraces, porches, etc., the requirements for ramps or lifts may also apply.

| Requirements for Entrances | Survey Techniques |
|---|---|
| 1. accessible route from site to building interior | 1. Use *A. Accessible Route: Requirements* as a guide. Begin this survey where the accessible route leading to the entrance ended. See the copies of the *Accessible Route Evaluation Form* attached to the *Site Evaluation Form* for this information.<br>The entrance accessible route continues through the door and into the main hall, lobby, or reception area. Note any deficiencies in the accessible route on the *Entrances Evaluation Form.*<br>If a ramp or lift is used an at entrance, be sure to review it with the appropriate *Requirements* from 3. Vertical Circulation. Note any deficiencies on the *Entrances Evaluation Form.* |
| 2. accessible doors at entrance. | 2. Using *B. Doors: Requirements* as a guide, survey the entrance door. Note any deficiencies on the *Entrance Evaluation Form.*<br>If there is more than one door at the entrance, identify each and survey them separately. |
| 3. no revolving doors | 3. If any entrance door is a revolving door, is there an adjacent swing or sliding door? If so, complete the *Door Evaluation Form* for the swing door. If there is no other usable door at this entrance, note this on the *Entrances Evaluation Form.* |

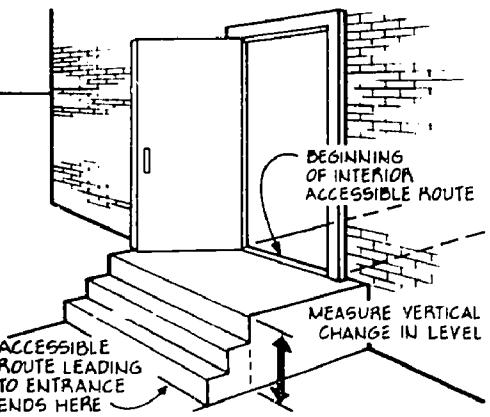

4. minimum of 6'-8" between doors in series.

a.

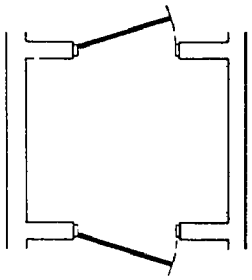

Both doors swing out (acceptable)

b.

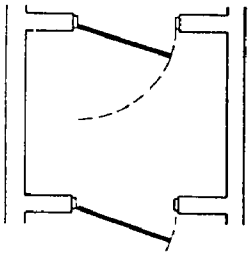

Both doors swing in the same direction (possible)

c.

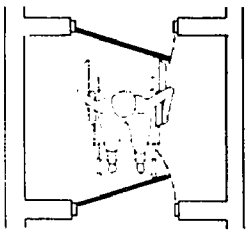

Both doors swing in (unacceptable)

4. If there are two doors in a row at the entrance, measure the distance between them when they are closed. If the distance is less than 6'-8", note the dimension on the *Entrance Evaluation Form* Which way do the doors swing? Look at the examples and note the direction of swing on the *Entrance Evaluation Form.*

# Entrances
## INVENTORY

2.

Date of Survey: _____ Name of Building: _____

1. How many primary entrances has the building? (A primary entrance leads to a hall, lobby, or other general circulation space. A secondary entrance leads to an occupied room or space such as a kitchen, loading area, service area, classroom, etc.)

   # of primary entrances _____

2. How many *different* entrances were identified in the Accessible Route Surveys used in *1. Site?*

   # of entrances _____

   List each one and identify it as primary or secondary.

| entrance | primary or secondary |
|---|---|
| _____ | _____ |
| _____ | _____ |
| _____ | _____ |
| _____ | _____ |
| _____ | _____ |
| _____ | _____ |

3. Using *2. Entrances: Requirements* as a guide, survey every primary entrance identified in question 1, and each secondary entrance identified in question 2. Complete an *Entrance Evaluation Form* for each entrance.

# Entrances
## EVALUATION FORM

Date of Survey: _____ Name of Building: _____

**Entrance Surveyed** _____

**List of Deficiencies**

**Entrance Surveyed** _____

**List of Deficiencies**

# Vertical Circulation

## REQUIREMENTS FOR ELEVATORS

3.

### Need

All disabled people benefit from a building which has elevators, but to be usable the elevators must provide adequate maneuvering space, time to get to and enter the cab, and conveniently located and marked controls. Blind people especially need elevators which audibly indicate direction of travel and floors passed or arrived at, and which have tactile markings at all controls. Hearing impaired people need all this information to be visual also.

### Requirements for Elevators

1. minimum interior cab dimensions 54" x 80" with center opening doors, or 54" x 68" with side opening doors

### Survey Techniques

1. Measure the inside of the elevator from wall to wall. Note the location of the door opening. Note the interior dimensions if they do not comply.

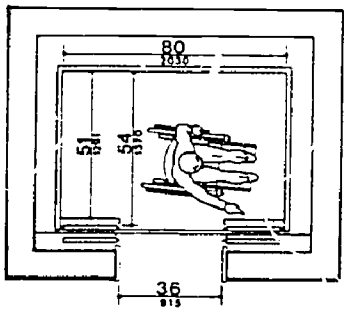


Center opening doors

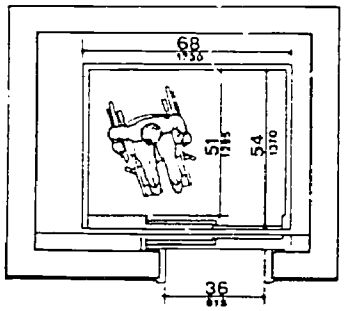


Side opening doors

Elevator depth may be 51" if elevator capacity is less than 2,000 pounds.

2. minimum door opening width 36" clear

2. Measure clear opening of elevator entrance. Note door dimension if it is less than 36".

3. doors equipped with automatic door reopening device

3. Stand in the doorway until the door begins to close. Do the doors reopen without hitting you? Do the doors reopen at all?

4. elevator cab self-leveling within 1/2"

4. When the elevator is stopped at a floor, is there a difference in level between the elevator floor and the building floor greater than 1/2"? Note the difference if it is greater than 1/2".

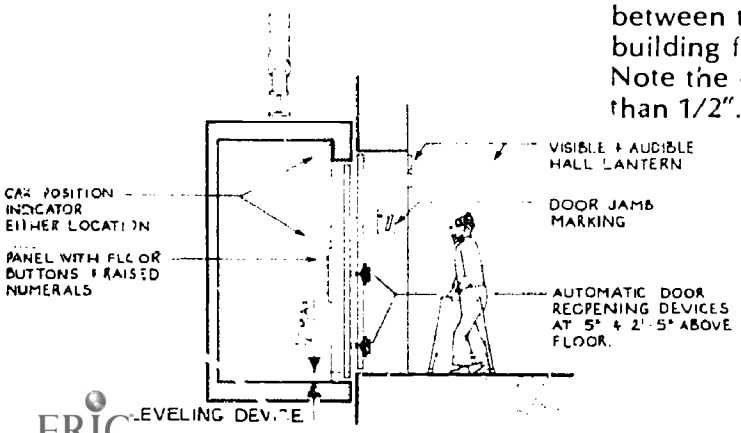

| Requirements for Elevators | Survey Techniques |
|---|---|
| 5. elevator cab control panel:<br>a) all buttons & controls no higher than 54"<br>b) emergency controls group at bottom no lower than 35"<br>c) all control buttons minimum 3/4" diameter<br>d) raised numbers, characters, or symbols to left of buttons and controls, 5/8"-2" high, raised 1/32" minimum | 5. Note the dimensions of any of the following which do not comply:<br>a) Measure from the floor to the top of the highest control or button.<br>b) Measure from the floor to the lowest control or button.<br>c) Measure across button.<br>d) Are they there and do they meet the required measurements? |

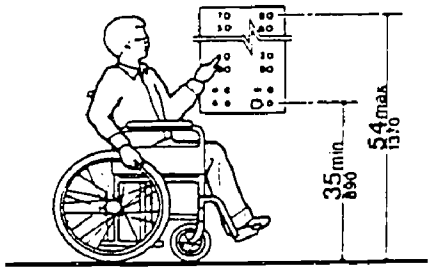


Control height

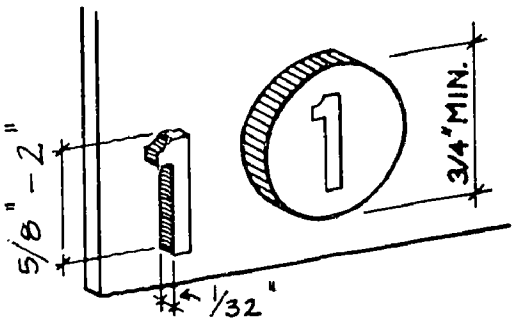


| | |
|---|---|
| 6. car position indicator in cab with lighted numerals 1/2" high, and audible signal. | 6. Run the elevator. As it passes each floor, does the floor number light up and is there an audible signal? Note any deficiencies. |

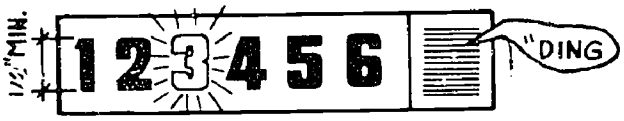


| | |
|---|---|
| 7. hall signals.<br>a) call buttons for elevator centered at 42" from the floor and 3/4" minimum diameter | 7. hall signals:<br>a) Measure height and diameter of buttons. Note dimensions that do not comply. |

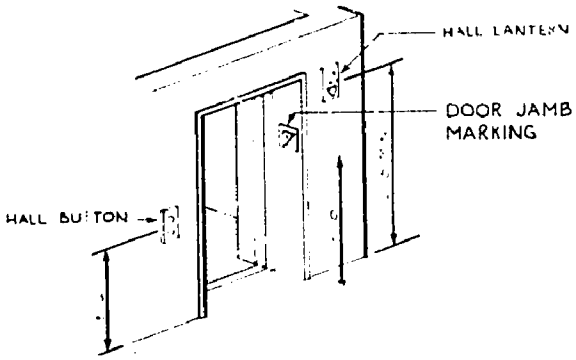


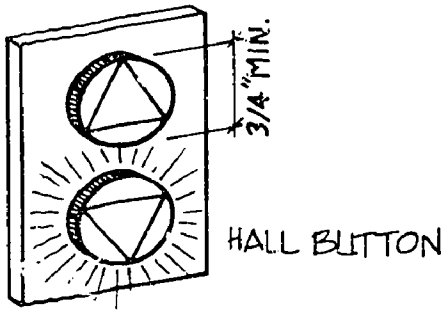

b) hall lantern with visible and audible signal to announce the arrival and direction of each car:

- visible signal mounted 72" minimum above floor, and at least 2-1/2" smallest dimension.
- audible signal once for up, twice for down

b) Call an elevator to the floor. As it arrives notice if the lantern signal is clear and visible. Is there an audible signal indicating the direction of travel? Measure the height of the hall lantern from the floor, and the size of its smallest side. Note any items which do not comply.

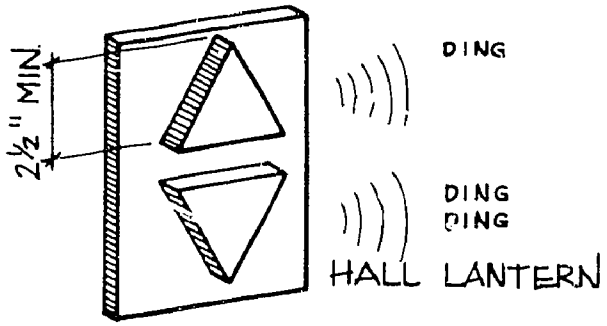


c) raised floor designations on each hoistway entrance mounted 60" above the floor, a minimum of 2" high, and raised 1/32" minimum

c) Are raised floor numbers provided at each elevator entrance? Note any deficiencies.

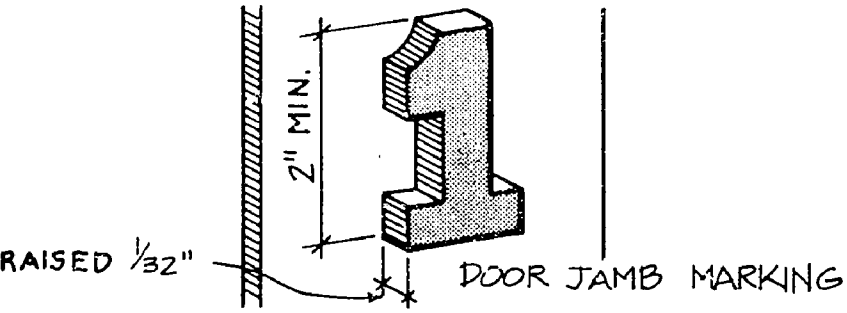

# 3.

# Vertical Circulation

## REQUIREMENTS FOR STAIRS

### Need

Although people who use wheelchairs cannot use stairs at all, there are many disabled people, including the elderly and visually impaired, who do. Stairs should have wide treads, rounded nosings which will not catch toes, and handrails with extensions for support and guidance.

### Requirements for Stairs

1. tread with a minimum of 11"

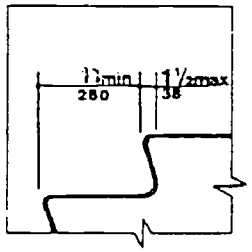


Acceptable Nosing

2. nosings not squared nor projecting abruptly

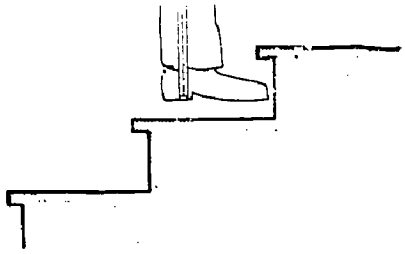

Unacceptable Nosing

3. handrails on both sides

4. handrails extending 12" beyond top riser and 12" plus one tread width beyond botton riser

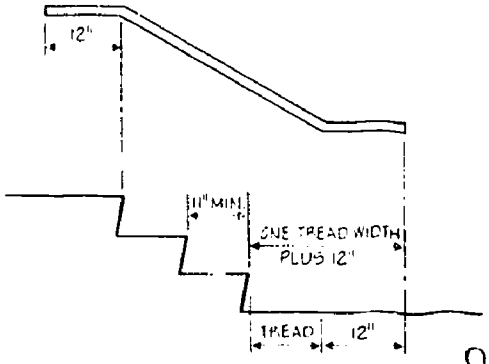


### Survey Techniques

1. Measure the tread from nosing to nosing. Note its width if it is less than 11".

2. Are the nosings at the edge of the tread rounded? Do they project more than 1-1/2"? Note nosings which do not comply.

3. Has the stair handrails on both sides?

4. Measure the width of a tread from nosing to nosing. Add 12". The extension at the botton of the stair beyond the last riser should equal this number. Note the length of the extension if it is less than required.

5. handrails no more than 1-1/2" from adjacent wall.

5. Measure the space between handrail and wall. Measure the handrail across the top. Note any dimensions which do not comply.

6. handrail should be round, 1-1/2" in diameter, or have a rounded or oval surface that can be grasped

6. Hold on to the handrail. Can you close your fingers around it? Note the configuration of a handrail which does not comply.

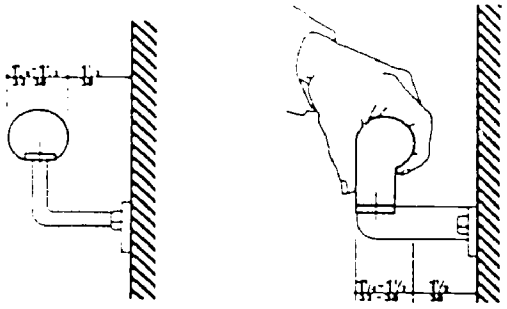

Acceptable Handrails

# 3.

# Vertical Circulation

## REQUIREMENTS FOR RAMPS

### Need

People in wheelchairs who use ramps need the ramps to be gently sloped, to have handrails,to be protected from drop offs, to have a smooth, stable surface, and to have level platforms top and bottom and along the way for resting and turning. Some ambulatory people find ramps difficult to walk on, so stairs should always be provided also.

### Requirements for Ramps

1. slope no greater than 1:12

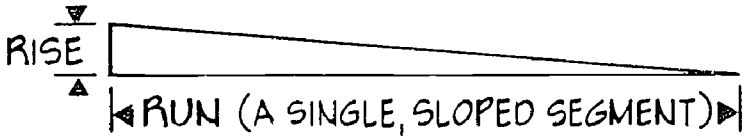


rise - vertical height from top to bottom

run = sloped segment of ramp

2. maximum length of ramp run for each slope

| | Slope | Max. Run |
|---|---|---|
| modifications only | 1:8 | 2' |
| | 1:10 | 5' |
| all new ramps | 1:12 | 30' |
| | 1:16 | 40' |
| | 1:20 | 50' |

3. minimum clear width of 36"

4. landings:
   a) level landings at least 5' long at top and bottom of ramp
   b) landings where ramps change direction at least 5' x 5'

### Survey Techniques

1. A slope of 1:12 (or 8.33%) means 1" of vertical rise for every 12" of run. This is a moderate slope. Measure the amount the ramp rises from one end to the other. Measure the length (run) of the ramp. Divide the rise by the run. If the answer is 8.33% or less, the ramp complies. If some segments of the ramp are steeper than others, check the rise and run of those segments and figure the percent. If the percent of the slope is greater than 8.33%, the ramp must be modified. Note any ramps or ramp segments that are too steep, and include the percent of slope.

2. Determine the slope of each ramp. Measure the run of the ramp to see if it exceeds the maximum length allowed for that slope. Note the length of any ramp segment that exceeds the maximum run.

3. Measure the width of the ramp along its entire length, and *inside* handrails, benches, etc., that may be placed along it. Note any places where the ramp is narrower than 36". Note the reason for the narrow width.

4. a) Measure the length of the landing. The width of the landing must be at least as wide as the ramp. Note any dimensions that do not comply.
   b) Measure landings where ramps change directions. Note any landings that do not comply.

5. handrails:
   a) handrails both sides of ramp extending 12" beyond top and bottom


1:12 max. slope

5. a) Are there continuous handrails on both sides of the ramp? Measure the distance they extend beyond the top of the ramp and the bottom of the ramp. Note the absence of handrails, and any handrails without extensions.

   b) handrails 1-1/4" to 1-1/2" in diameter with rounded or oval surface and no more than 1-1/2" from wall

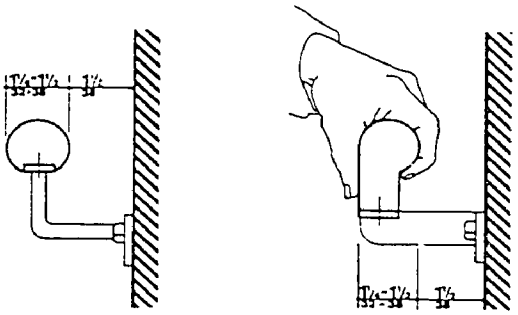

b) Measure the handrail across the top. Can you close your fingers around it? Measure the space between the handrail and the wall. Note any dimensions or configurations that do not comply.

6. drop-offs must be protected by curbs, railings, walls, etc.

6. If the ramp drops off on one or both sides, are the edges protected by curbs, railings, walls, etc., so that people, wheelchairs, crutches, etc., cannot slip off the edge? Note any unprotected drop-offs and their height.

# 3. Vertical Circulation

## REQUIREMENTS FOR LIFTS

### Need

Lifts are not acceptable in new construction, but they can be a successful solution to existing steps and stairs that cannot be ramped or otherwise modified. In addition to meeting state and local code requirements, lifts must meet requirements for clear floor space, floor surface, and controls.

### Requirements for Lifts

1. minimum clear floor space 30" x 48"

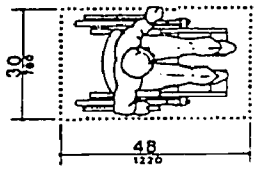


Clear Floor Space

2. no vertical change in level greater than 1/2"

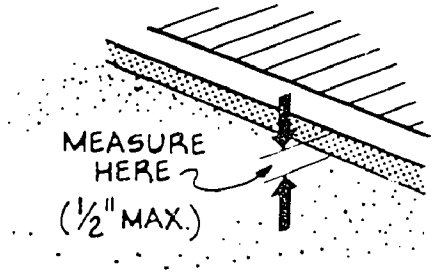


3. stable, firm, non-slip surface

4. no openings with *both* dimensions greater than 1/2"

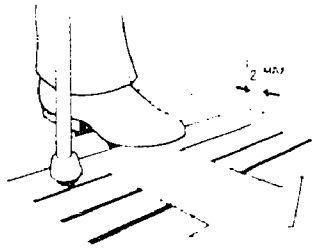

### Survey Techniques

1. Measure the interior of the lift with the door or gate closed. Note if the dimensions are less than the requirements.

2. Measure the change in level between the lift platform and the floor or ground surfaces at both the top and bottom of the lift. Note if the change in level is greater than 1/2".

3. Note if the platform surface is slippery, rough, soft, or otherwise unsuitable for wheelchairs or unstable ambulatory people.

4. Gratings in the surface of the platform must not have openings which measure more than 1/2" in *both* directions. A grating opening may be 1/2" or less in one dimension and any length in the other. However, the long dimension must run across (perpendicular to) the direction of travel. Check the platform surface for grates, drains, openings, or cracks and note those that do not comply.

5. controls and operating mechanisms no more than 48"-54" above the platform.

5. Lift controls mounted so that a forward reach is required must be no more than 48" above the platform. If a side reach is required, controls may be at 54". Note the height of controls that are too high.

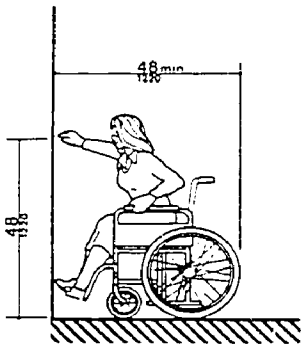


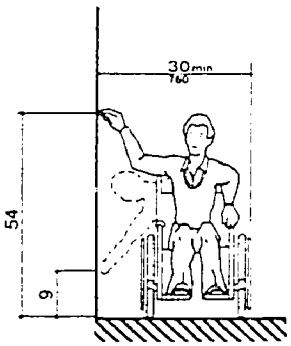


6. controls operable with one hand without tight grasping, pinching, or twisting.

6. Can the controls be operated by one hand with simple movements such as pushing or pulling? Describe any deficiencies.

# Vertical Circulation
## BUILDING INVENTORY

3.

Date of Survey: _____ Name of Building: _____

1. How many floors or levels has the building? # of levels
   If the answer is **one**, skip this section. _____

2. Answer the following questions on the chart below. This chart is to show the ways all levels of the building are connected. Each line represents a level. Each box represents the connection (stairs, elevators, etc.) between those levels. Label each line for every level in the building. Begin with the lowest and work up. Be sure to include: basements, garages, lobbies, mezzanines, each upper floor separately, balconies, porches, etc. Indicate which level is the ground floor level.
   connected by a ramp?

| | a. Primary Entrance Level | b. Accessible Entrance Level | c. Levels Connected By | | | |
|---|---|---|---|---|---|---|
| | | | Stair | Elevator | Ramp | Lift |
| | | | | | | |
| | | | | | | |
| | | | | | | |
| | | | | | | |
| | | | | | | |
| | | | | | | |

a. Check the level which is currently the primary entrance level.
b. Check the level which is or will be the accessible entrance level.
c. Check the boxes which show how each level is connected to adjacent levels. If more than one type of vertical circulation is available, check all the appropriate boxes.

| | Yes | No |
|---|---|---|
| 3. Is there an elevator in the building? | ☐ | ☐ |

If the answer is **No,** go to the next question.

If the answer is **Yes,** how many levels does it serve? Identify the elevator on the *Vertical Circulation Evaluation Form* and survey it for compliance using *3. Vertical Circulation: Requirements For Elevators* as a guide. # of levels _____

4. How many levels that are *not* connected by an elevator are connected by a ramp? # of levels
   If the answer is **None,** go to the next question.
   If the answer is **two or more,** (one ramp connects *two* levels), identify *each* ramp on the *Vertical Circulation Evaluation Form* and survey it for compliance using *3. Vertical Circulation: Requirements For Ramps.* _____

5. How many levels are not served by elevators? Identify the the stairs connecting these levels on the *Vertical Circulation Evaluation Form* and survey them for compliance using *3. Vertical Circulation: Requirements for Stairs* as a guide. # of levels _____.

6. How many levels are connected by a lift? # of levels
   If the answer is **two or more,** identify each lift on the *Vertical Circulation Evaluation Form* and survey it for compliance using *3. Vertical Circulation: Requirements For Lifts* as a guide. _____

# Vertical Circulation
## EVALUATION FORM

3b.

Date of Survey: _____ Name of Building: _____

Item Identification and Location: _____

Accessible Route Evaluation Form Attached: _____

List of Deficiencies

Item Identification and Location: _____

Accessible Route Evaluation Form Attached: _____

List of Deficiencies

# Building Products
## REQUIREMENTS FOR TELEPHONES

4.

### Need
People in wheelchairs need adequate clear floor space to pull up to the telephone, and a low mounting height so they can reach all operable parts. Hearing impaired people need volume controls.

| Requirements For Telephones | Survey Techniques |
|---|---|
| 1. connected to a primary entrance by an accessible route | 1. Are the telephones on an accessible route? If necessary, survey the route from a primary accessible entrance to the telephones. If the route is *not* fully accessible, note the deficiencies on an *Accessible Route Evaluation Form* and attach it to the *Special Spaces Evaluation Form.* |
| 2. minimum 30" x 48" clear floor space allowing either front or parallel approach | 2. Measure the floor in front of the phone. Note the dimensions of the clear floor space if it is less than required. |
| 3. front approach: highest operable part 54" maximum from floor. parallel approach: highest operable part 54" maximum from floor. | 3. Determine if approach is front or parallel. Measure from the floor to the highest operable part of the telephone. Note if the distance exceeds the requirement. |

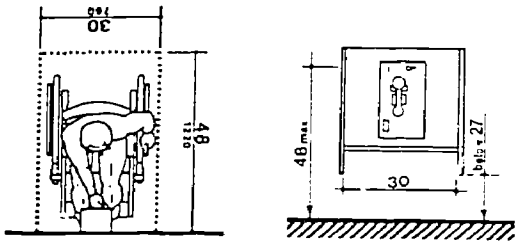


Front Approach

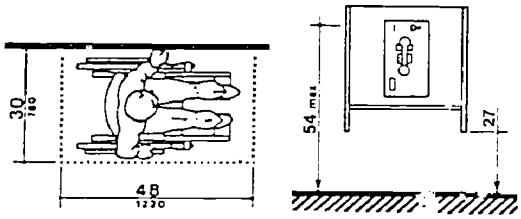


Parallel Approach

| | |
|---|---|
| 4. telephone enclosures with minimum 30" x 48" clear floor space and clear entrance opening at least 30" wide | 4. Measure the enclosed area and the door opening. Are there any protruding obstructions, such as boxes, waste cans, etc.? |
| 5. one telephone receiver equipped with volume control | 5. Look at the receiver to see if it has a volume control. |
| 6. cord from telephone to the handset at least 29" long | 6. Measure the length of the cord from the telephone to the handset. |

4.

# Building Products

## REQUIREMENTS FOR DRINKING FOUNTAINS

### Need

People in wheelchairs need drinking fountains mounted low enough so that they can reach the spout. They also need to be able to pull up under the fountain or along side it. People who have difficulty using their hands need controls that can be easily operated.

| Requirements for Drinking Fountains | Survey Techniques |
|---|---|
| 1. connected to a primary entrance by an accessible route | 1. Is the drinking fountain on an accessible route? If necessary, survey the route from a primary accessible building entrance to the drinking fountain. If the route is *not* fully accessible, note its deficiencies on an *Accessible Route Evaluation Form* and attach it to the *Special Spaces Evaluation Form.* |
| 2. minimum 30" x 48" clear floor space allowing either front approach or parallel approach to the drinking fountain | 2. Measure the clear floor space in front of the drinking fountain. The clear floor space may extend no more than 19" underneath the drinking fountain for a front approach. |

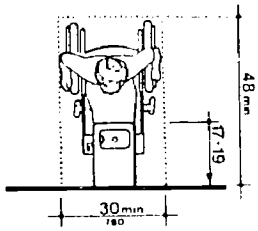


| | |
|---|---|
| 3. 27" knee clearance if the water fountain is wall- or post-mounted? | 3. Measure the distance from the underside of the water fountain to the floor. Note if it is less than 27". |

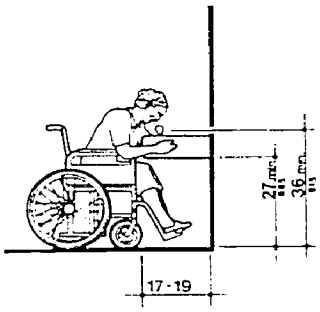


| | |
|---|---|
| 4. spout mounted at the front and no more than 36" from the floor? | 4. Is the spout at the front edge of the fountain? Measure the distance from the floor to the top of the spout. Note any deficiencies in the requirements. |
| 5. controls easily operable with one hand | 5. Try to operate the controls using only one hand with a closed fist. |

# Building Products
## REQUIREMENTS FOR ALARMS

4L.

**Need**

Visually impaired people need audible emergency warning systems and hearing impaired people need visual or other auxiliary alarms.

| Requirements for Alarms | Survey Techniques |
|---|---|
| 1. audible warning systems accompanied by visual warnings | 1. When the audible warning system is set off, (such as a fire alarm), is there also a visual warning (such as flashing emergency exit signs or flashing beacons)? |
| 2. visual warning systems accompanied by audible signal | 2. If there is a visual emergency warning system, has it also an audible signal? |
| 3. alarm controls on accessible routes or in accessible spaces no more than 54″ above the floor. | 3. Are alarm controls located along an accessible route or in an accessible space? If so, they must be mounted no more than 54″ above the floor and have a minimum 30″ x 48″ clear floor space (see *5. Functional Spaces*, question 4). |

# Building Products
## INVENTORY

4.

Date of Survey: Name of Building:

| | Yes | No |
|---|---|---|
| 1. Are public telephones provided in the building? | ☐ | ☐ |
| If the answer is **Yes,** identify the public telephones on the *Building Products Evaluation Form* and survey them for compliance using *4. Building Products: Requirements for Telephones* as a guide. | | |
| 2. Are drinking fountains provided in the building? | ☐ | ☐ |
| If the answer is **Yes,** identify at least one on the *Building Products Evaluation Form* and survey it for compliance using *4. Building Products: Requirements for Drinking Fountains* as a guide. | | |
| 3. Are alarms or emergency warning systems provided in the building? | ☐ | ☐ |
| If the answer is **Yes,** identify the alarms or emergency warning system(s) on the *Building Products Evaluation Form* and survey it for compliance using *4. Building Products: Requirements for Alarms.* | | |

# Building Products
EVALUATION FORM

# Functional Spaces

REQUIREMENTS

5.

4. controls, hardware or operating mechanisms such as light switches, vending machine controls, business machine controls, equipment controls, cabinet hardware, etc.:
   a) provided with a 30" x 48" clear floor space which allows either front approach or parallel approach for a person in a wheelchair
   b) mounted no more than 48"-54" above the floor
   c) operable with one hand without grasping, pinching or twisting

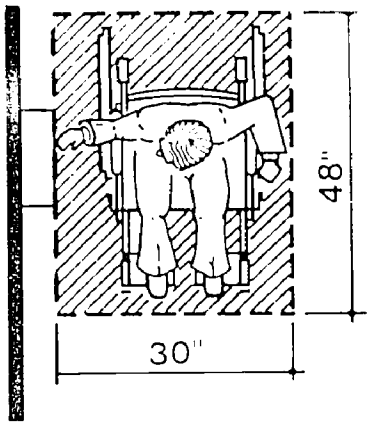


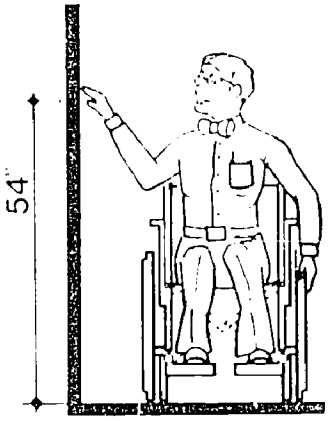


Parallel Approach

4. a) Measure the clear floor space available in front of the control. Does it allow for a front approach or a parallel approach?

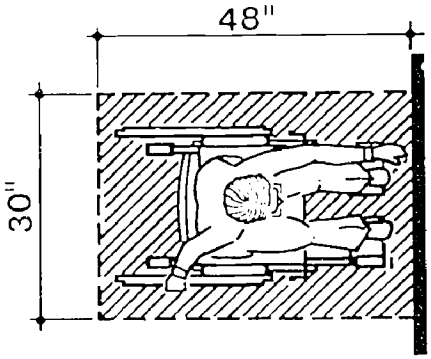


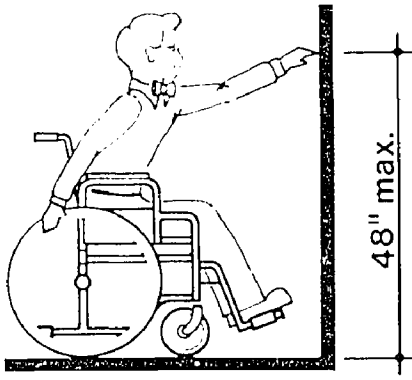


Front Approach

b) Measure the distance from the floor to the operable mechanism or control.

   If the clear floor space allows a front approach only, the control must not be mounted more than 48" above the floor. If the clear floor space allows a parallel approach, the control must not be mounted more than 54" above the floor. Note any deficiencies on the *Functional Spaces Evaluation Form.*

c) Try to operate the control using *one* hand only with a lightly closed fist. Do not close your hand tightly around the control; do not rotate your wrist fully; do not use the tip of one finger to push buttons; do not pinch with thumb and fingers. Note if you cannot operate the control this way.

5. shelving, storage, closets or drawers, etc.:
   a) a minimum of 30" x 48" clear floor space allowing either front or parallel approach
   b) shelves, etc. mounted between 9"-54" above the floor

5. a) Measure the clear floor space in front of the storage area. Note if less than 30" x 48" is provided.
   b) Measure the height of the shelves, drawers, hanging rods, etc. from the floor. Note if they are not within the acceptable range.

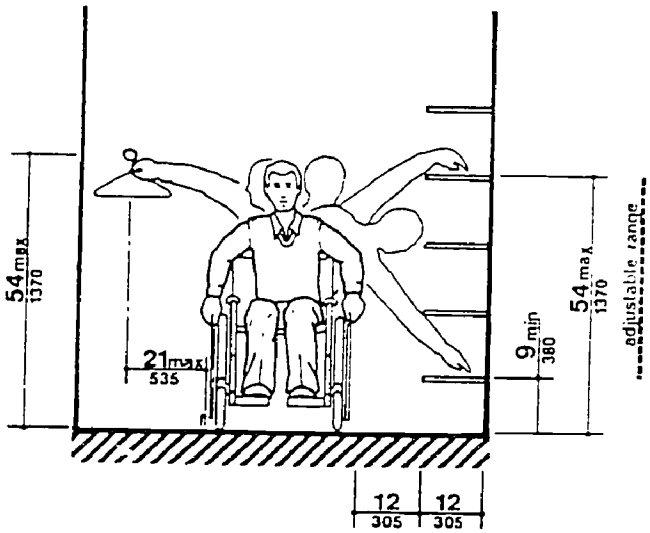


. signs providing general circulation directions, giving emergency information or identifying rooms or spaces:
   a) characters and background of contrasting colors
   b) raised or incised characters, if provided, between 5/8" and 2" high, and raised or incised 1/32" minimum

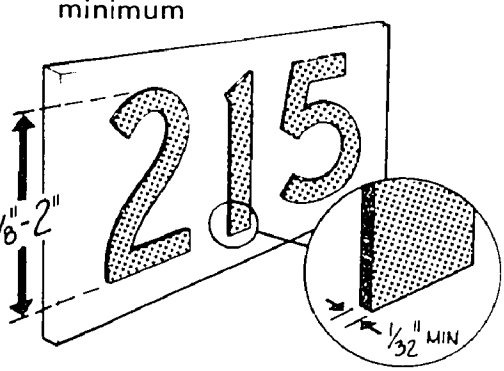


6. Look for signs along the route which give directions or emergency information; or identify rooms.
   a) Do the characters contrast with the background, e.g., yellow on black, red on white? Is the lettering large and easy to read? Note each sign that does not comply.
   b) If the sign is tactile, measure the characters. Note each sign that does not comply.

7. sinks:
   a) rim no higher than 34"
   b) knee clearance below the sink a minimum of 27" high, 30" wide, and 19" deep
   c) bowl maximum 6-1/2" deep
   d) 30" x 48" clear floor space in front of sink and extending no more than 19" underneath
   e) no exposed pipes or sharp or abrasive surfaces
   f) lever- or push-type faucets

7. a) Measure from the floor to the top of the sink. Note if it is more than 34" above the floor.
   b) Measure the distance from the underside of the sink to the floor. Note if it is less than 27" high. Measure the clear width and depth of the opening beneath the sink. Note if either dimension does not comply.
   c) Measure the depth of the bowl.
   d) Measure the floor space in front of and underneath the sink. No more than 19" of the clear floor space may be underneath the sink.
   c) Look underneath the sink. Note any exposed hot water or drain pipes. Run your hand over all exposed surfaces. Note any sharp or hazardous areas.
   f) Try to operate the faucet using only one hand with a lightly closed fist.

8. other equipment:

Although many pieces of equipment are not building products and therefore are not strictly "architectural," they become so much a part of the space and the use of the space that some basic guidelines for their design are included here. Equipment modification is technically a function of "program" rather than "architectural" accessibility, but the requirements for usable equipment are really architectural in nature. Equipment modification should be done on a case by case basis according to the specific needs of the disabled person who will be using it. However, the following general list will help you to identify barriers or potential barriers in pieces of equipment housed in spaces and used in programs which you have determined should be accessible.

The following requirements should be considered according to the needs of the people involved. The equipment should:

a) be on an accessible route
b) have adequate clear floor space to allow a wheelchair to pull up next to the equipment
c) have adequate knee space to allow a person to pull up under any work surface
d) have all operable parts mounted within the acceptable reach ranges
e) have all operable parts operable with one hand without grasping, pinching, or twisting
f) have all printed directions and emergency information in large letters of contrasting color to the background
g) have all emergency warning signals be both visible and audible.

# Functional Spaces
## INVENTORY

5.

Date of Survey: _____ Name of Building: _____

Since buildings, programs, and the need for accessible spaces will vary greatly both within and between institutions, the types, numbers and location of functional spaces to be surveyed will vary also. Since Section 504 requires "program accessibility" and not total architectural accessibility, the 504 coordinator or administrator in charge will have to select the spaces to be reviewed for accessibility. This may involve only a few rooms in each building, or an entire floor, or an entire building.

To provide some organization for the spaces surveyed, we suggest that they be grouped by a common accessible route. Since one of the requirements for each functional space is that it be on an accessible route from a primary entrance, it would be easier to identify all the spaces to be surveyed along one route, then survey that route and each space connected to it, and fasten those forms together in one package. In that way all the spaces in a single wing, or along a corridor or on a floor will have only one *Accessible Route Evaluation Form*, for all the spaces instead of one *Accessible Route Evaluation Form* for each space.

The following questions will help you organize this part of the survey.

How many rooms or spaces in this building will be surveyed? # of spaces

_____

Divide these spaces into groups according to their location on an accessible route (e.g., first floor; or third floor, east wing; or fifth floor, south corridor). List below each accessible route and identify the spaces along it to be surveyed.

Using 5. *Functional Spaces: Requirements* as a guide, complete an *Evaluation Form* for every functional space surveyed. Not all the requirements will apply to every space.

1. Accessible route begins at _____

   and ends at _____

   Spaces along this route to be surveyed:

2. Accessible route begins at _____

and ends at _____

Spaces along this route to be surveyed:

3. Accessible route begins at _____

and ends at _____

Spaces along this route to be surveyed:

4. Accessible route begins at _____

and ends at _____

Spaces along the route to be surveyed.

# Functional Spaces
## EVALUATION FORM

5.

Date of Survey: _____ Name of Building: _____

Functional Space Surveyed _____

List of Deficiencies

Functional Space Surveyed _____

List of Deficiencies

# Special Spaces
## REQUIREMENTS FOR TOILET ROOMS

### Need

Mobility impaired people need toilet facilities that they can get to, and can use easily and safely. Fixtures need adequate clear floor space for close approach and turning, and some require sturdily mounted grab bars for support or transfer. Controls and hardware must be within reach and easily operable. Hot, sharp, abrasive, or protruding objects are a hazard to both mobility and visually impaired people.

| Requirements for Toilet Rooms | Survey Techniques |
|---|---|
| 1. connected by an accessible route to a primary accessible building entrance | 1. Is the toilet room on an accessible route? If necessary, survey the route from a primary accessible building entrance into the toilet room. Include the toilet room door in the survey. If the route is *not* fully accessible, note its deficiencies on the *Accessible Route Evaluation Form* and attach it to the *Special Spaces Evaluation Form.* |
| 2. accessible route from the entrance to all fixtures and accessories | 2. Survey the path from the toilet room door to the fixtures. Be sure that privacy screens and double doors do not interfere with the accessible route. Look carefully for dispensers, shelves, etc., which may project dangerously into circulation areas. Waste baskets often block accessible routes. Note any deficiencies on an *Accessible Route Evaluation Form* and attach it to the *Special Spaces Evaluation Form.* |
| 3. 5' diameter clear floor space | 3. Measure the largest clear floor area in the toilet room. This area may overlap the accessible route and/or the clear floor spaces provided at the fixtures. |

4. If stalls are provided, at least one must meet one of the following requirements:
   a) 36" x 66" (wall-hung water closet)
   b) 36" x 69" (floor-mounted water closet)
   c) 48" x 66" (wall-hung water closet)
   d) 48" x 69" (floor-mounted water closet)
   e) 60" x 56" (wall-hung water closet)
   f) 60" x 59" (floor-mounted water closet)

4. Is the water closet wall-hung or floor mounted? Measure the inside diameter of the stall accordingly. If the stall does not comply, note its dimensions on the *Evaluation Form.*

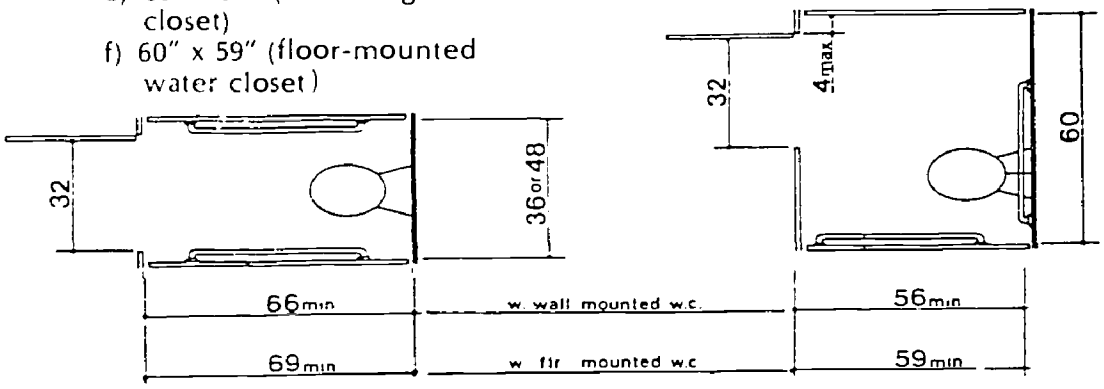


5. Stall door with 32" clear opening and 48" clear space in front

5. Note the swing of the door and measure the opening and the floor in front of the door. Note any deficiencies.

6. stalls provided with two grab bars adjacent to water closet, mounted horizontally 33"-36" above the floor. 1-1/4" to 1-1/2" in diameter and 1-1/2" from wall; capable of supporting 250 pound load.

6. Measure the distance from grab bar to floor. Is the grab bar horizontal? Measure its diameter and distance from the wall. Lean your full weight heavily on the grab bar, pull in all directions. Is it secure? Note any deficiencies.

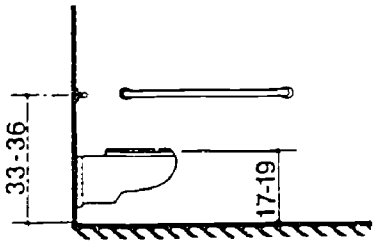


7. water closet mounted with seat 17"-19" above the floor

7. Measure from the floor to the top o the water closet seat. Note the height of the seat if it does not comply.

8. clear floor space at water closet not in stall of 60" x 56"

8. Measure the space around the wate closet as shown in the diagram. If the water closet is not near a wall one edge of the space should be 18" from the center of the water closet. Note the amount of availabl floor space if the dimensions do no comply.

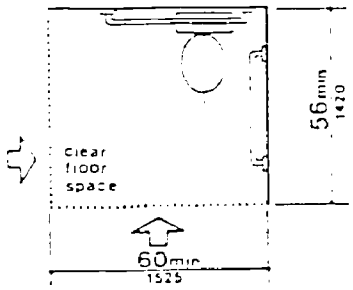

9. lavatory mounted 29" from floor to bottom of rim

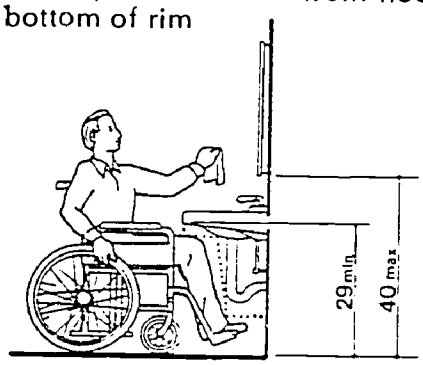


9. Measure from the floor to the underside of the front edge of the lavatory.

10. bottom edge of mirrors 40" maximum above floor

10. Measure from the floor to the bottom edge of the mirror. A full length mirror is acceptable.

11. 30" x 48" clear floor space at lavatory

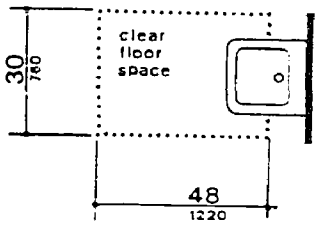


11. Measure the floor in front of the lavatory. Clear floor space measurement may extend no more than 19" underneath the lavatory. Note the amount of available floor space if the dimensions do not comply.

12. insulated or covered pipes and drains under lavatory

12. Look for and note any exposed hot water pipes, drain line, or sharp edges that might burn or cut a person's legs.

13. lever faucets at lavatory

13. Lever-type faucets are the most usable. To test a faucet for ease of use, try to operate it with one closed fist and not much force (no grasping, twisting, heavy pressure, etc.)

14. if provided, urinals with elongated lip mounted with rim 17" maximum above floor, or stall-type urinal

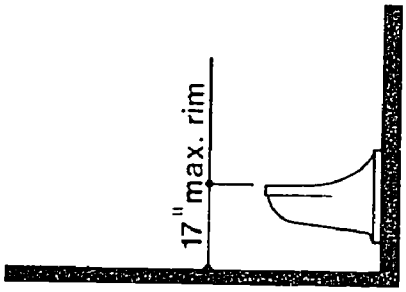


14. Measure the distance from the floor to the top of the rim. Is the urinal of the elongated lip design? Note any deficiencies.

15. 30" x 48" clear floor space at urinal

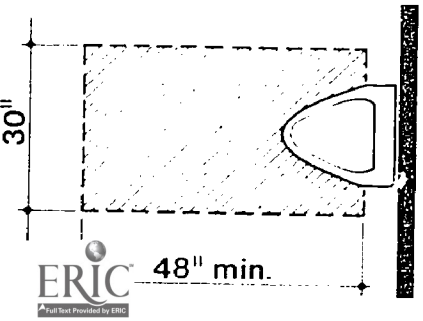


15. Measure the floor in front of the urinal. Note the amount of available floor space if the dimensions do not comply.

16. controls, dispensers, vending machines, etc. with 30" x 48" clear floor space; mounting height 48" maximum with forward approach, 54" maximum with parallel approach

16. Measure the floor in front of the object. If the space allows a forward approach, the distance from the floor to the highest operable part must not exceed 48". If the space allows a parallel approach, the distance from the floor to the highest operable part must not exceed 54".

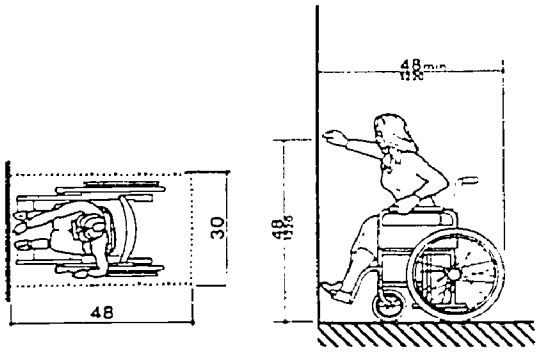


Front Approach

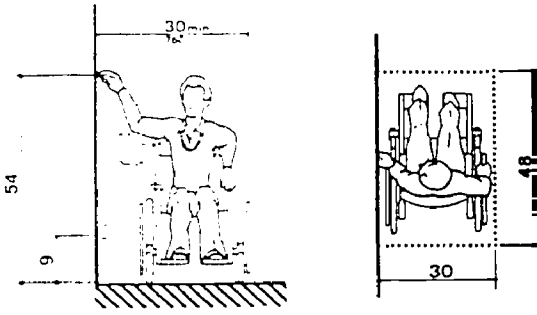


Parallel Approach

# Special Spaces
## REQUIREMENTS FOR BATHING FACILITIES

6.

### Need

Mobility impaired people need bathing facilities which provide adequate clear floor space for access and transfer. Both tubs and showers need seats and sturdy grab bars. All controls must be within reach and easily operable.

| Requirements for Bathing Facilities | Survey Techniques |
|---|---|
| 1. connected by an accessible route to a primary accessible building entrance | 1. Is the bathing facility on an accessible route? If necessary, survey the route from a primary accessible building entrance into the room. Include the door in the survey. If the route is *not* fully accessible, note its deficiencies on the *Accessible Route Evaluation Form* and attach it to the *Special Spaces Evaluation Form.* |
| 2. accessible route from the entrance door to all fixtures and accessories | 2. Survey the path from the door to the fixtures. Be sure that privacy screens and double doors do not interfere with the accessible route. Look carefully for dispensers, shelves, etc. which may project dangerously into circulation areas. Waste baskets often block accessible routes. Note any deficiencies on an *Accessible Route Evaluation Form* and attach it to the *Special Spaces Evaluation Form.* |
| 3. 5′ diameter clear floor space | 3. Measure the largest clear floor space in the room. This area may overlap the accessible route and/or the clear floor spaces provided at fixtures. |
| 4. Stall shower with seat:<br>a) 36″ x 48″ clear floor space in front of shower | 4. a) Measure the clear floor space in front of the shower. Note the amount of available floor space if the dimensions do not comply.<br>b) Measure the inside dimensions of the shower. It must be exactly 36″ in both directions. Note any difference in the dimensions.<br>c) Is there a seat that complies?<br>d) Measure the height of the grab bars from the floor. Measure the diameter and distance from the wall. Note any dimensions that do not comply. |

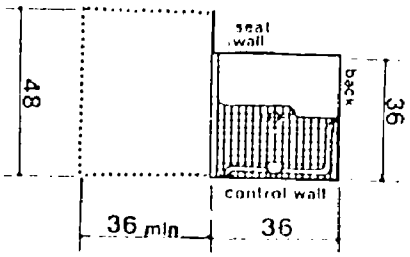


b) 36″ x 36″ inside dimension
c) fixed or folded seat 17″-19″ above floor, extending full depth of stall on wall opposite controls.
d) grab bars 33″-36″ above floor, mounted 1-1/2″ from back wall and on control wall; grab bar diameter 1-1/2″

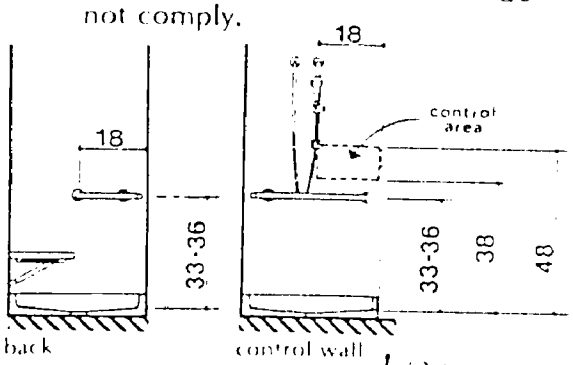

e) controls mounted between 38" and 48" above floor on wall opposite seat

f) shower spray unit with 60" minimum hose

e) Are the controls correctly located and at the right height?

f) Is there a hand-held shower spray unit?

5. roll-in shower:

a) 36" x 60" clear floor space in front of shower

b) 30" x 60" inside dimension

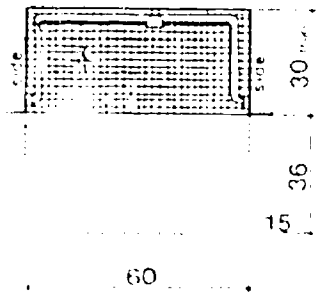


c) grab bars 33"-36" above floor mounted 1-1/2" from the wall on all three walls; grab bar diameter 1-1/2"

d) controls mounted on back wall 38" and 48" above the floor

5. a) Measure the clear floor space in front of the shower. Note the amount of available floor space if the dimensions do not comply.

b) Measure the inside dimensions of the shower. Note any dimensions that do not comply.

c) Measure the height of the grab bars from the floor. Measure the diameter and distance from the wall. Note any dimensions that do not comply.

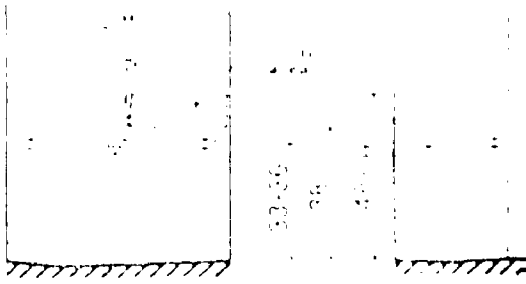


d) Are the controls correctly located?

6. bathtubs

a) 30" x 60" clear floor space along its entire length

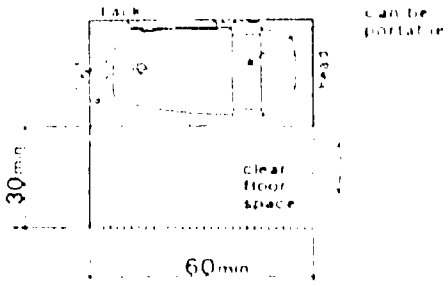


With Seat in Tub

6. a) Measure the clear floor space in front of the tub. Note the amount of available floor space if the dimensions do not comply.

b) Is there a seat either in the tub or built in at the head of the tub?

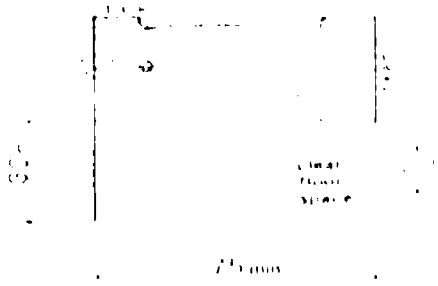


With Seat at Head of Tub

b) in-tub seat or seat at head of tub

c) grab bars 33"-36" above floor, mounted 1-1/2" from wall on both long wall and control wall; grab bar diameter 1-1/2"

c) Measure height of grab bars from floor. Measure diameter and distance from wall. Note any dimensions that do not comply.

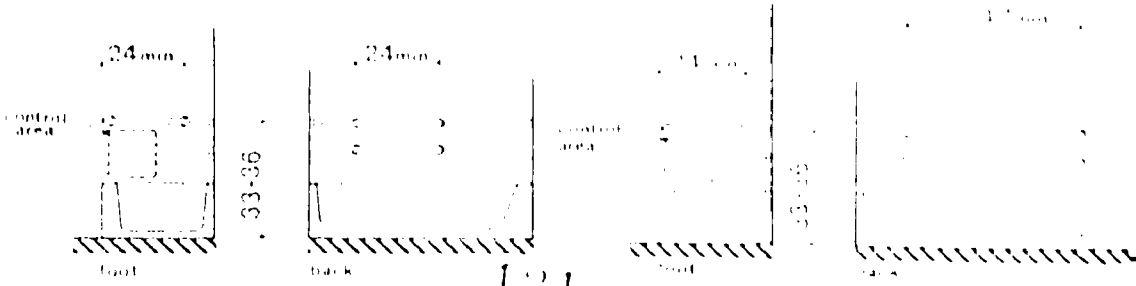

# Special Spaces

## REQUIREMENTS FOR ASSEMBLY AREAS

**Need**

people
from
perfo
an

**Requirements for Assembly Seating**

both
perfo

at
two
two

# Special Spaces
INVENTORY

Name of Building: _____

| | Yes | No |
|---|---|---|
| [illegible] located in the building? | ☐ | ☐ |
| [illegible] **Yes,** identify at least one toilet room (one [illegible] facilities are provided for men and [illegible] *Special Spaces Evaluation Form* and survey it [illegible] using 6. *Special Spaces: Requirements* [illegible] as a guide. (Use a separate *Evaluation* [illegible]) | | |
| [illegible] facilities provided in the building? | ☐ | ☐ |
| [illegible] **Yes,** identify at least one bathing facility [illegible] separate facilities are provided for men and [illegible] *Special Spaces Evaluation Form* and survey [illegible] using 6. *Special Spaces: Requirements* [illegible] as a guide. (Use a separate [illegible] for each bathing facility.) | | |
| [illegible] assembly areas such as a lecture hall with [illegible] an auditorium, or a theater? | ☐ | ☐ |
| [illegible] answer is **Yes,** identify each one on the [illegible] *Special Spaces Evaluation Form* and survey each one for [illegible] using 6. *Special Spaces: Requirements for Assembly Areas* as a guide. (Use a separate *Evaluation* [illegible] for each assembly area.) | | |

# Special Spaces
## EVALUATION FORM

Date of Survey: _____ Name of Building: _____

**Special Space Surveyed** _____

**List of Deficiencies**

**Special Space Surveyed** _____

**List of Deficiencies**

# Accessible Routes
## REQUIREMENTS

An accessible route is a clear path 36" wide and 80" high with a continuous smooth surface. Such a path must have no vertical changes in level greater than 1/2", and if it connects floors or levels, must do so by ramps, elevators or lifts.

**Need**

People who use wheelchairs, or who walk with difficulty or use walking aids such as crutches, canes, walkers, etc., need a wide, smooth, level, firm surface to get from place to place.

Steep slopes are difficult or impossible for many people who use wheelchairs to negotiate, especially if they have limited use of their shoulders. Small steps and bumps can block the front caster wheels of wheelchairs and trip people who walk with difficulty. Steps and stairs are impossible for people in wheelchairs, and exhausting for many others. Soft, uneven, or rough surfaces can be very difficult to move a wheelchair on, and surface openings can catch crutch and cane tips, or even wheelchair wheels. Visually impaired people need a path that is free from hazards including low hanging or protruding objects which cannot be detected by a cane.

**Requirements for Accessible Route**

1. minimum clear width of 36"

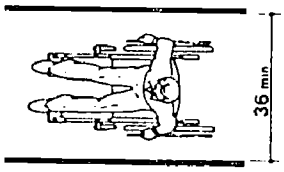


Minimum Clear Width for Single Wheelchair

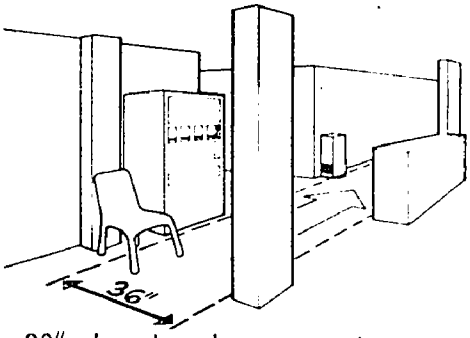


2. 80" clear head room and no objects protruding more than 4" from wall unless bottom edge is within 27" of floor

**Survey Techniques**

1. Measure the width of the walk, path, corridor, etc., which should be the accessible route. It must be at least 36" wide along its entire length (except at doors, see question 7). Walk the entire length of the route, and check for any fixed or movable objects which project into that 36" path. Vending machines, furniture, fire extinguishers, water fountains, posts, signs, etc., are examples of things which can reduce the width of an accessible route and make it inaccessible. Note the number and type of obstructions which may be difficult to remove.

2. The accessible route must have 80" of clear head room along its entire length. Objects which protrude into an accessible route may:
   a) protrude up to 4" and be of any height **or**
   b) protrude more than 4" if the bottom of the object is less than 27" above the floor.

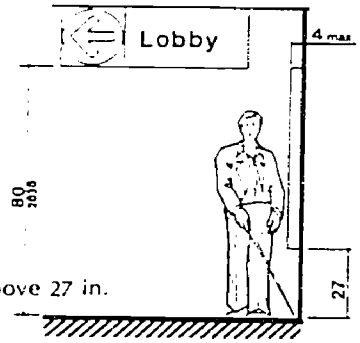


Leading Edge Above 27 in.

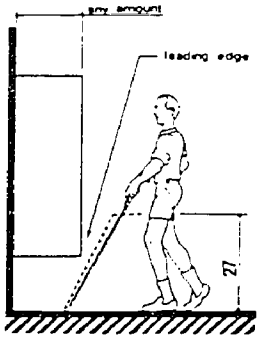


Below 27 in.

| Requirements For Accessible Route | Survey Techniques |
|---|---|
| | Walk the entire length of the accessible route. Look for ceiling- or wall-mounted signs, fire extinguishers, door closers or other objects which are less than 80" from floor and project into the 36" wide accessible route. 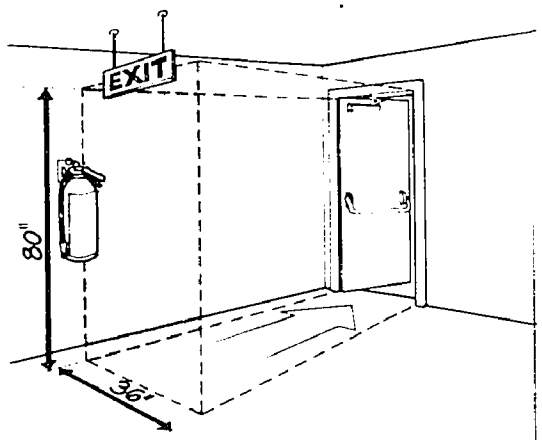  Measure the object to see if it protrudes more than 4" and if it has its bottom edge higher than 27" above the floor. Note all such non-complying objects on the *Accessible Route Evaluation Form.* |
| 3. no slope greater than 1:20 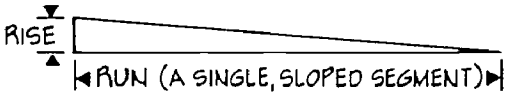  | 3. A slope of 1 in 20 (or 5%) means 1" of vertical rise for every 20" of horizontal run. This is a very gradual slope. For accessible routes on sites, use site plans with contour lines to find out how much a walk rises from one end to other. Measure the length of the walk. Divide the number of inches of rise by the number of inches of length. If the answer is 5% or less, the route complies. If some segments of the route are steeper than others, check the rise and run of those segments and figure the percentage. If the percent of slope is greater than 5%, the walk must be treated as a ramp. Using *3. Vertical Circulation: Requirements For Ramps* as a guide, survey the ramp and note any deficiencies on the *Accessible Route Evaluation Form.* |
| 4. no vertical changes in level greater than 1/2" 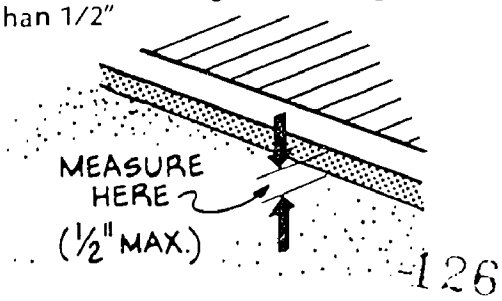  | 4. Walk the entire length of the accessible route. Are there any bumps, steps, curbs, cracks, or uneven surfaces which measure more than 1/2" high and less than 6"? Note each one and its height. |

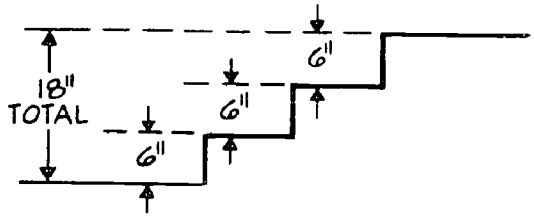


Are there any vertical changes in level greater than 6" such as curbs, steps, stairs? Note any vertical changes in level over 6"
Count a set of stairs as one vertical change in level and list its total height.

5. surface texture: stable, firm, and non-slip

5. What is the surface material? Paving, wood, tile, brick, or dense low pile carpet are examples of acceptable surfaces. Heavy, thick carpet, terazzo that may be wet, gravel, sand, or mud are unsuitable surfaces. Check the entire length of the route for changes in surface material. Note any areas that have unsuitable surfaces, or sand, stones, loose gravel, etc.

6. no openings with *both* dimensions greater than 1/2"

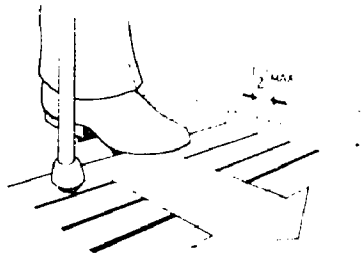

6. Gratings in the surface of an accessible route must not have openings which measure more than 1/2" in *both* directionss. A grating opening may be 1/2" or less in one dimension, and any length in the other. However, the long dimension must run across (perpendicular to) the direction of travel. Check the entire length of the route for grates, drains, openings, or cracks and note those that do not comply.

7. accessible doors

7. When an accessible route passes through or ends at a door, it must meet the door requirements. Using *B. Doors: Requirements* as a guide, survey each door the accessible route passes through. Attach the *Door Evaluation Forms* to the *Accessible Route Evaluation Form.*

8. signs providing general circulation directions, giving emergency information or identifying rooms or spaces:
   a) characters and background of contrasting colors
   b) raised or incised characters, if provided, between 5/8" and 2" high, and raised or incised 1/32" minimum

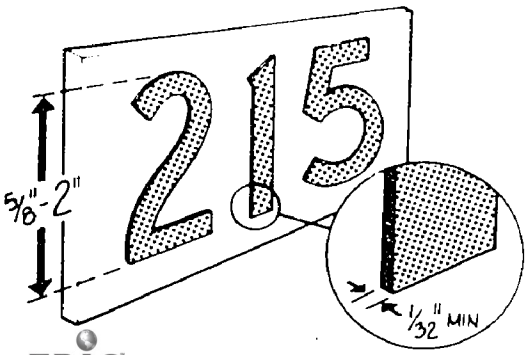


8. Look for signs along the route which give directions or emergency information or identify rooms.
   a) Do the characters contrast with the background, e.g., yellow on black, red on white? Is the lettering large and easy to read? Note each sign that does not comply.
   b) If the sign is tactile, measure the characters. Note each sign that does not comply.

# Accessible Route
## EVALUATION FORM

Date of Survey: _____ Name of Building: _____

**Route Surveyed Begins at** _____

**and Ends at** _____

**List of Deficiencies**

**Route Surveyed Begins at** _____

**and Ends at** _____

**List of Deficiencies**

# Doors
## REQUIREMENTS

B.

### Need

Disabled people with mobility impairments need doors that are wide enough to pass through without bumping into the sides. They need to be able to be out of the way of the swing of the door while pulling it open. People with limited use of hands, arms, and shoulders need hardware that is easily operated without tight grasping or twisting.

### Requirements for Doors

1. minimum clear opening 32"

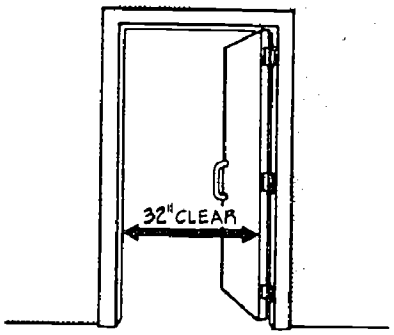


2. maximum threshold height of 1/2"

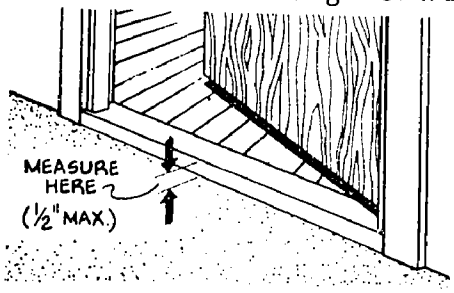


3. floor level and clear for 5' on pull side of door; 18" space to latch side of door on the pull side

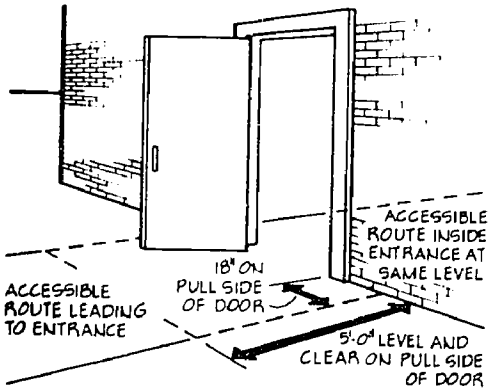


### Survey Techniques

1. Open the door to its 90° open position. Measure the opening from inside the stop to inside the edge of the door. If the opening is less than 32", note its dimension. If the door is a double leaf door, one leaf must meet the 32" requirement.

2. Measure vertical edge of threshold. If it is higher than 1/2", note its dimension.

3. Measure the floor on the pull side of the door. Note any obstructions or changes in level. Measure the space to the side of the door. If it is less than 18" clear, note its dimension.

4. floor level and clear for 4′ on the push side of the door
   12″ space to latch side of door on push side.

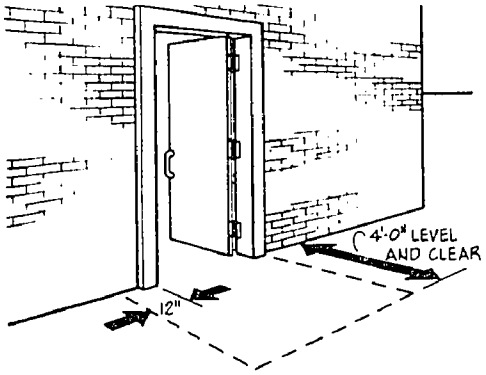


4. Measure the floor on the push side of the door. Note any obstructions or changes in level. Measure the space to the side of the door. If it is less than 12″, note its dimension.

5. push-pull or lever-type hardware

5. Try to operate the door hardware without closing your hand. Can you do it without grasping, pinching, twisting, etc.? Note any hardware that requires tight grasping and/or more than one movement.

6. closer pressure 5 pounds maximum for interior doors (8 pounds for exterior doors)

6. Use a fish weighing scale to measure the door closer pressure. Hook the scale onto the door handle and pull the door open. Note how many pounds of effort are required to open the door if it is more than 5 pounds.

# Doors
## EVALUATION FORM

B.

Date of Survey: _____ Name of Building: _____

**Door Surveyed** _____

**List of Deficiencies**

**Door Surveyed**

**List of Deficiencies**

# References


Applied Urbanetics Inc. *User's Manual for 1970 Census Fourth Count (Population) School District Data Tapes.* Washington, D.C.: National Center for Educational Statistics, U.S. Office of Education, 1977.

Arends, Richard I., and Jane H. Arends. *Systems Change Strategies in Educational Settings.* New York: Human Science Press, 1977.

Berdic, D. R., and J. F. Anderson. *Questionnaires: Design and Use.* Metuchen, N.J.: The Scarecrow Press, Inc., 1974.

Berman, Mendel, ed. T & I for the handicapped? You've got to be kidding. *American Vocational Journal*, February 1975, 78-83.

Berrie, P. J. Assessing instructional needs in your district. *Clearinghouse*, 1977, 50:221-223.

Black, Talbot. Designing and implementing a technical assistance needs assessment. Unpublished paper, 1978.

Black, Toby J. Where do I go from here? *Rehabilitation Literature*, 1976, 37(6): 68-71.

Boland, Jeanne M. The nominal group process in vocational rehabilitation. *Rehabilitation Counseling Bulletin*, 1978, 21(4):335-337.

Bond, Richard, and Robert Weisgerber. *Mainstreaming the Handicapped in Vocational Education, Developing a Positive Attitude.* Palo Alto, California: American Institutes for Research in the Behavioral Sciences, 1977.

Bouchard, Thomas, and Melanie Hane. Size, performance and potential in brainstorming groups. *Journal of Applied Psychology*, 1974, 54(1):51-55.

Bowser, S. E., and E. R. Roberson. Needs assessment: a study of vocationally related needs for secondary special education. *Educational Technology*, 1977, [illegible]-46.

Brolin, Donn E., and B. J. D'Alongo. Critical issues in career education for handicapped students. *Exceptional Children*, 1979, 45(4):246-253.

Burello, Leonard C., Nancy L. Ka e, and Ronald Nutter. Managing special education: developing an i dependent management system. *Journal of Special Education*, 1978, 12( ):105-111.

Camaren, R. James, *et al. Guidelines for Improvement of Vocational Programs and Resources to Serve Needs of Handicapped Students.* Englewood, California: Performance Management Specialists, Inc., Final Report, 1977.

Carl, Kenneth E. Rehabilitating the physically handicapped: the Williamsport story. *American Vocational Journal*, November 1972, 36-38.

Carlson, Richard E. The oak that grew from the Smith-Hughes Act. *School Shop*, April 1978, 49.

Carter, Rose Mary. Teacher behavior and the classroom casualties. *American Vocational Journal*, September 1975, 55-57.

Casey. K. Semantic differential technique in the examination of teacher attitudes toward handicapped children. *Exceptional Child*, 1978, 25(1): 41-52.

Clarcq, Jack R., and Edward A. Maruggi. Developing vocational training programs for handicapped students. *Educational Technology*, December, 1978, 30-33.

Cole, Robert W., and Rita Dunn. A new lease on life for education of handicapped. *Phi Delta Kappan*, 1977, 59(7):3-10, 22.

Comer, Ronald C., and June Piliaun. As others see us: attitudes of physically handicapped and normals toward own and other groups. *Rehabilitation Literature*, 1975, 36(7):206-221.

Committee, American Association of School Administrators. *Management Surveys for Schools; Their Uses and Abuses.* Washington, D.C.: American Association of School Administrators, 1964.

Comptroller General of the United States. *Training Educators for the Handicapped: A Need to Redirect Federal Programs.* Washington, D.C.: U.S. General Accounting Office, 1976.

Cone, John C. Delphi: Polling for consensus. *Public Relations Journal*, February 1978, 12-13.

Cypert, Frederick R., and Walter L. Gant. The Delphi technique: a case study. *Phi Delta Kappan*, January 1971, 272-273.

Dahl, Peter R., J. A. Appleby and D. Lipe. *Mainstreaming Guidebook for Vocational Educators: Teaching the Handicapped.* Salt Lake City, Utah: Olympus Publishing Company, 1978.

Delbecq, Andrew H., Andrew H. Van de Ven and David H. Gustafson. *Group Techniques for Program Planning: A Guide to Nominal Group and Delphi Processes.* Glenview, Ill.: Scott, Foresman and Company, 1975.

Dillman, Don A. *Mail and Telephone Surveys.* New York: John Wiley and Sons, 1978.

Duckworth, Pauline. *Construction of Questionnaires.* Washington, D.C.: U.S. Civil Service Commission. Personnel Research and Development Center, 1973.

Duncan, W. Jack. *Decision Making and Social Issues.* Hinsdale, Ill.: Dryden Press, 1973.

Dunnette, M. D., J.P. Campbell and K. Jaastad. Effect of group participation on brainstorming effectiveness for two industrial samples. *Journal of Applied Psychology*, 1963, 47:30-37.

Dwyer, William A. Career development for deaf adults: Blue Hills breaks the communication barrier. *American Vocational Journal*, May 1973, 37-39.

Feiss, Caroline. The nominal group process: its uses in comprehensive health planning. Unpublished paper, 1977.

Florida State Advisory Council on Vocational and Technical Education. *Accessibility of Buildings and Facilities to the Physically Disabled.* Tallahassee, Florida: State of Florida, Department of Education, 1977.

Franken, Marion E. *Identifying Handicapped Students and Their Vocational Needs for 1977-1982.* Madison, Wisconsin: Wisconsin University, Studies Center; Washington, D.C.: Department of Health, Education & Welfare, Office of Education, 1977.

Frankenhuis, Jean Pierre. How to get a good consultant. *Harvard Business Review* November-December 1977, 135-139.

Gallagher, James J. Technical assistance and the nonsystem of American education. Conference paper in *National Technical Assistance Systems in Special Education*, Maynard C. Reynolds (Ed.), Conference Reports, Washington, D.C., 1974.

Gardner, G. *Social Surveys for Social Planners*. Sydney: Holt, Rinehart and Winston, 1976.

Golin, Anne K. Stimulus variables in measurement of attitudes toward disability. *Rehabilitation Counseling Bulletin*, September 1970, 20-27.

Gollay, Elinor, and John F. Doucette. How to deal with barriers in schools. *School Shop*, 1978, 37(8):86-89.

Greenwood, Charles S., and Raymond E. Morley. *Iowa Vocational Education Special Needs Assessment Project*. Des Moines, Iowa: Iowa Department of Public Instruction, Special Needs Section, and Drake University, College of Education, October 1977.

Guskin, S. L. Simulation games on the "mainstreaming" of mildly handicapped children. *Viewpoints*, 1973, 3(1):85-95.

Goldman, Samuel, and William Moynihan. Strategies for consultant-client interface. *Educational Technology*, October 1972, 27-30.

Halloran, W. D. Handicapped persons: who are they? *American Vocational Journal*, 1978, 53(1):30-31.

Hagedorn, H. J., Beck, K. J., Neubert, S. F. and Werlin, S. H. *A Working Manual of Simple Program Eval. Techniques for Community Mental Health Service Centers*. (Prepared by Arthur D. Little, Inc., Cambridge, Mass. for NIMH) DHEW (Adm.) 76-404, 1976.

Hanson, E. Mark, and E. Michael Brown. A contingency view of problem solving in schools: a case analysis. *Educational Administrator Quarterly*, 1977, 71-91.

Harasymiu, Stefan J., and Marcia D. Horne. Teacher attitudes toward handicapped children and regular class integration. *Journal of Special Education*, 1976, 10(4):393-399.

Havelock, R. G. *Planning for Innovation*. Ann Arbor, Michigan: Institute for Social Research, 1969.

Holmes, Marvin C., and Clayton P. Omvig. *Supplement A to Vocational Education for the Handicapped in Kentucky: A Survey of the Perceptions of Personnel in Vocational Education, Special Education and Vocational Rehabilitation*. Lexington, Ky.: Kentucky University; Washington, D.C.: Department of Health, Education and Welfare, Office of Education, Final Report, 1975.

Holstrop, Richard W. *Managing Education for Results*. Homewood, Ill.: E-C Publishing Company, 1975.

Holt, K. S. Some key points in planning services for handicapped children. *Child Care Health and Development*, 1976, 2(6):387-394.

Hughes, James H. *Mainstreaming the Handicapped in Preparatory Occupational Education Programs in North Carolina*. Chapel Hill, N.C.: System Sciences, Inc., 1978.

Hughes, Jim and Jim Lunsford. *Strategies for Overcoming Barriers to Effective Programs and Services for Students with Special Needs in Vocational Education: A Conference Report*. Summer Conference Session for Vocational Education Teachers of the Disadvantaged/Handicapped, Greensboro, N.C., 1977.

Hull, Marc E. *Vocational Education for the Handicapped: A Review of Information Series #119*. Columbus, Ohio: National Center for Research in Vocational Education, 1978.

Jordan, June B. *Exceptional Students in Secondary Schools*. Reston, Va.: The Council for Exceptional Children, 1978.

Katz, Sholms, and Ester Shurka. The influence of conceptual variables on evaluation of physically disabled and nondisabled. *Rehabilitation Literature*, 1977, 38(11-12):369-373.

Kaufman, R. N .us assessment; symposium. *Educational Technology*, 1977, Prentice H ., 1972.

Klein, Howard J. *Other People's Business, A Primer on Management Consultants*. Charter, N.Y.: Jason Publishing Co., 1977.

Klein, Josephine. *Working with Groups: The Social Psychology of Discussion and sion*. Third ed., London: Hutchinson U. Library, 1963.

[illegible]

Margaret [illegible]
12: 576-578

[illegible] [illegible]
A.L.A. [illegible] 195[illegible]

Moser, C. A. Survey Methods [illegible]
Ltd., 1958.

National Administration of School [illegible]
*Superintendent.* Washington, D.C. [illegible]
Administrators, 1963.

National Advisory Committee on the Handicapped. *The Unfinished Revolution: Education of the Handicapped, 1976 Annual Report.* Washington, D.C.: Department of Health, Education and Welfare.

Oppenheim, A. N. *Questionnaire Design and Attitude Measurement.* New York: Basic Books. 1966.

Park, Leslie D. Barriers to normality for the handicapped adult in the U.S. *Rehabilitation Literature,* 1975, 36(4):108-111.

Paul, J. L. *An evaluation of a project to implement mainstreaming of handicapped students in a large urban school system.* Unpublished report, 1974.

Paul, J. L., A. P. Turnbull and W. M. Cruickshank. *Mainstreaming: A Practical Guide.* Syracuse, N.Y.: Syracuse University Press, 1977.

Phelps, L. Allen, and William D. Halloran. Assurance for handicapped learners. *American Vocational Journal,* November 1976, 36-37.

Phelps, L. Allen, and Tim L. Wentling. A proprosed system for identification, assessment and evaluation of special needs learners. *Journal of Industrial Teacher Education,* Spring 1977, 14.

Phillips, Linda. *Barriers and Bridges.* L. Carmel and R. Renzullo (eds.). Sacramento, California: California Advisory Council on Vocational Education, 1977.

President's Committee on Employment of the Handicapped, Washington, D.C. *Pathways to Employment.* Recommendations made at meeting of President's Committee on Employment of the Handicapped, Washington, D.C., November 22-23, 1976.

Proctor, D. I. An investigation of the relationships between knowledge of exceptional children, kind and amount of experience and attitudes toward classroom integration. Doctoral Dissertation, Michigan State University, 1967.*Dissertation Abstracts,* 1967, 28:1721-A.

Rasp, Alfred, Jr. A new tool for administrators: Delphi and decision-making. *North Central Association Quarterly,* 1974, 48(3):320-325.

Razeghi, Jane Ann, and Sharon Davis. Federal mandates for the handicapped vocational education opportunities and employment. *Exceptional Children,* 1979, 45(5):353-359.

Reeder, Charles W., and Donald C. Linkowski. An institution attitudinal legal and leisure barriers to disabled. *Rehabilitation Counseling Bulletin,* 1976, 20(1): 76-79.

Revis, Joseph S., and Betty D. Revis. Transportation and disability: an overview of problems and prospects. *Rehabilitation Literature,* 1978, 39(6-7):120-179.

Reynolds, Maynard C. (ed.) *National Technical Assistance Systems in Special Education.* Report of the conference held in Washington, D.C., May 29-30, 1974.

Rice, Eric, and Rose M. Etheridge. *Program Model in New Careers for Handicapped Children and Youth.* Chapel Hill, N.C.: System Sciences, Inc.; Washington, D.C.: U.S. Office of Education, 1977.

Rice, Eric, Rose M. Etheridge, J. R. Poe, Jr., and J. H. Hughes. *Vocational Education in Correctional Institutions: Assessment of Programs in Region IV.* Chapel Hill, N.C.: System Sciences, Inc.; Washington, D.C.: Department of Health, Education and Welfare, Office of Education, Final Report, April 1978.

Rosen, Beatrice M. *A Model for Estimating Mental Health Needs Using 1970 Census Socioeconomic Data.* U.S. Department of Health, Education and Welfare, Public Health Service. Washington, D.C.: Government Printing Office, 1974 (DHEW Publication No. (ADM)74-63).

Rumble, Richard R. Vocational education for the handicapped. *Clearinghouse,* 1978, 53:132-135.

Sackman, Harold. Delphi Critique: *Expert Opinion, Forecasting Group Process.* Lexington, Mass.: Lexington Books, D. C. Heath and Co., 1975.

Schein, Edgar. *Process Consultation: Its Role in Organization Development.* Reading, Mass.: Addison Wesley Publishing Company, 1969.

Schipper, William V., and Leonard A. Kenowitz. Educational futures—a forecast of events affecting the education of exceptional children: 1976-2000. *Journal of Special Education,* 1976, 10(4):401-413.

Schwartz, Stuart E. *Architectural Considerations for a Barrier Free Environment.* Gainesville, Florida: Florida University, College of Education; Washington, D.C.: Department of Health, Education and Welfare, Office of Education, 1977. (ED153048)

Shotel, J. R., R. P. Iano and J. R. McGettigan. Teacher attitudes associated with the integration of handicapped children. *Exceptional Children*, 1972, 38:677-683.

Siegel, L. M., C. C. Attkisson and A. H. Cohn. Mental health needs assessment: strategies and techniques in *Resource Materials for Community Mental Health Program Evaluation: Vol. II—Needs Assessment and Planning*, M. H. Hargreaves and J. E Sorensen (eds.). National Institute of Mental Health Evaluation Study Reports Accession #PB-249-044. Springfield, Va.: National Technical Information Service, 1975.

Sirois, Herman A., and Edward F. Iwaniki. Delphi—discrepancy evaluation: a model for quality control of mandates programs. *Educational Technology*, September 1978, 33-40.

Smets, Stanley J., Tali A. Conene and Larry D. Edwards. Definitions of disability as determinants of scores on the attitude toward disabled persons scale. *Rehabilitation Counseling Bulletin*, 1971, 14(4):227-235.

Souder, William E. *Field Studies with a G-Sort/Nominal Group Process for Selecting Research and Development Projects.* Technology Management Studies Group Project. Research Policy 4, Pittsburgh, Pennsylvania: University of Pittsburgh, 1975, Summary 172-188.

Souder, W. E. Effectiveness of nominal and interacting group decision processes for integrating R & D and marketing. *Management Science*, 1977, 23(6):595-605.

Stedman, Donald J. The technical assistance system: a new organizational form for improving education. Conference paper in *National Technical Assistance Systems in Special Education*, Maynard C. Reynolds (ed.). Conference Reports. Washington, D.C., 1974.

Steele, Fritz. *Consulting for Organizational Change.* Amherst, Mass.: University of Massachusetts Press, 1975..

Stephens, K. G. *A Fault Tree Approach to Analysis of Educational Systems as Demonstrated in Vocational Education.* Doctoral Dissertation. University of Washington, 1972.

Taylor, J. L., and R. Walford. *Simulation in the Classroom.* Baltimore, Md.: Penguin Books, 1972.

Tersene, Richard J., and Walter E. Riggs. The Delphi technique: a long-range planning tool. *Business Horizons*, 1976, 19(2):51-56.

Thoms, Denis F. From needs assessment to implementation: a planning and action guide. *Educational Technology*, July 1978, 5-9.

Tindall, Lloyd W. Breaking down the barriers for disabled learners: a progress report. *American Vocational Journal*, November 1975, 47-49.

*Program Evaluation and Planning for the Vocational Education of Handicapped Students' Secondary and Postsecondary Articulation.* Madison, Wisconsin: Wisconsin University, Vocational Studies Center; Washington, D.C.: Department of Health, Education and Welfare, Office of Education, 1977. (ED150332).

Tomlinson, R., and L. Albright. P.L. 94-142 is coming! Are you ready? *School Shop*, 1977. 36(6):28-31.

U.S. Congress. *Education Amendments of 1976.* P.L. 94-482. Washington, D.C.: U.S. Government Printing Office, 1976.

U.S. Congress. *Education for All Handicapped Children Act of 1975.* P.L. 94-142. Washington, D.C.: U.S. Government Printing Office, 1975.

U.S. Congress. *The Rehabilitation Act Amendments of 1974.* P.L. 93-480. Washington, DC.: U.S. Government Printing Office. 1974.

U.S. Congress. *The Rehabilitation Act of 1973.* P.L. 93-112. Washington, D.C.: U.S. Government Printing Office, 1973.

U.S. Congress. *The Architectural Barriers Act of 1968.* P.L. 90-480. Washington, D.C.: U.S. Government Printing Office, 1968.

U.S. Department of Health, Education and Welfare. *Federal Register. Washington, D.C.: U.S. Government Printing Office, Vol. 42, No. 163, August 23, 1977.*

U.S. Department of Health, Education and Welfare, Office for Civil Rights. *Civil Rights, Handicapped Persons, and Education: Section 504 Self-Evaluation Guide for Pre-School, Elementary, Secondary, and Adult Education.* Washington, D.C., 1978.

Van de Ven, A. H. *Group Decision Making and Effectiveness.* Kent, Ohio: Kent State University, School of Business Administration, 1974.

Van de Ven, A. H., and A. J. Delbecq. The effectiveness of nominal, delphi, and interacting group decision making processes. *Academy of Management Journal*, 1974, 17:605-621.

Vroman, H. W. An application of the NGT in education system analysis. *Educational Technology*, 1975, 15(6):51-53.

Vroom, V. H., L. D. Grant and T. S. Cotton. Consequences of social interaction in group problem solving. *Organizational Behavior and Human Performance*, 1969, 4:77-95.

Wentling, Tim L. Teaching students with special needs. *Industrial Education*, May/June 1978, 29-32.

Weatherley, Richard, and Michael Lipsky. Street level bureaucrats and institutional innovation: implementing special education reforms. *Harvard Educational Review*, 1977, 47(2):171-197.

White House Conference on Handicapped Individuals. *Volume One, Awareness Papers.* Washington, D.C.: U.S. Government Printing Office, 1977.

Williams, Rogert T. *A model for identifiying community education needs.* University of Wisconsin, unpublished paper, April 1978.

Witkin, B. R. Fault tree analysis as a planning and management tool: a case study. *Educational Planning*, 3(3), January 1977.

*Management Information Systems: Application to Educational Administration.* Hayward, California: Alameda County PACE Center, 1971. ERID:ED 057 608.

Needs assessment kits, models and tools. *Educational Technology*, November 1977, 5-17.

*Inservice Training in Using Fault Tree Analysis as a Technique for Evaluation and Management of Vocational Education Programs.* Interim Report. EPDA Project 01-700-EF-001-71, Alameda Co. School Dept., Hayward, Cal., Sept. 1971.

Witkin, B. R. and R. G. Stephens. *Fault Tree Analysis: A Research Tool for Educational Planning.* Tech. Report #1, Alameda Co. PACE Center, Hayward, Cal., 1968.

*Fault Tree Analysis: A Management Science Technique for Educational Planning and Evaluation.* Technical Report No. 2. Hayward, California, 1973.