DOCUMENT RESUME

ED 193 387 UD 020 926

AUTHOR Daneke, Gregory A.: Steiss, Alan Walter
TITLE Policy/Program Implementation. Instructors' and Students' Manual. Module Number Ten of Policy/Program Analysis and Evaluation Techniques, Package VI.
INSTITUTION Virginia Polytechnic Inst. and State Univ., Blacksburg. Div. of Environmental and Urban Systems.
SPONS AGENCY Department of Housing and Urban Development, Washington, D.C. Office of Policy Development and Research.: National Training and Development Service for State and Local Government, Washington, D.C.
PUB DATE [77]
NOTE 122p.: For related documents see UD 020 926-937. Prepared by the Center for Urban and Regional Studies.

EDRS PRICE MF01/PC05 Plus Postage.
DESCRIPTORS Case Studies: Government (Administrative Body): Government Employees: Inservice Education: Instructional Materials: Learning Modules: *Management Development: Management Systems: Postsecondary Education: Professional Continuing Education: *Program Implementation: *Public Administration: *Public Administration Education: Public Agencies: *Public Policy: Systems Approach

ABSTRACT

This packet contains the materials necessary for presentation of the tenth of ten modules that comprise a portion of the National Training and Development Service Urban Management Curriculum Development Project. This module focuses on policy/program implementation which is concerned with clarification of goals, task delineation, organizing, planning, scheduling, delegation of responsibilities, and follow-up. This packet consists of a combined instructor's and student/participant's manual providing background information on program implementation and case studies which are the vehicles for introduction and application of implementation concepts. (Author/MK)

POLICY/PROGRAM IMPLEMENTATION

Instructors' and Students' Manual

Prepared by Gregory A. Daneke and
Alan Walter Steiss

Module Number Ten
of
POLICY/PROGRAM ANALYSIS AND
EVALUATION TECHNIQUES Package VI

Developed by

CENTER FOR URBAN AND REGIONAL STUDIES
DIVISION OF ENVIRONMENTAL AND URBAN SYSTEMS
COLLEGE OF ARCHITECTURE AND URBAN STUDIES
VIRGINIA POLYTECHNIC INSTITUTE AND STATE UNIVERSITY

Under Contract to

THE URBAN MANAGEMENT CURRICULUM DEVELOPMENT PROJECT

THE NATIONAL TRAINING AND DEVELOPMENT SERVICE

5028 Wisconsin Avenue, N.W.

Washington, D. C. 20016

Funded by

The Office of the Assistant Secretary for Policy Development
and Research, U.S. Department of Housing and Urban Development

Package VI

TABLE OF CONTENTS

CHAPTER 1

CURRICULUM MODULE SCOPE AND PURPOSE

All too often it is assumed that, once the analysis phase has been completed and a policy decision has been made, the necessary governmental activities or programs will be successfully carried out in accordance with such policy directives--that such activities/programs will follow logically from the policy statements. Unfortunately this assumption is invalid in many cases. Nowhere is the old adage: "There's many a slip 'twixt the cup and the lip" more aptly applied than in reference to the translation of policy/program plans into successful program operations. While programmatic failures often are the result of poorly conceived plans, well-developed plans and programs also may "run amuck" in the operational process. Quite obviously, both ingredients are vital to successful implementation; however, only recently have analysts begun to suggest that both concerns--good plans and good operations--are relevant to program implementation.

While the literature of the fields of public administration, planning, and political science has devoted increasing attention to the problems and issues of policy/program implementation, much of these writings focus on descriptive studies of programmatic failures or general procedures for policy/program evaluation. Succinct guidelines for policy implementation are to be found only in scattered, case-specific examples. These gaps in our understanding of techniques for policy/program implementation, in part, stem from the artificial dichotomy between policy planning/analysis and program implementation/management that has been fostered by some disciplines/professionals--and the consequent lack of conceptual integration among the diversity of perspectives that only recently have been brought to bear on these issues and concerns. To the extent that analytical approaches have emerged, the focus has been on feasibility issues as opposed to operational problems. Seldom has a comprehensive set of strategies for analysis/implementation/evaluation been put forth. While this curriculum module cannot hope to provide a totally comprehensive approach, its purpose is, at least, the reunification of these heretofore disparate elements.

MODULE FORMAT AND OBJECTIVES

It has been said that "a picture is worth a thousand words". In the field of public service education, first-hand experiential applications of new concepts and techniques often are worth a thousand pages of theoretical textbook presentation of these same concepts and techniques. This is not to suggest that cookbook, "how-to-do-it" materials can or should replace a good theoretical grounding in urban management concepts and techniques, but rather that many contemporary tools of management can only be fully appreciated through real-world (or near real-world) applications.

One of the central problems, however, in the development of effective educational programs for urban management personnel is the almost total lack of good instructional materials to provide student participants with a "hands-on" experience in dealing with new concepts and techniques. While textbook

case studies report on the experiences of particular localities in the application of various new management techniques, these presentations provide only limited opportunity for the student to work through problem situations and to experience first-hand the "discovery of application." Numerous "war stories" also can be drawn from the firing-line experiences of urban management practitioners. These anecdotal materials, however, seldom provide the necessary content to be used for instructional purposes.

As a consequence, new concepts and techniques in the field of urban management are either presented in the abstract, leaving students and practitioners to their own devises to discover potential applications, or are discussed as fait accomplis, providing little opportunity to discern the internal problem-solving mechanisms employed in the application of these techniques. The recalcitrance among public service personnel regarding the use of new methods often stems from the lack of tangible examples of application. A fundamental objective of this curriculum development project, therefore, is to provide a vehicle to assist in circumventing these impediments to fuller application of public management concepts and techniques.

Module Focus and Approach

This curriculum module, the tenth in a series prepared by the staff of the Center for Urban and Regional Studies at Virginia Tech, focuses on techniques for policy/program implementation as a component in the process of Policy Analysis and Evaluation. The module consists of instructional materials and a series of four case studies and related scenario problems that focus on some of the critical issues of implementation and evaluation in the public sector.

The instructional materials in this module are based, in part, on a new textbook by the module authors entitled PERFORMANCE ADMINISTRATION. This text, along with several other books cited in the accompanying bibliography, serve to further elaborate the points discussed in these instructional materials.

The case study/scenarios illustrate critical steps in the procedures and techniques of policy/program implementation and cover the following topics:

(1) Formulation of an Implementation/Evaluation Plan (Chapter 3)

(2) Policy/Program Renegotiation Procedures (Chapter 3)

(3) Operations Planning and Control Techniques (Chapter 4)

(4) Project Duration Constraints (Chapter 4).

A series of shorter exercises is provided in Chapter 4 to illustrate various phases of the Critical Path Method, including the formulation of arrow networks, personnel scheduling, and estimating time durations.

The case studies are drawn from real-world situations suggested by the experiences of urban management practitioners. Each case study provides closure on a problem situation, illustrating a given set of concepts, methods, and/or techniques that participants will require to solve the associated scenario problems. Basic concepts also are discussed in the instructional materials to clarify the application of particular techniques. Of necessity, certain abstractions have been made in the case studies so that they will be manageable within a workshop/seminar format.

The scenarios build upon the case studies (utilizing data, assumptions, situational and contextual factors, etc.). These scenarios require additional participant inputs beyond the case study, however; i.e., they involve more than the mere mechanical application of techniques outlined in the case studies. One obvious component of the scenario problems would involve an analysis and critique of the assumptions and methodologies applied in the case studies.

Each case study/scenario and exercise includes an "instructional guide" that outlines the basic objectives covered, identifies relevant supporting information with which the participants should be familiar, and as appropriate, provides a solution or range of possible solutions to the scenario problem. These instructional guides may be distributed separately after the conclusion of the discussion on the scenario problem or may be used as part of that discussion.

Instructional Assumptions

The case study/scenarios are designed to be used primarily as part of a short course/workshop in conjunction with in-service training programs for public managers and local government officials. The module represents 16 to 24 didactic hours, the time duration depending on the pre-workshop reading of instructional materials that may be done by the participants. The modules may be used in concert with an intensive lecture/seminar format that combines a high level of participant input within a fairly structured learning environment. These instructional materials would also have application in public administration and urban affairs curricula at the upper division undergraduate and at graduate levels.

The case study/scenarios can be combined in various ways in accordance with participant needs. They are also adaptable to a variety of presentation formats (e.g., a series of relatively short in-service workshops spread over several months, more intensive training institutes, perhaps used in combination with materials from other modules in this series, quarter or semester long credit courses, etc.). The case studies and scenarios can also be used in conjunction with the instructional materials as a "self-study" package by individuals. Practitioners might find application of the case study/scenarios, independent of any formal instruction, to demonstrate the utilization of particular management techniques, as for example, to provide a "walk through" experience for members of city council and state legislatures.

In short, while the materials are designed primarily for use in conjunction with an instructor/facilitator, they are sufficiently self-contained to be applied in several other contexts, including use as "self-study" materials. Instructors using these materials in more formal workshop or classroom settings should have some knowledge of capital facilities planning and debt administration procedures, as well as broader applications of public budgeting techniques (the subject of curriculum module 6 in this series). Expertise in these areas is not assumed, however, and an instructor should be able to gain sufficient familiarity with these basic concepts by consulting the various textbooks listed in the accompanying bibliography and endnotes.

No special equipment or reference materials are required beyond that which is provided in the curriculum package, aside from the desirability to have small electronic calculators available for participants to work out portions of the scenario problems (such calculators that have a memory and reciprocal function are advised). If used in conjunction with an academic course, many of the computational routines are adaptable to computer operations. Repetitive computations can be derived from the instructional guides, however, to facilitate the use of these materials in more intensive workshop sessions (i.e., participants may be required to set up the problem for solution without having to work through all of the calculations).

Module Audience

The primary audience for these case study/scenarios and supporting instructional materials will be urban managers--city managers, urban county administrators, department heads, planning staff members, and other similar public service personnel with responsibilities for policy and program implementation and evaluation (and degree candidates preparing for such public service careers). The materials could also be used in conjunction with in-service career development programs. And as suggested above, they may also prove useful as "briefing mechanisms" for elected and appointed officials.

SUMMARY OF MODULE COVERAGE

Following this overview, chapter two provides a brief review of the available literature on implementation in the public sector. A distinction is made in this discussion among the various approaches adopted by different disciplines, including descriptive studies, evaluation research, feasibility analysis, and control strategies. A conceptual framework of the various indices of implementation is offered to provide a further focus to these diverse contributions.

Chapter three examines the general characteristics of evaluation procedures and describes the various comparative techniques that are available for program monitoring and evaluation. A discussion of the concepts of strategic planning (the focus of the first curriculum module in this series) and policy renegotiation provides an "Alpha/Omega" focus for these techniques.

Chapter four is devoted to the concepts and techniques of operations planning, scheduling, and control as critical components of program management. The evolution of network analysis techniques and applications of the Critical Path Method (CPM) and Program Evaluation Review Techniques (PERT) provide a major focus for this discussion. Problems of uncertainty in the estimating of time durations and personnel requirements and principles of program management and control lead to the case study and scenario that concludes this chapter.

The final chapter provides a brief examination of implementation in the context of administrative reforms. Emerging concepts such as Zero-Base Budgeting and Sunset Legislation are discussed within this perspective. The point that serves as a guiding principle in all of the curriculum modules is reiterated in this final chapter. That is, while reform strategies and analysis techniques will come and go, a "mixed bag" of workable devices may well endure. It is our central goal to suggest a range of such devices from which such workable approaches might emerge.

BIBLIOGRAPHY

Adams, Bruce. "Guidelines for Sunset," State Government. Summer, 1976.

Adams, Bruce. "Sunset: A Proposal for Accountable Government," Administrative Law Review, Volume V. Summer, 1976.

Bittel, Lester. Management By Exception. New York: McGraw-Hill Book Company, 1964.

Brady, Rodney H. "MBO Goes to Work in the Public Sector," Harvard Business Review. Volume LI. March-April, 1973.

Bunker, Douglas. "Policy Sciences Perspectives on Implementation Processes," Policy Sciences. Volume III. March, 1972.

Cortner, Harold F. Administration in the Public Sector. New York: John Wiley & Sons, 1977.

Dalkey, Norman, et al. Studies in the Quality of Life: Delphi and Decision-Making. Lexington, Mass.: D. C. Heath and Company, 1972.

Dermer, Jerry. Management Planning and Control Systems: Advanced Concepts and Cases. Homewood, Ill.: Richard D. Irwin, 1977.

Finsterbusch, Kurt and C. P. Wolf. Methodology for Social Impact Assessment. Stroudsburg, Pa.: Dowden, Hutchinson, and Ross, 1977.

Frederickson, George and Charles Wise, editors. Public Administration and Public Policy. Lexington, Mass.: D. C. Heath and Company, 1977.

Hargrove, Erwin. The Missing Link: The Study of Implementation. Washington, D. C.: The Urban Institute, 1975.

Hatry, Harry P., et al. Practical Program Evaluation for State and Local Government. Washington, D. C.: The Urban Institute, 1973.

Hatry, Harry P., et al. Program Analysis for State and Local Governments. Washington, D. C.: The Urban Institute, 1976.

Hawley, Willis D. and David Rogers, editors. Improving Urban Management. Beverly Hills, Calif.: Russell Sage Foundation, 1976.

Hayward, Nancy. "The Productivity Challenge," Public Administration Review. Volume XXXV. September/October, 1976.

Homan, Herbert, et al. "Therapy for an Ad Hoc Budget," Governmental Finance. August, 1976.

Horton, Raymond. "Productivity and Productivity Bargaining in Government," Public Administration Review, Volume XXXV. July/August, 1976.

Kopel, Gerald. "Sunset in the West," State Government. Summer, 1976.

Pressman, Jeffrey and Aaron Wildavsky. Implementation. Berkeley: University of California Press, 1973.

Quade, E. S. Analysis for Public Decisions. New York: American Elsevier, 1975.

Roethlisberger, Fritz J. Toward A Unified Theory of Management. New York: McGraw-Hill Book Company, 1964.

Rodgers, Joseph L. Citizen Committees: A Guide to Their Use in Local Government. Cambridge, Mass.: George Ballinger, 1977.

Schick, Allen. "Zero-Base Budgeting and Sunset," The Bureaucrat. Volume VI. Spring, 1977.

Starling, Grover. "Implementation: The Achilles' Heel of Program Management," in Managing the Public Sector. Homewood, Ill.: Dorsey Press, 1977.

Taylor, Graeme M. "Introduction to Zero-Base," The Bureaucrat. Volume VI. Spring, 1977.

Taylor, William and Thomas Watling. Practical Project Management. London: Business Books, 1973.

U. S. General Accounting Office. Standards for Audit of Government Organization. Washington, D. C.: Government Printing Office, 1972.

Van Meter, Donald and Carl Van Horn. "The Implementation Process: A Conceptual Framework," Administration and Society. Volume VI. February, 1975.

Webb, Kenneth and Harry P. Hatry. Obtaining Citizen Feedback. Washington, D. C.: The Urban Institute, 1973.

Weiss, Carol H., editor. Using Social Research in Public Policy Making. Lexington, Mass: D. C. Heath and Company, 1977.

Wholey, John S., et al. Federal Evaluation Policy: Analyzing the Effects of Public Programs. Washington, D. C.: The Urban Institute, 1970.

Wildavsky, Aaron. The Politics of the Budgetary Process. Boston: Little, Brown and Company, 1964.

Williams, Walter and Richard F. Elmore, editors. Social Program Implementation. New York: Academic Press, 1976.

Wooldridge, Blue E. Systematic Planning and Program Implementation. Washington, D. C.: National Training and Development Service, 1977.

CHAPTER 2

POLICY/PROGRAM IMPLEMENTATION PERSPECTIVES IN SEARCH OF PROCEDURES

The flaw in so many statements of public policy is that they fail to clearly designate areas of responsibility for their effectuation. Public policy will not become effective unless action commitments have been built in from the start. In fact, no decision has been made unless its implementation has become someone's specific work assignment. Until this is accomplished, public policy is little more than a pronouncement of good intentions.

Converting policy into action requires that several distinct questions be answered: (1) Who has to know of the policy decision? (2) What action has to be taken? (3) Who is to take it? (4) What does the action have to be so that the people who have to do it can do it? The first and last of these questions too often are overlooked--with dire consequences. Action commitments must be appropriate to the capacities of the people who have to carry them out. This caveat becomes doubly important when people have to change their behavior, habits, or attitudes if a policy is to become effective. Care must be taken not only to see that the responsibility for action is clearly assigned, but also that the people assigned are capable of carrying it out. Measurements, standards for accomplishments, and incentives associated with the proposed action must be changed simultaneously with the introduction of the policy.

THE LITERATURE ON IMPLEMENTATION

As a few scholars and perhaps most practitioners are well aware,[1] the implementation of public policies and programs is the least understood element in the public policy-making process. The literature available perhaps does more to magnify than to clarify this confusion. Much of what is labelled as policy/program implementation in the literature of public administration and political science consists of either descriptive studies of programmatic failures or general procedures for the evaluation of policies and programs once they have been implemented. Succinct guidelines or procedures for program implementation are to be found only in scattered, case-specific examples. This lacuna in techniques may be explained, in part, by the prevalence of the following conditions:

(1) The concern among social scientists for policy analysis in general and implementation in particular is a fairly recent phenomenon.

(2) Many diverse academic (disciplinary) perceptives and practitioner orientations have been generated without concern for conceptual integration.

(3) In some circles, an artificial dichotomy has been maintained between policy development/planning/analysis and program/project management, with implementation thought to be part of the management domain.

These problems notwithstanding, many valuable insights for the program manager can be culled from the literature. The purpose here is to provide a brief review of the types of contributions available and to place them within a conceptual framework where it may be possible to visualize their relevance to the indices of practical implementation.

While a variety of approaches has been developed to examine the concept of implementation, generic categories might be represented as follows:

(1) Descriptive/Explanatory Studies

(2) Evaluative Research

(3) Feasibility Analyses

(4) Control Strategies

While these approaches have different analytical objectives, they might all be redirected and perhaps coordinated to enhance the efficiency and effectiveness of public policies and programs.

Descriptive Studies

Descriptive studies, by and large, are the province of political scientists. Generally, these analyses entail elaborate case studies of macro-level policies, involving major national issues.[2] A landmark effort in this domain is the excellent assessment by Pressman and Wildavsky entitled: Implementation--How Great Expectations in Washington Are Dashed in Oakland.[3] The subtitle of this study--Or, Why It's Amazing that Federal Programs Work at All, This Being a Saga of the Economic Development Administration as Told by Two Sympathetic Observers Who Seek to Build Morals on a Foundation of Ruined Hopes--encapsulates the major thrust of this analysis, establishing the basic tone for descriptive/explanatory inquiries--the illustration of programmatic failures. This somewhat negative perspective need not be mere sophistry. Descriptive studies may provide many valuable lessons for the program manager.

Pressman and Wildavsky--in their account of a small fragment of the Great Society disillusionment--furnish insights into the origins of policy pitfalls. They describe how the efforts of the Economic Development Administration to generate employment opportunities in Oakland, California were rather ill-conceived and ad-hoc responses to the racial violence of the sixties. They explain how other reluctant agencies virtually halted the delivery process (in the first three years, nearly $15 million was spent to produce 50 permanent jobs).

Moreover, Pressman and Wildavsky portray the various overlapping review and clearance procedures as Rube Goldberg apparatus. Overall, this study provides a handy set of clues to the program planner or manager which might be summarized in the following admonitions:

(1) Seek a concise statement of program objectives.

(2) Avoid the involvement of several agencies in the implementation process.

(3) Set forth clear and simple lines of communication and execution.

(4) Allow for strategic renegotiations, but avoid frequent unplanned alterations.

Suggesting that descriptive studies are instructive, however, does not imply that they are all-inclusive. Rarely do such studies render discrete guidelines for successful implementation, and their general focus upon macro-level policy issues may fail to encompass the concerns of local program managers.

Evaluation Research

Effective implementation of public policy and delivery of public services require more than the discovery and effectuation of a "best" course of action. A basic aspect of the policy-making process is the development and application of a monitoring and evaluative capacity to measure the outcomes under operating conditions, to determine if the policy or program is accomplishing the intended results, and to identify changing conditions that might necessitate modifications in the selected course of action. Although program evaluation has had a fairly long history in the fields of medicine and education, these procedures have only recently come into general prominence with the widespread development of new social programs and a parallel recognition by public officials of the need to determine the positive and negative impacts of these social experiments. Federal legislation now requires the establishment of evaluative procedures, and funds are provided in most federal programs to support such activities.

Program evaluations often are similar to descriptive inquiries in that they frequently rely upon a case study format. When they do, the primary distinction would be that evaluations involve ongoing programs and projects rather than ex-post-facto assessments. In the literature of public administration, the discussions of implementation and evaluation often are muddled. While they are distinct processes, a portion of the muddle may result from the following commonalities:

(1) Evaluations largely focus upon the procedures of implementation as opposed to the procedures of policy formulation.

(2) Techniques developed to aid implementation are also designed to facilitate evaluation (e.g., PERT and CPM).

(3) Strategic evaluations, conducted during the implementation of long-term programs, may produce modifications in the implementation process.

Therefore, while the study of evaluation is not synonymous with the study of implementation, they are by no means mutually exclusive. Careful and systematic evaluations are integral to the attainment of improvements in the procedures of implementation.

The basic purpose of evaluation is to distinguish effective policies and programs from ineffective ones. Approaches to this differentiation vary widely, and full blown, scholarly based evaluations are very different from those carried out on a day-to-day basis by program managers and auditors. Generally speaking, state and local officials rely heavily upon the post-audit or financial compliance evaluation which merely ensures that dollars were spent appropriately as opposed to effectively . Under federal pressure, however, more localities are adopting the performance audit an inquiry into financial efficiency and effectiveness .[4] The primary focus, however, still remains on efficiency rather than effectiveness. On those occasions when academicians and/or professional consultants (e.g., think tanks) are called upon to evaluate on-going programs, effectiveness (both economic and social) is normally the focal point, and policy experimentation and more sophisticated techniques of Applied Social Research are likely to be utilized.[5] A prime example of this type of inquiry is the study by Mirongoff and Rindler of the impacts of the Comprehensive Employment and Training Act (CETA).[6]

There is a good deal to be learned from evaluation studies. With reference to the CETA study, for example, Hargrove points out the various implications of program structure discovered by Mirongoff and Rindler:

> CETA creates a much more tentative federal role, as compared to . . . the Manpower Development and Training Act of 1962. (CETA) reduced congressional incentives to oversee the program in regard to particular groups, and roots program planning and administration in whirlpools of state and local politics in ways that will surely affect who gets served and the manner of service delivery.[7]

Despite examples such as these, the evidence suggests that the evaluative enterprise (particularly Applied Social Research efforts) has had only slight impact on government operations.[8] One essential reason for this lack of utilization might be labelled the interface problem. As Robert Clark of the Community Services Administration contends:

> Evaluation stands as a potentially significant contribution to social policy formation. Unless, however, it is keyed to specific information requirements and decision-making schedules of those engaged in policy processes, it risks being irrelevant--a monument to what might have been.[9]

This interface problem is likely to ameliorate somewhat as the demand for more sophisticated measures of effectiveness increases (particularly those involving the quality-of-life and social well-being) and as social researchers gain more experience with short-term, tightly focused, practical program evaluations.[10] Pressures for these refinements are likely to emerge with the implementation of various federal statutes and state level "sunset laws."[11]

Feasibility Analysis

The study of implementation feasibility is relatively new. It was developed in response to the realization that the very best planning, analysis, and budgeting are wasted if the chosen policy alternative cannot be implemented. Thus, feasibility analysis attempts to forecast the relative problems and potentials of alternatives prior to programmatic commitment. This approach entails an examination of the various social, political, and organizational constraints. Harry Hatry et al. provide the following list of questions raised in the pursuit of "Implementation Feasibility":[12]

(1) How many agencies, both internal and external to the government, must cooperate or participate in order to ensure successful implementation?

(2) To what extent does the alternative directly affect services in a way clearly visible to the public? Are there existing client groups whose interests will be affected, particularly by a cutback in existing services?

(3) To what extent does the alternative threaten important officials by reductions in power, prestige, or privileges?

(4) To what extent does the alternative threaten jobs?

(5) To what extent are special personnel capabilities required?

(6) To what extent does the alternative require changes in the behavior of governmental employees?

(7) Are the sources of funds and their availability fairly definite? To what extent does the alternative call for added amounts of funds in the face of tight revenue constraints?

(8) Are there complicated legal questions, and if so, are changes such as new legislation required? What is the likelihood that these changes would be made?

(9) To what extent has public debate galvanized opinions for or against an alternative?

(10) To what extent does the alternative require space or facilities that may be difficult to obtain?

(11) To what extent does the alternative involve significant technological uncertainties?

(12) Has a recent crisis lent support to one of the alternatives?

Hargrove suggests that these types of questions should become the nexus of implementation inquiries. Data from case studies and program evaluation could be compiled and a "taxonomy of implementation problems" constructed.[13] Quite obviously, such a catalog of issues for various policy areas would aid program managers, and feasibility analysis, in general, would enhance the possibility of successful implementation.

Control Strategies

Operations Planning and Control Systems have been developed and refined in the fields of business administration and management science. While not totally applicable to the public sector, many aspects of these control strategies provide added illumination to the improvement of policy/program implementation.

The key to control in the private sector is planning--often a continuous process in business and industry. Operations are initiated through a form of strategic planning (e.g., market forecasting), transformed into detailed assignments and commitments through management planning, and held on track by operations planning and control. Control systems close the planning loop by ensuring that action commitments are maintained and objectives realized. Dermer describes the control process as involving the following steps:[14]

(1) Determine if a problem exists by collecting information about expectations and actual performance, and then compare them.

(2) Generate alternative courses of action that will eliminate or minimize the deviation between actual and expected performance.

(3) Evaluate alternative courses of remedial action available and select the appropriate one.

(4) Ensure that the appropriate action did actually close the gap between actual and expected performance.

While these steps sound relatively simplistic, in application they may involve many complex procedures to manage, manipulate, and motivate men, machinery, and money in the pursuit of predetermined ends.

The following represent some of the more common control devices developed in business and industry:[15]

(1) Value Analysis: techniques to ensure (that operations are more cost-effective)?

(2) Network Analysis: techniques, including PERT and CPM, which facilitate the planning, scheduling, and coordination of operations to ensure that events will occur in the proper sequence and with

minimum slack time; these techniques provide vital data on actual performance versus expected performance.

(3) Bar Charts and Time-Line Diagrams: simplified forms of networking through which interrelated tasks are graphically displayed.

(4) Line of Balance (LOB): a technique which measures operational outputs and compares them with forecasted completion times and quantities.

These techniques, of course, are most applicable to the less difficult tasks of operations planning and control. The more troublesome aspects of control involve the motivation of individuals within organizations to achieve certain ends or means to these ends. Here too, business administration has done much to advance the art of successful implementation. Several strategies designed to clarify and engender commitment to organizational goals (e.g., Management By Objectives) find their origins in the private sector.[16]

Public sector employees have been less than enthusiastic about accepting rigorous control systems.[17] Moreover, political interests often take exceptions to mechanisms that tend to modify their fundamental power base. There also is the inherent danger that control systems will create an ever-increasing need for greater control. Roethlisberger contends that: "the breakdown of rules begot more rules to take care of their breakdown or the breakdown of close supervision and as a result, the continuous search and invention of new control systems to correct the limitations of the previous ones."[18]

Whether or not these concerns are completely valid, the literature on public sector productivity attests to the fact that both motivation and performance measurement are very different in public organizations.[19] Nevertheless, the contributions of business administration and management science have yet to be fully realized in the study and improvement of public policy implementation.

A CONCEPTUAL FRAMEWORK

In reference to the general goal of improving the implementation of public programs, all of the approaches discussed thus far exhibit considerable promise. A more generic and unified approach, however, seems to be called for. Such an approach should provide both a conceptual framework of the implementation process by demonstrating linkages between the realms of inquiry and indices relevant to the selection, initiation, and completion of the public programs.

Indices of Implementation

Of late, several conceptual models of public policy implementation have emerged.[20] Generally speaking, these models share a common concern for the following elements:

(1) Policy goals, objectives, and action commitments.

(2) Socio-political supports, constraints, and opportunities.

(3) Fiscal and physical resources.

(4) Level and technological and/or administrative uncertainty.

(5) Number, configuration, and characteristics of implementing agencies.

(6) Pre-disposition of the implementors.

(7) Performance criteria.

(8) Evaluation procedures.

(9) Adaptability procedures.

(10) Mechanisms of accountability.

The continuous planning process of the private sector might be invoked in order to conceptualize the relationships among these indices and available information sources (see Figure 1). Initially, program managers should engage in a feasibility analysis in order to determine socio-political constraints associated with the programmatic alternatives. Lacking the time and resources to launch full-blown analyses of alternatives, managers often must rely upon the results of previous strategic planning efforts and the information provided by evaluations and descriptive inquiries that deal with similar policy issue areas. These data and analyses should provide important clues to necessary strategic renegotiations of the program format.

In the actual program development and budgeting stage (management planning), insights from the feasibility analyses, descriptive inquiries, and evaluations should be linked to control strategies. Information on organizational behavior also should be generated in this stage. The emerging control patterns should then carry over into the actual programmatic deployment stage (operations planning and control systems). Meanwhile, accompanying evaluative procedures could be utilized to provide vital feedback on program performance and evolving objectives.

Conclusions

Such a conceptualization provides the basic skeletal framework to which the results of analysis (if timely, concise, and generally applicable) could be attached. The most essential item with regards to such a framework is the recognition that implementation is an on-going process of analysis which should be initiated along with the formulation of policy alternatives. In essence, implementation is not merely a set of procedures tacked on the end of the programmatic process. Continuous planning and analysis are required to ensure the integrity of societal objectives. This central theme will underlie the following chapters which deal with specific planning and analytical techniques and their relationship to other management processes.

Figure 2-1. A Framework of Implementation.

Elements of Policy/Program Development and Executive	STRATEGIC PLANNING	MANAGEMENT PLANNING	OPERATIONS PLANNING AND CONTROL
INDICES OF IMPLEMENTATION	Goals, objectives and Action Commitments Socio-Political supports, Constraints, and opportunities	Fiscal and physical resources Technological and Administrative Uncertainty Number, configuration and characteristics of implementing agencies Pre-dispositions of implementors	Performance criteria Evaluative procedures Adaptability procedures Accountability mechanisms
REALMS OF INQUIRY	Feasibility Analysis Descriptive Studies Evaluative Research	Control Strategies	Evaluative Research

ENDNOTES

[1]Erwin Hargrove, The Missing Link: The Study of Implementation, (Washington, D.C.: The Urban Institute, 1975); also note: Harry Hatry, et al. Program Analysis for State and Local Governments (Washington, D.C.: The Urban Institute, 1976), pp. 97-98; Erwin Hargrove, "Implementation," in H. George Frederickson and Charles Wise, editors, Public Administration and Public Policy (Lexington, Mass.: D.C. Heath, 1977), pp. 3-15; Grover Starling, "Implementation: The Achilles' Heel of Program Management" in Managing the Public Sector (Homewood, Ill.: Dorsey Press, 1977), pp. 228-231; and Walter Williams, "Implementation Analysis and Assessment," in Walter Williams and Richard F. Elmore, eds. Social Program Implementation (New York: Academic Press, 1976), pp. 267-292.

[2]Note for example: Jefrey Pressman and Aaron Wildavsky, Implementation (Berkeley: University of California Press, 1973); Martha Derthick, New Towns in Towns (Washington, D.C.: The Urban Institute, 1972); and the excellent case studies in Williams and Elmore, op. cit.

[3]Ibid.

[4]Current usage and improvements in performance auditing is the topic of Module number 9 of this HUD/NTDS package.

[5]For an excellent set of essays on the current "state of the art" of Social Assessment, see: Kurt Finsterbusch and C.P. Wolf, Methodology for Social Impact Assessment (Stroudsburg, Penn.: Dowden, Hutchinson, and Ross, 1977).

[6]William Mirengoff and Lester Rindler, The Comprehensive Employment and Training Act: Impacts on People, Places, and Programs (Washington, D.C.: National Academy of Sciences, 1976); for a series of local level examples see: Harry Hatry, et al., Practical Program Evaluation for State and Local Government (Washington, D.C.: The Urban Institute, 1973).

[7]Erwin Hargrove, "Implementation", in H. George Frederickson and Charles Wise, Public Administration and Public Policy (Lexington, Mass.: D.C. Heath, 1977), pp. 11-12.

[8]There are several excellent discussions of this lack of utilization in Carol H. Weiss, ed. Using Social Research in Public Policy Making (Lexington, Mass.: D.C. Heath, 1977); also note: Genevieve Knezo, "Social Indicators and the Legislative Process," and Harrison Fox, et al., "Evaluation Research and Congressional Oversight" (Papers presented at the Conference of the American Association for the Advancement of Science, Denver, 1977).

[9]Robert F. Clark, "Policy Implementation: Problems and Potentials" (Paper presented at the Conference of the Southern Political Science Association, Atlanta, Georgia, 1976), p. 2; also note: Robert F. Rich, "Uses of Social Science Information by Federal Bureaucrats: Knowledge for Action versus Knowledge for Understanding," in Carol H. Wise, op. cit., pp. 199-212.

[10]Note once again the examples provided by Hatry et al., Practical Program Evaluation for State and Local Government (Washington, D.C.: The Urban Institute, 1973).

[11]See: U.S. General Accounting Office, Standards for Audit of Government Organizations (Washington, D.C.: Government Printing Office, 1972); for a discussion of "Sunset" see: Benjamin Shimberg, "The Sunset Approach," (Address before the Western Regional Council of Governments, Salt Lake City, July 23, 1976); also note: Bruce Adams, "Sunset: A Proposal for Accountable Government," Administrative Law Review, V (Summer, 1976).

[12]Harry Hatry, et al., Program Analysis for State and Local Governments (Washington, D.C.: The Urban Institute, 1976), pp. 100-101; it is noteworthy that similar questions are often raised in the issue analysis stage of systematic analysis and that Hatry et al. are actually suggesting a more formalized rather than completely unique approach. See for example the discussion of "Issue Papers" in E.S. Quade, Analysis for Public Decisions (New York: American Elsevier, 1975), pp. 68-74.

[13]See: Edwin Hargrove, The Missing Link: The Study of Implementation (Washington, D.C.: The Urban Institute, 1975), p. 24.

[14]Jerry Dermer, Management Planning and Control Systems: Advanced Concepts and Cases (Homewood, Ill.: Richard D. Irwin, 1977), p. 14; also note: Lester Bittel, Management By Exception (New York: McGraw-Hill, 1964).

[15]For a more elaborate discussion of these techniques see: William Taylor and Thomas Watling, Practical Project Management (London: Business Book, 1973).

[16]See: Rodney H. Brady, "MBO Goes to Work in the Public Sector," Harvard Business Review, LI (March-April, 1973).

[17]Note: Harold F. Cortner, Administration in the Public Sector (New York: John Wiley and Sons, 1977), pp. 162-163.

[18]Fritz J. Roethlisberger, Toward A Unified Theory of Management (New York: McGraw-Hill, 1964), p. 54.

[19]Note: Raymond Horton, "Productivity and Productivity Bargaining in Government," Public Administration Review, XXXV (July/August, 1976); and Nancy Hayward, "The Productivity Challenge," Public Administration Review, XXXV (September/October, 1976).

[20]Note for example: Douglas Bunker, "Policy Sciences Perspectives on Implementation Processes," Policy Sciences, III, No. 1 (March, 1972); Donald Van Meter and Carl Van Horn, "The Implementation Process: A Conceptual Framework," Administration and Society, VI, No. 4 (February, 1975); Blue Wooldridge, Systematic Planning and Program Implementation (Washington, D.C.: National Technical Development Service, 1977).

CHAPTER 3 EVALUATION AND IMPLEMENTATION

As has been suggested, evaluative studies often are confused with inquiries into the effective implementation of public programs. This mistaken identity is understandable given the similarity of objectives, i.e., the discovery of methods and procedures to ensure that a program or project remains on track in achieving some predetermined level of accomplishment. Until recently, however, most evaluations were of relatively little use to persons responsible for the implementation of programs, or to anyone else for that matter. Many evaluations have been conducted after a program has been completed, and therefore, are useful only if the program is repeated (or to provide a historic/academic record of the program's failures).

Increasingly, however, program evaluations are being conducted on a scale and in a timeframe conducive to inclusion in the implementation process. Moreover, there is increasing concern for linking operational strategies with periodic assessments. These types of evaluations have been labeled "Practical Program Evaluation", for they attempt to meet the more pragmatic needs of the program manager/implementor.[1]

GENERAL CHARACTERISTICS OF EVALUATION

The procedures of evaluation involve a systematic examination of specific activities of government to provide information on the short and long term effects of public policies and programs. These procedures seek to provide a basis for determining whether a specific policy is achieving the desired objectives, or a specific program is operating as planned--and equally important, how well the public is being served.

Wholey offers a procedural definition of evaluation[2] by suggesting that it:

(1) assesses the <u>effectiveness</u> of <u>on-going</u> programs in achieving their objectives;

(2) relies on the principles of research design to distinguish the effect of a program from those of other forces operating in the broader environment; and

(3) aims at program improvement through modification and adjustment (strategic renegotiation) rather than the formulation of new policies and programs.

Herbert also offers some general characteristics of policy or program evaluation, as follows:[3]

(1) Evaluation is more concerned with questions of effectiveness than efficiency.

(2) Evaluation is oriented toward the assessment of goals, output, and performance.

(3) The primary focus of evaluation is on existing programs (through feedback on current and previous activities), although it may be used in an experimental or demonstration mode.

(4) Evaluation is the critical link between programs or administrative operations and the planning process.

(5) Its findings are useful in planning future programs or in modifying existing ones.

(6) Evaluation provides "objective" information to program managers and policy-makers on the effects and costs of programs and projects and identifies major problems or strengths associated with them.

While policy or program analysis tends to be prospective, evaluation focuses on the actual past performance of on-going or completed programs. It is not completely retrospective, however, for the purposes of evaluation often may be to suggest changes in resource allocations, to improve current operations, or to plan future activities.

> The key element that leads us to distinguish evaluation from say, the cost-effectiveness or cost-benefit of a proposed program is that the latter do not have to cope with an activity that is on-going and thus the people participating in or being affected by the activity. People interact with an evaluation in ways that must be taken into account by the analysts.[4]

In short, policy analysis and policy evaluation constitute an <u>iterative cycle</u>--analysis preceding policy and program commitments and evaluation assessing the impacts and effectiveness of these decisions and commitments.

Output Orientation of Evaluation

Evaluation concentrates on the <u>change impacts</u> (both positive and negative) resulting from governmental activities. It is an assessment of the outcome of a program or policy--what happened that would not have happened in its absence. It examines the relative effectiveness of programs or activities--what projects or types of projects work best under what operational circumstances. Consequently, evaluation should assist public officials and management personnel in determining whether a policy or program should be continued as is, be expanded, modified, reduced, or be eliminated. If a program is not performing as anticipated, an evaluation may help to indicate reasons for ineffectiveness and suggest actions that might be initiated to remedy the situation.

Evaluation shifts the emphasis away from the "input orientation" of traditional programmatic activities in the public sector (which has been

institutionalized in budgetary procedures that focus on the resources necessary to support public programs) toward an "output orientation". This output focus first became widely discussed in connection with performance budgeting and more recently, has become a principal component of program budgeting.[5]

Auditing and Performance Monitoring

While program evaluations may include consideration of workload measures, unit cost data, operating procedures, or staff efficiency, these evaluations of management procedures characteristic of performance budgeting more recently have come to be known as organizational or operational audits. When undertaken to assess the overall efficiency of particular on-going agency activities, these operational audits may involve the development of productivity measures to be applied in longitudinal studies.[6]

A distinction should be made between evaluation and the more traditional post audit. Conventional post auditing procedures seek to check the legality and propriety of financial transactions and to ensure that expenditure ceilings (set in the budget or other directives) are not exceeded. The post audit does not provide the program manager or decision-maker with an assessment of accomplishment; it deals primarily with inputs rather than outputs. Furthermore, the post audit tends to be backward-looking in attempting to place blame for administrative transgressions (it may serve as a deterrent in preventing some abuses from happening).[7] Evaluations, on the other hand, are (or should be) primarily forward-looking, assisting management in making decisions as to what to do next.

In recent years, the term performance audit has been coined to refer to efforts to extend the traditional and necessary audit of financial operations for fidelity, legality, and accuracy to encompass the assessment of achievement of management objectives.[8] A performance audit has been defined by the Comptroller General of the United States to include three elements: (1) financial compliance, (2) economy and efficiency, and (3) program results.[9] The first of these elements--financial compliance--embraces the traditional objectives of the post audit. Economy and efficiency focus on an assessment of resource utilization practices, seeking to determine if the program has been managed in an economical and efficient manner, and an examination of the adequacy of management information systems, administrative procedures, and organizational structure. In this respect, the second element of a performance audit is similar to an operational audit. The examination of program results seeks to determine whether the desired results or benefits were achieved, whether the objectives were met, and whether the agency has considered alternatives that might yield the desired results in the future at lower costs. This last element closely parallels the component objectives of program evaluation. However, a performance audit generally is undertaken after a program or project has been completed or has reached a major milestone in its funding, whereas program evaluation is usually applied to on-going programs.

Effectiveness status monitoring (ESM) represents a special type of program evaluation. The objective of ESM is to provide a more continuous basis (at least annually) for the review and evaluation of the general effectiveness of major program responsibilities of government--health, safety, fire protection, recreation, waste collection and disposal, and so forth. While program evaluation attempts to identify the specific effects attributable to a given public program or project, ESM concentrates on the related changes arising in the delivery of public services in general. Together, program evaluation and effectiveness status monitoring provide the fundamental components of a management information and program valuation system (MIPES).

In recent years, a number of governments have installed more comprehensive management information systems (MIS) to assist in the assessment of individual employee performance. Such information systems often are initiated in conjunction with the techniques of management by objectives.[10] An MIS provides a detailed record of the activities of public service personnel (often through weekly time and effort reports). It serves as a basis for comparing actual performance with a "plan of work", through which each employee describes what his or her accomplishments (activities) will be over some predetermined period of time. A management information and program evaluation system extends this approach by providing indices against which the aggregate accomplishment of staff activities can be assessed on a program basis. A MIPES includes performance criteria (goals and objectives) for the various program areas under the responsibility of particular agencies and assists in the evaluation of staff activities as they collectively contribute to the achievement of program objectives.

THE COMPARISON GAME

The basic purpose of evaluation is comparison. In an ideal situation, an evaluation would compare what "actually happened" with what "actually would have happened," had the policy or program not been implemented. The latter, of course, is impossible to determine exactly, but it can be approximated. With regard to ongoing implementation, the questions are more along the lines of "what is happening" as compared to "what should be happening." The "should" here encompasses assumptions about the relationship between program activities and original policy goals and objectives.

Hatry, et al. outline five basic types of program evaluation.[11] These include:

(1) Before-and-After Comparison;

(2) Time/Trend Projections of Pre- and Post-Program Data;

(3) Planned Versus Actual Performance;

(4) With and Without Comparisons; and

(5) Controlled Experimentation.

Each of these methods of evaluation begins and ends with the same procedural steps. The first step is to identify the relevant objectives of the policy or program under evaluation, and the corresponding evaluation criteria (measures of effectiveness). The major purpose of evaluation is to identify those changes in values in the criteria that can be reasonably attributed to the program or policy under study. A major problem, however, is that other factors, such as the simultaneous introduction of other related programs or unexpected external events, may have occurred during the time period covered by the evaluation. Thus, these other factors, and not the program or policy under evaluation, may have been the significant reason for the observed changes. Several approaches listed above include explicit provisions to control for at least some of these "exogenous factors". Nevertheless, in all cases the final step in the evaluation should include an explicit and thorough search for other plausible explanations for the observed changes, and if any exist, an estimate of their effects on the data.

Generally speaking, the methodologies become more sophisticated as one moves down the list of evaluative approaches. Hatry refers to the before-and-after approach as the "bargain basement" and to controlled experimentation as the "Cadillac" of program evaluation techniques. Yet it is noteworthy that methodological sophistication does not necessarily mean better evaluation. All of these approaches provide an adequate format; the quality of the assessment depends upon the strength (and comprehensiveness) of the indices developed and employed.

Before-and-After Comparisons

As the label suggests, this approach compares conditions in a given jurisdication or issue area at two points in time--immediately before a program or policy is introduced and at some appropriate time after its implementation. This method of evaluation is the simplest and least costly approach; it also is the most common, although it is least capable of separating other influences from the effect of program activities. It cannot screen for all non-programmatic effects or intervening variables; for example, maturation rather than a particular educational program could account for measurable improvements in student performance. This approach cannot be adequately applied to programs that have been in effect for several years or whose prior conditions cannot be determined accurately.

Before-and-after comparisons are useful under the following conditions:

(1) If initiated prior to the implementation of a program.

(2) If programs or projects are of fairly short duration and limited scope.

(3) If general conditions are expected to remain fairly stable.

Procedural steps in a before-and-after comparison are quite simple. After relevant objectives and corresponding evaluation criteria have been

identified, values of these criteria are obtained as they existed before the introduction of the program and for the period since the program's implementation. The assumption is that any difference between the "before" and "after" data were a consequence of the new program or policy. As noted above, particular attention should be given to any other plausible explanations for these changes.

Time/Trend Projections

Time/trend projections involve a comparison of actual post-program data with data resulting from a forecast or extrapolation of pre-program data. The extrapolations project the general conditions that would have prevailed had the policy or program not been implemented. Normally, a series of indices are generated from several intervals prior to implementation. Using standardized statistical techniques, natural changes in these indices can be forecast. Thus natural or non-programmatic changes can be differentiated from program induced changes. Yet, this approach has some obvious limitations:

(1) Factors prior to implementation must have been sufficiently stable to produce a noticable trend, and this stability must be expected to have continued.

(2) Statistical forecasting relies upon certain mathematical assumptions which may or may not be valid in all cases.

(3) The use of statistical techniques requires a certain level of expertise and additional data collection over the previous approach.

Comparisons of Planned Versus Actual Performance

This approach requires the establishment of specific goals or targets as the evaluation criteria for specific time periods, i.e., prior to the initiation of a program or policy a forecast is made of the expected results. Such a forecast usually can be generated from the justifications which accompany the choice of a particular programmatic alternative. Setting exact levels of expected performance or effectiveness measures, however, may be a difficult task. Targets should be established for specific achievement for specific time periods (e.g., stated as: "a 20% increase in college entrance scores among a particular group of students by the end of the third year of an educational enrichment program", rather than: "improvements in educational attainment"). This approach, like the initial before-and-after technique, provides no direct means of indicating the extent to which changes in values of the effectiveness criteria can be attributed solely to the new program or policy. As with other evaluative techniques, an explicit attempt must be made to search for other plausible explanations as to why the targets have been met, exceeded, or not met.

While state and local governments rarely utilize specific target type evaluations, implied performance levels often are present in the goal statements which accompany attempts at programmatic budgeting.

Thus, it is likely that this basic approach will grow in significance, particularly with the spread of program budgeting and/or zero base budgeting procedures and the emergence of "sunset laws" and similar periodic reviews of program/agency activities.

This approach requires that realistic goals or targets be established for the evaluation criteria. Such goal-setting may not be taken seriously if the evaluations are not used seriously (this, of course, is a problem with all evaluative techniques). If seriously applied, the establishment of targets is likely to become an important issue (a valuable spin-off of this approach). Higher level officials, as well as program managers, should participate in the establishment of these operational goals and objectives, and the targets should explicitly encompass all key program effects.

With and Without Comparisons

With and without comparisons represent a move toward more scientific evaluation procedures. This approach compares the values of evaluation criteria (indices) in a subpopulation where the program is on-going with indices gathered in a subpopulation not experiencing the program. The focal point, of course, is the differences that emerge between the two groups. This approach is well suited to a test or pilot program or similar situations where it is justifiable to only include a portion of the public that the program might eventually serve.

Having identified relevant objectives and corresponding evaluation criteria, as in the other approaches, it is essential to select similar areas of jurisdictions in which to implement and withhold the program. When indices of evaluation criteria are then developed (sometime after implementation) and compared, differences are assumed to be attributable to the program.

This approach seeks to guard against the assumption that all change is the result of the program implementation. Nevertheless, it is subject to a variety of constraints including the following:

(1) It may not be politically feasible (or desirable) to withhold the program from a segment of the population.

(2) Populations may be in such proximity that there may be uncontrolled "spillover effects" (both positive and negative) in the without population.

(3) Similarity between subpopulations may be highly subjective.

(4) To be most effective, this approach should be utilized in conjunction with some other approach, such as before and after, thus adding to the cost of the evaluation.

This approach introduces two elements of cost not included in previous approaches. Considerable effort may be required to identify comparable communities (or populations within communities). If communities are selected for particular combinations of characteristics or to insure that a similar program does not exist in the "without" communities, the costs may rise significantly. A second cost factor arises from the data collection necessary to support this approach. Since the type of data collected and the precision with which they are collected is likely to vary from community to community, the availability of comparable data may be severely limited. If the evaluation relies on standardized data sources (e.g., data collected and reported by some central agency), the cost of data collection may be relatively small. However, if special data collection efforts are required, the cost will be considerably higher.

Controlled Experimentation

The controlled experiment is by far the most "potent" approach to program evaluation; unfortunately, it also is the most difficult and costly to undertake. Basically it is a with and without comparison using two or more systematically selected groups or subpopulations. This approach is very effective as a pilot procedure or to test alternative levels of program application.

This approach may involve many technical steps of experimental design techniques which can become quite complex as related to a particular evaluation. The basic steps, however, are as follows:

(1) Identification of relevant objectives (goals) and corresponding evaluation criteria (effectiveness measures).

(2) Selection of groups to be compared, i.e., the control and experimental groups. Members of the population of interest (or a probability sample of that population) are usually assigned randomly to these groups; it is vital to select groups that have similar characteristics with regards to their likelihood of being effectively "treated" by the program.

(3) Measurement of the pre-program performance of each group using the selected evaluation criteria.

(4) Application of the program to the experimental group but not to the control group.

(5) Continuous monitoring of the operation of the experiment to determine if any actions occur that might distort the findings. If appropriate and possible, such behavior should be adjusted, or if not, at least identified and its impact on the eventual findings explicitly estimated.

(6) Measurement of post-program performance of each group using the selected evaluation criteria.

(7) Comparison of pre- versus post-program changes in the evaluation criteria of both groups.

(8) Search for plausible alternative explanations for observed changes, and if any exist, estimation of their efforts on the data.

Controlled experimentation is generally regarded as the more appropriate approach with redistributive programs or programs involving highly specified client groups (e.g., health, welfare, and rehabilitation programs). It is less appropriate to the provision of widespread public or merit goods and/or the assessment of large scale capital facilities.

This approach is also more useful if control and treatment groups can be split geographically. At the state level this is often feasible. For example, new crime prevention programs, solid waste collection procedures, programs of traffic control, and so forth might be (and often are) tried out and evaluated in a few areas before receiving widespread application. Areas with similar characteristics could be identified (relative to the program being introduced), and some of these areas would then be randomly designated as program recipients. If trends in the evaluation data before the new program was introduced were similar in all selected areas--but after the new program was operational, improvements were considerably greater in those areas with the program--considerable evidence would be provided for attributing the change to the introduction of the program.

This approach is not without its problems. These problems can make the observed results unrepresentative programmatic impacts. Such problems include:

(1) Members of an experimental group may respond differently to a program if they realize that they are being observed as part of an evaluation--commonly known as the "Hawthorne effect." Consequently, to assist in the reduction of this problem, it may be necessary to notify members of the control group that they too are part of an experiment.

(2) If the experimental group is only one part of a community, the responses to the program might differ significantly from what would be obtained if all parts of the community were receiving the benefits of the program, e.g., a new crime control program introduced into one part of a community may merely result in a shift in the incidence of crime to other parts of the community without any overall reduction in the rate.

(3) If persons are permitted to volunteer for membership in the experimental group, the two groups are not likely to be comparable. A self-selected group will probably be more receptive to the program and thus may not be typical of the whole target population.

(4) In some situations, political pressures may make it impractical to provide a service to one group in the community and not to others. This resistance is lessened where variations of programs are tested rather than using an "all or nothing" allocation of program resources.

(5) It may be considered morally wrong by some to provide a government service temporarily when the service could cause dependency among clients and make them worse off after the benefits are cut off.

(6) A problem arises from the administrative control of the service. While the use of a research group, as opposed to a service-oriented group, may minimize evaluation problems by maintaining the intent of the experimental design, such groups may not have a full understanding of service delivery problems.

(7) Controlled experimentation is, of course, more costly given: (a) the greater time required to plan, conduct, and analyze the data from the evaluation; and (b) the higher level of analytical and managerial skill required. This approach also implies certain indirect costs arising from the temporary changes in the way the program operates so that different types of program benefits will be attained by the experimental and control groups. Yet despite these difficulties, controlled experimentation provides a level of scientific exactitude to which evaluators and program managers should aspire.

Some General Methodological Issues

Decisions concerning governmental programs are inevitably made under conditions of considerable uncertainty. Evaluations can reduce uncertainty but cannot eliminate it totally. Even though it may be possible to isolate the effects of one program from others introduced at about the same time, it may be unnecessary to be overly concerned if the evaluation indicates significant benefits to the community.

The purpose of evaluation is to assist in guiding future actions and commitments. Even when an evaluation indicates with considerable certainty that a program or policy has a significant positive effect, changing conditions can re-open the issue of evaluation. For example:

(1) Where only partial implementation of a program is evaluated, the findings may not be fully applicable to full-scale implementation.

(2) Where special quality personnel (or special equipment) is used in the program being tested, but may not be available in the post-test period or for full-scale implementation, the degree of success may be due to these special capabilities and may not be fully obtainable in the future without them.

While the selection of an appropriate approach will depend on the timing of the evaluation, the costs and resources available, and the accuracy desired, it should be evident that these approaches are not "either-or" choices. These methods, in fact, often are used together. While the experimental approach provides the most precise evaluation, its cost and special characteristics result in it being used only on a selective basis. While the before and after method is very weak when applied alone, in combination with other approaches, it becomes much more useful. The planned vs. actual performance approach is very likely to come into its own as a result of pressures for such mechanisms as zero base budgeting and sunset laws.

OTHER CONSIDERATIONS AND CONSTRAINTS

Having extolled the virtues and vices of the above approaches, only a few generic considerations remain to be discussed briefly here. These are:

(1) Choosing the appropriate level of implementation;

(2) Strategic Planning and Measures of Program Quality;

(3) Socio-political constraints upon program evaluation.

These issues, while quite disparate, may provide further clues to the use of program evaluation in the implementation process.

Choosing the Level of Implementation

Decisions about the type of evaluation are, of course, very closely related to the type and level of implementation. As alluded to earlier, program managers should actually build mechanisms into their implementation procedures which will generate the types of evaluative indices required. The evaluative perspective may also effect choices about programmatic alternatives, and the level at which a program should be implemented. Scholars of federal programs contend that no congressman would agree to a pilot program if he had the political clout to obtain a full blown program.[12] State and local officials cannot afford to be so cavalier. Limited funds and high uncertainty about programmatic success may often lead to a "testing of the waters". In addition, with pilot studies it may be easier to justify a with and without format to those who end up "without". Pilot studies also facilitate experimentation with more than one programmatic alternative. However, pilots also have obvious drawbacks. These might include:

(1) Insufficient funding to produce programmatic impacts.

(2) A general lack of serious commitment on the part of those involved, given the trial balloon character of the program.

(3) An overemphasis on alternatives which would not be deserving of serious consideration if only one alternative were mandated.

In the final analysis, the appropriate level of implementation is quite often a subjective matter. The growing fiscal crisis for local governments would seem to dictate more caution in programmatic funding, yet local administrators can ill afford to test the waters indefinitely while particular groups in the community are drowning.

Strategic Planning and Measures of Program Quality

Irrespective of the format chosen, an evaluation will only be as good as the indicators or indices developed. Thus, the choice of performance measures is crucial. Performance measures should be integrated with linked to the social goals and objectives which prompted program

development and be reflective of both quantity and quality considerations. Performance and/or effectiveness measure thus harken back to the elements of "strategic planning" which initiated the policy process. Many of the same procedures used to discover and articulate public goals and objectives can be instrumental in establishing indices of the quality of public services. These indices in turn can be used to assess the effectiveness of public programs. Harry P. Hatry provides the following examples of just such indices:

(1) Intended purposes

(2) Negative effects

(3) Adequate quantities

(4) Equitable distribution

(5) Courtesy and respect

(6) Amount of citizen use

(7) Response time

(8) Perceived satisfaction

(9) Efficiency (productivity and economy).

There are a wide variety of particular techniques for measuring these types of indices. The following represent a few of the more prominent methods:

(1) Systematic Inspections of Quality Attributes with Physical Features--This technique usually involves the association of different levels of service with perceptual qualities. For example, rating streets based upon preselected photographs representing different levels of cleanliness as opposed to merely measuring the tons of garbage collected.[13]

(2) Citizen Surveys--This technique attempts to isolate citizen perceptions and attitudes regarding the quality of public services.[14]

(3) Policy Delphi and Fishbowl Planning--These techniques utilize multiple iterations with either policy experts or selected publics to rate the adequacy of public services and forecast alternative delivery systems.[15]

(4) Citizen Review Boards, Committees, and Councils--This technique involves selected citizens in a representative capacity. These committees can assess projects and programs on a range of criteria and can be instrumental in the development of additional indices.[16]

Hatry also points out that improved use or processing of existing data resources could greatly enhance perceptions of evaluative indices.[17]

As alluded to above, these various techniques for isolating citizen perceptions, amount of usage, willingness-to-pay, etc. may serve a dual role. Monitored early in the policy formulation process or in the "strategic planning" stage, they can guide decision-making and establish target levels useful in the evaluative process. Periodic monitoring can then provide vital information about the performance of public programs. In sum, Hatry suggests the following advantages to attempts at measuring the quality of public services:[18]

(1) They indicate problem areas.

(2) They provide vital feedback on the performance of newly initiated public programs.

(3) They assist in determining priorities, hopefully leading the appropriate allocation of public funds.

(4) They help evaluate management procedures and establish employee incentives.

(5) They permit greater community involvement in the guidance of government activity.

Socio-Political Constraints

It should be obvious to any public servant that a little bit of knowledge about the success or failure of a given program is a very dangerous thing. The first great commandment of bureaucracy is "don't pass on bad news." One of the more central reasons why early efforts at systematic evaluation (using applied social research) faired so poorly is that they were generally the bearers of bad tidings.[19] The point here is that public officials, particularly at the federal level, do not really want to know that their programs are failing. State and local officials, on the other hand, cannot sustain the luxury of this "ignorance is bliss" attitude. Yet, under the pressures of Sunset and termination strategies, the politics of evaluation becomes a monumental concern. Public interest groups could very easily put an entire regional or local agency out of business if armed with information about unfavorable evaluations. Common Cause, the principal proponent of Sunset Laws, has even begun to warn of the perils of premature termination.[20] At present, however, unjustified termination is not nearly as large a problem as ineffective programs which proceed indefinitely because: (a) internal organizational resistance and/or outside political forces make evaluation impossible; or (b) evaluations are done but are manipulated so as to portray a favorable impression. In other words, the socio-political and organizational (internal political) settings impose constraints upon authentic and objective program evaluation.

To cope with constraints, policy analysts and program managers must first be aware of the factors which impinge upon evaluation and be willing to take steps to ensure the integrity of assessment. Such steps might include:

(1) Developing alternative reporting procedures to circumvent the biases of politicized client groups.

(2) Facilitating independent third party assessments by the auditor's office or outside consultants to avoid internal organizational biases.

(3) Linking evaluations to highly visible budgetary decisions so as to ensure that results will have impacts upon future funding.

(4) Standardizing evaluative criteria and indices and providing fixed procedures to avoid reporting of favorable results only.

(5) Avoiding publication of inconclusive evaluations.

It is particularly noteworthy that despite the advent of Sunset Laws, evaluation is not a life and death struggle. This is especially true in the context of the implementation process, where evaluation is designed to guide strategic adjustments and enhance program performance. Political manipulation and organizational resistance are likely to continue to effect the status of the evaluative enterprise, but they need not cause it to deviate from its central purpose--that of improving public programs.

ENDNOTES

[1]See: Harry P. Hatry, et al., Practical Program Evaluation for State and Local Government Officials (Washington, D. C.: The Urban Institute, 1973).

[2]John S. Wholey, et al., Federal Evaluation Policy: Analyzing the Effects of Public Programs (Washington, D. C.: The Urban Institute, 1970).

[3]Adam W. Herbert, Jr., "Policy Evaluation: Strategies and Techniques", presentation at Virginia Polytechnic Institute and State University (Winter, 1972).

[4]E. S. Quade, Analysis For Public Decisions (New York: American Elsevier Publishing Company, 1975), p. 224.

[5]For a further discussion of this output orientation in public budgeting, see: Alan Walter Steiss, Performance/Program Budgeting, Module #6 (Washington, D. C.: National Training and Development Service, 1977).

[6]These measures are discussed in Module #8 of this NTDS series on Policy/Program Analysis and Evaluation Techniques.

[7]Quade, op. cit., p. 225.

[8]For a further discussion of auditing procedures see: Leo Herbert, Performance Auditing, Module #9 (Washington, D. C.: National Training and Development Service, 1977).

[9]Standards for Audit of Governmental Organizations, Programs, Activities and Functions (Washington, D. C.: Government Printing Office, 1972), p. 2.

[10]The techniques of Management by Objectives (MBO) are described in Module #3 of this NTDS series.

[11]Hatry, op. cit., pp. 39-70.

[12]Harry P. Hatry, "Measuring the Quality of Public Services", in: Improving Urban Management, edited by Willis D. Hawley and David Rogers (Beverly Hills, Calif.: Russell Sage Publications, 1976), p. 7.

[13]See: Louis Blair and Alfred E. Schwartz, How Clean is Our City? (Washington, D. C.: The Urban Institute, 1972).

[14]For a further discussion of these survey techniques, see: Kenneth Webb and Harry P. Hatry, Obtaining Citizen Feedback (Washington, D. C.: The Urban Institute, 1973).

[15]Norman Dalkey, et al., Studies in the Quality of Life: Delphi and Decision-Making (Lexington, Mass.: D. C. Heath and Company, 1972).

[16]See: Joseph L. Rodgers, Citizen Committees: A Guide to Their Use in Local Government (Cambridge, Mass.: Ballinger, 1977).

[17]Hatry, "Measuring the Quality of Public Services," pp. 17-18.

[18]Ibid., pp. 4-5; for a much more elaborate discussion of Strategic Planning, see: Robert C. Stuart, Strategic Planning, Module #1 (Washington, D. C.: National Training and Development Service, 1977).

[19]See: Carol H. Weiss and Michael J. Bucuvalas, "The Challenge of Social Research to Decision Making," in Using Social Research in Public Policy Making (Lexington, Mass.: D. C. Heath and Company, 1977), pp. 213-234.

[20]See: Bruce Adams, "Guidelines for Sunset," State Government (Summer, 1976).

CASE STUDY #1: IMPROVING POLICE SERVICES

The City of Rurbania is a moderate size urban center serving a broad agricultural region. While crime is not a very serious problem, older residents who have grown accustomed to the "no lock" environment of a small town are upset with the apparent increases in petty theft, vandalism, and occasional violent crimes. Newcomers to Rurbania view the police force as an unprofessional bunch of "good old boys", who are unable (or unwilling) to keep pace with the changing times.

Attempts to upgrade police services have been limited to increases in manpower and an updating of equipment (including additional patrol cars). These "improvements" have merely served to make the police force more visible in its ineffectiveness. Some members of the community, particularly Rurbania's liberal press, have even claimed that there are too many police, and that they seem to have nothing better to do but harass law-abiding citizens.

Earlier this year, Rurbania's Chief of Police, John Darm, was informed that his force will soon receive a $100,000 LEAA Grant to improve the quality of police services. Chief Darm views that grant as something of a mixed blessing. He would like to spend this windfall on capital equipment, but he remembers the controversy that generated over expenditures of Revenue Sharing funds which did not produce any new programs. While new programs sound like a simple and inviting prospect, Chief Darm has been around long enough to know the negative results that programmatic innovations often generate. He realized that the following consequences are distinct possibilities:

(1) Trial balloons often burst, leaving the department open to public criticism.

(2) Policemen are probably more conservative than most public employees and are thus more subject to the bureaucratic phenomenon of "change resistance".

(3) LEAA will require systematic evaluations, and such evaluations often are difficult and costly.

(4) LEAA will require a final report at the end of two years, and measurable results may be difficult to produce in that short a time period.

In spite of these potential difficulties, Chief Darm decided to accept the grant. He based his decision on the following rationale: (a) the Mayor and City Council expect him to accept, (b) Chief Darm fancies himself as an "idea man", and (c) it will give him a chance to test some strategies and pet theories which the City Council has been unwilling to fund.

Among the ideas that Chief Darm explored for potential funding, the following topped his list:

(1) Reintroduction of "beat cops" (foot patrols) in the central business district.

(2) Changes from the standard uniform to blazers and less conspicious weaponry.

(3) Initiation of a Police Cadet Corps for disadvantaged youngsters.

(4) Counseling programs for policemen in handling rape victims.

(5) A computer monitoring system which keeps track of previously convicted individuals and those awaiting trial.

The reintroduction of "beat cops" to the central business district, of course, would have the wide support of the Chamber of Commerce. Moreover, its effectiveness could be measured both in citizen attitudes (subjective measures) and in the reduction of crime (objective measures). This program would also be relatively inexpensive to initiate. The only drawback would be the problem of locating officers who would be willing to give up their patrol cars.

Changing the standard uniform would be less likely to provide objective (measurable) changes, but it might improve the police force's public image and indirectly lead to improved performance through increased public support. Public image, in Chief Darm's mind, is a less tangible, yet highly significant aspect of police work.

The Cadet Corps might generate both objective and subjective improvements, but it is unlikely that these improvements would be very evident during the duration of the LEAA funding period. Nevertheless, the idea has the support of several church and civic groups, as well as representatives of the minority community.

The handling of rape cases has been a real problem area, and several women's organizations have lobbied for more sensitive police attitudes for a number of years. Yet, since the rate of sexual assault is relatively low in Rurbania, results of such a counseling program might not be apparent for some time. Moreover, the results--largely the psychological well-being of raped women--are highly intangible and therefore, might be difficult to measure even subjectively.

The computer monitoring system would be designed for use in a "get tough" program in which previous offenders would be watched carefully and picked up on the slightest violation. For many of these individuals, it would mean a free trip back to prison. Such programs have produced remarkable reductions in the crime rate in large cities, since most crime is committed by career offenders. The drawback of such a system is the requirement of special data processing expertise and increased enforcement manpower. This program, therefore, would be quite expensive, probably requiring the total amount allocated by LEAA. Overall, it may not be cost-effective for a city the size of Rurbania.

John Darm decided to put all his eggs in one basket and go with the computer monitoring program. His rationale included the following elements:

(1) It represents a quantum leap in terms of modern police services.

(2) It provides added manpower and hardware for the City of Rurbania at federal expense.

(3) The results will be relatively easy to monitor and evaluate via standard crime reporting procedures.

SCENARID #1: IMPLEMENTATION/EVALUATION PLAN

At the meetings of the City Council and subsequent public forums, John Darm's plan for spending the LEAA funds was widely criticized. The liberal press labelled the program as "institutionalized fascism". Citizen groups denounced the plan as a waste of money and as having little to do with the quality of police services. Meanwhile, various women's groups learned from inside sources that the counseling program was one of the rejected alternatives, and they were outraged.

As a consequence of this outcry, Chief Darm beat a hasty and strategic retreat and forwarded the Rape Counseling and the Beat Cop Programs as his proposed improvements. While these ideas met with greater public acceptance, several questions remain unanswered:

(1) At what level will the programs be implemented?

(2) Given the costs of implementation and evaluation, what type of evaluation is feasible?

(3) How will the performance (quantity and quality) of the programs be measured?

As the Assistant to the City Manager, you have been asked by the Mayor and the Council to aid Chief Darm in the development of his implementation/evaluation plan in response to these unaswered questions.

INSTRUCTIONAL GUIDE #1

Initially, it may be advisable to engage in a brainstorming session (using newsprint or a blackborard), involving all participants, to identify a reasonable set of effectiveness indicators for the two programs. It should be emphasized that this activity is a partial response to the third question in the Scenario, and that performance indicators and their measurement are vital preconditions to determing the appropriate level and format of evaluation. This discussion should seek to distinguish between subjective and objective measures.

Having arrived at a common set of evaluation criteria, participants may procede with the construction of justifications for their evaluation plans. These justifications should include the following types of information:

(1) Data sources for constructing indices of evaluative criteria and methods of data collection.

(2) Availability of data sources in reference of the evaluative approach (e.g., Before/After).

(3) Time and cost factors.

(4) Manpower and expertise requirements.

(5) Constraints and opportunities associated with the approaches chosen.

ALPHA/OMEGA: STRATEGIC PLANNING AND POLICY RENEGOTIATION

This section is entitled Alpha/Omega for at this point the discussion of policy/program analysis and evaluation techniques has gone full circle. Module #1 in this curriculum package focuses on the techniques of Strategic Planning, and here in Module #10, the role of Strategic Planning will be developed in the context of policy/program implementation. It is well to note that this section can only hope to provide a very brief overview of Strategic Planning, and thus those who desire a more detailed discussion are directed to Module #1 (this would be particularly useful to the module instructor).

Strategic Planning and Management by Exception

Recalling the conceptual framework of implementation developed in Chapter 1, an analogy was established between the planning process in the private sector (i.e., strategic, management, and operations planning) and the procedures for public program implementation. The following elements integral to the implementation process were listed under the category of Strategic Planning: (1) goals, objectives and action commitments; and (2) socio-political supports, constraints, and opportunities.

This analogy can be carried one step further to encompass the role which Strategic Planning plays in the renegotiation of policies and programs. Such renogotiation in the private sector is known as Management By Exception (MBE). Lester Bittel describes MBE as a systematic process for insuring efficient implementation.[1] This system includes:

(1) Measurement--a procedure for assigning values to performance.

(2) Projection--the forecasting of further expectations.

(3) Selection--the process by which criteria that define objectives are pinpointed.

(4) Observation--the phase which identifies the current state of performance.

(5) Comparison--the process by which actual performance is matched against expected performance.

(6) Decision-Making--the activity which prescribes actions that must be taken to: (a) bring performance back into control, or (b) adjust expectations to changing conditions, or (c) exploit opportunities.

Michael Munson offers a similar definition of management in general, suggesting that it is the process "which keeps the various activities of the organization coordinated and continuously striving towards fulfillment of the organization's internal and external purposes."[2] Within this context, Strategic Planning facilitates this type of management under conditions of rapidly evolving goals and objectives.

Outputs and Impacts of the Policy-Making Process

Various authors have sought to distinguish between policy outputs and policy impacts. In this context, policy outputs are the regulations and controls arising from the actions of government and the service levels which are affected by these actions. Policy impacts represent the effects which public services have on a population and the responses of the population to policy outputs. Easton has identified two types of policy outputs: (1) authoritative and (2) associated. Authoritative outputs are binding decisions, laws, decrees, regulations, orders, and judicial decisions made by recognized authorities in the policy-making process.

According to Easton:

> Accompanying these formal outputs, very frequently, are decisions and actions that could be included as binding only if we force the language of our analysis unmercifully. Yet their consequences may at times be such as to be virtually indistinguishable from the binding outputs with respect both to the goals of the system and to the effects on support.[3]

The objective of associated outputs may be that of explanation of information. More frequently, however, they represent efforts to persuade relative to the acceptance of authoritative outputs that have been or will be produced. Associated outputs, Easton asserts, perform a function similar to authoritative outputs in creating or alleviating supportive stress on a political system.

Both Easton and Sharkansky (among others) point to a need to look beyond the "tangible" outputs of the policy-making process to discern the implications of these outputs for the affected groups.

> . . . an output is the stone tossed into the pond and its first splash; the outcomes are the ever widening and vanishing pattern of concentric ripples. The actual decision and the implementing actions are the outputs; the consequences traceable to them, however long the discernable chain of causation, are the outcomes.[4]

It is the function of policy evaluation to discern the consequences, outcomes, or impacts of policy decisions. What is sought is an understanding of the conditions through which goals and objectives are effectively established and achieved, where the criteria of effectiveness may range from unspecified efficiency to a postulated welfare function. The evaluation of impacts provide the feedback phase of the systems model. In this sense, feedback involves: (a) policy outputs as stimuli, (b) the response to these stimuli by the affected groups (acceptance or rejection, support or opposition,

etc.), (c) the information feedback arising from the response and flowing back to the system, and (d) the output reaction--modification of the initial output as a reaction to the response from the originators of demands and the sources of systems support.

Elements of Strategic Planning

As suggested previously in the section on quality measurement, Strategic Planning carries over into the implementation/evaluation process. It is not limited to policy formulation. In essence, Strategic Planning should provide continuous feedback on societal preferences, shifts in the markets of public services, and changing conditions in the broader decision environment that might impact policies and programs and give rise to the need for changes in policy directions.

Strategic Planning in business and industry involves basic market forecasting mechanisms (i.e., techniques to assess changes in external conditions which might impact the overall purpose of the firm). In the public sector, Strategic Planning takes on much broader implications and should include the following ingredients:

(1) Basic research and analysis appropriate to the determination of a "planning horizon".

(2) Diagnosis of trends and needs, and the formulation of effectiveness measures.

(3) Forecast of alternative futures.

(4) Generation of statements of goals and objectives as desired states of the system.

(5) Preliminary assessment of alternative action commitments.

(6) Formulation of preliminary policy statements and plans for renegotiations.

In planning for future growth and development, it is appropriate to define a planning horizon (the farthest point in the future which can be anticipated based upon development trends). This horizon designation can provide the basis for a series of policy statements to guide long-range future growth and development toward a desired state of the system. As time passes and the planning horizon draws nearer, it becomes possible to anticipate points in the future. Just as with the natural horizon, as the initial "target" is approached, the planning horizon continues to recede, making adjustments in long-range goals and objectives and the policies designed for the achievement both necessary and possible. Therefore, the horizon concept provides a dynamic approach to Strategic Planning: the horizon can be changed, revised, or dismissed as the body of knowledge on which it is based is enlarged.

The formulation of policy statements to guide future growth and development must be based on research, measurement, and data collection. Relevant data would include diverse indices drawn from demographics,

citizen surveys, public awareness meetings, professional assessments, and so forth. These data provide a basis for an approximation of the type of community and/or organizational development that may occur (and should occur). The data set, of course, will depend upon the types of policy problems under consideration.

The development of goals is a very murky area, but it is crucial to the definition of more specific objectives and the evaluation of needs. The formulation of goals should involve a high level of public input. Once goals and objectives are defined and agreement established, alternative policies must be designed to meet them.

Goals can be formulated by two methods. An inductive approach arrives at goals through extensive surveys of public opinions, attitudes, and objectives. Through a deductive approach, the task becomes one of forming tentative goal sets and effectiveness measures and testing them in the context of a specific population, thus allowing new factors to emerge. While goals should be representative of the attitudes and aspirations of the specific community or population, the strategic planning model provides for the establishment of more normative goals based on identifiable trends in the society at large.

Forecasting is also a vital step in the Strategic Planning process. Regular forecasts of trends and changes in population, physical characteristics of the community, and resource allocations are essential for the development of long and short range plans. An annual estimate of current conditions will aid in the assessment of expected changes. Forecasting enables the planner to project future needs and to design programs to meet these needs. Several basic forecasts can be made:

(1) changes in environmental factors,

(2) changes in financial conditions,

(3) demographic trends,

(4) macro trends,

(5) structural changes, and

(6) alterations in land uses.

These forecasts, based on applied and technical studies, should attempt to carry forward most of the key variables, and thereby assist planners and managers in the development of appropriate programs. By predicting future needs and desired conditions, resources can be allocated more effectively, and many problems can be anticipated and thus ameliorated.

The development of policies and programs should also include the assignment of priorities to the various objectives to assist in the allocation of limited resources. Priorities may be formulated in terms of:

(1) public demand and support,

(2) programmatic feasibility,

(3) certainty of attainment (risk threshold),

(4) funding sources,

(5) relative linkage to and support provided other objectives, and

(6) level of information available.

In the final phase of the Strategic Planning process, system inputs are considered, weighted, and evaluated to produce an output (policy and/or program recommendation). Policies and programs should cover the entire range of actions required by the identified goal sets and should be structured according to social needs and organizational objectives. Policies must address such basic questions as:

(1) What is to be accomplished (objectives)?

(2) How it is to be accomplished (means)?

(3) Where it is to be accomplished (locus)?

(4) Given limited resources, what is to be accomplished first (priorities? and

(5) What are appropriate measures of accomplishment (standards for evaluation and control)?

This cumulative phase involves the selection of the best policy statement based upon feasibility, program consequences, financial considerations, and the needs and requirements of the community. It is essential to note that community requirements are in constant flux, and thus, policy statements should be subject to constant refinement or renegotiation.

Renegotiation and/or Termination

Logically, when Strategic Planning processes identify fluctuations in the market and/or socio-political setting, it would seem that renegotiations or terminations of policies and programs would be forthcoming. The concept of renegotiation emerges from the feedback phase of the systems model, whereby the initial policy or program outputs are modified in response to the reactions of affected groups and sources of support. Renegotiation suggests refinement and re-targeting of policies and programs rather than the setting of totally new directions.

In the private sector, businessmen can ill-afford to allow ineffectual programs to continue without alteration. In the public sector, however, programs often develop a life of their own with regard to organizational factors and clientele groups which sustain them. While it often is difficult to achieve sufficient momentum to attain an authoritative decision

(policy output) in certain issue areas, once enacted, the termination of public policies and programs may encounter even greater difficulties. Peter DeLeon outlines some of the constraints on termination as follows:[5]

(1) Intellectual Reluctance--analysts and planners have a natural reluctance to consider the issue of termination, given the hard-fought battles necessary to obtain a policy or program in the first instance.

(2) Institutional Permanence--policies and agencies are designed to endure; complex organizations have an uncanny survival instinct.

(3) Situational Dynamics--programs constantly are being adapted to emerging situations to avoid termination.

(4) Anti-Termination Coalitions--significant political and/or clientele groups often support programs beyond their span of effectiveness.

(5) Legal Obstacles--programs have certain rights of "due process".

(6) High Start-Up Costs--mounting campaigns for termination is often costly, both monetarily and politically.

With public programs, strategic renegotiations often are possible, particularly if they are profitable to entrenched interests. DeLeon provides the following helpful hints for program modification:[6]

(1) Modification and/or termination should not be viewed as the end of the world; rather, it is an opportunity for policy improvement.

(2) Modification and/or termination should coincide with systematic evaluation.

(3) Policies and programs have certain "natural points"--times and places in the lifespan--where reconsideration is more likely and more appropriate.

(4) The time horizon for gradual change is a significant factor.

(5) The structure of incentives might be changed to promote modification; for example, agencies might be permitted to retain a portion of the funding for programs that they voluntarily cut.

(6) Agencies might employ a staff of "salvage specialists", trained in reallocating resources.

Increasingly, governmental activities are constrained by impending fiscal crises, and thus termination or at least serious renegotiations are becoming more viable. In the movement toward more innovation in the implementation of policies and programs, Strategic Planning provides a tool for salvaging or scraping particular programs.

Sunset Legislation

Government regulation often is necessary to protect the public from incompetent professionals (doctors, lawyers, architects, etc.), contaminated food, and other potential hazards of life and health. There can be too much regulation, however, and instead of protecting the public, the power of government can be used to thwart qualified individuals who--often for arbitrary reasons--cannot meet certification or licensing standards. Some have argued that the board members who grant such credentials often have a vested interest in keeping out potential competitors.

To limit the growing power of regulatory agencies, in April, 1976, Colorado became the first state to pass a "sunset law". Sunset legislation calls for the automatic termination of regulatory agencies unless they can periodically justify their continuance. The sunset concept is not new; it was proposed, but not adopted during the administration of Franklin D. Roosevelt. Since 1976, nearly every state legislature has considered sunset laws, and twenty-three states have put such laws on their books. The sunset concept also is gaining momentum in Washington. President Carter likes the idea, and bills have been introduced in the House and Senate to establish a national sunset law.

Although no two states' laws are identical, they generally share the following characteristics:[7]

(1) State agencies which previously had indefinite lifespans are assigned a termination date.

(2) If the legislature takes no action, the sun sets on that agency on its termination date.

(3) The legislature can--and in most instances probably will--vote to reconstitute the agency.

(4) Reconstruction may leave the agency unchanged, or it may significantly modify its mandate and responsibilities.

Sunset legislation enacted thus far usually divides agencies into five groups and schedules their review on a staggered basis so that an equal number of agencies are evaluated each year. In the months preceding the termination date, the agencies begin the justification and evaluation process. This review sometimes is undertaken in conjunction with the concepts of zero-base budgeting. The information subsequently is evaluated by a legislative committee; the legislature then acts on the committee's recommendation. If reauthorized (or reconstituted) the agency will again be subject to review (and possible termination) at the end of the next cycle.[8]

In Colorado, sunset applies only to regulatory agencies. In Alabama, however, sunset legislation applies to virtually all state departments, board, and agencies. This approach points up a potential problem with the sunset concept: if a state tries to apply sunset too broadly too soon, it will be overwhelmed by the task. As Bruce Adams of Common Cause observes:

> Alabama did not build in an evaluation component the way Colorado did. The legislators had no data base from which to work. Alabama covered so many agencies--no one can do 200--that it was like the gladiators in Rome: people were asked to put "thumbs up" or "thumbs down" on one agency after another. Without a data base, the safest thing to do is to continue the agency, and that defeats the purpose of sunset.[9]

Of the agencies reviewed in 1977 under the Alabama sunset law, only one was terminated. In compliance with the law, performance audits were prepared on thirteen agencies in Colorado during 1977. The Colorado Senate voted to terminate three boards (Athletic Commission, Board of Barber Examiners, and the Board of Registration for Professional Sanitarians) and to substantially change two agencies (the Collection Agency Board and the Passenger Tramway Safety Board).

The advent of sunset legislation and growing advocacy for zero-base budgeting does not imply that the program analyst can totally ignore the types of constraints listed above with reference to policy/program termination. Management By Exception still remains a highly tenuous process in the public sector. Sunset legislation appears to have the greatest potential when applied in the evaluation of selected agencies and programs; it should be phased in and made to work so that its coverage can be expanded at a later date. Zero-base budgeting is just in its experimental stage, and the jury is still out on the question of whether this budgetary format will actually result in the termination of any agencies or programs. The procedures of Strategic Planning, if appropriately expanded to include the implementation/evaluation phase of policy making, would seem to hold the greatest promise at this juncture to provide an adequate basis for renegotiation and/or termination.

CASE STUDY #2: POLICY/PROGRAM RENEGOTIATION IN HEALTH SERVICES

Approximately five years ago, Rurbania underwent a rigorous self-analysis with regards to future health care services. The city is now in the midst of implementing a multi-million dollar health care improvement package. Elements of this package include:

(1) Prenatal care clinics;

(2) A drug abuse center; and

(3) Major capital improvements to existing hospitals, involving: (a) sophisticated diagnostic machinery, (b) the addition of 300 bed spaces through the addition of a new wing to Central Hospital, and (c) increased staff.

The prenatal clinics currently are in operation (based largely in existing facilities), and general impressions are that the program is a marked success. Infant mortality and birth defects already are down a percentage point. Public opinion is very supportive of the program, despite the fact that it only serves a small segment of the community (e.g., low income families). Moreover, the birth rate in this sup-population is on the decline.

The drug abuse center has just opened its doors, and the caseload is very light. Hard core addiction is relatively rare in Rurbania; the widespread experimentation with lesser drugs (Barbiturates, LSD, etc.) of the 1960's has ebbed. Marijuana usage is still quite prevalent, but it no longer is viewed as a serious abuse problem. Supporters of the center have launched a concerted campaign to focus attention upon the abuse of household variety drugs (aspirin, sleeping pills, tranquilizers, etc.), but local pharmacists and the AMA chapter take a dim view of this tactic.

Some of the hospital capital improvements are under construction, while most remain on the drawing board. New equipment purchases have been allocated but have yet to be delivered. Delays have resulted from contact disputes, a union strike, and skyrocketing costs which outstripped initial allocations. Plans are finally moving ahead full steam. However, completion of the 300 additional bed spaces is still at least three years away. Meanwhile, Rurbania's existing spaces are rarely filled. Nevertheless, the powerful medical interests, backed by developers and growth agents, argue that the spaces will be needed to meet the city's future needs.

SCENARIO #2

Recently, the entire health care package has come under fire. Consumer groups have complained bitterly that the package merely contributes to rising medical costs. Meanwhile, the heretofore silent minority of elderly residents (increasingly becoming a majority in Rurbania) has now become a vocal interest group. They have denounced the entire health system for ignoring the needs of older residents, particularly those on fixed incomes. These

groups are calling for a complete review of the health care plan now under implementation.

The Comprehensive Health Planning Agency serving your area is principally responsible for the plan now under implementation. This has made them somewhat reluctant to aid you in your reassessment. However, inside sources suggest that growth projections are shifting. Rurbania's general population is on the decline and proportionally becoming more aged. Some factions in the community are already well aware of this population trend. For example, real estate brokers and contractors are already feeling the crunch. These groups are claiming that a continuation of the original plan will stimulate growth. This strategy implies that overdrafting municipal service industries creates a general atmosphere conducive to growth. That is, a desire to find people and/or industry in order to redistribute the tax burden. This group also contends that above average hospital facilities will encourage industry to locate in Rurbania. It is noteworthy, that this group also has the support of the medical profession, most of whom are large land owners.

As the Assistant City Manager for Policy Analysis, you have been called upon to review the plan and make recommendations for its modification. Keeping in mind that powerful interest groups are watching your every move, your analysis must be objective and scientific, as well as establishing a foundation upon which to build a consensus among the competing interests. In general, your discussion should respond to the following questions:

(1) What types of procedures and what types of indices might be useful to you in your analysis?

(2) What alterations and/or terminations would you suggest?

(3) How would you go about building a consensus for your new plan?

ENDNOTES

[1]Lester R. Bittel, Management By Exception (New York: McGraw-Hill Book Company, 1964), pp. 5-6.

[2]Michael Munson, "How to Keep Plans Off the Shelf: An Organizational View of Planning, Management, and Implementation" (Unpubl. Ph.D. Dissertation, University of Michigan, 1972), p. 14.

[3]David A. Easton, A Systems Analysis of Political Life (New York: John Wiley & Sons, 1965), p. 352.

[4]Ibid., p. 352.

[5]Peter DeLeon, "A Theory of Termination", a paper presented at the American Political Science Conference, September 1977.

[6]Ibid.

[7]Peter J. Ognibene, "Do We Need 'Sunset'?", Parade Magazine, October 2, 1977, p. 9.

[8]Common Cause, "Sunset in the States," April 20, 1977.

[9]As cited in Ognibene.

CHAPTER 4

OPERATIONS PLANNING, SCHEDULING, AND CONTROL

A critical facet in the implementation of any public program is the organization and scheduling of pertinent activities to ensure that they are carried out with economy and efficiency, while achieving the greatest possible degree of effectiveness. More systematic methods for the programming of work activities are finding increasing application in both the private and public sectors. These techniques of work programming can lead to significant cost reductions, as well as provide greater assurances that, in the delivery of public services, activities will be completed within some anticipated schedule or, when problems and delays are encountered, that necessary steps can be initiated promptly to bring the program back on schedule.

COMPONENTS OF PROGRAM MANAGEMENT

The implementation of any public program or project involves three fundamental elements:

(1) Operations: the things that must be done, involving the use of public resources for some time duration and at some cost.

(2) Resources: the things utilized in a program or project, normally reduced to a common standard of cost, but including men, machine, materials, money, and time.

(3) Constraints: conditions imposed by outside factors such as completion dates, resource limits, inputs from other sources, and so forth.

If a program or project is to be successful in its implementation, these diverse and often contradictory components must be coordinated into an operations plan or working model that will permit the program to be completed (or maintained) in the "best" time, at the least cost, and with the smallest degree of risk.

Operations are the activities, jobs, or specific tasks that must be performed to meet the objectives of a public program or project. Of vital importance is the sequence or order in which these operations are to be performed. In any program, certain operations can or must be done before others, while some operations can be carried out concurrently with others. In addition to determining the appropriate sequence of activities, program managers must establish the method, time, and cost of performing each operation. These factors constitute the basic resource requirements for carrying out public programs and projects

Operations planning involves a determination of requirements for program resources and their necessary order of commitment to the various activities that must be performed to achieve program objectives. Once a

program or project is initiated, management of the activities involves adherence to some predetermined performance schedule. Scheduling involves a determination of the calendar dates or times of resource utilization according to the total assigned resource capacity of the program and in view of the identifiable contraints. The scheduling function can be performed properly only after the planning phase is complete. Operations control involves the monitoring of program activities to ensure that they adhere to the performance schedule. An important difference between operations planning, scheduling, and control and other methods of work programming is that planning and scheduling are treated as separate, albeit, interdependent functions.

An operations plan must be dynamic. It must provide management with the ability to: (1) consider the costs of several alternatives in dollars and time; (2) establish criteria for resource allocation and scheduling; (3) provide criteria for evaluating the accuracy of estimates and assist in refining estimates for later use; (4) understand and evaluate the effect of change without delay; (5) revise and update the plan and schedule as quickly as possible; and (6) provide a vehicle for the communication and assimilation of data.

End Product Versus Process Orientation

A high degree of inefficient organization continues to plague the programming of governmental operations. This continued inefficiency is somewhat ironic in light of general administrative objectives of economy and efficiency which have been watchwords in government since the early thirties. Readily available evidence of the above indictment, however, can be found in the number of project deadlines that are missed, often because they are unrealistic in light of the scope of work; in the federally sponsored programs which require project extensions; in the all-too-familiar practice of dropping work items from a project schedule in order to meet overall work deadlines; and in the public programs that are discontinued because they have not shown the desired "results" in the anticipated time period (again the problem may be an unrealistic time schedule for accomplishment).

Much of the inefficiency in the programming of government operations can be attributed to a lack of understanding of, and confidence in, the use of new programming techniques which have been applied successfully in the private sector. The argument that techniques developed for private enterprise are not applicable directly to public activities--particularly non-product-oriented functions--is fallacious by its very nature. It may be valid to say that many activities of government are "process" oriented, and therefore do not result in an "end product" as such. It must be recognized, however, that these processes have some objectives which can be analogous to a project completion. Further, a range of cost and time constraints clearly can be associated with most government operations. Through effective programming, these operations can be organized in an optimal manner so as to minimize activity cost and utilize time constraints more effectively. Assuming that such an operations plan and schedule is

followed, it will also mean that the time saved through the minimization of inefficiencies will enable the staff to undertake new and varied activities without increasing in size.

There are two basic requirements for formulating a plan and schedule for governmental operations: (1) a clearly stated work program (including a breakdown of jobs or work elements) directed toward one or more definable objectives; and (2) the skill to attach cost and resource estimates to each work element in this work program. Given this fundamental information, there are several operations planning, scheduling, and control techniques which have been developed to permit a determination of maximum time allotments for each job, as well as costs involved.

PERT and CPM: The Basis for Effective Operations Planning

Complex management demands are present whether the program involves the supervision of a research project, construction of a single-family home, management of a business, direction of a voyage into space, or the development and maintenance of a public service program. Such techniques as PERT (Program Evaluation and Review Technique) and CPM (Critical Path Method) were developed in industry and in the military in recognition of the need for better program management. These techniques are equally applicable to the planning, scheduling, monitoring, and control of any type of public operations provided that:

(1) Planning is geared to the operations to be performed--that is, an operations plan must be activity oriented.

(2) Reporting is geared to the completion (whole or part) of activities or to the arrival at milestones in the program; if an event or milestone approach is used, the management system should be built upon an activity-oriented plan.

These two points must be underlined at the outset, since the failure in application of these techniques to governmental programs so often arises from a failure on the part of program managers to recognize the need to express their programs in activity terms. This failure, in turn, may be traced to the inability or reluctance of public management to think in terms of strict time constraints. Although time frequently is overlooked as a public program resource, it may prove to be the most valuable of all resources and the one to be "spent" most wisely. Business management has long recognized that "getting something done" requires a concomitant specification of a time period for accomplishment if the objectives are to be met effectively. Governments have been slow to adopt this parallel requirement for public programs.

Since PERT and CPM first appeared in the late fifties, their apparent differences have all but disappeared. The Critical Path Method. developed in 1956, was designed primarily for the evaluation of performance time and the total cost of projects consisting of relatively well-defined activities.

PERT was formulated in 1958 for the management of very large and/or long-range projects for which the nature and duration of many activities involved high degrees of uncertainty.

As both methods were subsequently revised for improvement, attractive features of one were soon incorporated into the other. The arrow diagram, or "network", is common to both methods. It is possible to identify a "critical path" in the development of a PERT network. While differences may appear in the calculations made and in the emphasis placed on various aspects of the network, the variations between the way two users employ either PERT or CPM may be greater than the actual differences between the techniques themselves.

EVOLUTION OF NETWORK ANALYSIS

Reduced to their fundamental components, CPM and PERT essentially are more advanced forms of network analysis. The application of network theory to problems of operations planning and control is not new. Managers of industrial processes have used many of the terms and concepts of network analysis in their production planning since the turn of the century. Prior to World War II, industrial engineers developed process flow charts and industrial programming techniques, such as line of balance charts. These techniques are quite similar in concept to the network theory that form the basis for PERT. Similarly, analysts for years have utilized a topological approach in work programming that parallels the network algorithm in both CPM and PERT. Thus, the evolution of the network-based system can be traced back to the work of pioneers in the field of scientific management, such as Frederick Taylor and Henry Laurence Gantt. Taylor's time and motion studies are familiar to every student of industrial engineering and administration. Gantt charts (bar charts) form the basis for many modern production scheduling systems.

Origins of the Technique--Gantt Charts

The Gantt chart, formulated in the early 1900's, is premised on the notion that management is (or should be) concerned primarily with the future. The task of management is to decide on policies and to take action in accordance with those policies so as to bring about a desired set of conditions (i.e., to achieve certain goals and objectives). Decisions which affect the future, Gantt reasoned, must be based on knowledge of what has happen in the past. While a record that certain events have taken place or a certain amount of work has been done is of value in making such decisions, it does not give the managers sufficient insight into the future. Gantt concluded that the manager must also know when those events took place or the rate at which work was done. In other words, his initial contribution was a recognition that the relation of events to time must be made clear--that management decisions must be based ont only on carefully proved facts but also on a full appreciation of the importance of the momentum of those facts.

The Gantt chart compares what is accomplished with what was to be accomplished--it keeps management advised as to the progress made in the execution of organizational plans. If progress is not satisfactory, it begins to uncover the reasons why, since a Gantt chart facilitates the assignment of clear-cut tasks (and therefore, responsibility) to individuals. The Gantt chart was the first tool of management which permitted the application of the principle of management by exception, that is, focusing management's attention on the deviations from the plan so that appropriate action can be taken to bring the deviations back in line with the projected program. The manager's time can be used more efficiently since he does not have to monitor each and every activity or step on the process. Cause and effect relationships and their time dimensions are brought out more clearly than in previously applied techniques, making it possible to fix responsibility for success or failure.

The relatively conceptual simplicity of the Gantt charting techniques is one reason why this technique continues to receive widespread application in contemporary program management. Gantt charts are easy to read; records move with time across the sheet from left to right and on lines cross each other. There is also an element of continuity in the Gantt chart which emphasizes any break in records or any lack of knowledge as to what has taken place. One of the more common forms of Gantt chart used today is the so-called time-line diagram.

Shortcomings of Original Charting Techniques

The problem of "concurrency" (i.e., overlapping or interrelated activities) in large-scale engineering projects soon revealed some fundamental weaknesses in the original Gantt bar chart as a management tool in an increasingly dynamic management environment. These weaknesses include:

(1) The inability to show interdependencies which exist between the efforts represented by the bars--a serious deficiency when planning programs in which various tasks are scheduled with a large degree of concurrency.

(2) The inflexibility of a bar chart plotted against a calendar scale, which prevents it from easily reflecting slippage or changes in plans.

(3) The inability to reflect uncertainty or tolerances in the duration times estimated for various activities. In the management of contemporary projects of unprecedented size and complexity, this deficiency can be critical.

Milestone Charts: An Important Step Forward

Milestone systems represent one relatively successful attempt to modify the Gantt chart by adding new elements and, thereby, forms an important link in the evolution to the CPM and PERT network approach. Milestones are key elements or points in time which can be identified as a program or project progresses. The milestone system provides a sequential list of the various

critical tasks to be accomplished in the program. The milestone approach also increases awareness (if not effective display) of the interdependencies between tasks. Tasks and milestones are displayed adjacent to a time scale. Symbols on the time scale identify the dates (or times) that each milestone is scheduled, when it is completed, if it has slipped, and so forth. Data can be presented in various ways: by organization, by project and subproject, by performance status, and so forth.

Milestone systems are not without limitations, however. Relationships between milestones still are not clearly established. Milestones merely are listed in chronological sequence, not related in a logical sequence--important linkages may not be displayed. The milestone system does not allow for measuring the effect of changes and slippages, but merely improves the reporting of them.

As an example of these limitations, consider a project that is only complete when three activities G, H, and I are complete. Activity H cannot start until an activity D is complete, and I cannot start until activities E, F, and G are complete. Activity G is dependent on the completion of activity D, which in turn cannot start until activity B is complete. Activity E must follow activity B and activity F must follow yet another activity, A. The whole project is initiated with activities A, B, and C being started. The duration times of the various activities are shown in Table 4-1. With some effort, this project can be represented on a milestone chart (figure 4-1). Such a chart, however, would not indicate that activity I necessarily depends on activities E, F, or G, or that the whole project must wait on the completion of activity G. In figure 4-2, the same information is displayed through the use of a simple arrow network. A comparison of these two figure should illustrate the relative strengths of the arrow network in showing dependency and sequential relationships among activities.

From Gantt Charts to Networks

At the same time as the milestone approach was being perfected and widely applied, the network-based management system was emerging. In 1956, E. I. DuPont de Nemours undertook a thorough investigation of the extent to which a computer might be used to improve the planning, scheduling and progress reporting of the company's engineering programs. A DuPont engineer, Morgan R. Walker, and a Remington-Rand computer expert, James E. Kelley, Jr., worked on the problem. Late in 1957, they ran a pilot test of a system using a unique arrow-diagram or network method. This network approach came to be known as the Critical Path Method.

Then in 1957, the U.S. Navy Special Projects Office, Bureau of Ordnance established a research team which included the management consulting firm of Booz, Allen and Hamilton. The assignment of the team was Project PERT (Program Evaulation Research Task), aimed at finding a solution to what was at that time a commonplace situation. The Special Projects Office was faced with the task of developing a program on POLARIS. The POLARIS project

was a typical product of the times: a huge, complicated, weapon systems development program, being conducted at or beyond the state of the art in many technical areas, with activities proceeding concurrently in numerous industrial and scientific organizations throughout the country. PERT provides an approach for dealing with some of the fast-multiplying problems of large-scale projects in which technical innovation, complex logistics, and concurrent activities must be integrated.

By 1961, hundreds of articles, reports, and papers had been published on PERT and PERT-like systems, making it perhaps the most widely publicized, highly praised, sharply criticized, and widely discussed management technique ever devised. Enthusiastic proponents of the system--eager to identify with progress--spawned a multitude of acronyms. As these spin-offs multiplied, responsible industrial and military leaders became increasingly concerned about standardization. Although many of these systems had minor differences, they were all network-based. Various high-level efforts were mounted to minimize the differences and to develop a standard nomenclature and a more uniform system. The result was general acceptance of the techniques of PERT and CPM.

PERT techniques are particularly adaptable to large-scale projects and programs with (a) hard-to-define objectives, (b) multiple and/or overlapping responsibilities, (c) a large degree of time and cost uncertainty, and (d) relatively complex problems of logistics. In contemporary applications, PERT requires substantially more "sophistication" in computer hardware and software than CPM. The Critical Path Method, on the other hand, is an "in-the-field" approach, i.e., many CPM networks can be developed without heavy reliance on data processing equipment or extensive computer programming experience. The CPM technique is applicable to relatively well-defined projects or programs under the control of a single agency or organization. For purposes of operations planning and control in local government, CPM would seem to offer the greater promise.

APPLICATION OF THE CRITICAL PATH METHOD

A CPM network is essentially a "graphic plan of action", providing a visual picture of the objectives to be achieved and their linkages. It facilitates the selection of the critical route to be followed to reach these objectives and the identification of obstacles and delays that might be encountered. The CPM network permits the administrator and decision-maker to recognize more fully the relationship of the parts to the whole. CPM divides the management function into two distinct phases: (1) planning --deciding <u>what</u> should be done; and (2) scheduling--determining <u>when</u> operations should be done. With this separation of functions, it is possible to determine what operations or activities actually control significant completion times. Thus, supervision of any project or program can be managed by exception--principal attention can be given to the controlling operations.

Identification of Activity Linkages

The problems of planning and scheduling can be represented by networks indicating various activities in the proper order or sequence of execution

and showing the dependency relationships of various activities in a given project or program. The network provides a master plan in time scale for achieving the objectives of expediting the program completion, allocating available resources, and/or controlling the cost of the program.

In applying CPM, all of the identifiable activities or events in the program should first be listed and the immediately apparent linkages noted. An event may be designated as the completion of an activity. Very often at the outset of an operations plan, these linkages are only partially perceived. The following statements illustrate these initial perceptions for an eleven event project.

(1) Events J and I are the initial events of the project and can be performed concurrently.

(2) Event G must follow Event B.

(3) Event K is dependent on both Events H and G.

(4) Neither Event C or Event D can start before Event I is completed.

(5) Event J must precede Events B and H.

(6) Event A is dependent on both Events C and D.

(7) Event H must precede Event E.

(8) Events C and D can be performed concurrently.

(9) Event E is the last operation of the project.

(10) Event E can begin only after Events A, K, and F are completed.

Such statements might be the output of a brainstorming session with various members of the project staff who are to be involved in various aspects of the operations plan.

These statements can be ordered and systematized by developing a table that records the apparent linkages for the listed events (see Table 4-1). Once the "links" between various events or activities have been indicated clearly, three basic questions must be asked about each activity: (1) What must be done before this activity can begin? (2) What can be undertaken concurrently? (3) What must immediately follow this activity? The answers to these three questions identify predecessor-successor relationships. Table 4-1 illustrates these relationships for the eleven event project "described" above. Dependency relationships are interpreted as the dependent event requiring the completion of the other related event before it can be initiated.

The information presented in Table 4-1 is much more ordered than that available for the initial perceptions. These relationships can easily be converted into an arrow diagram, the initial portrayal of a CPM network. If an activity or event is denoted as a direct link between two nodes in a network, an arrow indicates the direction of time flow from one event to another, the events being denoted by the nodes (using circles, squares, or some other appropriate symbol). Table 4-1 is translated into an arrow diagram or network in Figure 4-1.

Table 4-1. Linkages and Predecessor-Successor Relationships for an Eleven Event Project.

Activity or Event	Linked to:	Preceded by:	Followed by:
A	C,D,E	C,D	E
B	G,J	J	G
C	I,A	I	A
D	I,A	I	A
E	A,K,F	A,K,F	None
F	H,E	H	E
G	B,K	B	K
H	K,J,F	J	K,F
I	C,D	None	C,D
J	B,H	None	B,H
K	G,H,E	G,H	E

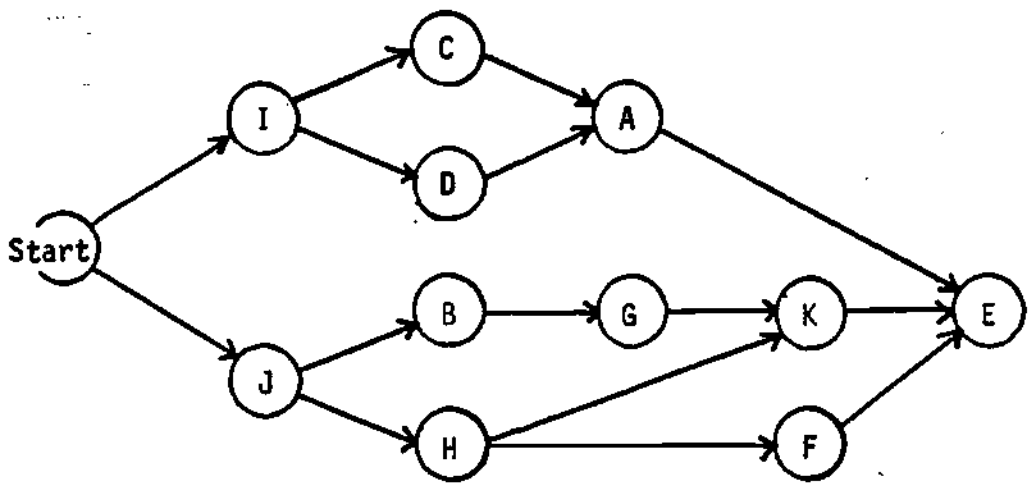

Figure 4-1. Arrow Diagram for Eleven Event Project.

Since the nodes in the arrow diagram represent the completion of an activity, the term "start" is used to anchor the initiation of the network. Each arrow represents a linkage between events; more than one arrow can designate the same activity, e.g., the two arrows that terminate at node A represent the activity A. This approach has certain advantages in determining time durations and in delimiting the critical path as well be illustrated subsequently.

The arrow network is composed of a series of sequential relationships or paths. Each path must be completed in the indicated sequence in order for the various work items to be carried out in the proper relationship one to another, and in order for the overall program to be successfully accomplished. Once the various connections have been drawn, a critical route can be determined and progress can be more easily followed and measured against a list of key check points or milestones.

Dummy Operations

Frequently, various operations or activities evidence a dependence even though they are not directly related. Therefore, it may be important to include some notation of this dependence in the arrow diagram. Such a case is illustrated by the common dependence of activity A on activities C and O. While C and O are not directly related, these activities must both be completed before B can be initated. A dashed arrow frequently is used in activity-on-branch networks (i.e., arrow diagrams in which the activities are designated on the arrows rather than on the nodes) to show this dependence and is called a dummy operation. A dummy operation required no time; it is merely a device to identify a dependence among operations and is introduced into a network to maintain the correct order in a sequence of activities.

One of the major advantages of the activity-on-node network (as illustrated in Figure 4-1) is that dummy operations are seldom needed except in some cases for the initial and terminal nodes. Although the activity-on-node network is not as widely used as is the activity-on-branch approach, it has gained popularity for scheduling projects with activities that have relatively complicated precedence relationships. Since this problem frequently is encountered in the programming of governmental operations, the activity-on-node approach will be utilized throughout the remainder of this presentation. It should be underlined, however, that the methods of computation for activity-on-branch network are very similar to those for the activity-on-node network.

Calculations on the Network

Associated with each arrow in the network is a time estimate called its duration. The duration of an arrow is the amount of time required to complete the operation or activity represented by this arrow.

The next step in the CPM process, therefore, is to assign time estimates to each of the paths. In earlier applications of CPM, three time estimates were used: (a) optimistic, (b) most likely or probable, and (c) pessimistic. Under this approach, the duration of an activity was taken to be the weighted mean value t_e, as calculated by the following formula:

$$t_e = 1/6\ (t_a + 4t_b + t_c).$$

This relationship, first recognized by the management consulting firm of Booz, Allen, and Hamilton, was developed in conjunction with applications of PERT. It is known as the beta distribution through which a normal curve can be constructed having a plus and minus of three standard deviations from the mean. After some experimentation, this approach was generally abandoned in applications of CPM in favor of a single, most likely time estimate. In situations of high uncertainty, however, the three time estimates may be useful to provide further refinement in the determination of activity durations.

Suggested "most likely" times for each of the eleven activities in the previous example have been loaded on to the arrows in the network (Figure 4-2). Note that each arrow (activity) leading to a given node (event or activity completion) is assigned the time duration for the designated activity. No effort has been made at this point to draw the diagram to a time scale.

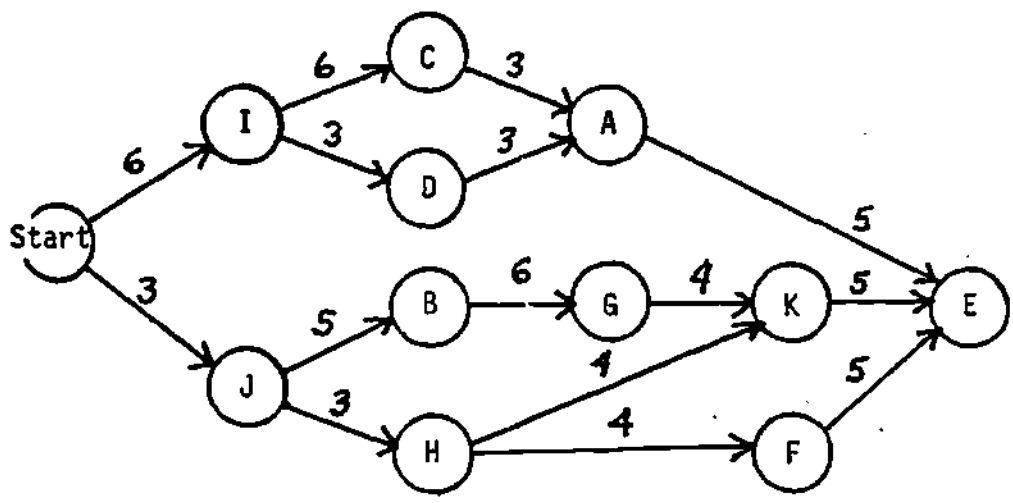

Figure 4-2. Arrow Diagram with Most Likely Time Estimates

An effort should be made to determine: (1) how long it will take to complete the entire project (completion time); (2) which of the operations establish and control the completion time (the critical path); and (3) how much leeway there is in the operations that do not control the completion

time (the "floats"). Beginning at "start", the time durations for each path should be summed to determine the earliest possible time that all activities (arrows) that originate at a given node can be initiated; this is known as the earliest possible occurrence or EPO. In Figure 4-2, for example, the path from "start" to I to C to A would take 15 time units, whereas the path from "start" to I to D to A would take only 12 time units. Therefore, the EPO for node A is 15 time units--activities dependent on the completion of activity A cannot begin until 15 time units into the project. The EPO of the final activity node on the diagram has added significance, since it is the earliest possible completion time for the entire project, i.e., it defines the project duration.

Operational Leeway--Float

Float is the amount of time that an activity can be delayed or its duration lengthened without affecting the EPO of any other activity. To determine this operational leeway, calculation are made by taking the EPO of the final activity node and subtracting the time duration back to the nodes that lead to this final activity. This process is repeated for each node in turn back to "start". These calculations determine the latest possible occurrence or LPO for each node, i.e., the latest possible time that all of the activities that terminate at a given node can finish without causing the project duration to exceed the originally determined completion time. Whereas the EPO is the longest path (time duration) from "start" to a given node, the LPO is the shortest path from the termination of the project back to a given node. The EPO and LPO for each node is illustrated in Figure 4-3. The number above the node indicates the EPO; the number below the node the LPO.

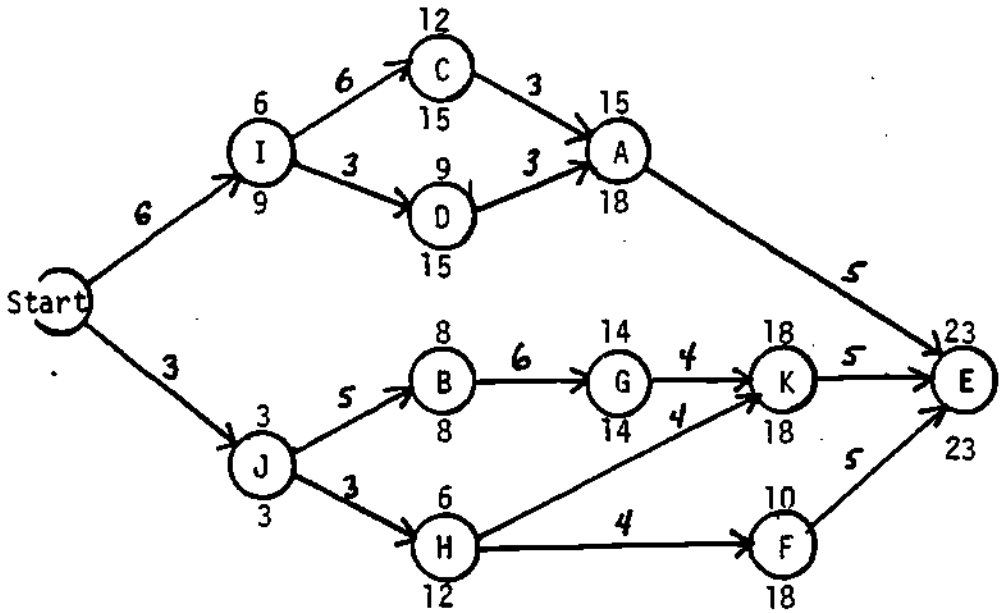

Figure 4-3. Arrow Diagram Showing EPO's and LPO's for Each Activity Node

The Critical Path

It should be clear that no activity with a positive float can control the duration of the entire project. The durations of these activities can be shortened as much as is physically possible or lengthened by an amount equal to the float they possess without affecting the EPO of any other activity. This means that the EPO of the last activity node will not be affected and hence that the project duration will not be altered. This characteristic of float limits the search for "critical" activities to those that have floats of zero.

All activities with zero floats, however, do not control the project duration. The activities that do control are the ones that have zero float and form a continuous path starting at the first activity and ending at the last one. In Figure 4-3, this path is made up of the links between J, B, G, K, and E. If any of these activities are delayed, the project completion time will be increased by the amount of that delay. It is this sequence of activities that defines the critical path.

It is now possible to redraw the arrow network on a time scale that illustrates the relative positioning of each activity node in terms of the total project duration and the critical path (Figure 4-4). The numbers above the nodes indicate the amount of float associated with each node. The critical path is indicated by the cross-hatching (and by the zero float on the nodes).

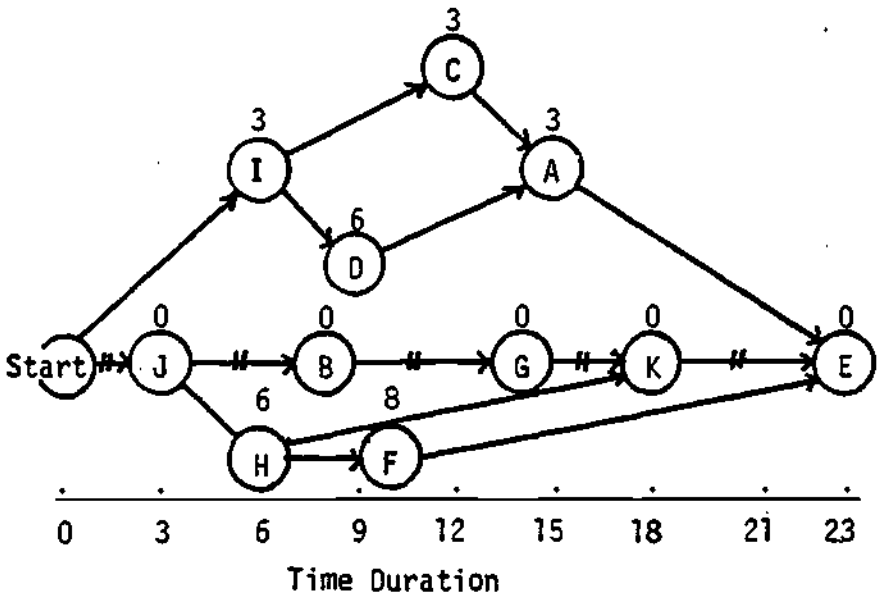

Figure 4-4. Arrow Network Drawn to a Time Scale

The preceding discussion can best be summarized by listing the steps involved in applying the critical path method to a project or program.

(1) Define all of the activities that make up the project or program.

(2) Define the linkages and sequence of performance for each activity.

(3) Draw an arrow diagram that defines the sequence of performing the various activities

(4) Estimate the duration of each activity.

(5) Calculate the EPO of each activity node or event.

(6) Calculate the LPO of each activity node or event.

(7) Determine the float for each activity and locate the critical path.

Once the actual program is placed into operation, the critical path can be continually monitored so that any delays can be determined before they occur. By shifting personnel, materials, or other resource inputs to the critical path or from those paths that have "floats", such delays can be circumvented. Therefore, the identification of the critical path also provides a dynamic control dimension.

In addition, the CPM network offers a convenient form of shorthand for the manager, programmer, and the decision-maker through which a complex set of relations can be expressed. It offers a medium of communication and prognostication, and it facilitates the subdivision of work so that each person and unit involved in the process may proceed with the more detailed planning of his or her own part of the program or project. The CPM approach allows for an analysis of the costs that are involved when an attempt is made to utilize float time in order to reduce overall project costs, or in many instances--where the critical path time is to be reduced--the cost of a crash program. In general, the CPM approach determines the sequential ordering of activities, the maximum time required to complete the job, the costs involves, and the ramifications in time and cost for altering the critical path.

Exercise #1: Arrow Network and Critical Path

Using the table on the following page to delineate the linkages and predecessor-successor relationships, develop the arrow network and determine the critical path for the 19 event project decribed by the following statements:

(1) Event L must follow Event H.

(2) Event O must follow Events B and L.

(3) Event L is concurrent with Events R, M, and S.

(4) Event J is dependent on the completion of Events H and C.

(5) Event Y is the last operation.

(6) Event R must precede Event T.

(7) Events B, H, D, and C cannot be started until Event A is completed.

(8) Event A is the initial event.

(9) Events R, M, and S cannot start until H is finished.

(10) Events S and D must be completed before Event Z can start.

(11) Event U cannot start until Events M, K, and W are finished.

(12) Events B, H, D and C can be performed concurrently.

(13) Event K must follow Event J.

(14) Event Y is dependent upon Events P, V, and U.

(15) Event W must precede Event V.

(16) Event P must follow O and W.

(17) Events T and Z must precede Event W.

Table 4-2. Linkages, Predecessor-Successor Relationships, and Time Durations for a Nineteen Event Project

Activity or Event	Linked to:	Preceded by:	Followed by:	Time Duration
A				3
B				4
C				2
D				3
H				5
J				6
K				3
L				2
M				4
O				3
P				5
R				3
S				2
T				4
U				6
V				3
W				4
Y				2
Z				4

Suggested Solution to Exercise #1

Table 4-2a. Linkages, Predecessor-Successor Relationships, and Time Durations for a Nineteen Event Project

Activity or Event	Linked to:	Preceded by:	Followed by:	Time Duration
A	B,C,D,H	None	B,C,D,H	3
B	A,O	A	O	4
C	A,J	A	J	2
D	A,Z	A	Z	3
H	A,J,L,M,R,S	A	J,L,M,R,S	5
J	C,H,K	C,H	K	6
K	J,U	J	U	3
L	H,O	H	O	2
M	H,U	H	U	4
O	B,L,P	B,L	P	3
P	O,W,Y	O,W	Y	5
R	H,T	H	T	3
S	H,Z	H	Z	2
T	R,W	R	W	4
U	K,M,W,Y	K,M,W	Y	6
V	W,Y	W	Y	3
W	P,T,U,V,Z	T,Z	P,U,V	4
Y	P,U,V	P,U,V	None	2
Z	D,S,W	D,S	W	4

As shown in Figure 4-5, the project duration is 27 time units and the critical path involves the following activities: A, H, R, T, W, U, and Y. This exercise illustrates the advantages of the CPM approach to the programming of related activities over a somewhat less systematic examination of alternatives. Any problem involving a chain of events may be likened to a maze, consisting of a sequence of decision points. At each point, a number of paths are available, but only one can be chosen. One method of finding an optimum solution would be to enumerate each possible path, evaluate the end results according to some predetermined criteria, and then select the best path. Obviously, if the problem contains many decision points and various paths from each of these points, the number of possible combinations becomes enormous. For example, if the 19 activities in Figure 4-5 were considered as distinct decision points, each of which could be made in one

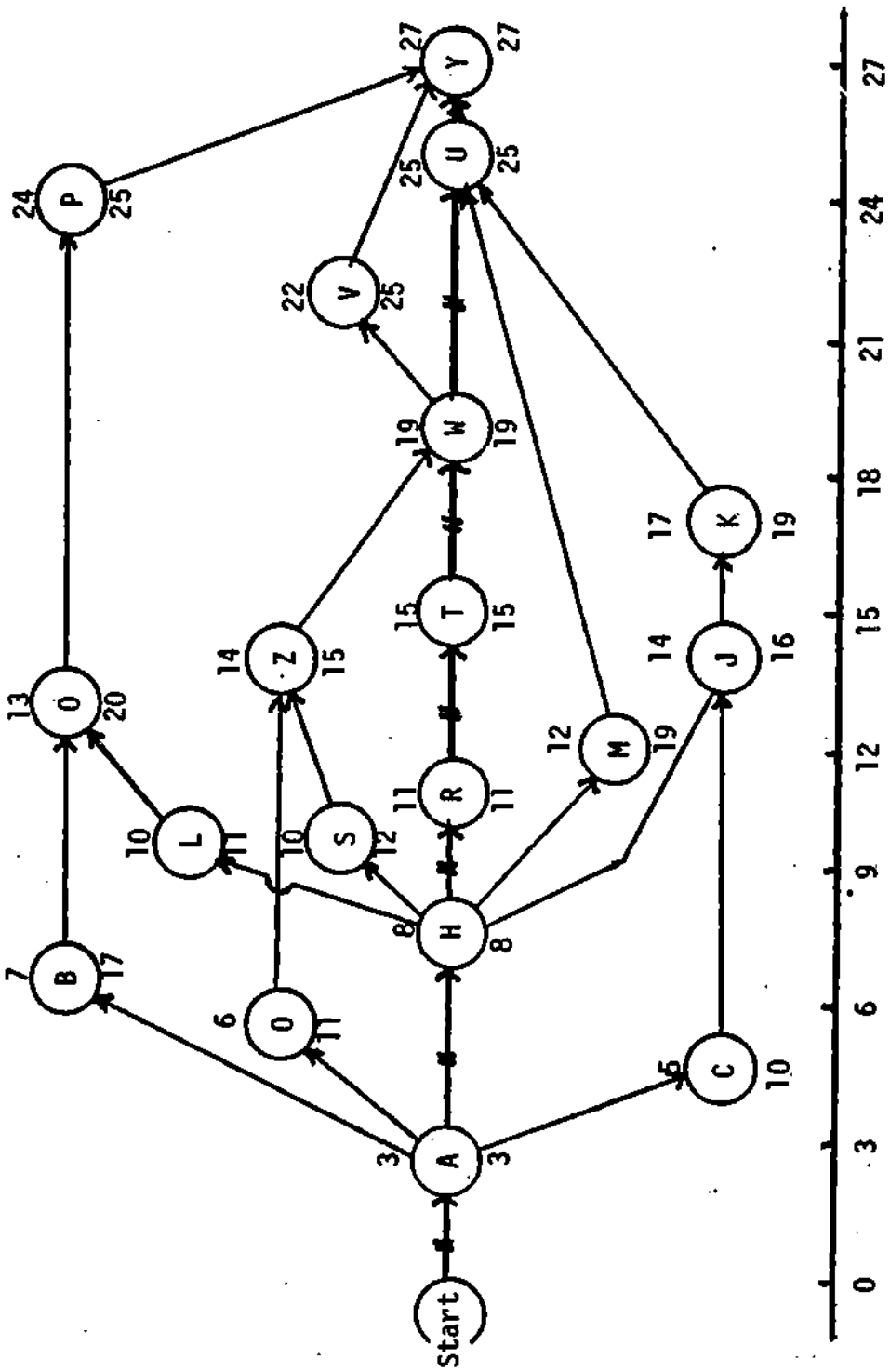

Figure 4-5. Arrow Diagram and Critical Path for 19 Event Project

of two ways, it would be necessary to examine over 262,000 different solutions or combinations of decisions in a complete enumeration. The purpose of CPM is to significantly reduce the complexity of this analysis by first establishing sequential relationships and thereby eliminating many of the possible alternatives. The result is a much smaller maze to be searched.

Programming Limited Resources

While the CPM provides an optimal operations plan, assuming the availability of unlimited resources to complete identified activities, the usual problem facing the public manager is the allocation of scarce resources (and in particular, personnel) among the various programmed activities. This allocation must be made in such a way that the project schedule is maintained, while the resource costs are held to a minimum.

Some fundamental guidelines to assist the manager in this task can be derived from a relatively simple heuristic program which is based on the following rules-of-thumb:

(1) Allocate resources serially in time; that is, for the first time period, schedule all activities possible given the staff (or other limited) resources, then do the same for the second time period, and so on.

(2) When several activities compete for the same resources, give preference to the activities with the least "float" or slack time.

(3) Reschedule noncritical activities (those not on the critical path), if possible, in order to free resources for scheduling nonslack (critical) jobs.

To illustrate the application of these heuristics, assume that the time durations in Table 4-2 represent man-weeks. Further, assume that only three staff members are available to work on this project (and, for simplicity, that their skills are interchangeable). Theoretically, it should be possible to complete the project in under 23 calendar weeks, since a total of 68 man-weeks are involved in all project activities (68 man-weeks divided by 3 staff members equals 22.67 calendar weeks). At various points in the operations plan, however, several activities must be carried out concurrently, requiring careful scheduling of personnel to ensure the minimum "slippage", particularly as related to the critical path. One such staffing pattern is shown in Table 4-3.

In the first week, all three staff members can be assigned to activity A which is on the critical path and the only activity that can be undertaken. In the second week, as shown in Figure 4-5, four activities--H, D, B, and C —compete for the available staff resources. Activity H is on the critical path and therefore should be scheduled first. Activity B has considerable "float" and therefore can be deferred for the time being. In the second and third weeks, one staff member can be assigned to each of the following activities: H, C, and D. With the completion of activity C, activity B

Table 4-3. Personnel Schedule for Nineteen Event Project

Weeks	Personnel Assigned to: Critical Path	Least Slack Activities	Other Activities
1	A (3)	-	-
2	H (1)	C (1)	D (1)
3	H (1)	C (1)	D (1)
4	H (1)	B (1)	D (1)
5	H (2)	B (1)	-
6	R (1)	B (1)	L (1)
7	R (1)	B (1)	L (1)
8	R (1)	S (1)	M (1)
9	T (1)	S (1)	M (1)
10	T (1)	Z (2)	-
11	T (1)	Z (2)	-
12	T (1)	J (2)	-
13	W (1)	J (2)	-
14	W (1)	J (2)	-
15	W (1)	K (2)	-
16	W (1)	K (1)	M (1)
17	-	O (2)	M (1)
18	U (1)	O (1)	V (1)
19	U (1)		V (2)
20	U (1)	P (2)	-
21	U (1)	P (2)	-
22	U (1)	P (1)	-
23	Y (2)	-	-

can be initiated while H and D continue (since all subsequent activities are dependent on the completion of H, an alternative would be to defer the initiation of B and place the additional staff member on activity H). In order to avert a potential "bottleneck", two staff members are assigned in the fifth week to the completion of activity H. while the third member continues on activity B. By the sixth week, a number of activities--L, S. R, M, and J--are competing for the available staff resources. R is on the critical path and should be scheduled first; B should be continued, with one staff member assigned to it; and since L has the least slack or float, this activity should be initiated in keeping with the programming heuristics. The same staff assignments continue in the seventh week. In the eight week, activity R should be continued and activity S initiated since it has minimum float and some "jamming" will occur on the critical path if S is not completed and Z subsequently initiated. At this point, it would be possible to assign two staff members to activity S to complete it in one week, or to initiate some other activity, such as M. The latter tactic is adopted in Table -3; however, this approach requires the reassignment of resources from activity M to activity Z in the tenth week (thus illustrating the third heuristic). Further work on activity M is

then delayed until the sixteenth week. As may be seen from Table 4-3, a one week break occurs in the critical path in the seventeenth week. Given the staff resources available, there is no way to avoid such a break at some point in the project. Even so, the project can be completed in 23 weeks.

There is a temptation to schedule activities on the critical path on a "crash" basis, i.e., to use all available staff resources to complete the critical activities as they occur in the operations plan. Depending on the nature of the project, however, such "crash scheduling" may merely result in a shift in the critical path to other activities having minimum slack. It also may produce a "staffing overload", whereby too many resources are assigned over too short a time period, resulting in inefficiencies as staff members get in each others way. Crash scheduling at the project outset uses up a management option that may be important subsequently when the project is operational, i.e., the ability to "crash" on a critical path activity when it falls behind schedule.

Exercise #2: Critical Path and Personnel Schedule

The linkages and predecessor-successor relationships for the twenty event project shown in Table 4-4 have been converted into an arrow network (Figure 4-6). Applying time durations (man-weeks) given in Table 4-4, the exercise assignment is to identify the critical path, determine the "floats" and project duration, and prepare a personnel schedule that would permit completion of the project in the shortest calendar time utilizing four staff members (with interchangeable skills).

Table 4-4. Linkages, Predecessor-Successor Relationships, and Time Durations for a Twenty Event Project

Activity or Event	Linked to:	Preceded by:	Followed by:	Man-Weeks
A	J,O,S	J,O	S	6
B	C,M,O	C,M	O	2
C	B,D,P	P	B,D	8
D	C,J	C	J	6
E	I,M,O,R	M	I,O,R	9
F	G,K	K	G	4
G	F,I,R,S	F,I,R	S	2
H	K,L,M,R	L,M	K,R	4
I	E,G	E	G	5
J	A,D,N	D	A,N	6
K	F,H	H	F	2
L	H,P,T	P	H,T	4
M	B,E,H,P	P	B,E,H	6
N	J,Q	J	Q	8
O	A,B,E	B,E	A	16
P	C,L,M	(None)	C,L,M	9
Q	N,S	N	S	6
R	E,G,H	E,H	G	3
S	A,G,Q	A,G,Q	(None)	15
T	H,L	L	H	3
		Total Man-Weeks		124

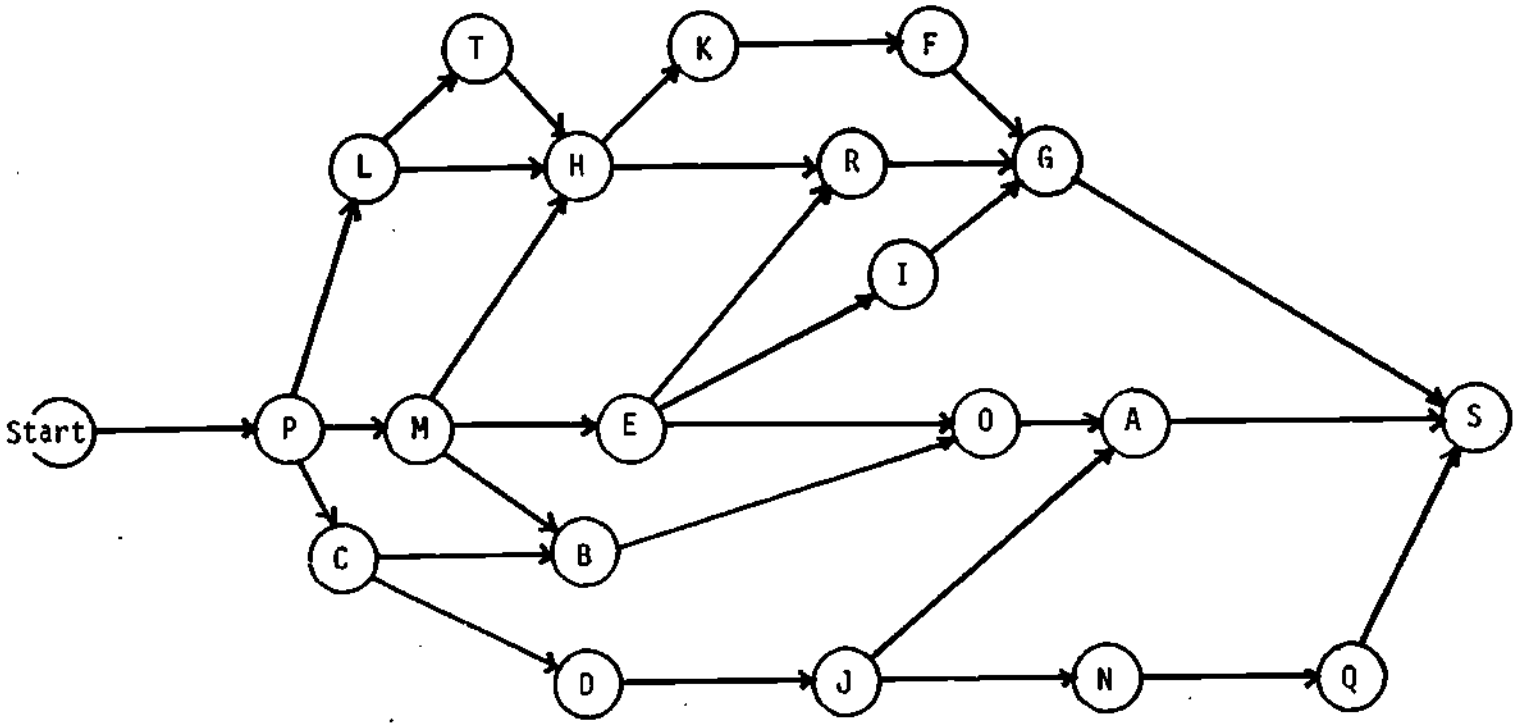

Figure 4-6. Arrow Network for Twenty Event Project.

Suggested Solution to Exercise #2

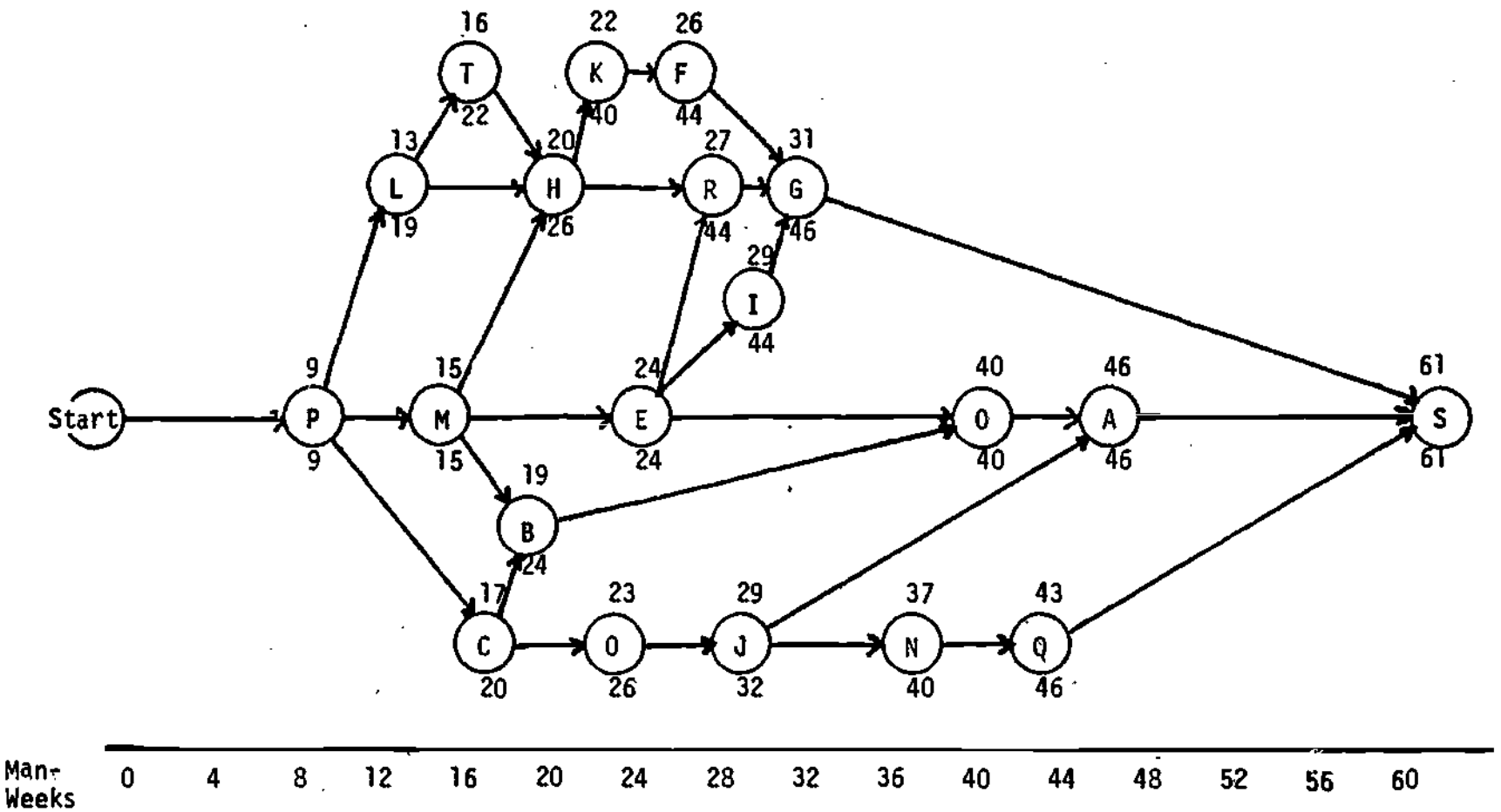

Figure 4 -7. Arrow Network, Critical Path, EPO's and LPO's for 20 Event Project

Table 4-5. Personnel Schedule for Twenty Event Project

Weeks	Personnel Assigned to: Critical Path	Least Slack Activities	Other Activities
1	P (2)	-	-
2	P (3)	-	-
3	P (4)	-	-
4	M (2)	C (2)	-
5	M (2)	C (2)	-
6	M (2)	C (2)	-
7	E (2)	C (2)	-
8	E (2)	B (2)	-
9	E (2)	L (2)	-
10	E (2)	L (2)	-
11	E (1)	D (2)	T (1)
12	O (2)	D (1)	T (1)
13	O (2)	D (1)	T (1)
14	O (2)	D (1)	H (1)
15	O (2)	D (1)	H (1)
16	O (2)	-	H (2)
17	O (1)	J (2)	K (1)
18	O (1)	J (2)	K (1)
19	O (1)	J (1)	F (2)
20	O (1)	J (1)	F (2)
21	O (1)	R (3)	-
22	O (1)	N (1)	I (2)
23	A (1)	N (1)	I (2)
24	A (1)	N (2)	I (1)
25	A (1)	N (1)	G (2)
26	A (1)	N (3)	-
27	A (1)	Q (3)	-
28	A (1)	Q (3)	-
29	S (4)	-	-
30	S (4)	-	-
31	S (4)	-	-
32	S (3)	-	-
Totals	(61)	(40)	(23)

Three weeks are required to complete activity P, the initial activity on the critical path. As a consequence, 32 calendar weeks are required to complete the project. The suggested personnel schedule "front-loads" the critical path during the first sixteen weeks of the project, i.e., assigns at least two of the four staff members to activities on the critical path. This tactic insures sufficient momentum to initiate activities off of the critical path in adequate time to maintain the operations plan.

ESTIMATING TIME DURATIONS: THE PROBLEM OF UNCERTAINTY

Often a program manager or analyst may be unable to predict the exact time duration of any given activity in a program or project. The time estimate chosen will reflect the most probable value of an unknown distribution function. If the variance of this distribution is relatively small, the most likely time duration may provide a reasonably close approximation of the actual time required to complete the activity in question. If the variance is large, however, the duration is said to be on the verge of being stochastic, i.e., subject to the bane of the manager's existence--uncertainty.

The problem of uncertainty in assigning time estimates to various program activities frequently is cited as a "justification" for not applying network analysis techniques, such as CPM and PERT, in the public sector. This arguement is fallacious by its very nature--it is because of uncertainty in time estimates that these techniques were first developed and applied in the private sector.

Use of the Beta Distribution

It is virtually impossible to determine exactly the distribution function and variance of given activities in any situation. Even if these data were available during the planning stages (an extremely remote likelihood), their validity could be open to question and the cost of attempting to use them wholly impractical during the actual program.

Therefore, two possibilities exist: (1) to use a single time estimate; or (2) to assume some form of probability distribution function and proceed to establish a range of confidence. The original PERT development team took the latter approach. One of its assignments was to estimate time requirements to achieve any given event, together with a measure of uncertainty. These efforts led to the adoption of the so-called beta distribution formula as shown below

$$t_e = 1/6\ (t_a + 4t_b + t_c).$$

The expected time formula is based on the premise that the duration is unimodal (i.e., only one mode exists--b) and that the variance of the distribution can be estimated as roughly one-sixth of the range. In this case, the range is the difference between the most optimistic (t_a) and most pessimistic (t_c) time estimates

The beta distribution formula is applied under the following assumptions:

(1) In most cases, the distribution will be asymmetrical, with the expected value falling between the most likely (mode) and the pessimistic time estimates, resulting in a distribution that is skewed to the left.

(2) The expected value is used in its statistical sense--there is a fifty percent probability that the time estimate (t_e) will be exceeded by the actual duration.

To gain a clearer understanding of how the beta distribution formula can be applied under conditions of uncertainty, consider the following three examples. In the first example, assume that the most optimistic time for completion of some project or task is twenty days; the most likely time in the judgment of the analyst is thirty days; and the most perssimistic time, forty days. Applying the formula for t_e the estimated time for completion would be thirty days (i.e., 20 + 4(30) + 40, divided by 6). Thus the most likely time and the computed time estimate are the same, which follows from the fact that the distribution of variance approximates a normal curve. The standard deviation in this example is 3.33 days (i.e., the most pessimistic time minus the most optimistic time, divided by six).

In the second example, assume that the most optimistic and most likely time estimates remain the same (20 days and 30 days respectively), but that due to uncertainty surrounding the completion of various tasks, the most pessimistic time estimate is extended to fifty-eight days. Since these conditions result in a distribution that is skewed to the left, the computed time estimate, t_e, lies to the right of the most likely time (i.e., t_e is larger than the most likely time). Applying the beta distribution formula, t_e equals thirty-three days (i.e., 20 + 4(30) + 58, divided by 6). The standard deviation in this case is 6.33 days.

In the final example, the most likely and pessimistic time estimates are the same as in the first example (30 and 40 days respectively), while the most optimistic time estimate is reduced to eight days. This results in a distribution which is skewed to the right, with t_e at twenty-eight days being smaller than the most likely time. The standard deviation in this case is 5.33 days (i.e., 40 minus 8, divided by 6).

Relationship Between Expected Time and Variance

As may be seen from these three examples, expected time and variance, although statistically related, act somewhat independently in real-world situations. Expected duration or expected time is a statistical term that corresponds to "average" or "mean" in common language. Variance, on the other hand, is a measure of uncertainty; if the variance is large, there is greater uncertainty as to the time in which an activity will be completed. If the variance is small, it follows that the uncertainty will be small. Thus, although the t_e in the third example is less than in the first (28 days as compared with 30 days), there is greater uncertainty in the third example, as illustrated by the larger variance (i.e., the square of the standard deviation or 28.41 days).

The variance for each activity can be used to develop a probability of completion by some imposed completion date or deadline which may be imposed an an external constraint to any given program or project. The following procedures are applied:

(1) Use three time estimates for each activity to determine the single applicable value of t_e for that activity.

(2) Caluculate the Earliest Possible Occurrence (EPO) and Latest Possible Occurrence (LPO) for each event or activity node and find the critical path.

(3) Using the concept of variance, evaluate the risk or probability of meeting a specific schedule time (S).

To fully understand this notion of risk, particular consideration must be given to the third step in the procedures outlined above.

Risk is defined in terms of probability. By subtracting the earliest possible occurrence of any given event or activity node from some imposed schedule completion time (S) and dividing the result by the standard deviation for that event or activity node, an F value can be determined. By consulting a table of values for the normal curve, this F value can be interpreted in terms of the probability of meeting the imposed schedule (S).

To illustrate these procedures, assume that the project duration of 61 days in Exercise #2 has a standard deviation of 10 days. What is the probability of completing this project in 55 days? The calculations to determine the F value are as follows:

$$F = \frac{\text{Imposed Schedule Deadline minus Expected Duration}}{\text{Standard Deviation of Expected Duration}} = \frac{55 - 61}{10} = -0.6$$

From a table of values for the standard normal distribution function, it can be determined for an entry of - 0.6 that the value is .2743. In other words, there is approximately a 27.5 percent chance of the project being completed in 55 weeks.

Assume that with an estimated project duration of 61 weeks the project manager is given 65 weeks in which to carry out the assignment (again with a standard deviation of 10 weeks in terms of the expected duration). What is the probability of completing the project within this extended time allocation? The F value of 0.4 in this case has a value in the table of the normal distribution function of .6554; in other words, increasing the time duration to 65 weeks raises the probability of success from 50 percent to 65.5 percent.

This method of assessing risk can be applied in reverse to determine an appropriate duration for any element in a project (or the total project duration), given some acceptable level of risk (as determined by the project manager or decision-makers). Again using the expected project duration in Exercise #2, assume that a 25 percent risk level is chosen. What time duration should be allowed for the completion of the project? The appropriate formula is as follows:

$$\text{Imposed Schedule Deadline} = F(\text{Standard Deviation of } t_e) + t_e$$

The F value for a 25 percent level of risk (i.e., 75 percent probability of success) is approximately 0.675. Therefore, the project duration to achieve this projected level of success would be 0.675(10) plus 61 or 67.75 days. To raise the probability of success to a 90 percent level would require approximately 13 additional days over the initial project duration estimate (1.285(10) plus 61 = 73.85 days). To approach a success level of 100 percent, however, would require over 39 additional days beyond the estimated project duration.

This brief discussion provides an important insight into the concept of risk based on the normal distribution function. While it may be possible to reduce the level of risk (increase the probability of success) from the 50 percent level assumed by the beta distribution by adding a relatively small amount of time to the estimated project duration (t_e), beyond the 90 percent level of success, the increments of time required become increasingly larger, often beyond any realistic expectations. Changes in the standard deviation of the expected duration will have a significant impact on the additional time required to increase the probability of success. Reducing the standard deviation (reducing uncertainty) will reduce the additional time duration required for any chosen level of success.

An Appraisal of the Three Time Estimate Approach

There is considerable controversy concerning the use of one or three time estimates; arguments on both sides are imposing. The most important fact, however, is not whether one or three time estimates is better, but rather the objective in using either technique. There are not exact rules of usage, only guidelines based primarily on common sense. Consider the possibilities:

(1) In cases where there is little or no uncertainty, only one time estimate should be used. For most projects or programs, prior experience will provide a sufficient basis for developing time estimates with adequate certainty.

(2) In cases where there is little or no prior experience, three time estimates may provide a desirable level of improvement in the formulation of time estimates. The fundamental question is whether or not three time estimates will truly reduce uncertainty.

(3) While the use of three estimates may result in an apparent improvement in accuracy, the value derived for the expected duration can vary measurably according to how the manager selects the values of <u>most likely time</u> in the range of <u>optimistic</u> to <u>pessimistic time</u>.

(4) The choice of the <u>beta distribution</u> is based on the assumption that <u>estimated times</u> are exceeded more often than they are not. It is questionable whether this excess is the result of uncertainty or of oversight and poor management.

The concepts of pessimistic and optimistic time are not defined as clearly as that of most likely time. Two technically qualified program managers would be likely to give quite similar estimates of the most likely time required to perform any given activity. Their estimates of the optimistic and pessimistic times, however, may differ considerably. Such differences not only will affect the resultant calculations of expected duration, but also will seriously impact the variance calculations, which leads to a wide spread in the calculated probabilities of achieving an activity completion by some required date.

The consequence of using the three time estimates is to give a more pessimistic outlook than would be obtained from using only the most likely duration. In most instances, the project manager should use the best time estimate possible and then control the project in a dynamic fashion. In short, regardless of how the estimate of duration is obtained, the real task lies in the control of the project once it is initiated.

Exercise #3: Beta Distribution and the CPM

Using the data presented in Table -6, the exercise assignment is to calculate expected times (t_e) and standard deviations for each of the seventeen activities, based on the three time estimates provided. Using this information, the total project duration and the critical path should be identified for the relationships among these activities shown in Figure -8. Expected times should be denoted for each activity (arrow leading to a given node), and by tracing the cumulative times for each path in the diagram, the critical path and total project duration should be readily identifiable. A suggested solution follows the arrow network.

PROGRAM MANAGEMENT AND CONTROL

Program management is best served by a real-time control system--one which makes it possible to respond to situations according to their degree of urgency. If immediate response is required, the control system should give management the means to provide it. If no action is required or if the program is self-correcting, management need not even be informed. This is management by exception as it should operate.

The Control Cycle

Control encompasses all phases of the project from conception to completion. It is a cycle that begins with the setting of objectives and terminates only when the last activity has been successfully completed. Throughout each phase of the operation, the system must provide management with the capacity to respond to any situation which arises.

The first element in this dynamic cycle is the arrow netowrk which provides the basis for the overall plan of operations or working model of the program. Estimates of time and cost, derived from the necessary methods of operation for each activity, are added to the network. From this information, the start and completion times for the various activities can be calculated, which in turn serve to identify the critical and non-critical activities.

Table 4-6. Optimistic, Most Likely, and Pessimistic Time Estimates for a Seventeen Event Project: Man-Days

Event	Optimistic Time	Most Likely Time	Pessimistic Time	Expected Time	Standard Deviation
A	26	36	70		
B	20	39	64		
C	10	20	60		
D	27	40	83		
E	10	30	50		
F	20	25	30		
G	8	14	26		
H	6	24	48		
I	20	52	72		
J	26	40	54		
K	16	36	50		
L	22	28	46		
M	6	14	28		
N	7	13	31		
O	15	27	57		
P	6	16	20		
Q	13	20	27		
Totals	258	474	816		

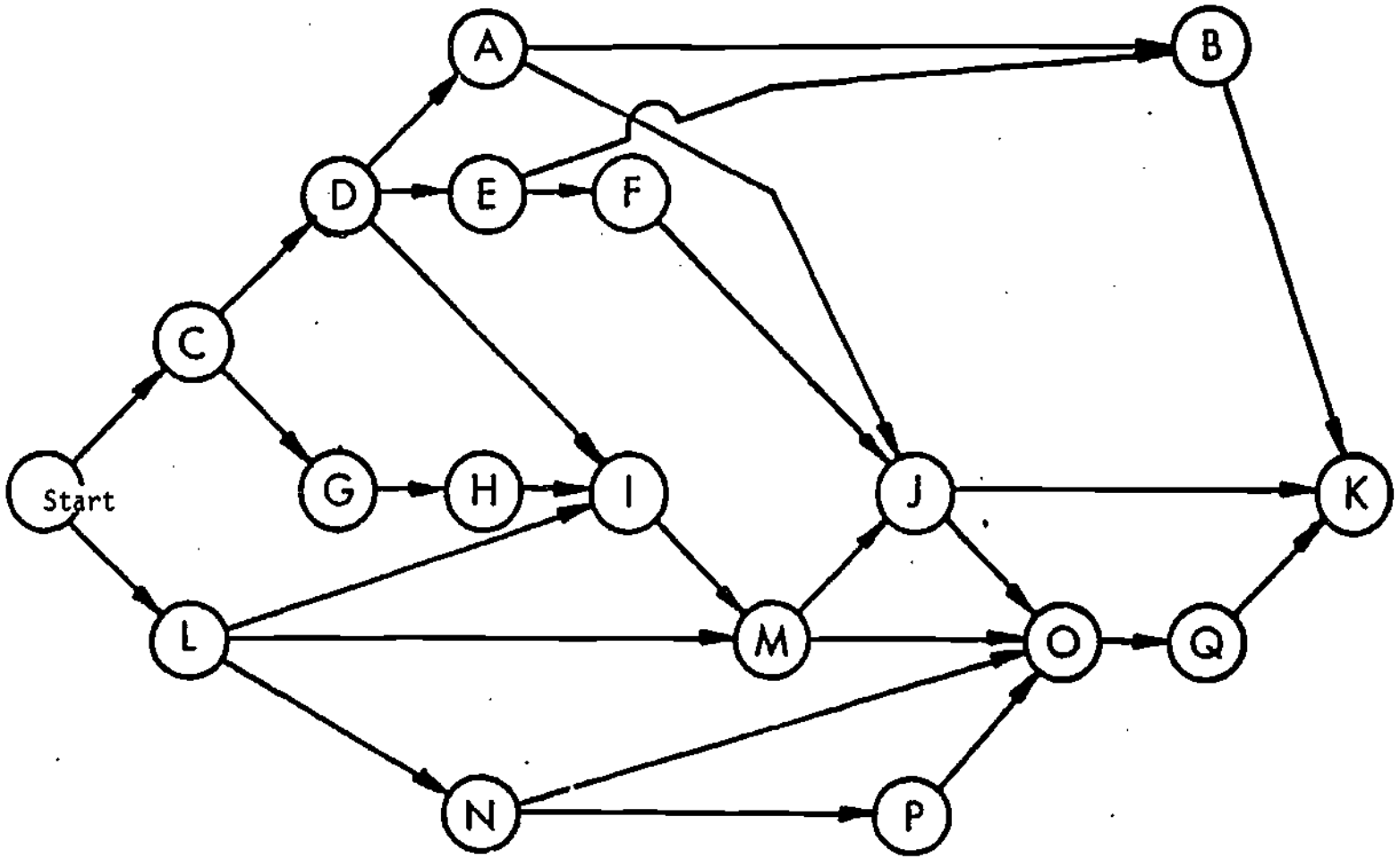

Figure 4-8. Arrow Network for Seventeen Event Project.

Table 4-7. Expected Times and Standard Deviations for Seventeen Event Project: Man-Days

Event	Optimistic Time	Most Likely Time	Pessimistic Time	Expected Time	Standard Deviation
A	26	36	70	40	7.333
B	20	39	64	40	7.333
C	10	20	60	25	8.333
D	27	40	83	45	9.333
E	10	30	50	30	6.667
F	20	25	30	25	1.667
G	8	14	26	15	3.000
H	6	24	48	25	7.000
I	20	52	72	50	8.667
J	26	40	54	40	4.667
K	16	36	50	35	5.667
L	22	28	46	30	4.000
M	6	14	28	15	3.667
N	7	13	31	15	4.000
O	15	27	57	30	7.000
P	6	16	20	15	2.333
Q	13	20	27	20	2.333
Totals	258	474	816	495	93.000

Suggested Solution to Exercise #3

The appropriate time calculations for the data in Table 4-6 are shown in the table above. By assigning these expected times to the appropriate arrows in Figure 4-8, the EPO's and LPO's for each activity node or event can be calculated. The total project duration is 260 weeks, with the critical path being events C, D, I, M, J, O, Q, and K.

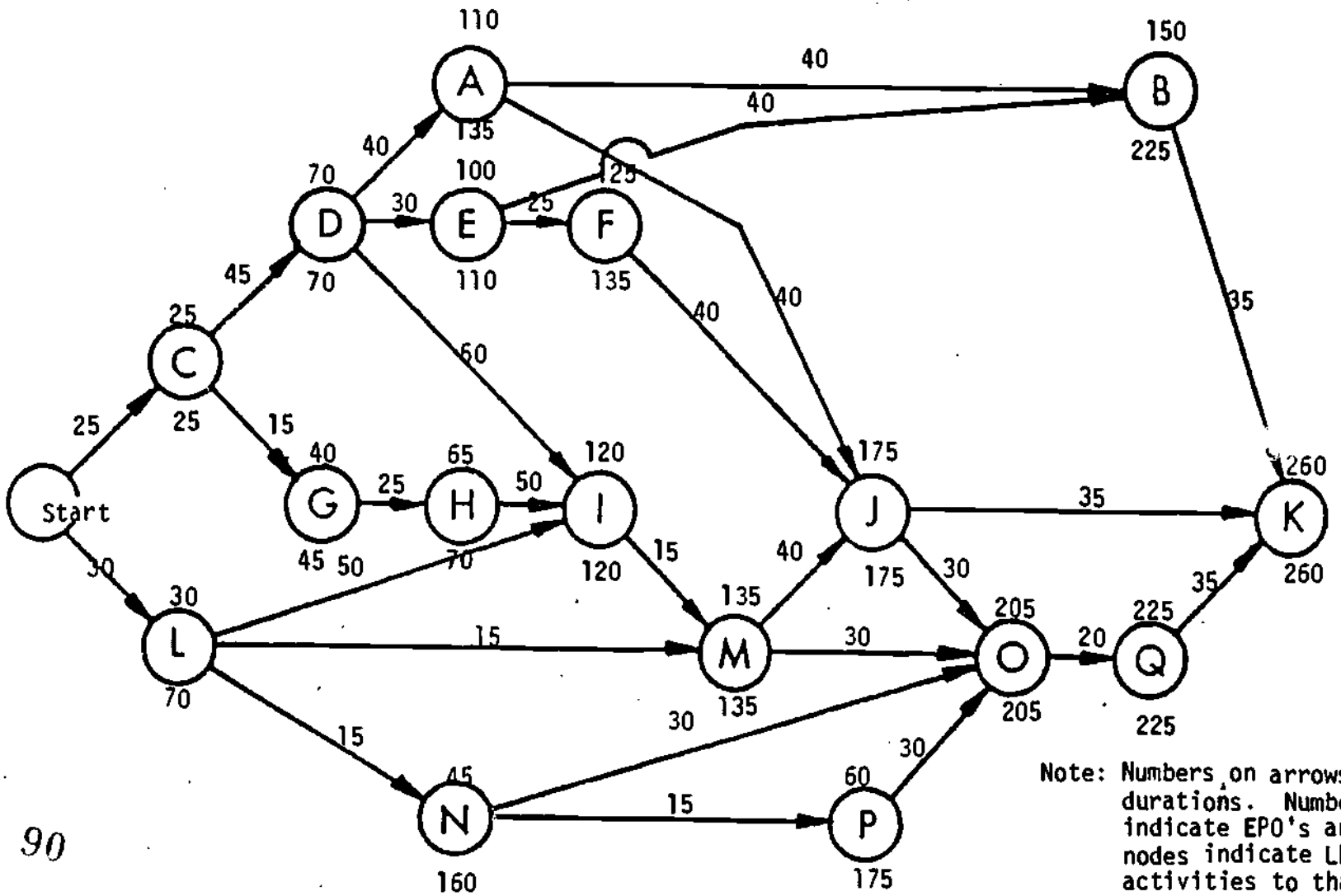

Note: Numbers on arrows equal activity durations. Numbers above nodes indicate EPO's and numbers below nodes indicate LPO's for all activities to that node.

Figure 4-9. Critical Path for Seventeen Event Project (C,D,I,M,J,O,Q,K)

SUMMARY AND CONCLUSIONS

Program management involves the judicious allocation of resources to accomplish pre-selected objectives according to an operations plan and schedule and the ability to react to deviations between the predicted and actual results to forestall unfavorable situations. As such, a balance between subjective ability and objective (or scientific) method is required.

PERT and CPM--if used properly--are powerful tools for program management. To be used, they must be understood; after that, as with any other tool, it is a question of effective application--effort and thought. There are two significant fallacies, however, in applying these management techniques: (1) assuming that these methods will do everything; and (2) assuming that they cannot help at all. CPM and PERT at times are criticized as being not all that useful because they cannot prevent such problems as missed target dates, cost overruns, or program delays. The fact of the matter is that no method will ever eliminate or prevent these problems of program management. The idea is to attack such problems methodically: this is the essence of good management.

Through the mechanisms of CPM or PERT, operations and contraints are combined to produce a range of alternatives reflecting various expenditures of time and resources. When management selects one of these alternatives, resource needs and their order of commitment will be known. Through the application of heuristic programming techniques, resources can be allocated to program activities in order to formulate a schedule. If problems arise in the allocation procedures (due to resource limitations), alternative schedules must be formulated. The dynamic cycle of planning, scheduling, and control can be used as a simulation device to: (1) establish the best resource level to assign to a program; and (2) determine the best use of resources in the scheduling of each activity in the program. These procedures provide a means of projecting the results of a decision before final commitments are made. As a consequence, all program elements can be coordinated toward the completion of the overall program in the best time and at the least cost.

Once a schedule has been approved, a time scale diagram can be produced which provides a visual assimulation of the program for all levels of management. Progress reports can be posted on the diagram at regular intervals, and the actual results compared with the estimates or exceptions for the original plan. Management is thus equipped with specific knowledge of the situation and is in a position to act. There is no need to wade through a sea of irrelevant data to find that everything is running smoothly.

In the final analysis, however, the dynamic cycle of planning, scheduling, and control is still a tool that is only as good as the managers who use it. The system cannot make decisions, but it can provide better information on which to base decisions. It does not provide a substitute for effective program supervision, but it will show where responsibilities

are not being met. Best of all, these are relatively simple techniques to learn and use--ones that will improve communications at all levels of an organization in the implementation of policies and programs.

The complexities of government and increased demands for more effective utilization of limited public resources demand a new breed of public management. This new breed cannot afford to operate on its wits alone as public management in the past may have been able to do. Whether they like it or not, members of this new breed are compelled to understand and to use all the management techniques at their disposal. A new project cannot be initiated, a structure erected, or a program successfully launched unless there is a plan and a schedule of work to permit the exercise of dynamic management control throughout the project/program duration.

CASE STUDY #3: OPERATIONS PLANNING AND CONTROL

A General Development Plan, prepared by consultants for the City of Rurbania in the early sixties, is now largely out-of-date and does not adequately reflect changes that have occurred in the past fifteen years (including a number of areas which have been annexed by the city during this period). Therefore, the City Council has authorized the formulation of a new comprehensive development plan. Manny Colemike, Assistant Director for Long-Range Planning, has primary responsibility for those elements of the Overall Program Design (OPD) of the Department of Budget and Planning which relate to the formulation of the comprehensive plan. Work items from the OPD to be undertaken in the formulation of this new comprehensive plan are outlined on the following pages. It is anticipated that this work will be accomplished during the next 18 months (78 weeks), during which period the following staff time will be made avialble to work on the comprehensive plan.

Code	Position	Man-Weeks	Annual Salary
AD	Assistant Director	78	$22,100
PP	Principal Planner	52	$18,200
SP-1	Senior Planner	52	$15,600
SP-2	Senior Planner	26	$15,600
AP-1	Assistant Planner	78	$12,220
AP-2	Assistant Planner	26	$12,220
PA-1	Planning Aide	26	$ 9,880
PA-2	Planning Aide	26	$ 9,880
D-1	Draftsman	39	$ 8,580
D-2	Draftsman	39	$ 8,580

An estimate of the time required to complete each work element (in man-weeks) has been included in the work outline of the OPD. In addition to the overall constraints of time (18 months) and available staff, the City Council has allocated $100,000 to cover staff salaries (exclusive of secretarial and other clerical personnel).

Mindful of the problems of missed deadlines and project delays which often are encountered in a planning project such as outlined in the OPD, Manny Colemike decided to use the techniques of the CPM to organize the various work elements into a more coherent operations plan and schedule of personnel requirements throughout the project duration. His first step was to reorganize the work elements presented in the OPD outline into "project tasks", i.e., groupings of work elements sharing similar objectives that could be undertaken by teams of staff members. For purposes of his analysis, Colemike grouped the work elements into six project tasks (A through F), as shown in the tables which follow the case study narrative.

The next step was to determine the staff requirements for each project task--these data are shown on page VI.10.80 . From this summary, it may be determined that 350 man-weeks will be required to complete the comprehensive plan.

OVERALL PROGRAM DESIGN

Work Elements Related to Comprehensive Plan

I. Data Collection and Base Mapping

A. Preparation of Base Maps (8 man-weeks): development of base maps incorporating the newly annexed areas of the city to be used for the plotting of data and in the preparation of functional plans.

B. Extrapolation of Census Data (10 man-weeks): up-date of Census data on population and economic characteristics of the city to reflect current conditions.

C. Collection of Data on Economic Dominants and Subdominants (10 man-weeks): application of economic base analysis techniques developed by Richard B. Andrews to provide more current basis for economic analysis and projections.

D. Development of Planning Information System (6 man-weeks): coding of data and design of information system to periodic up-dating of information base.

II. Inventory and Analysis of Existing Policies

A. Analysis of Policies Related to Development and Capital Expenditures (16 man-weeks)

(1) Legislative policies;
(2) Administrative policies;
(3) Judicial policies; and
(4) Intergovernmental policies.

B. Classification of Policies by Content Area (28 man-weeks)

(1) Land use and open space;
(2) Natural resources;
(3) Housing and community development;
(4) Economic development;
(5) Public service delivery;
(6) Transportation and circulation;
(7) Recreation; and
(8) Human resources.

C. Analysis of Status and Effectiveness of Policies (12 man-weeks)

D. Analysis of Areas of Policy Conflict (10 man-weeks)

III. Identification of Community Goals and Objectives

A. Community Attitudes Survey (20 man-weeks): a basic survey of community attitudes toward the future of Rurbania.

B. Neighborhood Meetings (12 man-weeks): a series of meetings with community leaders in various sectors of the city to determine appropriate goals and objectives.

C. Citizens Planning Advisory Committees (16 man-weeks): establishment of subcommittees of the Planning Commission to delineate goals for various functional areas of the comprehensive plan.

IV. Survey of Existing Conditions

A. Survey of Existing Land Use (20 man-weeks): mapping of existing land utilitzation within the city and its immediate environs.

B. Vacant Land Survey (8 man-weeks): inventory of land development potential of lands currently vacant, including status report of public improvements and holding capacity of each site.

C. Housing Survey (12 man-weeks): inventory of housing conditions, including delineation of current and future housing problems.

D. Social Impact Study (8 man-weeks): inventory of particular social problems and their potential impacts on future development.

E. "Special Needs" Studies (8 man-weeks): inventory of idenitifiable needs relating to particular segments of the population (e.g., the elderly, minority groups, unemployed, etc.).

F. Identification of Regional Development Trends (6 man-weeks): compilation of identifiable regional trends from studies made at the state level, by universities and other research agencies, etc.

V. Analysis and Projection Phase

A. Population and Economic Analysis (12 man-weeks): review, analysis, and interpretation of available population and economic data in order to develop basis from which to evolve rationale for future action.

B. Land Capabilities Study (8 man-weeks): analysis of overall "holding capacity" of developed and undeveloped areas within the city and its immediate environs, with recommendations for future annexation, where applicable.

C. Physical Characteristics Study (6 man-weeks): analysis of nature, extent, and quality of natural resources in order to correlate current status, projections, and developmental proposals.

D. Transportation and Circulation Study (8 man-weeks): analysis of extent and adequacy of existing transportation networks and facilities.

E. Neighborhood Analysis (12 man-weeks): in-depth analysis of community needs evidenced in various neighborhoods within the city.

F. Community Facilities Analysis (10 man-weeks): analysis of public facilities and services currently provided within the city and its environs.

G. Economic Projections (6 man-weeks): twenty year projections of economic activities by basic industrial categories (e.g., manufacturing, trade, services, extractive industries, etc.) and by occupational groupings.

H. Population Projections (6 man-weeks): twenty year projections of age-sex cohorts in five year intervals.

I. Projection of Land Use Needs (10 man-weeks): projections of land utilization for residential, commerical, industrial, open space, recreation, and public facilities to the year 1985 and the year 1995.

J. Projection of Community Facility Needs (8 man-weeks).

K. Projection of Community Renewal Needs (4 man-weeks).

L. Preparation of Environmental Impact Statement (4 man-weeks): up-date of existing EIS to reflect specific proposals embodied in the comprehensive plan.

M. Extrapolation of Social Impact and "Special Needs" Studies (6 man-weeks).

VI. Plan Formulation Phase

A. Development of Plan Alternatives (10 man-weeks): formulation and testing of various development alternatives for the City of Rurbania and its environs.

B. Evaluation of Plan Alternatives (12 man-weeks): interface of planning studies with studies of community goals and objectives.

C. Preparation of General Development Plan (6 man-weeks): final summation of studies and projections, highlighting policy guidelines and procedural steps for implementation.

D. Formulation of Capital Improvements Program (6 man-weeks): formulation of inputs to be utilized by the CIP staff in the development of the next six-year capital improvements program and capital budget.

E. Preparation and/or Up-dating of Zoning Ordinance and Subdivision Regulations (6 man-weeks).

Table 4-8. Summary of Staff Requirements for Project Tasks

Project Task	Man-Weeks
A. Socio-Economic Analysis	72
B. Land Use Analysis	72
C. Community Development & Service Delivery	52
D. Inventory & Analysis of Policies	66
E. Identification of Goals & Objectives	48
F. Plan Formulation & Implementation	40
Total	350

While 442 man-weeks of staff time have been made available to undertake this project, only 350 man-weeks are required. Therefore, some selectivity can be exercised in making initial staff assignments. The staff assignments made by Colemike are shown in Table 4-9. Having made these initial staff assignments, it was possible for Colemike to calculate the cost of each project task and thus, the total cost of the project. Using the staff distribution shown in Table 4-9, the total project cost is $90,840, and therefore, the funding constraint of $100,000 for staff salaries can be met.

To insure that the initial assigments of staff to the various project tasks was valid, the next step taken by Manny Colemike was to make staff assignments to each of the project elements that make up the project tasks. These assignments are shown on the detailed tables that follow the staffing summary. At this point, it was possible for Colemike to make adjustments in staffing requirements and cost data before the operations plan and schedule was finalized. To aid in the development of a CPM for this project, Colemike formulated an arrow network or flow diagram for each project task, as shown at the bottom of the data sheets for each task. These diagrams provide some indication of the overall calendar time required for each project task. Since the six project tasks are interactive, i.e., outputs from various project elements of one task form inputs to elements in other tasks, the final arrow diagram is more than merely the consolidation of the individual flow diagrams for each project task. However, this task related approach often is a useful intermediate step in more complex projects. The arrow network for the total project is shown on page VI.10.

SCENARIO #3 : PROJECT DURATION CONSTRAINT

After completing his initial analysis, the Director of Planning called Manny Colemike into her office and informed him that the City Council has voted matching funds for an extensive sewer and water project, the federal funding of which is dependent upon an up-to-date comprehensive plan for the city. The scenario assignment is to determine if the project outlined in the OPD can be completed in twelve months (rather than the initial 18 month project duration) and if so, what additional resources will be required (i.e., additional staff and funds).

Table 4-9. Summary of Staffing Requirements and Cost Data

	Project Task Costs	$16,020	$15,720	$11,440	$20,130	$17,100	$10,430	$90,840
Staff	Time Available	Tasks A	B	C	D	E	F	Totals
Assistant Director	78				4	30	4	38
Principal Planner	52				28		4	32
Senior Planner-1	52		18	12	10	6	6	52
Senior Planner-2	26	18			4		4	26
Assistant Planner-1	78		18	12	10	6	6	52
Assistant Planner-2	26	18			4		4	26
Planning Aide-1	26	6	6	8		6		26
Planning Aide-2	26	12		8	6			26
Draftsman-1	39		24	6			6	36
Draftsman-2	39	18	6	6			6	36
Totals	442	72	72	52	66	48	40	350

Project Task A: Socio-Economic Analysis (72 man-weeks)

Project Element	Staffing SP-2	AP-2	PA-1	PA-2	D-2	Totals
I.B. Extrapolation of Census Data	3			4	3	10
I.C. Data on Economic Dominants	1	4	3		2	10
I.D. Development of Information System	2	4				6
IV.D. Social Impact Study	1	3	2		2	8
IV.E. "Special Needs" Studies	4			2	2	8
V.A. Population & Economic Analysis	3	3	1	2	3	12
V.G. Economic Projections	2			2	2	6
V.H. Population Projections		2		2	2	6
V.M. Extrapolation of Social Impact & "Special Needs" Studies	2	2			2	6
Totals	18	18	6	12	18	72

Staffing Requirements and Cost Data

	Weeks		$/Week		
Senior Planner-2	18	@	$300	=	$5,400
Assistant Planner-2	18	@	$235	=	4,230
Planning Aide-1	6	@	$190	=	1,140
Planning Aide-2	12	@	$190	=	2,280
Draftsman-2	18	@	$165	=	2,970
					$16,020

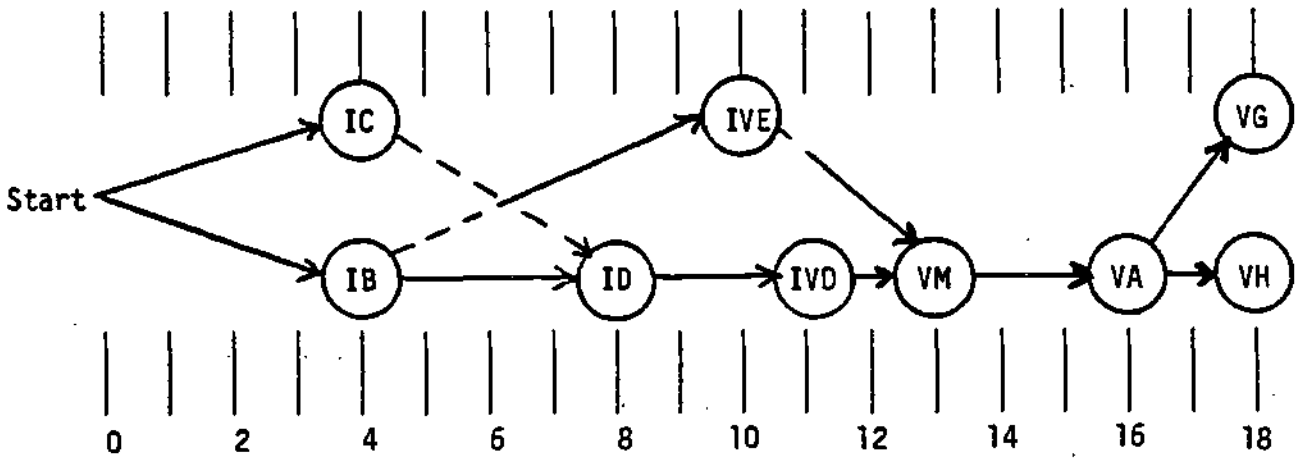

Project Task 8: Land Use Analysis (72 man-weeks)

Project Element	Staffing SP-1	AP-1	PA-1	O-1	D-2	Totals
I.A. Base Mapping		2		6		8
IV.A. Existing Land Use	4	4	4	4	4	20
IV.B. Vacant Land Survey	2	2		4		8
V.B. Land Capabilities Study	4		2		2	8
V.C. Physical Characteristics		3		3		6
V.D. Transportation & Circulation	2	4		2		8
V.I. Land Use Projections	2	3		5		10
V.L. Environmental Impact Statement	4					4
Totals	18	18	6	24	6	72

Staffing Requirements and Cost Data

	Weeks		$/Week		
Senior Planner-1	18	@	$300	=	$5,400
Assistant Planner-1	18	@	$235	=	4,230
Planning Aide-1	6	@	$190	=	1,140
Draftsman-1	24	@	$165	=	3,960
Draftsman-2	6	@	$165	=	990
					$15,720

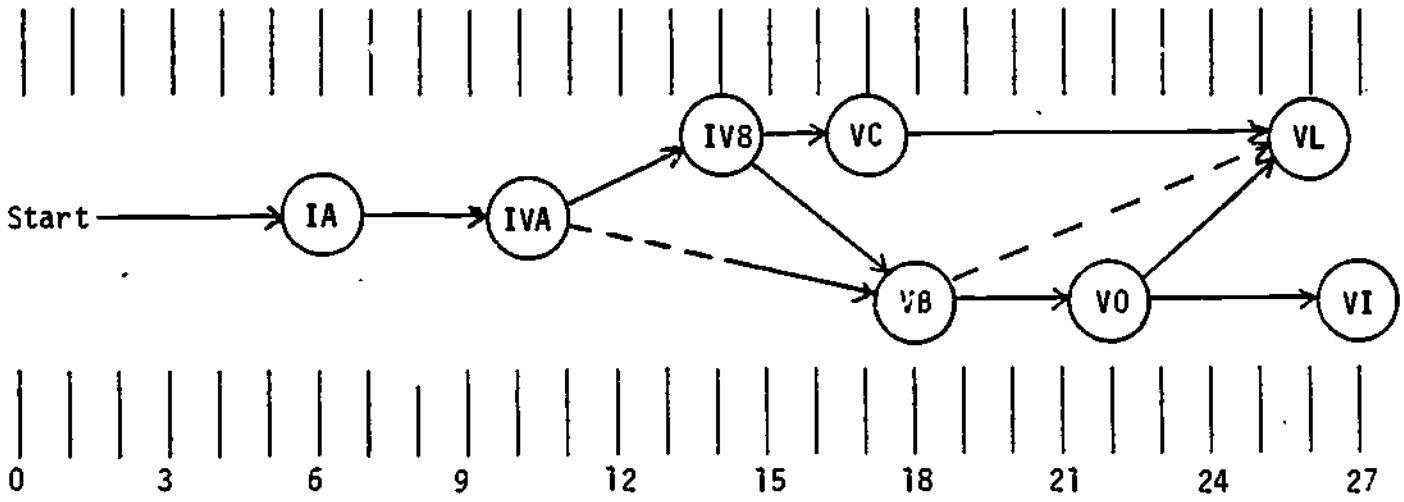

Project C: Community Oevelopment & Service Oelivery (52 man-weeks)

Project Element	SP-1	AP-1	PA-1	PA-2	D-1	O-2	Totals
IV.C. Housing Survey	4		4	2	2		12
IV.F. Regional Oevelopment Trends		2		4			6
V.E. Neighborhood Analysis	2	4	4			2	12
V.F. Community Facilities Analysis	2	2		2	4		12
V.J. Projection of Community Facilities	2	3				3	8
V.K. Projection of Community Renewal Needs	2	1				1	4
Totals	12	12	8	8	6	6	52

Staffing Requirements and Cost Oata

	Weeks		$/Week		
Senior Planner-1	12	@	$300	=	$3,600
Assistant Planner-1	12	@	$235	=	2,820
Planning Aide-1	8	@	$190	=	1,520
Planning Aide-2	8	@	$190	=	1,520
Oraftsman-1	6	@	$165	=	990
Oraftsman 2	6	@	$165	=	990
					$11,440

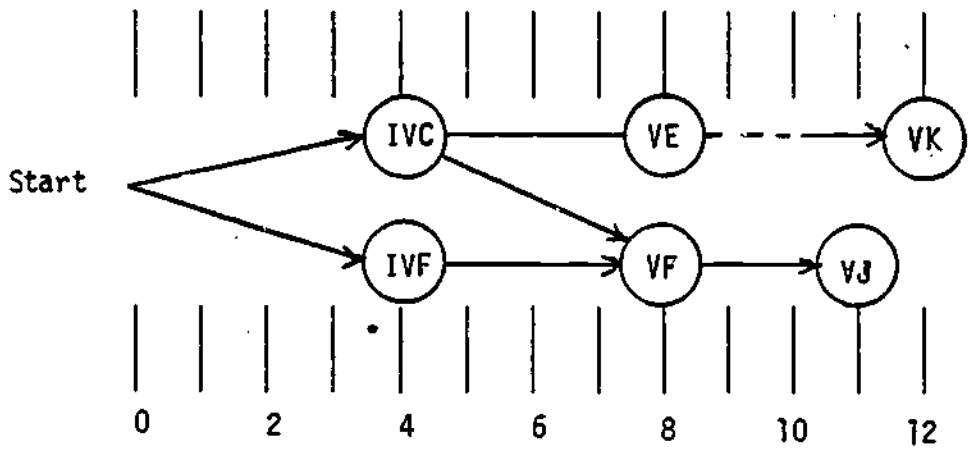

Project Task D: Inventory and Analysis of Policies (66 man-weeks)

Project Element	Staffing AD	PP	SP-1	SP-2	AP-1	AP-2	PA-2	Totals
II.A. Analysis of Development Policies		8	4				4	16
II.B. Classification of Policies by Content	4	8	4	4	4	4		28
II.C. Status & Effectiveness of Policies		6			6			12
II.D. Analysis of Policy Conflict		6	2				2	10
Totals	4	28	10	4	10	4	6	66

Staffing Requirements and Cost Data

	Weeks		$/Week		
Assistant Director	4	@	$425	=	$1,700
Principal Planner	28	@	$350	=	9,800
Senior Planner-1	10	@	$300	=	3,000
Senior Planner-2	4	@	$300	=	1,200
Assistant Planner-1	10	@	$235	=	2,350
Assistant Planner-2	4	@	$235	=	940
Planning Aide-2	6	@	$190	=	1,140
					$20,130

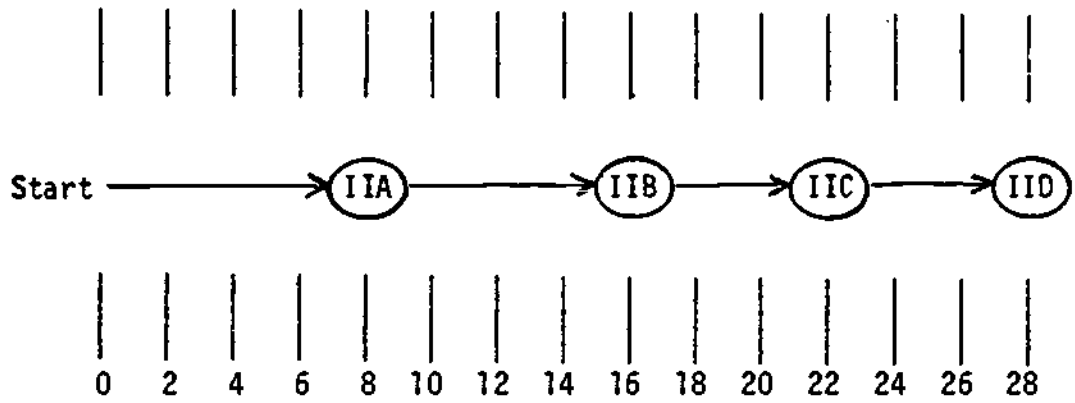

Project Task E: Identification of Goals and Objectives (48 man-weeks)

Project Element	Staffing AD	SP-1	AP-1	PA-1	Totals
III.A. Community Attitudes	8		6	6	20
III.B. Neighborhood Meetings	12				12
III.C. Citizen Planning Advisory Committees	10	6			16
Totals	30	6	6	6	48

Staffing Requirements and Cost Data

	Weeks		$/Week		
Assistant Director	30	@	$425	=	$12,750
Senior Planner-1	6	@	$300	=	1,800
Assistant Planner-1	6	@	$235	=	1,410
Planning Aide-1	6	@	$190	=	1,140
					$17,100

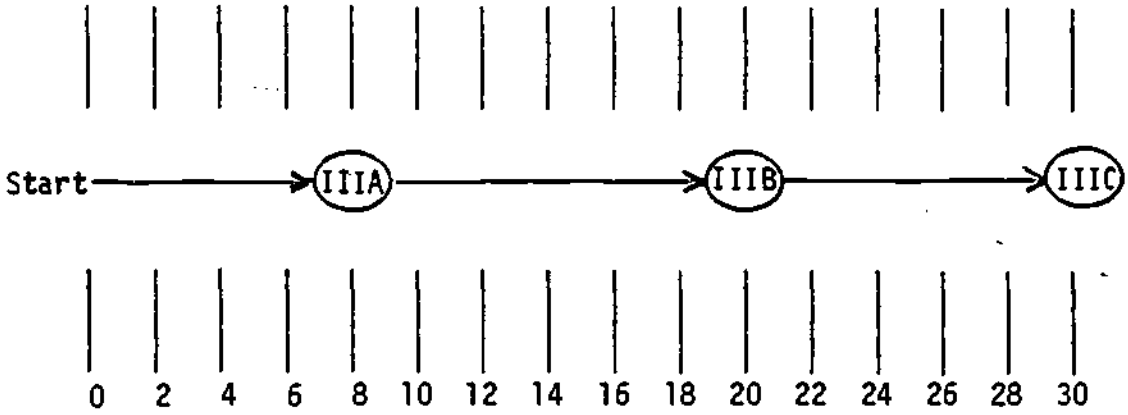

Project Task F: Plan Formulation and Implementation (40 man-weeks)

Project Element	Staffing								
	AD	PP	SP-1	SP-2	AP-1	AP-2	D-1	D-2	Totals
VI.A. Development of Plan Alternatives	2	2	2		2			2	10
VI.B. Evaluation of Plan Alternatives	2	2		2	2	2		2	12
VI.C. Preparation of General Plan			2				4		6
VI.D. Formulation of CIP			2			2		2	6
VI.E. Zoning Ordinance & Subdivision Regulations				2	2		2		6
Totals	4	4	6	4	6	4	6	6	40

Staffing Requirements and Cost Data

	Week		$/Week		
Assistant Direct.	4	@	$425	=	$1,700
Principal Planner	4	@	$350	=	1,400
Senior Planner-1	6	@	$300	=	1,800
Senior Planner-2	4	@	$300	=	1,200
Assistant Planner-1	6	@	$235	=	1,410
Assistant Planner-2	4	@	$235	=	940
Draftsman-1	6	@	$165	=	990
Draftsman-2	6	@	$165	=	990
					$10,430

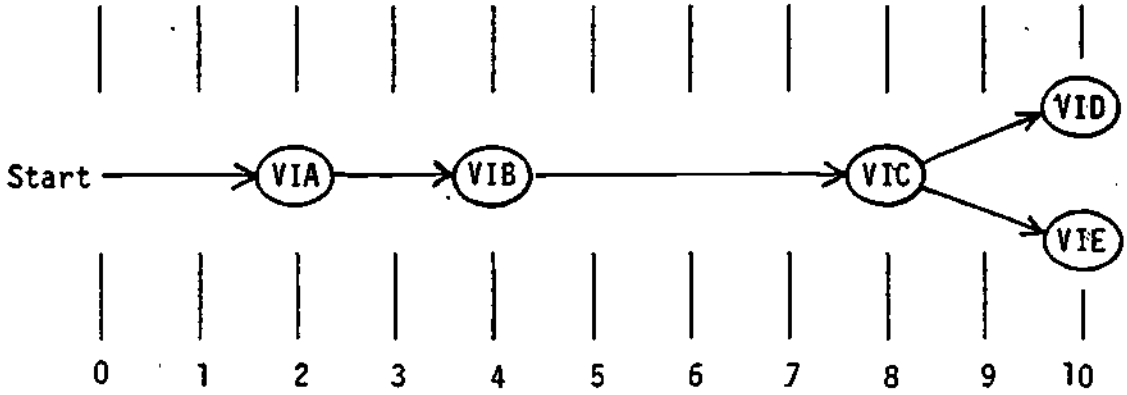

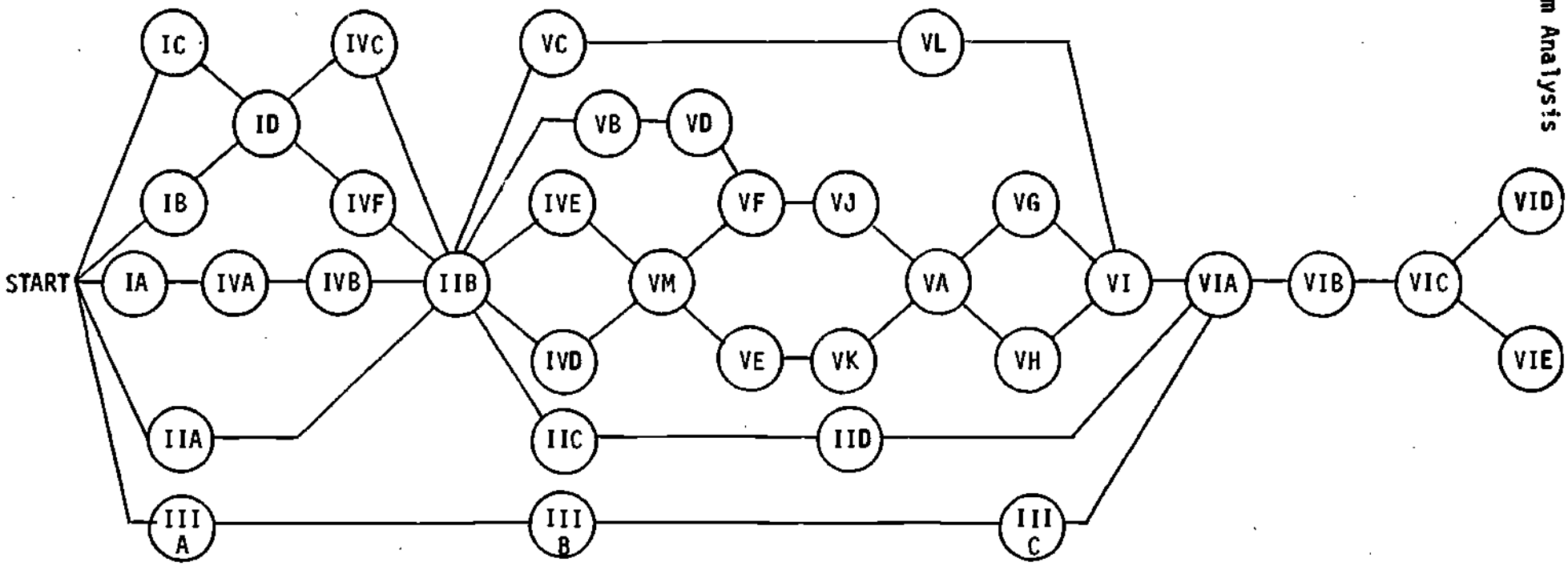

Figure 4-10. Arrow Network for Rurbania's Comprehensive Development Plan

INSTRUCTIONAL GUIDE #2 : PROJECT DURATION CONSTRAINT

When time durations of the individual project elements (determined by the maximum number of weeks required by any given staff member assigned to an element) are added to the arrow network and the Critical Path determined (Figure 4-11), it may be seen that the project duration under the staffing configuration suggested by Manny Colemike is 57 calendar weeks, or five weeks longer than the imposed project duration constraint. The project elements that form the Critical Path are as follows (the man-week figures in parentheses identify the staff constraint that determines the duration for each element and consequently, the total project duration):

I.A. Base Mapping (Draftsman-1: 6 man-weeks)
IV.A. Existing Land Use Study (4 man-weeks)
IV.B. Vacant Land Use Study (Draftsman-1: 4 man-weeks)
II.B. Classification of Policies by Content (Principal Planner: 8 man-weeks)
V.B. Land Capabilities Study (Senior Planner-1: 4 man-weeks)
V.D. Transportation & Circulation Study (Assistant Planner-1: 4 man-weeks)
V.F. Community Facilities Analysis (Draftsman-1: 4 man-weeks)
V.J. Projection of Community Facilities (Assistant Planner-1 and Draftsman-2: 3 man-weeks)
V.A. Population and Economic Analysis (3 man-weeks)
V.G. Economic Projections (2 man-weeks)
V.H. Population Projections (2 man-weeks)
V.I. Land Use Projections (Draftsman-1: 5 man-weeks)
VI.A. Development of Plan Alternatives (2 man-weeks)
VI.B. Evaluation of Plan Alternatives (2 man-weeks)
VI.C. Preparation of General Plan (Draftsman-1: 4 man-weeks)
VI.D. Formulation of CIP (2 man-weeks)
VI.E. Zoning Ordinance & Subdivision Regulations (2 man-weeks)

It may be seen that several elements are dependent on the inputs of the draftsmen. For example, the preparation time for the base maps (I.A.) might be shortened by two weeks by adding a second draftsman and reducing the amount of time of the Draftsman-1 from 6 to 4 weeks. This adjustment could be accomplished without affecting the Critical Path, but would shorten the project duration by two weeks. A similar adjustment in the land use projections (reducing the time of Draftsman-1 from 5 to 3 man-weeks and adding 2 man-weeks of time for Draftsman-2) would "save" another two weeks in the project duration. Finally, a one-week reduction in the calendar time of element V.F.: Community Facilities Analysis could be achieved by a similar reduction of time of Draftsman-1 and increase in time of Draftsman-2.

The consequence of these adjustments would be a reduction in the total project duration to 52 weeks without adding to the staff costs for the project. However, it would be necessary to increase the time available for Draftsman-2 from 39 to 41 weeks (while reducing the time requirements of Draftsman-1 from 36 to 31 weeks).

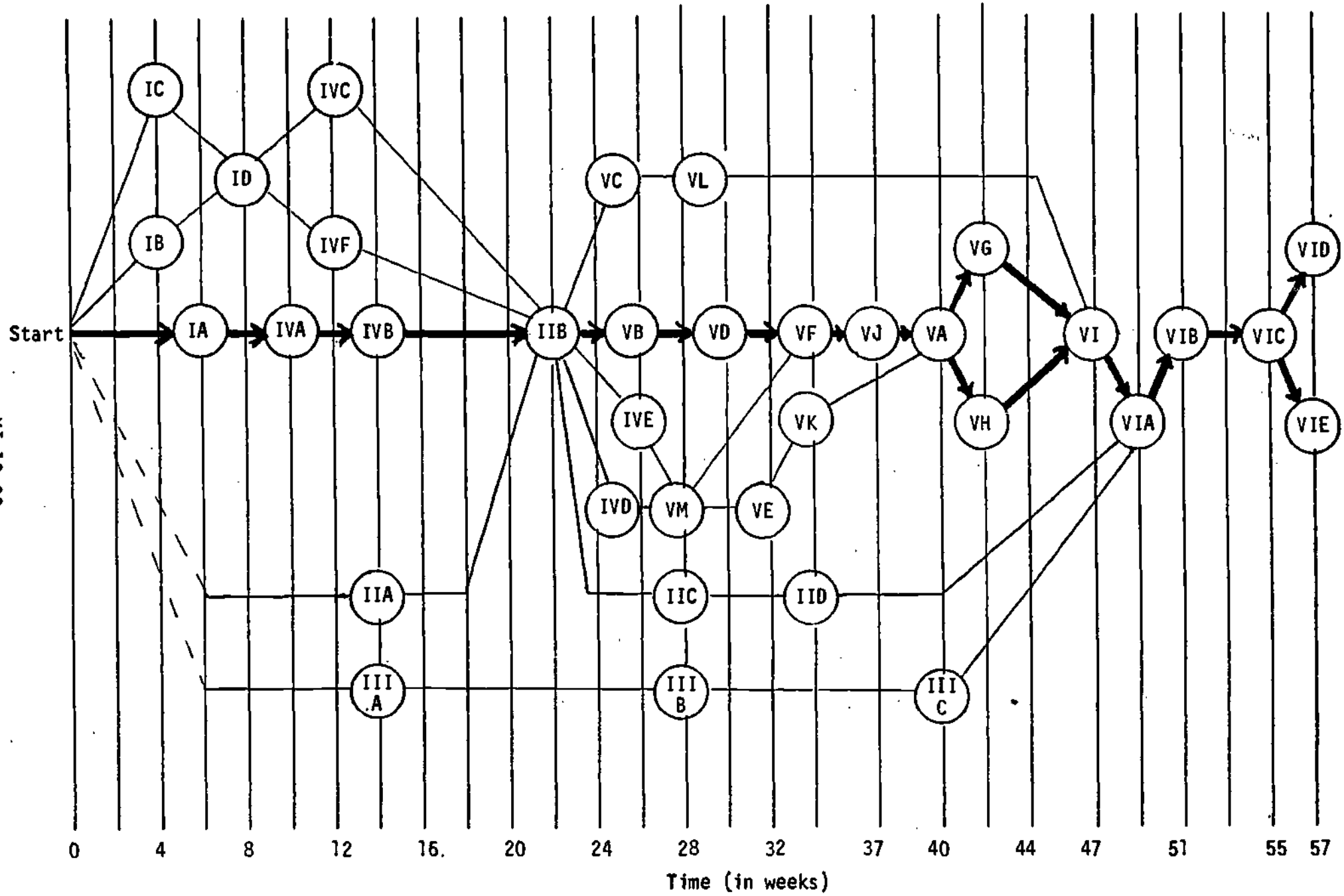

Figure 4-11. Critical Path and Project Duration for Comprehensive Plan Project.

Operations Planning & Control

Glossary of Terms

Network-based systems, particularly PERT and CPM, have been responsible for coining a number of specialized terms and expressions which are encountered frequently. The following is a brief glossary of the more significant terms, arranged in alphabetical sequence.

Activity	An element of a project represented on a network by an arrow. An activity cannot be started until the event preceding it has occurred. An activity may represent: a process; a task; a procurement cycle; or waiting time. In addition, an activity may simply represent a connection or interdependency between two events on the network.
Activity description	Definition of an activity which is identified by the predecessor and successor events
Activity slack	The difference in time between the earliest possible finish time and the latest possible finish time. The activity slack indicates the range of times within which an activity can be scheduled for completion.
Activity start date	The expected calendar start date of the activity, based upon the expected occurrence of the predecessor event.
Activity time	The estimate of the time required to complete an activity. Activity times are represented as: (a) most-likely time estimates (b) optimistic time estimates (c) pessimistic time estimates
Arrow diagram	The early CPM terms for a network.
Beta time	Expected (or estimated) time for an activity when three time estimates are used, calculated by the following formula:

$$t = \frac{a + 4b + c}{6}$$

where: a = optimistic time
b = most-likely time
c = pessimistic time

Burst point	Single events which have several activities succeeding them.
Condensed network	A network in which selected events taken from a detailed network are shown in relationship to one another. It accurately represents all of the characteristics of the detailed network with a reduced number of events. Lines connecting events on a condensed network may not be true activities, but are intended only to portray chronological interdependencies and restraints.
Constraint	A relationship of an event to a succeeding activity in which the activity may not start until the event preceding its has occurred.
Critical path	The sequence of activities and events which takes the greatest amount of time to complete and which has the least positive activity slack.
Dummy activity	This is a network activity (or operation) which represents a constraint, i.e., the dependency of a successor event or a predecessor event, but which does not have activity time, manpower, budget, or other resources associated with it. A dummy activity (or operation) is illustrated on the network by a broken line.
Earliest possible occurrence	The earliest time or date an event can be expected to occur. The EPO for an activity is equal to the sum of the expected times for the activities on the longest path from the beginning of the project to the given event or activity.
Event	A specific, definable accomplishment in a project plan, recognizable at a particular instant in time. Events do not consume time or resources, and are normally represented in the network by circles or rectangles.
Float	Total float is the spare time when all preceding activities occur at the latest possible times. Free floats is the spare time available when all preceding activities start at the earliest possible times and all succeeding activities occur at the earliest possible times.
Interdependency	The dependency of one event upon another, either within the same network or between two different networks.

Interface event	An event in a network which is also functional in one or more associated networks of the master network.
Latest Possible Occurrence	The latest time or date on which an event can occur without creating an expected delay in the completion of the project.
Merge point	An event which is a terminal point for several preceding activities.
Milestone	A key or major event in a project based on planned work accomplishments rather than a fixed time interval. Milestones are used to provide positive reporting points for effective management control.
Network	A flow plan of all the activities and events that must be accomplished to reach the project objectives, graphically depicting the planned sequence in which they are to be accomplished and their interdependencies and interrelationships.
Node	A CPM term for an event
Probability	A function of the standard deviation and the difference between the scheduled and expected dates, expressed as the likelihood of meeting a schedule date.
Slack	The difference between the time expected and the time allowed for an event or activity.
Successor event	The ending event for an activity.
Summary network	A summarization of detailed networks. Normally, only milestone and interface events are plotted on summary networks.
Work Package	The division of work resulting in a manageable task from the viewpoint of cost, time, and functional responsibility. The work package begins and ends with real events on the network.
Zero-cost activity	An activity that represents a relationship of precedence or dependence but which does not generate direct project costs. Similar to a dummy operation.

CHAPTER 5

IMPLEMENTATION IN THE CONTEXT OF ADMINISTRATIVE REFORMS

In the years to come, improvements in implementation and evaluation procedures will probably be linked to more general reforms in the budgetary and policy review processes of government. As a harbinger of these trends, Schick has observed: "First we have evaluation. Then, we have Zero-Base budgeting because of limitations in evaluation. And, we are thinking about Sunset because of limitations in Zero-Base budgeting."[1] Each of these emerging administrative reforms will impact other implementation mechanisms, both existing and proposed. Thus, Schick concludes: ". . . rather than Zero-Base budgeting, and Sunset, and evaluation being alternatives to one another, they have the potential, each for enriching the other. Zero-Base budgeting can create a market for evaluation and Sunset can create an opportunity for a legislative body to apply the knowledge acquired through Zero-Base budgeting."[2] In this final section, these emerging strategies will be discussed briefly and compared with the basic thrust of analytical improvements evidenced in the ten modules of this NTDS curriculum package. In particular, the role of implementation and practical evaluation will be recouched in reference to the general tasks of analytical improvement. In this manner, a capstone for the entire package will be fashioned.

ZERO-BASE BUDGETING: A RESPONSE TO INCREMENTALISM

Budgeting in modern government is a very complex task--the complexity of which increases as the concerns of society increase. The many demands on the public purse create numerous conflicts for the budgetmaker. Budgetary decisions often involve choosing between various programs, each of which is important to a group of people with a specific set of values. Such decisions are not easily made, since often there exists no common denominator on which to base such decisions. To reduce the complexity and conflict involved in budgetary decisions, budgetmakers often adopt what Wildavsky refers to as aids to calculations--"mechanisms however imperfect for helping men make decisions that are in some sense meaningful in a complicated world."[3]

Incrementalism: Strategy and Counterstrategy

Perhaps the most widely applied aid to budgeting is incrementalism. Under the incremental approach, past experience and past expenditure patterns serve as the basis for future budgets. A large portion of the budget is considered to be predetermined, so that attention is focused on only small increments of change. The portion of the budget assumed to

be inflexible is referred to as the base. This base is assumed to be fairly stable, as there are portions of the budget over which budget-makers have relatively little control. Some activities may be mandated by law and require fixed annual expenditures; other programs may be so accepted as satisfactory that no one questions their existence. Other expenditures, such as debt service on loans, may be on a specified pay-back schedule which permits the budget-maker little discretion. The tendency toward acceptance of the base is also influenced by the stability of revenue sources. Most increases in revenues occur incrementally, thus allowing only incremental adjustments in expenditure patterns.

Budgeting is generally a short-term concern, as budgets are proposed and reviewed on an annual basis. Rarely is an entire budget reviewed and justified on its own merit. Rather, only relatively small portions of the budget are the subject of dispute. Thus, incrementalism helps to reduce the amount of conflict surrounding the budget. Since the amount under discretion is limited, the conflict that does arise seldom is a policy question, pro or con, relative to a certain program. Rather, it is a fiscal question, i.e., determining how many dollars should be allocated to any particular program. Thorough evaluations are not possible, however, because of time and informational limitations. Therefore, decision-makers concentrate on programs that are near the budget cut-off line and thus reduce the complexity of the budgetary process.

If every agency proceeds to formulate its budget requests in this incremental fashion, the monetary amounts requested will likely well exceed the government's revenue-producing capabilities. It usually becomes necessary to make drastic cuts in agency requests in order to achieve a balanced budget. The responsibility of budget cutting rests with the top managers, executives, and the legislative body. Since these administrators and officials do not have specific and detailed knowledge of the functions under each program, they often lack the necessary expertise to make programmatic cuts efficiently. Often, across-the-board cuts are dictated as a counterstrategy to bring total requests in line with projected revenues and other financial/policy constraints.

If the decision to cut agency requests occurs year after year, agency heads may tend to overinflate their budget requests so that, when percentage cuts are made, the agency will be left with sufficient funds to carry out its planned programs. Those agencies submitting more reasonable requests often suffer due to across-the-board cuts. Eventually every agency will learn to pad its requests in order to successfully compete for scarce budget dollars. The result is a continual game between agencies and the budget-makers--one overinflating, the other cutting--in an effort to reach an equilibrium point of satisfaction to both parties.

Zero-Base: Marginal Analysis Techniques

Incrementalism in the budgeting process have been criticized as arbitrary and irrational. For years, budgetary literature has urged various reforms, pointing to the lack of coordination and neglect of important

values in traditional budget-building procedures. Neither performance budgeting nor program budgeting, however, deal directly with this shortcoming of traditional budgeting practices. It is this particular flaw that zero-base budgeting (ZBB) aims to correct. Zero-base budgeting in its present form is, as Graeme Taylor explains, ". . . simply the systematic application of marginal analysis techniques to budget formulation."[4] Marginal analysis, in turn, is the device by which alternatives are compared with regard to their relative costs and benefits.

Zero-base budgeting provides two ways of evaluating proposed activities. In addition to an evaluation of alternative ways of achieving an objective, ZBB provides specific mechanisms for the evaluation of varying levels of effort for each decision unit or program. Examining the consequences of various funding levels is important, especially when budget requests must be balanced within fixed fiscal resources. The ranking technique used in ZBB assures that high priority programs will be funded. Without a ranking process, budgeting is little more than a juggling act--trying to find the proper pieces that will add up to an acceptable whole. Unable to discern which programs are of lower priority and therefore, can be deferred or eliminated, budget-makers often are forced to make across-the-board cuts. ZBB eliminates (or at least minimizes) this need by creating a definitive priority listing.

As with program budgeting, departments and/or agencies (called decision units in ZBB) are called upon to generate several alternative paths to achieving their basic objectives. Moreover, they are called upon to supply information about the levels of effort (achievement) possible at various funding levels, some of which are below appropriations. Herein lies the crux of zero base budgeting, i.e., the penetration of budget analysis below the heretofore sacred current funding level (base).

Present forms of ZBB are distinguished by four characteristic procedures:

(1) Identification of Decision Units: those organizational components which normally serve as discrete or meaningful entities for budgetary purposes (e.g., departments of a local government).

(2) Analysis of Decision Units and Their Relationship to Decision Packages. Each decision unit is called upon to describe its goals and objectives and then to link these to a series of prioritized "decision packages" (levels of effort/service). Decision packages describe: (a) actions to be taken in pursuit of particular goals and objectives, (b) costs and benefits of these actions, (c) workload and other performance measures to assess the efficiency of activities, (d) alternative means of achieving objectives at a given level of funding, and (e) relative levels of accomplishment for variable levels of funding.

(3) Ranking of Decision Packages. Decision packages are ranked in order of decreasing priority (as measured by essential contributions or benefits) and a cut-off point is established through an evaluation of the total benefits derived from various levels of expenditure.

(4) Budget Preparation. Following the ranking of all decision packages, appropriate negotiations with the legislative body must be undertaken to assess the need for further strategic reductions or increases in budget requests.

Under ZBB procedures, program managers must establish a minimum level of effort below the current level of operation. Continuance of the operation or program would no longer be feasible for any level of appropriation below this minimum level. As Taylor points out:[5]

> The first package is probably the most difficult to define both conceptually and practically. This is the one that is usually referred to as the minimum level or perhaps the survival level for the decision unit--that level below which we might as well abolish the unit altogether. It is very hard to get people to force themselves into the mode of thinking in those terms.

In such cases, a percentage of the current level can be set as the minimum level. Seventy to eighty-five percent of the current appropriation frequently is employed. Additional levels of effort then should be identified as individual decision packages which may bring the operation up to and above its current level.

By identifying a minimum level of effort, plus additional increments as separate decision packages, the program manager presents the following alternatives to the decision-maker:

--Eliminate the operation if no decision packages are approved.

--Reduce the level of funding if only the minimum level decision package is approved.

--Maintain the same level of effort if the minimum level plus one or two incremental levels are approved (bringing the operation from the minimum level up to the current level).

--Increase the level of funding if one or more increments above the current level are approved.

An important characteristic of zero-base budgeting, according to Taylor, is that it gives decision-makers:

> . . . a range of choice--two kinds of choices. First, a choice as to how we do something, as to how we deliver service. Secondly, a choice as to the level of funding that we commit to a given program or activity. So not only do we question "Are we doing something in the most efficient way?" but also "how much should we be spending on this particular activity?"[6]

Variations of this basic theme have been introduced in several state and local governments. Levels of effort often are incorporated as a

requirement of contemporary applications of program budgeting. This "justification requirement" seeks to provide some of the same evaluative processes as the ranking techniques in ZBB. Levels of effort in program budgeting focus on the costs associated with: (1) a continuation of the present level of activities, (2) increases in workloads, and (3) the provision of new or changed levels of service. For each program (and subprogram in some cases), agencies are required to provide appropriate performance measures (workload measures) and measures of effectiveness to serve as a basis for the evaluation of program efforts. Unlike zero-base approaches, however, that incorporate a level of effort below current funding allocations, these justifications in program budgeting usually build upon present funding/service levels. When used with targets (i.e., prescribed upper levels of aggregate funding for specific program areas), these justifications can lead to the delineation of priorities among program elements (and objectives).

SUNSET AND PROGRAM TERMINATION

As Gerald Kopel points out, Sunset ". . . implies a fading out of bureaucracy."[7] In this regard, the crux of Sunset is the periodic review of programs and/or entire agencies and the legal provision for these entities to "self-distruct" in the absence of a favorable evaluation by the governing body. In application, the "termination" of a program, let alone an agency, is no simple matter. However, Sunset at least facilitates such in-depth evaluation through a regularly scheduled "period of reckoning."

Although an array of unique Sunset Laws have been passed by a number of states, such legislation shares the following general characteristics:

(1) State (and in some cases, local) agencies, departments, and programs heretofore granted indefinite tenure are assigned a mandatory termination date.

(2) If the governing body takes no action, the enterprise is concluded (the sun sets) on its termination date.

(3) The agency or department is given the opportunity to justify its continued existence prior to termination. This justification may entail any number of evaluative indices, including the results of a Performance Audit, and may be undertaken in conjunction with the processes of zero-base budgeting.

(4) The legislative body has the option to reinstate or "reconstruct" the agency or program or to terminate it.

(5) Reinstatement may leave the agency unchanged, whereas reconstruction may significantly modify the agency's mandate and responsibilities.

(6) If reauthorized reconstituted, the agency or program will again be subject to review (and possible termination at the end of the next cycle.

These periodic reviews are usually staggered so that only a particular set of agencies is reviewed each year. Common Cause recommends a seven to nine year cycle.[8]

Used in conjunction with zero-base budgeting, Sunset would thus facilitate a broader planning horizon and multi-year budgetary reviews. Sunset also might be applied to reduce the level of funding and perhaps to eliminate entirely certain "uncontrollables" or fixed (by law) expenditures (e.g., welfare programs) which generally are immune to ZBB or any other budget system for that matter.

PROBLEMS AND PERSPECTIVES

It is necessary to point out that, while ZBB and Sunset exhibit considerable promise, they have yet to realize even a measure of their full potential. This situation may well be the result of the tendency to look for patent solutions to the complex problems of public policy development. Furthermore, there has been a general failure, to date, to integrate ZBB and Sunset with broader strategies designed to enhance the overall capacity for planning, analysis, management, and control in the public sector.

The Limits of Budgetary Reforms

Case studies of the applications of ZBB procedures in the state of New Mexico, Georgia, Texas, New Jersey, and in various localities have revealed the following types of difficulties:

(1) In all but New Jersey, only a portion or percentage of the budget base was actually explored, thus some existing funding levels were assumed as givens. While this is more an adaptation than a problem, it suggests that the term "zero-base" is something of a misnomer.

(2) All experiments experienced varying degrees of trouble in implementing ZBB. Considerable time, effort, and expense have attended implementation at the state level, and in some cases, agency resistance has been formidable. Standardization of performance indices have been a problem in spite of fairly elaborate criteria.

(3) In nearly every case (New Jersey again being the exception), present funding levels were left intact. Few, if any, programs were terminated or even cut back.

(4) To date, ZBB has not produced a marked redistribution or reallocation of funding in state and local governments that have adopted these procedures.

(5) In some cases, the more detailed justifications accompanying an agency's priority rankings of decision packages resulted in a higher level of funding (and therefore, increased expenditures) than would have been identified under more conventional budgeting procedures.

Admittedly, these limited realizations do not substantially challenge the validity of ZBB; these largely are problems of application and/or adaptation. The additional information generated on budget priorities alone would argue for the continued development and usage of ZBB techniques. As Allen Schick has observed:

> ZBB by itself cannot override the much stronger incentives to seek larger budgets and expanded functions. What ZBB can do is much more realistic and modest, but nonetheless important. It can stimulate the redirection of resources within budgets and programs, encouraging agency officials to shift from less to more productive activities.[9]

The Sun Seldom Sets

In a similar vein, the potentials emerging from Sunset to date should be viewed as equally modest, for the sun has yet to set on many state or local enterprises. Sunset, as initially conceived (Colorado and Florida), was to be relatively selective in its application, focusing for the most part on state regulatory agencies. In instances where it has been expanded to include a broader set of activities (e.g., Alabama), the process have proven difficult and cumbersome. Bruce Adams provides the following assessment:

> Alabama did not build in an evaluation component the way Colorado did. The legislators had not data base from which to work. Alabama covered so many agencies--on one can do 200--that it was like the gladiators in Rome: people were asked to put "thumbs up" or "thumbs down" on one agency after another. Without a data base, the safest thing to do is to continue the agency, and that defeats the purpose of Sunset.[10]

While Sunset can be a much more pervasive policy tool that the experience to date has evidenced, it remains highly dependent upon previously constituted management decisions.

IMPLEMENTATION/EVALUATION AND THE MIXED REFORM APPROACH

In general, these emerging strategies may fail to bring about meaningful advances in the state-of-the-art of local policy-making because they tend to put all of their reform eggs in the budget/review basket. Throughout the ten modules which comprise this Policy/Program Analysis and Evaluation package, the argument has been made for a more multifaceted attack--one which combines ingredients of planning, policy development, management, and control. As Homan and his colleagues have observed, meaningful budgeting and evaluation cannot proceed at the local level without a comprehensive, public-centered, planning effort which identifies goals and objectives, establishes productivity criteria, and integrates long-range and capital facilities planning.[11]

"Fine-Tuning" for Systems Maintenance

Implementation, Evaluation, and Control, as the culminating elements of the planning/policy formulation process, attempt to guarantee that social objectives will be (or have been) met. In this regard, they are the final set of incremental improvements in a particular policy or program which began as little more than a perceived or expressed need. In the broader systematic perspective, these tools and strategies are the final set of "fine-tuning" adjustments which insure the maintenance of the system. In this context they are merely part of a mixed bag of tools and strategies designed to maintain the stability and integrity of a particular system.

No single strategy can cope with all of the various demands emerging from the many entry points. Moreover, no patent mix of strategies is suitable to all types of systems. For this reason, the discussion of elements in the NTDS package has contended throughout that local governments must select the optimal mix of strategies that fit their various needs. Such a mix will logically evolve about the rubric of a continuous planning process (i.e., Strategic, Management, and Operations Planning).

Innovative approaches such as ZBB and Sunset are likely to come and go--new and more exotic techniques will undoubtedly emerge. The analyst and administrator should be eclectic, borrowing from these techniques those ingredients which improve upon the operational integrity of the system. If "decision packages", for example, are an improvement over program elements because they maintain the departmental jurisdictions, then they might be adopted. Strategies need not be initiated whole cloth to produce meaningful administrative reforms.

Conclusions

In sum, this module maintains this thrust of limited or mixed reform. The perspectives developed upon operations planning and practical evaluation suggest that these endeavors can be undertaken without elaborate preparations. The Critical Path Method does not require computer capability. Moreover, "quick and dirty" practical program evaluations may constitute a distinct improvement over full-blown social research efforts in terms of a more complete interface with the demands of strategic renegotiation. The use of these techniques need not await elaborate adjustments in the budgetary and policy review processes, and yet for the immediately foreseeable future, they may do more to improve the integrity of public policy and programs than many of these more widely heralded reforms.

ENDNOTES

[1]Allen Schick, "Keynote Address: Putting It All Together," Sunset, Zero-Base Budgeting and Program Evaluation, Proceedings of a Conference on Legislative Oversight (Richmond, Virginia: Joint Legislative Audit and Review Commission, 1977), p. 9.

[2]Ibid., p. 18.

[3]Aaron Wildavsky, The Politics of the Budgetary Process (Boston: Little, Brown and Company, 1964), p. 11.

[4]Graeme M. Taylor, "Introduction to Zero-Base," The Bureaucrat, Vol. VI (Spring, 1977), p. 33.

[5]Graeme M. Taylor, "Introduction to Zero-Base Budgeting," Sunset, Zero-Budgeting and Program Evaluation, p. 50.

[6]Ibid., p. 43.

[7]Gerald Kopel, "Sunset in the West," State Government (Summer, 1976), p. 135.

[8]Bruce Adams, "Guidelines for Sunset," State Government (Summer, 1976), p. 139.

[9]Allen Schick, "Zero-Base Budgeting and Sunset," The Bureaucrat, Vol. VI (Spring, 1977), p. 19.

[10]Quoted in: Peter J. Ognibene, "Do We Need Sunset?", Parade Magazine (October 2, 1977), p. 9.

[11]Herbert Homan, et al., "Therapy for an Ad Hoc Budget," Governmental Finance (August, 1976), pp. 30-40.