DOCUMENT RESUME

ED 190 903 CE 026 588

TITLE Military Curricula for Vocational & Technical Education. Basic Electricity and Electronics. CANTRAC A-100-0010. Module 30: Intermediate Power Supplies. Study Booklet.

INSTITUTION Chief of Naval Education and Training Support, Pensacola, Fla.: Ohio State Univ., Columbus. National Center for Research in Vocational Education.

PUB DATE Jul 80

NOTE 245p.: For related documents see CE 026 560-593.

EDRS PRICE MF01/PC10 Plus Postage.

DESCRIPTORS *Electric Circuits: *Electricity: *Electronics: Individualized Instruction: Learning Activities: Learning Modules: Postsecondary Education: Programed Instruction: *Technical Education: Transistors

IDENTIFIERS Military Curriculum Project: *Power Supply Circuits: *Regulators (Electrical Equipment)

ABSTRACT

This individualized learning module on intermediate power supplies is one in a series of modules for a course in basic electricity and electronics. The course is one of a number of military-developed curriculum packages selected for adaptation to vocational instructional and curriculum development in a civilian setting. Four lessons are included in the module: (1) Voltage Multipliers: (2) Transistor, Voltage, and Current Regulators: (3) Silicon Controlled Rectifier Power Supply Circuits: and (4) Silicon Controlled Rectifier Regulatory Power Supplies. Each lesson follows a typical format including a lesson overview, a list of study resources, the lesson content, a programmed instruction section, and a lesson summary. (Progress checks and other supplementary material are provided for each lesson in a student's guide, CE 025 587.) (LRA)

CHIEF OF NAVAL EDUCATION AND TRAINING

CNTT-E-052

JULY 1980

# Military Curricula for Vocational & Technical Education

BASIC ELECTRICITY AND ELECTRONICS.

MODULE 30. INTERMEDIATE POWER SUPPLIES.

STUDY BOOKLET.



THE NATIONAL CENTER FOR RESEARCH IN VOCATIONAL EDUCATION
THE OHIO STATE UNIVERSITY

## MILITARY CURRICULUM MATERIALS

The military-developed curriculum materials in this course package were selected by the National Center for Research in Vocational Education Military Curriculum Project for dissemination to the six regional Curriculum Coordination Centers and other instructional materials agencies. The purpose of disseminating these courses was to make curriculum materials developed by the military more accessible to vocational educators in the civilian setting.

The course materials were acquired, evaluated by project staff and practitioners in the field, and prepared for dissemination. Materials which were specific to the military were deleted, copyrighted materials were either omitted or approval for their use was obtained. These course packages contain curriculum resource materials which can be adapted to support vocational instruction and curriculum development.

# Military Curriculum Materials Dissemination Is. . .

an activity to increase the accessibility of military-developed curriculum materials to vocational and technical educators.

This project, funded by the U.S. Office of Education, includes the identification and acquisition of curriculum materials in print form from the Coast Guard, Air Force, Army, Marine Corps and Navy.

Access to military curriculum materials is provided through a "Joint Memorandum of Understanding" between the U.S. Office of Education and the Department of Defense.

The acquired materials are reviewed by staff and subject matter specialists, and courses deemed applicable to vocational and technical education are selected for dissemination.

The Nati al Center for Research in Vocatio. Education is the U.S. Office of Education's designated representative to acquire the materials and conduct the project activities.

**Project Staff:**

Wesley E. Budke, Ph.D., Director
National Center Clearinghouse

Shirley A. Chase, Ph.D.
Project Director

# What Materials Are Available?

One hundred twenty courses on microfiche (thirteen in paper form) and descriptions of each have been provided to the vocational Curriculum Coordination Centers and other instructional materials agencies for dissemination.

Course materials include programmed instruction, curriculum outlines, instructor guides, student workbooks and technical manuals.

The 120 courses represent the following sixteen vocational subject areas:

| | |
|---|---|
| Agriculture | Food Service |
| Aviation | Health |
| Building & Construction Trades | Heating & Air Conditioning |
| Clerical Occupations | Machine Shop |
| Communications | Management & Supervision |
| Drafting | Meteorology & Navigation |
| Electronics | Photography |
| Engine Mechanics | Public Service |

The number of courses and the subject areas represented will expand as additional materials with application to vocational and technical education are identified and selected for dissemination.

# How Can These Materials Be Obtained?

Contact the Curriculum Coordination Center in your region for information on obtaining materials (e.g., availability and cost). They will respond to your request directly or refer you to an instructional materials agency closer to you.

CURRICULUM COORDINATION CENTERS

**EAST CENTRAL**
Rebecca S. Douglass
Director
100 North First Street
Springfield, IL 62777
217/782-0759

**NORTHWEST**
William Daniels
Director
Building 17
Airdustrial Park
Olympia, WA 98504
206/753-0879

**MIDWEST**
Robert Patton
Director
1515 West Sixth Ave.
Stillwater, OK 74704
405/377-2000

**SOUTHEAST**
James F. Shill, Ph.D.
Director
Mississippi State University
Drawer DX
Mississippi State, MS 39762
601/325-2510

**NORTHEAST**
Joseph F. Kelly, Ph.D.
Director
225 West State Street
Trenton, NJ 08625
609/292-6562

**WESTERN**
Lawrence F. H. Zane, Ph.D.
Director
1776 University Ave.
Honolulu, HI 96822
808/948-7834

# The National Center Mission Statement

The National Center for Research in Vocational Education's mission is to increase the ability of diverse agencies, institutions, and organizations to solve educational problems relating to individual career planning, preparation, and progression. The National Center fulfills its mission by:

- Generating knowledge through research
- Developing educational programs and products
- Evaluating individual program needs and outcomes
- Installing educational programs and products
- Operating information systems and services
- Conducting leadership development and training programs

FOR FURTHER INFORMATION ABOUT
Military Curriculum Materials
WRITE OR CALL

Program Information Office
The National Center for Research in Vocational Education
The Ohio State University
1960 Kenny Road, Columbus, Ohio 43210
Telephone: 614/486-3655 or Toll Free 800/848-4815 within the continental U.S. (except Ohio)



THE NATIONAL CENTER FOR RESEARCH IN VOCATIONAL EDUCATION
The Ohio State University 1960 Kenny Road Columbus, Ohio 43210
Tel. (614) 486-3655 Cable: CTVOCEDOSU/Columbus, Ohio

# Military Curriculum Materials for Vocational and Technical Education

Information and Field Services Division

The National Center for Research in Vocational Education

CNTT-E-052

prepared for

# BASIC ELECTRICITY and ELECTRONICS CANTRAC A-100-0010

•

# module 30 INTERMEDIATE POWER SUPPLIES

•

prepared by

NETPDCD
NAVAL EDUCATION & TRAINING
PROGRAM DEVELOPMENT CENTER
DETACHMENT Great Lakes

Study Booklet

July 1980

# OVERVIEW

## BASIC ELECTRICITY AND ELECTRONICS

## MODULE 30

## Intermediate Power Supplies

In this module you will learn about different types of solid state power supplies. You will learn how DC voltages are increased by means of voltage multipliers and how voltage and current regulators work. You will also learn how Silicon Controlled Rectifiers (SCR) are used to regulate power supplies and how to troubleshoot these devices.

This module has been divided into four lessons:

Lesson 1 Voltage Multipliers

Lesson 2 Transistor, Voltage and Current Regulators

Lesson 3 Silicon Controlled Rectifier Power Supply Circuits

Lesson 4 Silicon Controlled Rectifier Regulated Power Supplies

BASIC ELECTRICITY AND ELECTRONICS

MODULE THIRTY

LESSON 1

VOLTAGE MULTIPLIERS

JULY 1980

# OVERVIEW
# LESSON 1

## Voltage Multipliers

In this lesson you will learn about voltage multipliers and their application. You will learn how voltages are increased through the use of series aiding circuits and how to troubleshoot these circuits. You will also learn to identify schematics associated with different series aiding circuits and the function of the various components which make up the circuit.

The learning objectives of this lesson are as follows:

TERMINAL OBJECTIVE(S):

30.1.48 When the student complete this lesson, (s)he will be able to TROUBLESHOOT and IDENTIFY faulty components in solid state voltage multipliers when given a training device, prefaulted circuit board, necessary test equipment, schematic diagram and instructions. 100% accuracy is required.

ENABLING OBJECTIVE(S)

When the student completes this lesson (s)he will be able to:

30.1.48.1 IDENTIFY the purpose of voltage multipliers, by selecting the correct statement from a choice of four. 100% accuracy is required.

30.1.48.2 IDENTIFY the schematic diagrams of half and full-wave voltage doubler and tripler circuits by selecting the correct name or diagram from a choice of four. 100% accuracy is required.

30.1.48.3 IDENTIFY the functions of components and circuit operation of half and full-wave voltage doubler and tripler circuits by selecting the correct statement from a choice of four. 100% accuracy is required.

30.1.48.4 CALCULATE voltage values for a given voltage multiplier circuit by selecting the correct value for a given output or component from a choice of four. 100% accuracy is required.

30.1.48.5 MEASURE and COMPARE output voltages, waveforms and resistance in voltage multiplier circuits given a training device, circuit boards, test equipment and proper tools, schematic diagrams, and a job program containing references for comparison. Recorded data must be within limits stated in the job program.

# OVERVIEW

30.1.48.6 IDENTIFY the faulty component or circuit malfunction in a given voltage multiplier circuit, given a schematic diagram and failure symptoms, by selecting the correct fault from a choice of four. 100% accuracy is required.*

(* This objective is considered met upon successful completion of the terminal objective.)

BEFORE YOU START THIS LESSON, READ THE LESSON LEARNING OBJECTIVES AND PREVIEW THE LIST OF STUDY RESOURCES ON THE NEXT PAGE.

# LIST OF STUDY RESOURCES
## LESSON I

## Voltage Multipliers

To learn the materials in this lesson, you have the option of choosing, according to your experience and preferences, any or all of the following study resources:

Written Lesson presentation in:

Module Booklet:

- Summary
- Programmed Instruction
- Narrative

Student's Guide:

- Summary
- Progress Check
- Job Program Thirty-1 "Voltage Multipliers"
- Troubleshooting Power Supplies I.S.
- Fault Analysis (Paper Troubleshooting) I.S.
- Performance Test I.S.

Additional Material(s):

35 mm sound/slide "Thirty-1 Voltage Multipliers"

Enrichment Material(s)

NAVSHIPS 0967-000-120, "Electronic Circuits" Electronics Installation and Maintenance Book (EIMB) Naval Ship Engineering Center, Washington, D.C.: U.S. Government Printing Office 1965

YOU MAY USE ANY, OR ALL, RESOURCES LISTED ABOVE, INCLUDING THE LEARNING CENTER INSTRUCTOR: HOWEVER, ALL MATERIALS LISTED ARE NOT NECESSARILY REQUIRED TO ACHIEVE LESSON OBJECTIVES. THE PROGRESS CHECK MAY BE TAKEN AT ANY TIME.

SUMMARY
LESSON 1

## Voltage Multipliers

In previous lessons you learned how voltages are increased by the use of a transformer. You also learned that when voltages are increased there is a corresponding decrease in the current output.

This lesson describes another method for increasing voltages. The method is called voltage multiplication and the circuits which accomplish the multiplication are called voltage multipliers. Voltage multipliers are designated as doublers, triplers, or quadruplers depending on the ratio of the output voltage to the input voltage.

Voltage multipliers are used to develop high DC voltage where there is a low current requirement. The most common use of voltage multipliers is to provide DC voltage for the anode of a cathode-ray tube (CRT). Output of voltage multipliers range from one thousand to thirty thousand volts. The actual voltage depends on the equipment application and size of the CRT.

Although the input for a voltage multiplier could be direct from the line, or power source, this is not usually the case for military electronic equipment. Most military equipments use transformer inputs since the transformer isolates the equipment from the line and thereby reduces the shock hazard.

Voltage multipliers are made up of voltage rectifiers which you are already familiar with. The rectifiers may be either full-wave or half-wave, depending on the circuit requirements. You recall that full-wave rectifiers are used when better voltage regulation is needed and that full-wave rectification results in a reduction in the output ripple amplitude and an increase in the ripple frequency.

The schematic shown in Figure 1 is that of a half-wave voltage doubler. Close examination and study of the schematic will reveal that the doubler is in fact made up of two half-wave voltage rectifiers. C1 and CR1 make up one rectifier and C2 and CR2 the other.

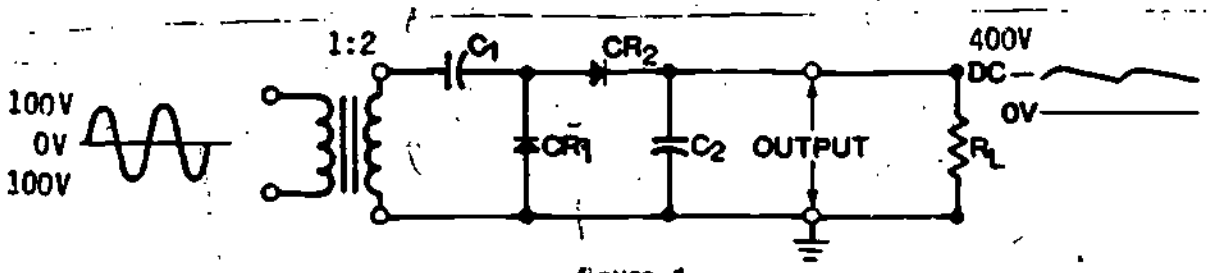


figure 1

HALF-WAVE VOLTAGE DOUBLER

When the top of the secondary winding of the transformer is negative, CR1 is forward biased, allowing C1 to charge to the peak value of the input voltage or 200 volts. When the top of the secondary winding of the transformer becomes positive, CR2 is forward biased and CR1 is reverse biased. At this time a series circuit exists consisting of C1, CR2, C2 and the secondary of the transformer. The secondary voltage of the transformer now series aids the voltage on C1 and results in a pulsating DC voltage of 400 volts as shown by the wave-form.

If you do not understand how a half-wave voltage doubler works after studying the schematic in Figure 1 and reading the explanation, you should consider an alternate mode of instruction. This lesson is also covered by narrative, programmed instruction, and tape/slide.

Figure 2 shows the schematic for a half-wave voltage tripler.

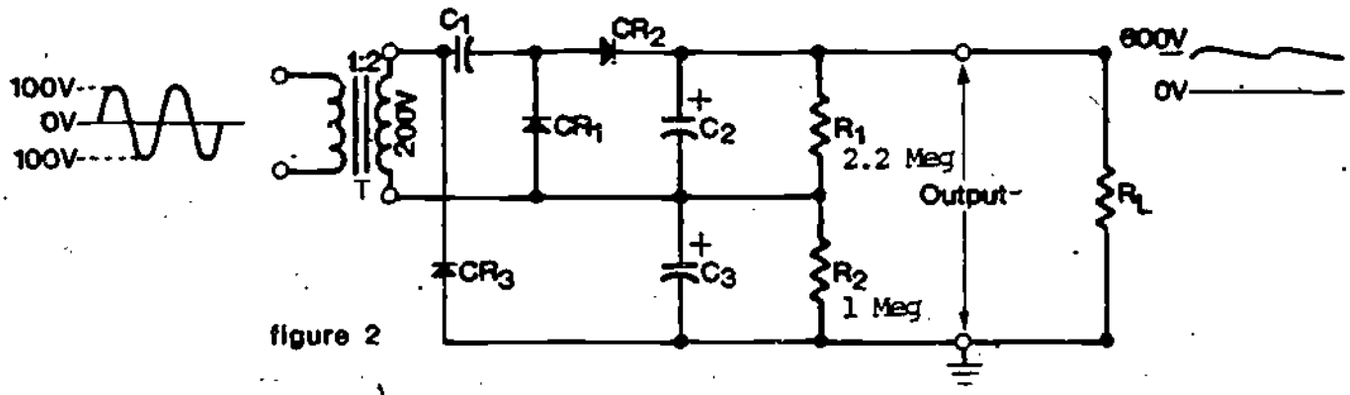


figure 2

HALF-WAVE VOLTAGE TRIPLER

The circuitry for the tripler is identical with that of the doubler except for the addition of C3, CR3, and R2. Considered separately, these components function as a half-wave rectifier. When the top of the secondary of the transformer is negative, CR3 is forward biased and functions as a closed switch. This allows both C1 and C3 to charge to a peak voltage of 200 volts. When the top of the transformer secondary is positive, C2 is charged to 400 volts as a result of the voltage doubling of the transformer secondary and C1. C2 and C3 now function as series aiding capacitors and discharge with a resultant voltage of 600 volts across the resistive load $R_L$. Note that the values of R1 and R2 are proportional to the voltages of C2 and C3, or in this case, a 2 to 1 ratio. Study the schematic to make sure you understand how the voltage tripler works.

The schematic shown in Figure 3 is that of a full-wave voltage doubler.

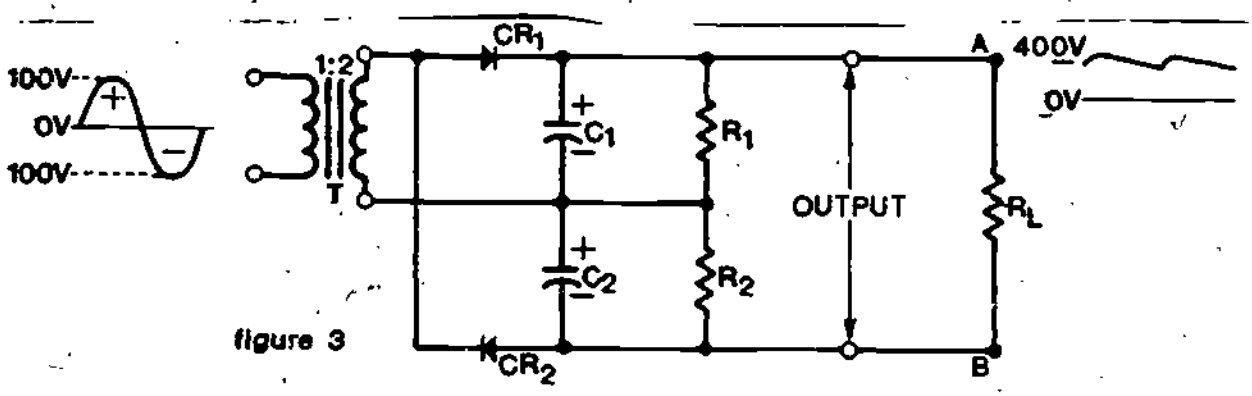


figure 3

FULL-WAVE VOLTAGE DOUBLER

When you examine the schematic you see that the circuit is in fact made up of two half-wave rectifiers. These rectifiers function as series aiding except in a slightly different way. During the alternation when the secondary of the transformer is positive at the top, capacitor C1 charges to 200 volts through CR1. Then, when the transformer secondary is negative at the top, C2 charges to 200 volts through CR2. R1 and R2 are equal value balancing resistors which stabilize the charges of the two capacitors. Resistive load $R_L$ is connected across C1 and C2 so that it receives the total charge of both capacitors. The output voltage is +400 volts when measured at the top of $R_L$ or point "A" with respect to point "B". If the output is measured at the bottom of $R_L$ it is -400 V. Either way the output is twice the peak value of the AC secondary voltage. As you can see the possibilities for voltage multiplication are almost limitless.

AT THIS POINT, YOU MAY TAKE THE LESSON PROGRESS CHECK. IF YOU ANSWER ALL SELF-TEST ITEMS CORRECTLY, PROCEED TO THE JOB PROGRAM. IF YOU INCORRECTLY ANSWER ONLY A FEW OF THE PROGRESS CHECK QUESTIONS, THE CORRECT ANSWER PAGE WILL REFER YOU TO THE APPROPRIATE PAGES, PARAGRAPHS, OR FRAMES SO THAT YOU CAN RESTUDY THE PARTS OF THIS LESSON YOU ARE HAVING DIFFICULTY WITH. IF YOU FEEL THAT YOU HAVE FAILED TO UNDERSTAND ALL, OR MOST, OF THE LESSON, SELECT AND USE ANOTHER WRITTEN MEDIUM OF INSTRUCTION, AUDIO/VISUAL MATERIALS (IF APPLICABLE), OR CONSULTATION WITH LEARNING CENTER INSTRUCTOR, UNTIL YOU CAN ANSWER ALL SELF-TEST ITEMS ON THE PROGRESS CHECK CORRECTLY.

PROGRAMMED INSTRUCTION
LESSON 1

Voltage Multipliers

TEST FRAMES ARE 4, 13, 17, AND 24. PROCEED TO TEST FRAME 4 FIRST AND SEE IF YOU CAN ANSWER THE QUESTION. FOLLOW DIRECTIONS GIVEN AFTER THE TEST FRAME.

1. You know AC voltage can be stepped up (increased) by use of a transformer and that the amount of increase depends on the ratio of the primary winding to the secondary winding. See Figure 1.

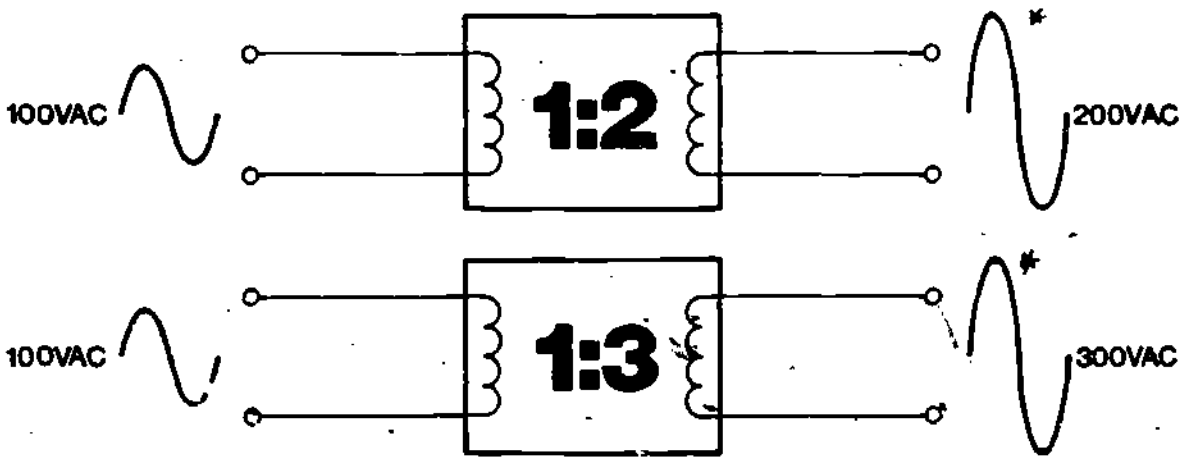


figure 1
STEPPING UP AC VOLTAGES

In most equipment applications AC is converted to DC by means of a power supply. See Figure 2.

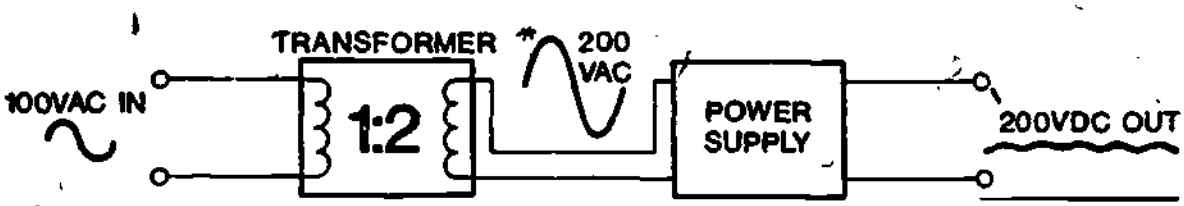


figure 2

AC TO DC

* Circuit will work with or without phase inversion.

As you know power supplies with transformer inputs use either half-wave or full-wave voltage rectification to provide the DC output. The type of rectifier that is used depends on the equipment design and application.

This lesson describes another method of increasing voltages. The method is called voltage multiplication and the circuits which accomplish this multiplication are called voltage multipliers. See Figure 3.

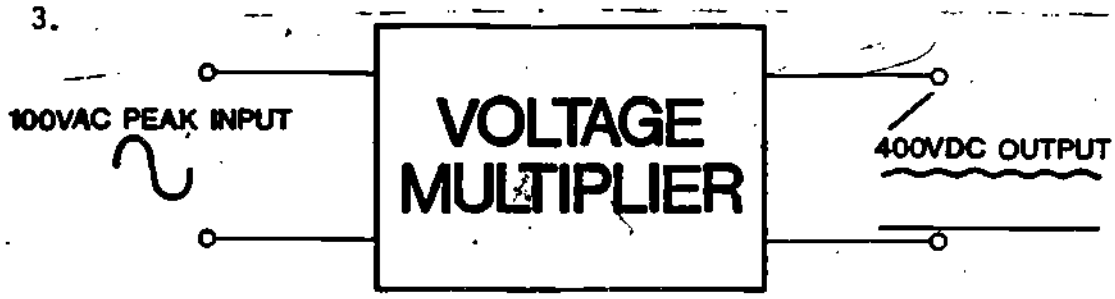


figure 3

VOLTAGE MULTIPLIER

A voltage multiplier performs the same function as a:

a. step-down transformer power supply.

b. step-up transformer power supply.

c. full-wave rectifier power supply.

d. voltage regulator power supply.

---

b. step-up transformer power supply

2. Voltage multipliers are classified as voltage doublers, triplers or quadruplers depending on the relationship of the output voltage to the input voltage. See Figure 4.

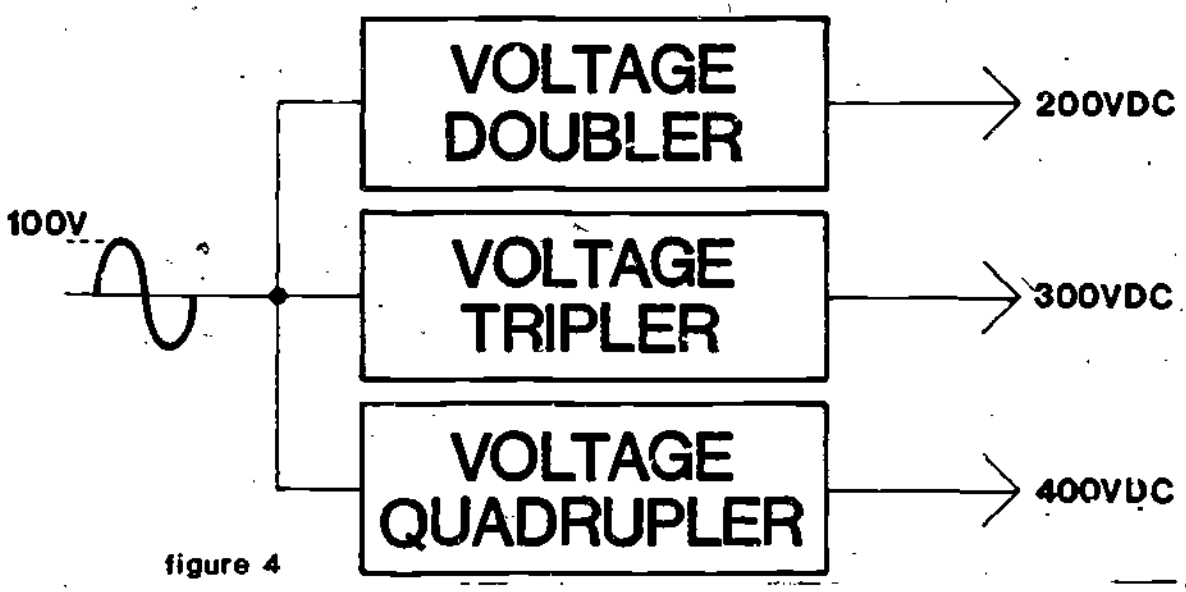


figure 4

TYPES OF VOLTAGE MULTIPLIERS

The classification of a voltage multiplier depends on the:

a. relationship of the output voltage to the input voltage.

b. output voltage of the voltage multiplier.

c. input voltage of the voltage multiplier.

d. voltage requirements of the circuit.

---

a. relationship of the output voltage to the input voltage

3. Voltage multipliers are used primarily to develop high voltages where there is a low current requirement. The most common application of the high voltage output of a voltage multiplier is the anode of a cathode-ray tube (CRT). See Figure 5. Voltage multipliers supply

anode voltages for radar scope presentations, oscilloscope presentations, and TV picture tubes. The required voltages range from one thousand to thirty thousand volts. The actual voltage requirement depends on the size of the CRT and its application.

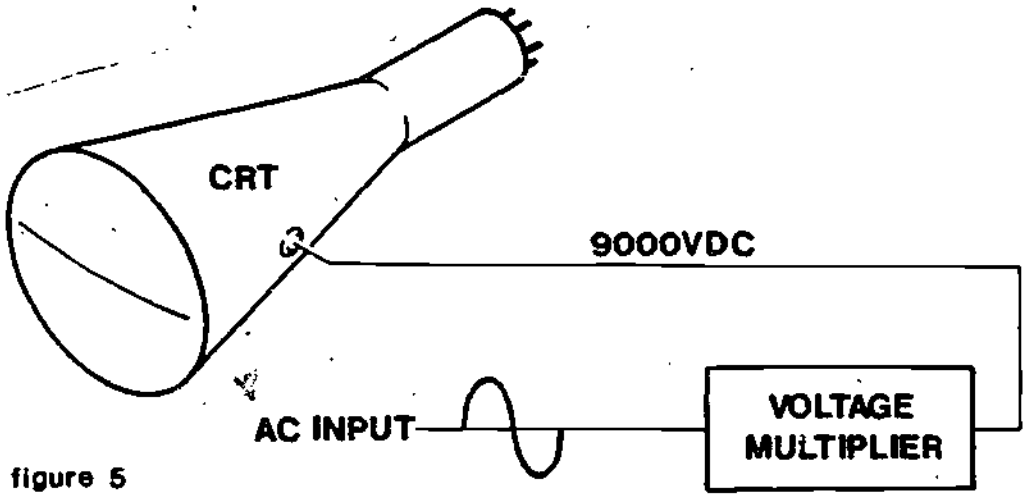


figure 5

TYPICAL APPLICATION OF A VOLTAGE MULTIPLIER

The purpose of a voltage multiplier is to convert values of AC voltage into higher values of DC. As voltages are increased in voltage multiplier circuits there is a corresponding decrease in current output. You recall that this is also true when transformers are used to increase voltages.

When voltage multipliers are used to increase voltages there is _____ _____ in current output.

a. an increase

b. no change

c. a decrease

---

c. a decrease

4. TEST FRAME

(THIS IS A TEST FRAME. COMPARE YOUR ANSWER WITH THE CORRECT ANSWER GIVEN AT THE TOP OF THE NEXT PAGE)

The function of a voltage multiplier is to produce a/an:

a. DC output voltage that is a multiple of the peak AC input voltage.

b. multiple of the AC input voltage.

c. AC voltage greater than 5000 VAC.

d. low DC voltage which is then converted to high voltage.

---

# a loose connection can:

1. cause fires
2. be a direct cause of personnel injury
3. add many hours of unnecessary work
4. lead to overheating of cables
5. interrupt operation of vital loads

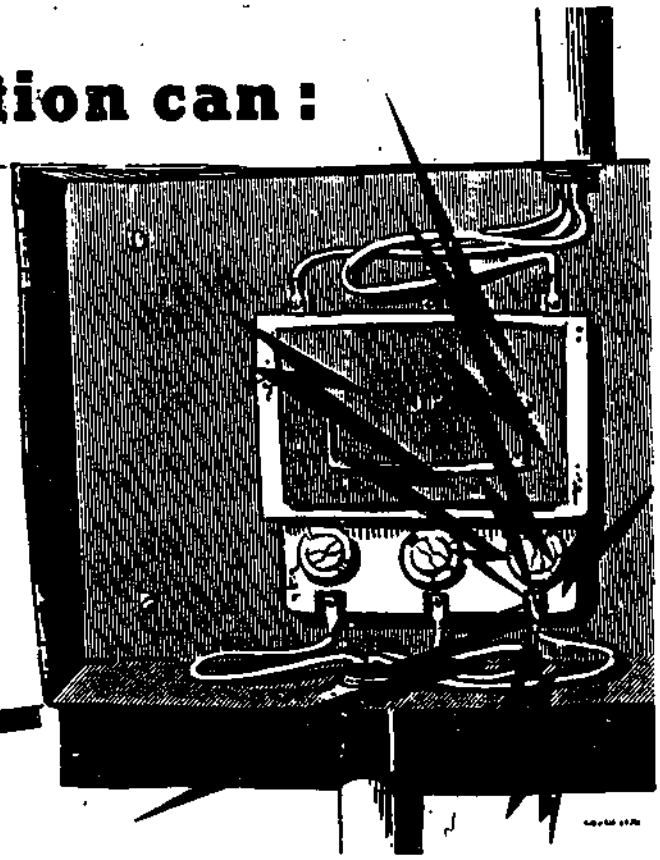

a. DC output voltage that is a multiple of the peak AC input voltage

IF YOUR ANSWER MATCHES THE CORRECT ANSWER, YOU MAY GO TO TEST FRAME 13 OTHERWISE GO BACK TO FRAME 1 AND TAKE THE PROGRAMMED SEQUENCE BEFORE TAKING TEST FRAME 4 AGAIN.

5. The AC input voltage for a voltage multiplier may be supplied directly from the power source or line, or from a transformer. While the input could be direct from the line this creates a potentially hazardous condition. Use of a transformer isolates the equipment from the line and reduces the hazard. Most military equipments use transformers as power sources for voltage multipliers.

The primary advantage of using a transformer as a power source for a voltage multiplier is it:

a. results in an increase in power output

b. supplies a more reliable source of input voltage

c. isolates the equipment from the line and reduces potential electrical hazards

---

c. it isolates the equipment from the line and reduces potential electrical hazards

6. The multiplier schematic shown in Figure 6 is that of a half-wave voltage doubler. It is called a doubler because the multiplier's output voltage is twice that of the transformer peak secondary voltage. Since the output capacitor is charged only once during each input cycle the multiplier is called a half-wave voltage doubler.

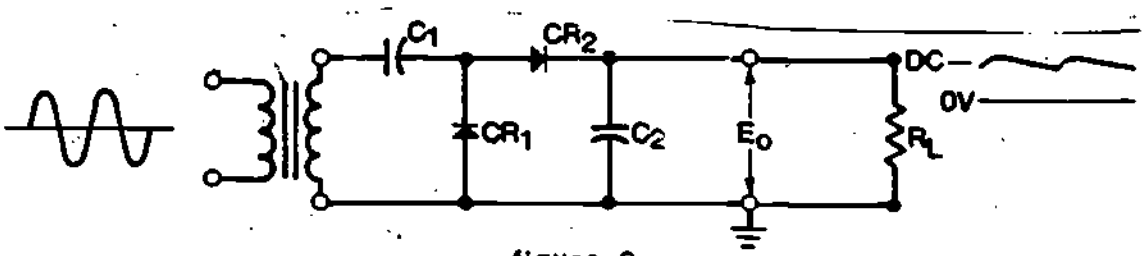


figure 6

HALF WAVE VOLTAGE DOUBLER

A voltage multiplier which uses half wave rectification to increase output voltage to twice the peak input voltage is called a_____ voltage doubler

---

half-wave

7. The half-wave voltage doubler shown in Figure 7 is made up of two half-wave voltage rectifiers. C1 and CR1 make up one half-wave rectifier and C2 and CR2 make up the other rectifier. To help you understand the schematic, one of the half-wave rectifiers is shown with solid lines and the other with broken lines.

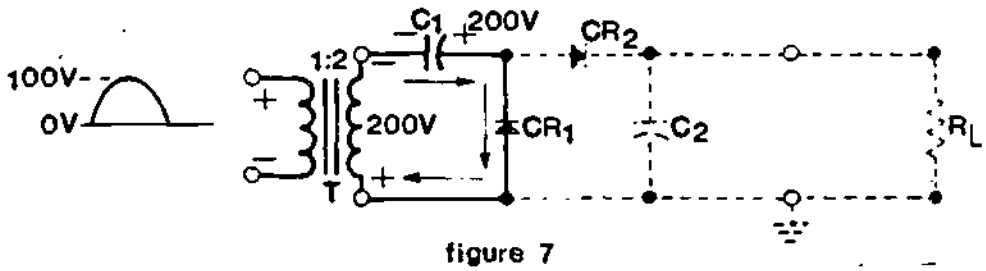


figure 7
HALF-WAVE VOLTAGE DOUBLER

A half-wave voltage doubler is made up of _____ half-wave voltage rectifiers.

---

two

---

8. Look at the schematic shown in Figure 7. Notice that the top of the secondary is negative (-) and the bottom is positive (+). During this time CR1 is forward biased and functions as a closed switch allowing C1 to charge to the peak value of the input voltage or 200 volts.

When the top of the transformer secondary is negative, CR1 functions as a/an _____ switch and allows C1 to charge to _____ volts.

a. open, 200

b. closed, 200

---

b. closed, 200

9. When the polarity across the secondary of the transformer is reversed as shown in Figure 8, the top of the secondary is positive.

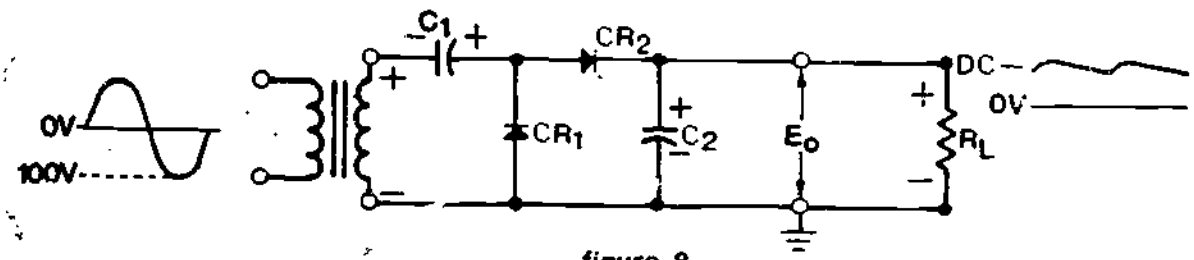


figure 8

HALF-WAVE VOLTAGE DOUBLER

Because the top of the secondary winding is now positive, CR2 is forward biased and CR1 is reverse biased.

When the top of the secondary winding of the transformer is positive, CR2 is _____ biased and CR1 is _____ biased.

a. forward, reverse

b. reverse, forward

---

a. forward, reverse

(10.) With CR2 forward biased and CR1 reverse biased, a series circuit exists consisting of C1, CR2, C2, and the secondary of the transformer. Current now flows as shown by the arrows in Figure 9.

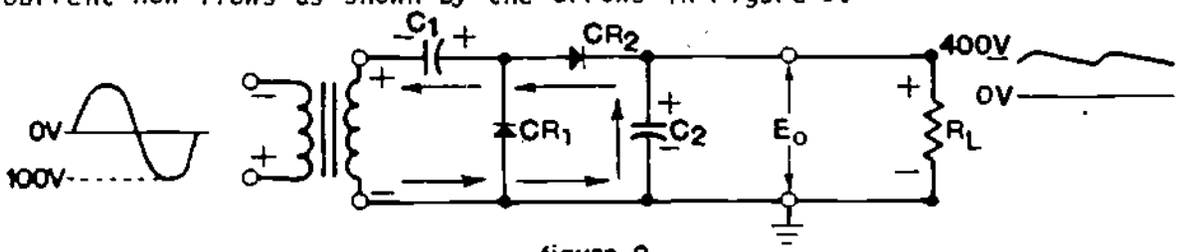


figure 9
CHARGING C2

The secondary of the transformer is now series aiding the charge on C1 and results in a 400 volt pulsating DC output as shown by the output waveform. When the top of the transformer secondary is positive, the secondary of the transformer _____ _____ C1 and results in a _____ volt pulsating DC output.

---

series aids, 400

(11.) The effect of series aiding is comparable to connecting two 200 volt batteries in series as shown in Figure 10.

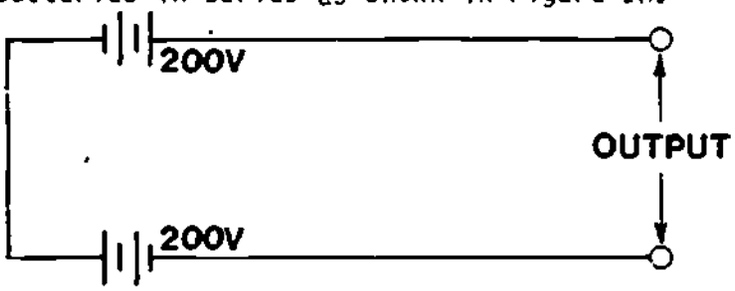


figure 10
SERIES AIDING VOLTAGE SOURCES

The series aiding output voltage of Figure 10 is _____ volts.

---

400

12. Figure 11 is a modified schematic for the half-wave voltage doubler explained in this lesson. The difference is that batteries have been substituted for the transformer secondary and capacitor C1. These batteries are shown as equivalents in Figure 11.

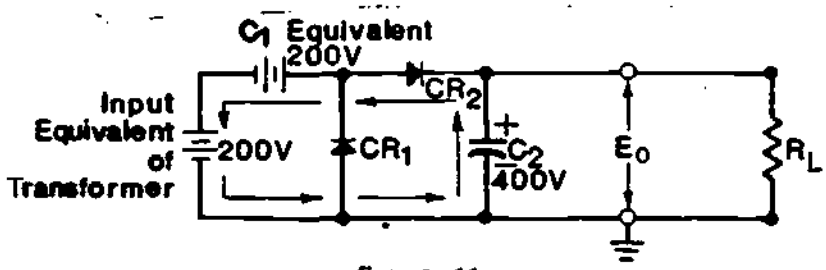


figure 11

SERIES AIDING SOURCES CHARGING C2

The series aiding shown in Figure 11 results in capacitor C2 charging to the sum of the voltages across C1 and the transformer secondary. This results in an output voltage across $R_L$ of 400 volts.

As a result of C1 and the transformer secondary series aiding, C2 charges to _____ volts.

---

400

13. THIS IS A TEST FRAME. COMPLETE THE TEST QUESTIONS AND THEN COMPARE YOUR ANSWERS WITH THE CORRECT ANSWERS GIVEN ON PAGE 27.

1. The purpose of a voltage multiplier is to convert peak values of AC into _____ values of DC.

2. When voltages are increased through the use of voltage multipliers there is a _____ in current output.

3. Transformers are used as power sources for voltage multipliers because the transformer _____ the equipment from the line, thereby reducing the electrical hazard.

4. A voltage multiplier, which uses half wave rectification to increase the output voltage to twice the input voltage, is called a _____.

5. A half-wave voltage doubler is made up of _____ voltage rectifiers.

Answers to the following questions depend on your understanding of the schematic shown below and knowledge of how each component functions.

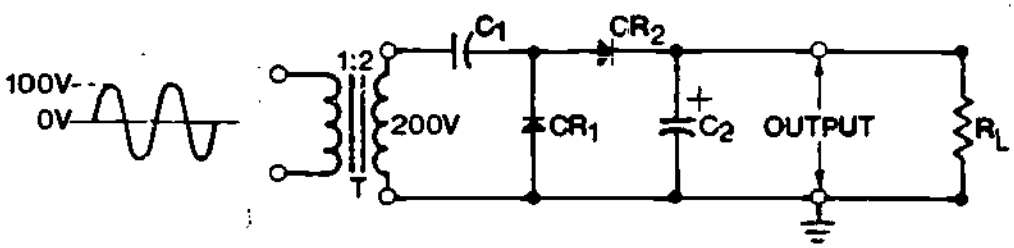


6. When the top of the transformer secondary is negative, diode CR1 functions as a/an _____ switch and allows capacitor C1 to charge to _____ volts.

   a. open, 200

   b. closed, 200

7. When the top of the transformer secondary is positive, diode CR2 functions as a/an _____ switch.

   a. open

   b. closed

8. When the top of the secondary winding of the transformer is positive, CR2 is _____ biased and CR1 is _____ biased.

   a. forward, reverse

   b. reverse, forward

9. During the negative input alternation, the secondary of the transformer _____ _____ C1 and results in a _____ volt DC output.

COMPARE YOUR ANSWERS TO THE CORRECT ANSWERS GIVEN ON THE NEXT PAGE.

(15.) Now lets examine Figure 13 to determine how the addition of the half-wave rectifier results in voltage tripling.

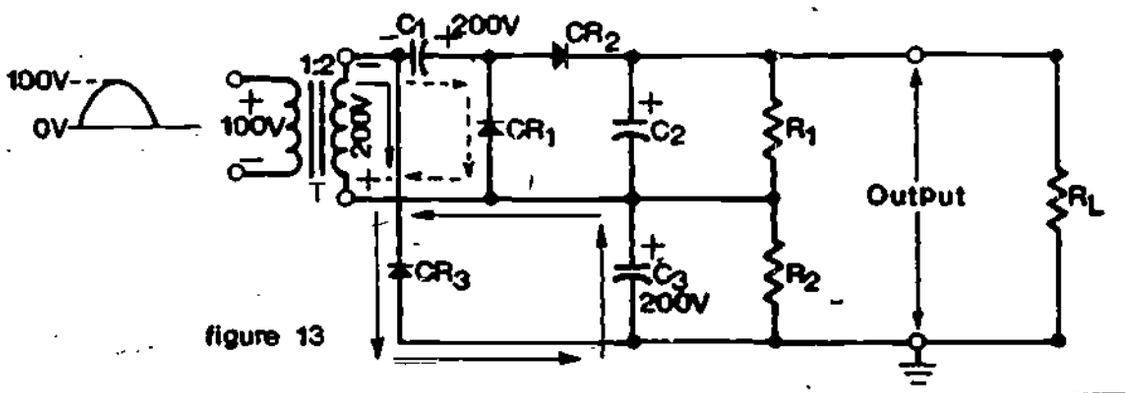


figure 13

HALF-WAVE VOLTAGE TRIPLER

When the transformer secondary is negative at the top, as shown in Figure 13, CR3 is forward biased and operates like a closed switch. Current now flows as shown by the arrows and C1 and C3 charge to 200. volts. Notice that at this time diode CR2 is reverse biased and therefore capacitor C2 cannot charge.

When current flows as indicated by the arrows in Figure 13, CR1 and CR3 are _____ _____ and operate like a _____ switch allowing C1 and C3 to charge.

---

forward biased, closed

31

14. Your understanding of half-wave voltage doublers will now help you understand how voltage triplers work. Figure 12 shows the schematic diagram for a voltage tripler.

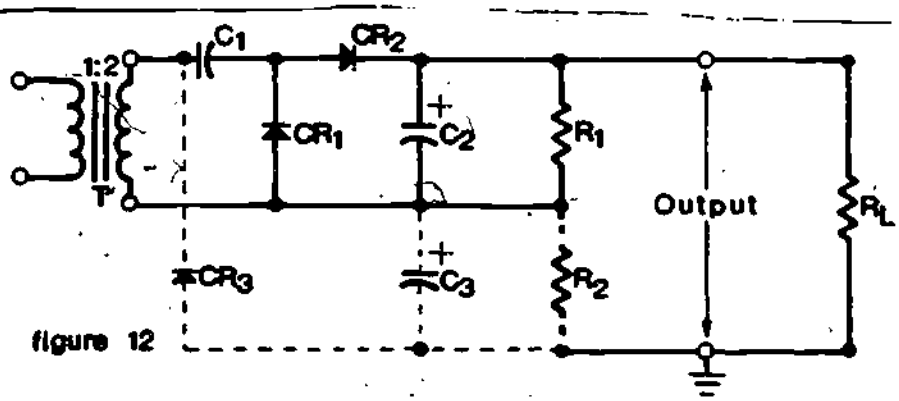


VOLTAGE TRIPLER

Notice that the schematic is identical to that of the half-wave voltage doubler except for the addition of components and circuitry shown with the broken lines. Of course, if you remove the added circuitry you will have a half-wave voltage doubler remaining.

The addition of another half-wave voltage rectifier to a half-wave voltage doubler creates a voltage tripler.

If a half-wave voltage rectifier is added to a half-wave voltage doubler the resulting circuit is a voltage _____.

---

tripler

# Trial and Error

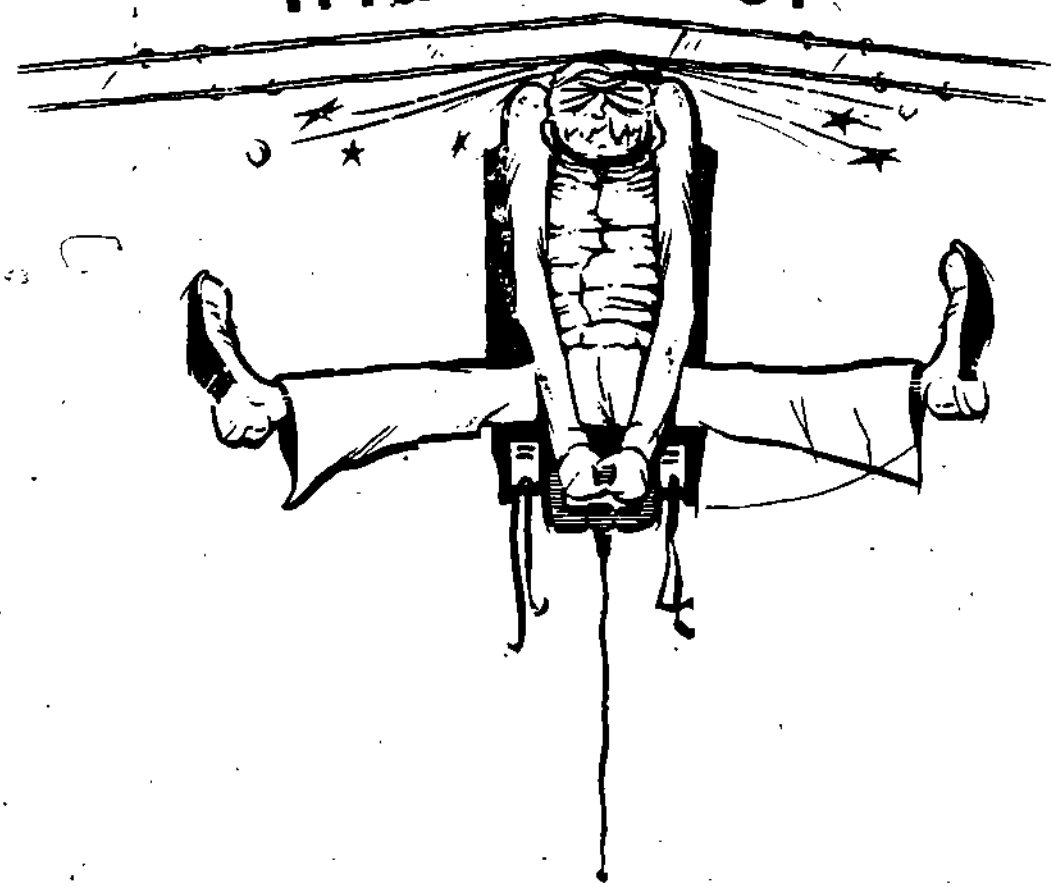

# CAN BE A DEADLY TEACHER

Contributed by AGRI W. E. Crosby Jr., VA 42 C60-GI-970

33

16. Now let's see what happens when the top of the transformer secondary is positive. Study the schematic shown in Figure 14, paying particular attention to the current flow shown by arrows.

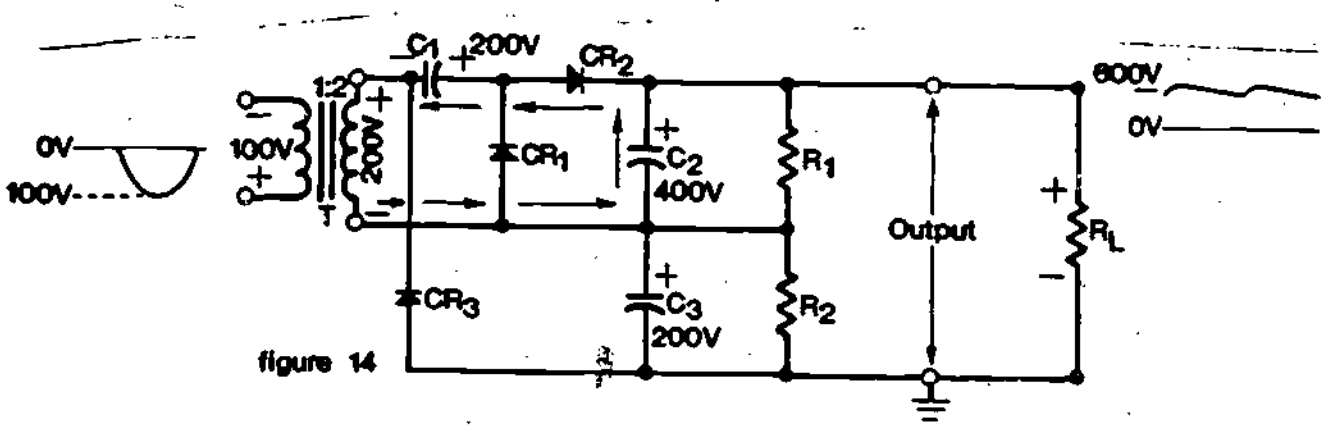


figure 14

HALF-WAVE VOLTAGE TRIPLER

When the top of the transformer secondary is positive, diode CR2 is forward biased and C2 charges to twice the input voltage or 400 volts. This is the result of the voltage doubling action of the transformer secondary and C1. At this time C2 and C3 function as series aiding and the total output increases to the sum of their voltages or 600 volts. When C2 and C3 function as series aiding, the total output voltage is _____ volts.

---

600

1. Forward biased, closed
2. 200
3. Forward biased, 400
4. Series aiding, 600

IF ALL YOUR ANSWERS MATCH GO ON TO TEST FRAME 24. OTHERWISE, GO BACK TO FRAME 14 AND TAKE THE PROGRAMMED SEQUENCE BEFORE TAKING TEST FRAME 17 AGAIN.

18. You now understand how half-wave voltage doublers and triplers work and how the various components contribute to the final output voltage. You also remember that some equipments use full-wave voltage rectifiers and multipliers. Instruction in the next several frames is concerned with full-wave voltage multipliers.

A full-wave voltage doubler has the advantage of better voltage regulation due to a reduction in the output ripple amplitude and an increase in the ripple frequency.

The main advantage of a full-wave voltage doubler is _____

_____.

---

better voltage regulation or something to that effect

(17) TEST FRAME

THIS IS A TEST FRAME. STUDY THE SCHEMATIC SHOWN IN FIGURE 15 AND ANSWER THE QUESTIONS WHICH FOLLOW.

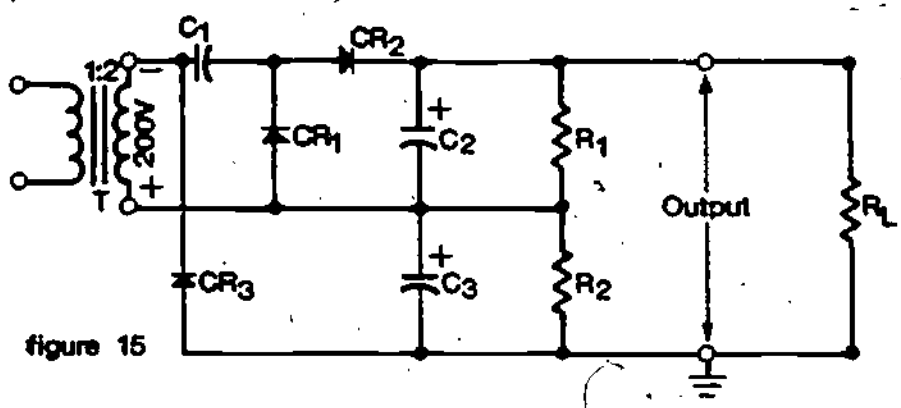

figure 15

1. When the top of the transformer secondary is negative, as shown in Figure I5, CR3 is _____ _____ and operates like a _____ switch.

2. During this time, C1 and C3 charge to _____ volts.

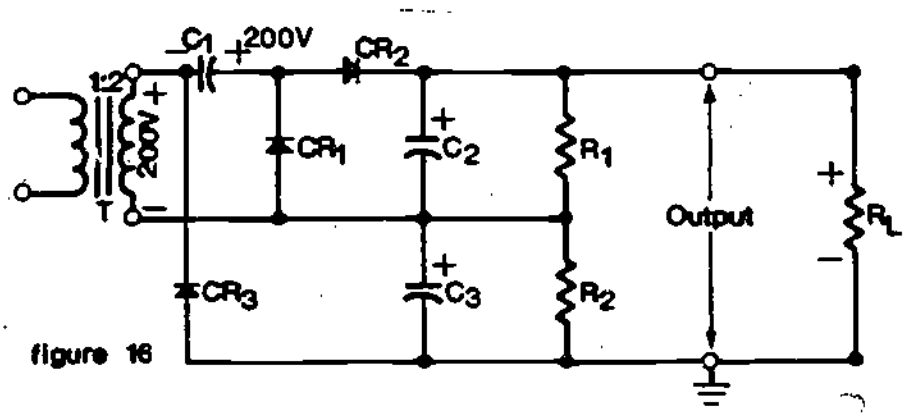

figure 16

3. When the top of the transformer secondary is positive, as shown in Figure 16, CR2 is _____ _____ allowing C2 to charge to _____ volts.

4. C2 and C3 function as _____ _____ voltage sources to provide a _____ volt output voltage.

COMPARE YOUR ANSWERS WITH THE CORRECT ANSWERS GIVEN ON THE TOP OF THE NEXT PAGE

21. Look at Figure 18. When the transformer secondary is polarized as shown, CR1 is reverse biased and CR2 is forward biased. With CR2 forward biased, a series circuit is created. The circuit consists of the transformer secondary, CR2 and C2. Current flows as shown in the schematic and C2 charges to its maximum potential of 200 volts.

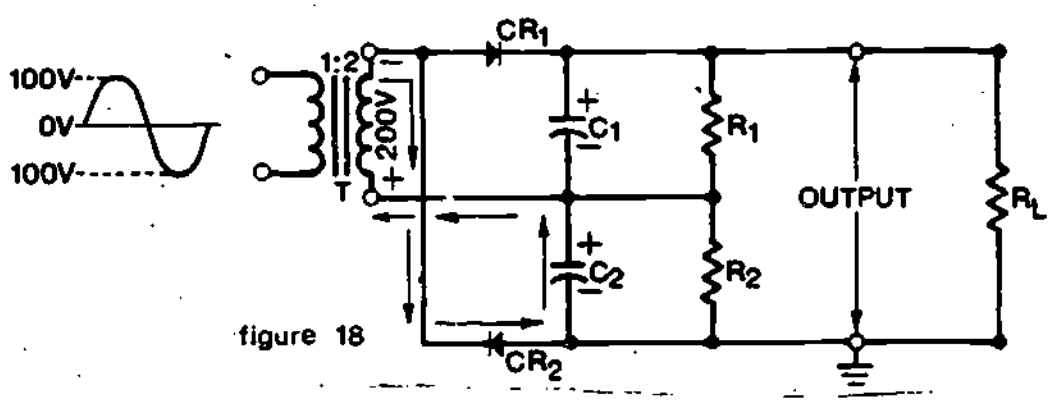


figure 18

CHARGING C2

When the top of the transformer secondary is negative, as shown in Figure 18, C2 charges to its maximum potential of _____ volts.

---

200

37

(19.) The schematic shown in Figure 17 is that of a full-wave voltage doubler. When you study the schematic you see that the circuit is in fact made up of two half-wave voltage rectifiers.

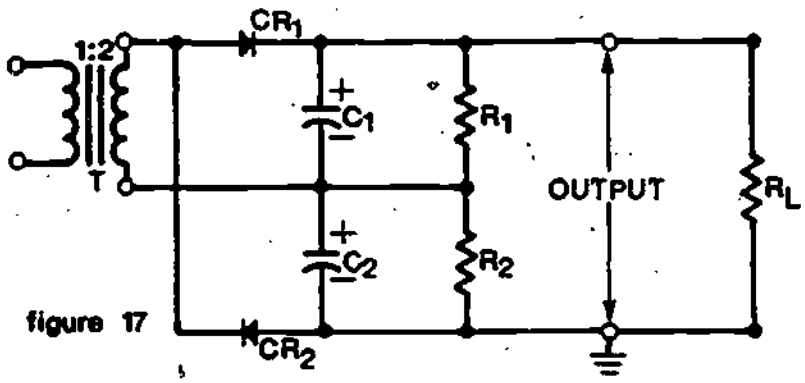


figure 17

FULL-WAVE VOLTAGE DOUBLER

A full-wave voltage doubler is made up of _____ half-wave voltage rectifiers.

---

two

(20.) As you study Figure 17 notice that both CR1 and CR2 are connected to the transformer secondary at the same point. Remember this, since it is a feature of all full-wave rectifiers and serves as a method of identifying or recognizing full-wave voltage doublers. Notice also that the capacitors are connected in parallel with the output load.

---

no response required

23. The schematic shown in Figure 20 shows what happens at the conclusion of one complete input cycle.

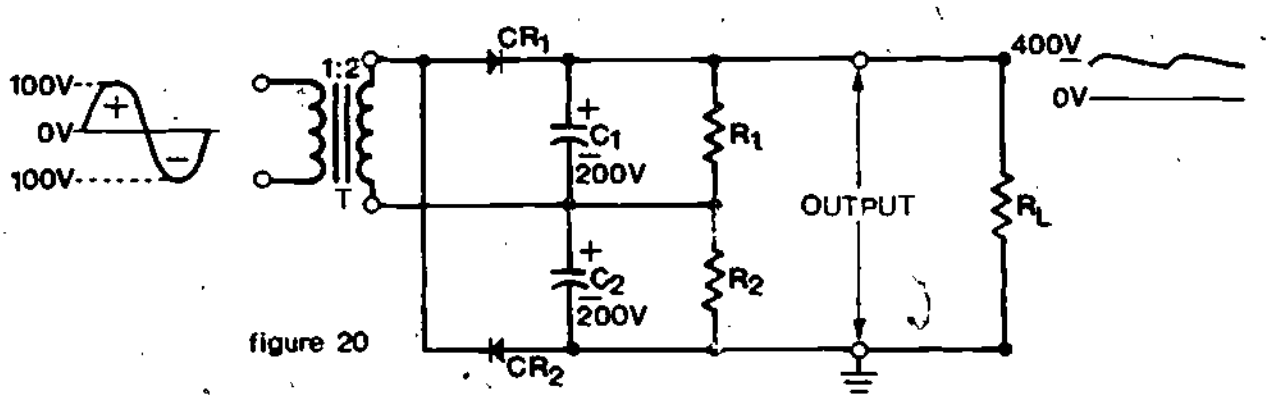


figure 20

FULL WAVE VOLTAGE DOUBLER

Notice that both capacitors have been charged to their maximum potential of 200 volts. They now discharge through equalizing resistors R1 and R2 and the circuit load $R_L$. Because the capacitors operate as series aiding the output voltage is equal to the sum of their potential or 400 volts. When C1 and C2 series aid the output voltage is equal to

_____ volts.

---

400

22. You have probably already concluded that when the transformer secondary is polarized as shown in Figure 19, CR1 and CR2 have opposite polarities. In other words CR1 is now forward biased or closed, and CR2 is reverse biased or open. A series circuit is now created consisting of the secondary of transformer T1, C1 and CR1.

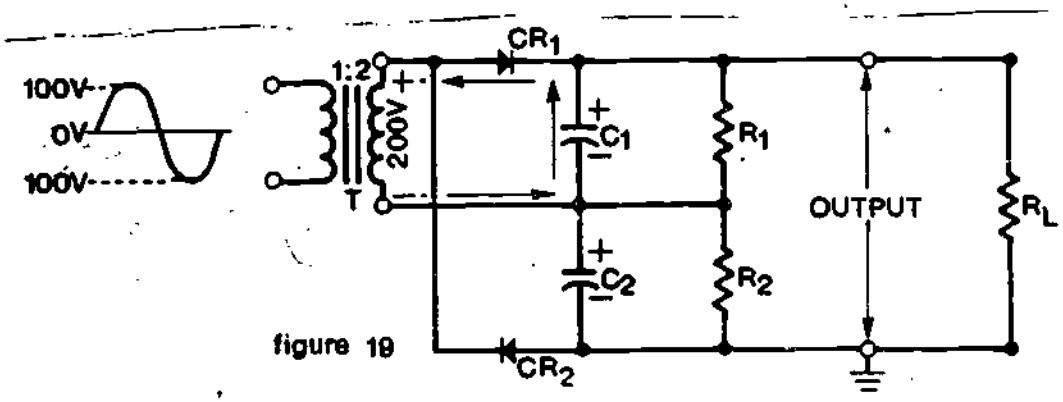


figure 19

CHARGING C1

C1 now charges to its maximum potential of 200 volts as shown on the schematic. Study Figure 19 to make sure you understand the current flow associated with charging the capacitor.

When the top of the transformer secondary is positive, CR1 is _____ biased and CR2 is _____ biased.

a. forward, reverse

b. reverse, forward

---

a. forward, reverse

1. full-wave voltage doubler

2. to the transformer secondary at the same place or something to that effect

3. CI, 200

4. reverse, forward

5. series aid

6. 400

IF YOUR ANSWER MATCHES THE CORRECT ANSWER YOU HAVE COMPLETED THE PROGRAMMED INSTRUCTION FOR LESSON I, MODULE THIRTY. OTHERWISE GO BACK TO FRAME I8 AND TAKE THE PROGRAMMED SEQUENCE BEFORE TAKING TEST FRAME 24 AGAIN.

AT THIS POINT, YOU MAY TAKE THE LESSON PROGRESS CHECK. IF YOU ANSWER ALL SELF-TEST ITEMS CORRECTLY, PROCEED TO THE JOB PROGRAM. IF YOU INCORRECTLY ANSWER ONLY A FEW OF THE PROGRESS CHECK QUESTIONS, THE CORRECT ANSWER PAGE WILL REFER YOU TO THE APPROPRIATE PAGES, PARAGRAPHS, OR FRAMES SO THAT YOU CAN RESTUDY THE PARTS OF THIS LESSON YOU ARE HAVING DIFFICULTY WITH. IF YOU FEEL THAT YOU HAVE FAILED TO UNDERSTAND ALL, OR MOST, OF THE LESSON, SELECT AND USE ANOTHER WRITTEN MEDIUM OF INSTRUCTION, AUDIO/VISUAL MATERIALS (IF APPLICABLE), OR CONSULTATION WITH LEARNING CENTER INSTRUCTOR, UNTIL YOU CAN ANSWER ALL SELF-TEST ITEMS ON THE PROGRESS CHECK CORRECTLY.

(24.) THIS IS A TEST FRAME. COMPARE YOUR ANSWERS TO THE QUESTIONS WITH THE ANSWERS GIVEN AT THE TOP OF THE NEXT PAGE.

The questions which follow depend on your understanding of the circuitry shown in Figure 21. Study the schematic before attempting the questions.

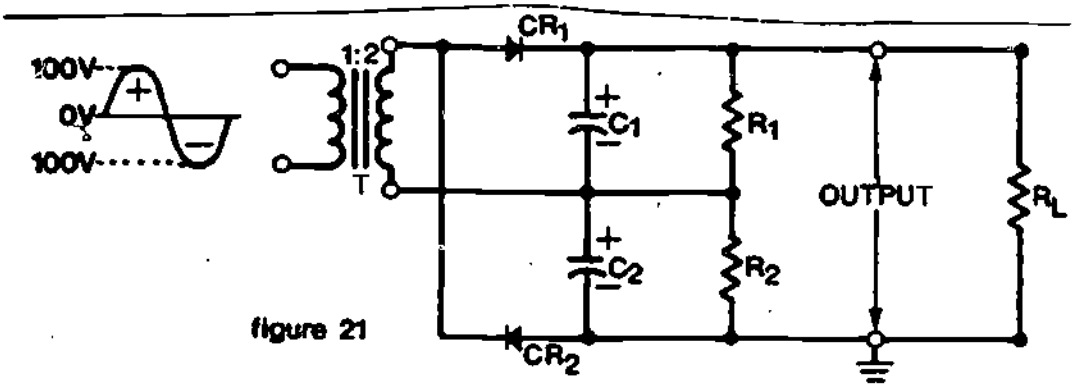


figure 21

1. The schematic shown in Figure 21 is that of a _____ _____ _____.

2. One of the characteristics of this type of circuit is that both diodes are connected _____.

3. When the top of the transformer secondary is positive, _____ charges to its maximum potential of _____ volts.

4. When the top of the transformer secondary is negative, CR1 is _____ biased and CR2 is _____ biased.

5. The total output voltage equals the sum of the voltages across C1 and C2 because the capacitors _____ _____ each other.

6. The output voltage of the circuit shown is _____ VDC.

The schematic diagrams in this lesson show a transformer input even though for some applications a transformer is not necessary. As you know the input could be direct from the power source or line. This, of course, does not isolate the equipment from the line and creates a potentially hazardous condition. Most military equipments use transformers to minimize this hazard.

Figure 1 shows the schematic for a half-wave voltage doubler.

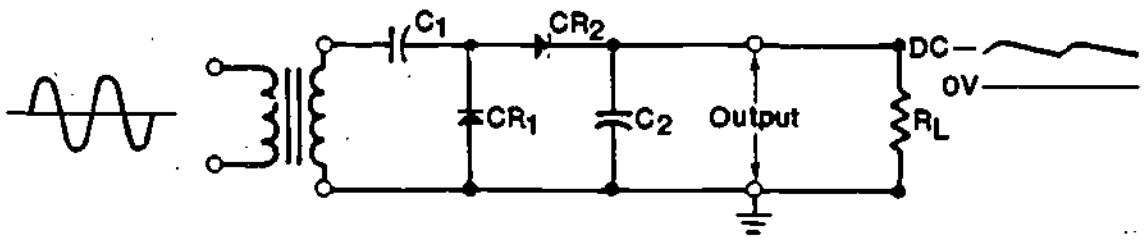


Figure 1

HALF-WAVE VOLTAGE DOUBLER

Notice the similiarities between the schematic and that of half-wave voltage rectifiers which you are already familiar with. The doubler shown is in fact made up of two half-wave voltage rectifiers. C1 and CR1 make up one half-wave rectifier and C2 and CR2 make up the other. The schematic of the first half-wave rectifier is shown with dark lines in Figure 2. The dotted lines and associated components represent the other half-wave rectifier and load resistor.

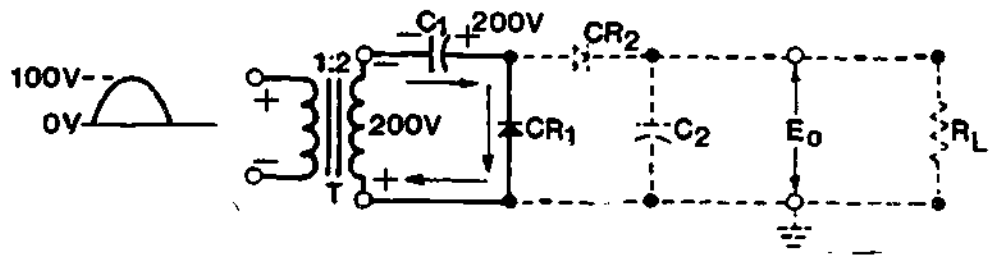


Figure 2

RECTIFICATION ACTION - CR1

NARRATIVE
LESSON 1

## Voltage Multipliers

In previous lessons you learned how a transformer functions to increase or decrease voltages. You also learned that a transformer secondary may provide one or several AC voltage outputs and that these voltages may be greater than or less than the input voltage. You also learned that when voltages are stepped up there is a corresponding decrease in current, and that when voltages are stepped down the current is increased.

This lesson describes another method for increasing voltages. The method and circuitry is called voltage multiplication. Voltage multipliers are used primarily to develop high voltages where low current is required. The most common application of the high voltage outputs of voltage multipliers is the anode of cathode-ray tubes (CRT) used for radar scope presentations, oscilloscope presentations, or TV picture tubes. The DC output of the voltage multiplier ranges from one thousand to thirty thousand volts. The actual voltage depends upon the size of the CRT and its equipment application.

Voltage multipliers may also be used as primary power supplies where a 117 VAC input is rectified to pulsating DC. This DC output voltage may be increased, (through use of a voltage multiplier) to as much as 1000 VDC. This voltage is generally used as the plate or screen grid voltage for electron tubes.

When you studied transformers you learned that when voltage is stepped up, the output current decreases. This is also true of voltage multipliers. Although the measured output voltage of a voltage multiplier may be several times greater than the input voltage, once a load is connected the value of the output voltage decreases.

Also any small fluctuation of load impedance causes a large fluctuation in the output voltage of the multiplier. For this reason, voltage multipliers are only used in special applications where the load is constant and has a high impedance or where input voltage stability is not critical.

Voltage multipliers may be classified as voltage doublers, triplers, or quadruplers. The classification depends on the ratio of the output voltage to the input voltage. For example, a voltage multiplier that increases the peak input voltage twice is called a voltage doubler. Other voltage multipliers are designated as triplers or quadruplers depending on the voltage increase ratio. Voltage multipliers increase voltages through the use of series aiding voltage sources. This is comparable to connecting dry cells in series.

The effect of the series aiding is comparable to connecting two 200V batteries in series. As shown in Figure 4, C2 charges to the sum of these voltages, or 400 volts.

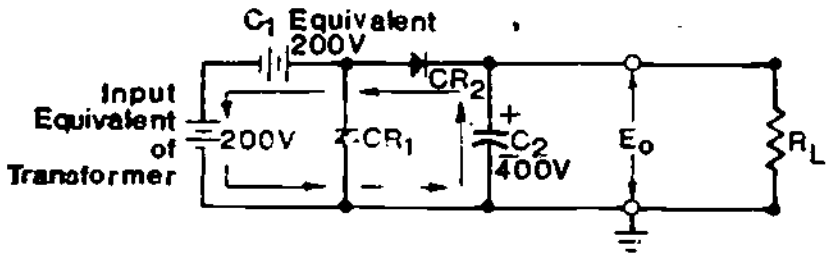


Figure 4

SERIES AIDING SOURCES

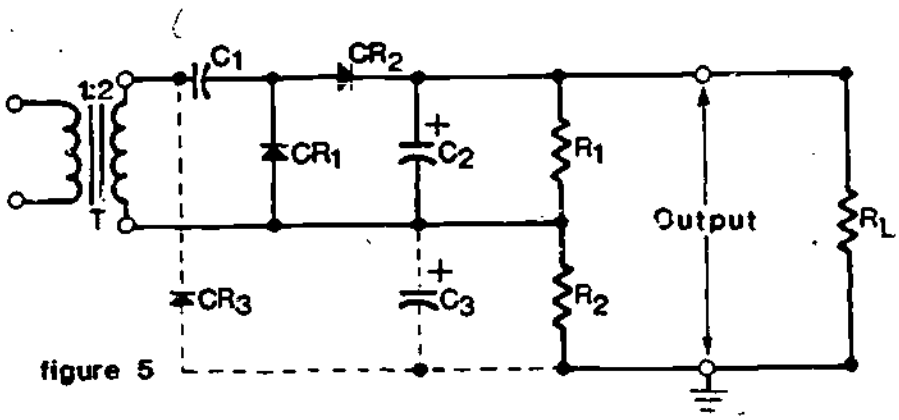


Figure 5

HALF WAVE VOLTAGE TRIPLER

The schematic shown in Figure 5 is a schematic for a half-wave voltage tripler.

When you compare Figures 4 and 5 you can readily see that the circuitry is identical except for the additional parts/components and circuitry shown with dotted lines. CR3, C3 and R2 make up the additional circuitry. By themselves these components make up a half-wave rectifier. Of course, if you remove the added circuitry you again have a half-wave voltage doubler.

As you study Figure 2 you see that C1 and CR1 work exactly like a half-wave rectifier. During the positive alternation of the input cycle the polarity across the secondary winding of the transformer is as shown in Figure 2. Note particularly that the top of the secondary is negative. At this time CR1 is forward biased (cathode negative in respect to the anode). This causes CR1 to function like a closed switch. This allows current to follow the path indicated by arrows on the schematic and causes C1 to charge to the peak value of the input voltage or 200 volts with the polarity shown.

During the period when the input cycle is negative as shown in Figure 3, the polarity across the secondary of the transformer is reversed.

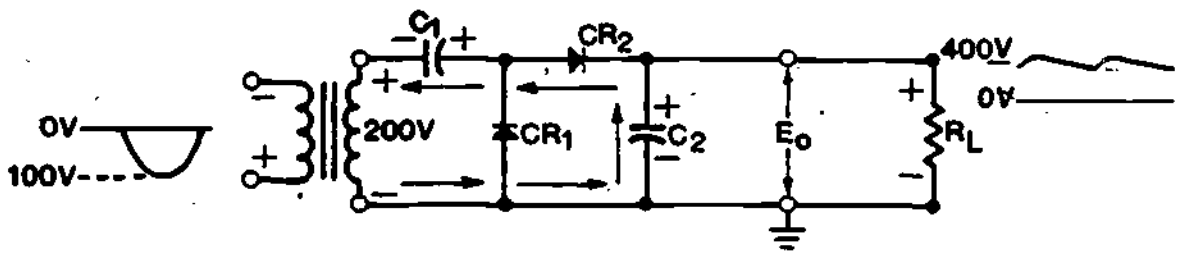


Figure 3

RECTIFICATION ACTION - CR2

Note specifically that the top of the secondary winding is now positive. This condition now forward biases CR2 and reverse biases CR1. A series ciruit now exists consisting of C1, CR2, C2 and the secondary of the transformer.

Study the current flow shown with arrows. The secondary voltage of the transformer now aids the voltage on C1. This results in a pulsating DC voltage of 400 volts as shown by the waveform.

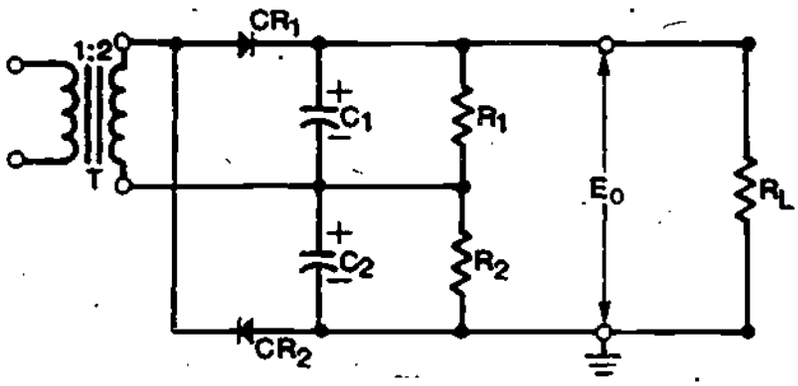


Figure 8

FULL-WAVE VOLTAGE DOUBLER

The circuit shown in Figure 8 is that of a full-wave voltage doubler. The main advantage of a full-wave doubler over a half-wave doubler is better voltage regulation, due to a reduction in the output ripple amplitude and an increase in the ripple frequency.

As you examine the schematic you see that the circuit is in fact two half-wave rectifiers. These rectifiers function as series riding except in a slightly different way.

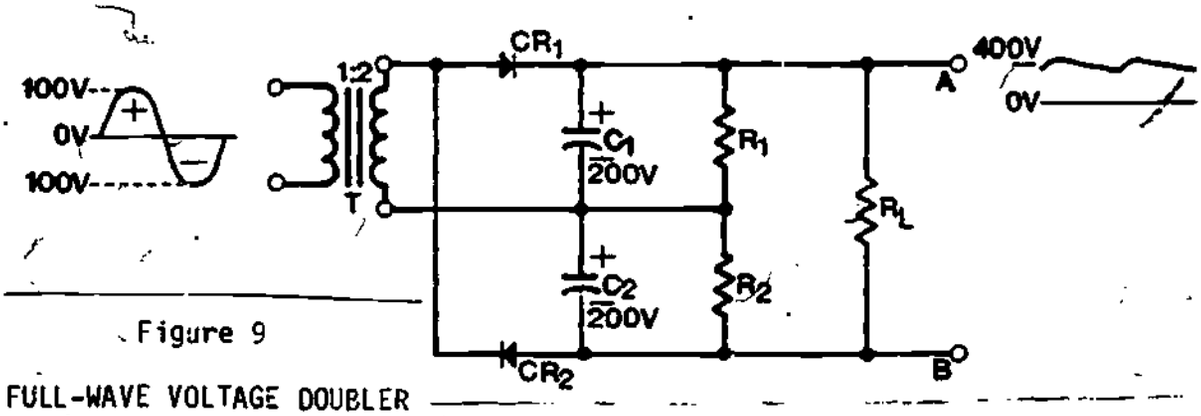


Figure 9

FULL-WAVE VOLTAGE DOUBLER

During the alternation when the secondary of the transformer is positive at the top C1 charges to 200 volts through CR1. Then, when the transformer secondary is negative at the top, C2 charges to 200 volts through CR2. R1 and R2 are equal value balancing resistors which stabilize the charges of the two capacitors. Resistive load $R_L$ is connected across C1 and C2 so that it receives the total charge of both capacitors. The output voltage is +400 volts when measured at the top of $R_L$ or point "A" with respect to point "B". If the output is measured at the bottom of $R_L$ it is -400 V. Either way the output is twice the peak value of the AC secondary voltage. As you can see the possibilities for voltage multiplication are almost limitless.

Now look at Figure 6. This figure shows the schematic for the voltage tripler. When you study the schematic notice that CR3 is forward biased and functions like a closed switch. This allows C3 to charge to a peak voltage of 200 volts at the same time C1 is also charging to 200 volts.

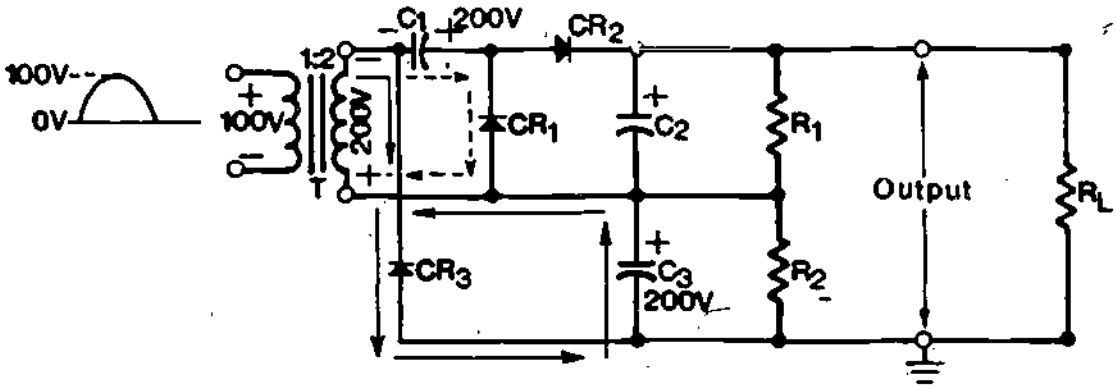


Figure 6

VOLTAGE TRIPLER

Look at the other half of the input cycle in Figure 7. C2 is charged to twice the input voltage or 400 volts as a result of the voltage doubling action of the transformer and C1. At this time C2 and C3 function as series aiding and the output voltage increases to the sum of their respective voltages or 600 volts.

R1 and R2 are proportional according to the voltages across C2 and C3, or in this case a 2 to 1 ratio.

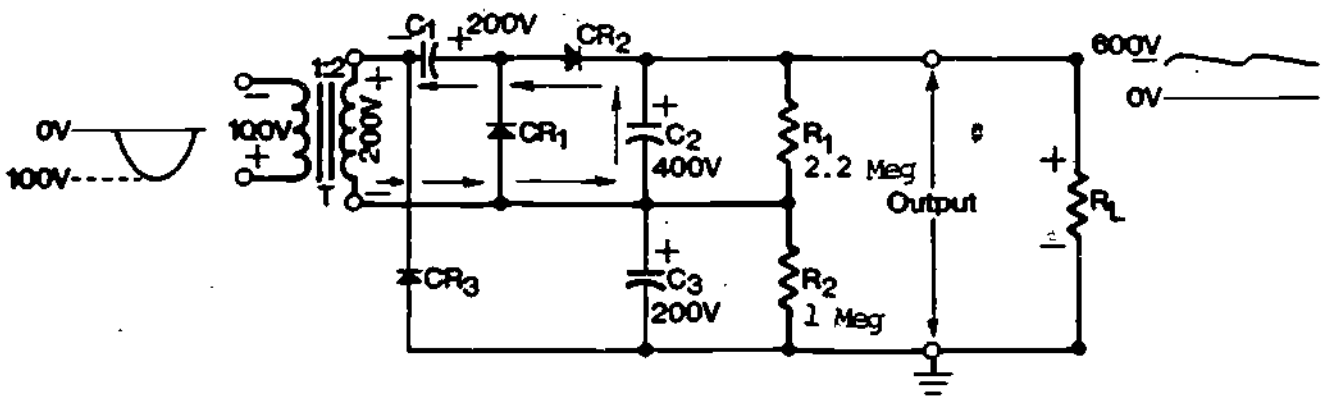


Figure 7

VOLTAGE TRIPLER

BASIC ELECTRICITY AND ELECTRONICS

MODULE THIRTY

LESSON 2

# TRANSISTOR, VOLTAGE, AND CURRENT REGULATORS

JULY 1980

49

AT THIS POINT, YOU MAY TAKE THE LESSON PROGRESS CHECK. IF YOU ANSWER ALL SELF-TEST ITEMS CORRECTLY, PROCEED TO THE JOB PROGRAM. IF YOU INCORRECTLY ANSWER ONLY A FEW OF THE PROGRESS CHECK QUESTIONS, THE CORRECT ANSWER PAGE WILL REFER YOU TO THE APPROPRIATE PAGES, PARAGRAPHS, OR FRAMES SO THAT YOU CAN RESTUDY THE PARTS OF THIS LESSON YOU ARE HAVING DIFFICULTY WITH. IF YOU FEEL THAT YOU HAVE FAILED TO UNDERSTAND ALL, OR MOST, OF THE LESSON, SELECT AND USE ANOTHER WRITTEN MEDIUM OF INSTRUCTION, AUDIO/VISUAL MATERIALS (IF APPLICABLE), OR CONSULTATION WITH LEARNING CENTER INSTRUCTOR, UNTIL YOU CAN ANSWER ALL SELF-TEST ITEMS ON THE PROGRESS CHECK CORRECTLY.

30.2.49.6 IDENTIFY the schematic diagrams of voltage comparator and Darlington amplifier circuits by selecting the correct name or diagram from a choice of four. 100% accuracy is required.

30.2.49.7 IDENTIFY the function of components and circuit operation of voltage comparator and Darlington amplifier circuits by selecting the correct statement from a choice of four. 100% accuracy is required.

30.2.49.8 CALCULATE the current gain for a given Darlington amplifier circuit by selecting the correct value from a choice of four. 100% accuracy is required.

30.2.49.9 IDENTIFY the schematic diagram of practical current regulator and current limiter circuits by selecting the correct name of the diagram from a choice of four. 100% accuracy is required.

30.2.49.10 IDENTIFY the purpose of current regulators and current limiters by selecting the correct statement from a choice of four. 100% accuracy is required.

30.2.49.11 IDENTIFY the function of components which make up the individual circuits within a complete transistor type voltage regulating device given a schematic diagram of the device.*

30.2.49.12 MEASURE and COMPARE current and voltage outputs in voltage and current regulator circuits given a training device, circuit boards, test equipment and proper tools, schematic diagrams and a job program containing references for comparison. Recorded data must be within limits stated in the job program.

30.2.49.13 IDENTIFY the faulty component, or the circuit malfunction, in a given voltage and current regulator, given a schematic diagram and failure symptoms, by selecting the correct fault from a choice of four. 100% accuracy is required.*

---

Footnote: * These objectives are considered met upon successful completion of the terminal objective.

BEFORE YOU START THIS LESSON, READ THE LESSON LEARNING OBJECTIVES AND PREVIEW THE LIST OF STUDY RESOURCES ON THE NEXT PAGE.

# OVERVIEW
# LESSON 2

## Transistor, Voltage, and Current Regulators

In this lesson you will learn about voltage and current regulating devices and how the regulators operate to maintain constant outputs. You will also learn how these regulating devices operate independently and together to maintain circuit stability. You will also become familiar with each circuit's schematic and learn to identify faulty circuit components.

The learning objectives of this lesson are as follows:

TERMINAL OBJECTIVE(S):

30.2.49 When the student completes this lesson, (s)he will be able to TROUBLESHOOT and IDENTIFY faulty components and/or circuit malfunctions of a complete regulating device when given a prefaulted circuit board, schematic diagram, necessary test equipment, and instructions. 100% accuracy is required.

ENABLING OBJECTIVES:

When the student completes this lesson, (s)he will be able to:

30.2.49.1 IDENTIFY the purpose of voltage and current regulators by selecting the correct statement from a choice of four. 100% accuracy is required.

30.2.49.2 IDENTIFY the schematic diagrams and operating characteristics of simplified basic series and shunt voltage regulator circuits by selecting the correct name or statement from a group of four. 100% accuracy is required.

30.2.49.3 IDENTIFY the schematic diagrams of practical series, shunt, and variable shunt voltage regulator circuits by selecting the correct name or diagram from a choice of four. 100% accuracy is required.

30.2.49.4 IDENTIFY the function of components and circuit operation of practical series, shunt, and variable shunt voltage regulator circuits by selecting the correct statement from a choice of four. 100% accuracy is required.

30.2.49.5 IDENTIFY the function of voltage comparator and Darlington amplifiers within voltage regulator circuits by selecting the correct statement from a choice of four. 100% accuracy is required.

SUMMARY
LESSON 2

Transistor, Voltage and Current Regulators

This lesson covers circuits which are designed to regulate and maintain a constant voltage and current output and are called either voltage or current regulators depending on their purpose. Many are designed to maintain voltage or current outputs within plus or minus (±) 0.1 percent.

The two types of basic voltage regulators are series and shunt. The classification of the regulator depends on how it is connected in the total circuit. Series regulators are connected in series while the shunt type regulator is connected in parallel with the output load resistance. This is a basic concept that you should keep in mind as you complete this lesson.

A simple series type voltage regulator schematic is shown in Figure 1. Voltages are shown to help explain how the regulator works and enable you to understand the regulator's operation more readily.

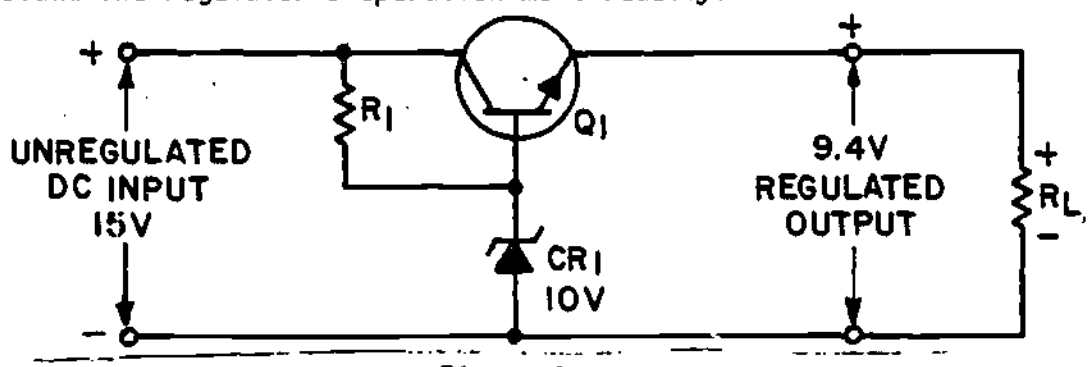


Figure 1

SERIES TYPE VOLTAGE REGULATOR

Q1 is used to regulate the voltage and functions in much the same way as a variable resistor would function. The main advantage of using the transistor is that it responds almost instantaneously to changes in input voltage or load current. The Zener diode CR1 blocks current flow until the applied voltage reaches or exceeds the Zener or break down voltage and provides a reference voltage for the base of Q1. Since Q1 is a series dropping device all current from the power supply flows through it. Q1 compensates for increases and decreases in input voltage and load current by changing its forward bias and resistance. With a 15 volt input voltage and a 10 volt Zener voltage, the regulated DC output is 9.4 volts. This results in a 0.6 volt voltage drop between the base and emitter of Q1.

LIST OF STUDY RESOURCES
LESSON 2

## Transistor, Voltage and Current Regulators

To help you learn materials in this lesson, you have the option of choosing, according to your experience and preferences, any or all of the following study resources:

Written Lesson presentation in:

Module Booklet:

Summary
Programmed Instruction
Narrative

Student's Guide:

Summary
Progress Check
Job Program Thirty-2 "Transistor, Voltage and Current Regulators"
Troubleshooting Transistors I.S.
Fault Analysis (Paper Troubleshooting) I.S.
Performance Test I.S.

Additional Material(s):

35 mm sound/slide, "Thirty-2 Transistor, Voltage and Current Regulators"

Enrichment Material(s):

NAVSHIP 0967-000-0120 "Electronic Circuits", Electronics Installation and Maintenance Book (EIMB), Naval Ship Engineering Center, Washinton, D.C.: U.S. Government Printing Office, 1965.

YOU MAY USE ANY, OR ALL, RESOURCES LISTED ABOVE, INCLUDING THE LEARNING CENTER INSTRUCTOR. HOWEVER, ALL MATERIALS LISTED ARE NOT NECESSARILY REQUIRED TO ACHIEVE LESSON OBJECTIVES. THE PROGRESS CHECK MAY BE TAKEN AT ANY TIME.

With a 10 volt output voltage and Zener voltage of 9.3 volts the voltage drop across R1 is 5.7 volts as long as the circuit is providing a 15 volt input. Rs is the key component of this circuit because CR1 and R1 are connected in parallel with the load and any change in voltage is also reflected across R1. Any change in voltage drop across R1 results in a change in the forward bias of Q1 and therefore a change in the amount of current that is allowed to flow through the transistor. A good technique to help you understand and remember how the regulator compensates for changes in voltage is to substitute values that are different from those shown on the schematic and make the necessary mathematic computations.

Changes in load current are compensated for by Rs and Q1. For example, an increased load current results in an increased voltage drop across the series dropping resistor Rs. This action reduces the forward bias for Q1. Q1 compensates by increasing its resistance thereby reducing the amount of current that flows through it. Since less current flows through the transistor more current is allowed to flow through the load resistance. This returns the voltage drop across Rs to its former state. The components operate in the opposite way when the load current decreases.

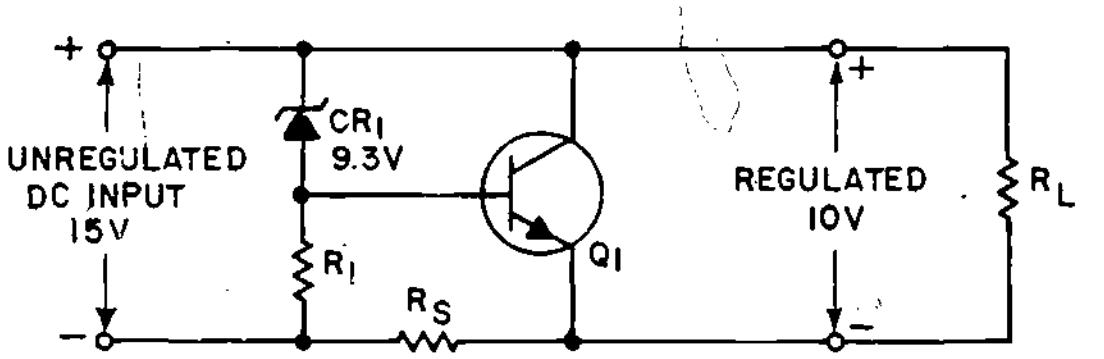


Figure 2

SHUNT TYPE VOLTAGE REGULATOR

Momentary increases or decreases in input voltage result in momentary changes in output voltage. Q1 compensates by increasing or decreasing its resistance, and the voltage drop changes in accordance with the amount of the transistors forward bias. In this way the transistor maintains a constant output voltage.

Again refer to the schematic. When the load current changes there is a change in voltage drop across RL. This results in a change in the voltage drop across Q1 and the transistor compensates for changes in load current in much the same way that it compensates for changes in input voltage. Before proceeding further make sure you understand how the circuit shown compensates for increases and decreases in input voltage and load current.

The schematic for a shunt type voltage regulator is shown in Figure 2. Except for the addition of resistor Rs the components of this circuit are identical with those of the series regulator. The other difference is the regulating device is connected in parallel with the load resistance. Note that the series dropping resistor Rs is connected in series with the load resistance and that CR1 and limiting resistor RI function as a voltage divider to provide a constant DC potential to the base-collector of Q1.

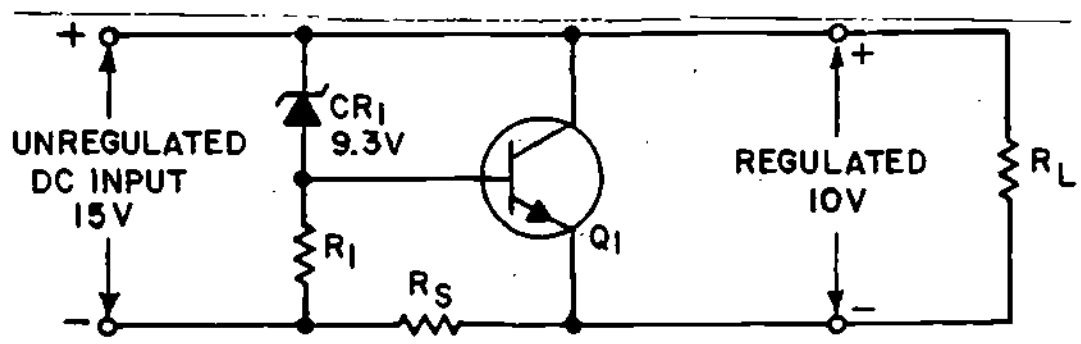


Figure 2

SHUNT TYPE VOLTAGE REGULATOR

Figure 4 is the schematic of a circuit which you will encounter quite frequently and is called a Darlington type amplifier.

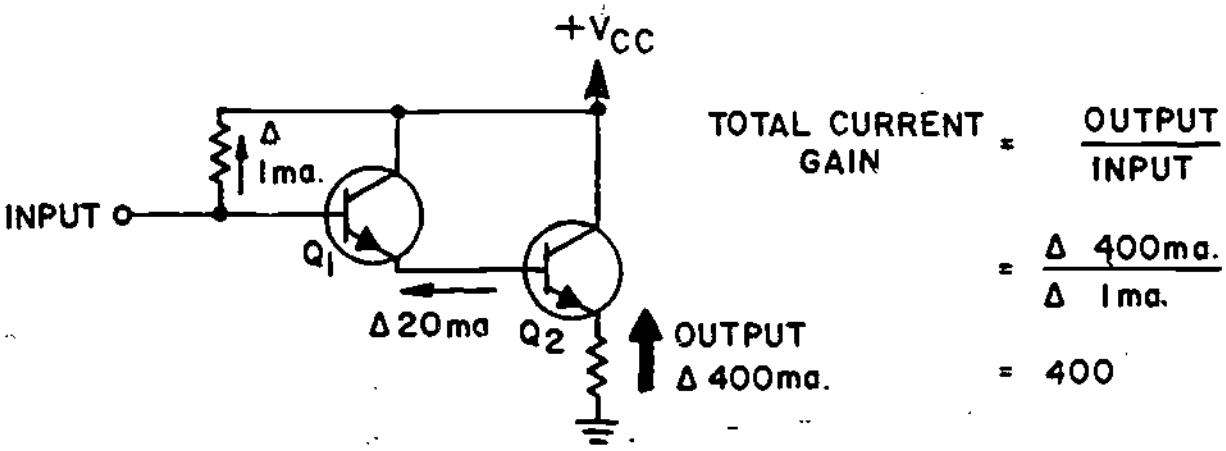


Figure 4

DARLINGTON AMPLIFIER

The advantage of the Darlington amplifier is high input impedance and high gain. The Greek letter Delta, which is represented by an equilateral triangle, is used to designate "a change of." Notice that the emitter output current of one transistor is the base current for the other transistor. This type of circuitry results in a current gain which is the product of the current gains in the individual transistors. In the example shown both transistors have a gain of 20. Therefore a 1 milliampere change at the base of Q1 will result in a total current output of 400 milliamperes. The possible combinations, of course, are endless.

A voltage comparator provides more precise regulation. The schematic for a typical comparator is shown in Figure 3.

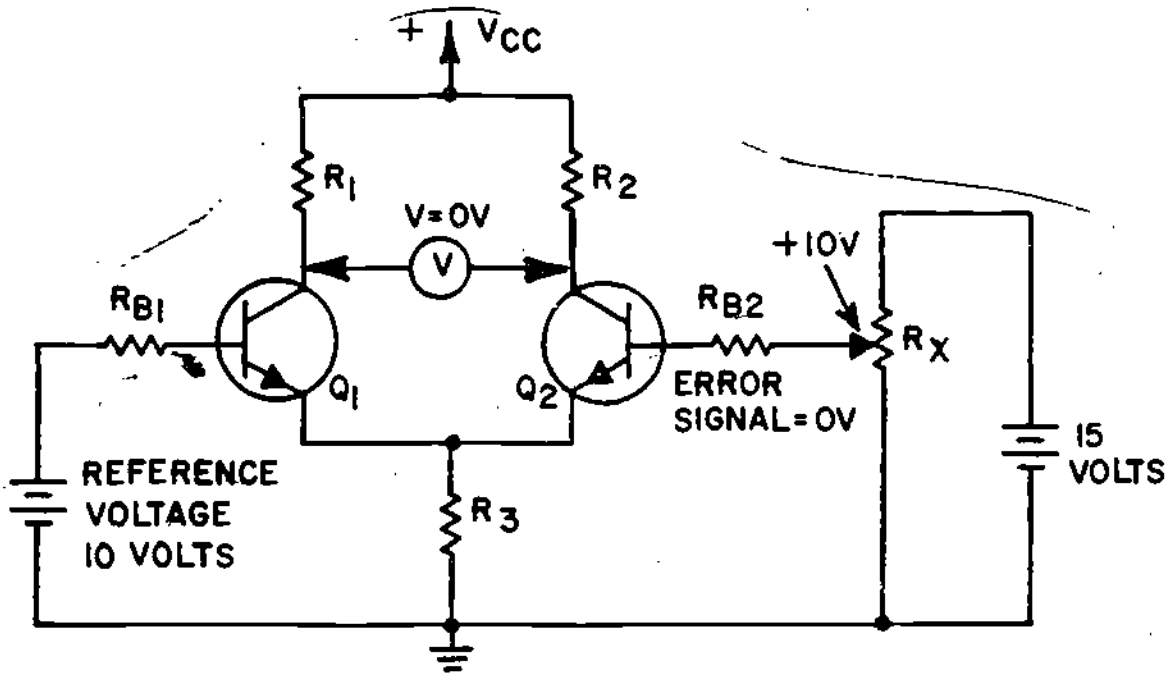


Figure 3

VOLTAGE COMPARATOR

The voltage comparator is sometimes called a differential amplifier because it amplifies the difference between the inputs to Q1 and Q2. These transistors are identical and load resistors R1 and R2 are also identical. So long as the voltage applied to the base of both transistors is equal the circuit remains balanced and has no output. The comparator functions because the collector voltages of the transistors are 180° out of phase with each other. In other words when the collector voltage of Q2 is more positive, the collector voltage of Q1 is less positive.

Sometimes it is necessary to regulate current output. Circuits which are used to regulate current output are called current regulators. The schematic for a simple current regulator is shown in Figure 6. In many respects this circuit is identical with that of a series voltage regulator. The main difference is that an additional component has been added. This component, R1, is connected in series with the diode and senses current changes.

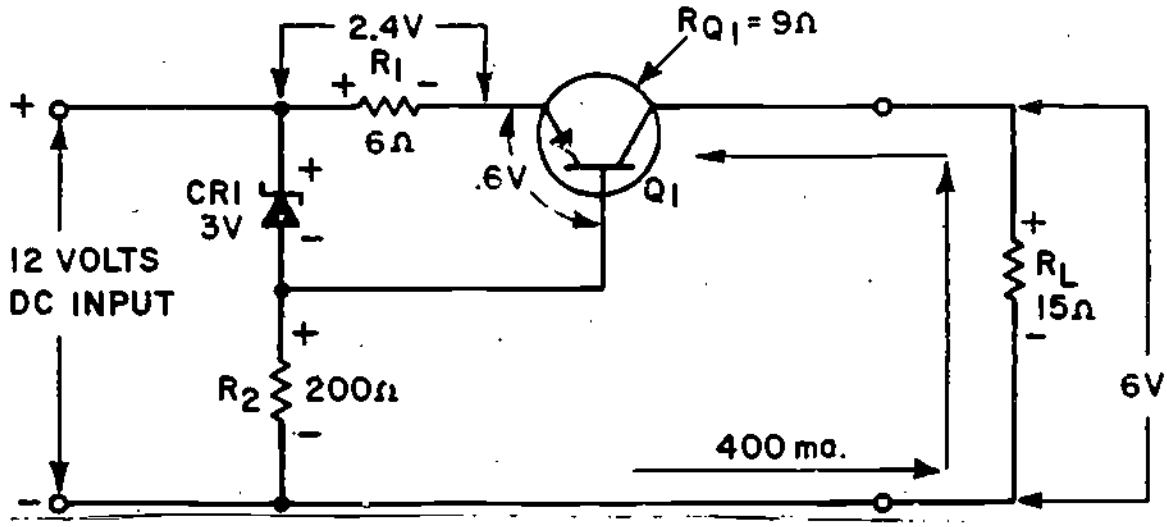


Figure 6

CURRENT REGULATOR

Voltages are shown on the schematic to help you understand how the current regulator operates. Study the schematic and note that the bias of Q1 is the difference between the voltages across Zener diode CR1 and R1. Since these components have opposite polarities the bias of the transistor is the difference between the two voltages.

Changes in the circuit load resistance causes a corresponding increase or decrease in current flow through the regulating device. Changes in load resistance are offset by corresponding changes in the transistor resistance. For example, a 5 ohm increase in the transistor resistance is the result of a 5 ohm decrease in the load resistance. Because the circuit is a current regulator the current remains constant. However, regulating the current in this way results in changes in the output voltage.

The schematic shown in Figure 7 is a current limiter. This type of circuit is used to prevent damage to delicate circuits which use semiconductor devices.

The schematic shown in Figure 5 combines a voltage comparator and Darlington type amplifier.

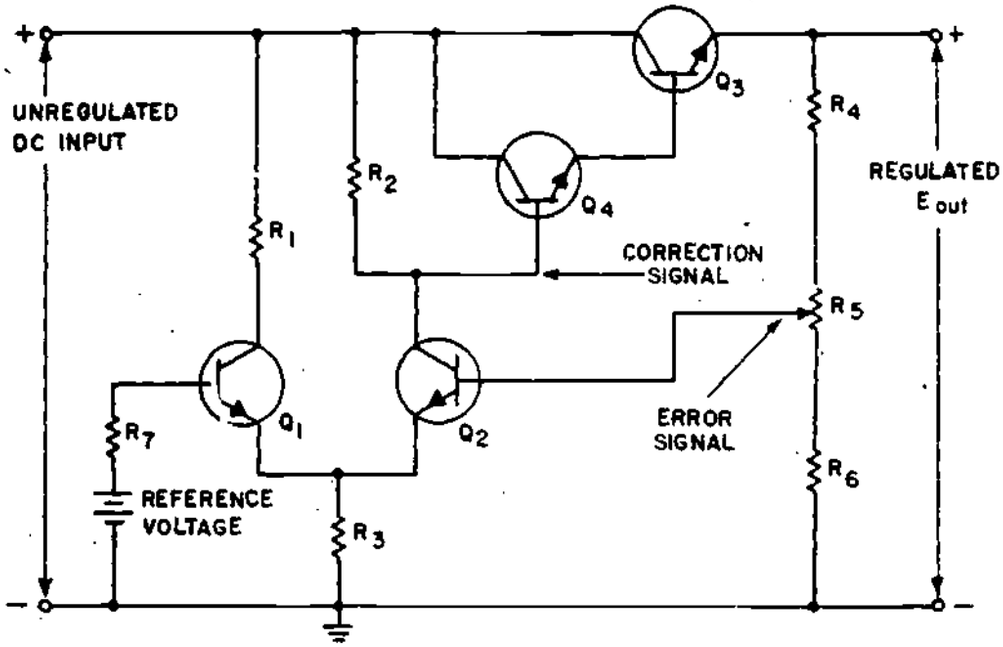


Figure 5

DARLINGTON AMPLIFIER + VOLTAGE COMPARATOR

Study the schematic to make sure you understand how the two circuits work together to maintain a regulated DC output. If you have difficulty understanding how these two circuits work together, you may wish to view the tape slide presentation for this lesson or study the programmed instruction or narrative form of this lesson.

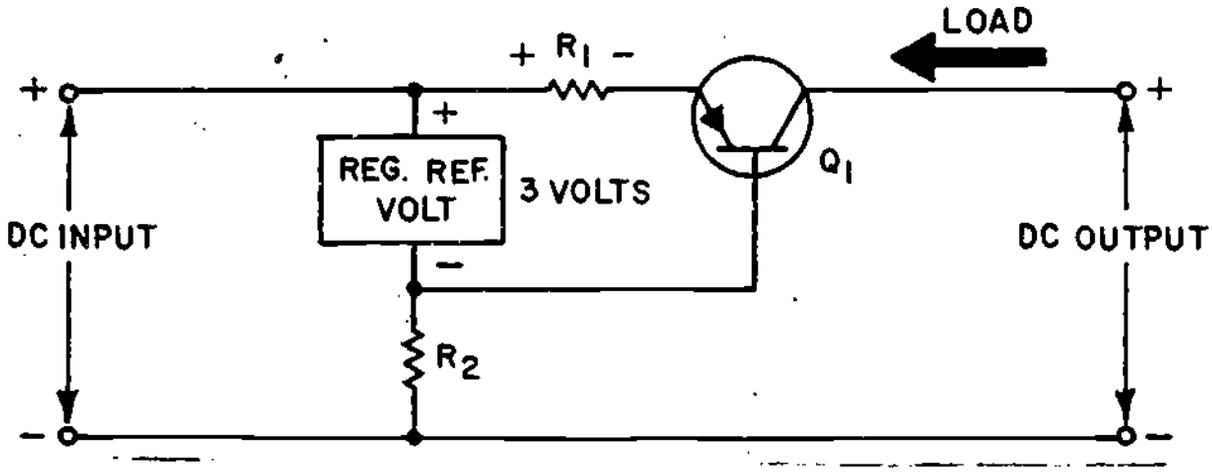


Figure 7

CURRENT LIMITER

Since the current limiter has a short response time it protects critical circuits against current overload. Notice that the schematic is identical with the schematic for the current regulator. The only difference between a current regulator and current limiter is the size, or value, of the series dropping resistor. The resistor which is used in the current limiter is smaller than the resistor which is used in the regulator. In order for the limiter to operate a reference voltage must be provided. This is shown in the schematic as a box. If you are unable to recall how circuits provide reference voltages refer to other parts of this lesson, the narrative, programmed instruction, or audio visual materials.

Changes in the transistor's bias and resistance compensate for changes in load current. Make sure you understand the basic operation of the limiter before proceeding further.

You should now be familiar with circuits which are used to regulate and control voltage and current outputs. As you complete the job program for this lesson you work with the NIDA model 201 power supply trainer. The circuits which are used in this trainer combine all the regulation circuits you have studied. When you become familiar with the NIDA equipment you will better understand how regulator devices operate together to accomplish complete regulation.

AT THIS POINT, YOU MAY TAKE THE LESSON PROGRESS CHECK. IF YOU ANSWER ALL SELF-TEST ITEMS CORRECTLY, PROCEED TO THE JOB PROGRAM. IF YOU INCORRECTLY ANSWER ONLY A FEW OF THE PROGRESS CHECK QUESTIONS, THE CORRECT ANSWER PAGE WILL REFER YOU TO THE APPROPRIATE PAGES, PARAGRAPHS, OR FRAMES SO THAT YOU CAN RESTUDY THE PARTS OF THIS LESSON YOU ARE HAVING DIFFICULTY WITH. IF YOU FEEL THAT YOU HAVE FAILED TO UNDERSTAND ALL, OR MOST, OF THE LESSON, SELECT AND USE ANOTHER WRITTEN MEDIUM OF INSTRUCTION, AUDIO/VISUAL MATERIALS (IF APPLICABLE) OR CONSULTATION WITH LEARNING CENTER INSTRUCTOR, UNTIL YOU CAN ANSWER ALL SELF-TEST ITEMS ON THE PROGRESS CHECK CORRECTLY.

constant voltage or current function. The circuits which maintain power supply voltage or current outputs within specified limits, or tolerances, are called regulators.

They are designated as DC voltage or DC current regulators depending on their specific application.

Circuits which maintain constant voltage or current outputs are called DC voltage or DC current_____.

---

regulators

3. Voltage regulator circuits are additions to basic power supply circuits which are made up of rectifier and filter sections. The purpose of the voltage regulator is to provide an output voltage with little or no variation. Regulator circuits sense changes in output voltages and compensate for the changes. Regulators that maintain voltages within plus or minus (±) 0.1% are quite common. The diagram in Figure 1 illustrates pictorially the purpose of the voltage regulator.

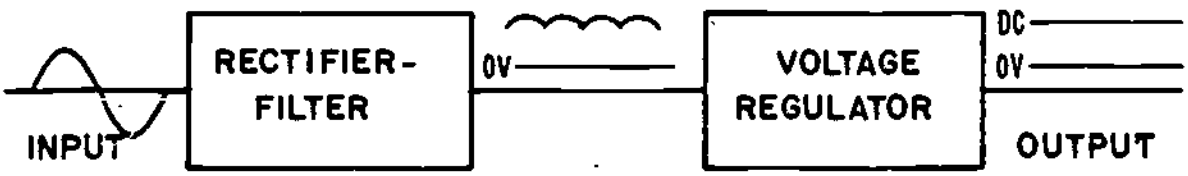


FIGURE I

The purpose of a voltage regulator is to provide an output voltage with little or no_____.

PROGRAMMED INSTRUCTION
LESSON 2

## Transistor Voltage and Current Regulators

TEST FRAMES ARE 6, 12, 17, 23, 29, 33, 38 AND 51. PROCEED TO TEST FRAME 6 AND SEE IF YOU CAN ANSWER THE QUESTION. FOLLOW THE DIRECTIONS GIVEN AFTER THE TEST FRAME.

1. You are already familiar with the methods used for increasing, decreasing and rectifying AC voltages. You know that most electronic equipments require DC voltages and that these voltages are provided through rectification of the AC input voltage. You remember that rectification may be accomplished by using either half-wave or full-wave rectifiers and that the advantage of using a full-wave rectifier is that less filtering is required because there is less ripple in the output.

The main advantage of a full-wave rectifier is that the amount of filtering required is:

a. increased

b. reduced

---

b. reduced

2. You know that the output of a power supply varies with changes in input voltage and circuit load current requirements. Because many military electronic equipments require operating voltages and currents which must remain constant, some form of regulation is necessary. This lesson explains how circuits maintain a

---

variation

4. In a previous lesson (lesson VI module 20) you learned that there are two basic types of voltage regulators. Voltage regulators are classified as series or shunt depending on the location, or position of the regulating element(s) in relation to the circuit load resistance.

The two basic types of voltage regulators are _____ and _____.

---

series, shunt or vice versa

5. Figure 2 illustrates the two basic types of voltage regulators. In actual practice the circuitry of regulating devices may be quite complex. The simplified drawings shown in Figure 2 are presented to emphasize that there are two basic types of voltage regulators. Broken lines have been used to highlight the differences between the series and shunt regulators.

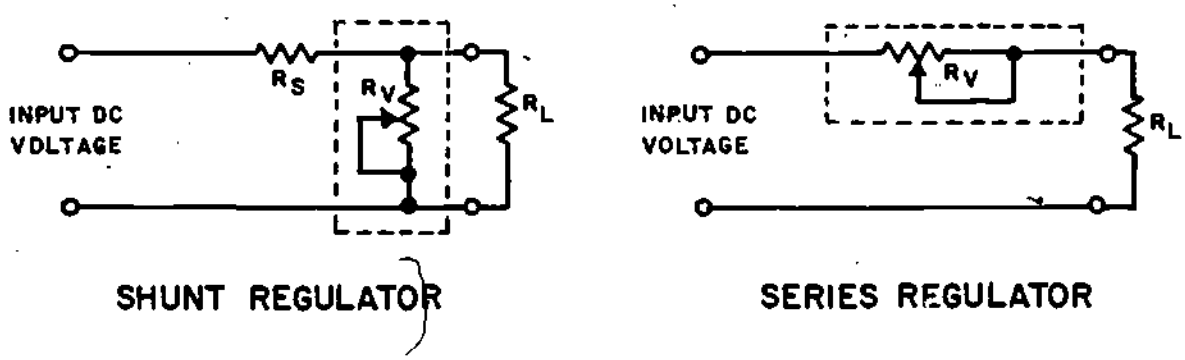


Figure 2

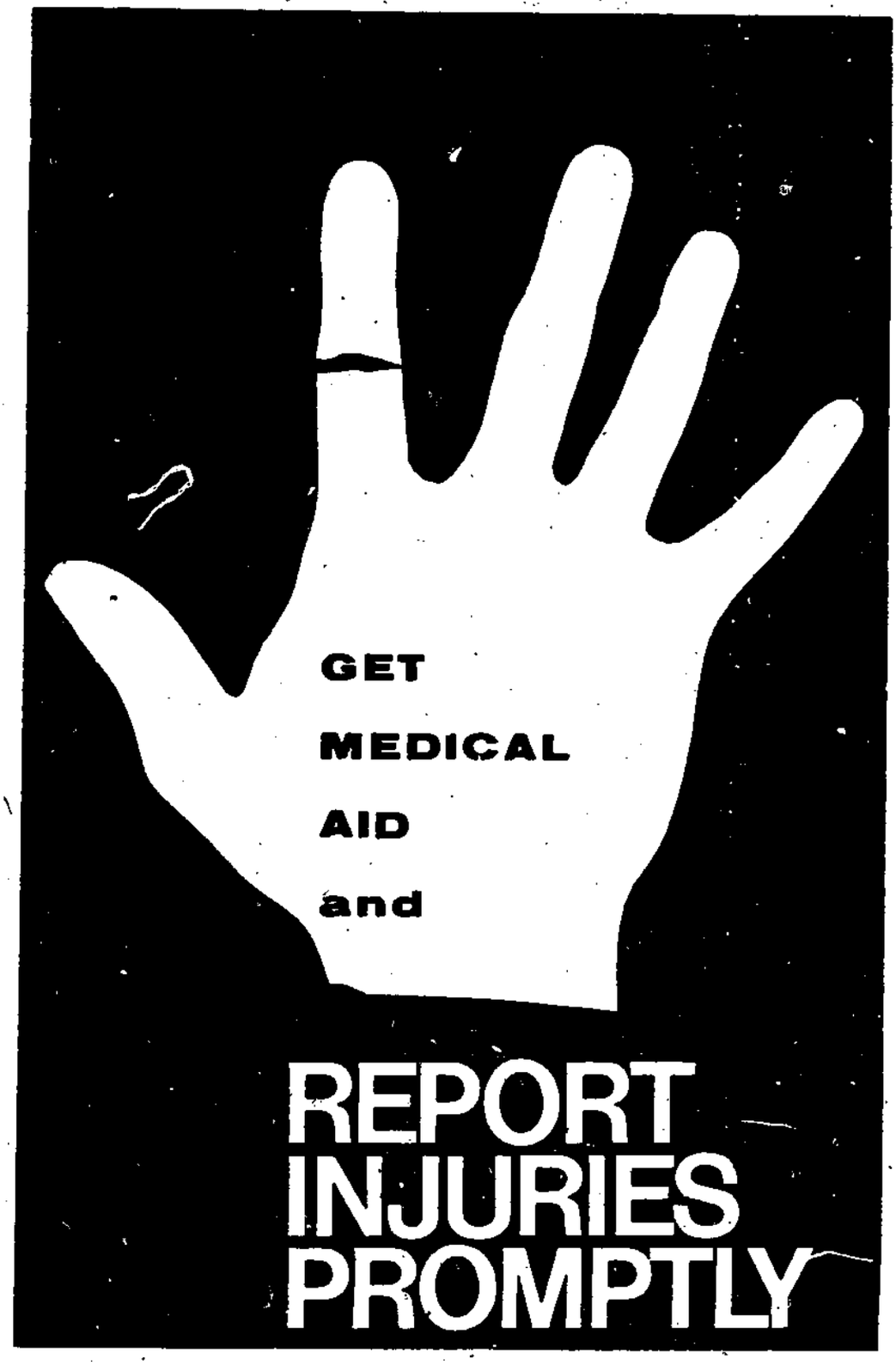
GET
MEDICAL
AID
and
REPORT
INJURIES
PROMPTLY

c. regulators

IF YOUR ANSWER MATCHES THE CORRECT ANSWER GO ON TO TEST FRAME 12.

IF YOUR ANSWER DOES NOT MATCH GO BACK TO FRAME 1 AND TAKE THE PROGRAMMED SEQUENCE BEFORE TAKING TEST FRAME 6 AGAIN.

7. Figure 3 illustrates the principle of series voltage regulation. As you study the figure notice that the regulator is in series with the load resistance and that all current passes through the regulator. In this example variable resistor Rv is used for regulation. Examine the circuit to determine how the regulator functions. When the input voltage increases this also causes the output voltage to increase. However, since the voltage regulator senses this change, the resistance of the regulating device Rv increases and results in a greater voltage drop across Rv. This causes the output voltage to decrease to normal, or for all practical purposes, to remain constant.

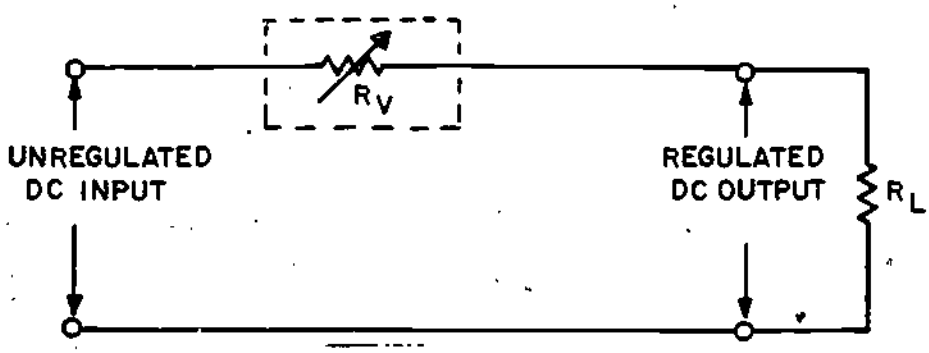


FIGURE 3
SERIES VOLTAGE REGULATOR

You have probably already concluded that as the input voltage decreases, the resistance of the variable resistor Rv decreases almost simultaneously, thereby compensating for the voltage drop.

66

The schematic on the left in Figure 2 is that of a shunt type regulator. It is called a shunt type regulator because the regulating device is connected in parallel with the load resistance. This is a characteristic of all shunt type regulators. The schematic on the right is that of a series regulator. It is called a series regulator because the regulating device is connected in series with the load resistance.

---

no response is required

6. THIS IS A TEST FRAME. AFTER YOU ANSWER THE QUESTION COMPARE YOUR ANSWER WITH THE ONE GIVEN ON THE TOP OF THE FOLLOWING PAGE.

1. Circuits which maintain a constant voltage or current output are called_____.

a. filters

b. controllers

c. regulators

d. transformers

9. The diagram in Figure 4 represents a shunt type voltage regulator. Notice that variable resistor Rv is in parallel with the load resistance RL and that fixed resistor Rs is in series with the load resistance. You already know the voltage drop across a fixed resistor remains constant unless there is a variation, increase or decrease, in the current through it.

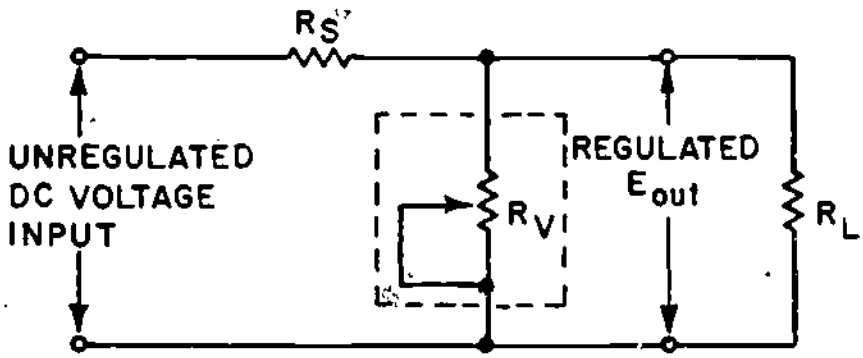


FIGURE 4
SHUNT VOLTAGE REGULATOR

Recall that one of the characteristics of the shunt type regulator is that the regulation device is connected in parallel with the load resistance. In this case the regulation device is represented by the variable resistor Rv. Now consider how the regulating device maintains the output voltage constant.

With a constant input voltage, the output voltage remains constant only as long as the parallel resistance of Rv and $R_L$ remains constant. You can readily see that changes in the load (current) must be compensated for by changes in the resistance of the regulating device Rv. When the load (current) increases the resistance of the regulating device, resistor Rv, must be increased to compensate for the increased load through $R_L$.

Since there is a smaller voltage drop across Rv, the output voltage remains almost constant. Voltage fluctuations within the circuit occur in microseconds and are not observable on test equipment.

When a series voltage regulator is used to control output voltages, any increase in the input voltage results in a/an increase/decrease in the resistance of the regulating device, Rv.

---

increase

8. Recall that there are two types of voltage regulators, series and shunt. You have already learned how series regulators operate and therefore the next several frames are concerned with explaining how a shunt regulator functions. The basic difference between a series and shunt regulator is that the shunt regulator is connected in parallel with the load resistance.

A shunt type voltage regulator is connected in series/parallel with the load resistance.

---

parallel

continuously and automatically to regulate the output voltage without external manipulation is required. One such voltage regulating device is a Zener diode regulator.

---

no response required

(12.) THIS IS A TEST FRAME. AFTER YOU ANSWER THE QUESTIONS COMPARE YOUR ANSWERS WITH THE ONES GIVEN ON THE TOP OF THE PAGE FOLLOWING THE QUESTIONS.

1. When a series voltage regulator is used to control output voltages, a decrease in the input voltage results in a/an increase/decrease in the resistance of the regulating device, Rv.

2. The two basic types of voltage regulators are_____ and _____.

3. A_____type voltage regulator is connected in parallel with the output load resistance.

4. One type of voltage regulator which operates continuously and automatically is a _____diode regulator.

---

The voltage regulator, Rv compensates for decreases in the load (current) by increasing/decreasing its resistance.

---

decreasing

10. Again refer to the schematic shown in Figure 4 and consider how the voltage regulator operates to compensate for changes in input voltages. You know, of course, that the input voltage may vary and that any variation must be compensated for by the regulating device. Consider an increase in input voltage. When this happens the resistance of Rv automatically decreases to maintain the correct voltage division. If you have concluded that the regulator operates in the opposite way to compensate for a decrease in input voltage you are correct.

The resistance of voltage regulator Rv, increases/decreases to compensate for any decrease in input voltage.

---

increases

11. So far the operation of voltage regulators that use variable resistors have been explained. You have probably already concluded that this type of regulation has limitations. Obviously, the variable resistor cannot be adjusted rapidly enough to compensate for frequent fluctuations in voltages. Since input voltages fluctuate frequently and rapidly the variable resistor is not a practical method for voltage regulation. A voltage regulator that operates

1. decrease
2. series/shunt or vice versa
3. shunt
4. Zener

IF YOUR ANSWERS MATCH THE CORRECT ANSWERS GO ON TO TEST FRAME 17.

IF YOUR ANSWERS DO NOT MATCH GO BACK TO FRAME 7 AND TAKE THE PROGRAMMED SEQUENCE BEFORE TAKING TEST FRAME 12 AGAIN.

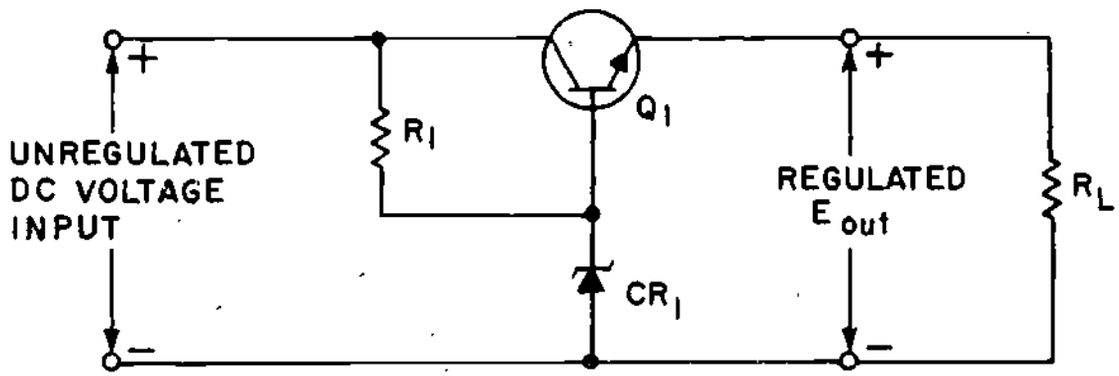


FIGURE 5
SERIES VOLTAGE REGULATOR

13. The schematic for a typical series voltage regulator is shown in Figure 5. Notice particularly that the variable resistor has been replaced with Q1. The load passes through this transistor which is the reason it is sometimes called a "pass transistor." Other components which make up the circuit are the current limiting resistor R1 and the Zener diode CR1.

Recall that a Zener diode is a diode which blocks current until a specified voltage is applied. Remember also that this is called the breakdown or Zener voltage and that when the Zener voltage is


THE BEST SAFETY DEVICE IS BETWEEN YOUR EARS

(14.) Now study Figure 6. Notice that voltages are shown to help you understand how the regulator operates.

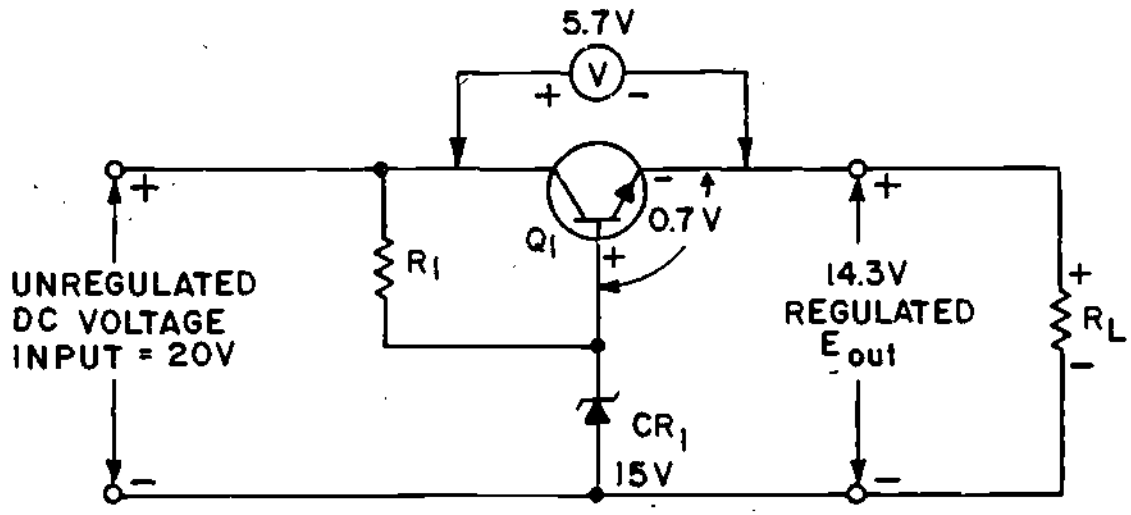


FIGURE 6
SERIES VOLTAGE REGULATOR

In the example the Zener used is a 15 volt Zener. Recall that a Zener diode blocks current flow until such time as the applied voltage reaches the breakdown or Zener voltage. In this instance, the Zener or breakdown voltage is 15 volts. The Zener establishes the value of the base voltage for Q1. The output voltage will equal the Zener voltage minus a 0.7 volt drop across the forward biased base-emitter junction of Q1, or 14.3 volts. Because the output voltage is 14.3 volts, the voltage drop across Q1 must be 5.7 volts.

With an input voltage of 20 volts and a required output voltage of 14.3 volts the voltage drop across Q1 is _____volts.

---

5.7 volts

reached, the Zener diode conducts from its anode to its cathode (with the arrow!!!). Also, recall that Zener diodes are available with different Zener voltages. Now examine the circuit in detail to see how the various circuit components function. In this case, Q1 has a constant voltage applied to its base. This voltage is often called the reference voltage. As changes in the circuit output voltage occur, they are sensed at the emitter of Q1, producing a corresponding change in the transistor's forward bias. In other words, Q1 compensates by increasing or decreasing its resistance in order to change the circuit voltage division. Refer to Figure 5 in order to answer the following question.

The purpose of Q1 is to_____changes in output voltages and convert this voltage change into the proper transistor_____.

---

sense, resistance

(16.) Figure 8 is a schematic diagram for the same series voltage regulator with one significant difference. Notice that the output voltage is shown as 14.2 volts in lieu of the desired 14.3 volts.

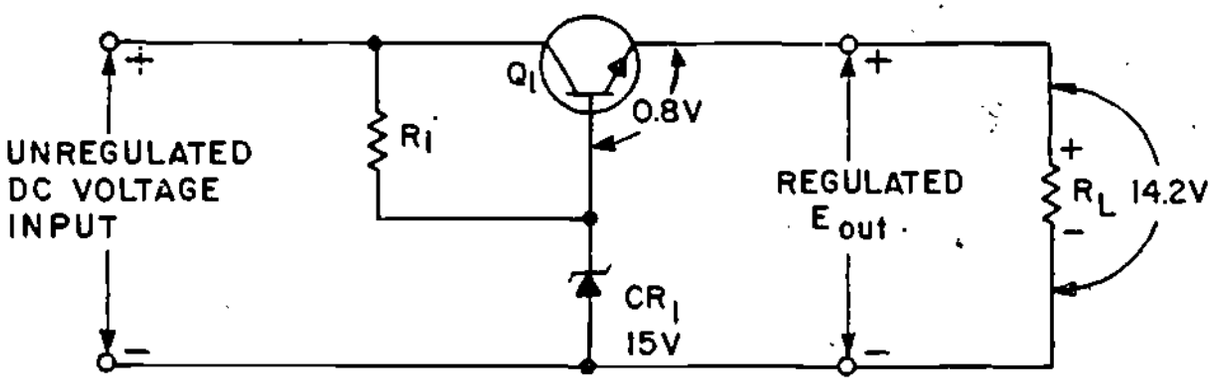


FIGURE 8
SERIES VOLTAGE REGULATOR

In this case, the load has increased causing a greater voltage drop across Q1, thereby reducing the voltage drop across $R_L$ to 14.2 volts. When the output decreases the forward bias of Q1 increases to 0.8 volts because Zener diode CR1 maintains Q1's base voltage at 15 volts. Note that this is the difference between the Zener reference voltage of 15 volts and the momentary output voltage. (15-14.2=0.8). At this time, the larger forward bias on Q1 causes the resistance of Q1 to decrease, thereby causing the voltage drop across Q1 to return to 5.7 volts. This then causes the output voltage to return to 14.3 volts.

When the forward bias across Q1 increases, the resistance of Q1 increases/decreases.

---

decreases

(15.) Study Figure 7 in order to understand what happens when the input voltage exceeds 20 volts.

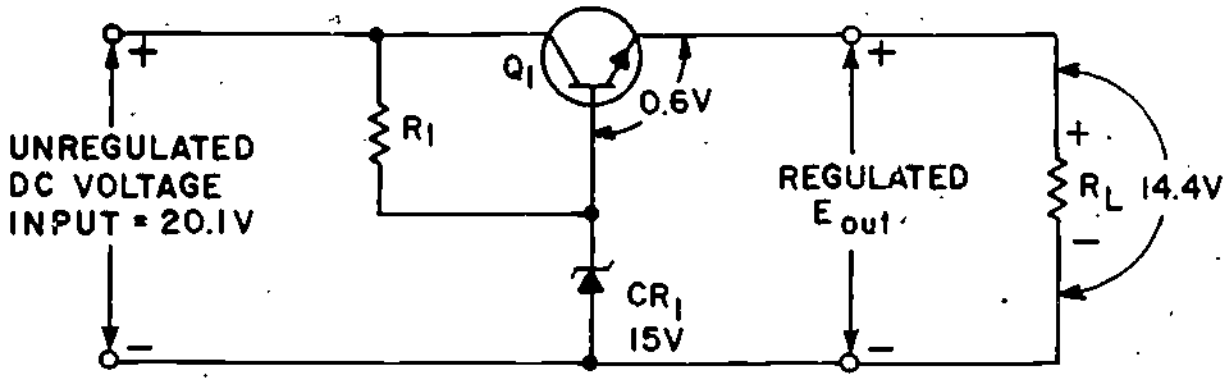


FIGURE 7
SERIES VOLTAGE REGULATOR

Notice particularly the input and output voltages of 20.1 and 14.4 volts respectively. The 14.4 output voltage is a momentary deviation or variation, from the required regulated output voltage of 14.3, and is the result of a rise in the input voltage to 20.1 volts.
Since the base voltage of Q1 is held at 15 volts by CR1, the forward bias of Q1 changes to 0.6 volts. Because this bias voltage is less than the normal 0.7 volt, the resistance of Q1 increases thereby increasing the voltage drop across the transistor to 5.8 volts. This restores the output voltage to 14.3 volts. The entire cycle takes only a fraction of a second and therefore the change is not visible on an oscilloscope or readily measurable with other standard test equipment.

When the forward bias voltage of Q1 decreases, there is a corresponding increase/decrease in the resistance of the Q1.

---

increase

1. Q1
2. 0.6 volts
3. 5.6 volts
4. decrease

IF YOUR ANSWERS MATCH THE CORRECT ANSWERS GO ON TO TEST FRAME 23.

IF YOUR ANSWERS DO NOT MATCH GO BACK TO FRAME 13 AND TAKE THE PROGRAMMED SEQUENCE BEFORE TAKING TEST FRAME 17 AGAIN.

18. Study the schematic shown in Figure 10. Notice that a potentiometer is included as part of the circuit.

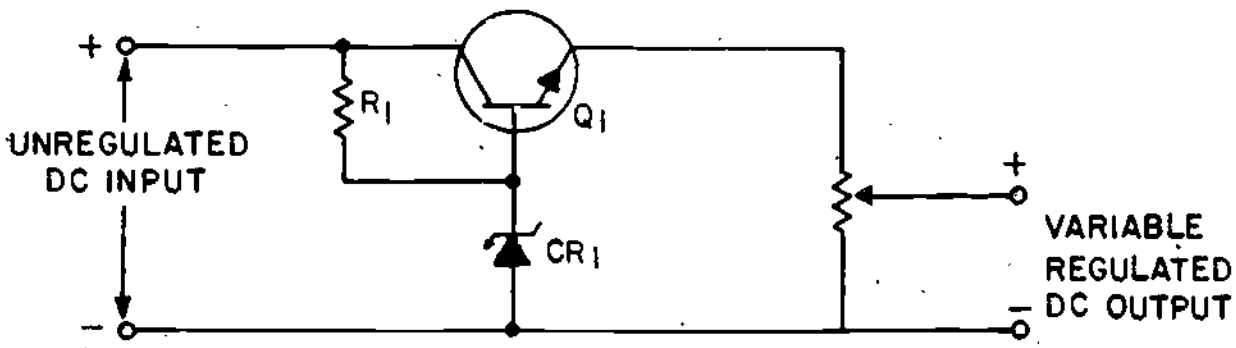


FIGURE 10

The potentiometer has been included in order to illustrate how the output voltage may be varied from zero to the full value of the voltage regulators output. Later frames in this instruction will cover this in more detail.

---

no response required

(17.) THIS IS A TEST FRAME. AFTER YOU ANSWER THE QUESTIONS COMPARE YOUR ANSWERS WITH THE ONES GIVEN ON THE TOP OF THE PAGE FOLLOWING THE QUESTIONS

Refer to the schematic shown in Figure 9 when answering the questions in this test frame.

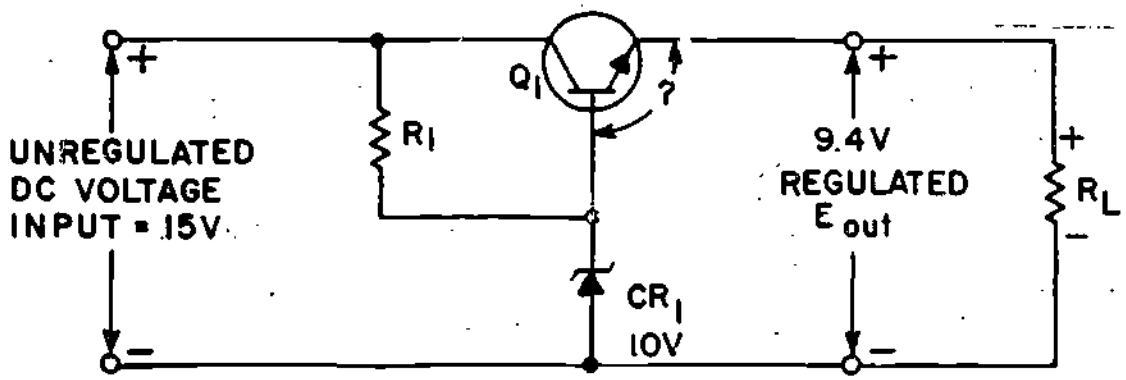


FIGURE 9

1. The component which senses changes in output voltages in Figure 9 is_____.

2. What is the base-emitter voltage for Q1?_____ $V_{BE}$

3. Based on the input and output voltages shown, what is the voltage drop across Q1?_____ volts

4. When the forward bias of Q1 increases, there is a corresponding increase/decrease in the resistance of Q1.

(20.) Figure 12 is the schematic for a typical shunt type regulator. Notice that the schematic is identical with the schematic shown in Figure 11 except that voltages are shown to help you understand the function of the various components.

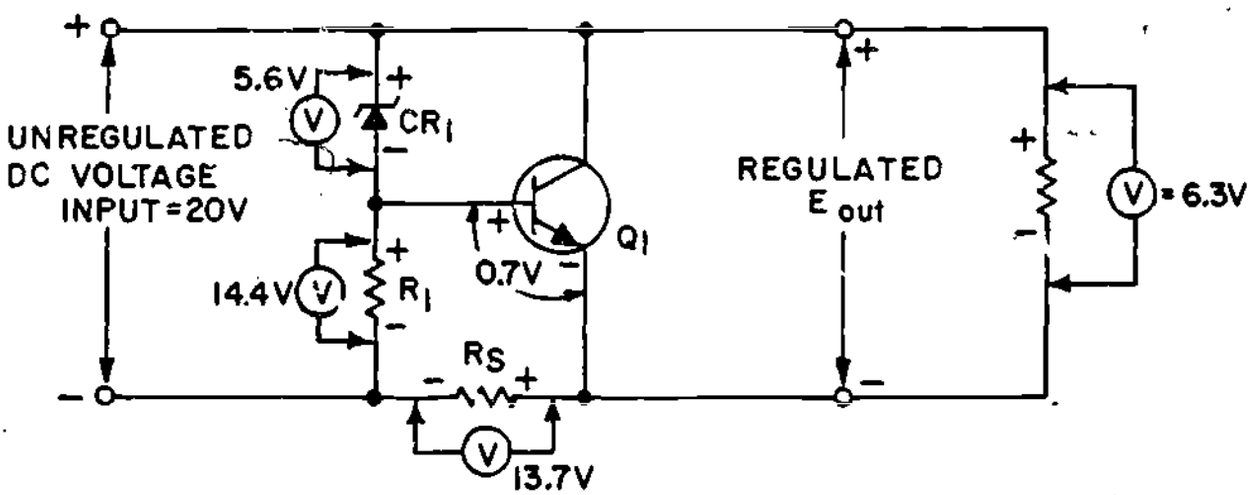


FIGURE 12
SHUNT VOLTAGE REGULATOR

In the circuit shown the voltage drop across the Zener diode CR1 remains constant at 5.6 volts. This means that with a 20 volt input voltage the voltage drop across R1 is 14.4 volts. With a base-emitter voltage of 0.7 volts, the output voltage is equal to the sum of the voltages across the Zener diode CR1 and the voltage at the base-emitter junction of Q1. In this example, with an output voltage of 6.3 volts and a 20 volt input voltage, the voltage drop across Rs equals 13.7 volts. Study the schematic in order to fully understand how these voltages are developed and pay close attention to the voltages shown.

---

No response required

(19.) The schematic shown in Figure 11 is that of a shunt voltage regulator.

NOTE: Q1 is in parallel with the load.

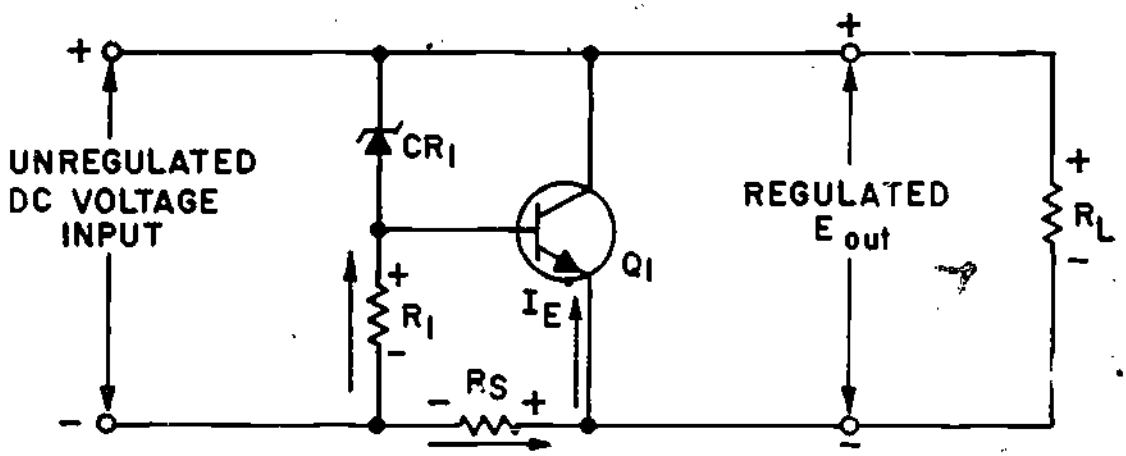


FIGURE 11
SHUNT VOLTAGE REGULATOR

Components of this circuit are identical with those of the Series Voltage Regulator except for the addition of fixed resistor Rs. When you study the schematic you see that this resistor is connected in series with the output load. The current limiting resistor R1 and Zener diode CR1, provide a constant reference voltage for the base-collector junction of Q1. Notice that the bias of Q1 is determined by the voltage drop across Rs and R1. As you know, the amount of forward bias across a transistor affects its total resistance. In this case, the voltage drop across resistor Rs is the key to the total circuit operation.

The voltage drop across resistors Rs and R1 determines the amount of base-emitter _____ for Q1.

---

bias

(22.) Study the schematic shown in Figure 14. Although the schematic is identical with other shunt voltage schematics previously illustrated and discussed, the output voltage shown is different. The load current has increased causing a momentary drop in voltage output to 6.2 volts. Recall that the circuit was designed to insure a constant output voltage of 6.3 volts. Since the output voltage is less than required, changes occur in the regulator to restore the output voltage to 6.3 volts.

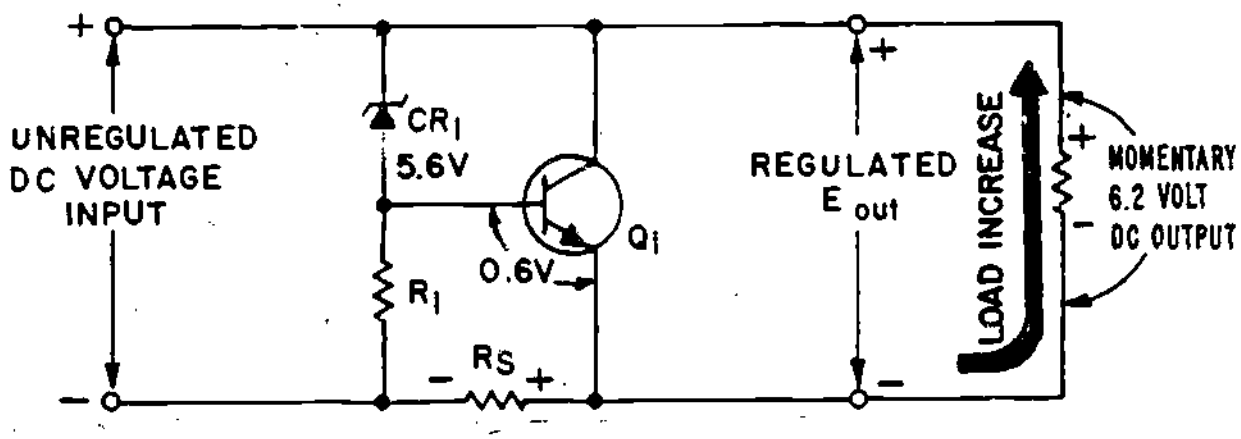


FIGURE 14
SHUNT VOLTAGE REGULATOR

Because of the 0.1 volt drop in the output voltage the forward bias of Q1 is now 0.6 volt. This decrease in the forward bias increases the transistor's resistance, thereby reducing the current flow through Q1 by the same amount that the load current increased. The current flow through Rs returns to its normal value and restores the output voltage to 6.3 volts.

When the load current increases and the output voltage momentarily drops, the resistance of Q1 increases/decreases to compensate.

---

increases

(21.) Refer to Figure 13. This figure shows the schematic diagram of the same shunt voltage regulator with an increased input voltage of 20.1 volts.

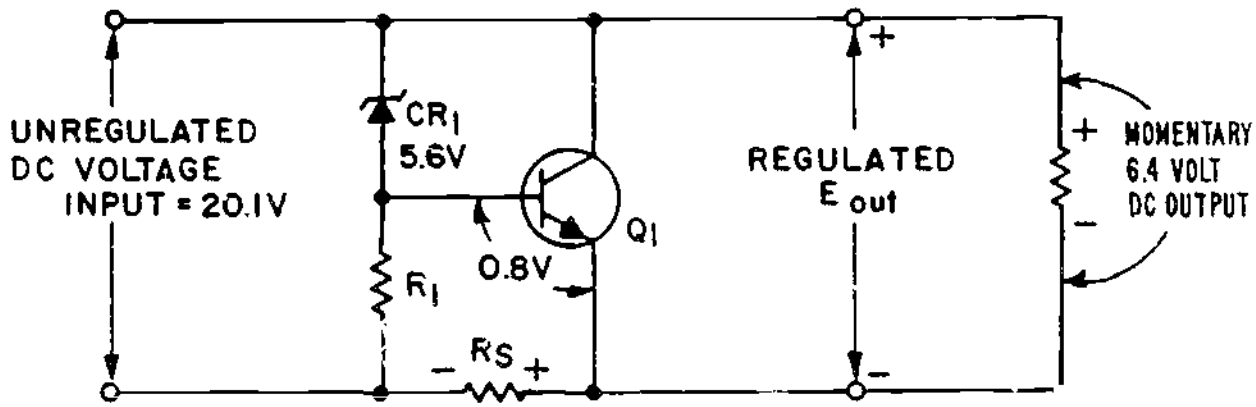


FIGURE 13
SHUNT VOLTAGE REGULATOR

This increases the forward bias on Q1 to 0.8 volts. Recall that the voltage drop across the Zener diode CR1 remains constant at 5.6 volts. Since the output voltage is comprised of the Zener voltage and the base-emitter voltage, the output voltage momentarily increases to 6.4 volts. At this time the increase in Q1's forward bias lowers the transistor's resistance allowing more current to flow through it. Since this current must also pass through Rs, there is also an increase in the voltage drop across this resistor. The voltage drop across Rs is now 13.8 volts and therefore, the output voltage is reduced to 6.3 volts. Remember that this change takes place in a fraction of a second.

When there is an increase in the input voltage of the shunt voltage regulator shown in Figure 13 the forward bias of Q1 increases/decreases.

---

Increases

1. 0.7
2. 5.7
3. 5
4. increase, decrease
5. decreasing

IF YOUR ANSWERS MATCH THE CORRECT ANSWERS, YOU MAY PROCEED TO TEST FRAME 29, OTHERWISE GO BACK TO FRAME 18 AND TAKE THE PROGRAMMED SEQUENCE BEFORE TAKING TEST FRAME 23 AGAIN.

---

(24.) Refer to the shunt voltage regulator schematic in Figure 16. Notice particularly that a potentiometer has been incorporated into the circuit. The pot is designated as R2.

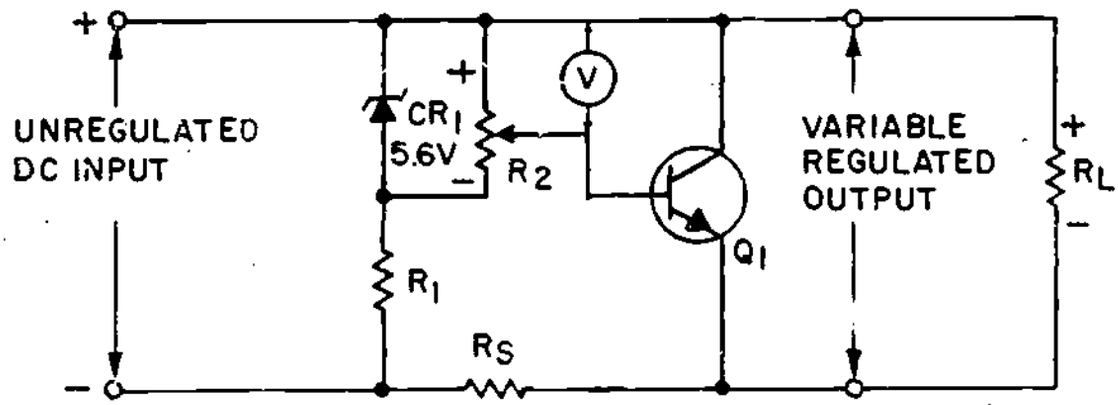


FIGURE 16
VARIABLE SHUNT VOLTAGE REGULATOR

Addition of the potentiometer provides a capability for a variable regulated DC output. Notice that the 5.6 volt drop across the potentiometer is equal to the voltage drop of the Zener diode CR1. The nominal voltage across the base-emitter junction is about 0.7 volts. The total output is the sum of the voltage across the base-emitter junction of Q1 plus the regulated voltage at the wiper of R2.

(23.) THIS IS A TEST FRAME. STUDY THE SCHEMATIC IN FIGURE 15 IN ORDER TO ANSWER THE TEST QUESTIONS. AFTER YOU ANSWER THE TEST QUESTIONS COMPARE YOUR ANSWERS WITH THE CORRECT ANSWERS GIVEN ON THE TOP OF THE PAGE FOLLOWING THE QUESTIONS.

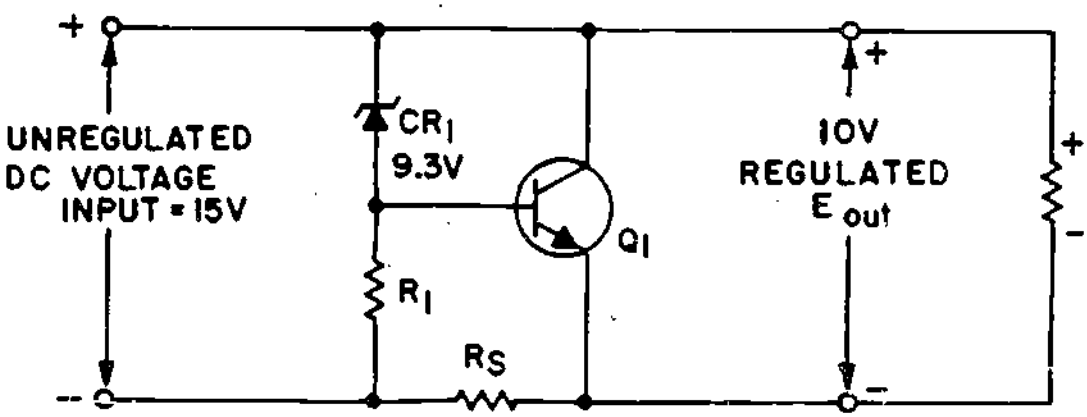


FIGURE 15
SHUNT VOLTAGE REGULATOR

1. The voltage across the base-emitter junction of Q1 is_____ volt(s).

2. The voltage across R1 is _____volt(s).

3. The voltage drop across Rs is _____volt(s).

4. When the input voltage increases, the forward bias on the base-emitter junction of Q1 will (increase/decrease) _____causing Q1 to (increase/decrease)_____its resistance.

5. When the load current decreases, Q1 compensates by_____ (increasing/decreasing) its resistance.

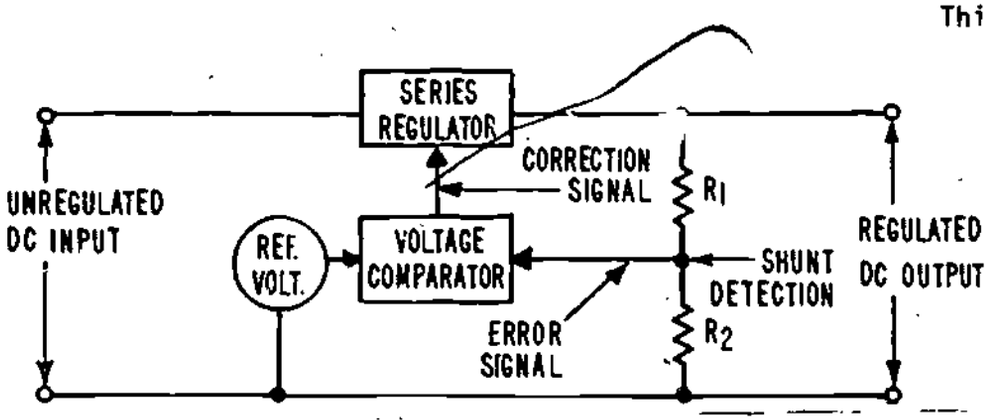


FIGURE 17

of the regulator is detected at the junction of the two resistors. A change in the regulated output is referred to as the "error signal". This signal, or input, is applied to the voltage comparator. Examine the diagram and note that the voltage comparator h another input. This input is called the reference voltage. The reference voltage remains constant. The function of the comparator is to compare the error signal with the reference voltage ar ed on the difference, develop an output voltage called the correc on signal. When this signal is fed to the series regulating device which is usually a transistor, the resistance of the transistor changes to compensate for any increase or decrease in output voltage.

The electronic circuit which compares the "error signal" with a reference voltage is called a

a. series regulator

b. voltage doubler

c. shunt regulator

d. voltage comparator

---

d. voltage comparator

When the voltmeter connected to the wiper arm of R7 is 4.5 volts, the output voltage is _____ volts.

---

5.2 volts

(25.) You have now learned how basic series and shunt transistor voltage regulators work and may have wondered how the regulation could be improved. Methods for improving the regulation are explained in frames which follow.

The basic electronic circuit which makes better voltage regulation possible is called a "voltage comparator". The diagram shown in Figure 17 illustrates pictorially how this circuit relates to the other regulator circuits.

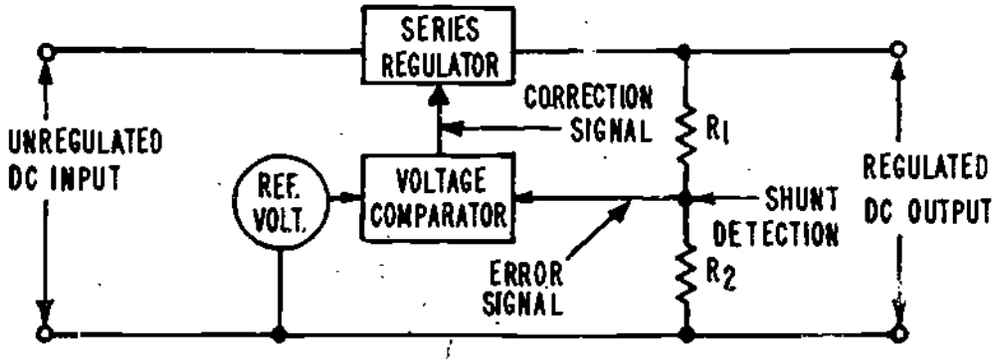


FIGURE 17
SHUNT DETECTED SERIES REGULATOR

When you examine Figure 17 notice that a voltage divider is connected in shunt, or parallel, with the output of the voltage regulator. This divider is comprised of R1 and R2. The regulator shown is called a <u>shunt detected</u> series regulator. Any change in the output voltage

with the values given the circuit has no output. Any change in the source voltage of either transistor affects the other transistor a like amount and voltages are cancelled out. Characteristics of this circuit are high stability and sensitivity.

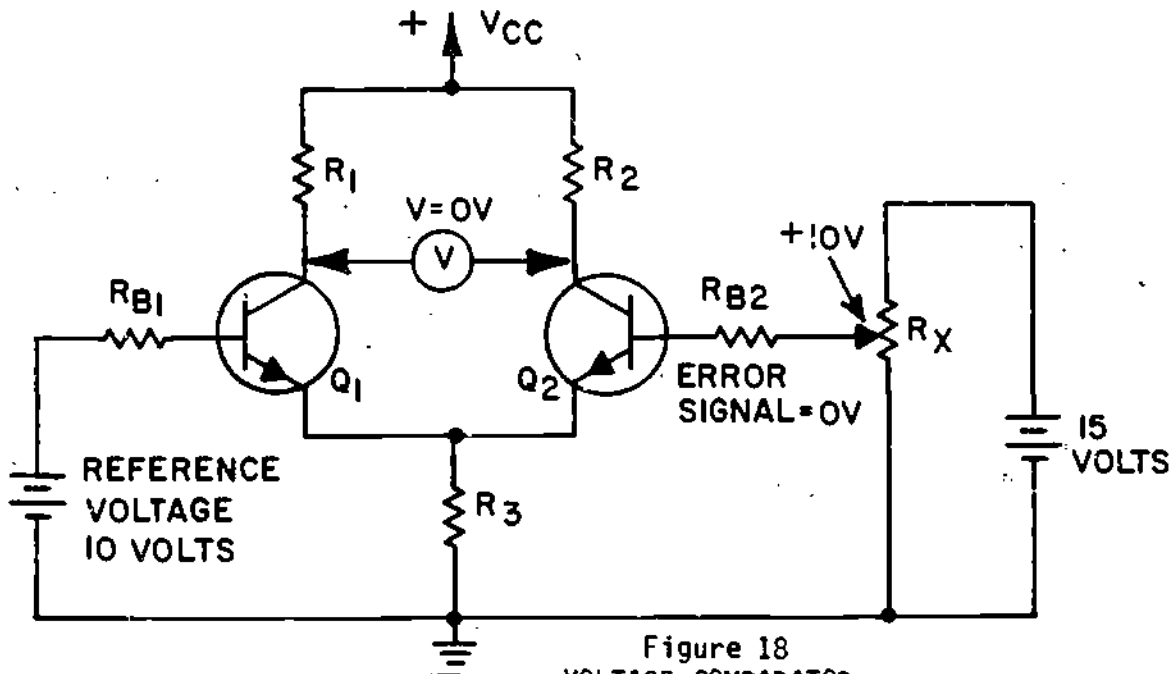


Figure 18
VOLTAGE COMPARATOR

The voltage comparator shown in Figure 18 is often called a _____ amplifier

differential

(27.) You now have a basic understanding of how a voltage comparator works. To give you a better understanding, the next several frames include information as to what actually happens when t error voltage is different than the reference voltage. Assume that the comparator error voltage increases to 11 volts as shown in Figure 19. This positive error signal of 1 volt causes an increase in the forward bias of Q2, thereby causing additional current to flow through collector load resistor R2. This causes the collector voltage of Q2 to decrease.

(26.) The schematic shown in Figure 18 is a voltage comparator circuit that is part of a shunt detected series voltage regulator.

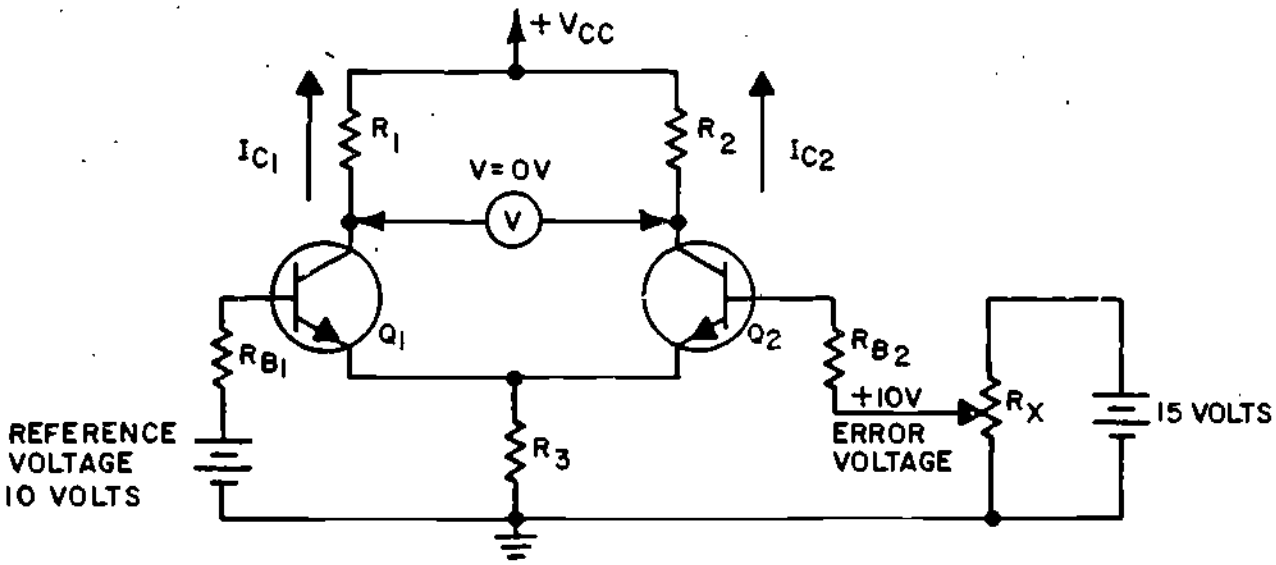


FIGURE 18
VOLTAGE COMPARATOR

Notice that identical transistors and collector load resistors are used with a common emitter resistor in order to form the balanced circuit. The circuit shown is often called a differential amplifier, since it amplifies the difference between the input signals. Look at Q1 and note that a reference voltage of 10 volts is applied to the base of the transistor. An identical potential is applied to the base of Q2. This voltage is the result of using the potentiometer Rx to select a value which is equal to the reference voltage. The error signal equals the <u>difference</u> between the reference and error voltage. A voltmeter connected across the two transistor collectors, as shown in Figure 18, results in a voltage reading of zero volts. This means that

(28.) Figure 20 shows the same schematic with the error voltage reduced to 9 volts, producing a negative 1 volt error signal. Since this voltage is one volt less than the 10 volt reference voltage, the current through Q2 decreases at the same time the current through Q1 increases. Study the schematic to make sure you understand how the voltages offset and produce a positive correction signal from the collector of Q2.

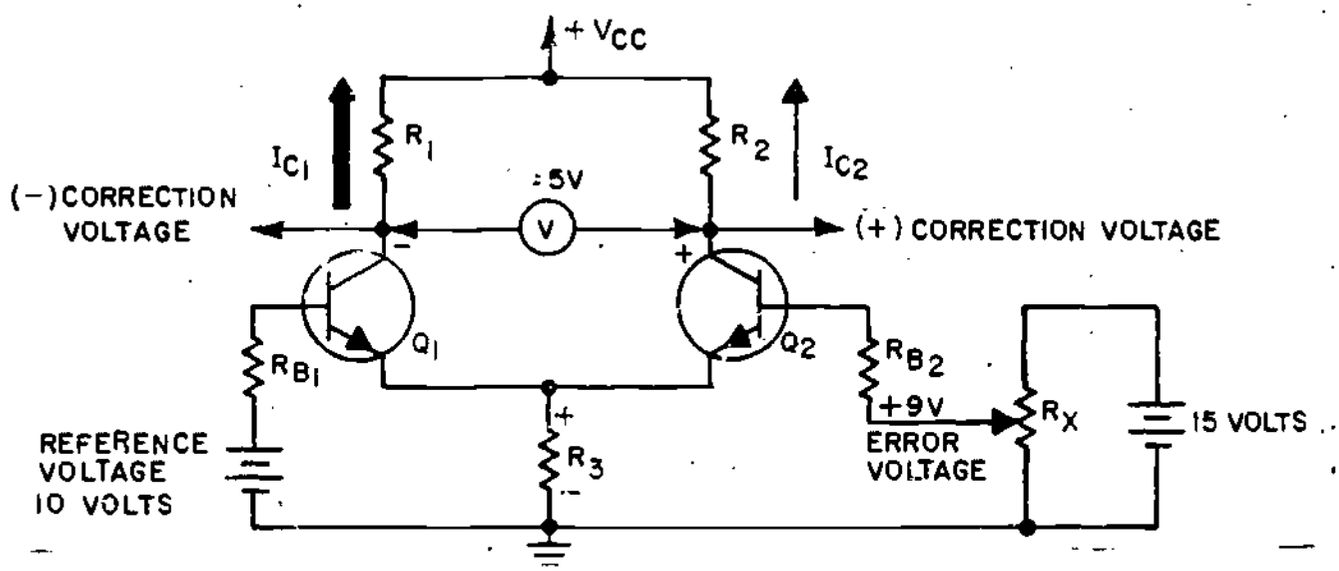


FIGURE 20
VOLTAGE COMPARATOR

---

No response required

(29.) THIS IS A TEST FRAME. STUDY THE SCHEMATIC IN FIGURE 21 IN ORDER TO ANSWER THE TEST QUESTIONS. AFTER YOU ANSWER THE QUESTIONS COMPARE YOUR ANSWERS WITH THE CORRECT ANSWERS GIVEN ON THE TOP OF THE PAGE FOLLOWING THE QUESTIONS.

At the same time, the increased current through R3 produces a decrease in the forward bias of Q1. This occurs because the top of R3 becomes more positive.

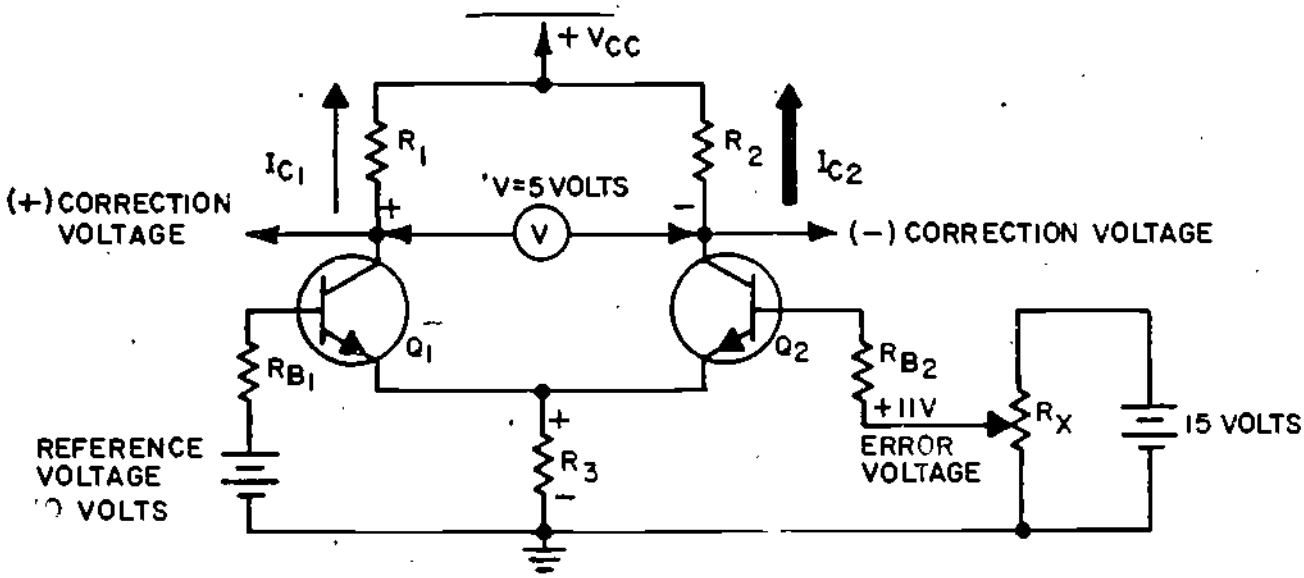


FIGURE 19
VOLTAGE COMPARATOR

The smaller forward bias on Q1 decreases the collector current and results in a corresponding increase in the collector voltage of Q1. The collector correction voltages of Q1 and Q2 are out-of-phase; the increase in the collector voltage of Q1 is offset by a corresponding decrease in the collector voltage of Q2. This is shown by the 5 volt reading on the voltmeter. The output from Q2's collector would be a negative 2.5 volt correction signal.

An increase in the collector voltage of one of the transistors shown in Figure 19 indicates a corresponding increase/decrease in the collector voltage of the other transistor.

---

decrease

1. voltage comparator
2. equal, out-of-phase
3. b. decreases
4. increase

IF YOUR ANSWERS AGREE WITH THE CORRECT ANSWERS YOU MAY PROCEED TO TEST FRAME 33, OTHERWISE GO BACK TO FRAME 24 AND TAKE THE PROGRAMMED SEQUENCE BEFORE TAKING TEST FRAME 29 AGAIN.

30. You now understand how [illegible] Refer to Figure 22 and notice that a series regulator, Q3, and two additional resistors have been added to the circuitry. These components complete a regulator circuit which uses the output of the voltage comparator.

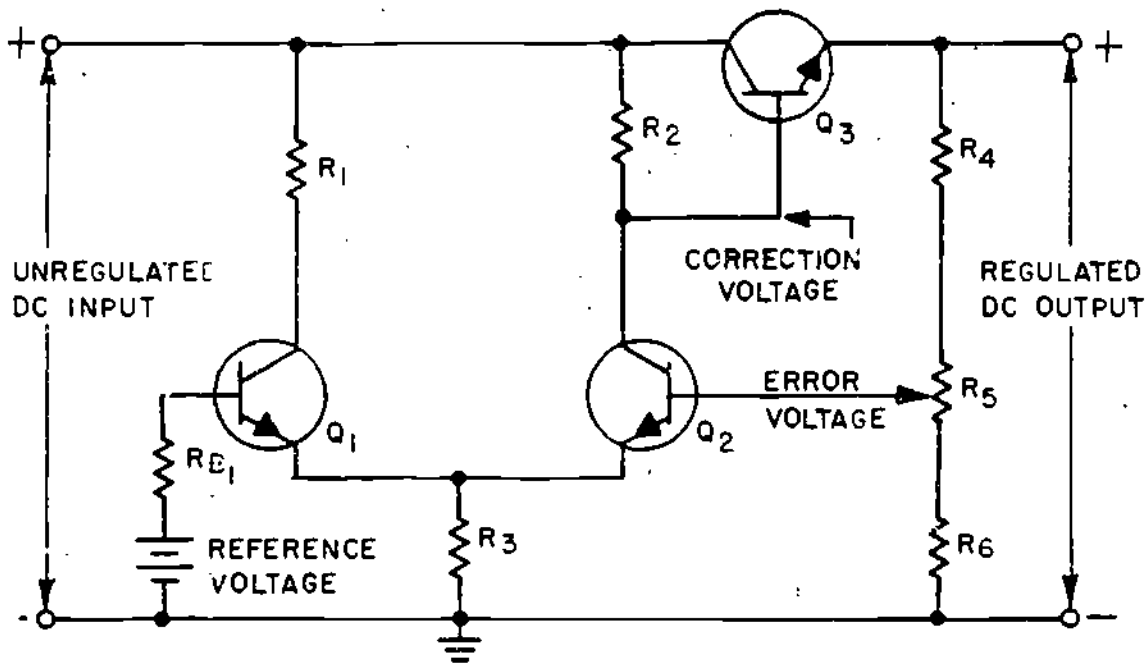


FIGURE 22
SHUNT DETECTED SERIES REGULATOR

Recall that when the load increases there is a momentary, or temporary, decrease in the output voltage. Study the schematic and notice that a decrease in output voltage is sensed at the wiper arm of potentiometer

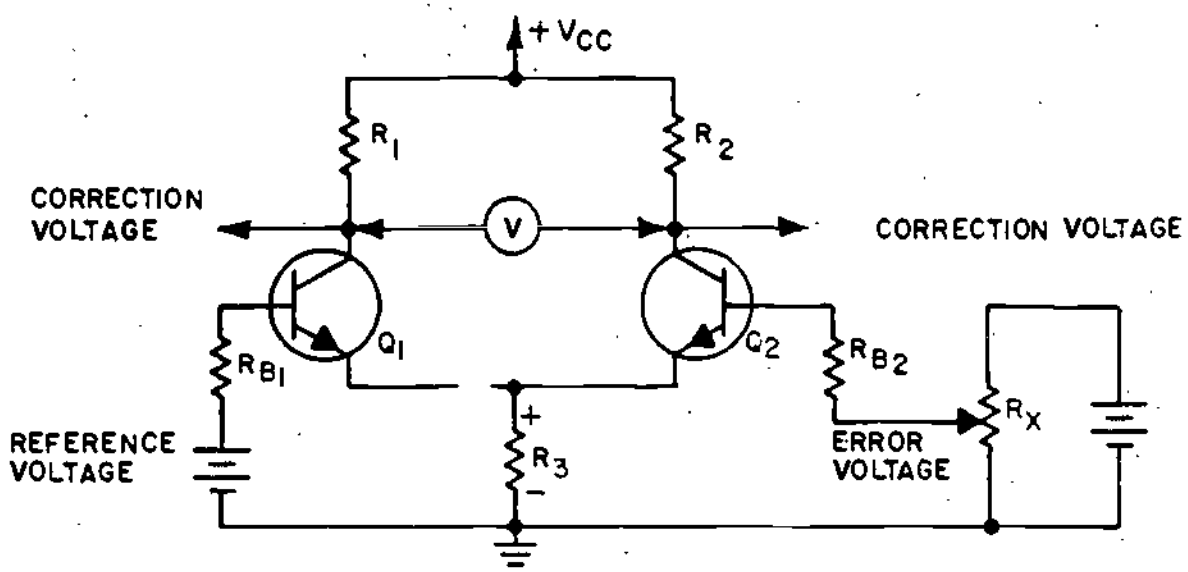


FIGURE 21
VOLTAGE COMPARATOR

1. The electronic circuit which makes better voltage regulation possible is called a:

   a. series regulator

   b. voltage multiplie

   c. shunt regulator

   d. voltage comparator

2. A Differential Amplifier produces output signals that are_____ (equal/unequal) and_____(in-phase/out-of-phase) with each other.

3. When a positive error signal is produced, the collector voltage of Q2_____.

   a. stay same

   b. decreases

   c. increases

4. A negative error signal results in a/an increase/decrease in the current flow through Q1.

(31.) The schematic in Figure 23 is that of a Darlington amplifier. This type of amplifier has several distinct advantages. The main advantages of the Darlington amplifier circuit are the high input impedance and high current gain. This circuit is found in many regulated power supplies.

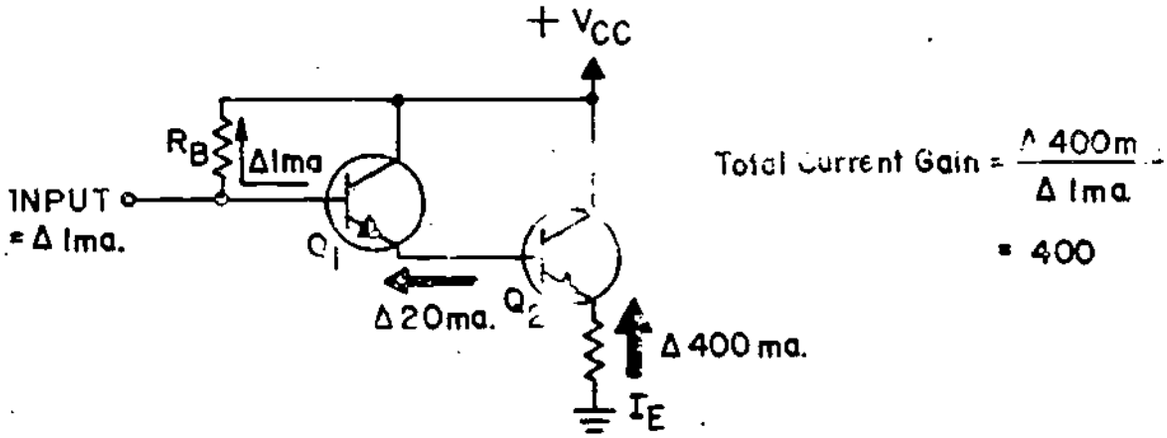


FIGURE 23
DARLINGTON AMPLIFIER

As you study the schematic for this circuit, note the symbol Δ ; a Greek alphabet letter used to denote in this case "a small change of." This is merely a shorthand technique in electronics that saves a lot of [illegible]ing.

Study the schematic and notice that the emitter of Q1 is connected directly to the base of Q2. The emitter output current of Q1 is therefore the base current of Q2. This type of circuitry results in a current gain which is equal to the <u>product</u> of the individual current gains.

Since each of the transistors has a current gain of 20 the total current gain equals [illegible]. Because Q1 has a gain of 20, a 1 milliampere base input current change results in an output current change of 20 milliamperes at the emitter. Application of this 20 milliampere change

R5 as a negative error signal. This error signal (less positive voltage) is felt at the base of Q2, causing an increase in the voltage on the collector of Q2 (collector out-of-phase with base). When this more positive voltage is applied to the base of Q3, its forward bias is increased, thereby decreasing the resistance of the Q3. This results in a smaller voltage drop across the transistor, and the output voltage of the regulator returns to normal. Remember that these changes take place in microseconds. In the event the output voltage increases, the error and correction signal polarities would be reversed. The purpose of the voltage comparator in this circuit (Figure 22) is to provide a high degree of sensitivity to signal change, thereby eliminating changes, or drift, in the output voltage.

A negative error signal will cause a/an_____in the forward bias of Q3 and a corresponding_____ in the transistor's resistance.

a. decrease, increase

b. increase, decrease

c. decrease, decrease

d. increase, increase

---

increase, decrease

(32.) You are now familiar with voltage regulators, voltage comparators, and the Darlington type amplifier. Since you understand how these circuits operate independently it is easy to understand how they are combined to regulate voltages.

The schematic shown in Figure 24 is that of a Shunt Detected Series Regulator which uses both a voltage comparator and a Darlington amplifier. As you study the schematic notice that components which make up the Darlington amplifier are enclosed with broken lines. Note particularly that Q3 and Q4 make up the Darlington amplifier and that the emitter output of Q4 is applied to the base of Q3. Recall how this results in a high current gain. The total current gain of course, depends on the individual current gain of the two transistors

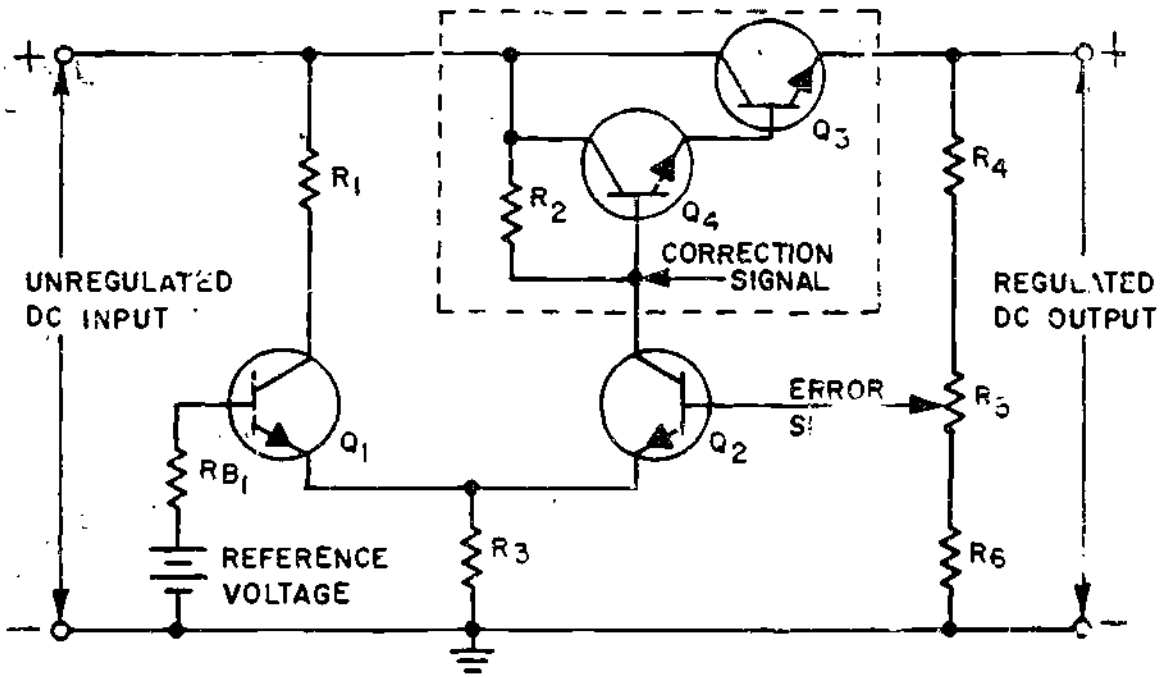


FIGURE 24
SHUNT DETECTED SERIES REGULATOR USING VOLTAGE COMPARATOR AND DARLINGTON AMPLIFIER

to the base of Q2 results in an output change of 400 milliamperes at the Q2 emitter.

Do not let the term "current gain" confuse you. Transistor current gain and voltage gain are commonly used in electronic circuit discussions. Voltage gain, as you remember, is the ratio of output voltage to the input voltage, or $A_v = \frac{E_o}{E_{in}}$. Current gain is similar in that it refers to output current compared to input current or, $A_i = \frac{I_o}{I_{in}}$. As you can see, the two terms are very similar, one for voltage amplification, and the other for current amplification. Combining two transistors in this way results in a significant current gain with a direct application in controlling the output of power supplies.

Given the circuit shown in Figure 23, what is the output current change of Q2 assuming an input current change of 1 milliampere and transistor gains of 10.

---

100 milliamperes

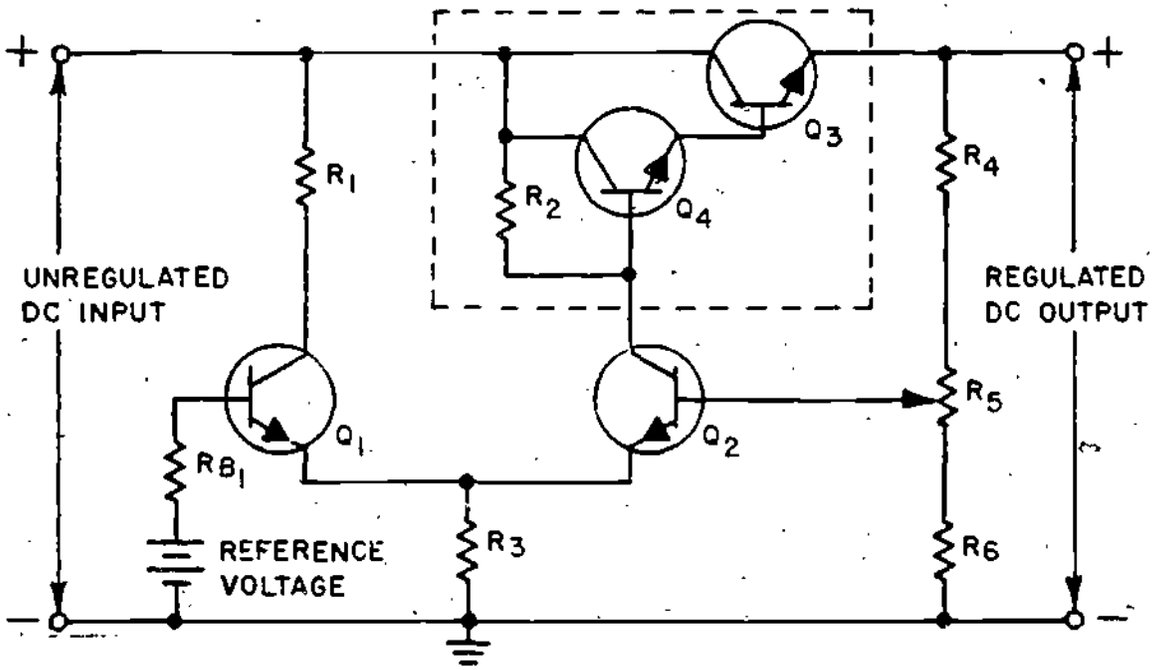


FIGURE 25

1. The circuit outlined with broken lines is called a

   a. Darlington amplifier

   b. voltage regulator

   c. voltage comparator

   d. voltage divider

2. Q1 and Q2 are part of a_____ circuit

   a. Darlington amplifier

   b. voltage regulator

   c. voltage divider

   d. voltage comparator

3. If Q3 and Q4 have a current gain of 20, what is the change in emitter output current of Q3 when a 2 milliamperes current change is applied to the base of Q4?

When the DC input increases the output voltage will momentarily increase, causing a positive error signal at the base of Q2, which is part of the voltage comparator circuit. Because the collector voltage of Q2 is out of phase with the transistor's base, it appears as a negative (less positive) correction signal to the base of Q4. Refer to the schematic to make sure you understand this concept. With a negative correction signal at the base of Q4, there is a corresponding decrease in the forward bias of Q4. This results in a smaller base current for Q3 and an increase in the resistance of Q3. Because of the increased resistance, there is a greater voltage drop across Q3 which compensates for the increased input voltage and thus returns the output to the normal regulated value.

With a positive correction signal at the base of Q4 there is a/an _____ in the forward bias of the transistor and a/an _____ in the transistor's resistance.

a. increase, increase

b. decrease, increase

c. decrease, decrease

d. increase, decrease

---

d. increase, decrease

(33.) THIS IS A TEST FRAME, REFER TO THE SCHEMATIC SHOWN IN FIGURE 25 WHEN ANSWERING THE QUESTIONS. AFTER YOU ANSWER THE QUESTIONS COMPARE YOUR ANSWERS WITH THE CORRECT ANSWERS ON THE TOP OF THE PAGE FOLLOWING THE QUESTIONS.

1. a. Darlington amplifier
2. d. voltage comparator
3. 800 milliamperes
4. c. decreases
5. b. decreases

IF YOUR ANSWERS MATCH THE CORRECT ANSWERS GIVEN ABOVE YOU MAY GO TO TEST FRAME 38, OTHERWISE GO BACK TO FRAME 30 AND TAKE THE PROGRAMMED SEQUENCE AGAIN BEFORE TAKING TEST FRAME 33 AGAIN.

34. You now know how voltage regulators work to provide constant output voltages. If you concluded that in some circuits it may be necessary to regulate current output, you are correct. The circuitry which provides a constant current output is called a constant current regulator or just current regulator. The schematic shown in Figure 26 is a simplified schematic for a current regulator. The variable resistor shown on the schematic is used to illustrate the concept of current regulation. As you know from your study of voltage regulators a variable resistor does not respond quick enough to compensate for the changes. Notice that an ammeter has been included in the circuit to emphasize that the circuit is that of a current regulator.

4. When the wiper arm of R5 is moved toward R4, the DC output voltage of the regulator:

   a. increases

   b. remains the same

   c. decreases

5. When the load decreases, the collector voltage of Q2_____

   a. increases (more positive)

   b. decreases (less positive)

   c. stays the same

---

(35.) Since use of a variable resistor is not a practical way to control current fluctuation or variation, a transistor and Zener diode, together with necessary resistors, are used. Recall that the Zener diode provides a constant reference voltage. The schematic shown in Figure 27 is that of a current regulator circuit.

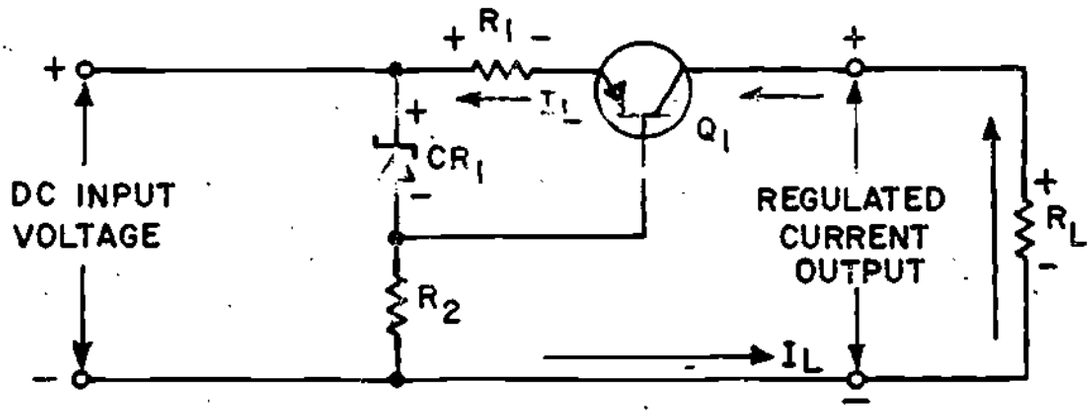


FIGURE 27
CURRENT REGULATOR

Except for the addition of R1, the circuit shown in Figure 27 is similar to a series voltage regulator. The resistor is connected in series with the load and senses current changes in the load.

Notice the voltage drop across RI and the negative voltage polarity applied to the emitter of QI. The voltage polarity is a result of current flowing through RI and this negative voltage opposes the forward bias for QI. However, since the regulated voltage across Zener diode CRI has an opposite polarity, the actual bias of the transistor is the difference between the two voltages. You can readily see that the purpose of R2 is to function as a current limiting resistor for the Zener diode.

---

no response required

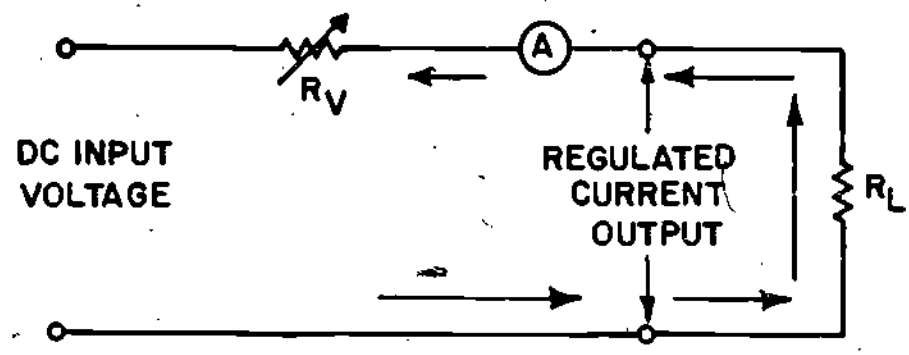


FIGURE 26
SIMPLE CURRENT REGULATOR

When the circuit functions properly, the current reading of the ammeter remains constant. In this case the variable resistor Rv compensates for changes in the load or DC input voltage. It has probably occurred to you that adequate current regulation results in the loss of voltage regulation. Study the schematic shown, recalling that any increase in load resistance causes a drop in current. When the load resistance increases, in order to maintain a constant current flow, the resistance of Rv must be reduced. This causes the total resistance to remain constant. An increase in the input voltage must be compensated for by an increase in the resistance of Rv, thereby maintaining a constant current flow. As you can readily understand, the operation of a current regulator is similar to that of a voltage regulator. The basic difference is that one regulates current and the other voltage.

When there is an increase in the load resistance $R_L$, the resistance of Rv increases/decreases to compensate for the change.

---

decreases

If you have concluded that without current regulation, a drop in the input voltage will cause a decrease in current output, you are correct.

---

No response required

(37.) Since you are familiar with the basic current regulating circuitry, let's examine in detail how the various components work to maintain the constant 400 milliampere output. Refer to the schematic shown in Figure 29.

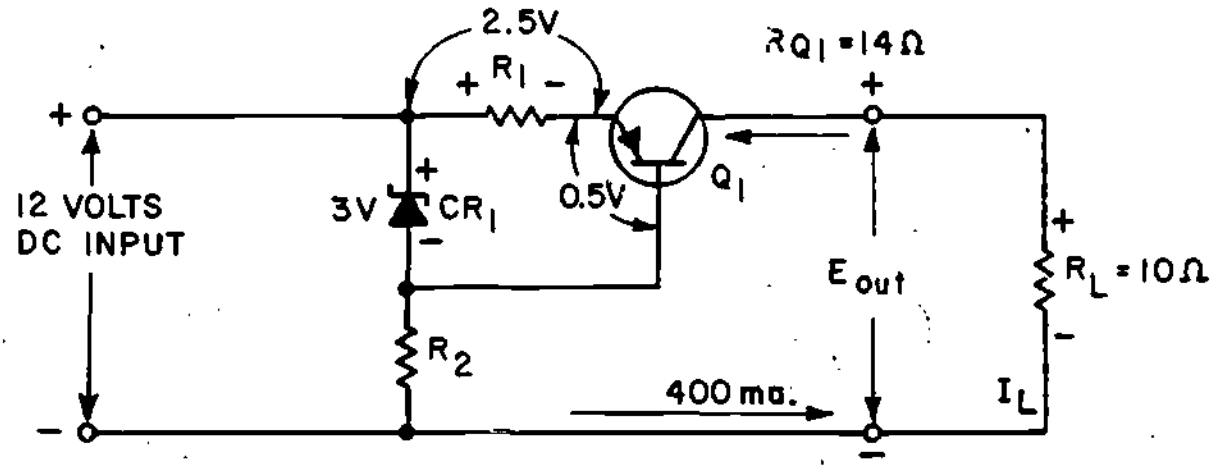


FIGURE 29
CURRENT REGULATOR

Recall that a decrease in load resistance causes a corresponding increase in current flow. In the example shown, the load resistance RL has dropped from 15 ohms to 10 ohms. This results in a larger voltage drop across R1 due to the increased current flow. The voltage drop has increased from 2.4 volts to 2.5 volts. Of course, the voltage drop across Zener diode CR1 remains constant at 3 volts due to its regulating ability. Because of the increased voltage drop across R1, the forward bias on Q1 is now 0.5 volts. Since the forward bias of Q1 has decreased, the resistance of the transistor increases from 9 ohms to 14 ohms. Notice that the 5 ohm increase in resistance

(36.) You know the purpose of a current regulator is to provide a constant current regardless of changes in the input voltage or load current.

The schematic shown in Figure 28 is that of a circuit designed to provide a constant current of 400 milliamperes.

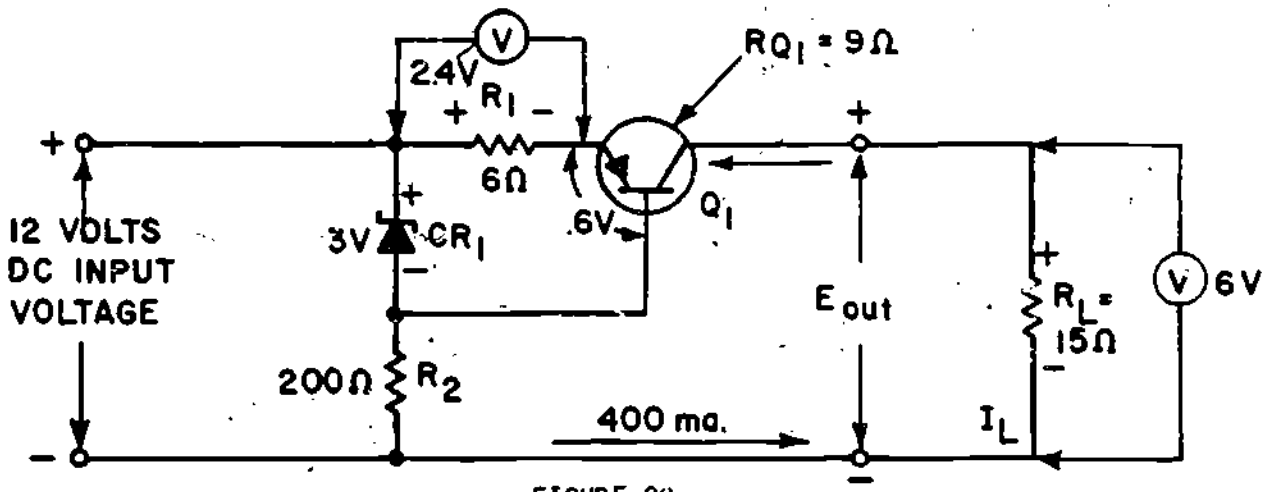


FIGURE 28
CURRENT REGULATOR

As you study the schematic notice that voltmeters are shown in order to emphasize the voltage drops across specific components. These voltages will help you understand how the current regulator operates. When you examine the schematic notice that the voltage drop across the base-emitter junction of Q1 is 0.6 volts. This voltage is the difference between the Zener voltage and the voltage drop across R1. The 0.6 volt forward bias of Q1 permits operation in a linear range. The output voltage across RL is 6 volts as shown by the voltmeter. Notice that with a regulated current output of 400 milliamperes, the transistor resistance is 9 ohms. This can be proved by using ohm's law and the values shown on the schematic. In this case current (I) is equal to the voltage drop (E) divided by the resistance (R). Therefore: 12 volts 30 ohms = 0.4 amperes or 400 milliamperes.

38. THIS IS A TEST FRAME. STUDY THE SCHEMATIC SHOWN IN FIGURE 30 AND ANSWER THE QUESTIONS. AFTER YOU COMPLETE THE QUESTIONS COMPARE YOUR ANSWERS WITH THE ANSWERS GIVEN AT THE TOP OF THE PAGE FOLLOWING THE TEST QUESTIONS.

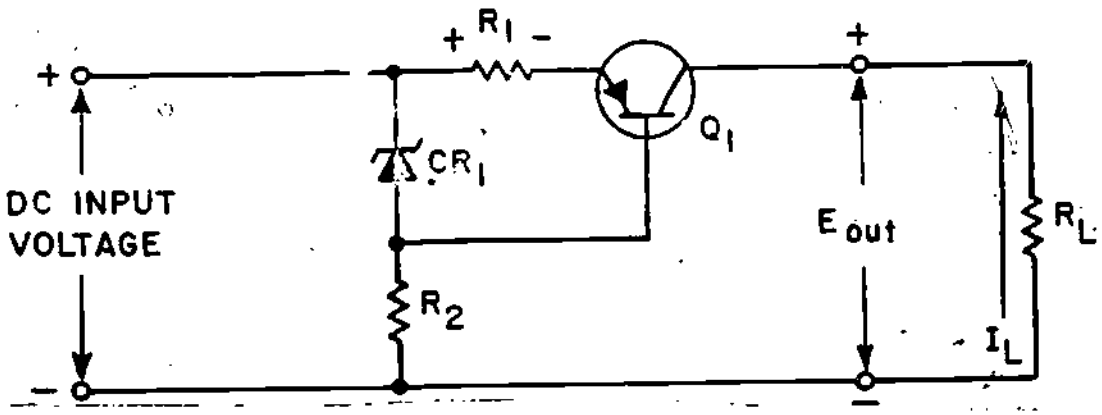


FIGURE 30
CURRENT REGULATOR

1. The voltage drop across the base-emitter junction of Q1 is the sum/difference of the voltage drops across R1 and diode CR1.

2. Any decrease in the load resistance $R_L$ will cause a/an_____ in the forward bias of Q1 and a/an_____in the transistor resistance.

   a. increase, increase

   b. decrease, decrease

   c. increase, decrease

   d. decrease, increase

3. The resistance of Q1 increases as a result of

   a. a decrease in circuit load

   b. an increase in circuit load

---

across the transistor corresponds to the 5 ohm decrease in the load resistance. Thus, the total resistance around the outside loop of the circuit remains constant. Since the circuit is a current regulator, you know that output voltages will vary as the regulator maintains a constant current output. In the example the voltage output is reduced to 4 volts, computed by multiplying current (I) times resistance (R). (400 ma x 10 ohms = 4 volts)

Any decrease in the base-emitter forward bias across Q1 results in a/an increase/decrease in the transistor's resistance.

---

increase

1. difference
2. d. decrease, increase
3. b. an increase in circuit load

IF YOUR ANSWERS AGREE WITH THE ANSWERS GIVEN PROCEED TO TEST FRAME 51, OTHERWISE GO BACK TO FRAME 34 AND TAKE THE PROGRAMMED SEQUENCE BEFORE TAKING TEST FRAME 38 AGAIN.

39. Although fuses and circuit breakers offer some circuit protection, their response time to circuit overloads is not fast enough to prevent damage to delicate circuits which use junctions and semi-conductor components. For this reason current limiter circuits are required. They normally function within a voltage regulated power supply. Figure 31 shows a schematic for a simple current limiter. The purpose of the limiter is to protect the power supply against a current overload. If you have concluded that the current limiter circuit is almost identical with a current regulator you are correct. The one basic difference between the two circuits is the size of the series resistor.

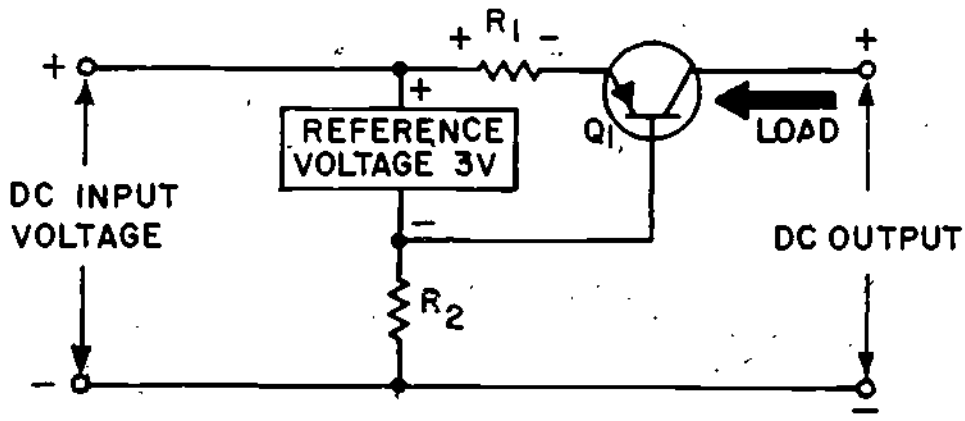


FIGURE 31
SIMPLE CURRENT LIMITER

# GOT A SAFETY SUGGESTION?

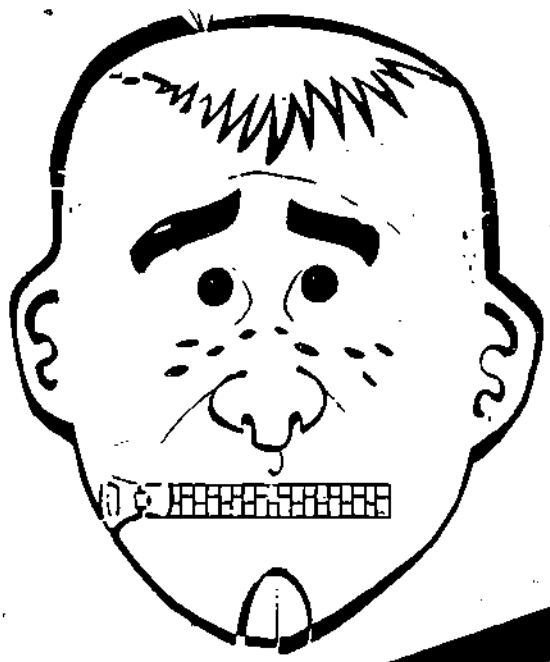

**Don't keep it to yourself!**

U.S. Naval Safety Center,
NAS, Norfolk, Virginia 23511

C16-GS-266

---

a. decrease, increase

(40.) You now understand the principles of current limiting. The schematic shown in Figure 32 shows how a current limiter is used in an actual circuit. Examination of the schematic reveals that the limiter is in fact made up of two separate circuits which you already understand; a Shunt Voltage Regulator and a Darlington Amplifier. Notice that components which make up the two circuits mentioned have been outlined with dotted lines to help you understand the relationship more readily.

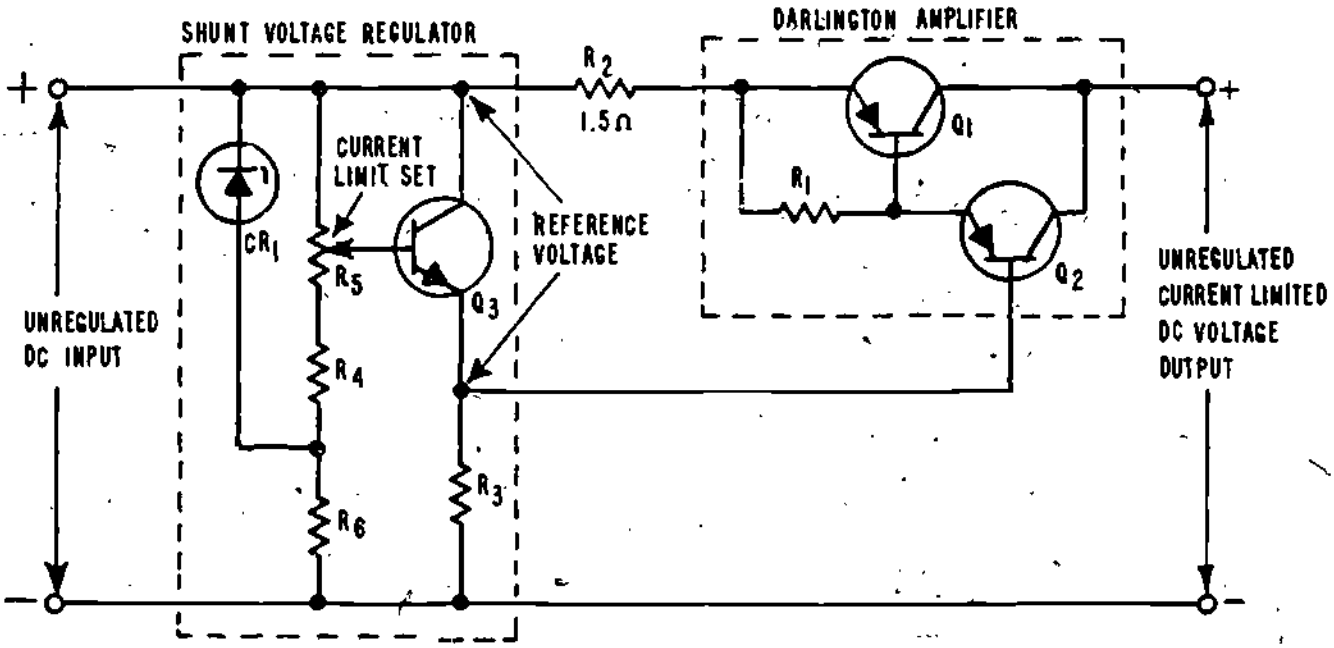


FIGURE 32
CURRENT LIMITER CIRCUIT

[illegible] in current regulators have a higher resistance value than those which are used in current limiters.

A regulated reference voltage is needed in order for a current limiter to work. For simplicity, the required circuit is shown as a box in Figure 31. If you cannot recall components or circuitry which provide reference voltages refer to earlier frames of this lesson.

Notice that the reference voltage shown is 3 volts. Recall that this voltage and the voltage drop across resistor R1 determine the forward bias of Q1 and the ultimate output voltage. Because the total load passes through R1, the voltage drop across this resistor is a direct indication of the load.

Up to the point where limiting occurs, the transistor in a current limiter stage is operating at or near saturation. That is to say, the voltage drop across R1 does not affect the transistor's resistance significantly (it is very small). However, when the load increases to the limiting point, the voltage drop across R1 will begin to force the transistor out of saturation and into the operating region, which increases the transistor's resistance, thus reducing the output voltage from the supply. This then limits the total current output.

When limiting occurs an increase in the voltage drop across R1 results in a/an_____in the forward bias of Q1 and a/an_____ in the transistor's resistance.

a. decrease, increase

b. increase, decrease

c. decrease, decrease

d. increase, increase

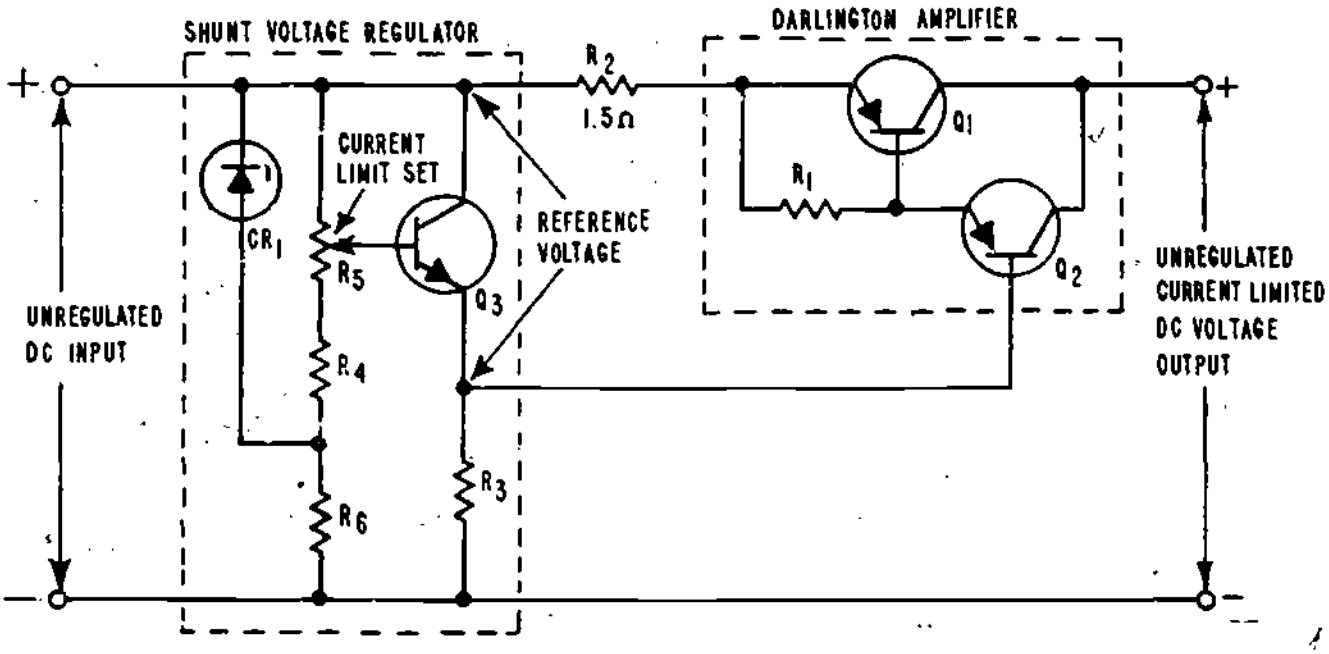


FIGURE 32

CURRENT LIMITER CIRCUIT

(41.) Refer to Figure 32. Notice the Darlington amplifier enclosed by the dotted lines on the right hand side of the figure and recall that the output of a Darlington type amplifier is the product of the gain of each of the transistors. For a review of this concept and a more detailed explanation, refer to frames 31 through 33 of this lesson.

The addition of R2 is necessary to enable the Current Limiter circuit to operate. The purpose of this key resistor is to sense the load

112

Study the circuit designated as the Shunt Voltage Regulator and notice that an unregulated DC input voltage is converted, or changed, to a reference voltage by the regulator. If you do not recall exactly how this is accomplished, refer to frames 19 through 24 in this lesson.

Notice that the reference output voltage is variable and depends on the setting of R5. The wiper arm setting of the potentiometer thus determines what the reference voltage will be, and indirectly, the current limiting level.

The component which determines the output reference voltage of the transistor shunt regulator circuit in Figure 32 is:

a. CR1

b. R4

c. Q3

d. R5

---

d. R5

The schematic shown in Figure 33 (foldout)*includes all of the circuits which you have studied. It is the schematic for the NIDA Model 201 Power Supply trainer which you will have an opportunity to use as you complete the Job Program for this lesson. As you study the schematic, notice particularly that it is in fact made up of four separate and distinctly different circuits which are interconnected. The circuits may be described as the rectifier/filter circuit, overload protection circuits, voltage regulator circuit, and monitoring circuit. The operation of each of the circuits is explained in the following frames. If you have difficulty understanding any circuit refer to appropriate frames in this lesson.

| | |
|---|---|
| series voltage regulator | frame 7 and 13 through 18 |
| shunt voltage regulator | frame 8 and 19 through 24 |
| voltage comparator | frames 26 through 29 |
| Darlington amplifier | frames 31 through 33 |
| current regulator | frames 34 through 38 |
| current limiter | frames 39 through 41 |

---

no response required

(43.) T1, CR1 and CR2 and C1 function as a full-wave rectifier to provide unregulated DC input voltage. The voltage across terminals 2 and 6 of this trainer, is approximately 40 volts.

If you wish to review and refresh your memory concerning full-wave rectification, study module/lesson 20-IV

---

no response required

*Refer to schematic at end of Lesson 2.

and convert it to a voltage drop to provide control for the Darlington amplifier. Using a reference voltage of 3 volts, the operation of the limiter will now be explained. With a load current of approximately 1.6 amperes, the voltage drop across R2 is approximately 2.4 volts and limiting occurs. At this time, Q1 and Q3 have about 0.3 volts across their base-emitter junction. This reduction of forward bias causes the resistance of the transistors to increase, thus the output voltage is reduced. You know that this change in voltage output limits the current output to 1.6 amperes. You now also understand how the limiter works and how the output current limit level may be changed by adjusting the current limiting resistor R5.

The component which provides control for the Darlington amplifier is:

a. R3

b. R2

c. R5

d. R4

---

b. R2

(42.) So far you have learned about circuits which are used to regulate, or control, voltage and current outputs and the phases of regulation have been explained in detail. Perhaps you have wondered how the circuits are combined in an actual situation to accomplish complete regulation.

(46.) The next stage shown in the schematic is the primary voltage regulation stage made up of circuits which you are already familiar with. The stage contains a reference series voltage regulator, current regulator, voltage comparator, and a Darlington amplifier. Operation of each of the circuits is briefly described in subsequent frames to help you understand how each of the circuits contribute to a complete, or total, power supply.

---

no response required

(47.) The reference series voltage regulator circuit consists of Zener diode CR5, Q7, R13, R11, R12, and C5. The purpose of the regulator is to provide a reference input voltage for the voltage comparator. The reference voltage may be set between zero (0) and 14.3 volts by adjusting R13. Thus, R13 provides coarse control of the total regulated voltage from the supply.

The output of the reference series voltage regulator is applied to the_____of Q8.

a. emitter

b. collector

c. base

---

c. base

(48.) The voltage comparator circuit consists of Q8 and Q9 and associated resistors. Recall that the purpose of the comparator is to compare error and reference voltages. The circuit then amplifies the difference voltage in order to produce a correction signal. Fine control

(44.) Again refer to the foldout schematic and notice that the unregulated DC output of the rectifier provides the input for the overload protection stage which is comprised of a current limiter and circuit breaker. Notice that the current limiter is composed of a shunt voltage regulator and a Darlington type amplifier, consisting of Q1 and Q2, and is identical with the current limiter you previously studied. The only difference in this case is that circuit breaker Cb1 is included to provide overall circuit protection if the current limiter components fail.

The component which provides overall circuit protection for the regulated power supply is_____.

---

circuit breaker Cb1

(45.) As you study the schematic you can see that the current limit point may be varied by adjusting R5 and that the output of the circuit ranges from 10 milliamperes to 1.6 amperes. The unregulated output voltage measured across terminals 1 and 15 approximates 35 volts. The maximum current output, of course, is determined by the setting of R5.

Maximum current output of the circuit may be varied by adjusting _____.

---

R5

(50.) The Darlington primary series voltage regulator consists of Q4 and Q3 and operates to provide primary control of the output voltage. Remember the output current gain of a Darlington amplifier is the product of the current gain of the two transistors which make up the amplifier. In this circuit the amplifier converts changes in the voltage output of Q9 into changes in the resistance of Q3/Q4. Remember the source of the error signal is the wiper arm of R17. The functions of C5 and C6 is to minimize distortion or spurious signals caused by moving the wiper arms of potentiometers R13 and R17.

The output current gain of the Darlington amplifier is the_____of the current gain of the transistors which make up the amplifier.

a. sum

b. difference

c. product

d. ratio

---

c. product

(51.) THIS IS A TEST FRAME. STUDY THE FOLD OUT SCHEMATIC AND ANSWER THE QUESTIONS. AFTER YOU COMPLETE THE QUESTIONS COMPARE YOUR ANSWERS WITH THE ANSWERS GIVEN AT THE TOP OF THE PAGE FOLLOWING THE TEST QUESTIONS.

1. The component which provides overall circuit protection for the power supply is_____.

2. The component which sets the limit for current output is _____.

of the supply output voltage level is accomplished by changing the setting of R17. The correction signal from the collector of Q9 is applied to the base of Q4 and together these transistors form part of a Darlington primary series voltage regulator.

The correction signal from the collector of transistor Q9 serves as the input to the_____of Q4.

a. emitter

b. base

c. collector

---

b. base

(49.) The current regulator circuit consists of CR4, Q6, R8, and R10. The purpose of the circuit is to maintain a constant current through Q6 and R8. The current flowing through Q6 is held constant because of the action of CR4 and R8. The output of the current regulator remains constant because current changes in Q9 are offset by an equal and opposite change in current flow through Q4.

The component which senses the change in current in the current regulator is

a. CR4

b. Q6

c. R8

d. R10

---

c. R8

1. Circuit breaker Cb1 or just Cb1

2. R5

3. a. base

4. R17 and R13

5. b. base

c. d. product

IF YOUR ANSWERS MATCH THE CORRECT ANSWERS YOU HAVE COMPLETED LESSON 2 MODULE 30-CONGRATULATIONS! AT THIS POINT, YOU MAY TAKE THE LESSON PROGRESS CHECK. IF YOU ANSWER ALL SELF-TEST ITEMS CORRECTLY, PROCEED TO THE JOB PROGRAM. IF YOU INCORRECTLY ANSWER ONLY A FEW OF THE PROGRESS CHECK QUESTIONS, THE CORRECT ANSWER PAGE WILL REFER YOU TO THE APPROPRIATE PAGES, PARAGRAPHS, OR FRAMES SO THAT YOU CAN RESTUDY THE PARTS OF THIS LESSON YOU ARE HAVING DIFFICULTY WITH. IF YOU FEEL THAT YOU HAVE FAILED TO UNDERSTAND ALL, OR MOST, OF THE LESSON, SELECT AND USE ANOTHER WRITTEN MEDIUM OF INSTRUCTION, AUDIO/VISUAL MATERIALS (IF APPLICABLE), OR CONSULTATION WITH LEARNING CENTER INSTRUCTOR, UNTIL YOU CAN ANSWER ALL SELF-TEST ITEMS ON THE PROGRESS CHECK CORRECTLY.

3. The output of the reference series voltage regulator stage is applied to the_____of Q8.

a. base

b. collector

c. emitter

4. The output voltage level of the voltage comparator stage is controlled by_____and_____.

5. The output voltage from the collector of Q9 provides the input to the_____of Q4.

a. emitter

b. base

c. collector

6. The output gain of the Darlington amplifier represented by Q3 and Q4 is the_____of the transistor's gain.

a. difference

b. sum

c. ratio

d. product

---

There are two basic types of voltages regulators, series and shunt. The classification of a regulator depends on how the regulator is connected in the total circuit. Series regulators are connected in series while shunt type regulators are connected in parallel with the output load. The illustrations in Figure 2 show the difference between the two types of regulators in a simplified form.

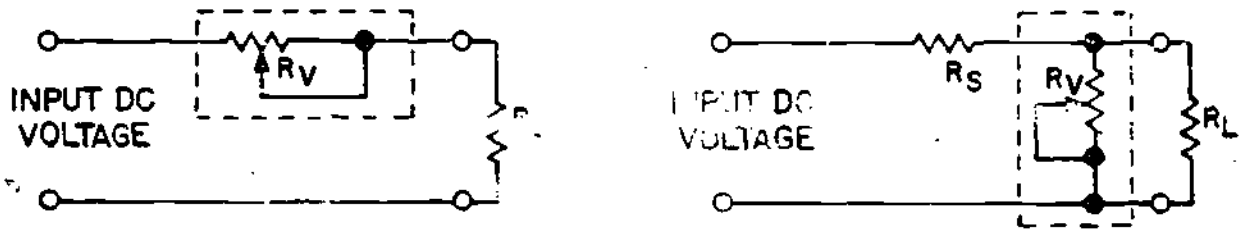


Figure 2

SERIES REGULATOR SHUNT REGULATOR

The regulating devices are shown as variable resistors although in actual practice, the circuitry is more complex. As the theory of regulation is developed and expanded the use of other components will be explained. The variable resistor is used initially to acquaint you with the concept of voltage regulation.

The schematic shown in Figure 3 illustrates the principle of series voltage regulation. In this case, the regulating device is connected so that the output load current must pass through the regulator.

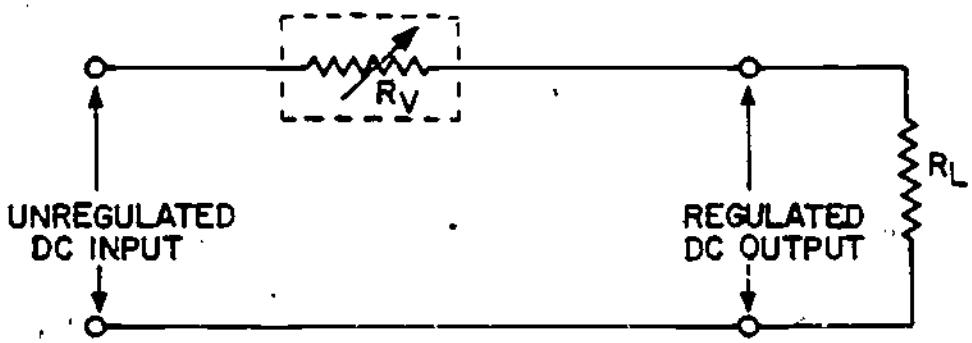


Figure 3

SERIES TYPE REGULATOR

As you study the schematic you readily understand that as the input voltage increases the output voltage also increases unless the regulator Rv compensates for the additional increases in some way. This is exactly what happens. To compensate for the increased voltage input it is necessary to increase the resistance of the regulating device Rv.

NARRATIVE
Lesson 2

## Transistor, Voltage and Current Regulators

You are already familiar with methods used for rectifying, increasing, and decreasing voltages. This lesson covers circuits which are designed to regulate, or maintain, constant voltage and current outputs. These circuits are called either voltage or current regulators, depending on their purpose. Since many military electronic equipments require precise unchanging voltage and current inputs, these special devices are often used in Navy equipments. Many of these devices are designed to maintain voltage or current outputs within plus or minus (±) 0.1%. Of course, the actual tolerance depends on the type of circuit and its criticality.

The diagram in Figure 1 pictorially shows the purpose of a voltage regulator. Notice particularly that as shown, the regulator modifies, or changes, the DC output by reducing the output ripple.

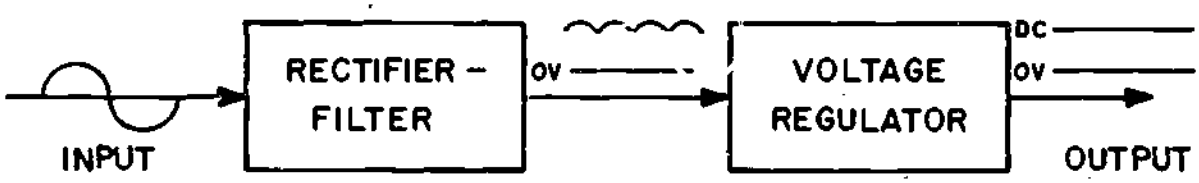


Figure 1

PURPOSE OF A VOLTAGE REGULATOR

Zener provide sufficient regulation and/or current handling capability, a different type of regulating device is required. The device which provides good regulation and current handling capability is the transistor.

Figure 5 shows the schematic for a typical transistor series voltage regulator.

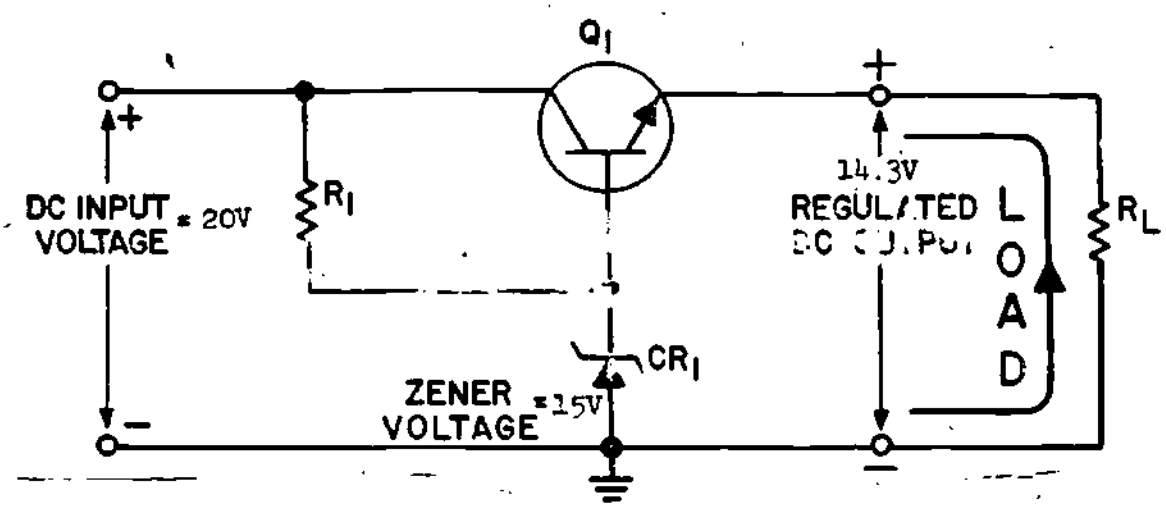


Figure 5

SERIES VOLTAGE REGULATOR

Notice that instead of a variable resistor a transistor is used. Q1 functions in much the same way that the variable resistor functioned. The advantage, of course, is that the transistor responds almost instantaneously to very small changes in input voltage or load.

Examine the schematic, paying particular attention to the voltages shown. These voltages are used to help you understand how the regulator functions. Notice that the Zener diode CR1 is a 15 Volt Zener. Recall that the Zener maintains a constant voltage across it. This voltage is used as a reference in transistor regulators. In this example, the Zener provides the reference base voltage for Q1.

Since Q1 is a series dropping device, all current from the power supply flows through it. Increases and decreases in the forward bias of the transistor result in transistor resistance changes and thus cause changes in current flow. With the 20 volt input shown and the 15 volt Zener voltage, the regulated DC output remains at 14.3 volts.

When the input voltage increases there is a momentary increase in the output voltage. At this time, the more positive voltage on the emitter of Q1 causes the forward bias of Q1 to decrease, causing an increase in the resistance of Q1. The increased resistance produces a larger voltage drop across the transistor, thereby maintaining a constant output voltage. Since the transistor operates automatically, the change takes place in less than a microsecond.

The increased resistance results in a larger voltage drop across the regulating device thereby causing the output voltage to remain constant. If you have concluded that any decrease in the input voltage results in a corresponding decrease in the resistance of the regulating device, Rv you are correct. The decrease in resistance reduces the voltage drop across the regulator and this causes the output voltage to remain constant.

Fluctuations in input voltage are thus compensated for by the regulating device. Increases and decreases in load current are also compensated for by the regulating device. When the load current increases there is a decrease in the resistance and voltage drop across voltage regulator Rv. Because of the smaller voltage drop across Rv, the voltage drop across RL remains almost constant. Spend a few moments studying the schematic to make sure you understand how the regulating device functions. As you do this, consider how Rv compensates when the load is decreased.

Figure 4 shows the schematic for a shunt type voltage regulator. Notice that the regulating device is connected in parallel with the load resistance RL. Because the regulating device Rv is connected in parallel with the load RL, the regulator and load share the same output voltage.

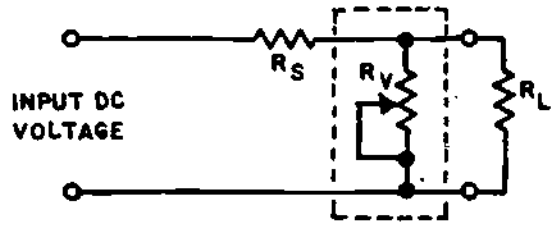


Figure 4

SHUNT TYPE VOLTAGE REGULATOR

Any increase in the input voltage apears across the parallel combination of RL and Rv, causing a momentary increase in the output voltage. To maintain the original output voltage, the resistance of the regulating device Rv is reduced. Because the resistance of Rv is reduced, more current flows through it. The increased voltage drop across Rs reduces the voltage drop across RL, thereby maintaining a constant voltage.

Now consider how the regulator functions when the input voltage decreases. If you have concluded that a decrease in input voltage causes an increase in the resistance of regulating device Rv, you are correct. Make sure you fully understand this concept before you proceed further.

Although it is possible to compensate for voltage variations by using a variable resistor, this type of regulator has limitations. A regulator that operates continuously and automatically without external manipulation is required. One such voltage regulating device is the Zener diode. Although the Zener is a better regulating device than the variable resistor, it also has limitations. The primary limitation is limited current handling capability. Because neither the variable resistor or

The schematic in Figure 7 is that of a transistor shunt type voltage regulator. Notice that the components of this circuit are identical with those of the series regulator except for the addition of the fixed resistor Rs.

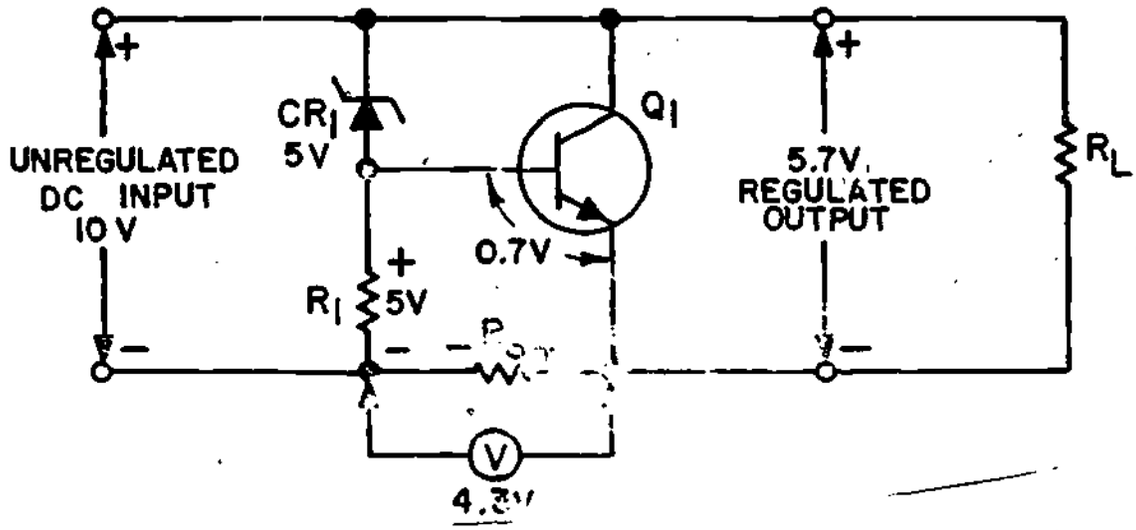


Figure 7

SHUNT TYPE VOLTAGE REGULATOR

As you study the schematic notice that series dropping resistor Rs is connected in series with the output load resistance. Note also that Zener diode CR1 and current limiting resistor R1 function as a voltage divider to provide a constant DC potential to the base-collector junction of Q1. Recall that one of the characteristics of a shunt type voltage regulator is that the regulating device is connected in parallel with the load resistance. Since Q1 is connected in parallel with RL, the regulator must be a shunt type.

The schematic shown shows a 10 volt unregulated input voltage. Since the voltage drop across Zener diode CR1 remains constant at 5 volts the voltage drop across R1 will remain at 5 volts as long as the input voltage and the load current remain constant. In this example the required output voltage is 5.7 volts. With the 10 volt input the voltage drop across the series aiding resistor remains at 4.3 volts. You have probably concluded that the voltage drop across this resistor is the key to the total circuit operation and that as long as the input voltage and load current remain constant, the voltage drop across Rs remains constant at 4.3 volts.

Now consider how the regulating device operates to compensate for changes in the input voltage. With an input voltage of 10.1 volts the output voltage momentarily increases to 5.8 volts. Because CR1 and R1 are connected in parallel with the load the increased voltage is also reflected across R1. Due to the increased voltage drop across R1, the forward bias of Q1 is increased slightly. This increase in forward bias results in a decrease in the transistors resistance thereby allowing more current to flow. Since the current must also flow through Rs, there is an increase in this resistor's voltage drop. In this case, the voltage drop across Rs becomes 4.4 volts. Simple

Momentary decreases in input voltage result in temporary drops in output voltage until the regulator compensates for the decrease. The regulator compensates for the change almost instantaneously.

Any decrease in the input voltage increases the forward bias of transistor Q1 (less positive voltage on emitter). The increased forward bias is coupled with a decrease in the transistor resistance. Because of the lower resistance, there is a smaller voltage drop across the transistor and therefore the voltage drop across the load remains constant. Make sure you understand how the regulator compensated for input voltage variations before you continue with this lesson.

The schematic shown in Figure 6 is identical with the one shown in Figure 5 including the voltages. Refer to this Figure as you study the explanation as to what happens when the load current changes.

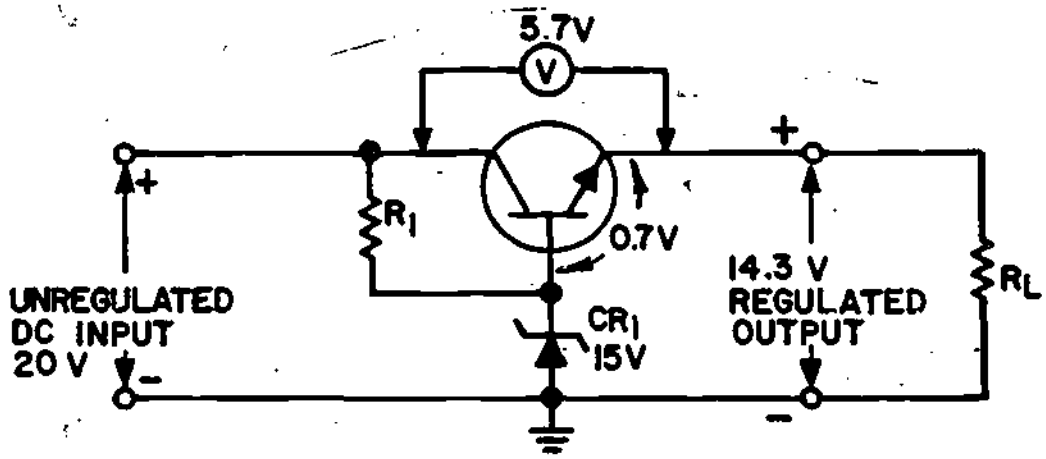


Figure 6

SERIES VOLTAGE REGULATOR

As long as the load current and input voltage remain constant, the output remains unchanged. Changes in the load current must also be compensated for by the regulating device. When the load current increases, there is a smaller voltage drop across RL. This increases the forward bias and reduces the resistance of the transistor. The decreased transistor resistance results in a smaller voltage drop across the transistor, and at the same time the voltage drop across RL returns to normal. Since this happens almost instantaneously the change is not visible on an oscilloscope screen or measurable with other test equipment. Before proceeding further, consider how the regulator compensates for a decrease in load current. A clear understanding will help you understand the rest of this lesson.

This causes the voltage drop across Rs to return to its former state. If you have concluded that the components react in the opposite way when the load current decreased you are correct.

You have learned how basic series and shunt transistor voltage regulators work and perhaps have wondered how regulation may be improved. A pictoral diagram of a circuit which produces a higher degree of regulation is shown in Figure 9. This circuit makes use of a voltage comparator.

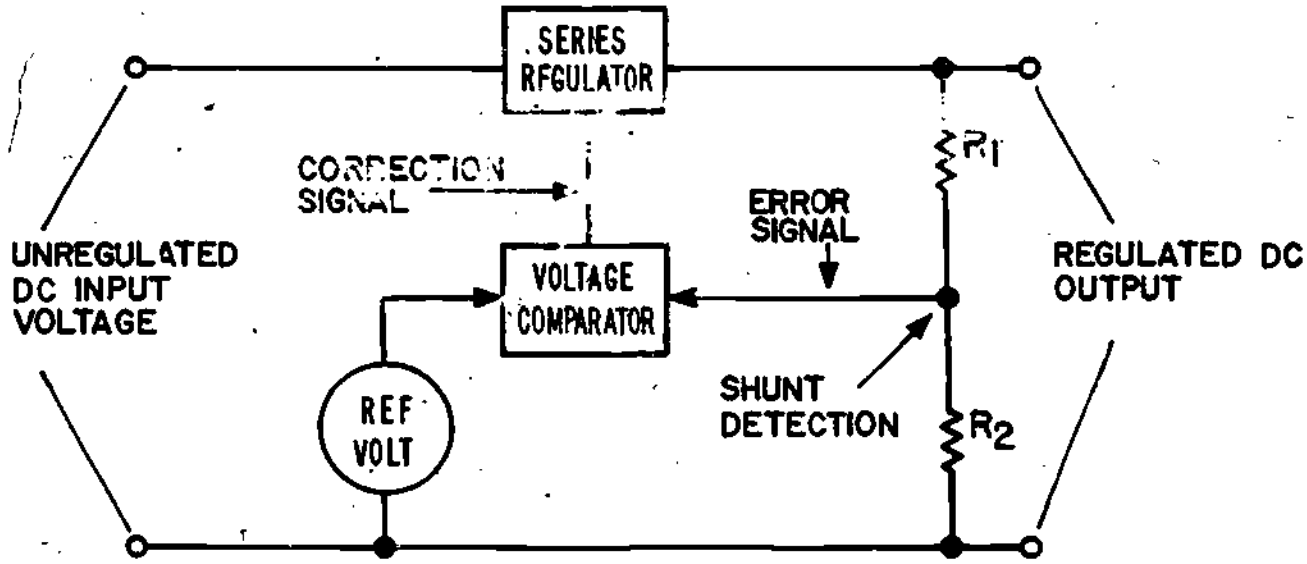


Figure 9

SHUNT DETECTED SERIES REGULATOR

A thorough understanding of how the comparator works will enable you to understand how very precise voltage regulation is accomplished.

Notice that a voltage divider is connected in shunt, or parallel, with the output of the voltage regulator. The divider is made up of R1 and R2. Changes in the output voltage are detected at the junction of the two resistors. A change in the regulated output is referred to as the error signal. This voltage, or potential, is applied to the voltage comparator. Examine the diagram and also note that a reference voltage is also applied to the comparator. The purpose of the comparator is to compare the error signal with the reference voltage and based on the comparison develop an output voltage which is called the correction signal. The correction signal, or voltage, is applied to the base of the regulating transistor and the transistor changes resistance to compensate for the increase or decrease in output voltage.

mathematics will convince you that this change assures an almost constant output voltage of 5.7 volts (e.g. 10.1 - 4.4 = 5.7).

Again refer to the schematic shown in Figure 7 and consider what happens when the input voltage drops. Assume that the input voltage drops to 9.9 volts. The voltage drop across R1 then becomes 4.9 volts. Recall that the voltage drop across the Zener remains constant at 5 volts and that the total voltage drop across the Zener and R1 is equal to the input voltage. Thus, the voltage drop across R1 changes to 4.9 volts. Of course, the output voltage also momentarily drops to 5.6 volts.

As the forward bias of Q1 decreases the current flow through the transistor also decreases. This reduces the voltage drop across Rs to 4.2 volts, thereby restoring the voltage drop across RL to 5.7 volts. This change is almost instantaneous and cannot be shown on an oscilloscope or demonstrated with other standard test equipment.

You may have wondered how the regulator compensates for changes in the load current. Refer to the schematic shown in Figure 8. Notice it is identical to the schematic shown in Figure 7 except for the voltage drop shown across the series dropping resistor Rs. Recall that the series dropping resistor is the key component of the shunt type voltage regulating device.

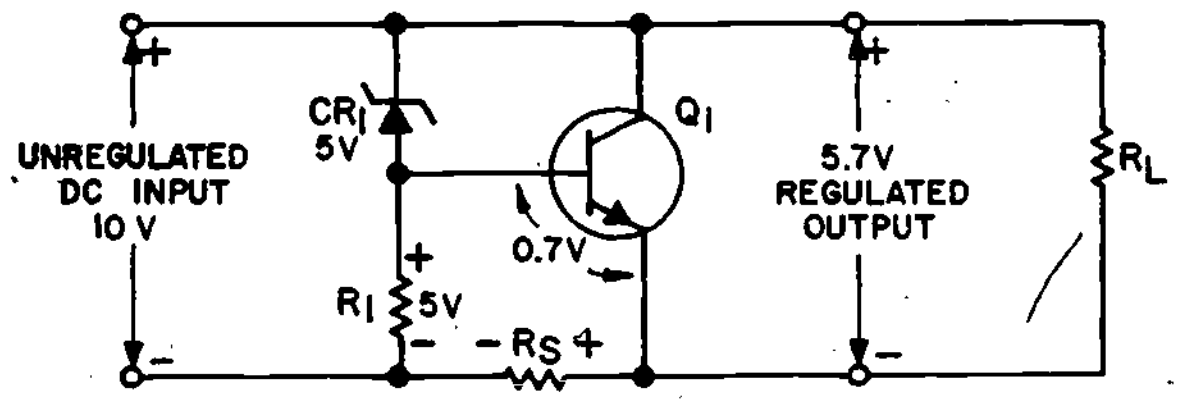


Figure 8

SHUNT TYPE VOLTAGE REGULATOR

As the load current increases through RL, the voltage drop across the series dropping resistor increases. This momentarily reduces the output across RL and causes Q1 to compensate for the changes.

The increased voltage drop across Rs, causes a reduction in the forward bias of the transistor, thereby increasing the transistor's resistance. The increased transistor resistance reduces the amount of current that flows through the transistor by the same amount that the load current increased. Thus, the final current through RS remains almost unchanged.

This is shown in the schematic as a voltmeter with no reading and means that the circuit shown is balanced and has no output. Variations in the error voltage affect the entire circuit. A positive error signal results in an increase in the forward bias of Q2 and a decrease in the resistance of the transistor. The smaller resistance allows more current to flow through R2, which decreases the voltage at the collector of Q2. Simultaneous with this there is an increase in the current flow through R3. This reduces the forward bias of Q1 and the collector current of the transistor. The decline in collector current at Q1 is offset by an increase in its collector voltage. Thus, we see that the collector voltages of Q1 and Q2 are 180°out-of-phase with each other. Therefore when the collector voltage of Q2 is more positive, the collector voltage of Q1 is less positive. You can readily understand this when you substitute numerical values. For example, with an error signal of + 1 volt the collector voltage of Q2 may be 2.5 volts less positive and the collector voltage of Q1 2.5 volts more positive, providing a source of negative and positive correction signals.

Again, consider the schematic and consider how a negative error signal affects the various circuit components and how the comparator compensates for such a change. Because you already understand what happens when a positive signal occurs, reverse logic will enable you to understand what happens when a negative error signal is produced. Substituting mathematical values, including transistor gains, will help you understand. Remember, Q1 and Q2 are identical with equal <u>out-of-phase collector</u> voltages.

The schematic shown in Figure 10 is a voltage comparator that is part of a shunt detected series voltage regulator.

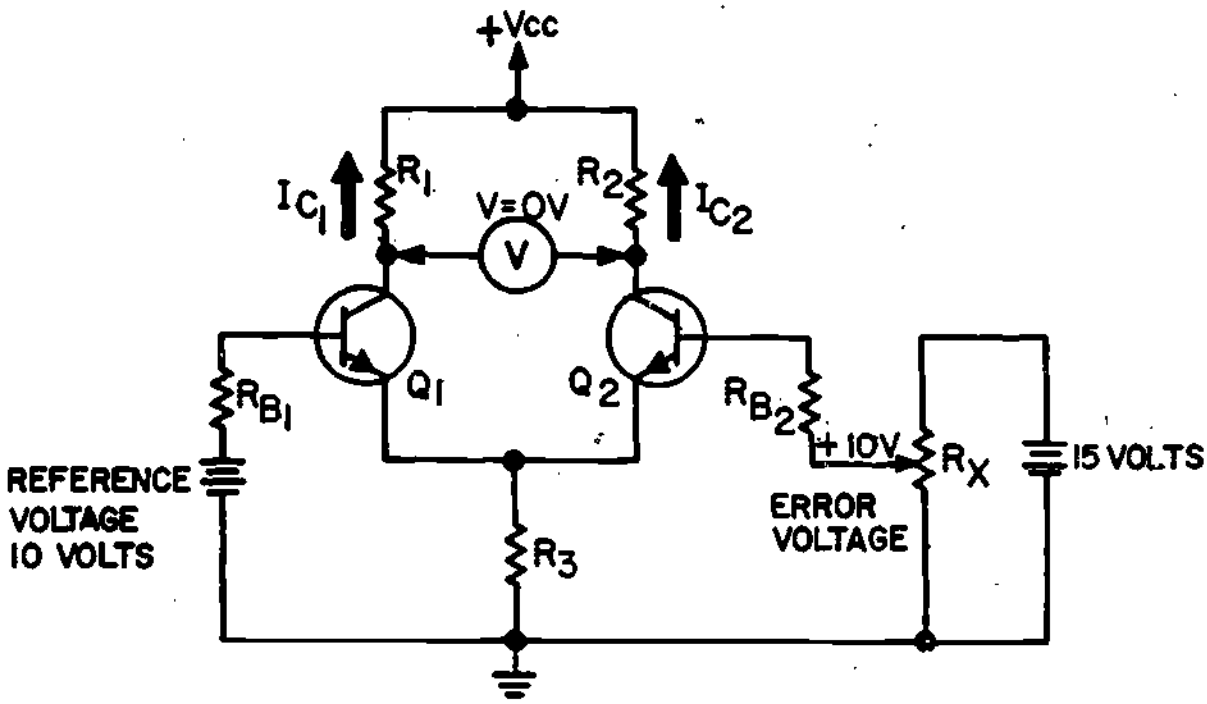


Figure 10

VOLTAGE COMPARATOR

Operation of the comparator will be explained first. Identical transistors, Q1 and Q2, and load resistors R1 and R2, are used with a common emitter resistor R3 to form the balanced circuit. The circuit shown is often called a differential amplifier, because it amplifies the difference between the inputs to Q1 and Q2.

Notice that a reference voltage of 10 volts is applied to the base of Q1 and that in this example an identical voltage is applied to the base of Q2. The difference in the input voltages to the base of Q1 and Q2 is referred to as the error signal. As long as the voltage applied to the base of Q1 and Q2 are identical, the potential between collectors of the two transistors stays at zero.

The schematic shown in Figure 12 is that of a Darlington type amplifier. This type of amplifier has the advantage of high input impedance and high gain. Notice the triangular symbol in the upper right hand corner of the schematic. The symbol is the Greek letter delta (Δ) and it is used to designate changes.

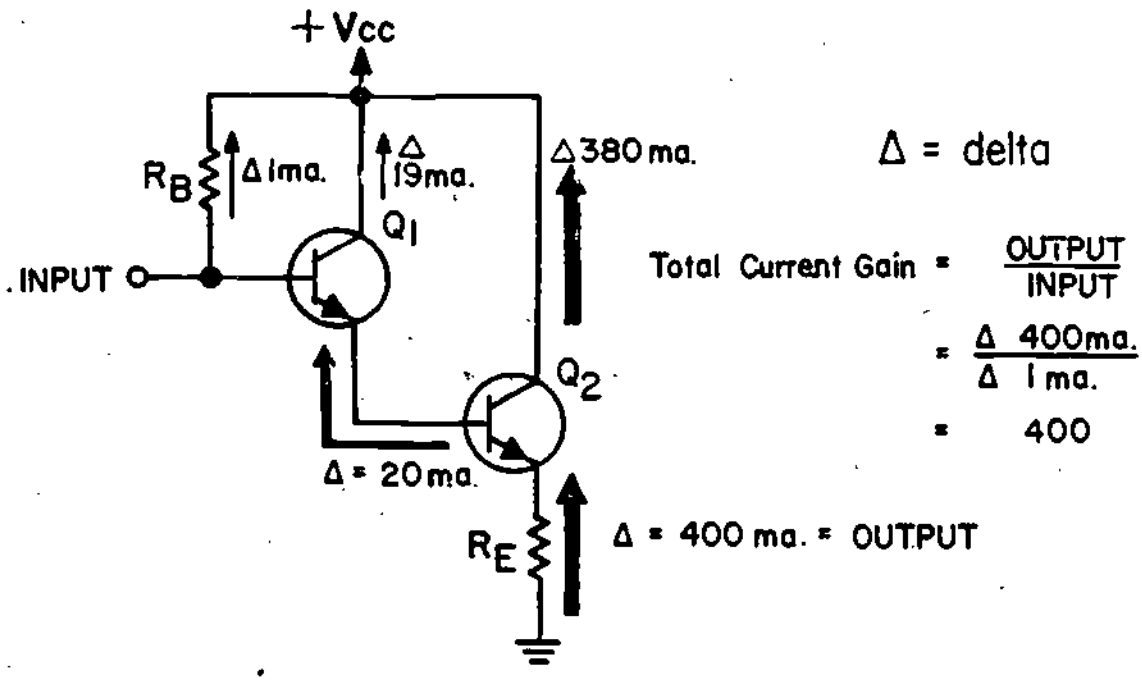


Figure 12

DARLINGTON AMPLIFIER

As you study the schematic notice that the emitter of Q1 is connected to the base of Q2. The emitter output current of Q1 is therefore the base current of Q2. This type of circuit results in a current gain which is the <u>product</u> of the current gain of the individual transistors.

Since both transistors shown have a gain of 20, an input of 1 milliampere at the base of Q1 will result in a 400 milliampere output from the emitter of Q2. Of course, the output of the Darlington type amplifier is dependent on the amplification factor of each of the transistors. Transistors are available with a variety of gains and gains in excess of 100 are common. The advantage of the Darlington amplifier is readily apparent.

Refer to the schematic shown in Figure 11 and notice a series regulator, Q3, and two additional resistors have been added to the comparator circuit. R4 and R6 combine with R5 to form a voltage divider across the output terminals of the supply. The wiper of R5 will control the power supply output voltage level.

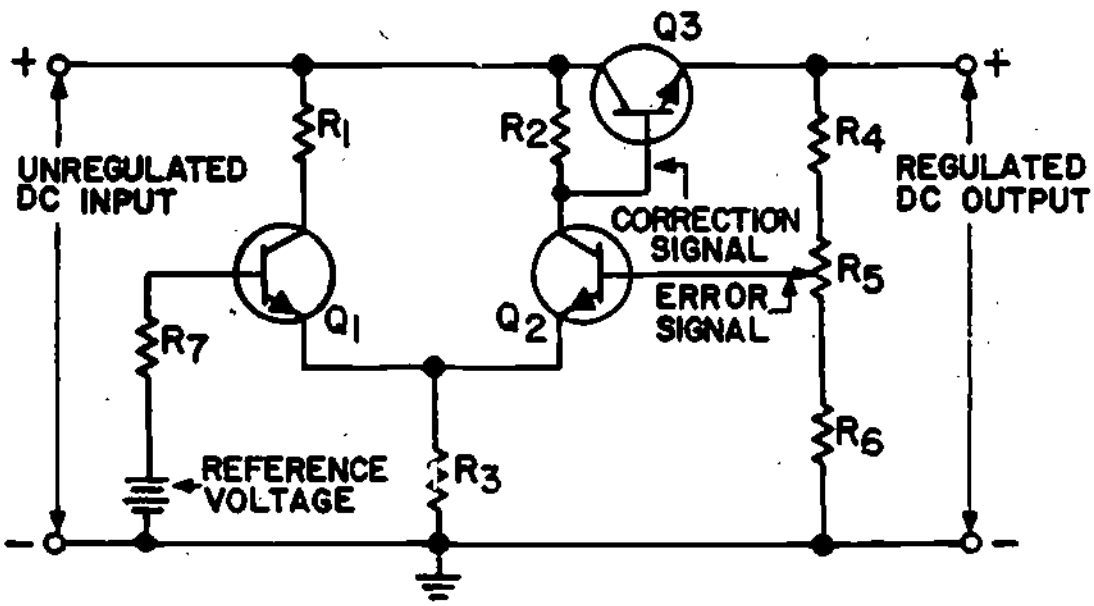


Figure 11

SHUNT DETECTED SERIES REGULATOR

Any change in the regulated output voltage is sensed at the wiper arm of R5 as an error signal, which is applied to the base of Q2. This causes an increase or decrease in the base voltage of Q2 depending on whether the error voltage is greater or less than the reference voltage. The forward bias of the transistor increases or decreases, depending on the error voltage.

The resistance of Q2 increases or decreases based on the voltage applied to the transistor base. This action causes the polarity of the correction voltage to be out-of-phase with the error signal. The correction voltage affects the forward bias of Q3 to compensate for load current or input voltage changes. The comparator circuit thus provides a high degree of sensitivity to signal change and thereby eliminates changes in the output voltage.

You are familiar with voltage regulators and understand how they operate to provide constant output voltages. It may have occurred to you that in some cases it is both necessary and desirable to regulate current. The circuits which provide current regulation are called current regulators. Of course, when current regulation is accomplished there is a loss of voltage regulation. If you have deduced that current regulation is similar to voltage regulation you are correct.

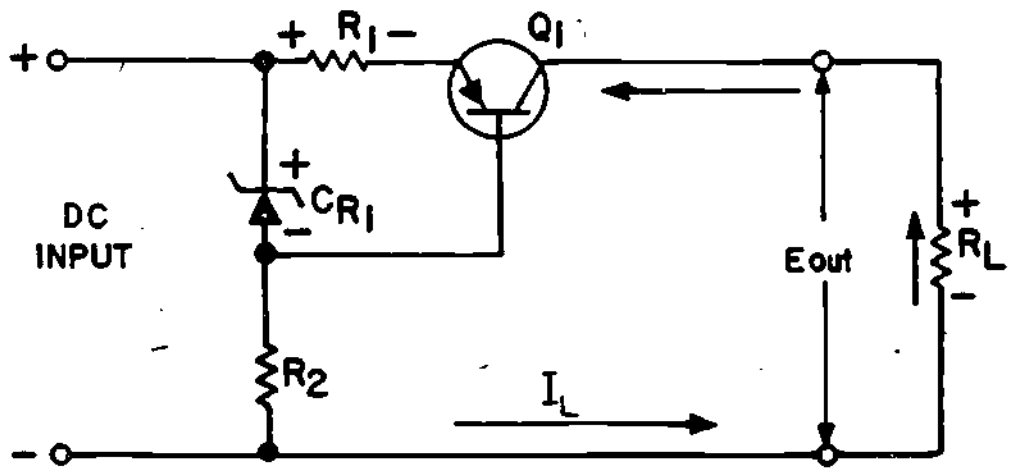


Figure 14

CURRENT REGULATOR

Except for the addition of R1, the circuit shown in Figure 14 is similar to a series voltage regulator. R1 is connected in series with the load resistance and senses current changes.

Notice the voltage drop indicated across R1 and the resultant negative polarity affecting the emitter of Q1. This negative voltage tends to decrease the forward bias on the transistor. Because the regulated voltage across the Zener has an <u>opposite</u> polarity, the actual bias of the transistor is the <u>difference</u> between the two voltages. Resistor R2 functions as the usual current limiting resistor for Zener diode CR1.

Since you understand how voltage regulators, voltage comparators, and the Darlington type amplifier operate, it is easy to understand how these circuits are combined to regulate voltage and current outputs.

The schematic shown in Figure 13 is that of a Shunt Detected Series Regulator which uses both a voltage comparator and Darlington amplifier.

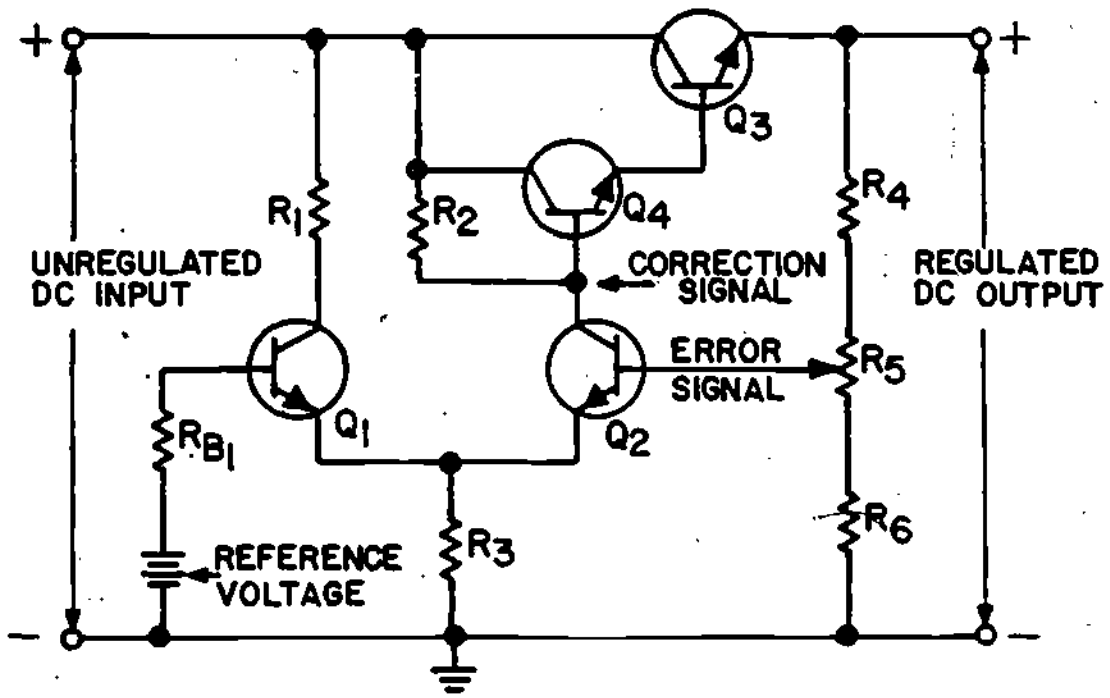


Figure 13

SHUNT DETECTED SERIES REGULATOR

Notice that Q3 and Q4 make up the Darlington amplifier and that the emitter output of Q4 is applied to the base of Q3. Recall how this results in a high current gain and that this gain is the product of the current gains of the two transistors.

When the DC input increases, a positive error voltage is produced at the base of Q2, which is part of the comparator circuit. Because the collector voltage of Q2 is out of phase with the base, it appears as a negative correction signal at the base of Q4.

This causes a decrease in the forward bias of Q4 and results in a smaller base current for Q3 and an increase in the resistance of Q3. Due to the increased resistance there is a greater voltage drop across Q3 which compensates for the increased input voltage.

The decrease in the transistor's forward bias results in a change in the transistor's resistance. The transistor resistance is now 14 ohms. Notice that the 5 ohm increase in transistor resistance corresponds to the 5 ohm decrease in load resistance. Therefore, the total resistance around the outside loop of the circuit remains constant.

Because the circuit is a current regulator, the voltage output varies as the regulator maintains a constant current output. In the example shown the output voltage is reduced to 4 volts computed as follows: E=IR (400 ma. X 10 ohms = 4 volts). At this time you should again refer to the schematic in Figure 15 and consider the effect of an increase in load resistance.

You know that circuit breakers and fuses offer some protection to components when circuits are overloaded. Unfortunately, their response time is not rapid enough to prevent damage to delicate semi-conductor junctions and components. For this reason a sensitive, more responsive circuit is required. The circuit which provides protection from current overloads is called a current limiter.

Figure 16 is a simplified schematic for a current limiter. The purpose of the limiter is to protect components against current overload. If you have concluded that the current limiter circuit is almost identical with a current regulator, you are correct. The one basic difference is the size, or value, of the series resistor.

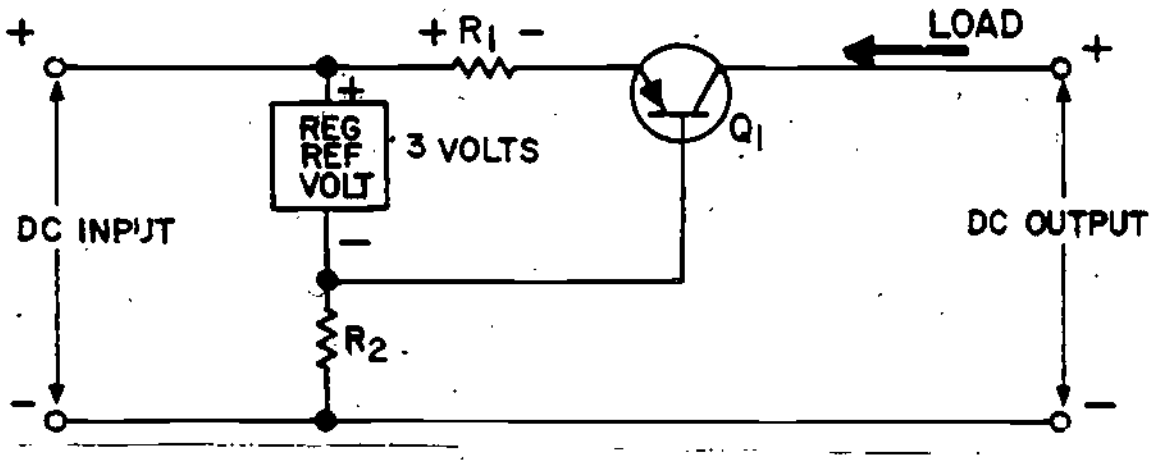


Figure I6

SIMPLE CURRENT LIMITER

The resistor which is used in the current limiter has a smaller resistance value than the current regulator resistor. In order for the current limiter to work, a reference voltage must be provided. For simplicity the reference voltage circuit is depicted as a box in the schematic. If you are unable to recall circuitry which provides a reference voltage refer to other parts of this lesson or the programmed instruction.

The schematic shown in Figure 15 is identical with the schematic shown in Figure 14 except voltage, resistance and current values are shown. The values are shown to help you understand how the regulator works and are referred to in the narrative which follows.

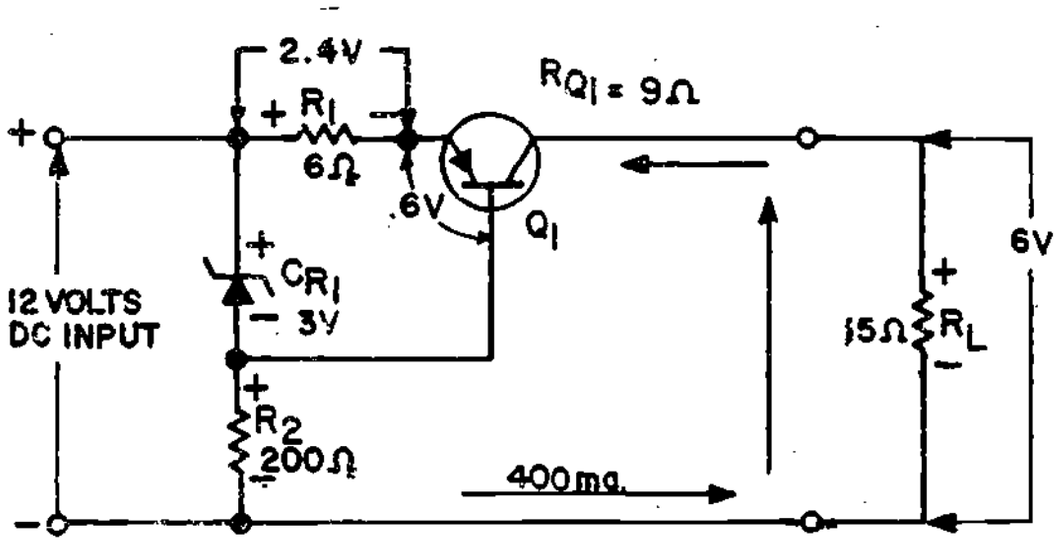


Figure 15

CURRENT REGULATOR

Notice that the voltage drop across the base-emitter of Q1 is 0.6 volt. This voltage is the difference between the Zener voltage and the voltage drop across R1. The voltage drop across RL is 6 volts. The regulated current output with the values shown is 400 ma. This can be readily proved by substituting the given values in Ohms Law. In this case the load current (*I*) is equal to the outerloop voltage drop (E), divided by the output loop resistance (R). Therefore: 12 ÷30 = 0.4 amperes or 400 milliamperes.

Again refer to Figure 15 as you read the explanation concerning the operation of the regulator. Recall that any decrease in load resistance causes a corresponding increase in current flow. Assume that the load resistance RL has dropped from 15 ohms to 10 ohms. This results in a greater voltage drop across R1, due to the increased current flow. The voltage drop across R1 is now 2.5 volts. Of course, the voltage drop across the Zener remains constant at 3 volts due to its regulating ability. Because of the increased voltage drop the forward bias of Q1 is now reduced to 0.5 volt.

Notice the part of the circuit designated as the Shunt Voltage Regulator. The function of this part of the total circuit is to convert, or change, the unregulated DC input voltage to a reference voltage. Note that a variable potentimeter determines the reference voltage and indirectly determines the current limiting level.

The circuit on the right hand side of the schematic is also one which you are familiar with - the Darlington amplifier. Remember the output of this type amplifier is the product of the gain of the individual transistors.

The addition of R2 is necessary in order for the limiter to operate. The purpose of this resistor is to sense the load and convert it to a voltage drop for control of the Darlington Amplifier. Based on a reference voltage of 3 volts, the operation of the limiter is now explained.

With a voltage drop of 2.4 volts across R2, the load current is approximately 1.6 amperes. With these values Q1 and Q2 have a potential of 0.3 across their base-emitter junctions. This forward bias is small enough to cause the resistance of the transistors to increase, thereby reducing the output voltage. This limits the current output to 1.6 amperes. Notice that the current output level may be changed by adjusting the current limiting resistor R5.

You should now be familiar with circuits which are used to regulate, or control, voltage and current outputs. As you complete the Job Program for this lesson you will work with the NIDA Model 201 Power-Supply Trainer. The circuits used in this trainer combine all the regulation circuits you have studied. As you become familiar with the NIDA equipment you will better understand how the regulation devices operate together to accomplish complete regulation.

YOU NOW HAVE COMPLETED THE NARRATIVE FOR LESSON 2, MODULE 30. CONGRATULATIONS! AT THIS POINT, YOU MAY TAKE THE LESSON PROGRESS CHECK. IF YOU ANSWER ALL SELF-TEST ITEMS CORRECTLY, PROCEED TO THE JOB PROGRAM. IF YOU INCORRECTLY ANSWER ONLY A FEW OF THE PROGRESS CHECKQUESTIONS, THE CORRECT ANSWER PAGE WILL REFER YOU TO THE APPROPRIATE PAGES, PARAGRAPHS, OR FRAMES SO THAT YOU CAN RESTUDY THE PARTS OF THIS LESSON YOU ARE HAVING DIFFICULTY WITH. IF YOU FEEL THAT YOU HAVE FAILED TO UNDERSTAND ALL, OR MOST, OF THE LESSON, SELECT AND USE ANOTHER WRITTEN MEDIUM OF INSTRUCTION, AUDIO/VISUAL MATERIALS (IF APPLICABLE), OR CONSULTATION WITH LEARNING CENTER INSTRUCTOR, UNTIL YOU CAN ANSWER ALL SELF-TEST ITEMS ON THE PROGRESS CHECK CORRECTLY.

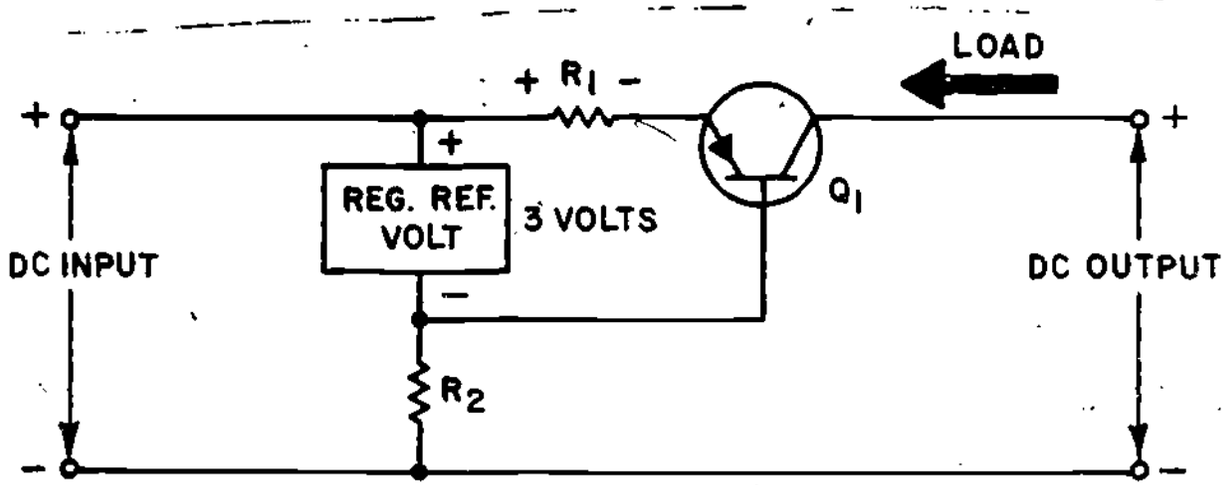


Figure 16

SIMPLE CURRENT LIMITER

Notice that the reference voltage shown is 3 volts. This voltage and the voltage drop across R1 determine the forward bias of Q1 and ultimately the total output voltage. Normally, Q1 is heavily forward biased, and saturated. Since the total load current passes through R1, the voltage drop across the resistor is a direct indication of the load current. When the load current increases there is a corresponding increase in the voltage drop across R1. When the current limit point is reached, the increase in voltage across R1 reduces the forward bias of Q1. The resultant increase in the transistor's resistance causes a decrease in the output voltage and current.

The schematic shown in Figure 17 shows how the current limiter is used in an actual circuit. When you study the schematic you see that the circuit is in fact made up of two circuits which you are already familiar with and understand. Each of the circuits and their contribution to current limiting are now discussed.

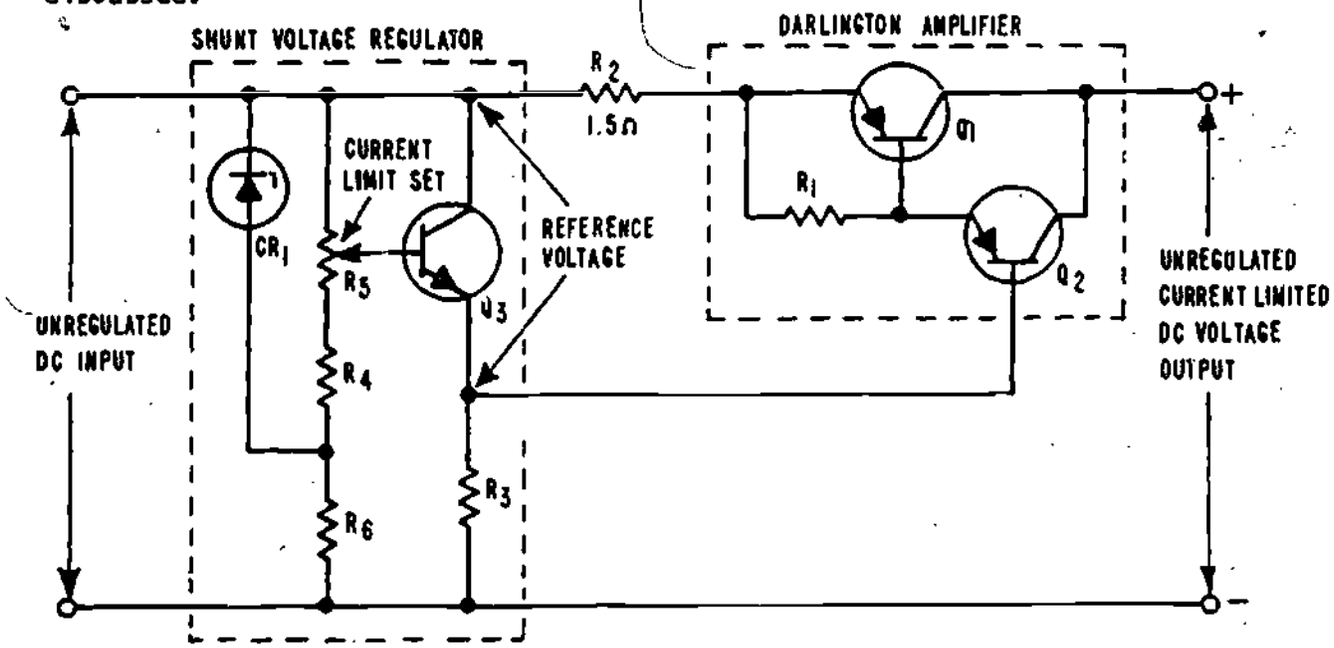


Figure 17

CURRENT LIMITER CIRCUIT

SCHEMATIC DIAGRAM

NIDA MODEL 201
WITH PC 201 INSERTED

PP 134/135

# OVERVIEW
# LESSON 3

## SCR Power Supply Circuits

In this lesson you will learn about Silicon Controlled Rectifier (SCR) power supply circuits and their application. You will learn how these circuits operate to control and provide high value DC current outputs. You will also learn why SCR power supplies are more efficient than other types of power supplies.

The learning objectives of this lesson are as follows:

TERMINAL OBJECTIVE(S):

30.3.50 When the student completes this lesson (s)he will be able to IDENTIFY the schematic diagrams, component functions, and operational principles of SCR power supply circuits, including the relationship between the conduction time of an SCR and the DC output voltage. 100% accuracy is required.

ENABLING OBJECTIVES

When the student completes this lesson, (s)he will be able to:

30.3.50.1 IDENTIFY the operating characteristics of a silicon controlled rectifier (SCR), including the conditions controlling the start, duration , and stop time of SCR conduction, by selecting the correct statement from a choice of four. 100% accuracy is required.

30.3.50.2 IDENTIFY the advantages of SCR power supplies by selecting the correct set of their characteristics from a choice of four. 100% accuracy is required.

30.3.50.3 IDENTIFY the schematic diagrams of full-wave, half-wave and bridge type SCR power supplies by selecting the correct name or diagram from a choice of four. 100% accuracy is required.

30.3.50.4 IDENTIFY the function of components and circuit operation (including their control of SCR conduction time) in full-wave, half-wave, and bridge-type SCR power supplies by selecting the correct statement from a choice of four. 100% accuracy is required.

BASIC ELECTRICITY AND ELECTRONICS

MODULE THIRTY

LESSON 3

# SCR POWER SUPPLY CIRCUITS

JULY 1980

# LIST OF STUDY RESOURCES
## LESSON 3

## SILICON CONTROLLED RECTIFIER THEORY

To learn the material in this lesson, you have the option of choosing, according to your experience and preferences, any or all of the following study resources:

Written Lesson presentation in:

Module Booklet:

- Summary
- Programmed Instruction
- Narrative

Student's Guide:

- Summary
- Progress Check

Enrichment Material(s):

NAVSHIPS 0967-000-0120 "Electronic Circuits", Electronics Installation and Maintenance Book (EIMB), Naval Ship Engineering Center, Washington, D.C.: U.S. Government Printing Office 1965.

YOU MAY USE ANY, OF ALL, RESOURCES LISTED ABOVE, INCLUDING THE LEARNING CENTER INSTRUCTOR; HOWEVER, ALL MATERIALS LISTED ARE NOT NECESSARILY REQUIRED TO ACHIEVE LESSON OBJECTIVES. THE PROGRESS CHECK MAY BE TAKEN AT ANY TIME.

# OVERVIEW

30.3.50.5 IDENTIFY the relationship between SCR conduction time and the amount of DC output voltage in full-wave, half-wave and bridge type SCR power supplies by selecting the correct explanation from a choice of four. 100% accuracy is required.

BEFORE YOU START THIS LESSON, READ THE LESSON LEARNING OBJECTIVES AND PREVIEW THE LIST OF STUDY RESOURCES ON THE NEXT PAGE.

The difference between the diode and the SCR is that even when the SCR is forward biased, it will not conduct until an adequate positive voltage is applied to its gate. Of course once conducting, it behaves like a diode and continues to conduct until the forward bias is removed or a reverse bias is applied. This gate voltage may be momentary, since a continuous gate voltage is not required to assure continued current flow. If you have difficulty understanding the concept of SCR gating please refer back to Module 25 or study an alternate form of this lesson.

Since the gate has turn-on capability only when the SCR is forward biased, once the SCR is conducting the gate no longer has control over the SCR regardless of the gate potential. The SCR is turned off only when it it is reverse biased and the gate has no effect.

The schematics shown in Figure 2 are for a half-wave diode power supply and a half-wave SCR power supply.

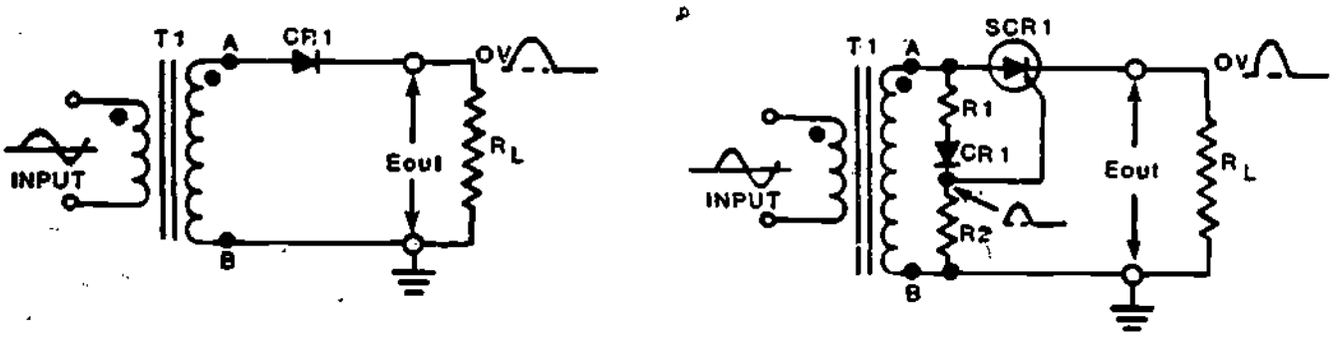


Figure 2

HALF-WAVE DIODE POWER SUPPLY (UNFILTERED)

HALF-WAVE SCR POWER SUPPLY (UNFILTERED)

The SCR power supply is similar to the ordinary diode power supply which you have studied previously. The only difference is that SCRs are used instead of diodes and the SCRs have the capability of controlling the conduction time and the amount of current which ultimately reaches the filter and load. Study the schematics and notice that even though they are essentially identical, several additional components have been added to the SCR power supply. These components, consisting of RI, R2, and CR1, are used to trigger or turn on the SCRs.

SUMMARY
LESSON 3

SCR Power Supply Circuits

A power supply which provides a maximum amount of power output is required for some transmitters, receivers, computers, radar systems and other electronic equipments. The power supply which provides this high current output with a minimum internal power loss is the silcon controlled rectifier (SCR) type power supply.

The symbols for a regular diode and an SCR are shown in Figure 1. These symbols are provided to help you understand the difference between the two components.

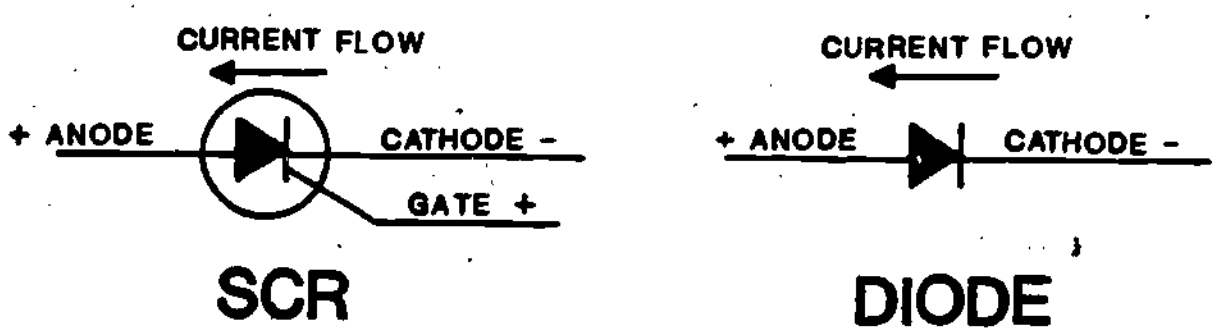


Figure 1

SCHEMATIC SYMBOLS

Both the diode and SCR have a cathode and an anode. However, the SCR has an additional element which is called the gate. The gate provides the triggering or turn-on capability for the SCR.

You already know that neither the diode nor the SCR conduct when they are reversed biased, and therefore block current flow through other components which are connected in series with them.

Figure 4 shows the schematic for a half-wave SCR power supply.

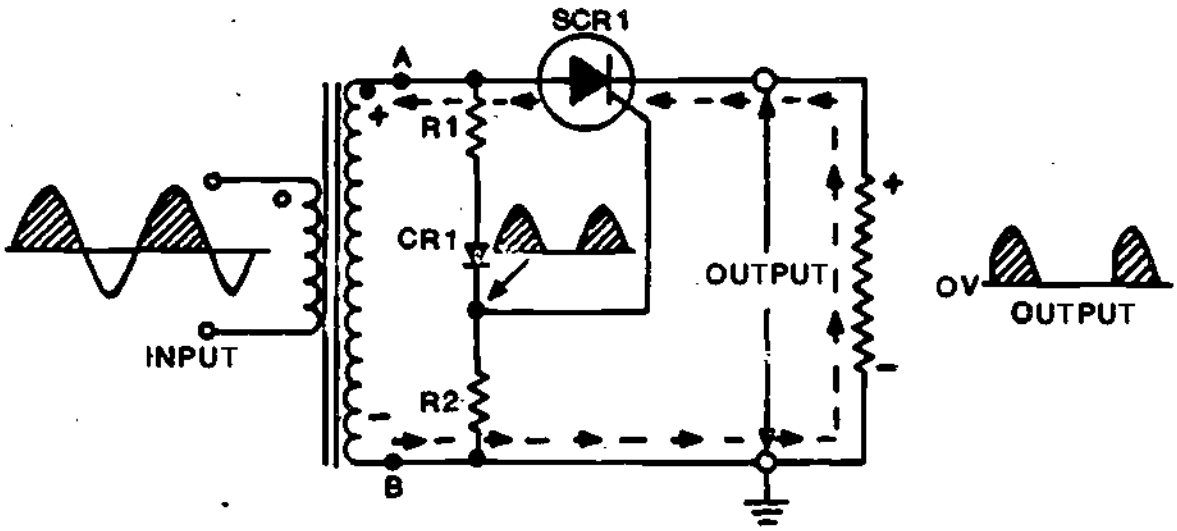


Figure 4

UNFILTERED SCR HALF-WAVE POWER SUPPLY

R1, R2 and CR1 make up a half-wave gating network for the SCR power supply. SCR1 and RL are the half-wave SCR components.

Recall that an SCR will not conduct unless it is forward biased and a positive potential is applied to its gate. Therefore current flows through R1 and R2 only when terminal A of T1 is positive. At this time CR1 is forward biased. When terminal A becomes negative CR1 is reverse biased and current does not flow. Voltage is developed across R2 only during the positive half cycle and the gate triggers the SCR at this time. This means that SCR current can only flow during the positive cycle.

The waveforms shown immediately to the right of the schematic indicate the output of the power supply during positive alternations. Trace the current flow and make sure you understand how this half-wave SCR supply rectifier operates before proceeding further.

Since the gate voltage is dependent on the voltage divider, the firing time of the SCR may be changed by changing the value of the voltage divider resistors. For example, if the resistance of R2 is increased, the gate voltage trigger level on the SCR will be reached sooner, resulting in an earlier SCR turn on. This causes the SCR to conduct for a longer period of time before the positive alternation ends and the SCR again becomes reverse biased. Thus, the output voltage is variable by making R2 a variable resistor.

The waveforms shown in Figure 3 show pictorially how the SCR operates with an AC input.

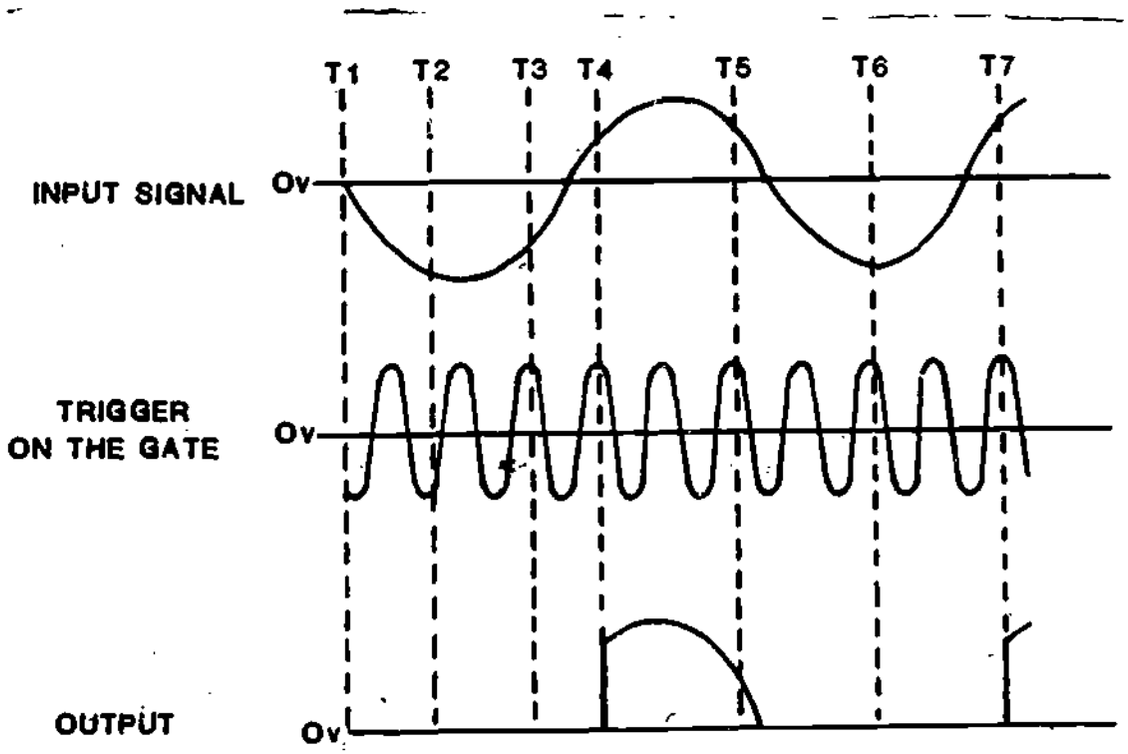


Figure 3

SCR TIMING WAVEFORMS

Notice that as long as the input signal is negative, current cannot flow and consequently there is no output. Even when the input signal becomes positive and the SCR is forward biased, the SCR will not conduct until a positive trigger voltage is applied to the SCR gate. This voltage must equal or exceed the gate or trigger voltage rating of the SCR. SCRs with different trigger voltage ratings are available. Make sure you understand the waveforms shown and the time the SCR conducts and when it stops conducting, before proceeding further with this lesson.

Although half-wave SCR power supplies are seldom used, an understanding of their operation will help you understand how the full-wave SCR power supply operates.

Thus far the explanation has been concerned with one-half of a full-wave SCR rectifier. The schematic shown in Figure 6 represents a full-wave SCR rectifier. Recall that the advantage of full-wave rectification is an output which has twice as many pulses and is therefore easier to filter. The gating networks for the SCRs are shown in shaded blocks.

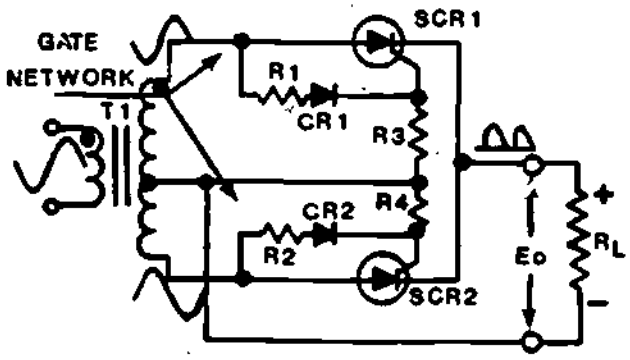


Figure 6

FULL-WAVE SCR POWER SUPPLY

Waveforms shown in Figure 7 illustrate the output of the full-wave SCR rectifier during two complete input cycles. Study the waveforms and schematic shown in Figures 6 and 7 in order to make sure that you understand how the full-wave SCR power supply operates.

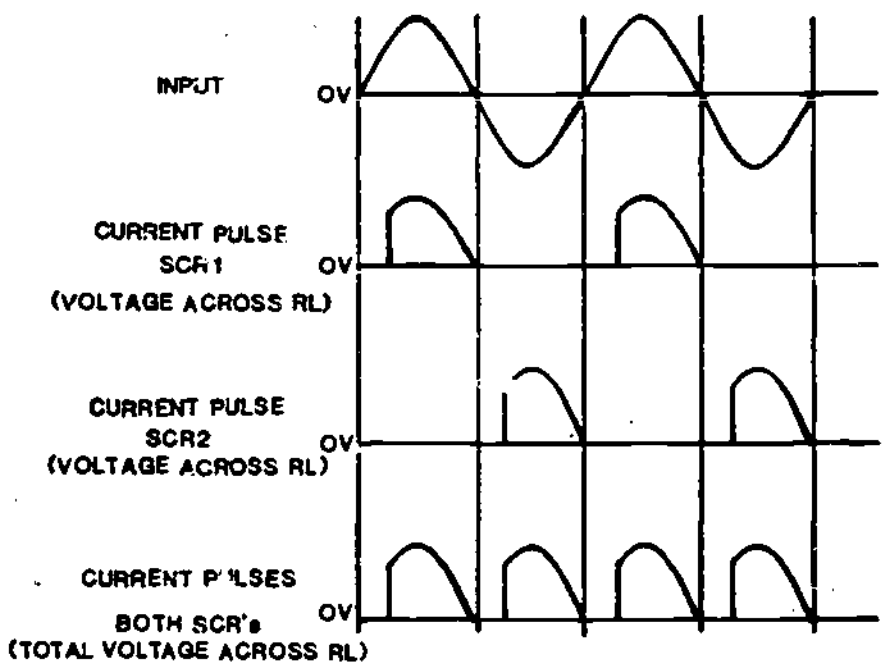


Figure 7

FULL-WAVE SCR RECTIFIER WAVEFORMS

Waveforms shown in Figure 5 illustrate the effect of different resistance values of R2 and the corresponding output of the SCR. Note particularly that a large value of R2 results in an earlier firing time and that the gate potential and the output is only present during the positive input cycle. This is shown by the two waveforms immediately below the input waveform. Study the other waveforms to make sure you understand what happens when R2 has a small value, and a filter is added to the output.

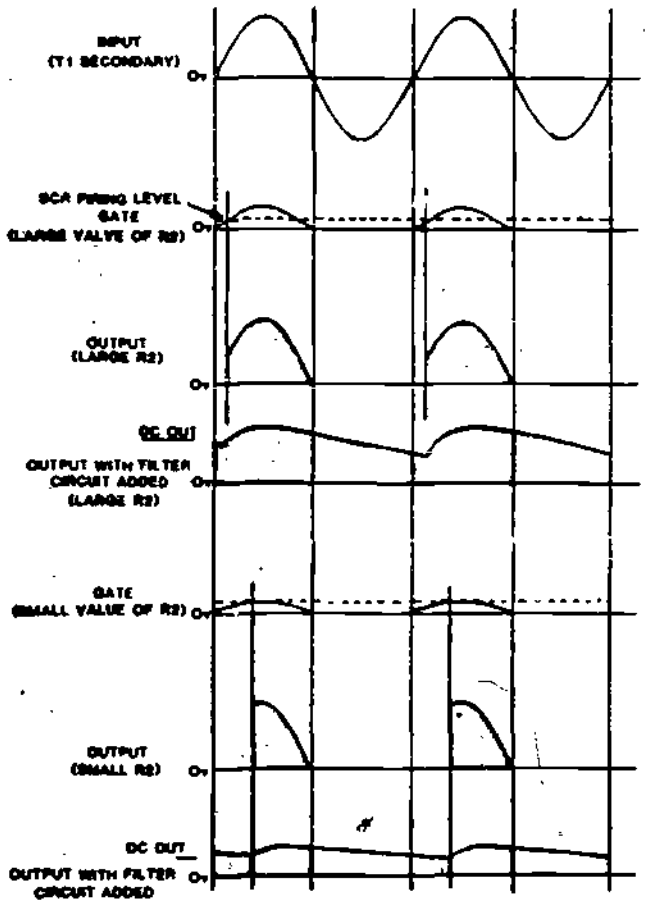


Figure 5

HALF-WAVE SCR WAVEFORMS

The addition of filter components to any of the SCR power supply circuits will provide a smooth DC output voltage, instead of the pulsating voltage shown on many of the output waveforms. Circuit operation remains the same.

AT THIS POINT, YOU MAY TAKE THE LESSON PROGRESS CHECK. IF YOU ANSWER ALL SELF-TEST ITEMS CORRECTLY, YOU MAY TAKE THE LESSON TEST. IF YOU INCORRECTLY ANSWER ONLY A FEW OF THE PROGRESS CHECK QUESTIONS, THE CORRECT ANSWER PAGE WILL REFER YOU TO THE APPROPRIATE PAGES, PARAGRAPHS, OR FRAME SO THAT YOU CAN RESTUDY THE PARTS OF THIS LESSON YOU ARE HAVING DIFFICULTY WITH. IF YOU FEEL THAT YOU HAVE FAILED TO UNDERSTAND ALL, OR MOST, OF THE LESSON, SELECT AND USE ANOTHER WRITTEN MEDIUM OF INSTRUCTION, AUDIO/VISUAL MATERIALS (IF APPLICABLE), OR CONSULTATION WITH LEARNING CENTER INSTRUCTOR, UNTIL YOU CAN ANSWER ALL SELF-TEST ITEMS ON THE PROGRESS CHECK CORRECTLY.

Full-wave SCR power supplies, like full-wave diode power supplies, require a center tapped transformer secondary, and therefore, only half of the transformers secondary potential is utilized at any given time. In order to make full use of the secondary voltage an SCR bridge power supply may be used.

In many respects the SCR bridge power supply is identical to a regular bridge diode power supply. The schematics shown in Figure 8 should acquaint you with the similarities of the two types of power supplies.

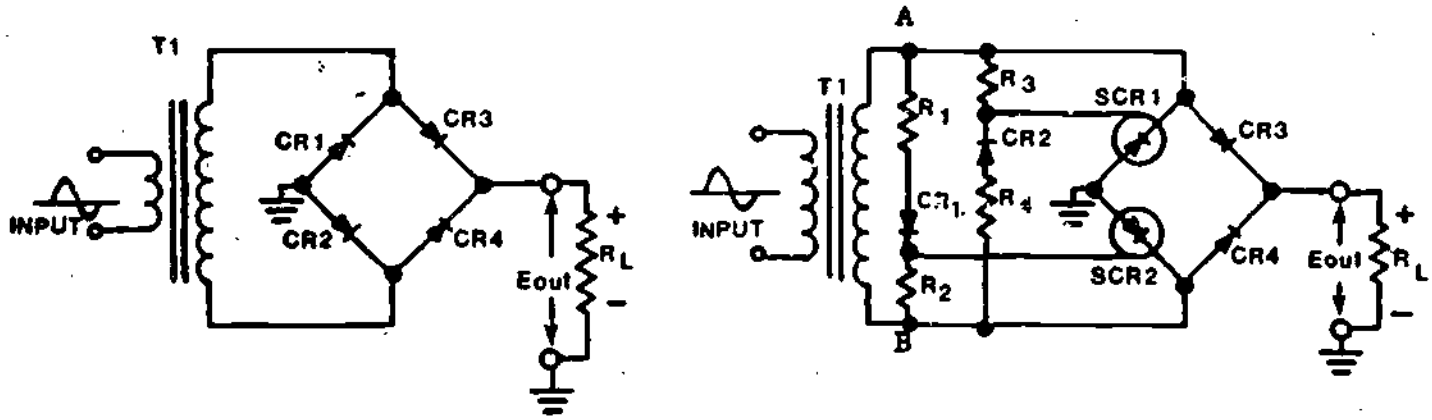


Figure 8

STANDARD DIODE BRIDGE SCR BRIDGE POWER SUPPLY

Notice particularly that the only difference between the two schematics is that the SCR bridge power supply uses two SCRs and gating or triggering networks. Also notice that the SCRs are connected so that one of the SCRs is always in series with the load. Stated in simpler terms, one of the SCRs always controls the load current. It may be advantageous if you trace around the circuit and familiarize yourself with the concept that SCR1 is in series with CR4 and SCR2 is in series with CR3.

When terminal A of T1 is positive, CR1, CR3 and SCR2 are forward biased. This also causes current to flow from terminal B of T1, through R2, CR1, R1 and back to terminal A. No additional current flows at this time due to the fact that SCR2 has not been gated or triggered. When the voltage drop across R2 reaches the firing potential for SCR2, the SCR conducts and current flows from terminal B through SCR2 to ground. The current path to terminal A is thereby completed from ground on the bottom of RL through CR3. This current path exists until the polarity of the voltage across the secondary reverses. When terminal A is negative with respect to terminal B, the action is similar. This secondary voltage polarity will forward bias SCR1, CR4 and CR2. Trace the current paths for this alternation to be sure you understand the SCR bridge power supply.

---

c. high current with low power loss

---

(2.) The symbol shown in Figure 1 is that of an SCR. In addition to the symbol for an SCR, the symbol for a regular diode is also shown. This is to help you understand the difference between the two components. The additional element of the SCR is called a gate. The gate is used to trigger operation of the SCR. This will be discussed in greater detail in subsequent frames.

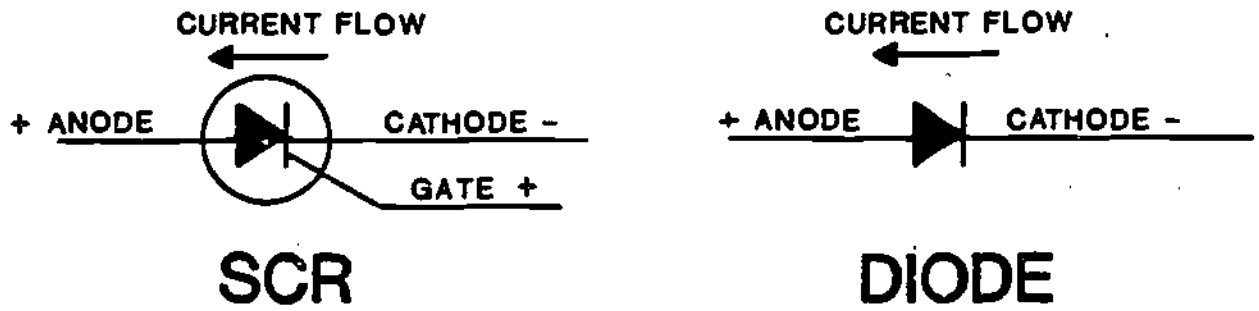


Figure 1

The element which triggers an SCR is called a _____.

---

gate

---

(3.) Besides the advantage of low power consumption, SCR power supplies have the ability to vary conduction time and therefore the amount of current that reaches the filter and load. Whenever the SCR conducts, its resistance is very low and, therefore, there is a limited amount of power loss in the SCRs.

PROGRAMMED INSTRUCTION
LESSON 3

SCR Power Supply Circuits

TEST FRAMES ARE 6, 10, 17, 20, AND 28. PROCEED TO TEST FRAME 6 AND SEE IF YOU CAN ANSWER THE QUESTIONS. FOLLOW THE DIRECTIONS GIVEN AFTER THE TEST FRAME.

1. In Lesson 2 you learned how regulators function to maintain constant voltage and current outputs. You undoubtedly recall that resistors and transistors were used as voltage dropping devices in these circuits and that these voltage dropping devices consume power. Because these voltage dropping devices consume power, less power is available for the circuit load. In other words the power consumed by the voltage dropping device is not available to the equipment load and is therefore wasted power that appears as heat. You already know that some transmitters, receivers, computers, radar systems, electric welding equipment and battery chargers have high power requirements. It is therefore desirable to have some means whereby a maximum amount of power can be provided with a minimum of internal loss. The power supply which provides high current output with a minimum of power loss uses a Silicon Controlled Rectifier or SCR. The SCR power supply circuit has the advantage of high current output and minimum internal power loss.

The main advantage(s) of an SCR power supply is/are:

a. higher voltage output

b. greater load resistance

c. high current with low power loss

d. voltage doubling and current regulation

5. Once a forward biased SCR has been triggered by the application of a positive triggering voltage at the gate, the SCR will continue to conduct even if the gate voltage is removed. The SCR will conduct until the forward bias between the anode and cathode is removed or a reverse bias is applied.

A forward biased SCR will continue to conduct until _____.

a. the gate signal is removed

b. a negative voltage is applied to the gate

c. the forward bias is removed or a reverse bias applied

d. the gate voltage exceeds the SCRs forward bias

---

c. the forward bias is removed or a reverse bias applied

The amount of time that an SCR conducts may be _____.

---

varied

---

(4.) Although SCRs are often used to control alternating current they can also be used to control direct current. The gate signal may be AC or DC providing that the gate voltage is large enough to trigger the SCR into a conducting state. SCRs are available with different triggering or gate voltages. Though in some respects the SCR is identical to a standard diode, there are some significant differences. Neither the diode nor the SCR will conduct when they are reverse biased. In other words they block curent flow through components that are connected in series with them.

The main difference between the diode and the SCR is that a forward biased SCR will not conduct until a positive voltage is applied to the SCR gate terminal. The positive gate voltage may be momentary since a continuous gate voltage is not required to assure current flow in the SCR. Of course once conducting, the SCR will continue to conduct until forward bias is removed or a reverse bias is applied.

A forward biased SCR conducts whenever an adequate

a. negative voltage is applied to the gate

b. positive voltage is applied to the gate

c. positive voltage is applied to the cathode

d. negative voltage is applied to the cathode

---

b. positive voltage is applied to the gate

1. a. 3

   b. 1

   c. 2

2. d. forward biased and an adequate sitive signal applied to the gate

3. a. the forward bias of the SCR is removed

IF YOUR ANSWERS MATCH THE CORRECT ANSWERS, YOU MAY GO TO TEST FRAME 10. OTHERWISE, GO BACK TO FRAME 1 AND TAKE THE PROGRAMMED SEQUENCE BEFORE TAKING TEST FRAME 6 AGAIN.

7. SCR power supplies are very similar to ordinary diode power supplies which you have studied previously. The full-wave SCR power supply differs from a full-wave diode power supply only in the respect that SCRs are used instead of diodes and the SCR has the capability of being able to control the conduction time and the amount of current which ultimately reaches the filter and load. Figure 3 shows the schematics for a full-wave SCR power supply and a full-wave diode power supply.

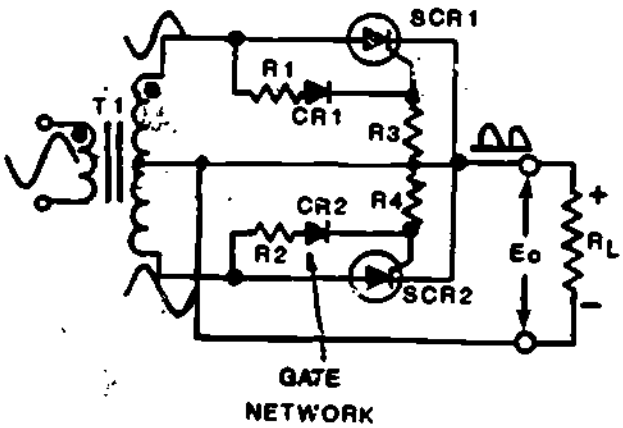


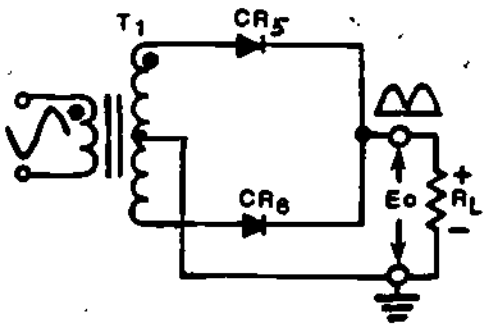


Figure 3

FULL WAVE SCR POWER SUPPLY

FULL WAVE DIODE POWER SUPPLY

6. THIS IS A TEST FRAME. COMPLETE THE TEST QUESTIONS AND COMPARE YOUR ANSWERS WITH THE CORRECT ANSWERS GIVEN AT THE TOP OF THE PAGE FOLLOWING THE TEST QUESTIONS. REFER TO THE SCHEMATIC SYMBOLS SHOWN IN FIGURE 2 IN ORDER TO ANSWER QUESTIONS 1 THROUGH 3.

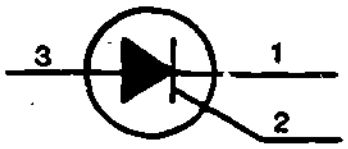


Figure 2

1. Which number identifies the SCR (a) anode _____, (b) cathode _____, (c) gate _____?

2. The SCR will conduct when it is _____.,

   a. forward biased and an adequate negative signal is applied to the gate

   b. forward biased and an adequate negative signal is applied on the cathode

   c. not biased and there is a positive signal on the gate

   d. forward biased and an adequate positive signal is applied to the gate

3. The SCR will stop conducting whenever_____.

   a. the forward bias of the SCR is removed

   b. the gate signal is removed

   c. a negative signal is applied to the gate

   d. the gate signal is increased

COMPARE YOUR ANSWERS TO THE CORRECT ANSWERS GIVEN ON THE NEXT PAGE.

8. Study the waveforms shown in Figure 4. These waveforms depict pictorially how the SCR operates.

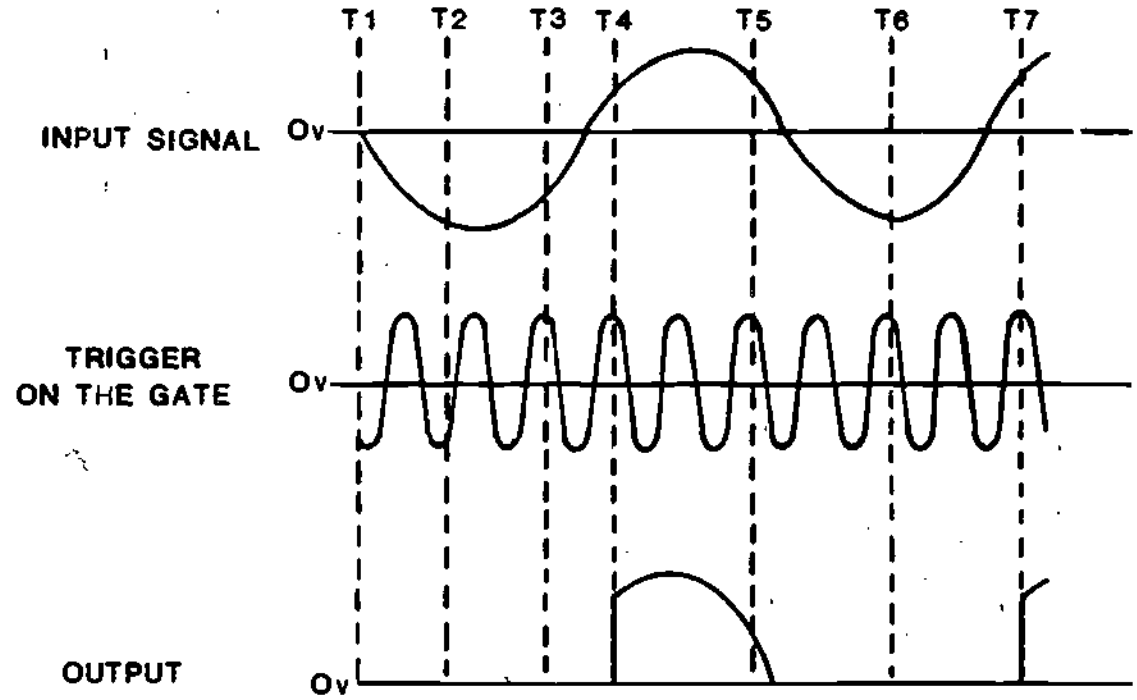


Figure 4

SCR TIMING WAVEFORMS

The waveform at the top of the figure shows the AC input signal. As with all sine waves, the input changes from positive to negative in relation to the zero volt reference. Recall that current flows through an SCR only when the SCR is forward biased and after the SCR is triggered by a positive voltage on the gate. Remember that SCR gate voltages may vary and that SCRs are available with different triggering voltages. The middle waveform in Figure 4 is that of the trigger or gate, and finally the waveform shown at the bottom is for the output. An understanding of the interrelationship of these waveforms will help you understand how the SCR rectifier operates.

Notice that the schematics are essentially identical except additional components have been added to the SCR power supply. SCR 1 and 2 are used in place of the 2 diodes, CR5 and CR6. Two gating networks consisting of R1, R2, R3, R4, CR1 and CR2 are used to trigger the SCRs. This will be discussed in greater detail in subsequent frames.

Components which perform the same basic function as CR5 and CR6 in the full-wave SCR power supply are _____.

---

SCR1 and SCR2 or vice versa

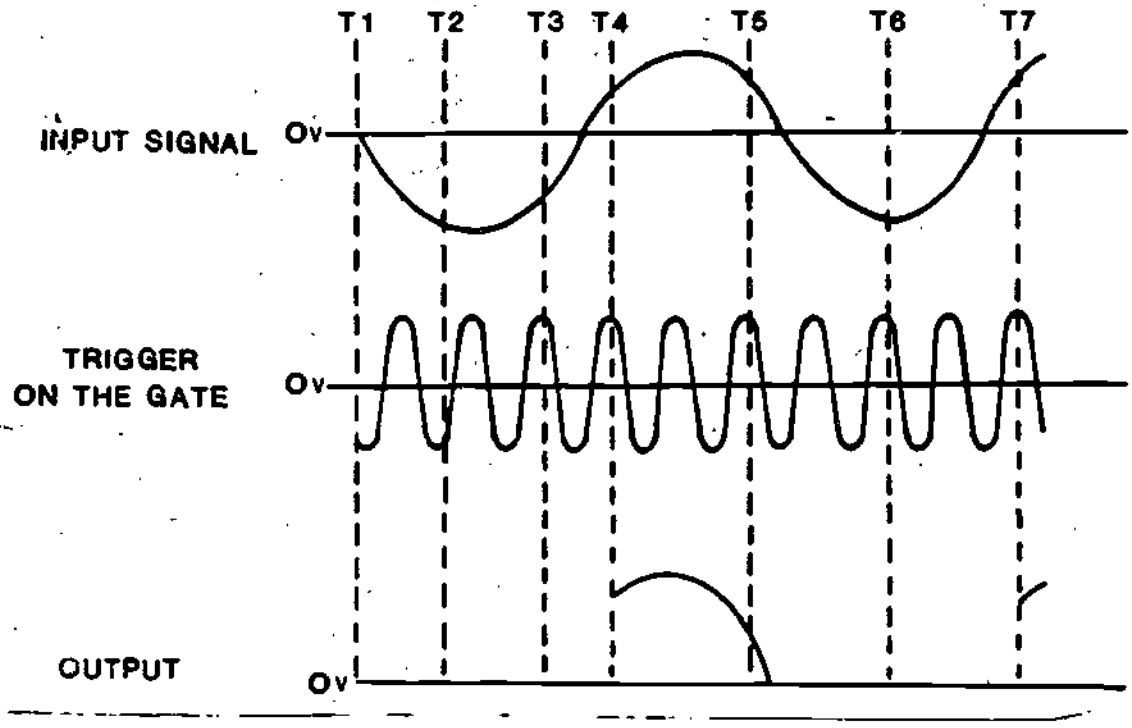


Figure 4

SCR TIMING WAVEFORMS

Refer to the waveforms shown in Figure 4 to answer the following question.

The SCR will provide an output again at time frame

a. T6

b. T7

c. T5

d. None of the above

---

b. T7

The waveforms shown in Figure 4 show that as long as the input signal is negative, no current flows and consequently there is no output. Even when the input signal becomes positive and the SCR is forward biased, the SCR will not conduct until a positive trigger voltage is applied to the SCR gate. This voltage must equal or exceed the gate or trigger voltage rating of the SCR.

Again refer to the waveforms in Figure 4. Notice that the trigger voltage on the gate reaches maximum during time sequence T4. Since the SCR is forward biased, it conducts until the forward bias is removed or a reverse bias is applied.

Notice that the output commenced immediately when the trigger voltage on the gate reached the trigger level and that even though the gate voltage reversed polarity, the SCR continues to conduct until the forward bias reaches zero or the SCR is reverse biased. Study the waveforms shown in the Figure to make sure you understand how the gate triggered the SCR and the relationship between the input signal and output signal. This is absolutely essential to enable you to understand how the SCR power supply works.

(10) THIS IS A TEST FRAME. COMPLETE THE TEST QUESTIONS AND COMPARE YOUR ANSWERS WITH THE CORRECT ANSWERS GIVEN AT THE TOP OF THE PAGE FOLLOWING THE TEST QUESTIONS.

1. Once the SCR conducts it will continue to conduct until
   a. the gate voltage changes to "turn off" the SCR
   b. the gate voltage exceeds the forward bias of the SCR
   c. the SCR is reversed biased
   d. the gate voltage drops to zero
2. The gate of an SCR has the capability of turning the SCR
   a. "on" and "off" regardless of the bias of the SCR
   b. "on" when the SCR is forward biased
   c. "on" or "off" depending upon the gate voltage
   d. "off" when it is reverse biased

9. Recall that a positive voltage on the gate, when the SCR is forward biased, allows current to flow. In effect the gate has start up control over the SCR. Once the SCR begins conducting, the gate loses all control. The SCR continues to conduct until the SCR forward bias is removed or a reverse bias is applied. Once the gate triggers the SCR, control is lost until the SCR goes through the complete cycle of being reversed biased and once again becomes forward biased. At this time the gate again has control. Stated quite simply this means that the gate only has a "turn on" capability.

The gate of a silicon controlled rectifier has control only when the SCR is

a. reversed biased and the gate voltage is positive

b. forward biased and the gate voltage is negative .

c. reverse biased and the gate voltage is both negative and greater than the bias of the SCR

d. forward biased and the gate voltage is positive

---

d. forward biased and the gate voltage is positive

Compare your answers to the correct answers below.

1. c. the SCR is reverse biased
2. b. "on" when the SCR is forward biased
3. b. T4
4. d. T5
5. c. T4 and T7

IF YOUR ANSWERS MATCH THE CORRECT ANSWERS YOU MAY GO TO TEST FRAME 17 OTHERWISE GO BACK TO FRAME 7 AND TAKE THE PROGRAM SEQUENCE BEFORE TAKING TEST FRAME 10 AGAIN.

11. Although half-wave SCR power supplies are seldom used, due to the difficulty of filtering the output, examination of the half-wave SCR power supply will help you to understand how the full-wave SCR power supply operates. The schematic shown in figure 6 is that of one-half of a full-wave SCR power supply.

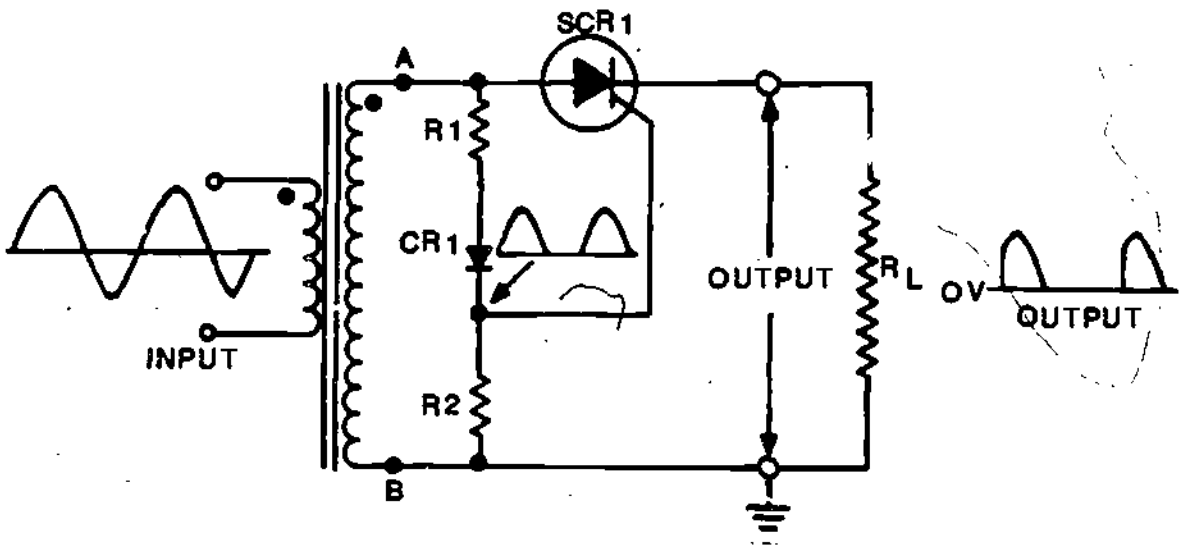


Figure 6

HALF-WAVE SCR POWER SUPPLY

STUDY THE WAVEFORMS SHOWN IN FIGURE 5 IN ORDER TO ANSWER QUESTIONS 3, 4 AND 5.

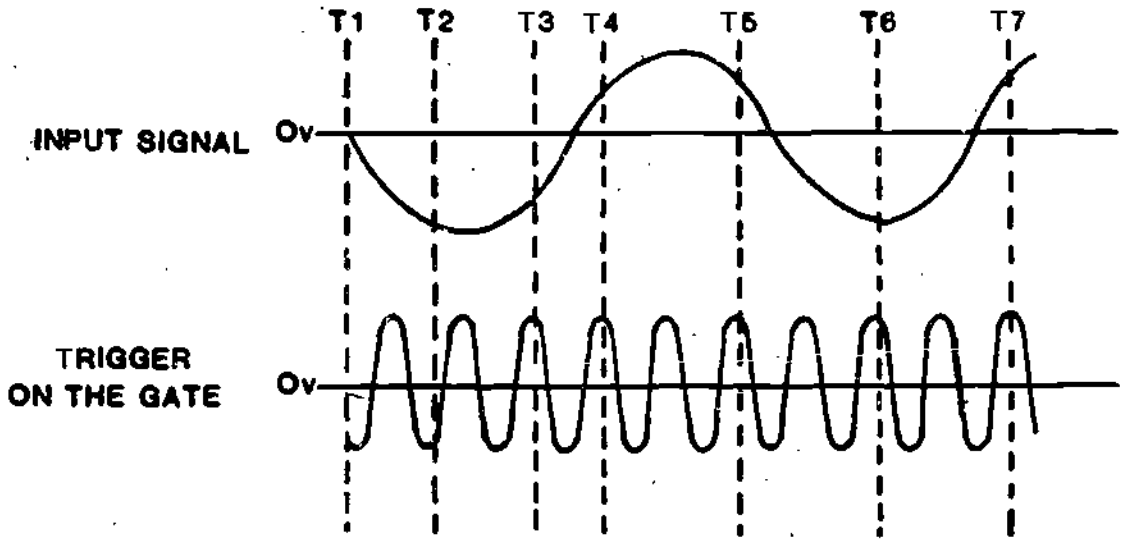


Figure 5

3. The SCR will begin to conduct at time

   a. T1

   b. T4

   c. T6

   d. T2 and T3

4. Once the SCR has been triggered it will continue to conduct until time frame

   a. T3

   b. T4

   c. T6

   d. T5

5. The SCR will conduct starting with time frames

   a. T1 and T5

   b. T2 and T6

   c. T4 and T7

   d. T1 and T6

Using Figure 8 as a reference and assuming that R1 and R2 are equal, when the peak voltage of terminal A is 100 volts, what is the waveform present at the top of R2 through two complete cycles?


Figure 8

---

b

---

(13.) Recall that once an SCR is forward biased it conducts, when a positive voltage is applied to the gate. In other words, the gate fires the SCR. Remember also that once the SCR starts to conduct it continues to conduct as long as it remains forward biased. Study the schematic shown in Figure 9 and notice that the SCR is forward biased during each positive alternation, when terminal A is positive with respect to terminal B.

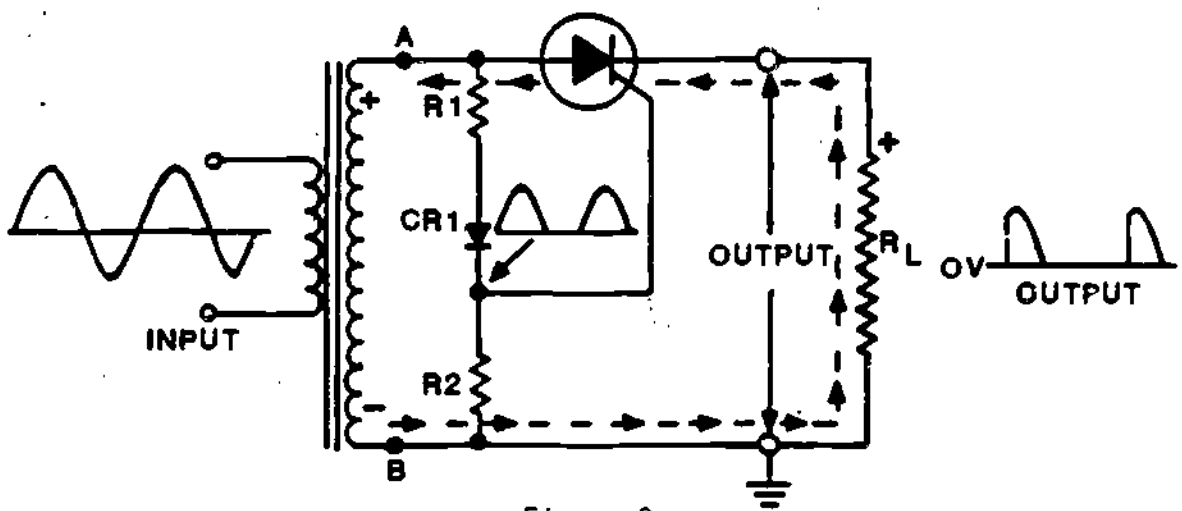


Figure 9

HALF-WAVE SCR POWER SUPPLY

The gating network for this power supply is made up of R1, R2, and CR1. If you do not recall how half-wave rectifiers operate using regular diodes, refer back to the lessons concerning half-wave rectifiers. When terminal A of T1 is positive, CR1 is forward biased; therefore, current is allowed to flow through R1 and R2. During the second half of the input cycle when terminal A is negative, CR1 is reverse biased and no current is allowed to flow through the resistors. Voltage is developed across R2 only during the positive half cycle. This voltage is applied to the gate of the SCR and triggers the SCR.

During the negative input cycle when terminal A of T1 becomes negative, CR1 is _____ (reverse/forward) biased and _____ (will/will not) allow current to flow through R1 and R2.

---

reverse, will not

---

(12.) Again refer to the schematic shown in Figure 6. When R1 and R2 are of equal value, a peak voltage at terminal A of 100 volts will result in the waveform shown in Figure 7, taken at the top of R2 through two complete cycles. This voltage is used to trigger SCR1.

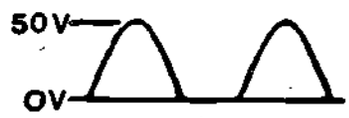


Figure 7

GATE TRIGGER WAVEFORMS

(15) The waveform shown in Figures 10 and 11 illustrate the effect of different resistance values of R2 and the corresponding output of the SCR. Notice that a large value of R2 results in an earlier firing time and that the output is present only during the forward biased positive input cycle. This is reflected by the waveforms 2 and 3 immediately below the input waveform.

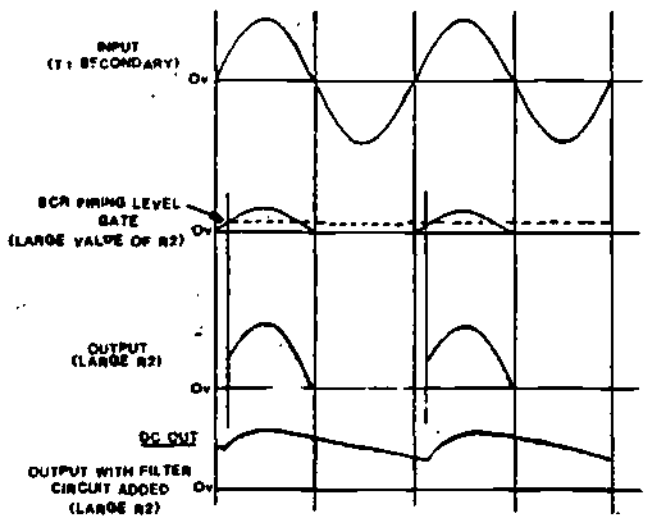


Figure 10

HALF-WAVE SCR RECTIFIER WAVEFORMS

In order to cause the SCR to fire earlier it is necessary to

a. increase the resistance of R1

b. decrease the resistance of RL

c. increase the resistance of R2

d. equalize the resistance of R1 and R2

---

c. increase the resistance of R2

Simultaneous with this, a positive signal is present at the rectifier's gate. When the gate triggers the SCR, current flows from terminal B through RL and the SCR to terminal A. This causes a voltage drop across RL that is positive at the junction of RL and the SCR.

Current can flow in the SCR

a. whenever terminal A is positive

b. during the negative alternation only

c. as long as the SCR is forward biased and a negative voltage is applied to the gate

d. only as long as a positive voltage is applied to the gate

---

a. whenever terminal A is positive

---

(14.) Because the magnitude of the gate voltage is dependent on the voltage divider R1 and R2, the firing time of the SCR may be changed by changing the values of the voltage dividing resistors. For example, if the resistance of R2 is increased, the gate turn-on voltage for the SCR will be reached sooner and SCR will be turned "on" earlier. This will result in the SCR conducting longer before the positive alternation ends and the SCR becomes reverse biased. The amount of power output may also be varied by making R2 a variable resistor.

Increasing the resistance of R2 causes the SCR's gate voltage to reach turn-on potential

a. later

b. sooner

c. has no effect

d. cannot tell unless information concerning the forward bias of the SCR is available

---

b. sooner

(16) The waveforms shown in Figure 11 indicates what happens when the value of R2 is reduced.

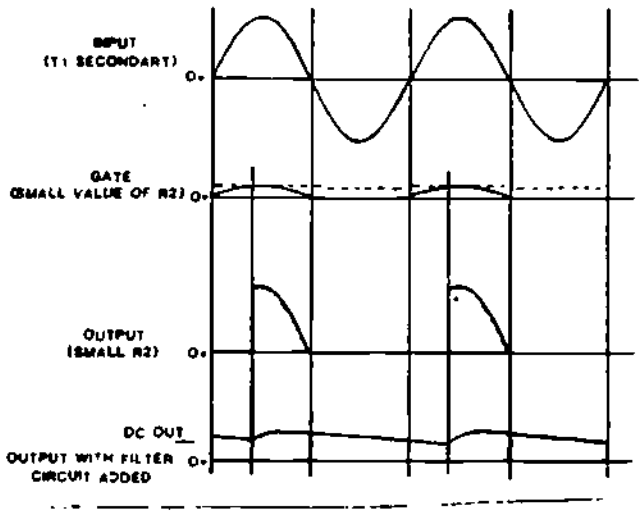


Figure 11

HALF-WAVE SCR RECTIFIER WAVEFORMS

Reducing the value of R2 delays the time when the gate is sufficiently positive to turn "on" the SCR. In this case the SCR is turned "on" approximately midway in the positive sine wave cycle and current flows for about one-half the time of the positive alternation.

Reducing the value of R2

a. delays the triggers or turn-on time

b. accelerates the trigger or turn-on time

c. has no effect on the triggering capability of the gate

d. only effects the output voltage

---

a. delays the trigger or turn-on time

# DON'T GET TURNED ON

## PLAY IT COOL WITH ELECTRICITY

IDEA CONTRIBUTED BY
SM3 A. V. PEREIDA
USS HALSEY, DLG 23

REFER TO THE WAVEFORMS SHOWN IN FIGURE 13 WHEN ANSWERING QUESTIONS 3 THROUGH 5.

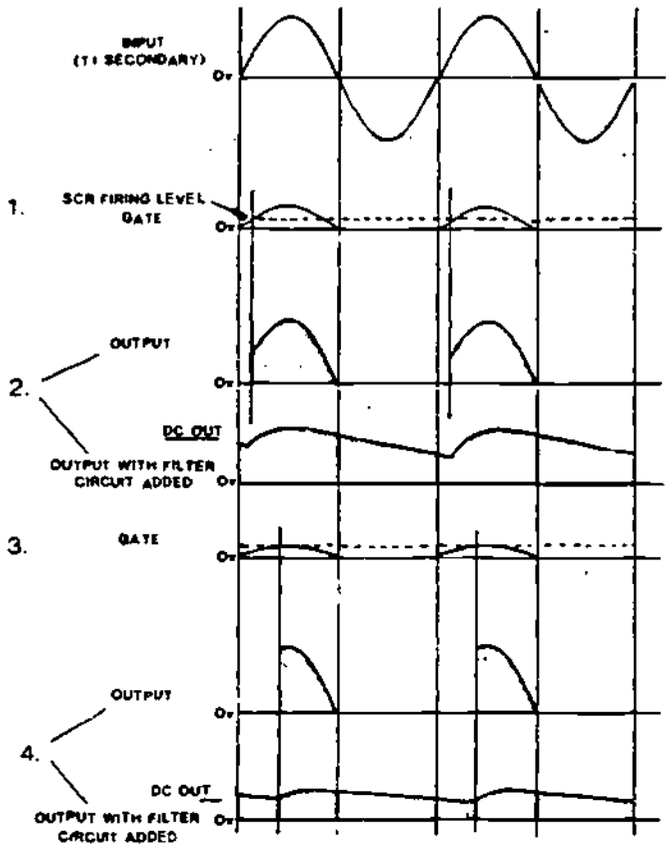


Figure 13

HALF-WAVE SCR RECTIFIER WAVEFORMS

3. Which waveform indicates the SCR firing level when R2 has a large resistance value?

a. 1

b. 2

c. 3

d. 4

(17) THIS IS A TEST FRAME, COMPLETE THE TEST QUESTIONS AND COMPARE YOUR ANSWERS WITH THE CORRECT ANSWERS GIVEN AT THE TOP OF THE PAGE FOLLOWING THE TEST QUESTIONS. REFER TO THE DIAGRAM SHOWN IN FIGURE 12 IN ORDER TO ANSWER QUESTIONS 1 AND 2.

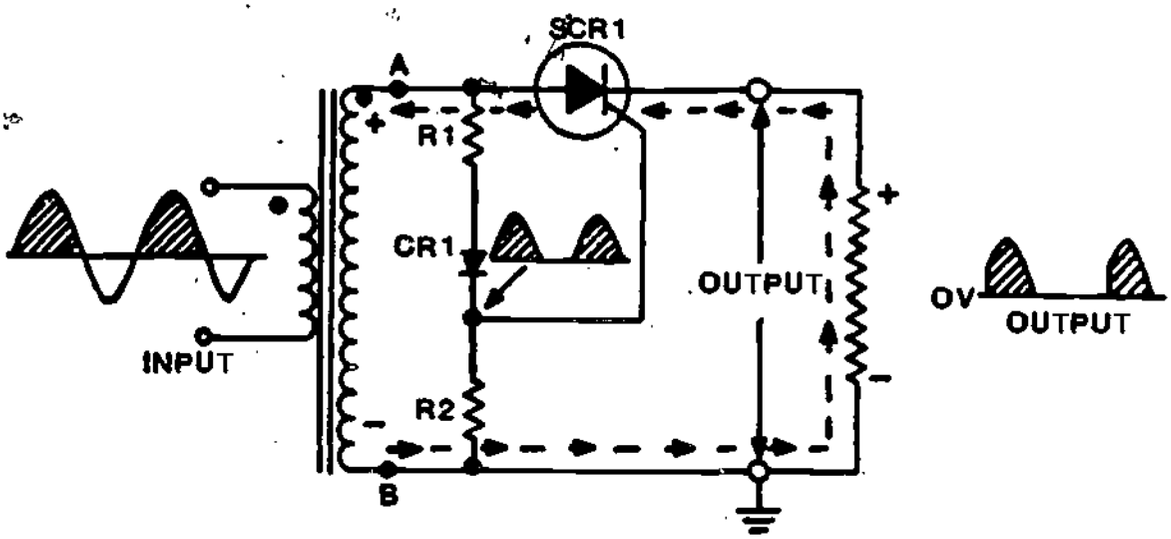


Figure 12

HALF-WAVE SCR RECTIFIER

1. Increasing the value of R2 will cause the SCR to trigger

   a. later

   b. sooner

   c. will have no effect

   d. cannot tell based upon information given

2. If the resistance of R2 is decreased, the output voltage of this half-wave power supply

   a. increases

   b. decreases

   c. remains the same

   d. cannot be determined from information given

1. b
2. b
3. 1
4. 3
5. 2

IF YOUR ANSWERS MATCH THE CORRECT ANSWERS YOU MAY GO TO TEST FRAME 20 OTHERWISE GO BACK TO FRAME 11 AND TAKE THE PROGRAMMED SEQUENCE BEFORE TAKING TEST FRAME 17 AGAIN.

18. Up to this point the explanation has been concerned with one-half of a full-wave SCR rectifier. The schematic shown in Figure 14 represents a full-wave SCR rectifier. The advantage of this circuit is that the output has twice as many pulses as that of the half-wave rectifier which was previously explained, and it is easier to filter. Output waveforms are shown for filtered and unfiltered outputs.

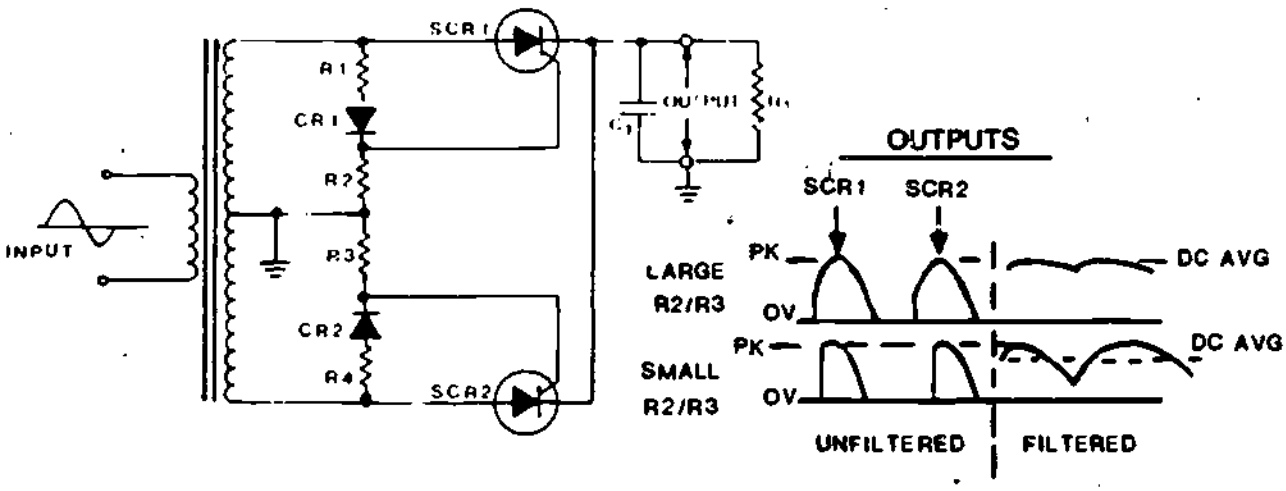


Figure 14

FULL-WAVE SCR RECTIFIERS

4. Which waveform shows the SCR firing level when R2 has a small resistance value?

   a. 1

   b. 2

   c. 3

   d. 4

5. Which waveform shows the output with a large resistance for R2?

   a. 1

   b. 2

   c. 3

   d. 4

COMPARE YOUR ANSWERS TO THE CORRECT ANSWERS GIVEN AT THE TOP OF THE NEXT PAGE.

Decreasing the resistance of R2 and R3 will cause the SCRs to _____.

a. fire sooner

b. have no effect on the firing time

c. fire later

d. increase the output of the rectifier

---

c. fire later

---

(20) THIS IS A TEST FRAME. COMPLETE THE TEST QUESTIONS AND COMPARE YOUR ANSWERS WITH THE CORRECT ANSWERS GIVEN AT THE TOP OF THE PAGE FOLLOWING THE TEST QUESTIONS.

REFER TO THE SCHEMATIC SHOWN IN FIGURE 16 WHEN ANSWERING QUESTION 1.

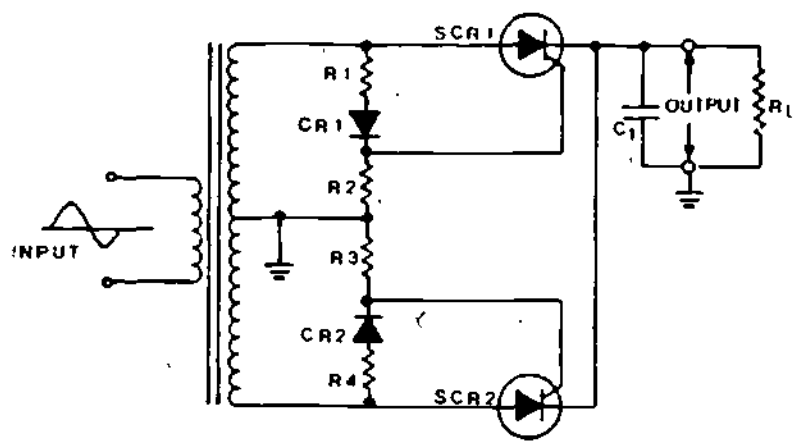


Figure 16

1. Decreasing the value of R2 and R3 resulting in _____ in the average DC voltage across RL.

a. a decrease

b. an increase

c. no change

d. none of the above

177

no response required

(19.) The waveforms shown in Figure 15 indicate the output of the full-wave SCR rectifier during complete input cycles. Notice that with such a rectifier, there is a voltage across the load during each alternation of the sine-wave input. The bottom waveform shows the total output of the SCR through two complete cycles.

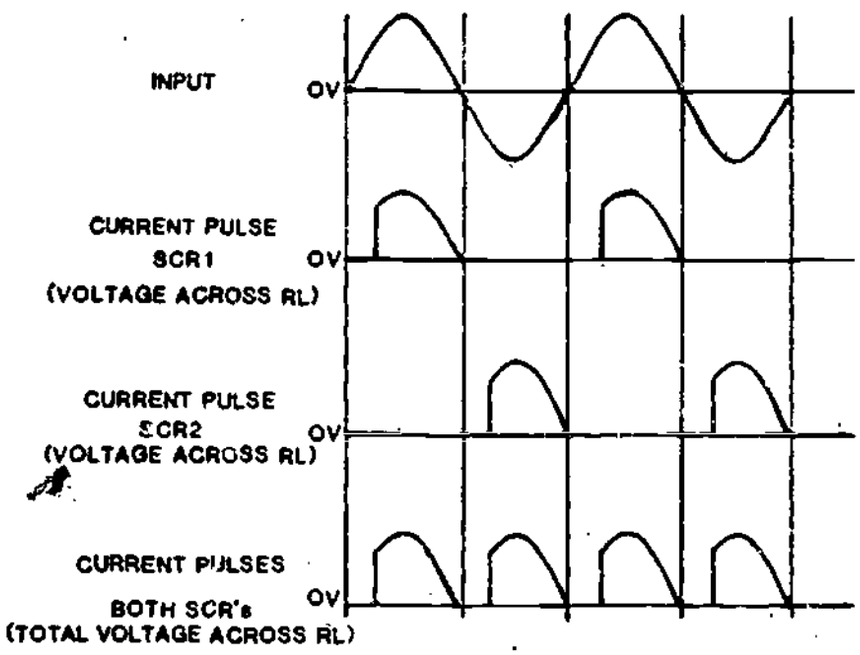


Figure 15

FULL-WAVE SCR RECTIFIER OUTPUT

Recall that changing the values of R2 and R3 will change the firing or triggering time of the SCRs. If the resistance of these two resistors is increased, the firing time will be earlier in the input cycle and the output voltage will be increased.

1. a. a decrease

2. d. all of the above

3. b. 2

IF YOUR ANSWERS MATCH THE CORRECT ANSWERS, YOU MAY GO TO TEST FRAME 28. OTHERWISE GO BACK TO FRAME 18 AND TAKE THE PROGRAMMED SEQUENCE BEFORE TAKING TEST FRAME 20 AGAIN.

21. Recall that a full-wave SCR power supply like the full-wave diode power supply requires a center-tapped transformer secondary and therefore it utilizes only half of the transformer's secondary potential at any given time. To make full use of the secondary voltage, an SCR bridge power supply may be used. The SCR bridge power supply in many ways is identical with a regular bridge diode power supply which you have previously studied. Figure 18 shows schematics for a standard diode bridge power supply and an SCR bridge power supply. Spend some time acquainting yourself with the similarities of the two types of power supplies before proceeding.

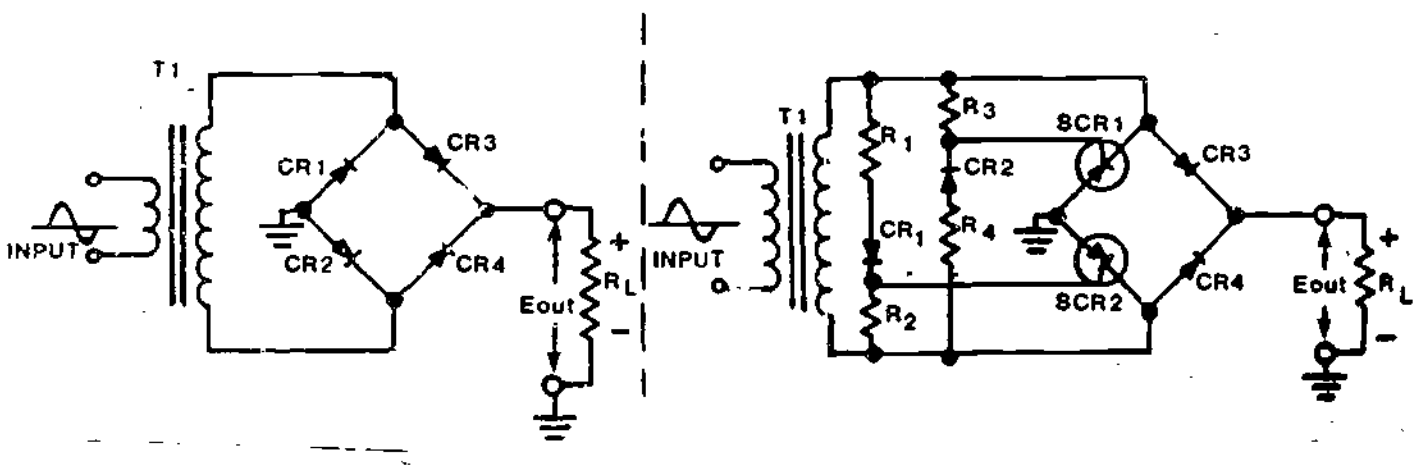


Figure 18

179

STANDARD DIODE BRIDGE SCR BRIDGE POWER SUPPLY

STUDY THE WAVEFORMS SHOWN IN FIGURE 17 IN ORDER TO ANSWER QUESTIONS 2 AND 3.

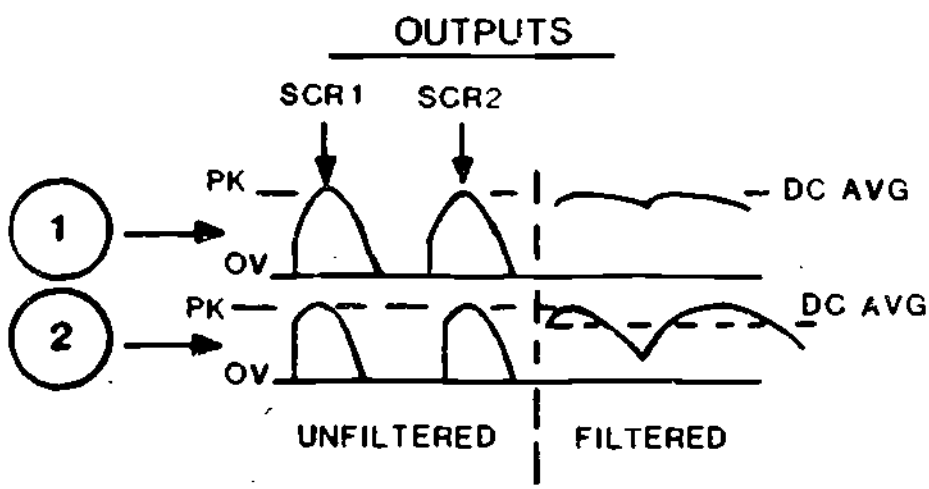


Figure 17

2. The amount of output ripple is determined by _____

   a. the triggering voltage of the SCR gates

   b. the conduction time of the SCRs

   c. the different values of R2 and R3

   d. all of the above

3. Which waveforms represent the output when the value of R2 and R3 is small _____.

   a. 1

   b. 2

COMPARE YOUR ANSWERS TO THE CORRECT ANSWERS GIVEN AT THE TOP OF THE NEXT PAGE.

(23.) Refer to the SCR bridge power supply schematic shown in Figure 19.

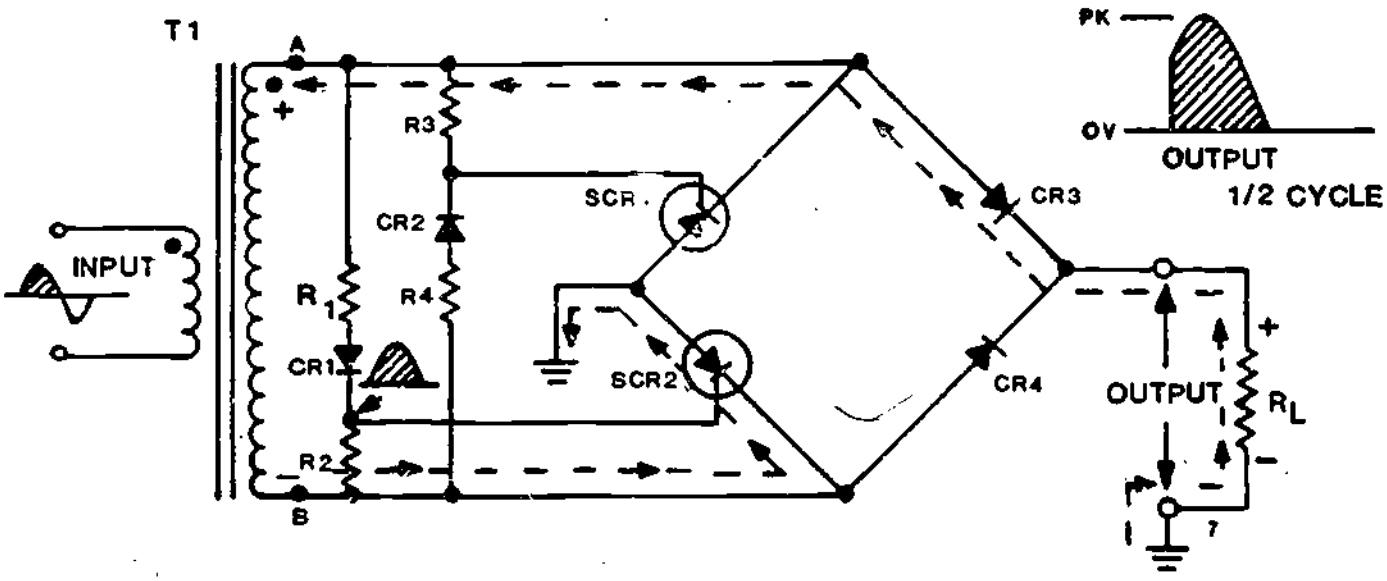


Figure 19

SCR BRIDGE POWER SUPPLY

Notice that only two SCRs are used and that they are connected in such a way that one of the SCRs is always in series with the load. This eliminates the need for 4 SCRs. In other words, one of the SCRs always controls the load current. It may be helpful to trace around the circuit in order to familiarize yourself with the concept that SCR1 is in series with CR4 and SCR2 is in series with CR3.

---

no response required

A bridge type SCR power supply

a. makes full use of the secondary voltage

b. has high voltage output capacity available without using a higher voltage transformer

c. has no advantage over a regular full-wave power supply

d. both a and b

---

d. both a and b

---

(22.) Refer again to the schematics shown in Figure 18. Notice that the only difference between these two schematics is that the SCR bridge power supply uses two SCRs and gating or triggering networks.

SCR 1 and SCR 2 replace diodes_____ and _____ in the standard diode bridge power supply.

---

CR1 and CR2 or vice versa

---

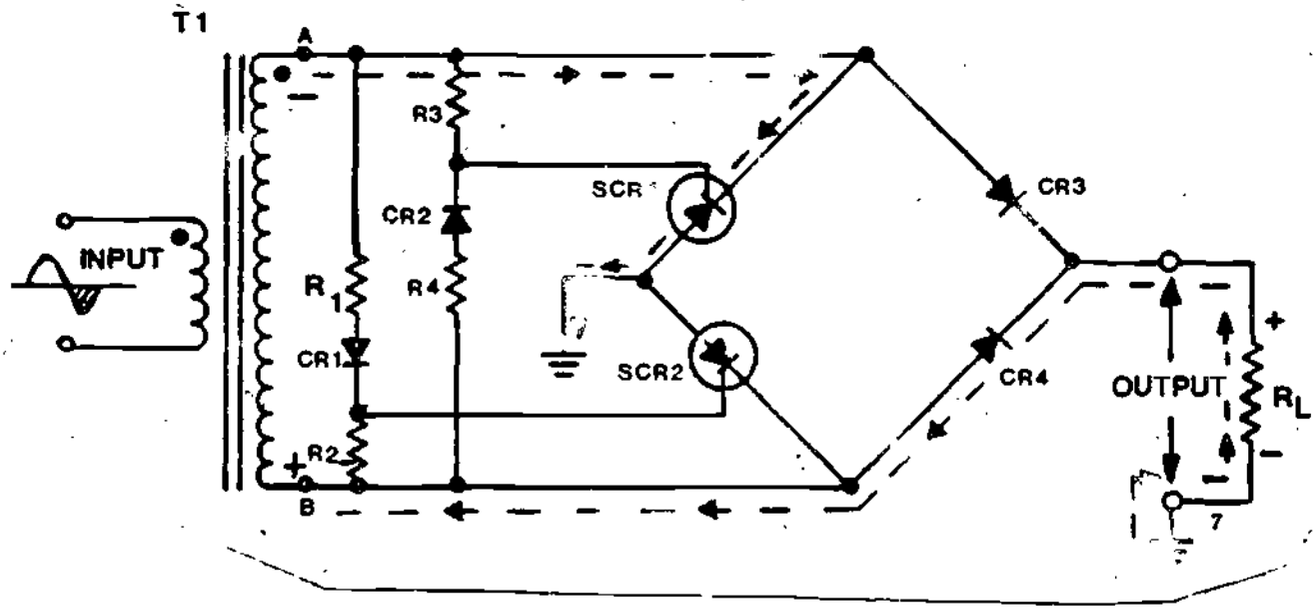


Figure 19

SCR BRIDGE POWER SUPPLY

Refer to Figure 19 above for Frame 25.

25. Now, when terminal A is negative on the next alternation the following action takes place. Initially, CR2 is forward biased, and current flows from terminal A through R3, CR2 and R4 to terminal B. When the voltage across R3 becomes large enough, the gate voltage for SCR1 will reach the firing level. Since SCR1 is forward biased (cathode negative with respect to anode) a path for current is established from terminal A, through SCR1 to ground, from ground on the bottom of RL, through CR4 (forward biased) to terminal B.

---

no response required

24. Again refer to the schematic shown in Figure 19. To help you understand the operation of this SCR bridge rectifier, current paths have been indicated with broken lines. At such time as terminal A of T1 is positive, CR1 will be forward biased. This means that current flows from terminal B of T1 through R2, CR1 and R1 back to terminal A. No other current can flow until SCR2 has been gated or triggered. When the voltage drop across R2 rises to the firing potential for SCR2, the SCR conducts and current will flow from terminal B through SCR2 to ground. The current path to terminal A is thereby completed from ground on the bottom of RL and through CR3. This current path exists until the polarity of the voltage across the secondary reverses.

During the half cycle when terminal A is positive, which diodes are conducting?

a. CR1, CR2, SCR1

b. CR2, CR4, SCR2

c. CR1, SCR2, CR3

d. CR2, SCR2, CR3

---

c. CR1, SCR2, CR3

(27.) The input output waveforms for the SCR bridge type power supply previously discussed are shown in Figure 21. Study the output waveform and notice the wide range of outputs which are possible due to the variation of signals by changing the setting of R2 and R3. (Variations shown shaded)

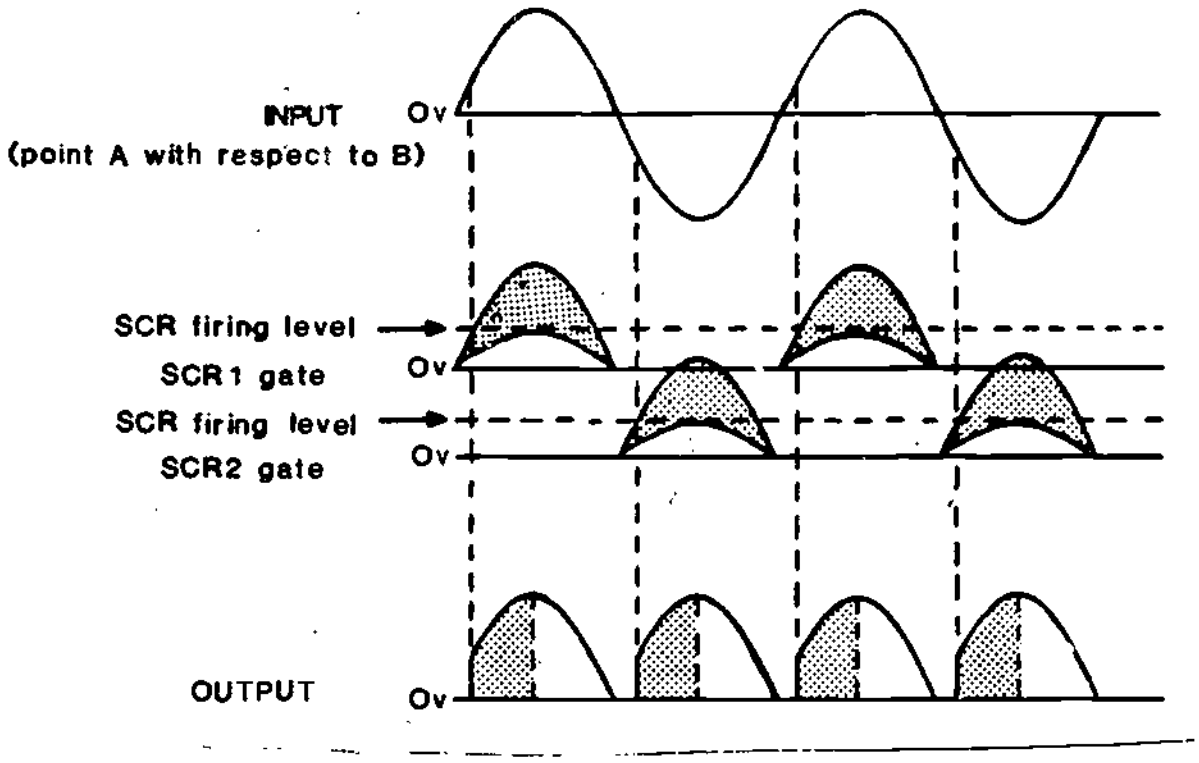


Figure 21

SCR BRIDGE POWER SUPPLY WAVEFORM

(26.) The schematic shown in Figure 20 is also for an SCR bridge power supply. The only difference is R2 and R3 have been replaced with variable resistors. In this case the resistors are mechanically coupled or ganged.

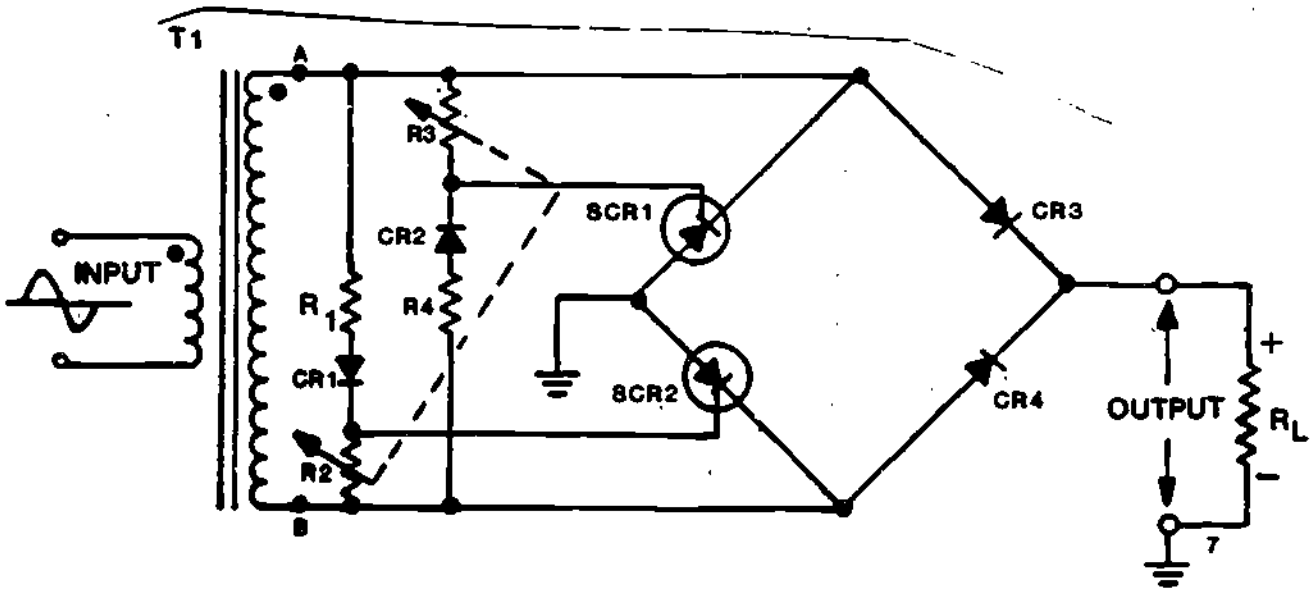


Figure 20

SCR BRIDGE POWER SUPPLY

Because the gating voltages may be changed or modified as a result of changing the values of R2 and R3, the power supply output voltage may be varied to any desired value within the circuit capability merely by rotating the control.

The power supply output voltage may be changed by _____.

---

changing the value of R2 and R3 by rotating the control or something to that effect.

1. c. both a and b

2. changing the value of R2 and R3 by rotating the control or something to that effect.

IF YOUR ANSWERS MATCH THE ANSWERS GIVEN ABOVE YOU HAVE COMPLETEO THE PROGRAMMEO INSTRUCTION FOR LESSON 3, MOOULE 30 -- CONGRATULATIONS! IF YOUR ANSWERS DO NOT MATCH, GO BACK TO FRAME 21 ANO TAKE THE PROGRAMMED SEQUENCE BEFORE TAKING TEST FRAME 28 AGAIN.

AT THIS POINT, YOU MAY TAKE THE LESSON PROGRESS CHECK. IF YOU ANSWER ALL SELF-TEST ITEMS CORRECTLY, YOU MAY TAKE THE LESSON TEST. IF YOU INCORRECTLY ANSWER ONLY A FEW OF THE PROGRESS CHECK QUESTIONS, THE CORRECT ANSWER PAGE WILL REFER YOU TO THE APPROPRIATE PAGES, PARAGRAPHS, OR FRAMES SO THAT YOU CAN RESTUDY THE PARTS OF THIS LESSON YOU ARE HAVING DIFFICULTY WITH. IF YOU FEEL THAT YOU HAVE FAILED TO UNDERSTAND ALL, OR MOST, OF THE LESSON, SELECT AND USE ANOTHER WRITTEN MEDIUM OF INSTRUCTION, AUDIO/VISUAL MATERIALS (IF APPLICABLE), OR CONSULTATION WITH LEARNING CENTER INSTRUCTOR, UNITL YOU CAN ANSWER ALL SELF-TEST ITEMS ON THE PROGRESS CHECK CORRECTLY.

no response required

(28.) THIS IS A TEST FRAME. COMPLETE THE TEST QUESTIONS AND COMPARE YOUR ANSWERS WITH THE CORRECT ANSWERS GIVEN AT THE TOP OF THE PAGE FOLLOWING THE TEST QUESTIONS.

1. A bridge type power supply _____.

   a. has a high voltage output capacity available

   b. makes full use of the transformers secondary voltage

   c. both a and b

   d. has no advantage over a regular full wave power supply.

REFER TO THE SCHEMATIC SHOWN IN FIGURE 22 IN ORDER TO ANSWER QUESTION 2.

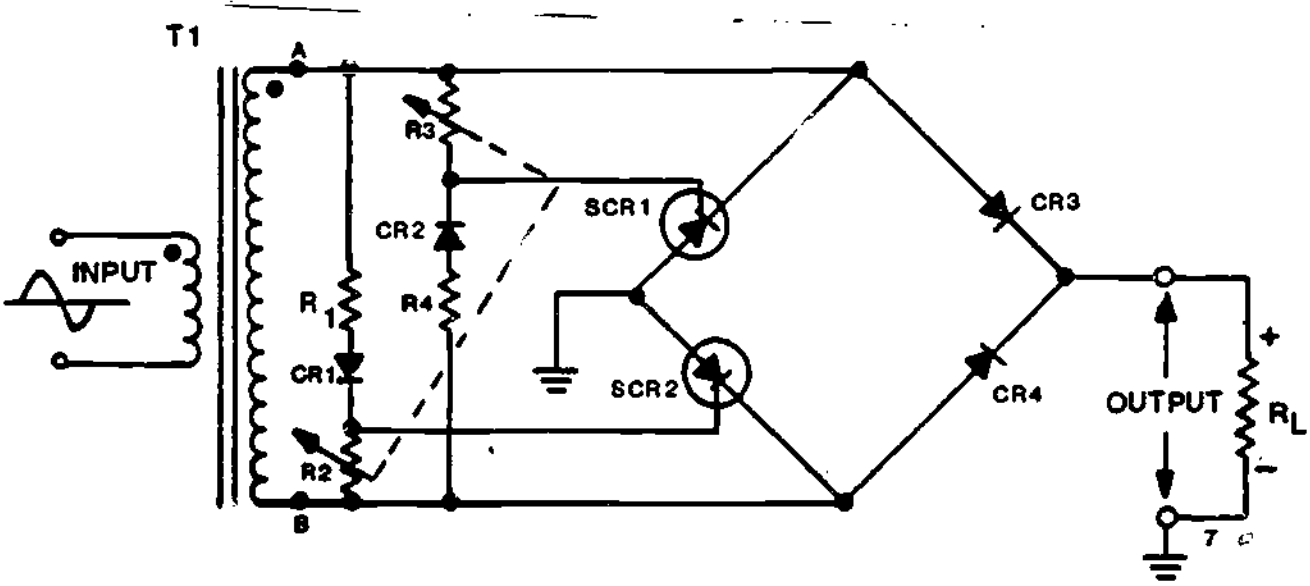


Figure 22

SCR BRIDGE POWER SUPPLY

2. The bridge power supply output voltage may be changed by _____

In order to fully understand the SCR power supply, it is necessary to understand the difference between SCRs and other diodes. Although both continue conducting when forward biased, the SCR will not begin conducting until an adequate positive voltage is applied to its gate.

This voltage may be momentary since a continuous gate voltage is not necessary to assure continued current flow. Once triggered, or gated, the SCR will continue to conduct even when the gate voltage is removed. However, different SCR types trigger at different gate voltages.

The timing waveforms shown in Figure 2 illustrate when the SCR conducts in a half-wave SCR circuit.

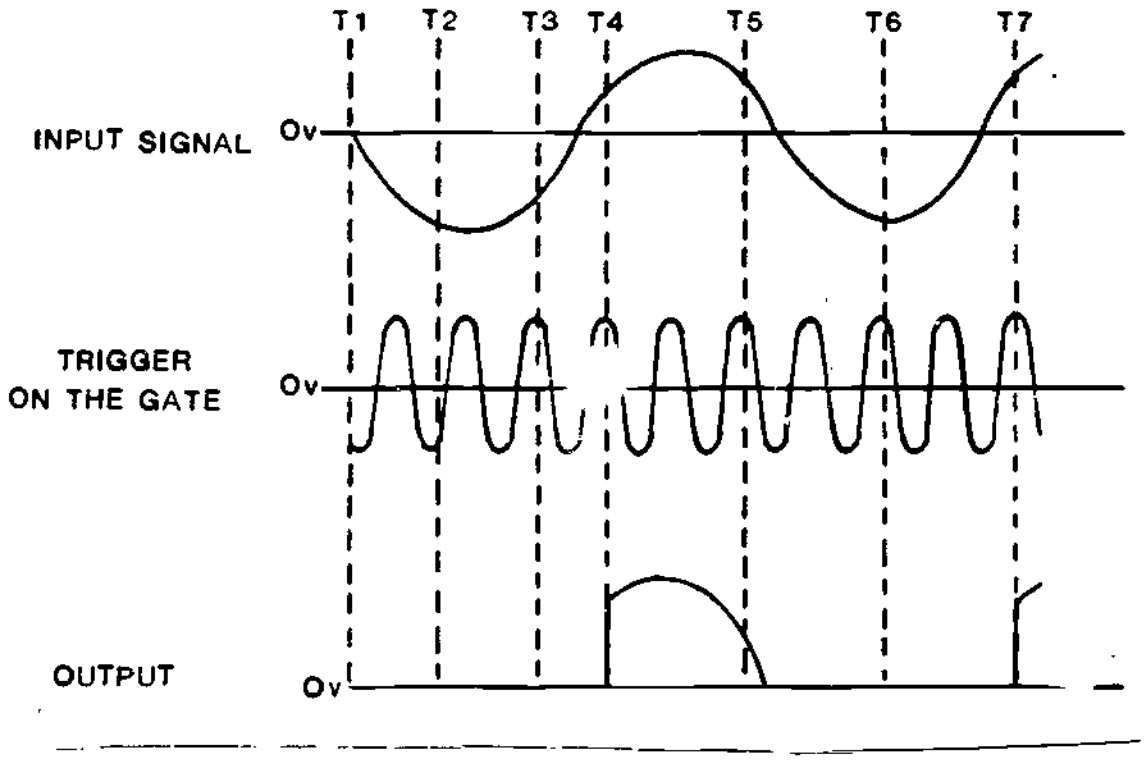


Figure 2

TIMING WAVEFORMS

NARRATIVE
LESSON 3

## SCR Power Supply Circuits

In lesson 2, you learned how regulators function to maintain constant voltage and current outputs. Recall that resistors and transistors were used as voltage dropping devices in these circuits and that these voltage dropping devices consume power. Because voltage dropping devices consume power, this power is not available for the circuit load. It is therefore desirable to have circuits where a maximum amount of power is provided with a minimum of internal power loss. The power supply which provides high current output and a minimum of internal power loss is the Silicon Controlled Rectifier (SCR) power supply.

Beside the advantage of low power consumption, the SCR power supply may be designed to vary SCR conduction time and therefore the amount of current that reaches the filter and load.

The symbol shown in Figure 1 is that of an SCR.

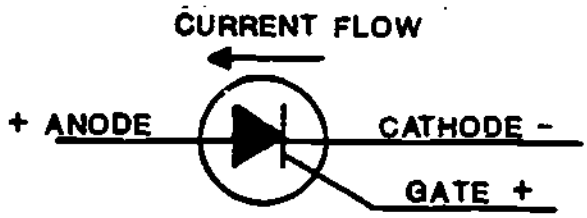


Figure 1

SILICON CONTROLLED RECTIFIER (SCR)

In some respects both the diode and SCR are identical. Both have a cathode and anode and both conduct when forward biased and stop conducting when forward bias is removed.

The SCR has one additional element which is called the gate. This element triggers or turns the SCR "on" when a predetermined positive voltage is applied, and the SCR is forward biased.

Both full-wave and bridge SCR power supplies operate in the same way as regular diode power supplies. The difference exists because of the triggering or gating capability of the SCR.

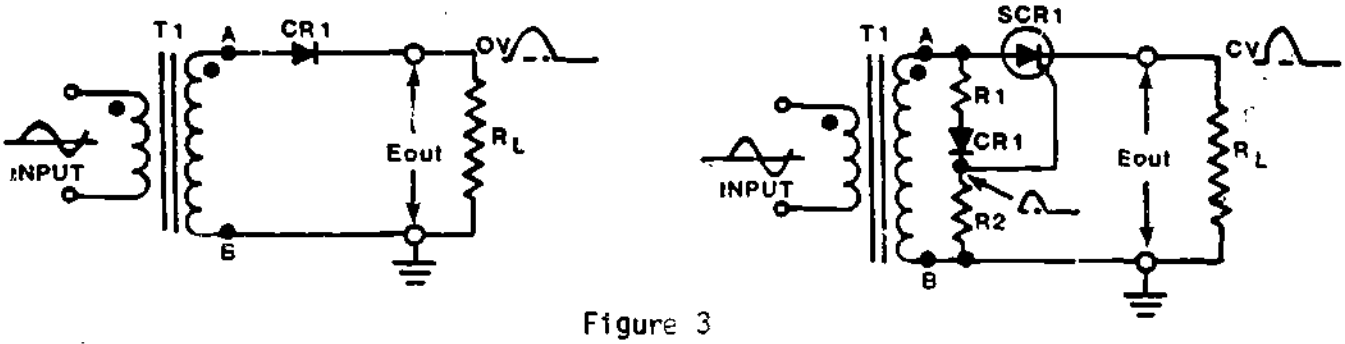


Figure 3

HALF-WAVE DIODE RECTIFIER HALF-WAVE SCR POWER SUPPLY

When you study the schematics notice that the only difference between the half-wave diode rectifier and the SCR power supply is the gating network. This network is made up of R1, R2, and CR1. Study the schematic on the left and make sure you understand how the half-wave rectifier operates, refer back to previous lessons concerning half-wave rectification.

Refer to the half-wave SCR schematic shown in Figure 3. When terminal A of T1 is positive, CR1 is forward biased and current flows through R1 and R2. The voltage across R2 is applied to the gate of the SCR, triggering the SCR and causing it to conduct. During the second half of the input cycle, terminal A is negative, CR1 is reverse-biased and current cannot flow through the resistors. Voltage is only developed across R2 during the positive cycle. During the negative cycle, SCR1 is reverse-biased and current cannot flow. Once the input again becomes positive, SCR1 is forward biased and conducts when a positive gate, or trigger, voltage is applied to the gate. During the negative alternation both SCR1 and CR1 are reversed biased and current cannot flow in either branch of the circuit.

Figure 4 shows the schematic for a half-wave SCR power supply and the output waveforms for different values of R2.

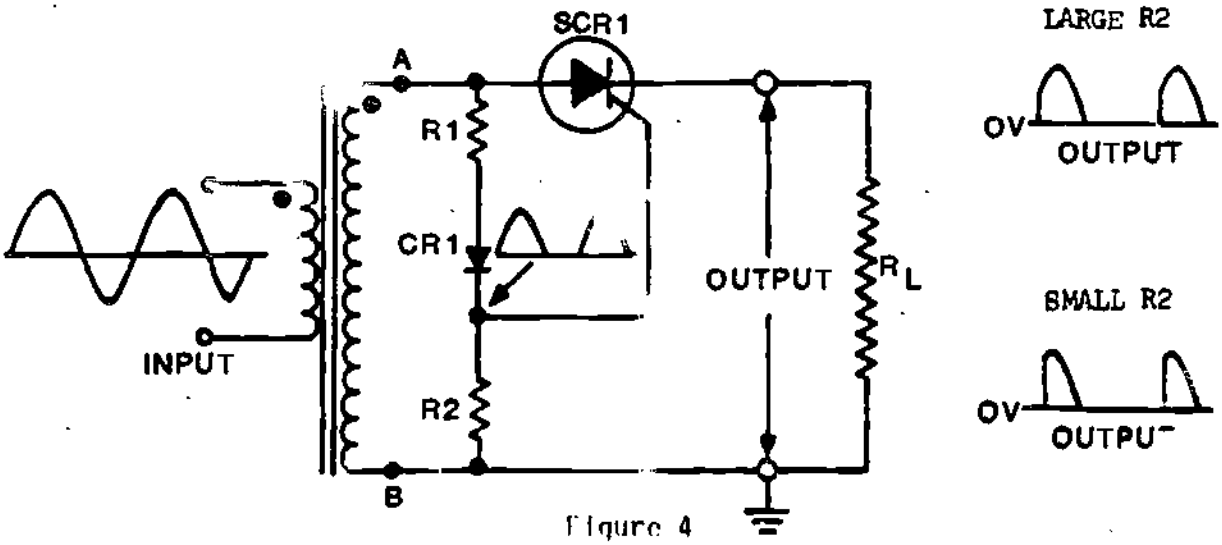


Figure 4

HALF-WAVE SCR POWER SUPPLY

The top waveform shows the input signal as an alternating current signal. As with all sine waves, the input varies from positive to negative in relation to the zero volt reference. Since current flows only when the SCR is forward biased and when a positive trigger voltage gates the SCR, the SCR does not conduct until T4.

The SCR will not conduct from T1 through T4 because it is reverse biased. Even when the SCR becomes forward biased at (T3-T4) it does not conduct until a positive trigger voltage is applied to the gate. In this example this happens at time T4 Remember that once the SCR conducts, it continues to conduct even though the gate voltage is removed. The SCR stops conducting when it is again reverse biased. The period of conduction is indicated by the output waveform shown at the bottom of Figure 2. Study all of the waveforms shown in order to determine when the SCR will again conduct.

Figure 3 shows the schematics for a half-wave diode rectifier and a half-wave unfiltered SCR power supply.

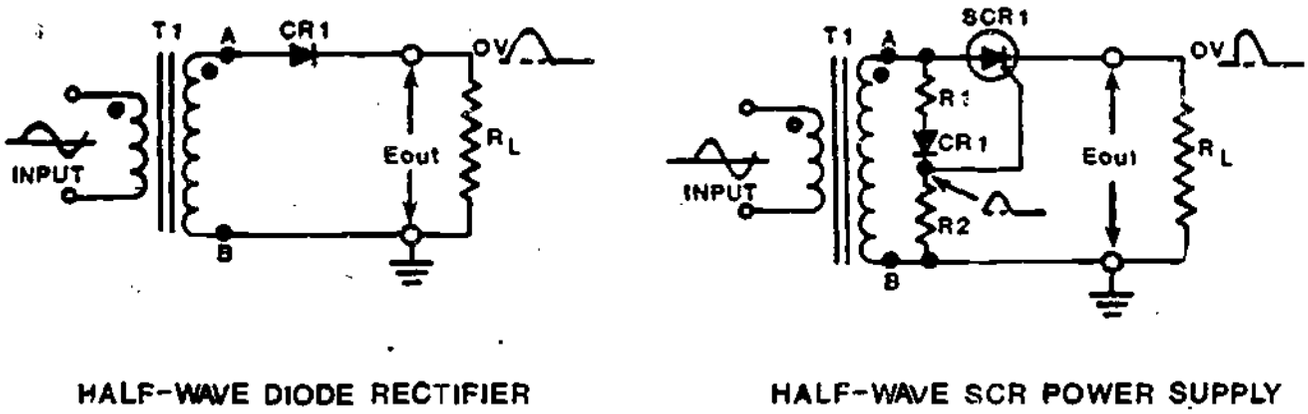


Figure 3

Although half-wave SCR power supplies are seldom used, due to the difficulty of filtering the output, an understanding of their operation will help you understand how the full-wave SCR power supply operates.

Up to this point the explanation has been concerned with one half of a full-wave rectifier. The schematic shown in Figure 6 represents a full-wave SCR power supply. Since the full-wave SCR power supply has twice as many output pulses as the half-wave power supply, the output voltage is easier to filter.

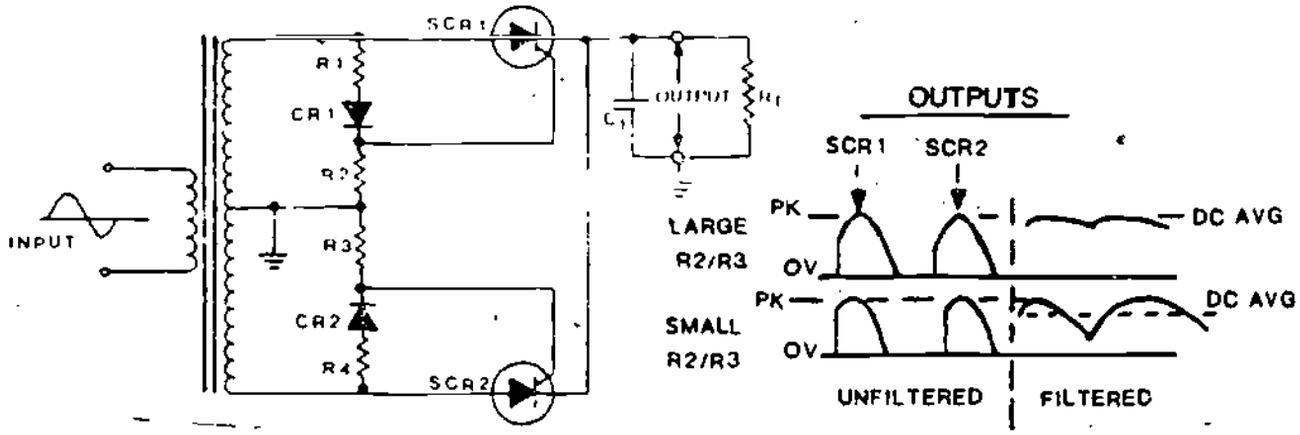


Figure 6

FULL-WAVE SCR POWER SUPPLY

Waveforms immediately to the right of the schematic indicate unfiltered and filtered outputs of the two SCRs and the effect of changing the values of R3 and R2. If it has occurred to you that replacing R3 and R4 with variable resistors results in manual control of the output, you are correct. Make sure you understand how the full-wave SCR power supply operates before proceeding further with this lesson. You may wish to trace current flow on the schematic to help you understand the operation of the various components during the different phases of the input cycle.

The waveforms shown in Figure 7 indicate the unfiltered output of the full-wave SCR power supply during two complete input cycles.

Study the waveforms and notice that with such a power supply there is an output during one half of the sine wave cycle. The bottom waveform shows the total output of the SCR through two complete input cycles. Recall also that changing the value of R3 and R2 changes the firing or triggering time of the SCR and the average output of the rectifier.

Because the gate voltage on the SCR is dependent on voltage divider action, the SCR can be made to fire at different times in the input cycle by merely changing the resistance ratio of resistors R1 and R2. An early turn-on of the SCR results in an increase in the average voltage across the resistive load RL and a delay results in a decrease in the average voltage.

Both of these effects are illustrated in the output waveforms on the right side of Figure 4. Note particularly that the peak amplitude of both waveforms is identical.

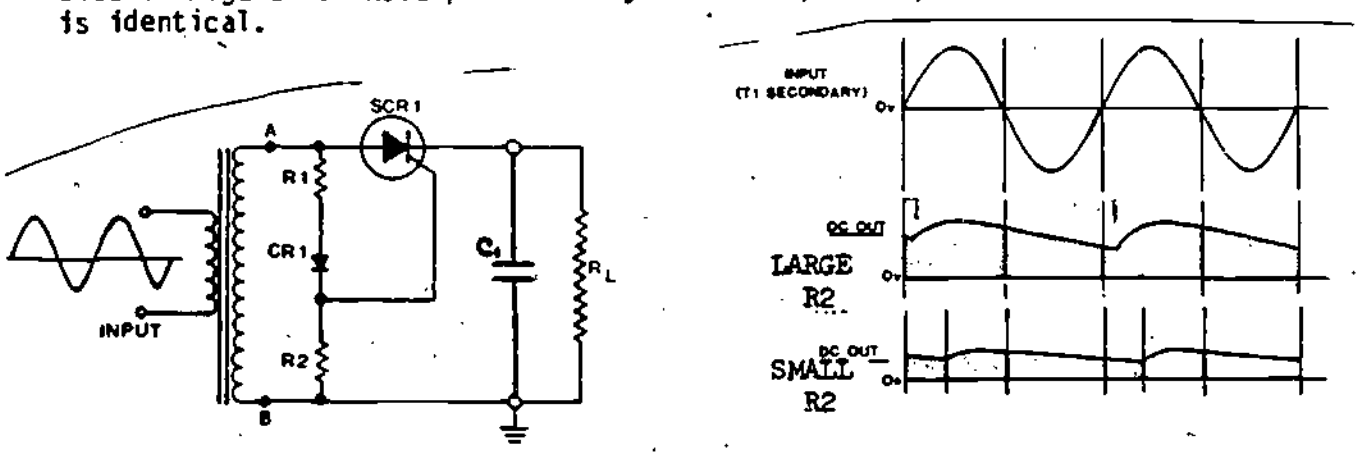


Figure 5

HALF-WAVE SCR POWER SUPPLY WITH FILTER

Addition of a filter capacitor to the circuit shown in Figure 5 provides an average DC output level. This output varies with the size of R2 as shown by the waveforms to the right of the schematic. Since it is possible to vary the SCR's conduction time, the average DC output voltage may be controlled. A long conduction time results in a large average DC output and a short conduction time results in a small average DC output.

The schematic shown in Figure 9 is that of an SCR bridge power supply.

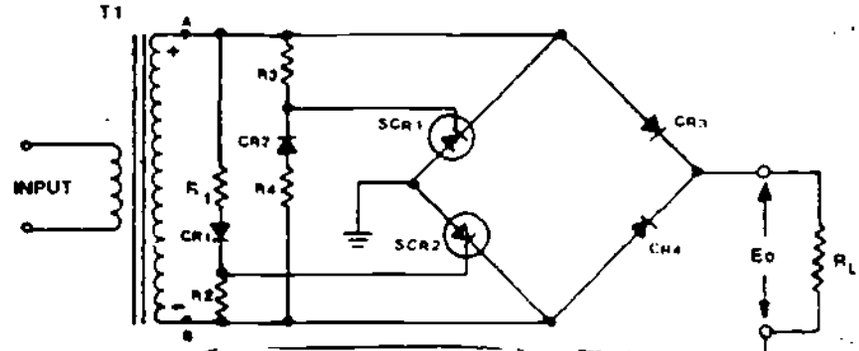


Figure 9

SCR BRIDGE POWER SUPPLY

Notice that the two SCRs used in this power supply are connected so one of the SCRs is always in series with the load. Stated another way, one of the SCRs always controls the load current. It may be helpful if you trace around the circuit and familiarize yourself with the concept that SCR1 is in series with CR4 and SCR2 is in series with CR3.

To further help you understand the operation of this SCR bridge rectifier, current paths have been indicated with broken lines in Figure 10.

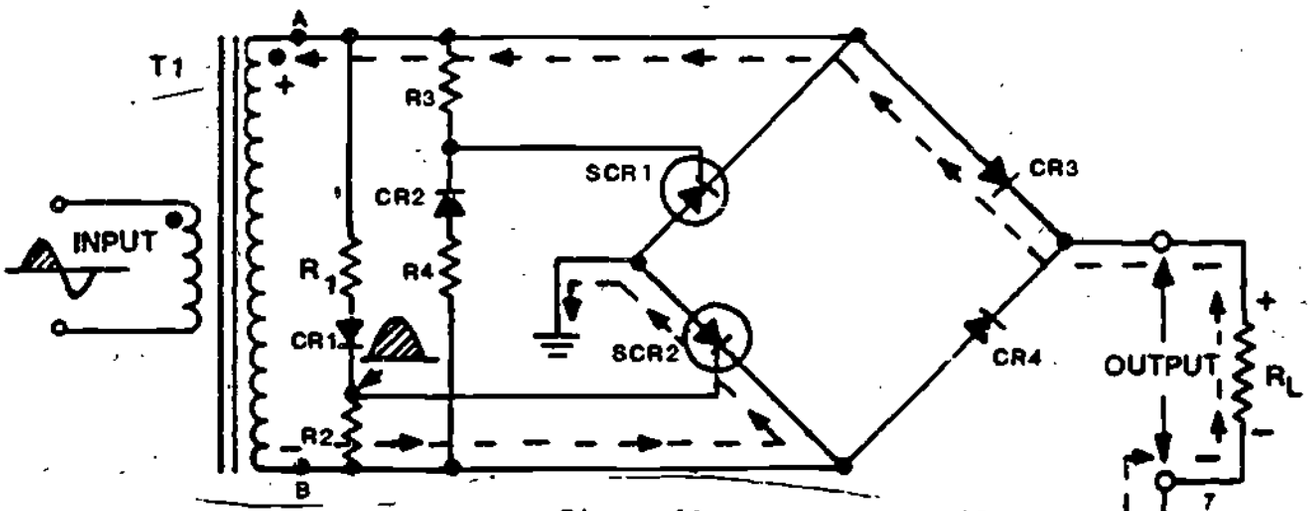


Figure 10

UNFILTEREO SCR BRIDGE POWER SUPPLY

When terminal A of T1 is positive, CR1, CR3, and SCR2 are forward biased. This causes current to flow from terminal B of T1 through R2, CR1, and R1 and back to terminal A. When the voltage drop across R2 reaches the firing potential for SCR2, the SCR conducts and current will flow from terminal B through SCR2 to ground. The current path to terminal A is thereby completed from ground at the bottom of RL and through CR3. This current path exists until the polarity of the voltage across the secondary reverses.

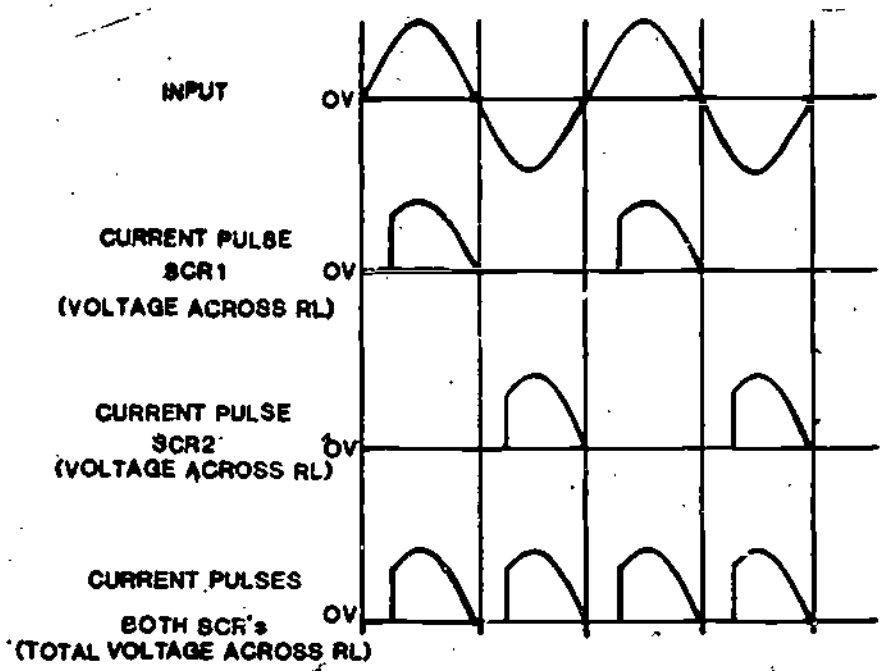


Figure 7

FULL-WAVE SCR POWER SUPPLY

Full-wave diode power supplies require a center tapped transformer secondary that only utilizes one-half of the transformer's secondary potential at any given time. This is also true of full-wave SCR power supplies. In order to make full use of the secondary voltage a bridge power supply may be used. In many respects the SCR bridge power supply is identical with a regular bridge diode power supply. Figure 8 shows the schematics for a standard diode bridge power supply and a SCR bridge power supply. Before proceeding further, spend some time acquainting yourself with the similarities of these two types of power supplies.

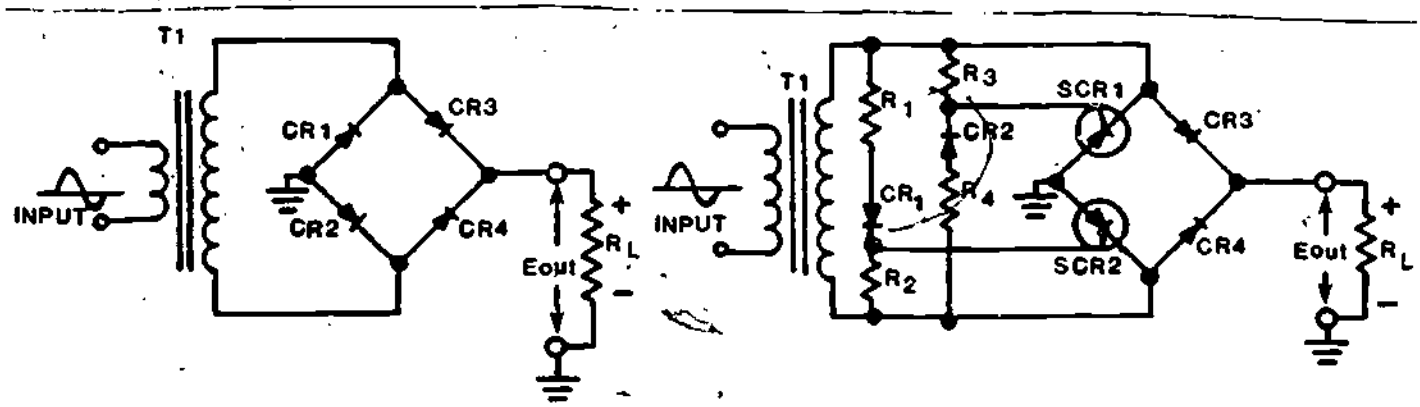


STANDARD DIODE BRIDGE SCR BRIDGE POWER SUPPLY

Figure 8

Close examination of the schematic shown in Figure 8 reveals that the only difference between the two schematics is that the SCR bridge power supply uses two SCRs and gating or triggering networks.

BASIC ELECTRICITY AND ELECTRONICS

MODULE THIRTY

LESSON 4

SCR REGULATED POWER SUPPLIES

JULY 1980

197

When terminal A is negative with respect to terminal B, CR2 is forward biased. Refer again to the schematic shown in Figure 10. When the voltage drop across R3 is large enough SCR1 fires. Current then flows from terminal A to T1, through SCR1 to ground, up from ground through RL and CR4 and back to the positive side of the transformer. No other current can flow at this time due to the fact that SCR2 is reverse-biased and not gated on. Spend some time studying these schematics in order to make sure you understand how the current flows when the various SCRs are gated or triggered "on".

The schematic shown in Figure 11 is for the same SCR bridge power supply. The only difference is that R2 and R3 have been replaced with variable resistors. These resistors are mechanically coupled or ganged. The gating voltages may be changed, or modified, by changing the value of R2 and R3. The power supply output may be varied to any desired value within the circuit capability by merely rotating the control.

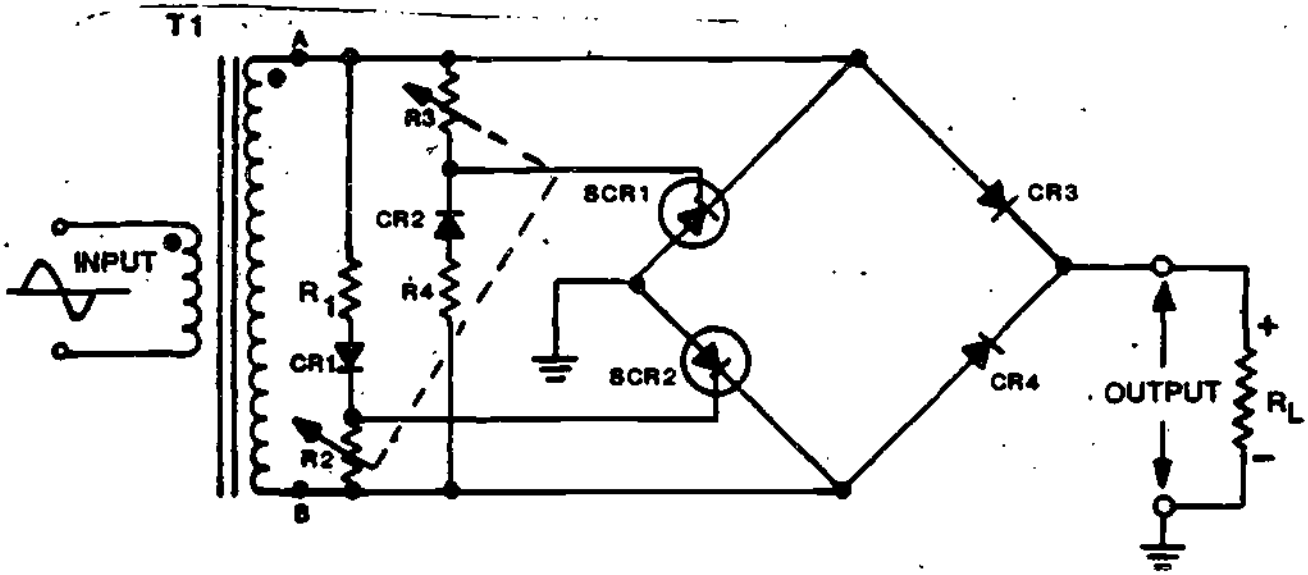


Figure 11

VARIABLE OUTPUT SCR BRIDGE POWER SUPPLY

AT THIS POINT, YOU MAY TAKE THE LESSON PROGRESS CHECK. IF YOU ANSWER ALL SELF-TEST ITEMS CORRECTLY, YOU MAY TAKE THE LESSON TEST. IF YOU INCORRECTLY ANSWER ONLY A FEW OF THE PROGRESS CHECK QUESTIONS, THE CORRECT ANSWER PAGE WILL REFER YOU TO THE APPROPRIATE PAGES, PARAGRAPHS, OR FRAMES SO THAT YOU CAN RESTUDY THE PARTS OF THIS LESSON YOU ARE HAVING DIFFICULTY WITH. IF YOU FEEL THAT YOU HAVE FAILED TO UNDERSTAND ALL, OR MOST, OF THE LESSON, SELECT AND USE ANOTHER WRITTEN MEDIUM OF INSTRUCTION, AUDIO/VISUAL MATERIALS (IF APPLICABLE), OR CONSULTATION WITH LEARNING CENTER INSTRUCTOR, UNITL YOU CAN ANSWER ALL SELF-TEST ITEMS ON THE PROGRESS CHECK CORRECTLY.

30.4.51.6 IDENTIFY the function of components and circuit operation of a complete SCR regulated power supply, given a schematic diagram, by selecting the correct statement from a choice of four. 100% accuracy is required.

30.4.51.7 MEASURE, CALCULATE and COMPARE output voltage waveforms, and SCR conduction times in an SCR regulated power supply given a training device, circuit boards, test equipment and proper tools, schematic diagram, and a job program containing references for comparison. Recorded data must be within limits stated on the job program.

30.4.51.8 IDENTIFY the faulty component or circuit malfunction in a given SCR regulated power supply circuit, given a schematic diagram and failure symptoms, by selecting the correct fault from a choice of four. 100% accuracy is required.*

---

* This objective is considered met upon successful completion of the terminal objective.

BEFORE YOU START THIS LESSON, READ THE LESSON LEARNING OBJECTIVES AND PREVIEW THE LIST OF STUDY RESOURCES ON THE NEXT PAGE.

# OVERVIEW
# LESSON 4

## SCR Regulated Power Supplies

In this lesson you will learn about SCR regulated power supplies and their application. You will learn how the power supply compensates for changes in input and load. You will also learn how the SCR control circuit varies SCR firing time to maintain a constant voltage output.

The learning objectives of this lesson are:

TERMINAL OBJECTIVE(S):

30.4.51 When the student completes this lesson, (s)he will be able to TROUBLESHOOT and IDENTIFY faulty components and/or circuit malfunctions in a regulated SCR power supply circuit when given a prefaulted circuit board, schematic diagram, instructions and necessary test equipment. 100% accuracy is required.

ENABLING OBJECTIVES:

When the student completes this lesson, (s)he will be able to:

30.4.51.1 IDENTIFY the function and basic principles of operation of the control circuit in an SCR regulated power supply, by selecting the correct statement from a choice of four. 100% accuracy is required.

30.4.51.2 IDENTIFY the function and operating characteristics of the control amplifier and pulse generator stages of an SCR regulated power supply control circuit by selecting the correct statement from a choice of four. 100% accuracy is required.

30.4.51.3 IDENTIFY the components that make up each of the two stages of an SCR regulated power supply control circuit, given a schematic diagram of the circuit, by selecting the correct list of components from a choice of four. 100% accuracy is required.

30.4.51.4 IDENTIFY the function of components and circuit operation of a two-stage SCR regulated power supply control circuit by selecting the correct statement from a choice of four. 100% accuracy is required.

30.4.51.5 IDENTIFY the components which make up the individual circuits within a complete SCR regulated power supply, given a schematic diagram, by selecting the correct list of components from a choice of four. 100% accuracy is required.

SUMMARY
LESSON 4

SCR Regulated Power Supplies

In lesson three of this module you learned about SCR Power Supply Circuits and the advantages which these circuits provide over conventional diode power supplies. This lesson covers circuits which have been designed to control the output of SCR Power Supplies.

By using control circuitry, the amount of time the power supply SCRs conduct can be regulated. Recall that the conduction time of the SCR determines the output voltage of the power supply. The control circuit also compensates for variations in input voltage and circuit load. The diagram shown in Figure 1 indicates pictorially how the conduction time of the SCR is controlled and shows the effect of varying SCR trigger times.

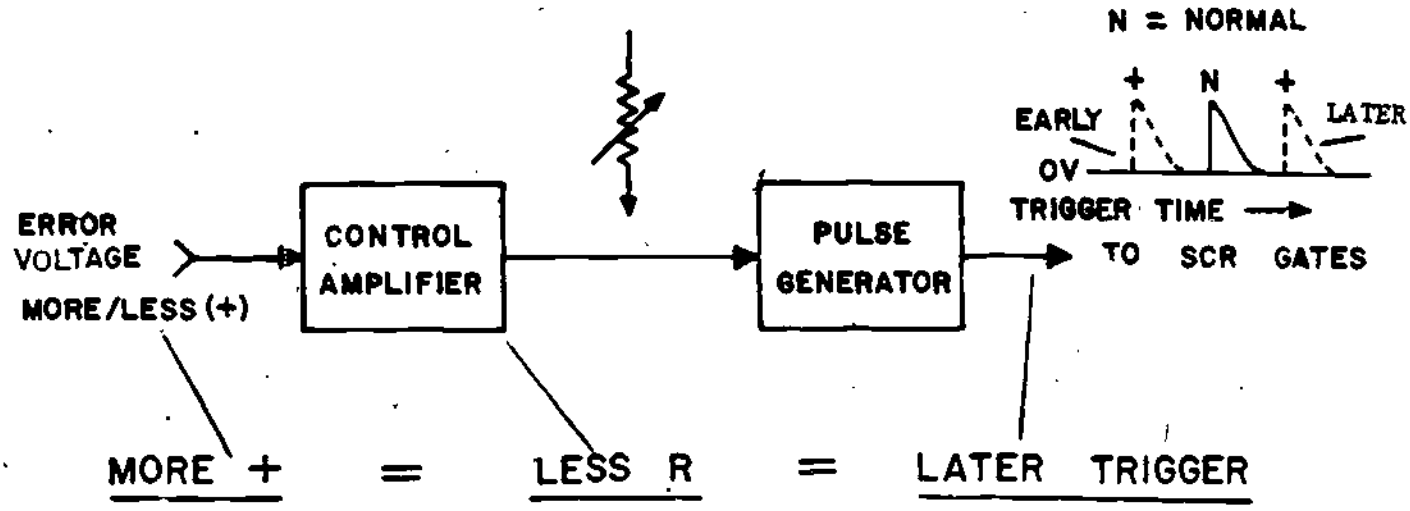


Figure 1

CONTROL CIRCUITS

Two stages are required in order to control conduction time. Stage 1 is referred to as the control amplifier and stage 2 may be referred to as the pulse generator. The output from the pulse generator is supplied to the SCR gates and determines when the SCR's will trigger or fire.

# LIST OF STUDY RESOURCES
## LESSON 4

## SCR Regulated Power Supplies

To learn the materials in this lesson, you have the option of choosing, according to your experience and preferences, any or all of the following study resources.

Written Lesson presentation in:

Module Booklet

- Summary
- Narrative
- Programmed Instruction

Student's Guide:

- Summary
- Progress Check
- Job Program Thirty-4 "SCR Regulated Power Supplies"
- Fault Analysis (Paper Troubleshooting) I.S.
- Performance Test I.S.

Additional Material(s):

35 mm sound/slide "Thirty-4 SCR Regulated Power Supplies"

Enrichment Material(s):

NAVSHIPS 0967-000-0120 "Electronic Circuits" Electronics Installation and Maintenance Book (EIMB) Naval Ship Engineering Center, Washington, D.C.: U.S. Government Printing Office, 1965.

YOU MAY USE ANY, OR ALL, RESOURCES LISTED ABOVE, INCLUDING THE LEARNING CENTER INSTRUCTOR; HOWEVER, ALL MATERAILS LISTED ARE NOT NECESSARILY REQUIRED TO ACHIEVE LESSON OBJECTIVES. THE PROGRESS CHECK MAY BE TAKEN AT ANY TIME.

The schematic shown in Figure 3 is for the pulse generator circuit.

Before the UJT can trigger or fire the SCR, the UJT's emitter-base 1 forwa bias must be adequate to trigger or fire the UJT. The UJT emitter-base 1 forward bias is dependent on the charging time of C1. When the capacitor charges quicker, the UJT fires sooner and the conduction time of the SCRs increase, thus increasing the output voltage. Delayed charging of C1 causes the UJT to fire later with a corresponding decrease in conduction time and output voltage.

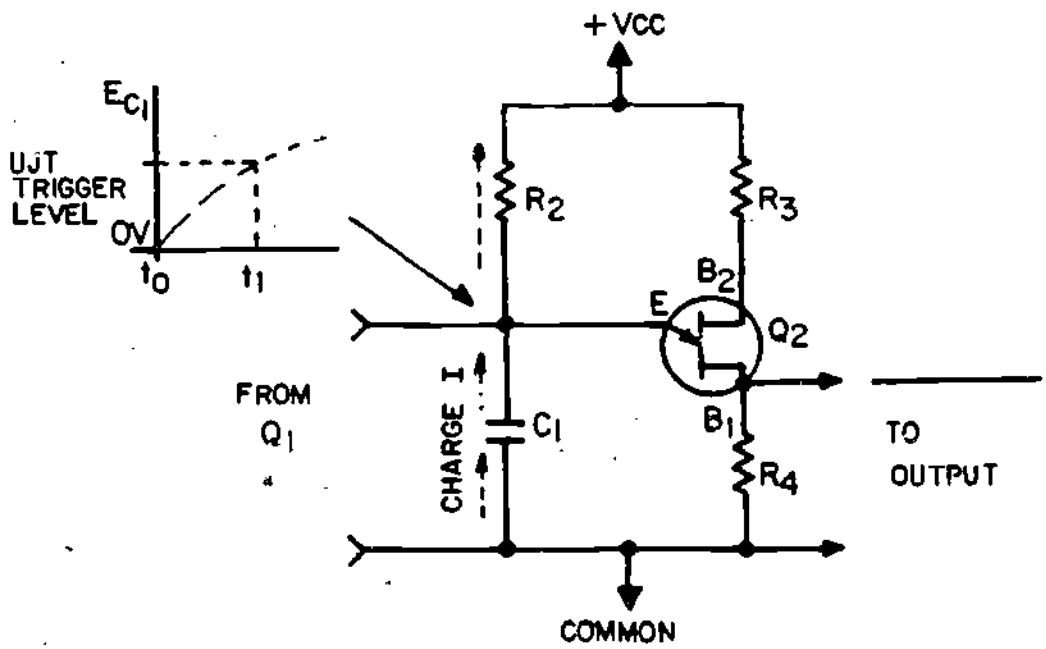


Figure 3

PULSE GENERATOR CIRCUIT

In addition to the basic circuit, C1's charging action is shown in the upper left hand corner of the figure.

During time cycle T0 through T1, C1 charges toward the UJT trigger level potential through R2. Because the UJT has not yet triggered the SCR. there is no output at this time. When the voltage across C1 reaches the trigger level of the UJT, the UJT fires. In other words, when the emitter-base 1 junction of the UJT becomes forward biased, the UJT conducts. This allows C1 to discharge rapidly through R4. The discharge current through R4 produces the output pulse.

The waveforms shown in the upper right hand corner of the figure illustrate different turn-on times for the SCRs. The waveform at the extreme left (+) indicates an early turn-on time, whereas the waveform on the right (+) shows a delayed turn-on, or gating. The waveform designated with the "N" illustrates the usual, or "normal" turn on time. The (+) and (+) signs denote the error voltage level that produces the particular early or late trigger. A less positive error voltage is denoted by (+), while a more positive error voltage is denoted as (+).

The pulse generator triggers, or gates, the SCRs on early, whenever there is an increase in load current or decrease in input voltage. It triggers the SCRs later to compensate for a decrease in load current or increase in input voltage. Make sure you understand this concept before proceeding further with this lesson. The schematic in Figure 2 shows the control circuit required for a typical SCR regulated power supply.

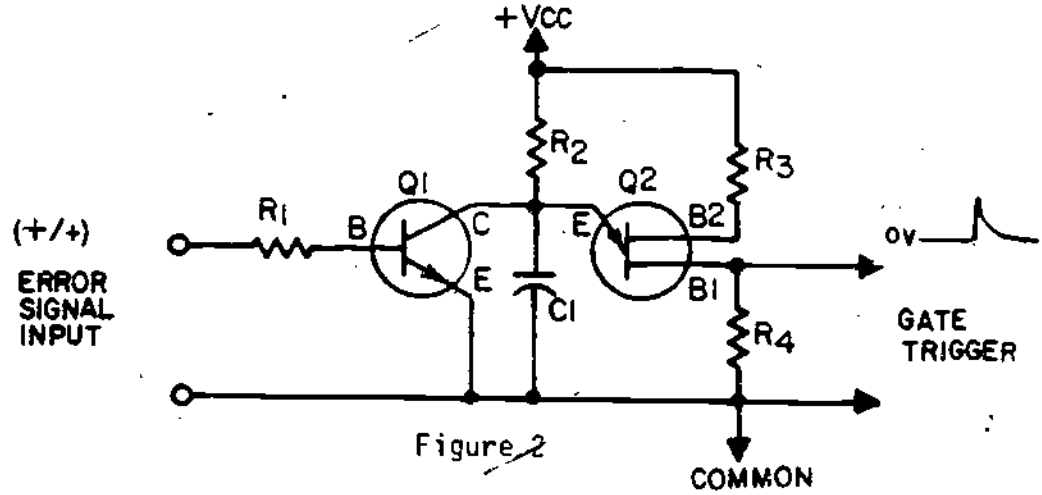


Figure 2

CONTROL CIRCUIT

The control amplifier is made up of Q1, current limiting resistor R1, and collector load resistor R2. The pulse generator trigger frequency is determined by the charging time of C1. R2 and the variable resistance of Q1, together with C1 determine C1's charging time.

The size of the error voltage determines the forward bias of Q1 and this results in either an increase or decrease in the transistor's internal resistance. This change in Q1's resistance influences the time it takes C1 to charge. This is a basic concept essential to understanding the operation of the control circuit.

Again refer to the schematic shown in Figure 2 and the components which make up the pulse generator circuit. This circuit is made up of unijunction transistor Q2, C1, R2, R3, and R4. If you do not recall how UJT's oscillate to produce trigger output pulses, refer to Lesson 2 of Module 25.

Up to this point the explanation has concentrated on the control and triggering circuits of the regulating device. A schematic for a typical SCR power supply together with control circuitry is shown on the foldout appended to the end of this lesson. This diagram is the schematic for the NIDA SCR regulated power supply which you will use as part of the job program for this lesson. Refer to this schematic for the remainder of the lesson. Notice that the rectifier and filter circuit is designated with heavy lines and the control circuitry is shown with light lines. Notice that two bridge rectifiers are shown. The main bridge rectifier consists of SCRs Q3 and Q4 and diodes CR5 and CR6. The other bridge circuit is made up of CR3, CR4, CR5 and CR6. This voltage is regulated by the Zener diode CR1 and R1. The output of this bridge circuit is used to provide a positive regulated voltage to Q1 and Q2 in the control circuit, and thus improve the total circuit regulating action.

As you study the schematic notice that CR5 and CR6 are used in both of the bridge circuits. Since these diodes are used in both circuits they conduct more current than CR3 and CR4.

After the capacitor discharges the emitter-base 1 junction of the UJT again becomes reverse biased and current no longer flows. C1 now charges again and the cycle repeats. You should now understand the effect of charging and discharging C1 on the pulse generator circuit.

Q1 is the variable component which influences the charging rate of C1. It operates somewhat like a variable resistor to modify C1's charging times. The schematic shown in Figure 4 depicts the transistor as a variable resistor $R_{Q1}$. Recall that the resistance of a transistor changes depending on its base-emitter forward bias. If you are unable to recall this relationship refer to Lesson 2 of this module or Module 21.

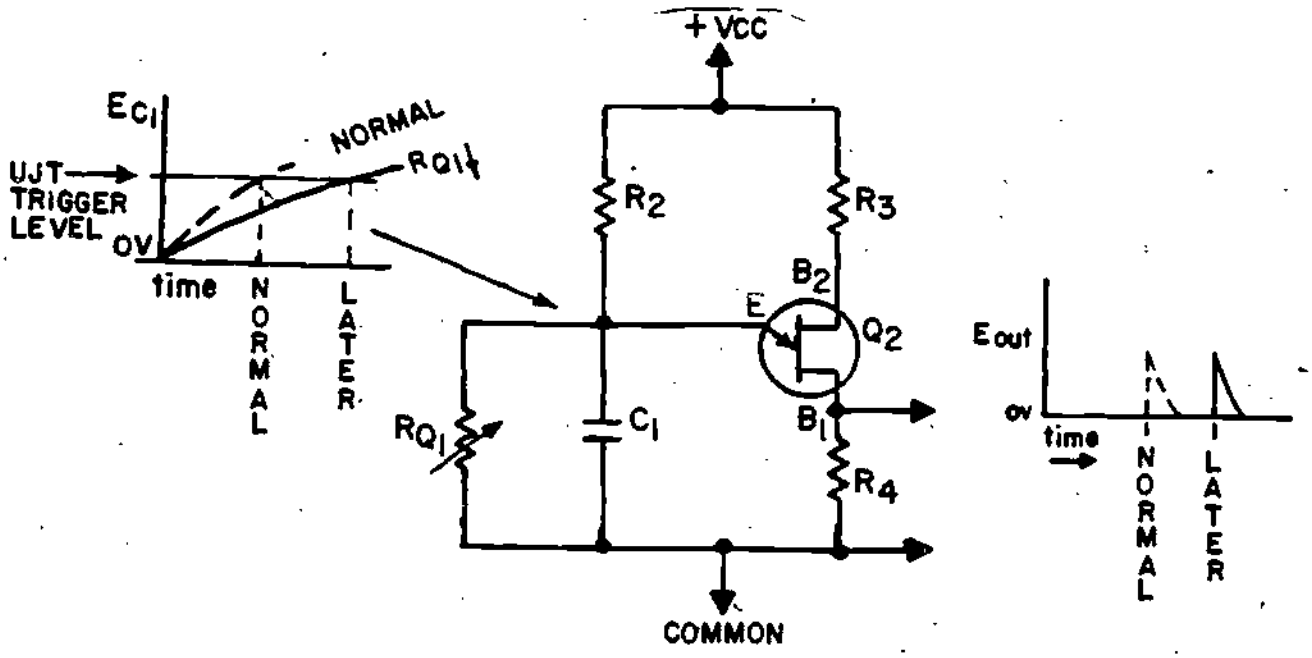


Figure 4

PULSE GENERATOR CIRCUIT

The waveforms shown on the right side of the figure indicate the pulse or trigger time of the UJT for normal operation and trigger time when the input voltage of the power supply is increased. The waveforms on the left side of the schematic indicate when C1 forward biases Q2 and causes the UJT to trigger or pulse the SCR.

Any increase in the input voltage increases the forward bias of Q1, thereby decreasing its resistance. This causes C1 to reach maximum charge later and causes the UJT to trigger the SCRs later. Study the schematic and waveforms and make sure you understand how changes in circuit load current effect the triggering or firing time of the UJT.

The waveforms shown in Figure 6 show what happens when the input voltage increases or the load current decreases.

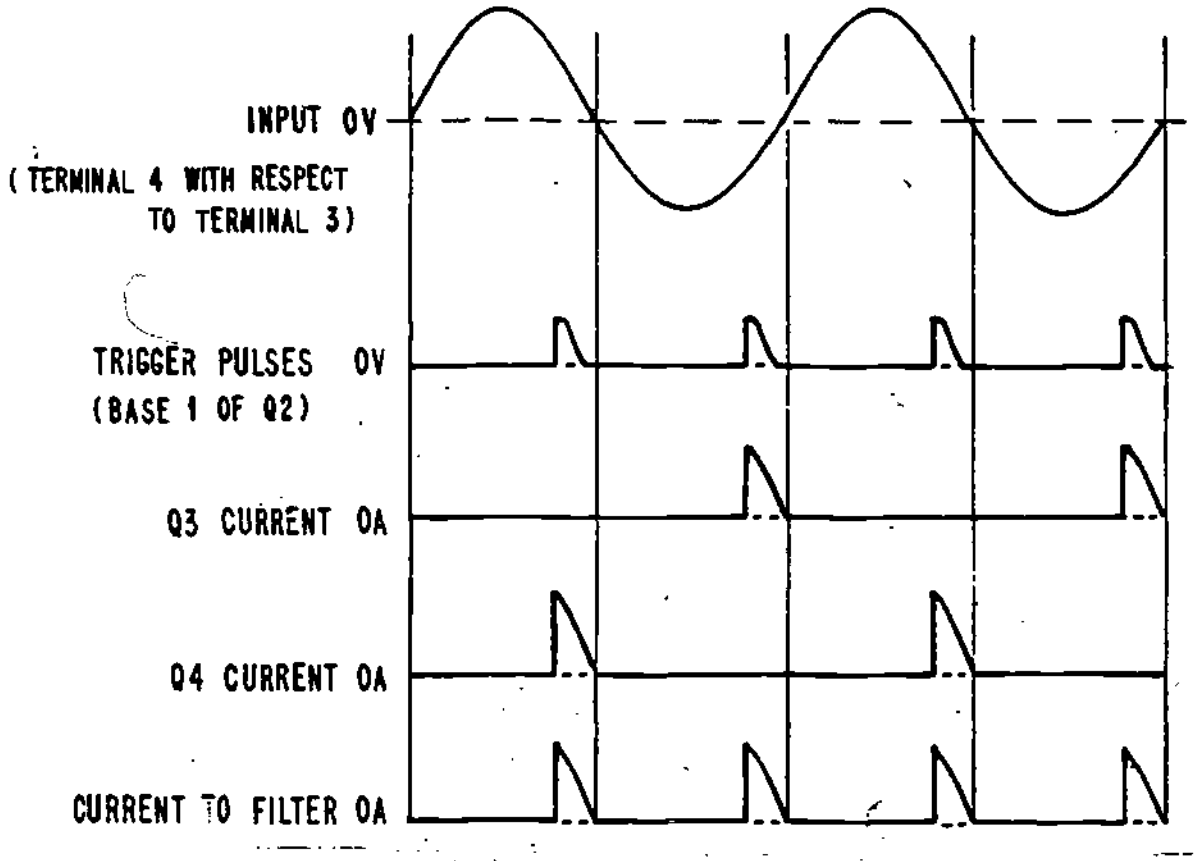


Figure 6

WAVEFORMS FOR INCREASED VOLTAGE OR REDUCED LOAD

Study these waveforms and those shown in Figure 5 in conjunction with the NIOA SCR schematic and try to visualize how the various components compensate for changes in load and/or input. This should give you a good understanding of how SCR regulated power supplies operate.

If you have difficulty understanding the material in this summary read and study either the narrative or programmed instruction for this lesson. This summary only covers the major concepts of circuit operation.

AT THIS POINT, YOU MAY TAKE THE LESSON PROGRESS CHECK. IF YOU ANSWER ALL SELF-TEST ITEMS CORRECTLY, PROCEED TO THE JOB PROGRAM. IF YOU INCORRECTLY ANSWER ONLY A FEW OF THE PROGRESS CHECK QUESTIONS, THE CORRECT ANSWER PAGE WILL REFER YOU TO THE APPROPRIATE PAGES, PARAGRAPHS, OR FRAMES SO THAT YOU CAN RESTUDY THE PARTS OF THIS LESSON YOU ARE HAVING DIFFICULTY WITH. IF YOU FEEL THAT YOU HAVE FAILED TO UNDERSTAND ALL, OR MOST, OF THE LESSON, SELECT AND USE ANOTHER WRITTEN MEDIUM OF INSTRUCTION, AUDIO/VISUAL MATERIALS (IF APPLICABLE), OR CONSULTATION WITH LEARNING CENTER INSTRUCTOR, UNTIL YOU CAN ANSWER ALL SELF-TEST ITEMS ON THE PROGRESS CHECK CORRECTLY.

The waveforms shown in Figure 5 are included to help you understand the operation of the power supply.

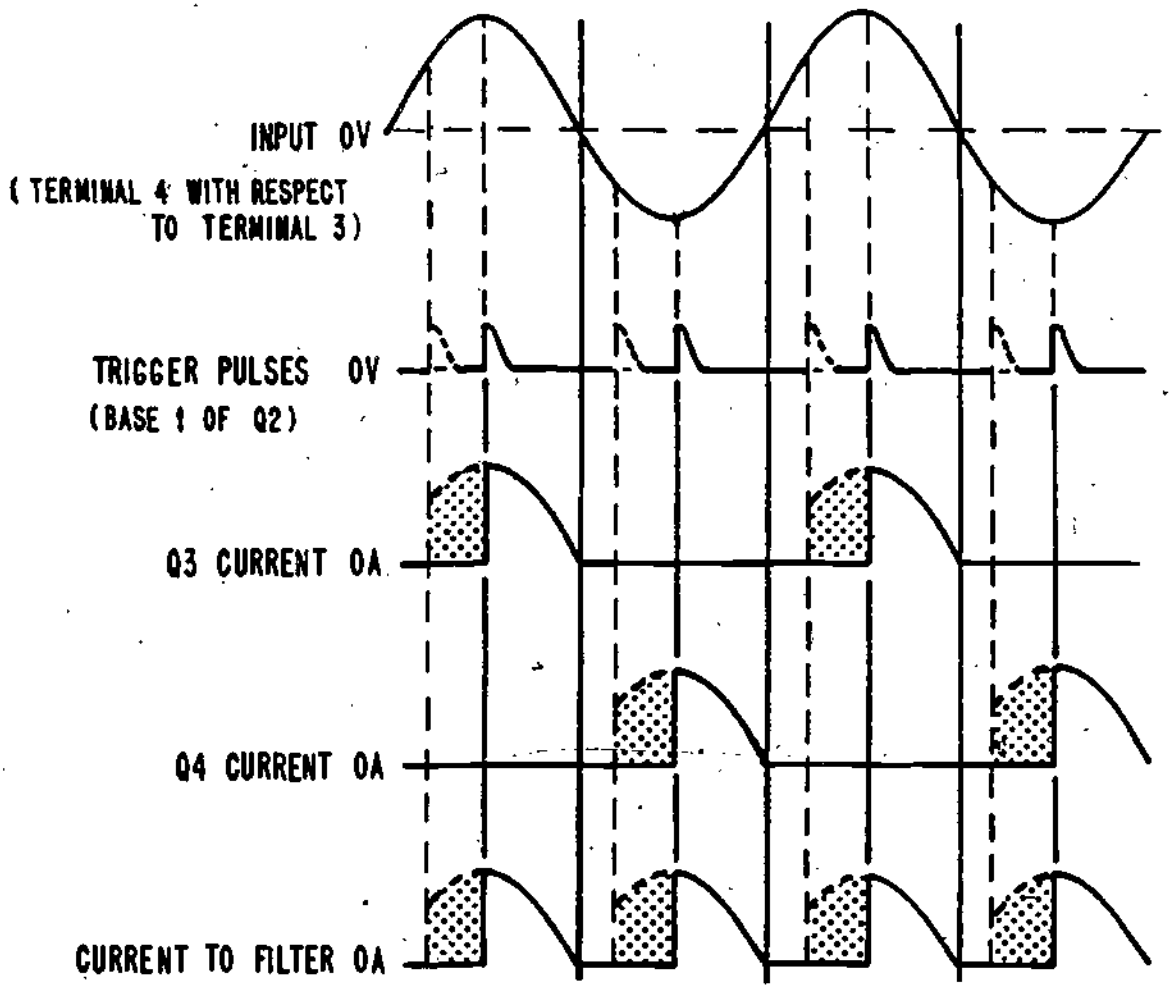


Figure 5

NORMAL OPERATING WAVEFORMS

The solid waveforms show a normal input and output for the power supply. The broken lines illustrate how the triggering time and output change when the load current is <u>increased</u> or the input voltage <u>decreases</u>.

PROGRAMMED INSTRUCTION
LESSON 4

SCR Regulated Power Supplies

TEST FRAMES ARE 4, 10, 18, AND 22 PROCEED TO TEST FRAMES 4 AND SEE IF YOU CAN ANSWER THE QUESTIONS. FOLLOW THE DIRECTIONS GIVEN AFTER THE TEST FRAME.

1. In Lesson 3 you learned that the SCR's conduction time determines the output voltage of an SCR power supply. Varying the conduction time will compensate for changes in input voltage or load current to insure a constant regulated DC output. When the gate of the SCR is triggered earlier, current flows sooner, and there is a greater output voltage from the power supply. Triggering the SCR later reduces the period of time when current flows and causes a decrease in output voltage.

Increasing the conduction time of an SCR results in

a. a reduction in the power supply current output

b. an overload on the SCR

c. an increase in the SCR power supply output voltage

d. a possible circuit overload for the power supply.

---

c. an increase in the SCR power supply output voltage.

The output of an SCR power supply may be varied by

a. varying the conduction time of the power supply SCR(s)

b. applying a negative voltage to the SCR gate

c. making sure the SCR gate voltage is held constant

d. none of the above

---

a. varying the conduction time of the power supply SCR(s)

3. Figure 2 shows pictorially how the SCRs conduction time is controlled.

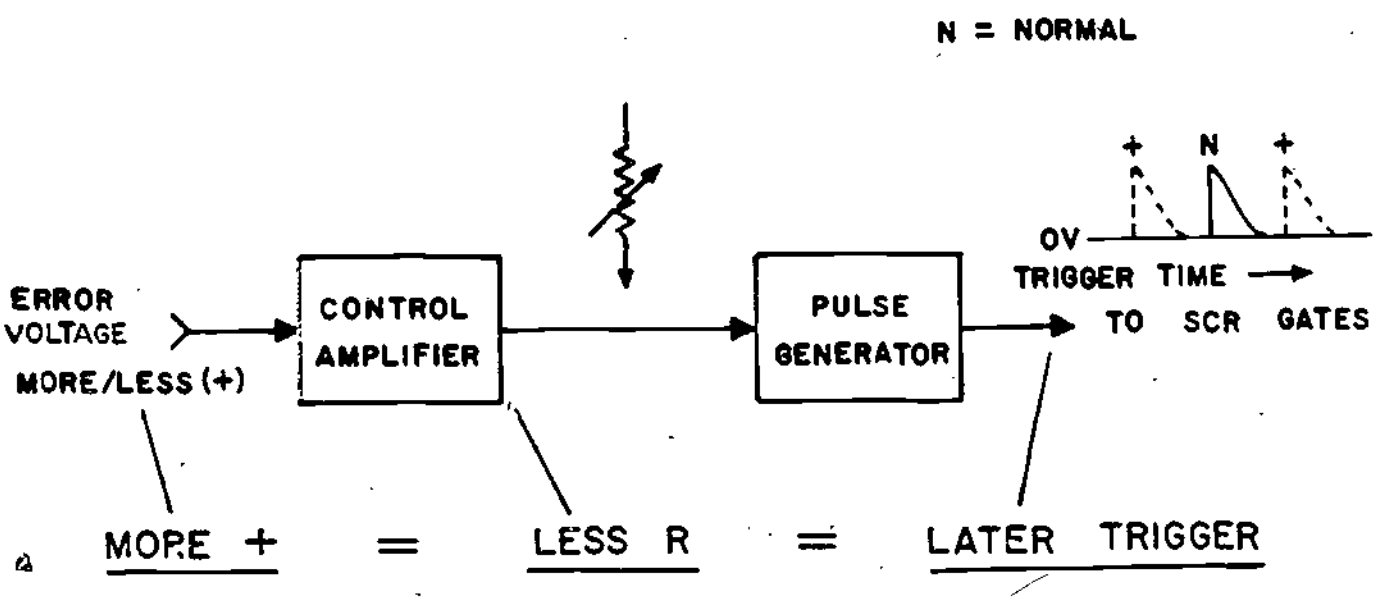


Figure 2

CONTROL CIRCUITS

Notice that two stages are required to control the conduction time of the SCR. Stage 1 is referred to as the control amplifier and Stage 2 may be referred to as a pulse generator. The input or error voltage may be either

2. The drawing shown in Figure 1 depicts the sections which make up a regulated SCR power supply.

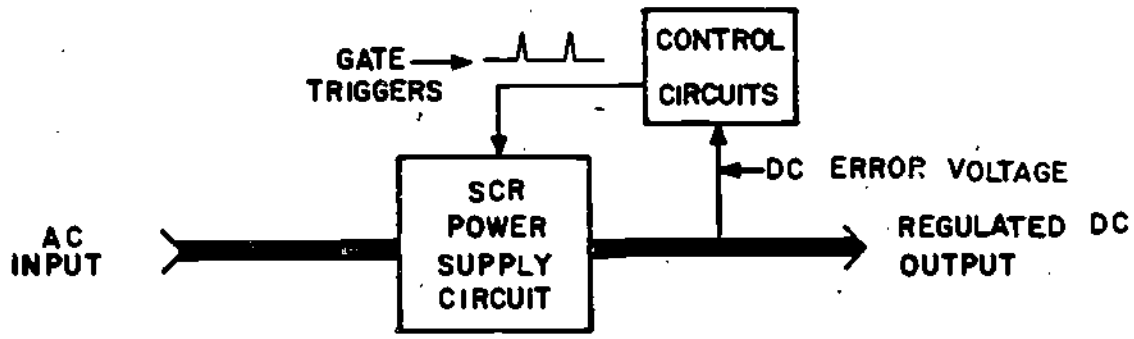


Figure 1

SCR REGULATED POWER SUPPLY

Notice that the regulated power supply consists of an SCR power supply circuit and a regulator control circuit. The pictorial drawing shown illustrates how the regulator control circuit functions to change the gate triggering times. Varying the conduction time can therefore be used to compensate for fluctuations in the AC input voltage and variations in load current. Regulation is accomplished by detecting an error voltage at the output of the supply and using it to develop gate triggers that control SCR conduction time. The function of the control section is to convert a DC error voltage into variable time gate triggers.

# Trial and Error

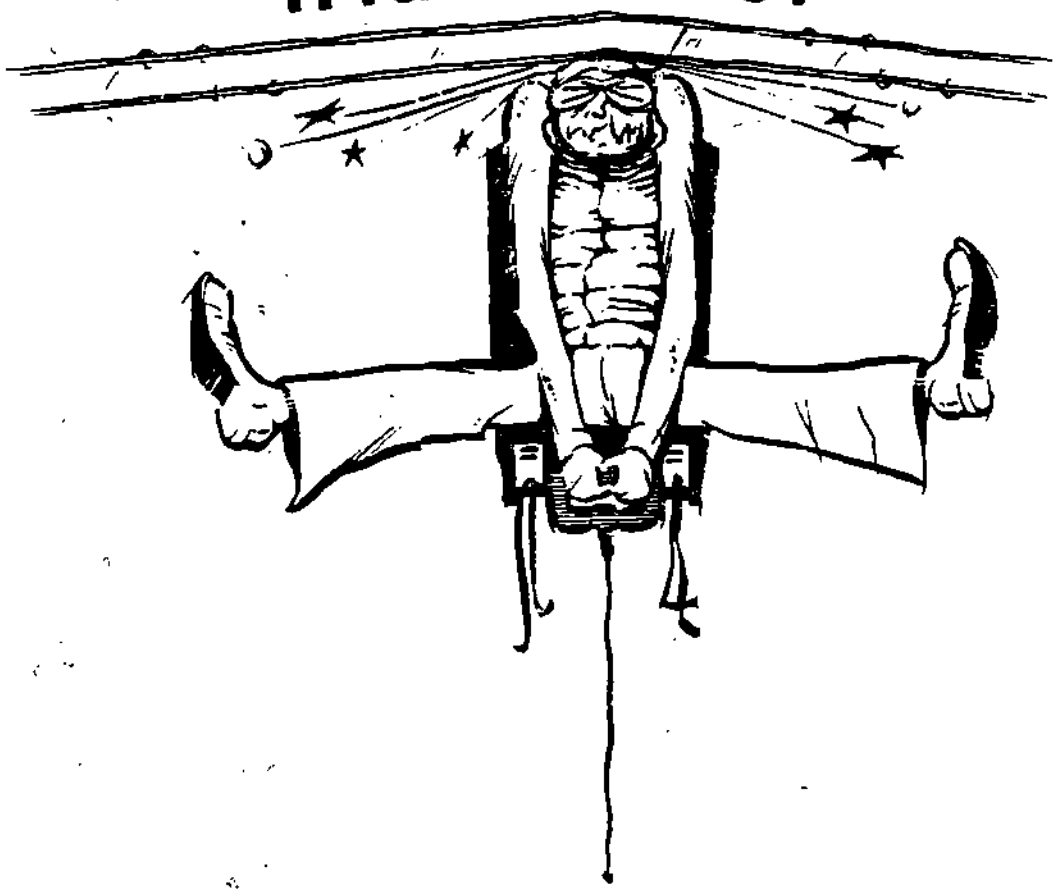

# CAN BE A DEADLY TEACHER

Contributed by Andrew P. Linsley II, Va. 47

C60 GI 970

212

more or less positive. The resistance of the control amplifier varies with the level of the error voltage. A more positive error voltage produces less resistance in the control amplifier stage. The control amplifier resistance determines whether the pulse generator triggers the SCR earlier or later. A small resistance in the control amplifier stage causes the trigger from the pulse generator to occur later than normal. The effect of the late triggering on the SCRs in the power supply is that the SCRs conduct for a shorter period of time therefore reducing the output of the power supply. A large resistance in the control amplifier causes earlier triggering and an increase in the power supply output.

Notice the waveforms shown in the upper right hand corner of Figure 2. These waveforms indicate trigger time in relation to the input error voltage. The waveform on the left shows that when the error voltage is less positive, the pulse generator triggers the SCR gates earlier, and the waveform on the extreme right shows that when the error voltage is more positive, the pulse generator triggers the SCR gates at a later time. Make sure you understand how the error voltage influences the pulse generator before proceeding further with this lesson.

A more positive error voltage produces a smaller/larger_____than normal resistance for the control amplifier stage and causes the trigger from the pulse generator to occur earlier/later_____than normal.

---

_____

smaller, later

1. a. varying the conduction time of the SCRs

2. smaller, later

IF YOUR ANSWERS MATCH THE CORRECT ANSWERS YOU MAY GO TO TEST FRAME 10 OTHERWISE GO BACK TO FRAME 1 AND TAKE THE PROGRAMMED SEQUENCE AGAIN BEFORE TAKING TEST FRAME 4 AGAIN.

5. At this point you are familiar with the basic concepts of how changes in SCR gating time effects the output of SCR power supply circuits. The schematic shown in Figure 3 illustrates the two stages of the control circuit and their inter-connection.

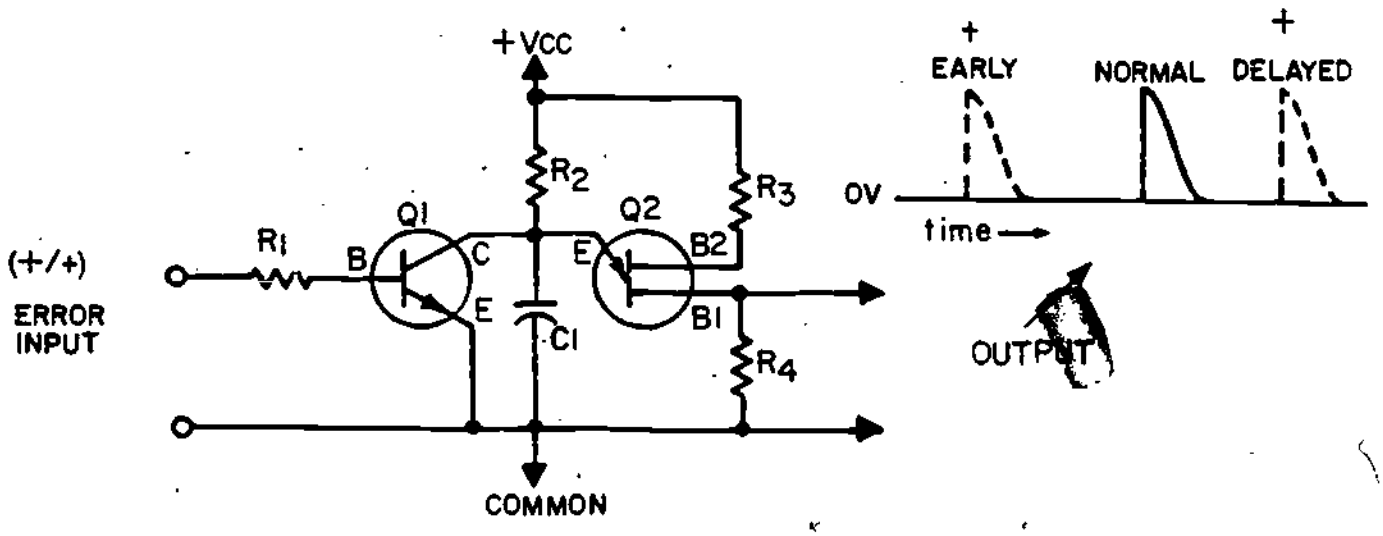


Figure 3

CONTROL CIRCUITS

The control amplifier circuit is made up of Q1, current limiting resistor R1, and the collector load resistor R2. The pulse generator stage is made up of the UJT Q2, C1 and R2, R3 and R4. The triggering frequency of the circuit is determined by the action of CI, R2 and Q1. To help you better

4. THIS IS A TEST FRAME. COMPLETE THE TEST QUESTIONS AND COMPARE YOUR ANSWERS WITH THE CORRECT ANSWERS GIVEN AT THE TOP OF THE PAGE FOLLOWING THE TEST QUESTIONS.

1. The output voltage of the SCR power supply may be varied by
   a. varying the conduction time of the SCRs
   b. applying a negative voltage to the SCR gates
   c. keeping the SCR gate voltages constant
   d. none of the above
2. A more positive error voltage produces a smaller/larger _____ than normal resistance for the control amplifier stage and causes the trigger pulse from the pulse generator to occur earlier/later _____ than normal.

The varying components which influence the time for C1 to charge is

a. R1

b. Q2

c. Q1

d. R2

---

c. Q1

7. An understanding of how C1 and Q2 operate to trigger the SCRs will enable you to understand how the regulated power supply operates. Refer to the schematic shown in Figure 4.

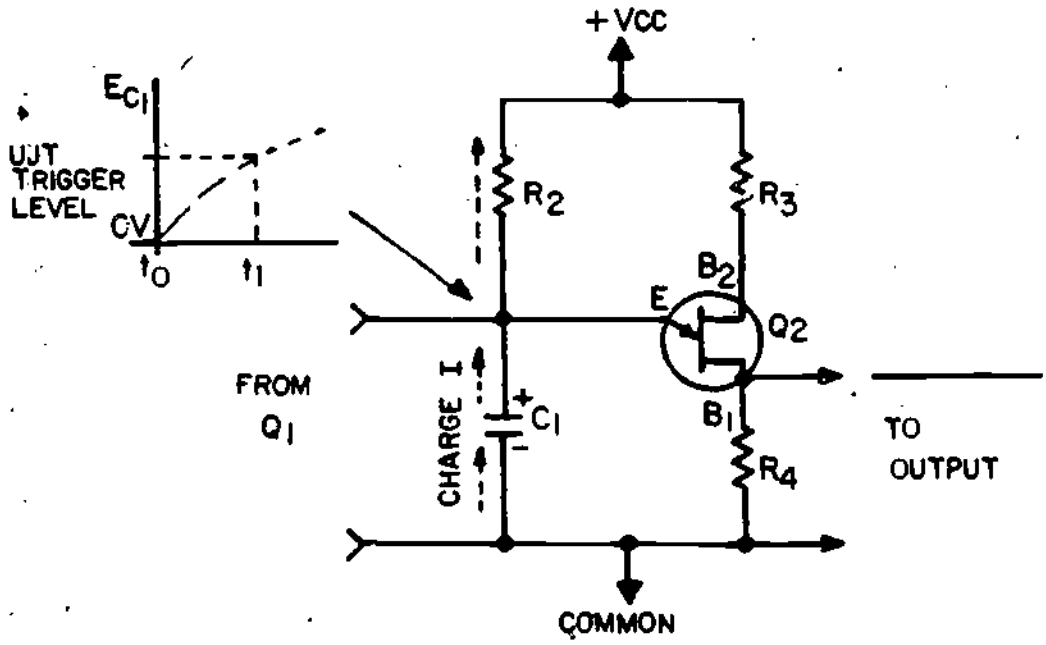


Figure 4

PULSE GENERATOR CIRCUIT

Besides a schematic for the control circuit, Figure 4 shows an input and an output waveform. Notice that during the time cycle T0 through T1, C1 is charging toward $V_{CC}$ through R2. Since the UJT has not yet fired, there is no output from the power supply

understand the operation of the control circuit, each of the circuit's operations will be discussed separately. Notice Q1 and its associated components function to convert the DC error voltage into a resistance which is in parallel with C1. When a positive error is applied to the base of Q1, this increases the forward bias of the transistor and produces a smaller internal resistance. Because the transistor is in parallel with C1, the transistor influences the time it takes for the capacitor to charge. This is one of the essential concepts relating to this type of control circuit.

A less positive error voltage increases/decreases_____the forward bias of Q1 and produces larger/smaller _____ transistor internal resistance.

---

decreases, larger

6. Again refer to the schematic shown in Figure 3. Pay particular attention to the components which make up the pulse generator circuit. You should remember from Lesson 2, Module 25 that the UJT trigger circuit generates output pulses based on the time it takes the capacitor to charge to a voltage sufficient to forward bias the emitter-base 1 junction of the UJT. R2 and C1 are fixed components that determine this charging time. Thus, Q1 will determine, based upon the error voltage applied to its base, the time required for C1 to charge to the UJT trigger level.

After C1 discharges, the emitter-base one junction of the UJT becomes forward/reverse_____biased and begins/stops_____ conducting.

---

_____ _____

reverse, stops

9. So far we have concentrated on the effect of the charge and discharge of C1 in the pulse generator circuit. We will now see how Q1 affects the pulse generator circuit. Refer to the schematic shown in Figure 6 and the waveforms which are associated with this schematic.

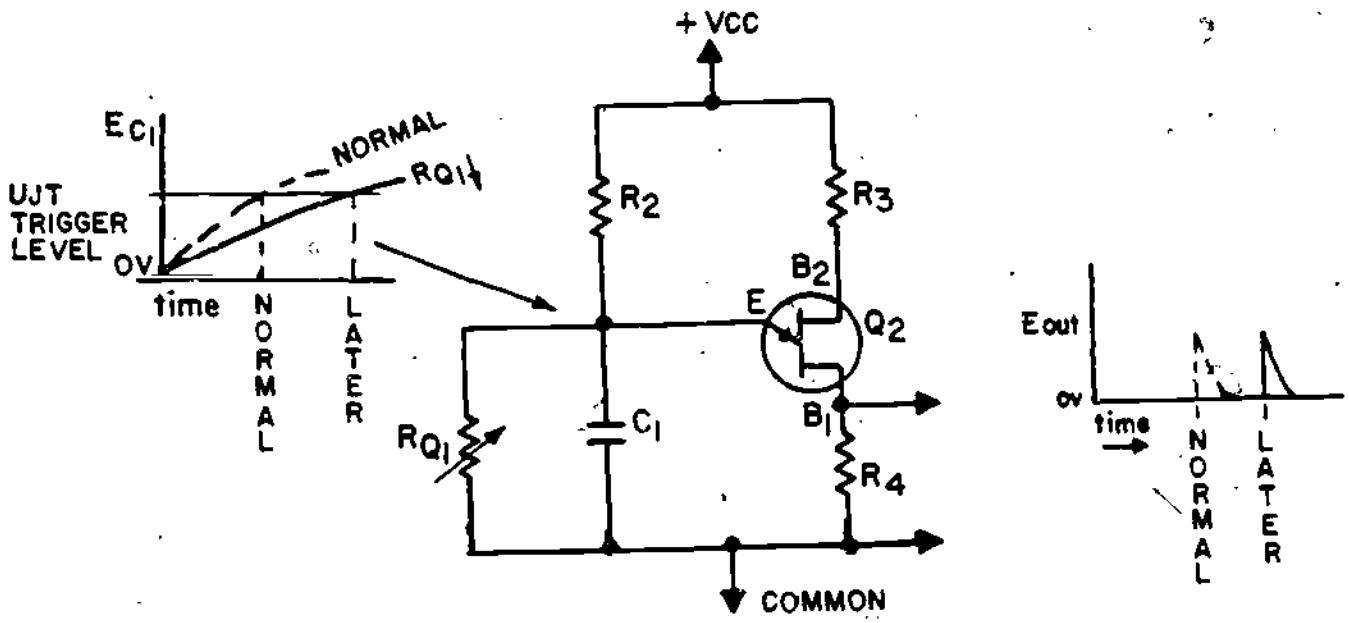


Figure 6

PULSE GENERATOR CIRCUIT INPUT-OUTPUT

Changes in the input cause changes in the forward bias of Q1 and a corresponding increase or decrease in the resistance of Q1. If you do not recall the relationship of these two concepts, refer to Lesson 2 of this module, or study Module 21.

During the time frame T0 through T1, C1 charges/discharges

_____.

---

_____

charges _____

8. Refer to the schematic shown in Figure 5.

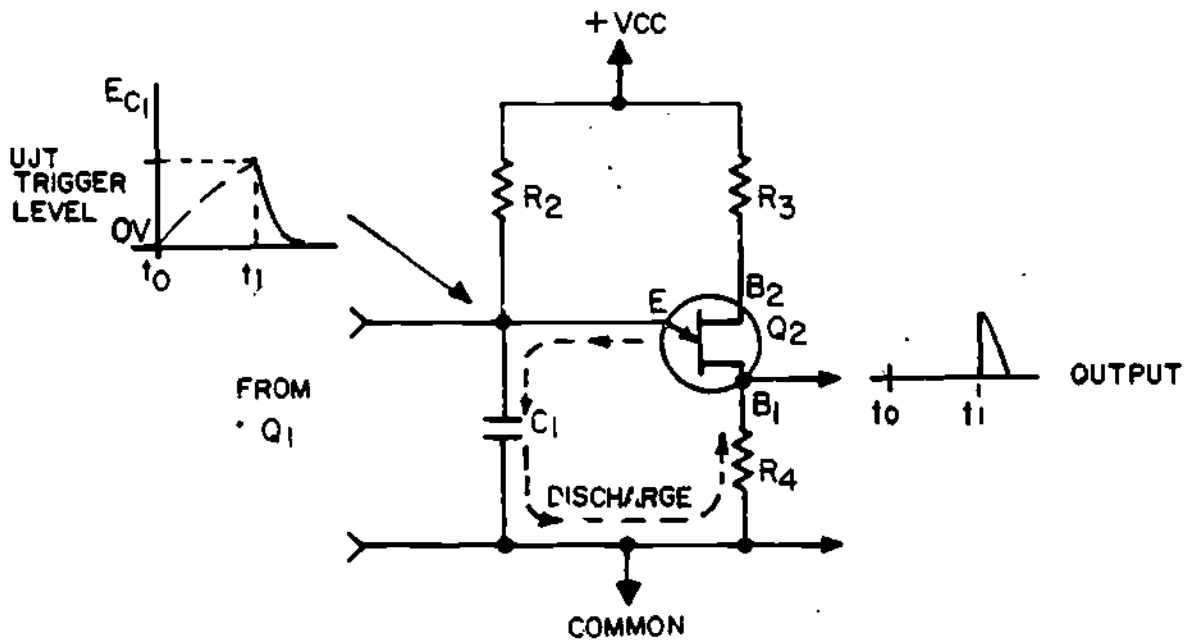


Figure 5

PULSE GENERATOR CIRCUIT

Once the voltage across C1 reaches the trigger level of the UJT, the UJT fires. At this time, the emitter-base 1 junction becomes forward biased and therefore, conducts. This allows C1 to discharge rapidly through R4 to produce the output pulse. The current path is indicated by the broken lines in the figure. Once the capacitor discharges, the emitter-base 1 junction of the UJT again becomes reverse-biased and current no longer flows. C1 now begins to charge again.

The waveforms shown on the left of Figure 6 indicate the trigger time of the UJT under normal operating conditions (dotted) and when the output voltage of the power supply is increased (solid).

The waveforms shown on the right hand side of the schematic show a time line together with the corresponding output waveforms for the control circuit when it fires at a normal time and when it fires at a later time. A more positive error voltage causes Q1's resistance to decrease. The decrease in resistance of Q1 reduces the voltage at the top of C1 and increases the time required for C1 to charge to the trigger level, of the UJT. This results in a later triggering action.

A decrease in the power supply's output voltage causes a less positive error voltage and a corresponding increase in the transistor's resistance. This increased resistance of Q1 increases the voltage at the top of C1 and decreases the time required for C1 to charge to the trigger level of the UJT. In this case, when the output voltage decreases the UJT will trigger sooner. Be sure you understand how increases and decreases in the output voltage of the power supply change the pulse or trigger time of the UJT before proceeding further with this lesson.

Any increase in the DC output voltage of the power supply causes a/an increase/decrease_____in the forward bias of Q1 and a/an increase/decrease_____in the transistor's resistance.

---

_____

increase, decrease

1. d. all of the above

2. a. increase

3. a. sooner

IF YOUR ANSWERS MATCH THE CORRECT ANSWERS YOU MAY GO TO TEST FRAME 19. OTHERWISE GO BACK TO FRAME 5 AND TAKE THE PROGRAMMED SEQUENCE AGAIN BEFORE TAKING TEST FRAME 10 AGAIN.

11. Thus far we have been concerned with circuits which control the SCR regulated power supply. A schematic for a typical SCR power supply together with regulator control circuitry is shown on the fold out at the end of this lesson. This diagram is the schematic for the NIDA SCR regulated power supply which you will use as part of the job program for this lesson. You will also refer to this schematic diagram throughout the remainder of the lesson.

Notice particularly that the rectifier and filter circuit is designated with heavy lines and that the regulator control circuitry is shown with light lines. Also notice that there are two bridge rectifiers shown. The main bridge rectifier consists of SCRs Q3 and Q4 and diodes CR5 and CR6. The purpose of this bridge is to provide a positive DC output voltage. This voltage is regulated by Zener diode CR1 and R1. The output of this bridge circuit is [illegible] to provide a positive regulated DC voltage to Q1 and Q2 in the control circuit.

---

no response required

(10.) THIS IS A TEST FRAME. COMPLETE THE TEST QUESTIONS AND COMPARE YOUR ANSWERS WITH THE CORRECT ANSWERS GIVEN AT THE TOP OF THE PAGE FOLLOWING THE TEST QUESTIONS.

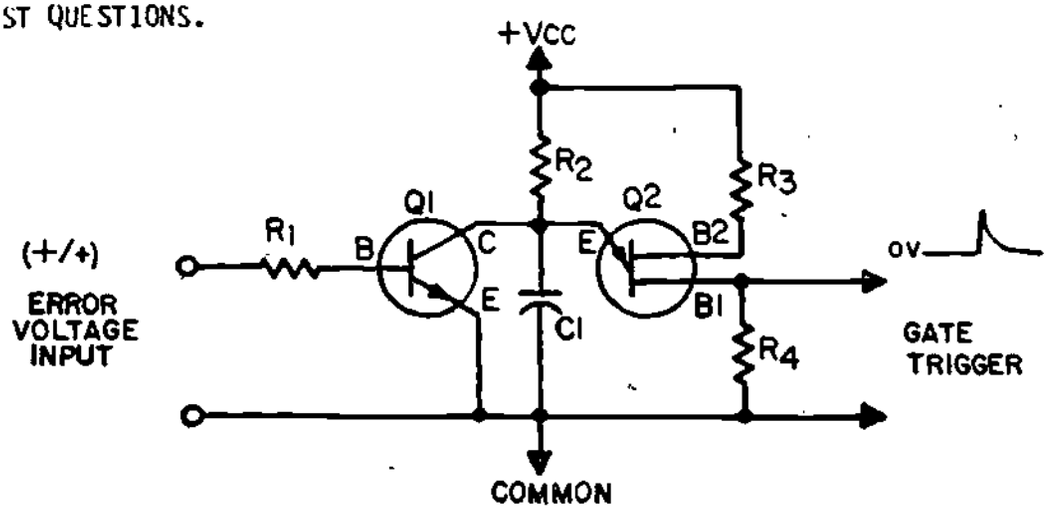


1. The time for C1 to charge to the UJT trigger level depends on the
   a. type of error voltage (more/less positive)
   b. value of C1
   c. value of R2
   d. all of the above
2. A less positive error voltage will cause the internal resistance of Q1 to
   a. increase
   b. decrease
   c. have no effect
   d. can't tell based on information given
3. An increase in the resistance of Q1 will cause the UJT to trigger
   a. sooner
   b. later
   c. have no effect
   d. can't tell based on information given

The voltage applied to the control circuits is _____ dependent on/independent of the regulated output voltage.

---

independent of

---

(14.) Since you are already familiar with how bridge type SCR rectifiers work, the remaining frames will concentrate on the control circuitry. Recall that the control circuitry is designated with light lines on the schematic. One way to help you understand how the control circuit functions is to describe the operation of the various components of the control circuit when changes take place. Assume the normal regulated output voltage from the supply is 15 volts from TP3 to ground. Now if the load current decreases, the regulated output voltage at TP3 would tend to increase to say 16 volts. This more positive output voltage would act to increase the forward bias on Q1. The increased forward bias of Q1 results in a change in the transistor's resistance. Because of the increased current flow between the collector and emitter of Q1, additional current flows through R5.

When the load current decreases, the forward bias of Q1 will increase/decrease _____ and more/less _____current will flow through Q1.

---

increase and more

15. Because of the increased current through R5 the voltage drop across this resistor increases. The total voltage drop across R5 and C1 approximates the 12 volts across Zener diode CR1. The increased voltage drop across R5 causes a corresponding decrease in the voltage drop across C1. The smaller voltage drop across the capacitor delays the time it takes C1 to charge to its maximum potential and thus the UJT trigger level.

(12) As you study the schematic notice that CR5 and CR6 are used in both of the bridge circuits. Since these diodes are used in both circuits, they handle more current than CR3 and CR4. If you have concluded that the diodes used in the control circuit, specifically CR3 and CR4, require relatively little current you are correct. A closer examination of the schematic will reveal that in addition to CR5 and CR6, other components are common to both rectifiers. These components are R8, R9, and R17.

The diodes which are common to both bridge circuits are _____ and _____.

CR5 and CR6 or CR6 and CR5

(13) The regulated 12 volts felt across Zener diode CR1 is used as the source voltage for the control circuits. By regulating this voltage, an improvement in overall stability of the control circuits is achieved. The control circuits have a critical effect on the output voltage, therefore any improvement in their action results in better output voltage regulation.

You should note on the schematic that the 12 volts for the control circuits are "stacked" on top of the main power supply output voltage line. This circuit arrangement amounts to "series-aiding" the two voltages. However, the control circuit common is actually the main output voltage positive line (terminal 18 to SCR cathodes). Thus, the control circuits only see 12 volts that is independent from the main supply. You should confirm this fact by tracing out the voltage across CR1 and C3 to ground.

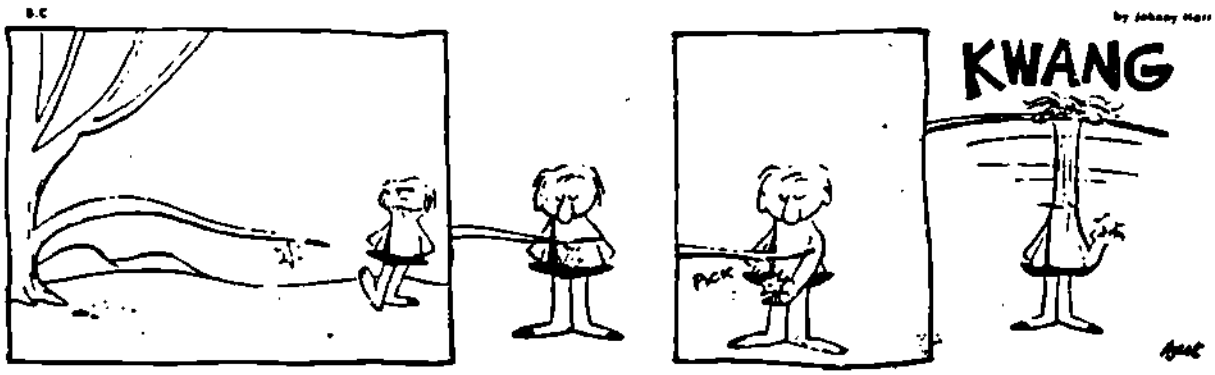


**If you don't know what it does, don't fool with it!**

840-TB-870

An increase in the voltage drop across R5 causes a/an increase/ decrease _____ in voltage drop across C1.

---

a decrease

(16.) Because C1 takes longer to charge, the time to forward bias the emitter-base 1 junction Q2 is delayed. This causes the UJT to fire later and therefore the SCR "turn-on" time is delayed.

When C1 takes longer to charge, the UJT will fire earlier/later _____.

---

later

(17.) Because the UJT, triggers at a later time, the SCR is gated on for a shorter period of time. Recall that tne amount of time an SCR is gated on determines the amount of current which will flow. In this case, because current flows for a shorter period of time, the output of the power supply returns to normal. Study these schematics again and try to visualize what happens when the load current increases or when there is a change in the input voltage.

---

no response required

1. b. increase
2. c. decrease
3. a. a longer charging time for C1
4. b. sooner

IF YOUR ANSWERS MATCH THE ANSWERS GIVEN ABOVE PROCEED TO TEST FRAME 22, IF YOUR ANSWERS DO NOT MATCH THE ANSWERS GIVEN ABOVE RETURN TO FRAME 11 AND TAKE THE PROGRAMMED INSTRUCTION AGAIN.

19. To further help you understand how the regulated SCR power supply operates, both input and output waveforms are shown. The waveforms shown in Figure 7 illustrate how the power supply operates under normal conditions and how it operates with an increased load current or decreased input voltage. The solid line waveforms refer to the normal operating condition and the dotted lines depict the waveforms when the circuit compensates for an increase in load current or a decrease in input voltage.

228

18. THIS IS A TEST FRAME. ANSWER THE TEST QUESTIONS AND COMPARE YOUR ANSWERS WITH THE ANSWERS GIVEN AT THE TOP OF THE PAGE FOLLOWING THE TEST QUESTIONS. REFER TO THE FOLD-OUT SCHEMATIC FOR THE SCR REGULATED POWER SUPPLY IN ORDER ANSWER THE QUESTIONS.

1. Increasing the base-emitter forward bias of Q1 will_____ the current through R5

   a. decrease

   b. increase

   c. have no effect on

   d. stay the same

2. When the voltage drop across R5 increases, the voltage drop across C1 will

   a. stay the same

   b. increase

   c. decrease

   d. reverse polarity

3. Any increase in the voltage drop across R5 results in

   a. a longer charging time for C1

   b. a shorter charging time for C1

   c. no change in the charging time for C1

   d. cannot determine based on information given

4. When C1 charges faster, the UJT will fire

   a. later

   b. sooner

   c. at the same time

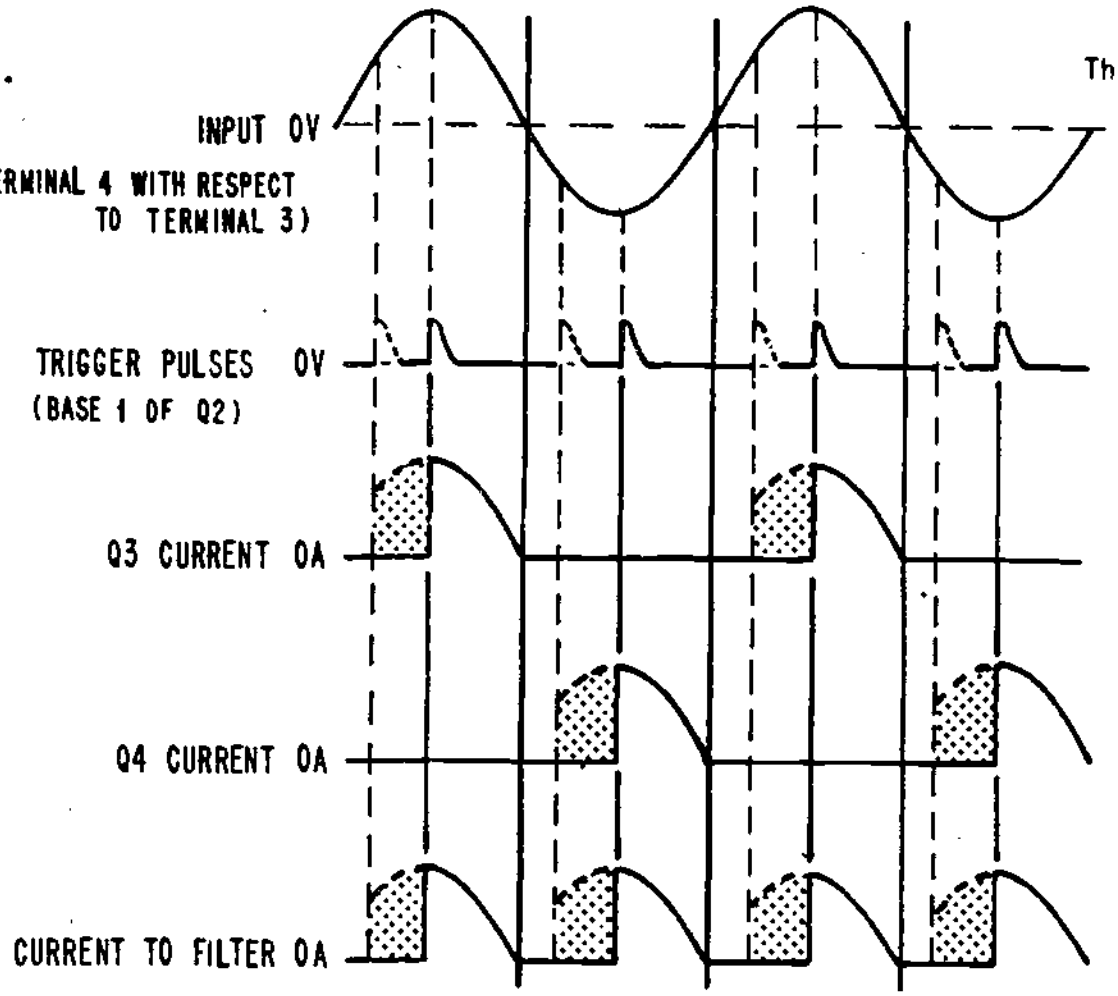


NORMAL OPERATING WAVEFORMS

INCREASED LOAD CURRENT/DECREASED INPUT VOLTAGE WAVEFORMS

Figure 7

SCR CONDUCTION TIMES

The control circuit causes Q2 to trigger the SCRs earlier to compensate for a/an _____ in load current or a/an _____ in input voltage.

a. increase, increase

b. decrease, decrease

c. decrease, increase

d. increase, decrease

---

230

d. increase, decrease

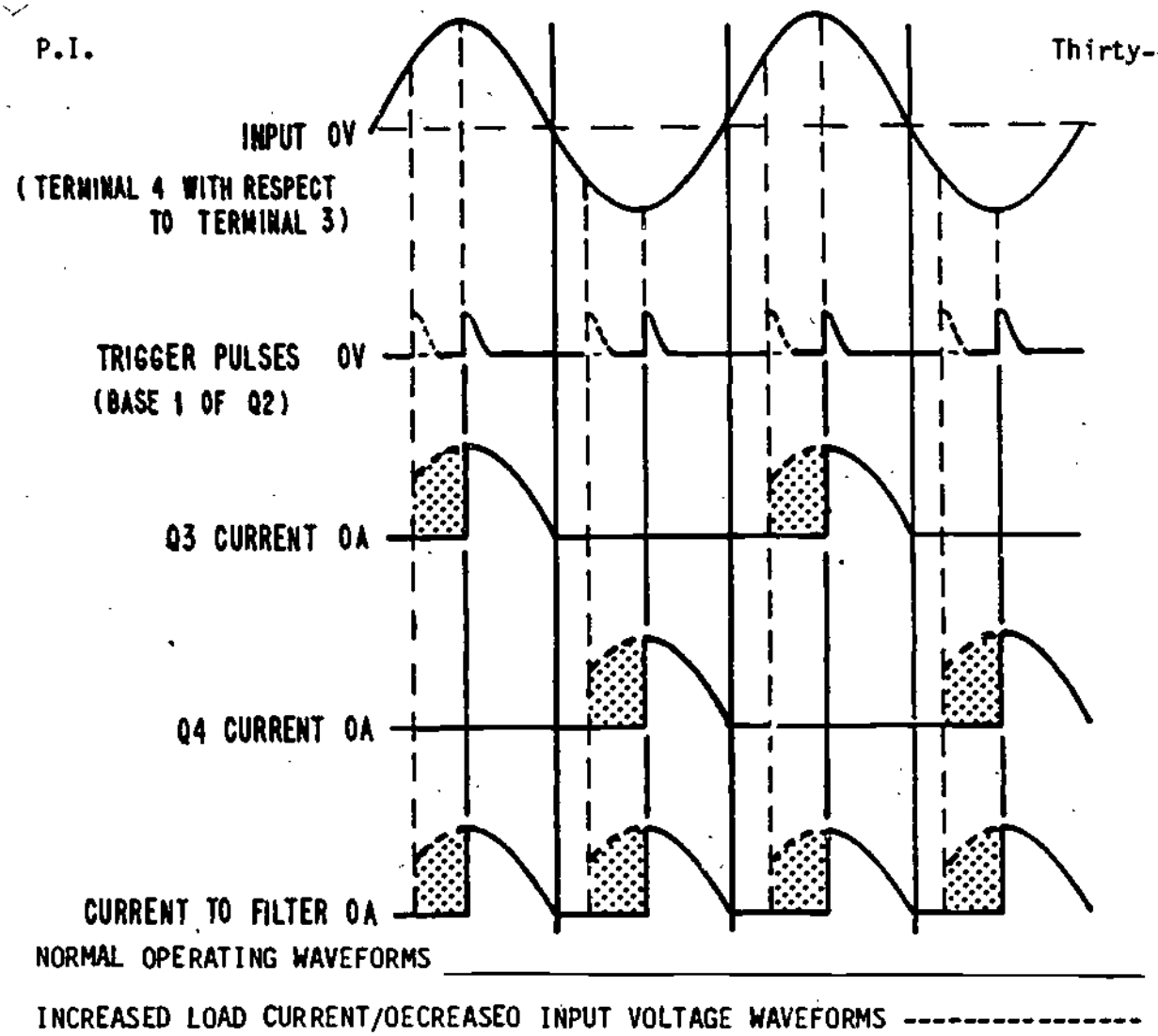


Figure 7

SCR CONDUCTION TIMES

Notice that the bottom three waveforms reflect current output. When operating normally the SCRs are triggered "on" approximately at the mid point of the sine wave cycle. Q3 is triggered or fired during the positive alternation and Q4 is triggered during the negative alternation. To compensate for an increased load current or decrease in input voltage, the control circuit causes the UJT to trigger the SCRs earlier as shown by the dotted lines. Make sure you understand the conditions which will cause the UJT to trigger the SCRs earlier before proceeding further.

A decrease in load current or an increase in input voltage _____

_____.

a. causes the UJT to trigger the SCRs earlier

b. causes the UJT to trigger the SCRs later

c. has no effect on the firing time of the SCRs

d. must be directly proportional to the charging time of C1.

---

b. causes the UJT to trigger the SCRs later

(21.) Again refer to the schematic for the SCR regulated power supply and notice that R17 is variable. This allows for the adjustment of the forward bias of Q1, which ultimately affects the charging time for C1, and the pulse or triggering time of Q2. When the wiper arm of R17 is rotated clockwise, the forward bias voltage for Q1 is less, this increases the resistance of Q1 and the charging voltage for C1. Because of the increase in charging voltage, C1 charges faster. This causes the UJT to pulse earlier, thereby firing the SCRs sooner and providing an increase in output voltage. Study the schematic in order to understand what happens when the wiper arm of R17 is rotated counterclockwise.

---

no response required

(20.) The waveforms shown in Figure 8 indicate what happens when the load decreases or the input voltage increases.

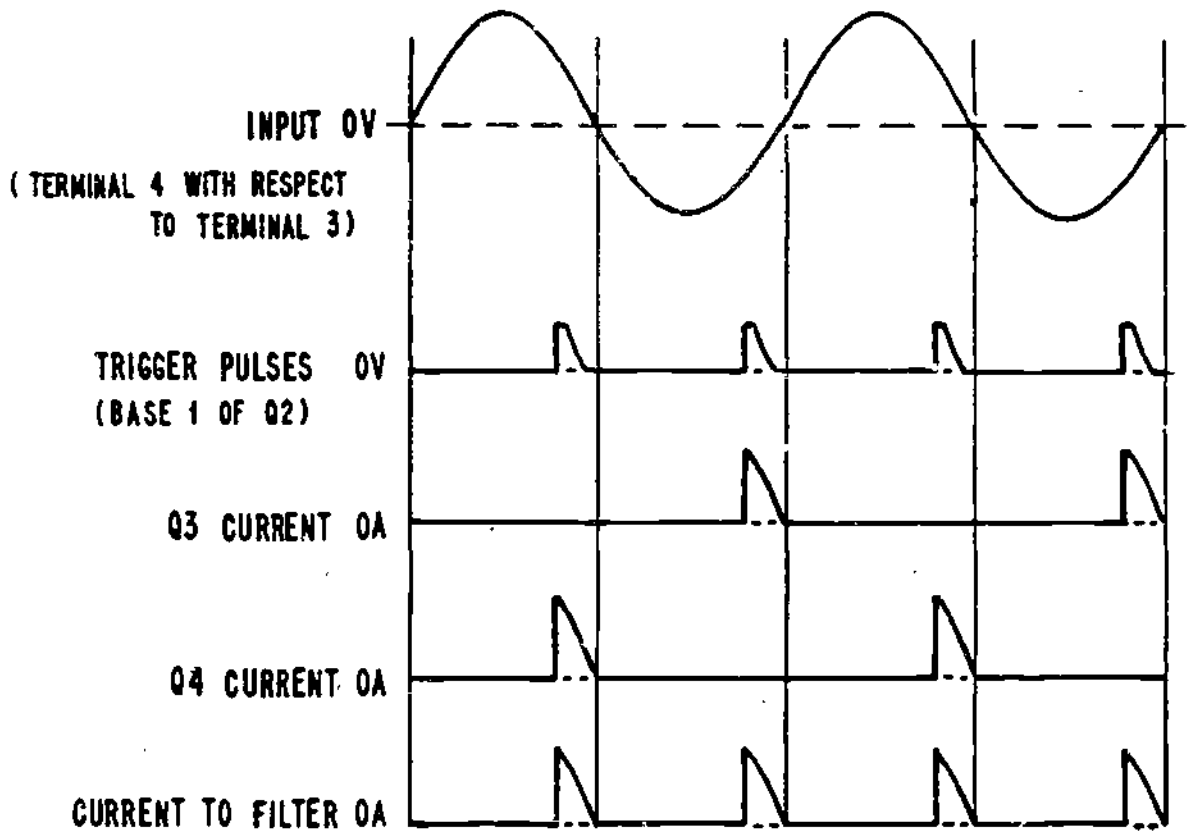


Figure 8

SCR CONDUCTION TIMES

When studying the waveforms refer also the the schematic for the SCR regulated power supply. A decrease in load current, or an increase in input voltage, increases the voltage at test point 3. This causes additional current through Q1 and increases the voltage drop across R5. Because of the increased voltage drop across the resistor, the charging time for C1 is delayed. Since C1 reaches maximum potential later, the trigger, or pulse time, of Q2 is also delayed. This results in a later turn on or gating time for the SCRs.

4. Any increase in the voltage at TP3 will

   a. have no effect on the UJT triggering time

   b. cause the UJT to trigger later

   c. cause the UJT to trigger sooner

   d. cause an overload for the control circuit

5. Q2 triggers SCRs Q3 and Q4 earlier to compensate for a/an

   a. increase in load current or increase in input voltage

   b. decrease in load current or decrease in input voltage

   c. increase in load current or decrease in input voltage

   d. decrease in load current or increase in input voltage

22. THIS IS A TEST FRAME. COMPLETE THE TEST QUESTIONS AND COMPARE YOUR ANSWERS WITH THE ANSWERS GIVEN ON THE TOP OF THE PAGE FOLLOWING THE TEST QUESTIONS.

REFER TO THE FOLDOUT SCHEMATIC FOR THE SCR REGULATED POWER SUPPLY IN ORDER TO ANSWER THE QUESTIONS IN THIS TEST FRAME.

1. The conduction time of Q3 and Q4 depends on the pulse or triggering time of
   a. Q1
   b. Q2
   c. CR1
   d. CR2
2. The output voltage of the SCR power supply may be increased by
   a. applying a negative voltage to the SCR gates
   b. holding the SCR gate voltage constant
   c. triggering the SCRs sooner
   d. delaying the triggering time of the SCRs
3. The variable component which influences the charging time of C1 is
   a. Q1
   b. Q2
   c. R2
   d. C1

1. b. Q2

2. c. triggering the SCRs sooner

3. a. Q1

4. b. cause the UJT to trigger later

5. c. an increase in load current or decrease in input voltage

AT THIS POINT, YOU MAY TAKE THE LESSON PROGRESS CHECK. IF YOU ANSWER ALL SELF-TEST ITEMS CORRECTLY, PROCEED TO THE JOB PROGRAM. IF YOU INCORRECTLY ANSWER ONLY A FEW OF THE PROGRESS CHECK QUESTIONS, THE CORRECT ANSWER PAGE WILL REFER YOU TO THE APPROPRIATE PAGES, PARAGRAPHS, OR FRAMES SO THAT YOU CAN RESTUDY THE PARTS OF THIS LESSON YOU ARE HAVING DIFFICULTY WITH. IF YOU FEEL THAT YOU HAVE FAILED TO UNDERSTAND ALL, OR MOST, OF THE LESSON, SELECT AND USE ANOTHER WRITTEN MEDIUM OF INSTRUCTION, AUDIO/VISUAL MATERIALS (IF APPLICABLE), OR CONSULTATION WITH LEARNING CENTER INSTRUCTOR, UNTIL YOU CAN ANSWER ALL SELF-TEST ITEMS ON THE PROGRESS CHECK CORRECTLY.


GOOD COMMUNICATIONS HAVE WON BATTLES

As you study this block diagram, you should note that the SCR power supply is a type you examined in Lesson 3; for example a Bridge rectifier and filter. A sample of the DC output voltage from the supply is used to establish a DC error voltage for the control circuit. The control circuit will convert the DC error into time varying gate triggers. The gate triggers are used to adjust the conduction time of the SCRs in the main SCR power supply to compensate for changes in input voltage or load current and maintain a constant output voltage.

A typical control circuit for controlling the output of the SCR power supply is shown in Figure 2.

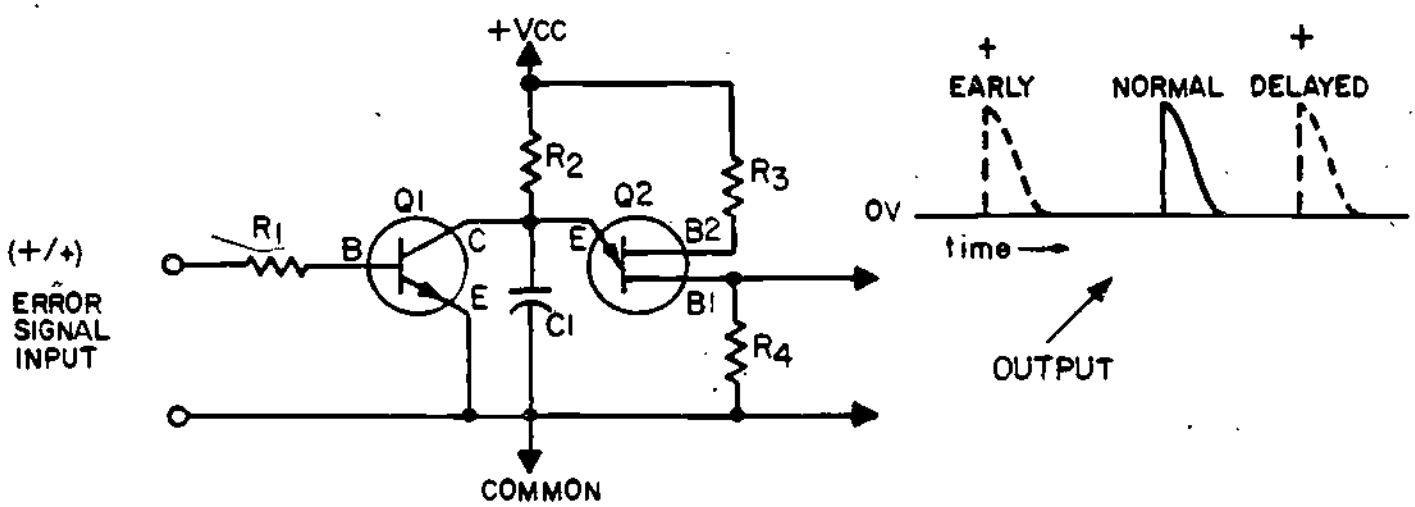


Figure 2

CONTROL CIRCUITS

The control circuit is made up of two interrelated, yet different circuits. The control amplifier circuit consists of Q1, R1 and R2. The second circuit is a pulse generator. This circuit is similar to the unijunction trigger circuit you studied in Lesson 2 of Module 25. It is used to pulse, or fire, the SCRs in the power supply. The triggering frequency of the total control circuit is determined by the action of C1 and the combined resistance of Q1 and R2. Since Q1's internal resistance is in parallel with C1, it influences the charging time of C1.

When the capacitor charges fast, the forward bias between the emitter and base 1 of the unijunction Q2 is achieved quickly. When sufficient forward bias is present between the emitter and base 1 of the unijunction, it fires the SCR. The waveforms shown on the right hand side of the schematic indicate firing times in relation to times when the SCR is fired early, at the regular time, and finally when the firing time is delayed.

NARRATIVE
LESSON 4

## SCR Regulated Power Supplies

In Lessons 2 and 3 you learned about voltage and current power supplies and the advantage of the SCR power supply over a conventional diode power supply. The purpose of this lesson is to acquaint you with the control circuitry which regulates SCR power supply circuits.

Recall that the major advantage of the SCR power supply is that it provides maximum output power with minimum internal power loss.

Because the conduction time of the SCRs in an SCR power supply determines the output voltage of the power supply, a method for controlling the conduction time has been developed. By controlling the conduction time of the SCRs, the output voltage and ultimately the power which reaches the load are controlled. Regulating, or controlling, the conduction time of the SCRs is also used to compensate for changes in input voltage or load current. This assures a constant regulated DC output.

The basic block diagram of an SCR regulated power supply is showr in Figure 1.

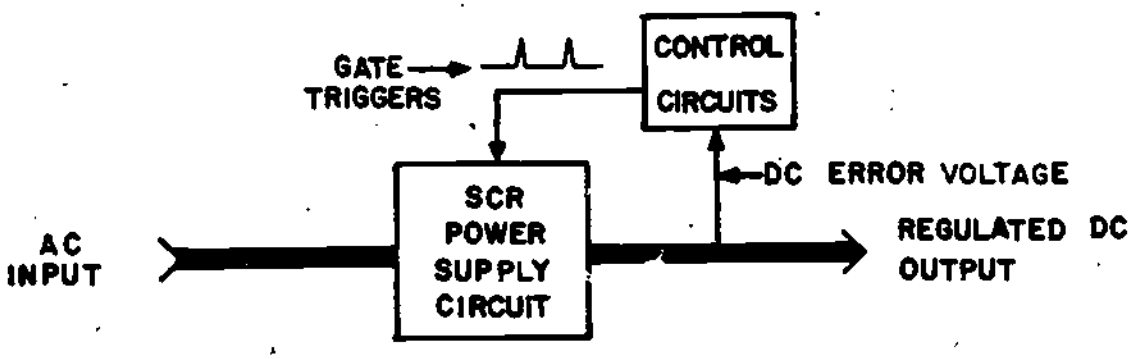


Figure 1

SCR REGULATED POWER SUPPLY

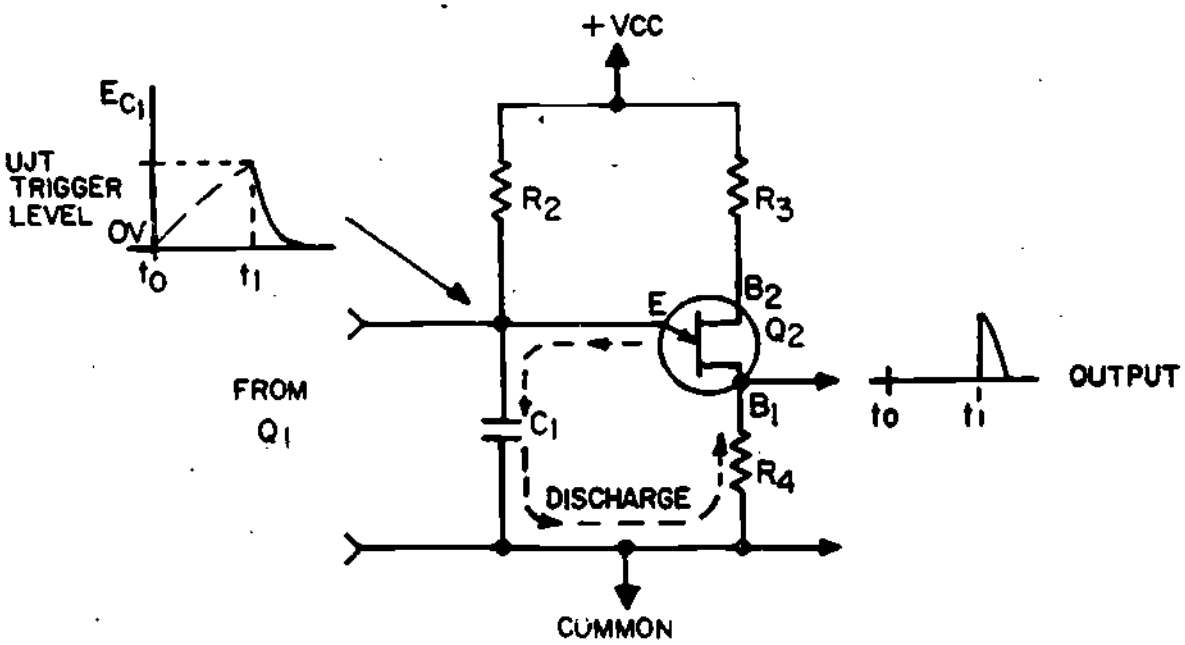


Figure 3

PULSE GENERATOR

During time frames T0 through T1, there is no output from the pulse generator circuit, since C1 has not yet charged to the firing level of Q2. When the capacitor reaches the firing level of Q2, the emitter-base 1 junction of the UJT becomes forward biased. This causes the UJT to conduct and allows C1 to discharge through resistor R4. The capacitor discharge is shown as a waveform (commencing at time T1) to the right of the schematic. Recall that once the UJT becomes forward biased it conducts and triggers the power supply SCRs. Q2's output gates the SCRs on. After C1 discharges, the UJT is again reverse biased and current no longer flows between emitter-base 1. Concerning the SCR, recall that the SCR gate turns or triggers the SCR "on" until the AC input voltage reverse biases the SCR.

Thus far, the effect of the charging and discharging of C1 in the pulse generator circuit has been described. Since Q1 effects the pulse generator circuit it is necessary to understand its operation in relation to this circuit. The schematic diagram shown in Figure 4 and associated waveforms will help you understand how this transistor operates in the pulse generator circuit. Q1 is depicted as a variable resistor in the schematic to convey the idea that its resistance changes depending on the change in its forward bias. These changes effect the charging time of C1 and ultimately the firing or triggering time of the UJT.

Refer to the schematic shown in Figure 2, and recall that changes in the forward bias of Q1 result in corresponding changes in the resistance of the transistor. If you cannot recall this relationship it will be to your advantage to re-study Lesson 2 of this module. Now consider what happens when a positive error voltage is applied to the base of Q1, as a result of an increased input voltage or decreased load current. The larger forward bias on Q1 causes its internal resistance to decrease. Since the internal resistance of Q1 parallels C1, the voltage that attempts to charge C1 is reduced. This increases the time it takes to charge C1 to the firing potential for unijunction transistor Q2. This results in a later turn-on time for the SCR. Take some time and consider what happens when a less positive error voltage is applied to the collector of Q1. The schematic shown in Figure 3 is for the UJT trigger or pulse circuit. Understanding how C1 and the UJT operate to trigger the SCR, will enable you to understand how a regulated power supply operates. Waveforms have been shown adjacent to the schematic together with time frames in order to help you understand the total operation of the pulsing circuit.

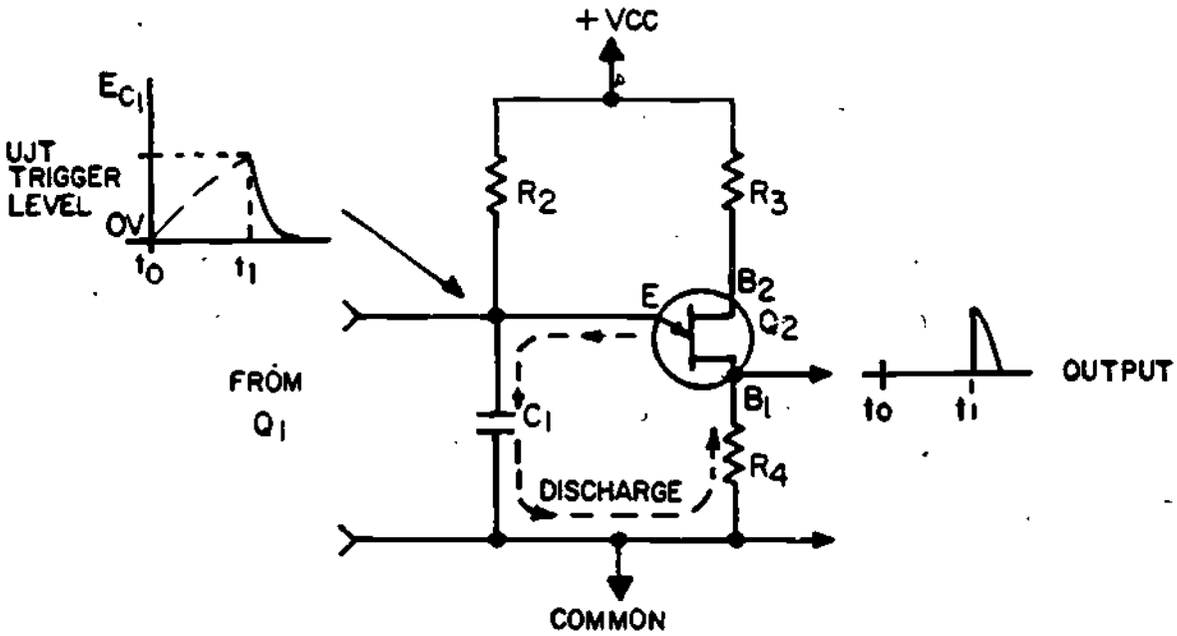


Figure 3

PULSE GENERATOR

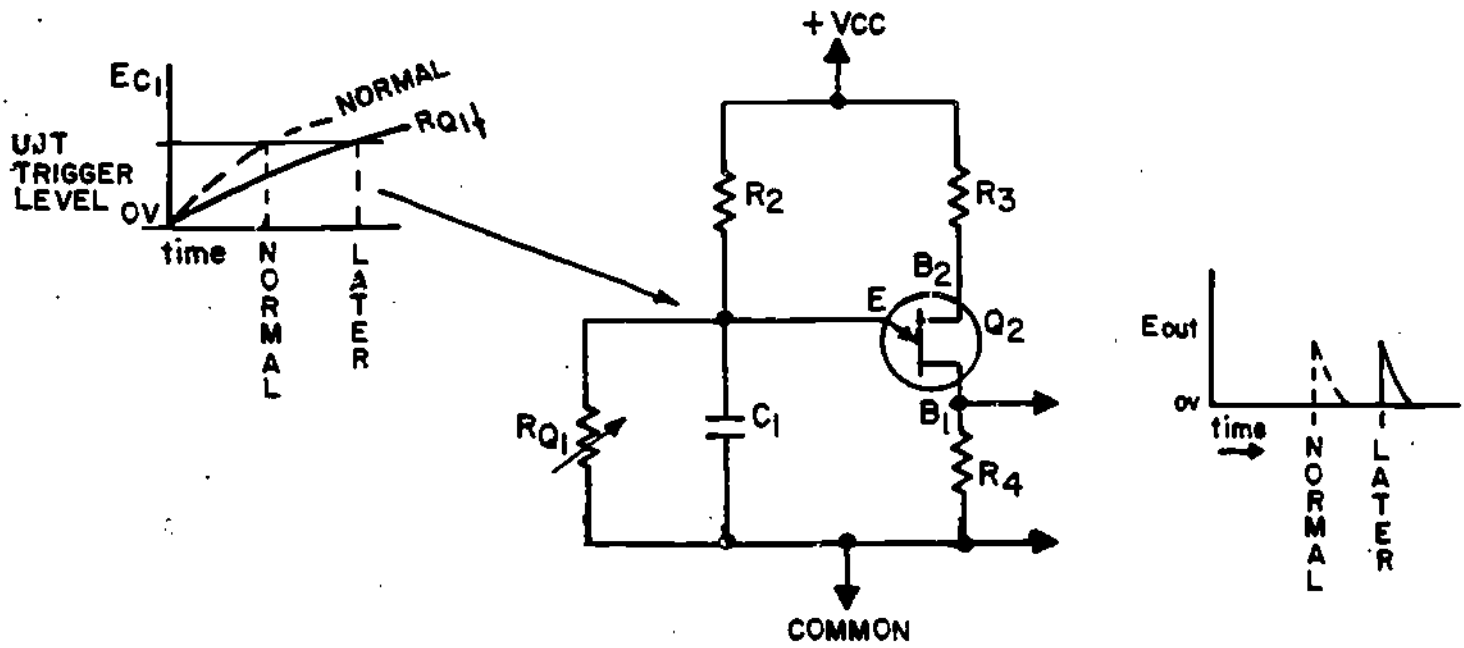


Figure 4

PULSE GENERATOR ACTION

When you study the power supply circuitry you notice that there are two bridge type rectifiers shown. The main bridge rectifier consists of SCRs Q3 and Q4, and diodes CR5 and CR6. The other bridge circuit is comprised of CR3, CR4, CR5, and CR6. The function of the conventional diode bridge circuit is to provide a positive DC output voltage which is regulated by R1 and CR1. This regulated 12 volts is used as an independent source voltage for Q1 and Q2 in the control circuits. By regulating the control circuit voltage, an improvement in stability is noted, thus providing better regulation of the main SCR power supply. You should examine the schematic to see that this regulated 12 volts is "stacked" on top of the main power supply voltage output line. For example, if you were to measure the voltage at the cathode of CR1 to ground, you would find that this voltage was equal to 12 volts plus the main regulated output voltage. You can see why this occurs by tracing out the circuit from the cathode of CR1, across C3 to ground. Of course the control circuits see only 12 volts.

The schematic shows that CR5 and CR6 are common to both of the bridge circuits. Because these diodes are used in both circuits they conduct more current than CR3 and CR4. CR3 and CR4 are only used in the control circuitry and therefore, conduct very little current. A close examination of the schematic will reveal that R8, R9 and R17 are components which are also common to both rectifier circuits.

Because you are already familiar with how bridge type SCR rectifiers work, the remainder of this lesson will concentrate on the regulator control circuitry. Remember that the control circuit is shown with light

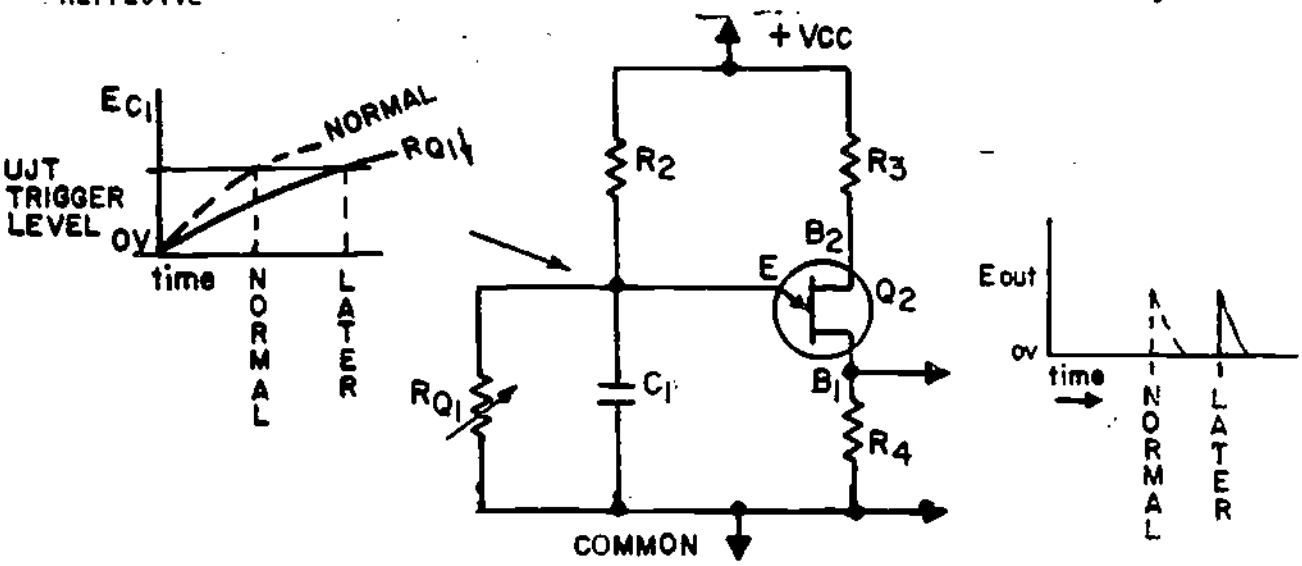


Figure 4

PULSE GENERATOR ACTION

The waveform at the left hand side of the schematic shows both the normal triggering conditions and the changes when the load current decreases or the input voltage of the power supply increases.

When a more positive error voltage is applied as input, Q1 becomes forward biased and its internal resistance decreases. The smaller resistance of Q1 reduces the voltage at the voltage divider junction of R2 and C1, thereby increasing the time required for C1 to charge and delaying the pulse or trigger time of the UJT. Because the UJT triggers the SCRs later, conduction time is reduced and output voltage of the power supply is reduced.

Refer again to the schematic and consider the action of Q1 when the load current increases or the input voltage drops. Either of these conditions cause Q1's resistance to increase and therefore C1 charges quicker. This results in the UJT being triggered earlier resulting in a greater output. Remember increases in load current or decreases in input voltage, result in an early firing time for the UJT and SCR whereas a decrease in load current or an increase in input voltage result in a later UJT firing time and turn on for the SCRs. Make sure you understand these concepts before you proceed further with this lesson.

So far the instruction has been concerned with circuits which control the SCR power supply. The schematic for an SCR power supply together with regulator control circuitry is shown on the fold-out at the end of this module. This schematic is for the NIDA SCR regulated power supply which you will be required to use as part of the job program and for the remainder of the lesson.

To help you understand the interrelationships of the circuitry, the rectifier and filter circuit has been designated with heavy lines and the regulator, or control circuitry, is shown with light lines.

The waveforms shown in Figure 6 indicate what happens when the load decreases or the input voltage increases. Notice that in this case the trigger of the UJT fires the SCRs at a later time and the SCRs conduct for a shorter duration. Study the waveforms shown in Figures 5 and 6 in conjunction with the fold-out schematic for the NIDA power supply and control circuitry.

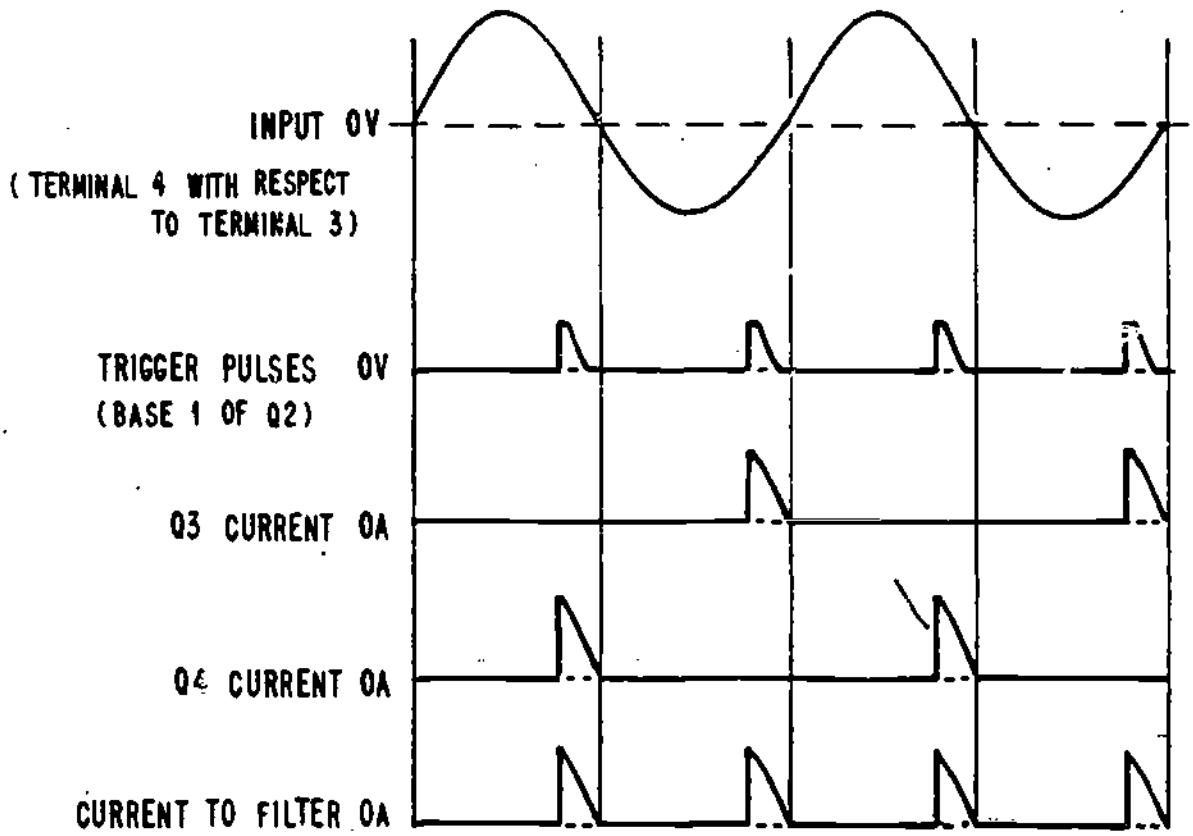


Figure 6

DECREASE IN LOAD CURRENT OR INCREASE IN INPUT VOLTAGE WAVEFORMS

lines on the schematic. The operation of the various components which make up the circuit will help you understand the total operation of the NIDA power supply. If the load current decreases, the voltage at TP 3 shown on the right hand side of the schematic, will be greater. Because of this increased potential, the base-emitter forward bias of Q1 increases. This results in a decrease in the transistor's resistance and additional current flows through R5. Because of this, the voltage drop across R5 increases. This delays the time it takes C1 to charge to the UJT trigger level and causes the unijunction to fire later. Since the UJT fires later, the SCR turn-on time is delayed. Again refer to the schematic and consider what happens when the load current increases or the voltage at test point 3 decreases.

The input and output waveform shown in Figure 5 should also help you understand how the power supply operates. Normal operation is shown with a solid line and the broken lines show how the circuit compensates for an increase in load current or a decrease in the input voltage. Please notice that the bottom three waveforms indicate current output.

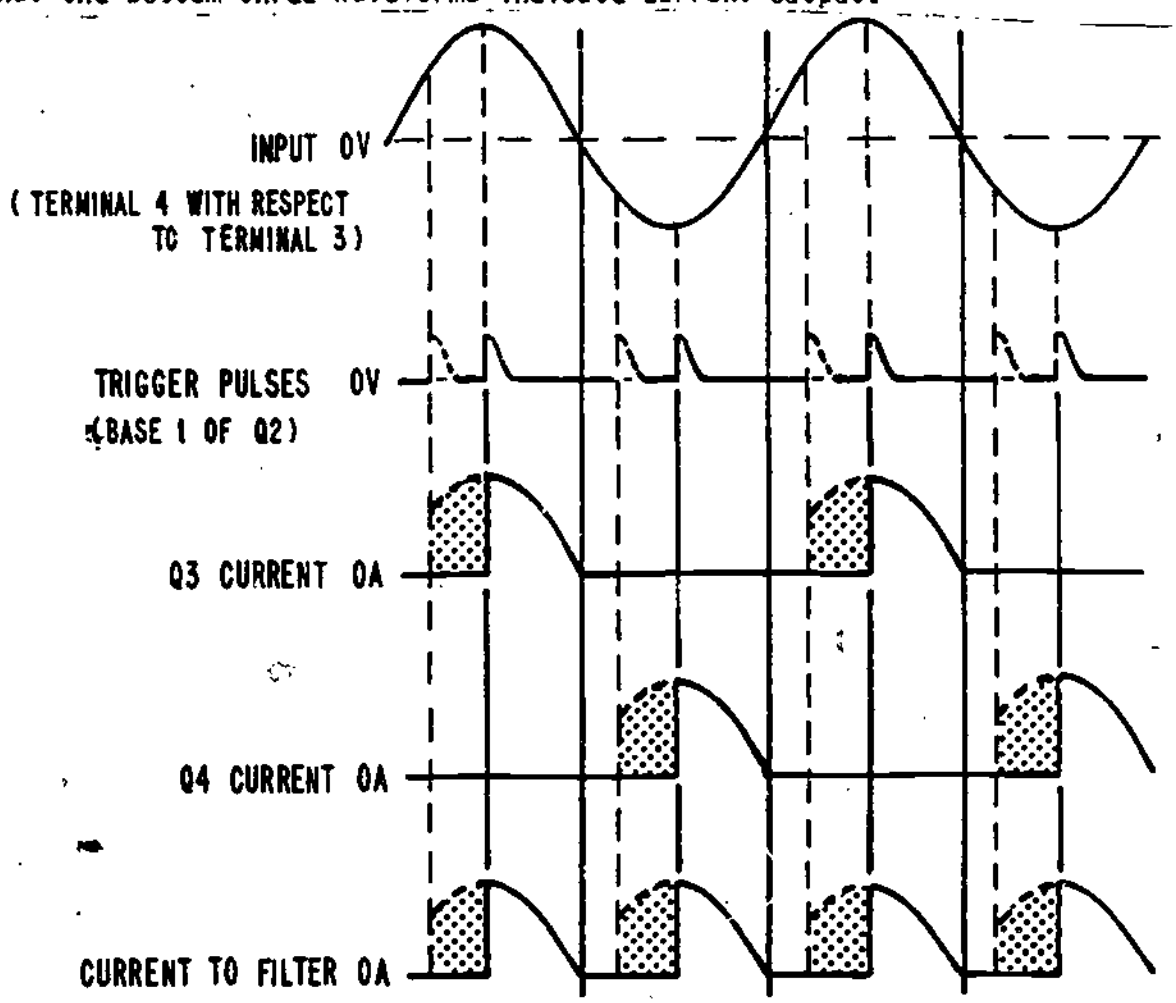


NORMAL OPERATING WAVEFORMS
INCREASED LOAD OR DECREASED INPUT VOLTAGE WAVEFORM.....

Figure 5

SCR REGULATED POWER SUPPLY WAVEFORMS