DOCUMENT RESUME

ED 181 776 HE 012 068

AUTHOR Barendsen, Robert D., Ed.
TITLE The 1978 National College Entrance Examination in the People's Republic of China.
INSTITUTION Office of Education (DHEW), Washington, D.C.
PUB DATE 79
NOTE 115p.; One map may not reproduce well
AVAILABLE FROM Superintendent of Documents, U.S. Government Printing Office, Washington, DC 20402 (Stock No. 017-080-02049-1, $4.00)

EDRS PRICE MF01/PC05 Plus Postage.
DESCRIPTORS *Academic Standards; Chemistry; *College Bound Students; *College Entrance Examinations; Comparative Analysis; English; Foreign Countries; Guidelines; Higher Education; History; Knowledge Level; Mathematics; Physics; Politics; Second Language Learning; *Standardized Tests; Study Guides; *Testing Programs; *Test Results; Translation
IDENTIFIERS *China

ABSTRACT

Materials concerning the 1978 national college entrance examination in the People's Republic of China are presented. This was the first nationally standardized test taken in China since the Cultural Revolution began in 1966. The examination contained tests in eight subjects: mathematics, physics, chemistry, politics, history, geography, Chinese language, and foreign language. This report includes English translations of the official review outline for the 1978 examination (essentially a syllabus designed to help students prepare for the examination) and the actual tests in six of the eight subjects (geography, Chinese language, and foreign language other than English are not included). Commentaries by American specialists on the material related to the various subjects assess the level of knowledge reflected in the available 1978 Chinese materials and, as feasible, compare it with the level of knowledge in that subject expected of prospective college entrants in the United States who have completed the usual college preparatory course in American secondary education. Commentators also compare the content of the 1978 outline with the relevant portion of the national college entrance examination outline used in China in 1959 to determine what changes may have come about in each of the eight subjects as a result of the Cultural Revolution and to provide information about academic standards since the Cultural Revolution. The scope of material covered by the examination and the preparation for and conduct of the examination are also summarized. The commentators are Michael Lindsay, Frederich W. Mote, Frank J. Swetz, John W. Layman, Marjorie Gardner, Chang-tu Hu, Clifton W. Pannell, and Timothy Light. (SW)

****
* Reproductions supplied by EDRS are the best that can be made *
* from the original document. *
****

The 1978
National College Entrance Examination
in the

PEOPLE'S REPUBLIC OF CHINA

ED181776

U.S. DEPARTMENT OF HEALTH, EDUCATION & WELFARE
NATIONAL INSTITUTE OF EDUCATION

THIS DOCUMENT HAS BEEN REPRODUCED EXACTLY AS RECEIVED FROM THE PERSON OR ORGANIZATION ORIGINATING IT. POINTS OF VIEW OR OPINIONS STATED DO NOT NECESSARILY REPRESENT OFFICIAL NATIONAL INSTITUTE OF EDUCATION POSITION OR POLICY

HE 012 068

OE PUBLICATION NO. 79-19138

The 1978 National College Entrance Examination in the PEOPLE'S REPUBLIC OF CHINA

Robert D. Barendsen, Editor
Specialist for Far Eastern Countries
Office of Education

With contributions by:

Michael Lindsay, *The American University*
Frederich W. Mote, *Princeton University*
Frank J. Swetz, *The Pennsylvania State University*
John W. Layman, *University of Maryland*
Marjorie Gardner, *University of Maryland*
Chang tu Hu, *Columbia University*
Clifton W. Pannell, *University of Georgia*
Timothy Light, *University of Arizona*

U.S. DEPARTMENT OF HEALTH, EDUCATION, AND WELFARE
Office of Education

The opinions expressed in this report do not necessarily reflect the position or policy of the Office of Education, and no official endorsement by the Office of Education should be inferred.

FOREWORD

This study represents a particularly important and timely contribution of the U.S. Office of Education's comparative education program in support of national interest priorities. It pulls together and evaluates basic materials concerning the 1978 national college entrance examination in the People's Republic of China. This was the first nationally standardized college entrance examination to take place in the world's most populous nation since the beginning of its Cultural Revolution in 1966. The educational implications of that sweeping movement, including the substitution of labor performance and political activism for demonstrated academic proficiency as the principal selective criteria for college admission, are well documented in an earlier USOE study by Dr. Robert D. Barendsen, *The Educational Revolution in China* (Washington: U.S. Government Printing Office, 1973).

The 1978 examination reflects the major shift in national policy that developed after Mao Tse-tung's death in 1976, when the new Chinese leadership reached a firm determination to modernize China during the remaining few decades of this century. To achieve this objective it was essential to accelerate development of a suitable supply of highly qualified manpower. A nationwide competitive college entrance examination was therefore reinstituted to identify the most able youth throughout the country. Those selected would be given advanced training to realize their individual potential in support of national development goals.

Almost 6 million candidates took the examination in July 1978. Of these, some 290,000 (about 5 percent) were selected on the basis of the results to begin training at the postsecondary level in the fall of 1978.

The 1978 examination contained tests in eight subjects: mathematics, physics, chemistry, politics, history, geography, Chinese language, and foreign language (choice of English, French, Spanish, Russian, German, Japanese, or Arabic). All candidates were tested in at least five of the eight subjects and many in six. Tests in three of the subjects---politics, mathematics, and Chinese language---were required of all candidates. Any candidate who had studied a foreign language was also required to take a test in his or her choice of one of the seven languages listed above.

This report includes English translations of the official review outline for the 1978 examination (essentially a syllabus designed to help students prepare for the examination) and the actual tests in six of the eight subjects. (Not included are the tests in geography and Chinese language, as well as those in the foreign languages other than English in the foreign language category.)

Commentaries by American specialists on the material related to the various subjects included in the examination are a special feature of this report. The basic task of each commentator was to assess the level of knowledge reflected in the available 1978 Chinese materials and, as feasible,

to compare it with the level of knowledge in that subject expected of prospective college entrants in the United States who have completed the usual college preparatory course in American secondary education.

It should be noted that the Chinese candidates taking the examination were mainly graduates of the senior secondary school in the Chinese educational system and thus most had received a total of 10 years of primary and secondary schooling rather than the 12 years that constitute the American pattern. However, as is always the case in meaningful comparisons of national systems, the single statistic of number of years of schooling is not a sufficient basis upon which to render a judgment of educational equivalence. Such additional variables as length of school day and year, nature and quality of instruction, and performance standards required are among those that should also be taken into account. The ultimate criterion for determining comparability should be the level of achievement reached at a given stage in the educational cycle---what a representative student presumably knows at that stage. Within the limits of available information, that is what the commentators tried to estimate for the juncture between secondary and higher education.

The commentators had another task of special interest to scholars. To the extent feasible, they also endeavored to compare the content of the 1978 outline with the relevant portion of the national college entrance examination outline used in China in 1959, a pre-Cultural Revolution year, to determine what changes may have come about in each of the eight subjects as a result of the Cultural Revolution and to shed some light on the frequently posed questions of whether, where, and/or to what extent academic standards may have declined in the period since the Cultural Revolution began. The evaluative commentaries are especially useful in helping clarify what is and is not known and in providing suitable warning and perspective concerning the limited inferences that can be drawn from such material as is available.

At this writing, the pages that follow represent the most useful collection of information currently available in English on the content of instruction to which Chinese students have been exposed at the precollegiate level during the past decade or so. The material also provides some interesting evidence on the inclusion of political orientation in some subjects. The section on foreign language study may be particularly helpful in communicating some sense of what might be expected of recently educated Chinese students in dealing with written English.

This report is being published at an auspicious time. Interest in Chinese education is at a new high. One result of the normalization of relations between the United States of America and the People's Republic of China that took effect on January 1, 1979, is the increasing number of Chinese scholars and students who are beginning to come to the United States for advanced study under the Agreement on Scientific, Scholarly, and Educational Exchange. By the end of June 1979, some 200 already had arrived. In addition, at least 175 more are expected to arrive by September 1.

With relatively few exceptions, the initial wave under the official exchange program represents a generation schooled before the Cultural Revolution. Most of these individuals are between 35 and 45 years of age and have completed their higher education in China. Virtually all hold important positions at a tenure-equivalent level in teaching or research in science or technology in universities or research institutes. During their study in the United States most of them are being placed in the category of visiting scholar.

Under the official intergovernmental exchange program, the Chinese Government has set an ambitious target of 500 to 700 scholars and students to be in U.S. higher education institutions during 1979-80. No details are yet available on plans for succeeding years. However, if a sizeable educational exchange program continues, which seems likely at this time, succeeding groups will probably include a larger proportion of students whose college preparatory work occurred during the period covered by this report.

In addition to those who arrive under the official exchange program, a growing number of younger Chinese are beginning to come to the United States for undergraduate and graduate study under private auspices. These students are usually sponsored by relatives living in the United States. By the end of June 1979, over 100 had already arrived. It is therefore anticipated that this report will be of immediate as well as longer range value to admissions officers and faculty members in American higher education in helping them understand the educational background of the contemporary generation of college students from China.

The Introduction is an important part of the report and deserves careful reading. It provides essential background information on the special significance of the 1978 examination, summarizes the scope of material covered by the examination, describes the preparation for and conduct of the examination itself, introduces the basic examination materials included in this publication, and explains the rationale and guidelines for the commentaries on the examination that make up the concluding section of the report.

The U.S. Office of Education is pleased to make this information and related perspectives conveniently available in English to a wide audience through this inexpensive publication. Commendation is due Dr. Barendsen for the general conception and effective execution of the completed project that you now have in hand.

Robert Leestma
Associate Commissioner
for Institutional Development
and International Education

July 1979

CONTENTS

8

PART I. INTRODUCTION

This report presents and evaluates materials pertaining to the 1978 national college entrance examination in the People's Republic of China. These materials consist of (1) an official review outline for the examination and (2) individual subject tests included in the exam. The outline and tests are evaluated by an ad hoc group of American subject-matter specialists who have been invited to review the materials, with each member of the group commenting upon that portion of the data that relates to his or her field of specialization.

The report has been undertaken in order to make available to the American educational community such insights as these materials provide concerning the academic knowledge required of current entrants into Chinese colleges and universities. An assessment of this kind is of great interest at any time to specialists in comparative education. At this particular time, however, it is potentially valuable to a broader audience because of the projected large-scale influx of students from the Chinese mainland into the United States beginning in 1979. This prospect creates a special need for information that can help American educators to understand the prior schooling experiences these students will bring with them, so that appropriate placement and programs may be arranged for them in American institutions.

The body of this report consists mainly of the reproduction of the Chinese data (presented in English translation) and the subject-by-subject commentaries on this data by the panel of specialists selected for the purpose. This Introduction provides some brief background information pointing up the special significance of this examination and setting forth some salient aspects of the preparation for, and conduct of, the examination itself. It also briefly characterizes the specific Chinese data available for analysis and discusses the guidelines under which the commentaries were prepared.

Special Importance of the 1978 Examination

At precisely 8 a.m. on the morning of July 20, 1978, nearly 6 million youths and young adults took their seats in thousands of testing centers set up throughout the People's Republic of China to begin a national unified college entrance examination designed to select the fall 1978 entering class in China's higher education institutions.

An examination of the particular type that faced these candidates on that mid-summer day had not been given in mainland China in at least 13 years. Comparable competitive nationwide tests had been used to select college students in the 1950's and early 1960's, but had been abandoned at the beginning of the "Great Proletarian Cultural Revolution" movement

in 1966 and replaced in 1970 by a selection system relying primarily on the recommendations of work groups and stressing labor performance and political activism rather than demonstrated academic proficiency.[1]

By 1977, however, when the new Chinese leadership that had emerged after the death of Mao Tse-tung in September 1976 was embarking on an intensive drive to modernize China by the end of the current century, this new system came to be viewed as having badly failed as a means of identifying and selecting for advanced training those individuals who had the capacity to lead a vast modernization effort. As the post-Mao government saw China's situation, the country was already lagging far behind the advanced nations in the level of its development, and unless it could catch up through a "crash" program in the next two and a half decades it would risk falling hopelessly off the pace and even endanger the very chances for its survival in its present form. The stakes in the modernization race were thus seen as being vitally high, and the winning of the race was viewed as depending to a large extent on the quantity and quality of human resources--especially skilled scientists and technicians, but also economists, industrial managers, and specialists in a variety of other fields as well--available to tackle the task. To ensure an adequate supply of such specialists, it was deemed imperative to begin immediately to identify the brightest and most talented of China's young people, and to provide them with the opportunity to develop their potential through advanced training at the higher education level.

To implement this approach, the Chinese Government in 1977 revived the system of nationwide competitive college entrance examinations, and the first such tests were given in December of that year. On the basis of these tests, taken by some 5.7 million candidates, about 278,000 students were selected to begin their college education in March 1978.

The July 1978 examination was thus actually the "second round" of the revived national competition system. It differed from the 1977 examination in one especially noteworthy respect. The December 1977 testing had been nationwide in scope but *decentralized* in its conduct, using test papers drawn up separately in each of China's Provinces. The 1978 examination, however, was *nationally standardized*, meaning that only one test paper was drawn up for each of the subjects on the examination, and that all candidates throughout China were confronted with exactly the same questions in each subject field.

---

[1] For a detailed account of the reasons for, and nature of, this change, see Robert D. Barendsen, *The Educational Revolution in China* (Washington: U.S. Government Printing Office, 1973).

This characteristic of the 1978 examination--its emergence as a single-text testing instrument used throughout the country--appreciably enhances its pedagogical significance and its importance as a topic meriting consideration in some detail. Indeed, it would probably be no exaggeration to say that analysis of the available data related to this examination may very well provide the outside world with the most revealing clues it can hope to obtain regarding the content of the instructional program in China's 10-year primary-secondary school system at a time when the products of that system are about to go abroad in sizeable numbers to continue their education.

Preparations for the Examination

In April 1978, about 3 months before the examination was scheduled to be given, the Ministry of Education in Peking announced the compilation of a "review outline" designed to assist candidates preparing to take the examination. The outline was drawn up under the supervision of a special committee established in the Ministry to oversee the examination process.

This outline, which was published in booklet form and presumably widely distributed within the country, is in effect a syllabus reflecting the scope of the material to be covered in each of the eight subjects (mathematics, physics, chemistry, politics, history, geography, Chinese language, and foreign language) in which tests were to be offered in the examination. From the booklet a candidate was able to discern the breadth and depth of material he or she could expect to be examined on in each subject field. No sample questions were explicitly offered in the outline, but many possible queries were indicated through the considerable detail in which the review guidelines were presented.

Throughout the late spring and early summer of 1978, as several million students prepared for the crucial examination, this booklet must have been one of the most avidly read publications in the nation. Visitors to China during the period reported seeing young people in noisy crowded places assiduously perusing materials of this kind.

During this same period, a panel of educators was drawing up in final form the examination that would be administered in July, and candidates were filing their formal applications to participate in the testing. There were two basic requirements establishing an individual's eligibility to take the examination: (1) Graduation from a senior secondary (called "senior middle" in China) school--i.e., successful completion of at least 9, or more commonly 10, years of primary-secondary schooling; and (2) an age of under 30. There were, however, several exceptions to this general rule. Applicants between 25 and 30 could qualify to take the exam even though they did not have a middle school diploma, providing they were adjudged to have attained an educational level equivalent to that of senior middle graduates. Also senior middle school graduates of 1966 and 1967 were specifically made eligible to participate, even though they might be slightly over 30 years old. Finally, students in senior

middle schools who had not yet graduated were al' 'ed to take the exam if they were recommended by their schools as being particularly outstanding academically, and if the recommendation was approved by the college recruitment authorities in their local jurisdictions.

Conduct of the Examination

The examination itself was held simultaneously at testing centers widely scattered throughout China during the 3-day period from July 20 through July 22. Each candidate took tests in at least five of the eight subjects offered, and many took six of the eight tests. All candidates were required to take the tests in three subjects--politics, Chinese language, and mathematics; in addition, those candidates desiring to specialize in college in scientific and technological fields took the tests in both physics and chemistry, and those intending to specialize in the social science and humanities fields took the tests in history and geography; finally, all candidates except those who had not studied a foreign language were required to take a test in their choice of one of seven languages (English, Russian, French, German, Japanese, Spanish, and Arabic).

The tests were given according to the following schedule:

July 20	- 8:00 a.m.:	Politics
	- 2:30 p.m.:	Physics, history
21	- 8:00 a.m.:	Mathematics
	- 2:30 p.m.:	Chemistry, geography
22	- 8:00 a.m.:	Chinese language
	- 2:30 p.m.:	Foreign language

Each of the tests except the one in Chinese language were designed to be completed in 2 hours (the Chinese language test was designed for 2½ hours), but candidates were allowed an additional half-hour to finish each test if they felt they needed this extra time. Thus each candidate was expected to spend a minimum of 10½ hours (12½ if he or she was taking a foreign language test) in the examination room within the 3-day period.

The tests consisted of questions of varying complexity. Each question was individually value-weighted, and the total possible score on each subject test was 100 points.

The overall scoring system for the examination as a whole yielded, for each candidate, a single-figure total score (e.g., 283, 347, 416, etc.). This score represented the aggregate total points the examinee amassed on five 100-point tests. For most candidates, the five tests on which the overall score was based were politics, Chinese language, and mathematics plus either physics and chemistry (for science/technology candidates) or history and geography (for liberal arts, social science, and humanities candidates). Thus for the great majority of examinees, the score

achieved on a foreign language test they might also have taken was not counted in the basic 500-point calculation, but was used "for reference purposes only" (a phrase whose precise meaning in this context was not clarified). For those candidates intending to specialize in the study of foreign language, however, the score on the foreign language test was counted in calculating their overall point total, and their score on the mathematics test was used only "for reference purposes."

Information on how many points an examinee had to achieve in order to be successful in the examination is not entirely clear. Apparently the "success" score varied, depending on the Province or municipality in which the candidate lived and took the exam. From the data available, it would appear that the "cut-off" score varied in different areas from as low as 280 or so to as high as perhaps 370. In general, it seems that in most areas, in order to gain admittance as a full-time resident student to one of the regular colleges or universities, a candidate had to gain a total of at least 300 points out of 500 (or 60 percent). Indications were that a total point score of 380 or more was likely to be needed to gain acceptance by a major university. Evidently, there was no minimum "passing" score on *individual* subject tests--i.e., if (for example) a total score of 350 points was needed to be successful, an examinee could score 70 points on each of three tests and 85 points on one test, and could still qualify with a score of only 55 points on the fifth test.

Only about 1 out of 20 candidates appears to have been successful in the 1978 examination. In the fall of that year, China's state-run colleges and universities enrolled some 290,000 new regular students, a figure which represents about 5 percent of the 5.8 to 5.9 million candidates who had taken the college entrance examination in July.

Specific Exam-Related Data Available for Analysis

Within several months following the July 1978 examination, a substantial body of material directly related to the content of that examination became accessible to the outside world. Included in this data are (1) the full text of the official "review outline" for the examination and (2) the texts of the actual tests in six of the subjects offered in the examination--politics, mathematics, physics, chemistry, history, and English language.[2]

The "review outline," in its original form in Chinese, is 41 pages long. It consists of a one-page introductory section, followed by 40 pages of material, organized in outline format, on the eight subject areas to be

---

[2] Despite broad-ranging inquiries by the editor of this report, the geography and Chinese language tests were not obtained. No attempt was made to acquire the tests in the other six foreign languages offered.

covered in the examination. The length of the sections on individual subjects varies from 1½ pages (for foreign language) to 7½ pages (for physics).

The content of the outline is very informative. The sections on mathematics, physics, and chemistry indicate the various subdivisions of these subjects included in the examination and the scope of the requirements under each subdivision. Since the topics are discussed in the universal language of the "exact science" subjects, the substance of these sections will be readily familiar to anyone knowledgeable in these areas.

The sections of the outline on the three social studies subjects (politics, history, and geography), on the other hand, reflect the particular way these subjects are treated in the contemporary Chinese cultural and political context. This particularization of content goes beyond the obvious emphasis on *Chinese* affairs--e.g., Chinese history and the geography of China. The section on politics, for instance, devotes considerable attention to Marxist theory, and the section on history (which covers world history as well as Chinese history) provides a thought-provoking--and perhaps somewhat disturbing--capsulized summary, in outline form, of the history of the modern world as it is seen from a Marxist-Leninist viewpoint.

Another noteworthy feature of the social studies sections of the outline is that they consist of two different types of statements. Most of the material in these sections serves merely to identify a topic or aspect of the subject that candidates should be prepared to discuss. But intermixed with these "neutral" statements are a sizeable number of statements that serve not only to alert the candidate to be prepared to discuss a certain topic, but also to indicate the direction or orientation expected to be followed in that discussion. For example, in quite a few instances the outline, in the course of listing a topic (such as a political or historical event), also suggests quite clearly and explicitly how that event should be characterized or interpreted. A related point is that the outline sections on politics and history--and even the section on geography--include several passages that seem designed to ensure that specific characterizations of certain foreign countries (especially the United States and the Soviet Union) and their international policies will be adhered to in answering questions.

The section of the outline devoted to foreign language studies is of special interest to Americans because it cites the requirements in English to illustrate the level of competence required in each foreign language offered. In so doing it provides useful insights into the degree of sophistication expected of Chinese students in handling written English.

The texts of the actual tests in the six subjects are all relatively short, as one would expect from the fact that each test was designed to be completed in 2 hours. In their original Chinese-language versions, the

total length of the six tests is only 16 pages; individual subject tests vary from one page (for politics) to five pages in length (for English).

The format of these six tests requires little general comment here, as the tests are comparable in design to subject examinations given elsewhere in the world. They include the customary variety of types of questions--multiple-choice, fill-in-the-blanks, essay-writing, problem-solving, etc.

The content of the tests, consisting of the actual questions posed, is of obvious significance in evaluating the level of competence expected of Chinese college entrants. Having access to this body of information enables one to "flesh out" the picture obtainable from a perusal of the review outline. Whereas the syllabus-type outline provides the best evidence of the full *breadth* of the material to be covered in the examination, specific test questions can offer more precise evidence concerning the *depth* in which the subject-matter must be mastered.

Full English translations of all of the above-mentioned Chinese data are reproduced in part II of this report. It is this body of material that constitutes the primary data base on which the subject-by-subject evaluative commentaries have been undertaken.

Guidelines for the Commentaries

Each of the eight subject-matter specialists whose comments make up part III of this report was given the portion of the 1978 "review outline" pertaining to his or her field of specialization and also the actual test in the relevant subject (where this latter information was available). The data was supplied in both the original Chinese-language version and in an English translation prepared by a United States Government translation agency.

Each commentator was asked to ensure the overall accuracy and terminological precision of the English translation of the 1978 materials in his subject area, and to comment on the substance of that material from the perspective of his specialized knowledge of the subject. More specifically, in preparing the evaluative part of his commentary each contributor was requested to assess the "level of knowledge" (level of sophistication) in the given subject area reflected in the 1978 Chinese materials, and to compare it, as feasible, with the level of knowledge in that subject area expected of students who have successfully completed a college-preparatory course in an American high school and are thereby prospective college entrants in the United States.

Although this assessment of the level of the 1978 Chinese materials in relation to American standards was the main task assigned to the commentators, they were also asked to add an ancillary comparative dimension to their comments. The background and rationale for this request lies in the oft-repeated statements in Chinese sources during 1977 and 1978 to the effect that academic standards in China's schools had declined in the period since the Cultural Revolution began in 1966. In order to ascertain if such a change would be reflected in a comparison of a current examination syllabus with one for a pre-Cultural Revolution year, each commentator was also given the relevant portion of the national college entrance examination outline used in China in 1959, and was asked to compare the treatment of the assigned subject in the 1978 outline with that of the same subject in the 1959 document.[3] In using the 1959 outline for this comparison, it was assumed that, since the first half of the 1960's was generally a relatively stable period in Chinese education marked by an emphasis on academic quality, standards in Chinese schools immediately prior to the Cultural Revolution were at least as high as they were in 1959.

It should be noted that all the participants in this project were fully aware from the outset of the obvious complexities involved in evaluating the 1978 Chinese materials. Not only does the discernment of the level of sophistication represented by these materials require difficult interpretative judgments, but the comparison of this level with prevailing American standards in itself also poses manifestly complex problems.[4]

Furthermore, it was recognized by all concerned in the project that the degree to which the various contributors could make a crosscultural evaluation of the data would vary considerably from one subject to another. In three subjects (mathematics, physics, and chemistry), where the subject matter is essentially free from "culture-based" differentiation and the subject is widely taught in American high schools, there is a potential

---

[3] The exam outline for 1959 was used for this purpose because documents of this kind for the years 1961 through 1965 were not available, whereas the 1959 outline was readily accessible in both the Chinese original and a full English translation. Since it is easily available elsewhere, the English translation of the 1959 document is not reproduced herein. Readers interested in perusing it may find the text in: American Consulate General, Hong Kong, *Current Background* No. 587 (Aug. 17, 1959).

[4] To minimize these latter problems, a special effort was made to select commentators on certain subjects (especially mathematics, physics, and chemistry, but also history and geography) who, by virtue of their professional activities and responsibilities, could bring to this task a substantial awareness of how these subjects are currently handled in the American high school.

opportunity for a really meaningful "level-assessment" of the Chinese data and, in addition, for rather direct binational comparisons. In the other subjects, where the substance and content of instruction under a given subject label in China differs so greatly from what would be taught under that label in an American high school, a level-assessment of the Chinese data becomes more tenuous and binational comparisons must be largely indirect and tentative.

Nevertheless, despite their limitations, assessments and comparisons such as are undertaken in the subject-by-subject commentaries in part III of this report not only are of scholarly value but also constitute an important element in one possible concrete approach to resolving a practical problem. According to present plans, several thousand students from the People's Republic of China are expected to come to the United States for college-level training during the next few years. They must be placed in appropriate programs in American institutions. In order to make relevant placement decisions on their behalf, American college officials must somehow acquire a basic understanding of the kind of instruction these Chinese students have been exposed to in their precollege school days, and particularly during their years in secondary ("middle") schools. In the absence of more refined techniques for achieving this understanding, the perusal of the Chinese documentary material reproduced in this report and the evaluative commentaries on that material by a panel of American subject-matter specialists may offer one of the best available means to attain the necessary perspectives.

PART II. TRANSLATIONS OF CHINESE MATERIALS

RELATED TO THE 1978 NATIONAL COLLEGE ENTRANCE EXAMINATION

1. REVIEW OUTLINE FOR THE EXAMINATION [1]

Explanation

To help examinees who will participate in the 1978 college entrance examination (especially employed workers and young people with broad knowledge) to review, we have compiled this review outline. The outline includes eight subjects: Politics, language, mathematics, physics, chemistry, history, geography, and foreign language.

In view of the fact that teaching materials used in the nation's middle schools are not uniform, that the courses of study offered in some areas are not complete, and that the academic standard of the students in various districts differs, when we compiled this outline we did so mainly on the basis of the actual teaching conditions and the materials used in the majority of districts at the present time. At the same time we also took into account the basic requirements of institutions of higher education regarding new entering students. When reviewing according to this outline, while emphasizing the establishment of a good foundation, the examinee should also focus his attention on consolidating the basic knowledge learned in the past and improving his ability to analyze and solve problems, and should not try to guess what questions will be asked, or cram, or memorize. Our basic viewpoint is that through review the examinee should improve on the foundation he already has.

Because this outline was compiled in haste, it is possible that it is incomplete in some respects, but it can still serve as reference material for teachers, tutors, and examinees.

The contents of this outline are not examination questions, but the scope of the topics covered will not go beyond this outline.

---

[1] *Review Outline for the 1978 National College Entrance Examination*, compiled by the Ministry of Education, People's Republic of China. The translation from the Chinese beginning immediately hereunder is based on the one in U.S. Joint Publications Research Service, *Translations on People's Republic of China No. 440* (July 11, 1978), pp. 1-35. "Commentator's notes" and material in square brackets were added by the respective subject commentator, identified in part III of this report.

Politics

Requires of the candidate an elementary understanding of the basic principles of Marxism-Leninism and Mao Tse-tung thought and a rudimentary ability to apply the standpoint, viewpoint, and method of Marxism to the analysis of practical problems and to criticism of the counterrevolutionary revisionist line of the "gang of four."*

General Knowledge of Dialectical Materialism

I. What is philosophy? What is Marxist philosophy?

II. Concerning dialectical materialism

The basic difference between materialism and idealism.

The two most prominent features of dialectical materialism.

The basic principles of dialectical materialism on the primacy of material things and the secondary nature of consciousness. Fostering of the good style of seeking truth from facts.

The dialectical relationship of the material and ideal. Respecting objective laws and fully developing man's objective activity.

Cite examples criticizing the idealism proclaimed by the "gang of four."

III. Concerning the epistemology of dialectical materialism

What is practice? What is knowledge? The dialectical relationship of practice and knowledge. The position of practice is the first and fundamental position of the ideal dialectical materialism.

The dialectical relationship of perceptual knowledge and rational knowledge.

The law of knowledge "practice, knowledge; more practice, more knowledge."

Characteristics of "left" and "right" opportunism in epistemology.

---

* Commentator's note: The "gang of four" are Chiang Ch'ing (Mao Tse-tung's wife), Chang Ch'un-ch'iao, Yao Wen-yuan, and Wang Hung-wen. They rose to power and prominence through the Cultural Revolution, which started in 1966, and remained influential until they were arrested in October 1976.

IV. Concerning materialist dialectics

Fundamental difference between materialist dialectics and metaphysics.

The law of opposites is a fundamental law of the universe.

What is an internal factor? What is an external factor? Use facts to explain the dialectical relationship of internal factors and external factors.

What is the universality of contradiction? What is the particularity of contradiction? The relationship of the universality of contradiction and the particularity of contradiction. The importance of concrete questions and concrete analysis.

What is principal contradiction? What is secondary contradiction? The significance of grasping contradiction. What is the principal contradiction aspect? What is the secondary contradiction aspect? Cite examples to explain the mutual transformation of the principal contradiction aspect and the secondary contradiction aspect under certain conditions.

What is the unity of contradiction? What is the struggle of contradiction? What is the relationship of the unity of contradiction and the struggle of contradiction?

Cite examples criticizing the nonsense of the metaphysics proclaimed by the "gang of four."

Brief History of Social Development

I. Some basic positions of historical materialism

Productive forces, productive relations, and their mutual relationship. Economic foundation, the superstructure, and their mutual relations. The basic contradictions of society are the basic cause of social development.

Class struggle is the motive force of the development of a class society.

The masses are the creators of history.

II. Primitive society

Labor created man.

The relationship of productive forces and productive relations in primitive society.

The development of productive forces and the emergence of private ownership; the appearance of class and state.

III. Slave society, feudal society, capitalist society

The special features and basic contradictions of productive relations in the slave system, feudal system, and capitalist system and their manifestations in class relations. The proletariat is the gravedigger of capitalism. Capitalism must perish, socialism must be victorious.

Fundamental characteristics of imperialism. Imperialism is the eve of socialist revolution.

IV. Socialist society and communist society

Basic features of socialist productive relations. "From each according to his ability, to each according to his work" is the distributive principle of socialism. Basic contradictions in socialist society. Class and class struggle in socialist society. Socialism is the eradication of class.

Human society must march towards communism.

General Knowledge of Scientific Socialism

I. The proletariat and its political party

The proletariat is the most progressive and promising class in history. The Chinese proletariat is the leading class of the revolution.

The historical mission of the proletariat.

The Communist Party is the vanguard and the battle headquarters of the proletariat.

The theoretical foundation guiding our thought is Marxism-Leninism.

To ever hold high and resolutely defend the great banner of Chairman Mao is a basic guarantee of our people uniting in struggle to carry out the proletarian revolution.

II. The proletariat's revolutionary allied army

The laboring peasants are the proletariat's most reliable allied army. The alliance of workers and peasants is the foundation of the dictatorship of the proletariat.

The united front of the revolution.

III. Proletarian revolution

The basic question of proletarian revolution is the question of state political power.

Violent revolution is a universal law of proletarian revolution.

IV. Dictatorship of the proletariat

The proletariat must smash the old state machinery.

The dictatorship of the proletariat is the continuation of class struggle in a new form. The dictatorship of the proletariat is a necessary stage in the history of all socialism.

The people are masters of the state.

The correct distinction between, and handling of, contradictions between the enemy and ourselves and internal contradictions among the people. Carrying out democracy with regard to the people, carrying out dictatorship with regard to the enemy. Carrying out the system of democratic centralism among the people.

The basic mission of the dictatorship of the proletariat.

V. Continuing revolution under the dictatorship of the proletariat

Chairman Mao's theories with regard to the continuing revolution under the dictatorship of the proletariat are an important development of Marxism-Leninism.

The transition from capitalism to communism is a relatively long historical stage.

The objective of continuing revolution. Criticize the "gang of four's" counterrevolutionary political program.

Continuous resolution of the contradictions between superstructures and economic base and the contradictions between productive relations and productive forces. Consolidating and developing the economic base of socialism and high speed development of society's productive forces.

The great significance of realizing the four great modernizations* of socialism with regard to consolidating socialism's political and economic system and protecting against a restoration of capitalism.

The historical mission of the dictatorship of the proletariat.

VI. Firmly maintain Marxism-Leninism and oppose revisionism

Revisionism is a bourgeois ideological tide.

How modern revisionism as represented by the Soviet revisionist rebel clique betrayed proletarian revolution and the dictatorship of the proletariat.

The important significance of opposing modern revisionism as represented by the Soviet revisionist rebel clique.

VII. Firmly maintain proletarian internationalism

The basis and significance of a tripartite division of the world.

The Soviet Union and the United States are the collective enemy of all the world's people.

The important significance of creating an international united front.

General Knowledge of the Chinese Revolution and Construction

I. The new democratic revolution by the Chinese Communist Party

The nature of, and important contradictions within, the society of old China. The nature, objective, motive power, and future of the Chinese revolution.

The birth of the Chinese Communist Party [1921] and its historical significance.

The danger of Ch'en Tu-hsiu's rightist opportunist line.

---

* Commentator's note: The "four great modernizations" that are the objective of the present PRC leadership are the modernizations of industry, agriculture, science and technology, and national defense.

The Nan-ch'ang Uprising. The Autumn Harvest Uprising. The Canton Uprising.* The creation of the Chingkangshan peasant revolutionary base and its enormous significance.

The danger of Wang Ming's "left" opportunist line. The great significance of the Tsunyi conference [1935].

The three great magic weapons of the new democratic revolution.

II. The socialist revolution and socialist construction led by the Chinese Communist Party

The basic conclusion of the new democratic revolution signaled by the establishment of the People's Republic of China and the beginning of the socialist revolution. Important domestic contradictions in the socialist period. Five great movements in the period of national economic recovery.

The content and essence of the general line during the Party's transitional period.

The basic direction of socialist revolution and socialist construction pointed out by Chairman Mao in his "On the Ten Great Relationships" [1956].

Chairman Mao's "On the Correct Handling of Contradictions Among the People" [1957] established the theoretical foundations for continuing revolution under the dictatorship of the proletariat. The need to carry out socialist revolution on the ideological front after the socialist revolution in the ownership system of productive resources is basically complete.

The Party's general line on socialist construction. The general direction for the development of the national economy.

The Party's basic line in the historical stage of socialism.

The nature of the Great Proletarian Cultural Revolution. The enormous significance of smashing the three bourgeois headquarters of Liu Shao-ch'i, Lin Piao, and the "gang of four." The basic principle of the "Three Do's and Three Don'ts."**

---

* Commentator's note: The three uprisings mentioned here were abortive Communist-led revolts against Kuomintang forces in 1927.

**Commentator's note: The "Three Do's and Three Don'ts" refers to a guideline instruction issued by Mao Tse-tung during the Cultural Revolution: Practice Marxism, not revisionism; unite, don't split; be open and above board, don't intrigue and conspire.

The central question of our Party's struggle with the "gang of four's" anti-Party clique. The extreme rightist essence of the "gang of four's" counterrevolutionary revisionist line and its manifestations. The characteristics of the eleventh line struggle within the Party in theory.

The Party's "Eleventh Congress" [1977] line. The general mission of China's socialist revolution and construction in the new period.

The guiding thought of the new Constitution passed by the Fifth National People's Congress [1978].

Contemporary Politics

The important international and domestic political events of the past year.

Language [Chinese]

When reviewing language lessons, the examinee should keep an eye on improving his reading and writing ability. So that in the short period before the examinations the examinee can have a certain degree of improvement, we propose some specific demands with regard to reading and writing ability. On the basis of these requirements, the student should select from the local district language materials a certain number of lessons as the central focus of his review and also should use those lessons as models for practicing his writing. When choosing lessons, the examinee should pay attention to [the following points:] (1) including each kind of commonly read text; (2) examples from literary Chinese should occupy a suitable proportion [of the whole].

Reading

Require that the examinee when reading colloquial style writings:

1. Be able to understand with accuracy the meaning of commonly used terms and expressions.

2. Be able to see the basic structure of comparatively long and structurally complex sentences and understand correctly the meaning of the sentence.

3. Be able to understand the organization and sequence of an essay and the logical connections between each part.

4. Be able to determine the central thought (i.e., topic) of an essay.

5. Be able to perceive the special qualities in the writing style of an essay.

6. Be able in an important work to connect the temporal background of the essay and the writer's life and thought to the understanding of its thought content and social significance.

With regard to literary Chinese the specific requirements are:

1. To have an elementary command of the most important basic sentence forms in the old literary Chinese, especially those that are different from the contemporary language.

2. Understand the functions of the most commonly used literary particles and know what particles in the contemporary language are the same as or close to these literary particles.

3. Understand the meaning of the most commonly used literary words and phrases.

4. Understand the temporal background of a work and the author's life and thought so as to be able to distinguish the work's positive significance and negative factors.

Writing

Require that the examinee be able to use his own words to relatively correctly describe a thing, record an event, explain something, and express feelings. Specifically:

1. Regardless of what is written, it should have substance and the facts should be correct. This is an important issue having relevance for literary style. We should oppose empty words and lies and eradicate the pernicious influence of the "gang of four's" eight-legged essay.

2. The central thought of the essay should be clear and should have positive significance.

3. One should learn to write relatively accurately. Whether describing a thing, narrating an event, or explaining a principle, one should strive to reflect objective practice accurately.

4. Writing should be clear and lucid. One should know how to revise, know what should and should not be written, what should be taken as the central point to be set forth in detail, and what need only be stated briefly. Pay attention to the order of the writing, what should be said first and what said last, what should be in one place and what should be split up. Everything should be arranged suitably. One should learn appropriate paragraphing, for the division of writing into paragraphs reflects the sequence in exposition.

5. Be able to select appropriate terms to express one's thought and not pile up verbiage or fabricate terms. Sentence structure should be grammatical, use of particles appropriate, and language faults kept to a minimum. Pay attention to the way characters should be written, keeping erroneously written characters to a minimum. Pay attention to correct use of punctuation marks.

Mathematics

This outline is divided into three parts: Algebra, geometry, and trigonometry. When reviewing, one should pay attention to the interrelationship of the knowledge in the various sections and their combined applications. Especially emphasize [in your studies] the fostering of basic ability, the learning of basic knowledge, and the cultivation of a facility for logical thought. In view of the current actual situation regarding mathematics in various areas of the country, we have not, for the time being, included [in the scope of the outline] inverse trigonometric functions, complex numbers, permutations and combinations, parametric equations, and limits.

Algebra

1. Real Numbers

   1. Understand the concept of rational number; have an elementary understanding of irrational number and the classification of real numbers.

   2. Correctly understand the concept of absolute value and know how to compare the magnitude of rational numbers and be able to express rational numbers on a number line.

   3. Have a command of operations with rational numbers and accurately perform the four operations with whole numbers, fractions, decimals, and positive and negative numbers.

2. Polynomial and rational expressions

   1. Accurately combine similar terms and carry out addition and subtraction on polynomials.

   2. Be familiar with operations involving powers and be able to multiply monomials and polynomials.

   3. Remember and apply the following multiplication formulas:

      $$(a \pm b)^2 = a^2 \pm 2ab + b^2$$

      $$(a + b)(a - b) = a^2 - b^2$$

      $$(a \pm b)(a^2 \pm ab + b^2) = a^3 \pm b^3$$

   4. Be able to simplify rational expressions and combine terms by the use of a common denominator.

   5. Accurately carry out the four operations with rational expressions.

3. Square root

   1. Understand the definition of the square root of a positive number and be able to compute square roots.

   2. Have a command of the properties of square roots and be able to use them in simplifying expressions involving square roots and rationalizing denominators.

   3. Be able to accurately perform operations on expressions involving square roots.

4. Factoring

   Have a good command of the following methods of factoring: By factoring common terms, by using special formulas, and by cross multiplying. Also know how to regroup terms in order to factor.

5. Equations

   1. Understand the related concepts of linear equations in one variable, quadratic equations in one variable, and linear equations in two variables.

   2. Be able to solve linear equations in one variable.

   3. Be able to apply methods of elimination (by substitution, by addition and subtraction) to solve systems of first degree equations in two variables. Also be able to solve systems of first degree equations in three variables.

   4. Skillfully solve quadratic equations by using the quadratic formula and by factorization. Also know the method of completing squares.

   5. Have an understanding of the discriminant of quadratic equations in one variable. Know the relationship between roots and coefficients.

   6. Know how to solve equations involving rational expressions by reducing them to first degree equations in one variable or quadratic equations in one variable.

   7. Know how to solve applied problems related to the above equations or systems of equations.

6. Inequalities

   Understand the nature of inequality and [be able to] solve first degree inequalities in one variable.

7. Exponents and logarithms

   1. Know the definition of positive exponents, zero exponents, fractional exponents, and negative exponents and be able to carry out operations using exponents.

   2. Know the definition, the properties, and rules of logarithms. Also [be able] to use common logarithms in solving related problems.

   3. Understand the formula for changing bases of logarithms.

8. Functions and their graphing

   1. Understand concepts related to functions and be able to find the domain of a simple function.

   2. Be familiar with the following functions' nature and graphing: Direct proportionality function; inverse proportionality function; first degree functions; second degree functions; exponential functions and logarithmic functions.

9. Progressions

   Understand the formulas for the general term of an arithmetic progression and a geometric progression and the formula for the sum of the first n terms [of the progressions].

Geometry

1. Basic knowledge of plane geometry

   1. Understand the basic concepts of line segment, ray, straight line, intersecting lines, angles, and systems of angular measurement.

   2. Understand the concept and nature of parallel lines and the theorems concerning parallelism.

2. Triangles

   1. Understand [the properties of the] interior angles of a triangle and the nature of external angles.

   2. Understand the theorem that proves the congruence of triangles and know how to construct a triangle with known properties.

   3. Know the theorem that proves the congruence of right-angled triangles and the Pythagorean Theorem.

4. [Understand] the nature of an isosceles triangle and the theorems involving isosceles triangles.

5. Know the nature of the perpendicular bisector of a line segment and the bisector of an angle and be able to use a ruler and compass to construct angle bisectors, medians, and altitudes of a triangle.

6. Know the theorem on parallel lines and proportional segments and the properties and theorems related to proportion.

7. Know the nature of similar triangles and the theorems for determining similarity.

3. Quadrilaterals

1. Understand the concept and properties of a parallelogram and the theorems involving them, and the basic properties of special parallelograms.

2. Understand and use the concept and nature of the trapezoid.

3. Be able to calculate the area of a triangle, a parallelogram, and a trapezoid.

4. Circles

1. Be able to construct a circle through three given points.

2. Understand the concept of measuring angles in degrees and in radians and the relationship between the two [systems].

3. Understand the relationship of central angle, diameter, and radius.

4. Understand the properties of chord, arc, diameter, central angle, and inscribed angle.

5. [By construction] be able to divide the circumference of a circle into four, five, and six equal parts.

6. Understand the nature and determination of a tangent and the theorem on the length of a tangent [drawn from a given point outside of the circle] and know how to construct a tangent to a circle from a point outside of the circle.

7. Understand the positional relationship of two circles.

8. Understand the length of an arc and the formula for calculating the area of a sector and a segment.

5. Solid Geometry

1. Understand the positional relationship in space of two straight lines, a straight line and a plane, and a plane and a plane.

2. Be able to use the appropriate formulas to find the surface area and volume of a cylinder, a cone, a frustum, and a sphere.

6. Plane analytic geometry

1. Understand the relationship of a point on a plane and coordinates.

2. Understand the formula for the distance between two points and the formula for locating the midpoint [of a line segment].

3. Understand the correspondence relationship between curves and their equations.

4. Correctly understand the concepts of the angle of inclination and slope of a straight line.

5. Understand the various formulas for straight lines and the geometrical significance of their coefficients and constants.

6. Understand the use of the formula for slope of a straight line in determining parallelism and perpendicularity [between lines].

7. Understand the definition and standard equations of circles and parabolas and their shapes.

8. Understand the definition, standard equations, and shape of ellipses and hyperbolas.

Trigonometry

1. Trigonometric functions of an acute angle

1. Understand the definition of the trigonometric functions of an acute angle and the value of the trigonometric functions of special angles.*

2. Know how to solve a right angle triangle and its application.

---

* Commentator's note: Other available Chinese math materials indicate that the "special angles" referred to here are the following: 0, $\frac{\pi}{6}$, $\frac{\pi}{4}$, $\frac{\pi}{3}$, $\frac{\pi}{2}$, π, $\frac{3\pi}{2}$, and 2π radians.

2. Trigonometric functions of any angle

   1. Understand the definition of the trigonometric functions of any angle and their reduction formulas.

   2. Understand the basic nature of sine and cosine and their graphs. Understand the basic nature of tangent and its graph.

   3. Know the law of sines and the law of cosines and be able to use them to solve problems.

3. Trigonometric formulas

   1. Understand the relationship between the trigonometric functions of the same angle and the relationship between trigonometric functions of complementary angles.

   2. Understand the formulas involving trigonometric functions of the sum of two angles, the difference of two angles, multiples of an angle and half angles.

Physics

Concerning the contents of this outline, the examinee should pay attention to the following points:

1. Understand the conditions of production and process of change in physical phenomena.

2. Understand the main purpose and correct use of relevant instruments in physics experiments.

3. Emphasize understanding of the concepts of physics; be able to correctly apply units of physical measurement.

4. With regard to physics formulas, understand their significance, be clear about the scope and conditions of their use, and be able to handle with ease their written expressions and mathematical calculations.

5. Understand the interrelationship of the material in the various sections [below] and be able to use it systematically.

Mechanics

I. Force

1. Understand the concept of force and force vectors (3 vector and graphic representation); have a command of units of force and the conversion relationship.

2. Understand the concepts of gravity and center of gravity; have a command of the definition of specific gravity and its units.

3. Understand the concept of elastic force; understand Hooke's Law ($F = K\Delta\ell$) and its use; know how to use the spring balance.

4. Understand the concepts of static friction, sliding friction, and rolling friction and be able to calculate the force of rolling friction.

II. Equilibrium of matter

1. Understand the concepts of resultant force and component force; understand the law of the parallelogram of force and be able to calculate resultant force and component force.

2. Understand the concept of equilibrium of force and the condition of local equilibrium of force.

3. Correctly understand the concept of moment of force; understand the conditions of equilibrium of matter with a fixed axis.

4. Understand the characteristics and use of the simple machines: lever, wheel and axle, fixed pulley, and movable pulley.

III. Kinematics

1. Understand the relativity of motion and rest.

2. Understand the characteristics of uniform linear motion and the concept of velocity and know the units of velocity.

3. Understand the concepts of average velocity and instantaneous velocity; be able to use the formula for average velocity $\bar{v} = \frac{s}{t}$.

4. Correctly understand the concept of acceleration, know the units of acceleration; know the characteristics of variable linear motion and the use of the formula.

5. Understand the concept of acceleration of gravity and know how to use the formulas for movement of a free falling body and for the motion of a body thrown upwards.

IV. Kinetics

1. Understand the concepts of Newton's First Law and inertia; be able to explain simple inertia.

2. Understand the concept of mass and its units, understand the relationships and differences of mass and weight, and know how to use scales to measure the weight of a body.

3. Know Newton's Second Law and its applications; understand the system of meter/kilogram/second and the system of centimeter/gram/second.

4. Correctly understand and be able to use Newton's Third Law and be able to analyze the active force and reactive force between bodies.

5. Be able correctly and skillfully to analyze the situation of an object subjected to force and to draw a diagram of an object subjected to force; know the method for solving a simple isolated body.

6. Understand the significance of the concept and the formula for momentum $F = \frac{mv-mv_0}{t}$; have a skillful command of the law of conservation of momentum and understand recoil and its use.

V. Work and energy

1. Understand the concept of work; know the use of the formula $A = FS\cos\alpha$ and the units of physical measure in the formula.

2. Understand the concept of power; know the calculation for power and its units.

3. Understand the concepts of energy, kinetic energy, and gravitational potential energy and have a skillful command of the uses of the formula for kinetic energy and gravitational potential energy.

4. Have a skillful command of transformation of mechanical energy and the law of conservation and the conditions of their application.

5. Know the significance for physics of efficiency of machines and methods of calculation.

6. Understand the relationships and differences of work and energy. Have a skillful command of the principle of function: $A_m - A_R = (\frac{1}{2}mv_2^2 - \frac{1}{2}mv_1^2) + (mgh_2 - mgh_1)$.

VI. Curvilinear motion--universal gravitation

1. Understand the conditions for an object to be in curvilinear motion.

2. Understand the synthesis and decomposition of velocity; have a command of the characteristics of the motion of a body thrown levelly and the law of motion.

3. Understand the concepts of uniform circular motion, angular velocity, and linear velocity and know the use of the formulas: $\omega = \frac{\phi}{t} = 2\pi n$ and $v = \omega R = 2\pi Rn$.

4. Understand the meaning of centripetal acceleration and centripetal force and know how to use the formulas: $a = \frac{v^2}{R} = \omega^2 R$, $F = \frac{mv^2}{R} = m\omega^2 R$. Understand the principle of centrifugal machines (centrifugal pump and centrifugal governor).

5. Know the law of universal gravitation; understand the reasons for changes in weight of an object on the earth's surface.

6. Know how to calculate primary astronautical speed and understand the meaning of secondary and tertiary astronautical speed.

VII. Oscillation and waves

1. Understand the concept of oscillation and have a command of the significance for physics of the concepts of oscillation amplitude, period, and frequency.

2. Understand the characteristics of simple harmonic oscillation and know how to use the formula for oscillation of a simple pendulum ($T = 2\pi\sqrt{\frac{\ell}{g}}$); be able to use a pendulum to determine acceleration of gravity.

3. Understand the phenomenon of resonance.

4. Understand the concept of waves; know the significance for physics of the concepts of wave length, wave velocity, and frequency and the relationship between them; understand the characteristics of transverse waves and longitudinal waves.

VIII. Fluid statics

1. Understand the concept of fluid pressure, know the physical significance and use of the formula P = hd, and know the units of pressure.

2. Understand Pascal's law (the law that pressure is distributed within a fluid); understand the operational principle of a hydraulic press.

3. Understand the concept of buoyancy; know Archimedes' principle and its use. Understand the principle of the hydrometer.

4. Understand the concept of atmospheric pressure; understand Torricelli's experiment; know the numerical value of standard atmospheric pressure.

Heat

I. Heat and heat expansion

1. Understand the concept of temperature; know the relationship between Celsius scale and absolute scale.

2. Understand the concept of heat and know the units of heat.

3. Understand the concept of combustion and value of fuels.

4. Understand specific heat and its units; have a skillful command of the formula $Q = cm(t_2 - t_1)$ and the use of the heat equilibrium equation.

5. Understand the phenomenon of a body's expansion when heated and contraction when cooled; know the significance and use of the formula $L = L_0(1 + \alpha t)$.

II. Change of states

1. Understand the concepts of fusion, solidification, melting point, and heat of fusion and know how to use the formula $Q = \lambda m$.

2. Understand the concepts of evaporation, boiling, boiling point, heat of vaporization, and liquification and know how to use the formula $Q = Lm$

III. Energy exchange and the law of conservation

1. Understand the significance and use of the mechanical equivalence of heat $J = 4.18$ joules/calorie (or 427 kilogram-meters/kilocalorie).

2. Understand the exchange of energy and the law of conservation of energy.

3. Understand the operational principle of the internal combustion engine and the efficiency of heat engines.

IV. The law of gases and the gas phase equation

1. Have a command of the law of transformation of equal temperature and equal pressure of a gas (Boyle-Mariotte's law, Gay-Lussac's law).

2. Know how to use skillfully the equation of an ideal gas state:
$$\frac{P_1V_1}{T_1} = \frac{P_2V_2}{T_2}$$

Electricity

I. Electrical field

1. Understand the concepts of positive charge and negative charge, conductors, and insulators.

2. Know the use of Coulomb's Law in a vacuum and units of voltage.

3. Understand the basic concept of electrical field and understand the significance of intensity of an electrical field and know the definition of intensity of an electrical field ($E = \frac{F}{q}$) and its units.

4. Understand the significance of potential and know the definition of potential ($U = \frac{W}{q}$) and its units.

5. Understand difference of electrical potential (voltage) and know how to use the formula $A = q(U_a - U_b) = qU_{ab}$.

6. Understand the concepts of electric lines of force and electrical field of uniform intensity. Know the relationship of the difference of electrical potential in an electric field of uniform intensity and the intensity of an electrical field ($V = Ed$).

7. Understand the concept of the charge capacity of a condenser; know the definition of capacitance ($C = \frac{Q}{V}$) and its units; understand what factors are related to the capacitance of parallel-plate condensers.

II. Direct current

1. Understand the conditions which produce direct current; know the definition of intensity of a direct current and its units.

2. Know the ways to use an ammeter and voltmeter.

3. Understand the concept of resistance and know the use of the units of resistance and the law of resistance $R = \rho\frac{L}{S}$ and the ways to use a sliding line rheostat.

4. Have a skillful command of the use of a parallel circuit Ohm's Law.

5. Have a skillful command of the characteristics of series circuits and parallel circuits and the use of their formulas; know the calculation of a simple compound circuit.

6. Understand the significance of electricity and electric power. Know the formulas for electricity and electric power.

7. Understand the heat effect of electric current; know how to use Joule-Lenz's law.

8. Understand the concept of electromotive force of an electrical source and how to apply Ohm's law to a complete circuit.

9. Understand the influence of resistance in an electric source on the voltage at the end of the circuit and know the characteristics of variation in the end voltage in a circuit from resistance from outside the circuit.

10. Know how to calculate the electromotive force and internal resistance of n batteries hooked up in series and in parallel.

11. Understand the concepts of partial circuit and partial voltage and know the methods and calculations for broad measurements with the ammeter and voltmeter.

III. Magnetic field

1. Understand the concepts of interaction of a magnetic body and magnetic poles, magnetic field, and magnetic lines of force.

2. Understand the magnetic field that surrounds an electric current and know the law of the right-hand screw.

3. Understand the function of magnetic field with regard to a wire carrying an electric current, understand the concept of the intensity of induction in a magnetic field, and know the units of intensity of induction in a magnetic field.

4. Understand the concept of magnetic flux and its units.

5. Know the application of formulas for the activity of an electric current in a magnetic field and know how to use the left-hand principle.

6. Understand the rotational phenomenon of an electrified coil in a magnetic field and the simple principle of electromagnetic instruments.

IV. Electromagnetic induction

1. Understand the phonomenon of electromagnetic induction; know the conditions which produce or induce an electric current. Know Lenz's law and the right-hand principle.

2. Understand the concept of an induced electromotive force; know Faraday's law of electromagnetic induction ($\varepsilon = n\frac{\Delta\phi}{\Delta t}$) and the use of the formula $\varepsilon = Blv\sin\alpha$ (in this formula ε = volts, B = Webers/meter^2, L = meters, and v = meters/second).

3. Understand the phenomenon of self-induction.

4. Understand the principle of the alternating current electric motor and the characteristics of alternating current; know the concepts of period, frequency, highest value, and effective value.

5. Understand the principle and function of the transformer and know the formulas of a transformer $\frac{V_1}{V_2} = \frac{n_1}{n_2}$ and $\frac{I_1}{I_2} = \frac{n_1}{n_2}$.

Optics

1. Know the characteristics and use of the law of reflection and mirror image.

2. Know the law of refraction and the use of the formula for a lens image $\frac{1}{u} + \frac{1}{v} = \frac{1}{f}$; be able to draw a diagram of the rays of light from a convex lens; be able to determine whether the image is virtual or real, right side up or upside down, and larger or smaller.

3. Understand the chromatic dispersion of light through a prism.

Nuclear physics

1. Understand the composition of the nucleus.

2. Understand natural radiation and artificial changes.

3. Understand the concepts of nuclear fission and fusion and the use of atomic energy.

Chemistry

Requirements:

1. Correct understanding and use of the basic concepts and theories of chemistry.

2. Skillful command of basic calculations of chemistry.

3. Familiarity with the nature, manufacture and applications of some common elements and compounds.

4. Elementary command of basic operation of a chemisty laboratory.

5. General understanding of basic knowledge of organic chemistry.

I. Basic concepts

Chemical change, physical change.

Pure substances, mixture.

Molecules, atoms, elements, simple substances, compounds.

Atomic weight and molecular weight.

Chemical symbols for common elements and their important combining valences and their radicals. Molecular formulas.

The law of conservation of matter. The balancing, writing, and significance of chemical equations.

Gram molecule, gram atom, gram equivalent. The volume of a gram molecule of a gas.

Solutions, solute, and solvent. Dissolution and crystallization.

Saturated solution, non-saturated solution. Solubility.

Acid, base, salt (true salt, acid salt), and oxide (acid oxide, basic oxide, amphoteric oxide).

Neutral reaction, indicator (litmus, phenolphthalein), pH value.

Four kinds of chemical reaction (combination, decomposition, displacement, double decomposition).

The essence of oxidation reduction reactions, oxidizer, reducer, the direction and number of electron transfer.

Catalyst, catalysis.

II. Basic theory

1. Atomic structure and molecular formation:

   Composition of atoms.

   Relationship of atomic number, nuclear charge, proton number, and number of electrons outside the nucleus.

   The law of distribution of electrons outside the nucleus. Use the chart of atomic structure to show the atomic structure and electron structure of the main group of elements before number 36. The characteristics of lazy elements' atomic structure.

   The concept and types of chemical bond (electron bond and covalent bond). Use the electron to demonstrate the structure of a molecule. Polar molecules and non-polar molecules.

2. Periodic law and periodic table of elements:

   Periodic law. Use the theory of atomic structure to explain the elements from 1 to 20 and the nature and law of variation of their compounds (maximum value oxides and their hydroxides; acidity and alkalinity; the stability of gas phase hydrides and valence of elements).

   The structure of long type period table; short period and long period, main group and subgroup.

   Discuss the position of an element in the periodic table on the basis of atomic structure:

   Why, within the same period, following the increase of the number of the nuclear charge, the metallicity of each element weakens and the non-metallicity grows stronger.

   Why, within the same group, with the increase of the nuclear charge the metallicity strengthens and the non-metallicity weakens.

   Explain, on the basis of the arrangement and number of electrons outside the nucleus of an element, the properties of the element and its position by group in the periodic table.

3. Ionization theory:

   Electrolytes and non-electrolytes, strong electrolytes and weak electrolytes. The electrolytic process of strong and weak electrolytes and the electrolytic equation. Use the concept of electrolytes to explain acids, bases, and salts.

The electrolytic reaction of acids, bases, and salts in solution and the condition tending toward completion of the electrolytic reaction; [be able to] write out the electrolytic equation.

Summarize illustrative command of salts (salts made up of strong acid-weak base, strong base-weak acid, and strong acid-strong base); the law of hydrolysis and the electron equation of hydrolysis.

The principle of electrolytic reaction of an aqueous solution of table salt. The distinction between ionization and electrolysis.

4. Chemical balance:

Chemical balance. The shift of chemical balance. Conditions that influence the shift of chemical balance (temperature, pressure, and concentration).

Be able to apply the speed of a chemical reaction and the principle of chemical balance to choose the favorable conditions for synthesizing ammonia.

III. Basic calculations

1. Use molecular formulas to calculate molecular weight and the weight percentage of an element in a compound.

2. Calculate the concentration of a solution: Concentration by weight, concentration by gram molecules, and concentration by equivalent weight; be able to convert among them.

3. Use chemical equations to calculate the weight of a substance and the volume of a gaseous substance under standard conditions (including the use of the concepts of gram atom, gram molecule, and gram molecular volume).

4. Calculations relevant to industrial production (the actual weights of various raw materials and products).

IV. Basic empirical skills

1. Know the commonly used equipment of chemical testing and its important applications: Test tube, flask, glass rod, evaporation dish, funnel, alcohol lamp, graduate, thermometer, medicine spoon, tray scales, asbestos mesh, metal stand, metal ring, metal tweezers.

2. Basic operation of a chemical experiment:

Laboratory preparation and differentiation of H_2, O_2, Cl_2, and CO_2; dilution of concentrated sulfuric acid.

Preparation of a solution with a specific concentration by weight.

Purification of table salt (including medicinal use, solution, heating, filtering, evaporation, crystallization).

3. Differentiation of several types of ions: Cl^-, SO_3^{2-}, SO_4^{2-}, NH_4^+, Fe^{3+}.

V. Basic knowledge of elements and compounds

1. Nature and basic uses of oxygen, hydrogen, and chlorine.

2. The nature and basic uses of hydrochloric acid, sulfuric acid, and nitric acid.

3. Industrial preparation, nature, and uses of caustic soda.

4. Important nature and uses of sodium carbonate.

5. Acids, bases, and salts and the mutual reactions of oxides (including metals and non-metals) and the succession of metal activity.

6. Chemical fertilizers (nitrogen fertilizer, phosphate fertilizer, potassium fertilizer), their constituents, and properties.

7. The nature of aluminum and iron, the basic principles of refining iron and aluminum, the two natures of aluminum oxide.

VI. Basic knowledge of organic chemistry

1. The distinction between organic and inorganic compounds. The nomenclature of simple organic compounds.

2. Hydrocarbons:

The concepts of hydrocarbon, hydrocarbon radical, homologs, and isomers; the composition, structure (including structural reduction) of alkyl hydrides, olefines, alkyne hydrides, and aromatic hydrocarbons and their collective and individual characteristics in chemical nature.

The important characteristics, use, and laboratory preparation of methyl hydride, ethylene, acetylene and the characteristics and use of benzene.

3. Derivatives of hydrocarbons:

The structure, nature, and important uses of ethyl alcohol, formaldehyde, acetic acid, ethyl acetate, and phenol.

4: The composition, fractional distillation, and products of petroleum.

History

When reviewing history lessons, the examinee is expected to have a command of basic history knowledge, understand the important events and historical personalities of Chinese and world history, understand the basic pattern of historical development, and be able to begin to use the basic viewpoint of historical materialism to observe and analyze problems.

Ancient Chinese History

I. Primitive society

1. "Peking Man."

2. The public ownership system of the clan commune.

3. The gradual disintegration of the clan commune system.

II. Slaveowning society

1. The earliest slaveowning state: Hsia

2. The development of the Shang dynasty slaveowning system. Bronze vessels. Oracle bone script.

3. The enfeoffment system and well-field system of Western Chou.

4. Gradual disintegration of the slaveowning system in the Spring and Autumn period: the ruin of the well-field system. Slave uprisings.

III. Feudal society

1. The Warring States, Ch'in and Han periods.

"The Seven Powers of the Warring States." The Shang Yang reform. "A hundred schools contend." The great poet Ch'u Yuan. The establishment of a unified, multi-ethnic feudal state. Consolidation measures of Ch'in-Shih-huang-ti.

The Great Wall.

The first peasant uprising led by Ch'en Sheng and Wu Kuang.

Social and economic development in Western Han.

The wars against the Huns in the time of Emperor Wu of Han. Chang Ch'ien's missions to the Western Regions. "Silk Road."

The Green Forest, Red Eyebrows Uprising.

The Yellow Turban Uprising.

Paper making. Ssu-ma Ch'ien's "Historical Records." Chang Heng's seismograph.

2. Three Kingdoms, the Two Chins, Northern and Southern Dynasties, Sui and T'ang periods.

Ts'ao Ts'ao unifies the North. Division under the Three Kingdoms. The connection between Wu and Taiwan.

The Battle of the Fei River.

Tsu Chung-chih's value of π.

The digging of the Grand Canal.

The peasant uprisings at the end of Sui.

The equal land system and system of taxation in grain, textiles, and corvée of the T'ang dynasty.

Songtsangampo and Princess Wen-ch'eng.

The peasant war led by Huang Ch'ao at the end of the T'ang.

Li Ch'un and the Chao-chou Bridge. Li Pai, Tu Fu, Pai Chu-yi.

3. Sung, Liao, Chin, Yuan times.

Unification of Northern Sung.

The reforms of Wang An-shih.

Gengis Khan unifies Mongolia and Kublai establishes the Yuan dynasty.

Further development and spread of the three great inventions of printing, the compass, and gunpowder.

4. Ming and Ch'ing periods.

Founding of the Ming.

Cheng Ho's travels to the Western Ocean.

The early growth of capitalism in mid and late Ming.

The peasant uprising lead by Li Tzu-ch'eng in late Ming.

The consolidation of frontier regions and a multi-nationalities state under the Ch'ing.

Cheng Ch'eng-kung's recovery of Taiwan.

The struggle in early Ch'ing against Tsarist Russian aggression.

Li Shih-chen's "The Great Pharmacopoeia."

Ts'ao Hsueh-ch'in's "Dream of the Red Chamber."

Modern Chinese History

I. The Opium War

1. Domestic and foreign situation before the war.

2. The opium suppression movement and Lin Tse-hsu's destruction of opium at the Bogue.

3. The British launch an aggressive war. The san-yuan-li people struggle to resist the British.

4. "The Sino-British Treaty of Nanking." Chinese society begins to degenerate into a semi-colonial, semi-feudal society.

II. The T'ai-p'ing Rebellion and the Second Opium War.

1. The Chin-t'ien Uprising led by Hung Hsiu-ch'uan. The T'ai-p'ing army's victorious advance and establishment of its capital at T'ien-ching. "The Heavenly Kingdom's land system."

2. British and French aggressors launch the Second Opium War. The Tsarist Russian aggressors take advantage of the situation to occupy forcibly large pieces of Chinese territory in the northeast and the northwest.

3. The struggle of the T'ai-p'ing Heavenly Kingdom in its later period to fight against reactionary Chinese and Western forces. The defeat of the T'ai-p'ing revolution.

III. The birth of Chinese capitalism

1. Westernization efforts by big landlords and big bureaucrats.

2. The birth of the Chinese proletariat.

3. The birth of the Chinese bourgeoisie.

IV. Crises in the Chinese border regions and the Sino-French and Sino-Japanese Wars

1. American and Japanese aggression against Taiwan. British and Russian aggression against Sinkiang. British aggression against Tibet.

2. The Sino-French War.

3. The Sino-Japanese War of 1894. "The Sino-Japanese Treaty of Shimonoseki." The struggle of the Chinese people and army to resist Japan's forcible occupation of Taiwan.

V. The Hundred Days Reform of 1898

1. The imperialist powers divide China into "spheres of influence"; the plot to slice up China.

2. The initial development of Chinese capitalism. The Hundred Days Reform and its collapse.

VI. The Boxer Movement

1. The rise and development of the Boxers.

2. The Boxers resist the Allied Expeditionary Force. Imperialism and the Ch'ing government contrive to strangle the Boxer Movement.

3. Tsarist Russia invades and occupies northeast China. "The Boxer Protocol of 1901." China is reduced to a semi-colonial, semi-feudal society.

VII. The Revolution of 1911

1. Sun Yat-sen's early revolutionary activities.

2. The establishment and program of the Chinese T'ung-meng-hui.

3. The Wu-ch'ang Uprising.

4. The establishment of the Republic of China. The compromise and defeat of the bourgeois revolutionary group.

VIII. The Pei-Yang Warlords' rule of darkness

1. Yuan Shih-k'ai's treason and the collapse of restoration of the dynastic rule.

2. The emergence of regional warlordism. Chang Hsun's Restoration.

3. Further development of Chinese capitalism. The growth and strengthening of the Chinese proletariat. The New Culture Movement. The dawning of a new period in the Chinese revolution.

Contemporary Chinese History

I. The establishment of the Chinese Communist Party

1. The "May 4th" Movement. The spread of Marxism-Leninism in China.

2. Comrade Mao Tse-tung's early revolutionary activities. The first National Congress of the Chinese Communist Party.

3. The first high tide of the Chinese workers movement. The Great Strike of rail workers and miners at An-yuan. The Great Strike of "February 7th."

II. The First Revolutionary Civil War

1. The establishment of a revolutionary united front led by the Chinese Communist Party. Sun Yat-sen reorganizes the Kuomintang and establishes the three great policies of "alliance with the U.S.S.R., alliance with C.C.P. members, and support for peasants and workers."

2. The "May 30th" Movement. The Canton-Hong Kong Strike. The Peasant Movement Training Institute. The publication of "Analysis of the Classes in Chinese Society."

3. Victorious advance of the Northern Expedition. Publication of "Report on an Investigation of the Peasant Movement in Hunan." The third armed uprising of Shanghai workers led by Comrade Chou En-lai.

4. The "April 12th" counterrevolutionary coup. The damage to the revolution of Ch'en Tu-hsiu's rightist capitulationist line. The July 15th counterrevolutionary coup. The failure of the First Revolutionary Civil War.

III. The Second Revolutionary Civil War

1. The "August 1st" Nan-ch'ang Uprising. The Autumn Harvest Uprising. The Canton Uprising. The establishment of the Chingkangshan revolutionary base.

2. Comrade Mao Tse-tung's theory on the survival capacity of Red power. The development of the rural base areas. The victory of the Red Army's third counterencirclement.

3. The "September 18th Incident."

4. The serious danger to the revolution of Wang Ming's "left" opportunist line. The Red Army's Long March. The Tsunyi Conference. The struggle to smash Chang Kuo-t'ao's anti-Party splinter movement. The great victory of the Long March.

5. The "December 9th" Movement. The Sian Incident.

IV. The Anti-Japanese War

1. The July 7th Marco Polo Bridge Incident. The Kuomintang's retreat from the battlefield. The development of anti-Japanese democratic base areas behind enemy lines. Publication of "On Protracted War."

2. Publication of "On New Democracy." The South Anhwei Incident. The great production movement in the liberated areas. The rectification movement in Yenan.

3. The Seventh National Congress of the Chinese Communist Party. The great victory in the anti-Japanese war.

V. The Third Revolutionary Civil War

1. The Chungking negotiations. The self-defense war in the liberated areas.

2. The smashing of the Kuomintang reactionaries' all-out and strategic offensives. The rise of the people's democratic movement in areas under Kuomintang control.

3. The Peoples' Liberation Army goes on the counteroffensive. Land reform in the liberated areas. The great victory of the three major battles.

4. The second plenum of the Seventh National Congress of the Chinese Communist Party.

5. The founding of the People's Republic of China. The Chinese new democratic revolution wins a great victory.

Modern and Contemporary World History

I. The English bourgeois revolution of 1640

II. The American War of Independence and the founding of the United States of America

III. The French bourgeois revolution

1. Class relations on the eve of revolution.

2. The revolutionary people's attack and seizure of the Bastille.

3. The Jacobin dictatorship.

IV. The English industrial revolution

1. The invention of machines.

2. The consequences of the industrial revolution.

V. The birth of scientific communism

1. The historical conditions that produced Marxism.

2. The three sources of Marxism.

3. "The Communist Manifesto."

VI. The European revolution of 1848

VII. The establishment of the First International

VIII. The Paris Commune

1. The March 18th revolution.

2. The revolutionary measures of the Paris Commune.

3. The principles of the Paris Commune are eternal.

IX. World capitalism enters the imperialist phase; the First World War

1. The formation of imperialism's two military aggression blocs.

2. The outbreak of the First World War and its character.

X. The October Socialist Revolution

1. Armed uprising in Petrograd.

2. The smashing of foreign armed intervention and domestic counterrevolutionary insurrection.

3. The October Revolution and the advent of a new era in human history.

XI. The struggle among imperialist powers for world hegemony between the two World Wars

1. The "Versailles-Washington" scheme of imperialism to divide the world again.

2. Economic crisis of the imperialist world, 1929-1933.

3. The establishment of Hitler's fascist dictatorship. The emergence of sources of wars in Europe and Asia.

4. The Munich conspiracy.

XII. The Second World War

1. The outbreak of the Second World War.

2. Fascist Germany's sudden invasion of the U.S.S.R.

3. The outbreak of the Pacific War.

4. The battle of Stalingrad.

5. The victory of the world antifascist war.

Geography

Requirements:

1. Have a command of the basic knowledge of geography and maps necessary to learn Chinese and world geography. Have an elementary ability to read ordinary maps.

2. Know the basic features of China's geographical environment and appropriate means to utilize nature, alter it, and expand production.

3. Know the geographic environments and economic situations of the world, the various continents, and individual nations.

Basic Knowledge

1. The position of the earth in the universe. The earth's shape and size. Fixed stars, planets, satellites; the solar system, Milky Way, universe.

2. The earth's rotation and the alternation of day and night. The earth's axis and two poles. Longitude and its calculation. The prime meridian. The parallels and degrees of latitude of Eastern and Western hemispheres. The equator. Northern and Southern hemispheres. The grid system of latitude and longitude.

3. Earth's revolution. Northern and southern lines of regression. Arctic and Antarctic circles. The five zones of the earth. The seasonal changes.

4. The structure of the earth's interior. Changes in the shape of the earth's surface. Internal forces and external forces.

5. The main climatic factors: Air temperature, rainfall, air pressure, wind. Important factors in determining climate: Latitude, atmospheric circulation, land and sea distribution, topography. Isotherms, isohyets.

6. Maps. Direction, scale, and legend of maps. Absolute altitude and relative altitude. Contour lines and depth lines. Hypsometry on a topographical map.

Chinese Geography

1. China's geographical location and area. Continental neighbors. Nearby oceans and seas. Oceanic neighbors. The location and abbreviated names of 30 Provinces, independent cities, and autonomous regions.

2. China's population and its distribution. Characteristics of population distribution of Han Chinese and minority peoples.

3. Characteristics of China's topography. Main mountain chains and their orientation. The four large plateaus. The three large plains. The four large basins. The Southeastern foothills and their distribution.

4. Annual changes in China's rainfall and temperature and regional variations. Division of heat zones.* Analyze maps of China's January and July temperatures and rainfall. Causes of China's seasonal windy weather. Influence of seasonal wind on China's agriculture. Cold waves. Typhoons. Rainy season.

5. China's important rivers. Different characteristics of northern and southern rivers. The Yangtze River and the Yellow River. The Grand Canal. China's important fresh water lakes. China's important interior rivers and salt water lakes. The natural situation of the Pohai, the Yellow Sea, the East China Sea, and the South China Sea.

6. China's agricultural development after Liberation. The yield-per-mou quotas for food grains in various areas stipulated by the "All-China Agricultural Development Plan." In agriculture, learn from Tachai. The distribution of important food grains, vegetable oil crops, cotton, and tropical and sub-tropical crops. Important forest areas, pasturage, and fishing grounds. The distribution of China's important mineral resources. Industrial development after Liberation. In industry, learn from Taching. The distribution of iron and steel, petroleum, coal and textile industries. Important industrial cities. The rapidly developing communications and shipping industry. Important rail lines and key stations. Important seaports.

7. Characteristics of the topography of the three northeastern Provinces. The relationship of climate and agricultural production. The transformation of the "great northern wilderness" into the great northern granary. Forest resources and their distribution. Developed heavy industry. Close-knit railway network.

---

* Commentator's note: Probably best translated as "Classification according to radiation load." Although this may seem a bit technical for high school students, it is a technique popular in Soviet climatology with which the Chinese are no doubt familiar.

8. Climatic characteristics on the middle and lower sections of the Yellow River. Soil erosion and water and soil conservation on the loess plateau. The origin of the North China plain. Harnessing seas and rivers and the Yellow River. Red Flag Canal. From the Ch'in-ling [Mountains] to the Huai River is one of China's important geographical demarcation lines. The capital, Peking. Tientsin. Yenan.

9. Characteristics of topography and climate on the middle and lower sections of the Yangtze River. Agricultural features of the Yangtze delta. Channeling off flood waters on the Ching River. Construction to channel water from the south to the north. Control of the Huai River. Shanghai. Shao Shan. Chingkangshan.

10. Characteristics of the topography and climate of the southeast seacoast region. Subtropical and tropical cash crops. Agricultural features of the Pearl River delta. The islands of the South China Sea. The government and economy of yet-to-be-liberated Taiwan Province.

11. Characteristics of the topography and climate of the Szechwan basin. The Ch'eng-tu Plain. Tou-chiang-yen irrigation system [on the Ch'eng-tu Plain]. The three gorges of the Yangtze River. The karst topography of the Yunnan-Kweichow plain. Tsunyi [county]. Vertical changes in the climate of cross ranges.* Abundant forest and water power resources. Hsi-shuang-pan-na [sub-tropical region in extreme southern Yunnan].

12. Characteristics of the topography of the Tsinghai-Tibetan plateau. Chu-lu-lang-ma [Mt. Everest]. High altitude climate. Thin air, bright sunlight, and its influence on agriculture and cattle raising. Forest resources of the south slope of the Himalayas.

13. Characteristics of the natural geography of the north and south T'ien-shan. The Turfan Depression. Takla Makan Desert. Tarim River. Lop Nor. Oasis agriculture. Newly opened areas since Liberation.

14. The important national role of Inner Mongolian animal husbandry. Irrigated agriculture of the Ningsia Plain, Ordos Plain, and the corridor west of the Yellow River. Large-scale water conservancy projects on the upper reaches of the Yellow River. Desert control.

---

* Commentator's note: Apparently refers to north-south trending parallel ranges that cross the general grain of the east-west trending southern mountains.

World Geography

1. Area of sea and land. Geographical position of the seven continents and four oceans. Demarcation lines of the continents.

2. Basic characteristics and law of distribution of the world's important climate types.

3. Seas and oceans. Undersea petroleum and other undersea mineral resources. Fishing industry and important world fishing grounds. Important world navigation lanes.

4. The area and population of the continents. World ethnography and its distribution. The distribution of important countries on the continents and famous cities and harbors. The three world divisions.*

5. Characteristics of Asian topography and climate. Important mountain chains, rivers, and lakes. Important peninsulas, islands, and straits. Geographical situation of Korea and the necessity of uniting North and South. The natural environment of Japan, its abnormally developed capitalist industry, the question of the four northern islands. Characteristics of the topography and climate of Southeast Asia. Important mineral resources and tropical economic crops. The natural situation and important agricultural products of South Asia. The important geographical location of Western Asia, petroleum resources. The region of Pakistan.

6. Seas and oceans neighboring Africa. Cape of Good Hope. Plateau continent. Sahara Desert. Tropical continent. The symmetrical distribution of climate zones north and south. Nile River. Congo River (Zaire River) and the Congo Basin. Abundant mineral resources. The plunder of Africa by new and old colonialists. Great changes in the political map of Africa. The development of national economics. The Tanzania-Zambia Railroad. The geographical position of Egypt, cotton, the Suez Canal, the pyramids. South Africa (Ah-cha-ni-ya), its geographical position, mineral resources, evil racial discrimination, and racial barriers.

7. Seas and important straits neighboring Europe. Important peninsulas. Characteristics of Europe's topography and climate. The Alps. The Danube and the Rhine. The Mediterranean Sea. The geographical situation of Romania and Yugoslavia. The composition of the English territory; changes in the new and old industrial sector, features of agriculture. France is a progressive capitalist industrial state; important industrial sectors and agricultural crops. The Federal

---

* Commentator's note: Probably refers to division into capitalist, communist, and developing/neutralist countries.

Republic of Germany and the German Democratic Republic, their geographical situation. The Soviet Union is a traditional European state, a social imperialist state; the Soviet Union's natural environment, important resources, important industrial regions, important agricultural crops.

8. Characteristics of the climate and topography of North America. Greenland. The Great Lakes. The composition of the territory of the United States, the imperialist state that represents the highest development of monopoly capital; the Mississippi River, important industrial centers, important agricultural and cattle products.

9. The origin of the name and the scope of Latin America. The Andes Mountains, the Brazilian Plateau. The Amazon River. The hot and humid climate of the Amazon Valley. The mineral resources, fishing resources, and tropical economic crops of Latin America. Latin American countries safeguard national resources and develop national economy. The Panama Canal.

10. Oceania and the scope of the Pacific archipelagos. The natural environment of Australia, important agricultural and cattle products and mineral resources.

11. Ice-bound, very cold Antarctica. Animal and mineral resources.

Foreign Language

When reviewing, the examinee should emphasize improving his ability at practical use of the foreign language and should not superficially emphasize grammatical analysis. He should also practice the use of words and word groups in sentence building.

Requirements:

1. Elementary command of segmental and suprasegmental features of pronunciation. Be able to read aloud correctly a short text of difficulty comparable to the textbook.

2. Remember well 600-800 common words.

3. Elementary command of basic grammar. (English is used as an example; other languages can be based on the basic grammar and content of this language. Refer to the requirements for English grammar [below] to determine the scope of the review.)

4. Be able to ask and answer simple questions.

5. Be able to read an easy and simple text and translate it into Chinese.

6. Be able to translate simple Chinese sentences into the foreign language.

7. Write neatly and in accordance with the rules.

Notes:

Requirements for review of basic English grammar:

1. Affirmative and negative declarative sentences.

2. Syntactic based interrogative sentences and question-word based interrogative sentences and their answers.

3. Affirmative and negative imperative sentences.

4. Constructions with "there + be ...."

5. Compound sentences linked by "and" and "but."

6. Complex conditional sentences introduced by "if" and "when."

7. The formation of noun plurals and agreement of main verb.

8. Number of personal pronouns and alternation of case.

9. Cardinal numbers from 1-100 and ordinal numbers from 1-20.

10. Comparative and superlative of adjectives and adverbs.

11. The use of auxiliary verbs "can," "may," and "must."

12. Alternations in commonly used irregular verbs.

13. The use of six tenses: Present, past, future, present progressive, past progressive, and present perfect, and the use of "to be going to."

14. Use of the passive (limited to present and past).

15. The use of the infinitive as object, complement, and adverbial modifier.

2. INDIVIDUAL SUBJECT TESTS FROM THE EXAMINATION [1]

Politics

The questions need not be copied, but the question number must be clearly indicated [on the answer sheets].

I. Explain the following terms: (4 points each, total 16 points)

1. Productive forces
2. Class
3. Practice
4. The universality of contradiction

II. Short-answer questions: (4 points each, total 24 points)

1. What social forms does human society pass through in its development from a low to a high stage?
2. What was the [Communist] Party's general line for the new democratic revolution?
3. What is the Party's general line for socialist construction? What is the general policy for developing the national economy?
4. According to the 10-year program approved by the Fifth National People's Congress [1978], what will our country's grain and steel production output be in 1985?
5. According to Chairman Mao's theory of the three worlds, what countries and regions are included in the first, second, and third worlds? Explain by giving examples.
6. What is the general rule of the movement of cognition?

III. Brief discussion questions: (10 points each, total 20 points)

1. What is the general task for the new period in our country's socialist revolution and socialist construction? Why is it said that realizing the general task is an important issue for our country's future and destiny?

---

[1] The texts used hereunder are based on translations done by the United States Government's Foreign Broadcast Information Service. Material in square brackets was added by the respective subject commentator.

2. What is the basic difference between materialist dialectics and metaphysics? Criticize the "gang of four" for spreading the fallacy of metaphysics.

IV. Essay questions: (20 points each, total 40 points)

1. Using the principle of material things first and consciousness second, discuss the importance of the Party's excellent work style of proceeding from the actual situation and seeking truth from facts.

2. Why must countries having a dictatorship of the proletariat practice democracy toward the people and impose dictatorship on the enemy? Criticize the "gang of four's" counterrevolutionary crimes of reversing the relations between the enemy and ourselves and imposing a fascist dictatorship on the people.

Mathematics

Instructions:

1. Students of natural sciences and engineering taking this examination are required to select one question from questions V and VI in addition to doing questions I through IV and question VII. Students of liberal arts taking this examination are required to select one question from questions V and VI in addition to doing questions I through IV (if all 5 questions are answered correctly, 100 points will be given): they are not required to do question VII.

2. When answering questions, students taking this examination are not required to copy the questions, but the question numbers must be written correctly, such as (I) 2, (V), etc.

(I) (The possible score for each of the following questions is 4 points; the total for all 5 questions is 20 points.)

1. Factorize: $x^2 - 4xy + 4y^2 - 4z^2$

2. The given length of the side of a square is "a." Find the volume of a right circular cylinder whose lateral area is equal to the area of the square and whose height is equal to the length of the side of the square.

3. Find the domain of the function $y = \sqrt{\lg(2+x)}$

4. Find the value of $\cos 80^\circ \cos 35^\circ + \cos 10^\circ \cos 55^\circ$ without using tables.

5. Simplify: $$\left(\frac{1}{4}\right)^{-\frac{1}{2}} \frac{\left(\sqrt{4ab^{-1}}\right)^3}{(0.1)^{-2}\,(a^3b^{-4})^{\frac{1}{2}}}$$

(II) (The possible score for this question is 14 points.)

The given equation is $kx^2 + y^2 = 4$, in which the k is a real number. For all values of k, point out separately the type of curve represented by the equation and sketch a graph illustrating the characteristics [of the resulting curves].

(III) (The possible score for this question is 14 points.)

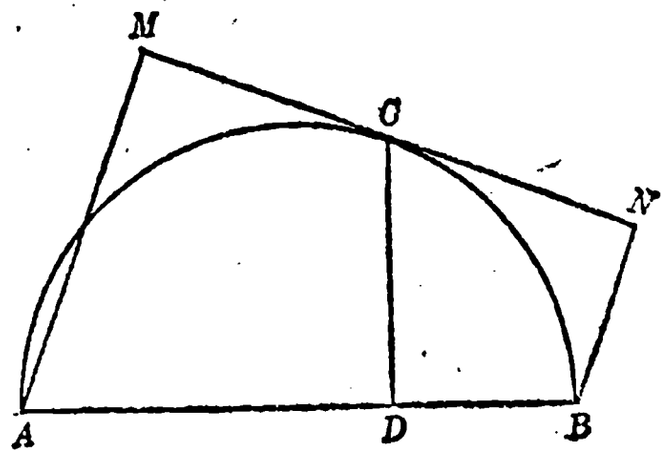

(As [shown] in the diagram) AB is the diameter of a semi-circle, C is a point on the semi-circle, the straight line MN is tangent to the semi-circle at point C, AM is perpendicular to MN at point M, BN is perpendicular to MN at point N, CD is perpendicular to AB at point D.

Prove: 1) $CD = CM = CN$

2) $CD^2 = AM \cdot BN$

(IV) (The possible score for this question is 12 points.)

Given: $\log_{18} 9 = a \ (a \neq 2)$, $18^b = 5$. Find $\log_{36} 45$.

(V) (The possible score for this question is 20 points; select only one question between this question and question VI.)

Already given is [the fact that] the sizes of th ee interior angles of triangle ABC are in an arithmetic sequence and $t_gAt_gC = 2 + \sqrt{3}$. Find the sizes of angles A, B, and C. It is also known that the height of vertex C from the opposite side c is $4\sqrt{3}$. Find the lengths of the various sides a, b, c of the triangle. (Hint: When necessary, try to prove $(1 + \sqrt{3})^2 = 4 + 2\sqrt{3}$.)

(VI) (The possible score for this question is 20 points.)

Given a and b are acute angles, and

$$3\sin^2 a + 2\sin^2 b = 1,$$

$$3\sin 2a - 2\sin 2b = 0$$

Prove: $a + 2b = \frac{\pi}{2}$

(VII) (The possible score for this question is 20 points; students of liberal arts are not required to do this question.)
Given that the function of $y = x^2 + (2m + 1)x + m^2 - 1$, (and that m is a real number).

1) What numerical value does m have to be when the extremum of y is 0?

2) Prove: No matter what numerical value m has, the vertices of the graphs of the function (i.e., the parabolas) are all on the same straight line l_1. Draw a rough diagram of the parabolas when m = -1, 0, and 1 to test this conclusion.

3) Among the straight lines that are parallel to l_1, which lines intersect the parabolas, which do not? Prove that any straight line that is parallel to l_1 and intersects the parabolas is dissected into equal line segments by the various parabolas.

Physics

Notes for those taking the examination:

(1) The examination consists of seven questions, to be answered within 120 minutes.

(2) The parentheses ( ) after each test question show the number of points allotted to that question.

(3) The answers to the "Fill in the Blanks" question are to be entered in the blanks provided. When answering the other questions, you need not copy the question, but the number of the question must be clearly indicated on your answer sheets.

(4) The formulas, important steps in mathematical computations, and written explanations you use in answering the questions must be shown on your answer sheets. No credit can be given for any questions for which only the final answers are written down and for which the major steps in the computations are not shown.

(5) For all computational questions, after you have completed your calculations you must clearly write out the final figures and units of the answer.

(6) Scratch paper used for computations, test questions, and answer sheets must all be turned in together.

---

1. Fill in the Blanks

(1) When changes take place in the ( ) that passes through a coil, an induced electromotive force is produced in the coil. The strength of the induced electromotive force, aside from what is proportional to the number of turns in the coil, is directly proportional to the ( ).

(2) In the course of its swinging motion, the velocity and acceleration of a simple pendulum vary with time. In the process of movement from the point of greatest displacement to a position of equilibrium, the velocity becomes ever ( ), while the acceleration becomes ever ( ).

(3) In the radiation emitted by naturally radioactive elements, it has already been explained that alpha-rays are ( ) and gamma-rays are ( ).

(4) The velocity of propagation of sound in air at 20°C is 340 meters per second. If its frequency is 100 hertz, then its wave length is ( ).

(5) The distance between two point electrical charges is a, and their interactive force is f; if the distance is increased to 2a, then the interactive force will change to ( ). (10 points)

2. In the circuit shown in the diagram below, the resistance of the three resistors are, respectively, R_1 = 2 ohms, R_2 = 4 ohms, and R_3 = 4 ohms. The battery's electromotive force E = 4.2 volts, and the internal resistance r = 0.2 ohms. Find:

(1) The voltage ratio V_1/V_2 between the two points R_1 and R_2 when switch K is on and switch K' is off;

(2) The voltage ratio V'_1/V'_2 between the two points R_1 and R_2 when the two switches are both on;

(3) The strength of the current I_1 passing through R_1 when the two switches are both on. (10 points)

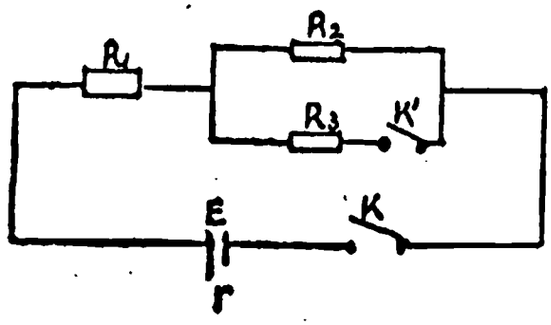

3. A camera is used to take a picture of an object, and it is given that the focal length of its lens (a convex lens) is 13.5 cm, the distance between the lens and the negative is 15 cm, and the image of that object on the negative is 5 cm high.

(1) What is the height of that object?

(2) Draw a diagram tracing the path of the light rays through the camera as it displays the image of that object on its negative. (13 points)

4. A voltampere meter is built with an electric circuit as drawn in the diagram below. The galvanometer G has a measuring range of 0.001 ampere with an internal resistance of 100 ohm, the resistance at R_1 is 9900 ohm and at R_2 is 1.01 ohm.

(1) On which side of the double pole double-throw switch is the ampere meter, and on which side is the voltmeter?

(2) What are the measuring ranges of the ampere meter and the voltmeter? (13 points)

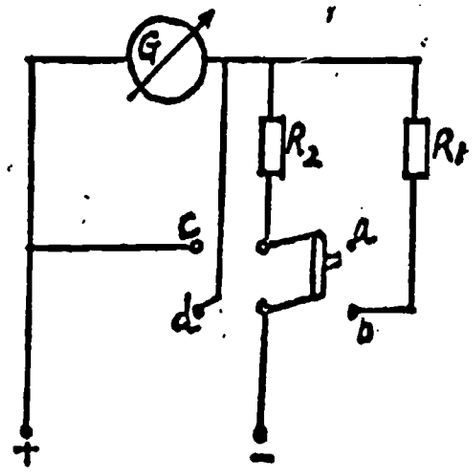

5. When a hydrometer weighing 14 grams is put into water (as shown in the diagram), the water surface reaches mark A; when it is put into kerosene, the kerosene surface reaches mark B. Given that the specific gravity of kerosene is $d = 0.8\ gm/cm^3$ and the outer radius of the glass tube of the hydrometer is $r = 0.75$ cm, what is the distance between A and B? (14 points)

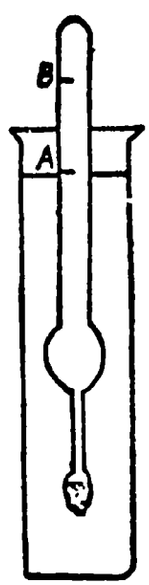

6. A block of wood weighing 2,000 grams (M = 2,000 gm) placed on the smooth surface of a table 0.8 meters high (h = 0.8 m) is hit by a bullet that flies horizontally and that becomes lodged in the block, causing the block to fall and come to rest at a point 1.6 meters from the side of the table (measured horizontally); the mass of the bullet is 10 grams (m = 10 gm).

(1) What is the speed of the bullet when it hits the block?

(2) If 90% of the heat generated by the impact is absorbed by the bullet, how many degrees will the temperature of the bullet be increased? (Assuming the bullet's specific heat is 0.09 cal/gm-degree, and g = 10m/second^2, without taking air resistance into account.)

(20 points)

7. A U-shaped frame made of conductive material, 1 meter wide (L = 1m), whose surface forms an angle of 30 degrees with the horizontal plane (alpha = 30°), is shown in the diagram below. Not taking into account the electric resistance of the frame, if there is a magnetic field of even strength forming a vertical angle with the surface of that frame, if the strength of the magnetic induction $B = 0.2 \frac{\text{weber}}{m^2}$, and if a conductive bar *ab* whose mass is 0.2 kilograms (m = 0.2kg) and whose effective resistance is 0.1 ohm (R = 0.1 ohm) is placed across the U-shaped frame and is able to slide down without friction, answer the following questions:

(1) What is the maximum downward sliding speed (v_m) of the conductive bar *ab*?

(2) At maximum speed (v_m), what is the electric output of *ab*?

(20 points)

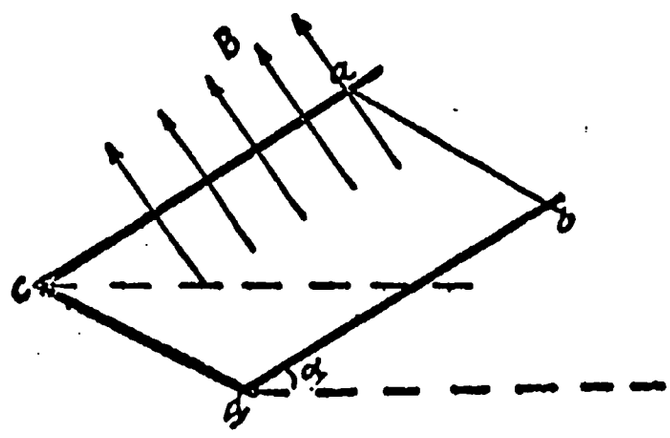

Chemistry

Note: Write your examination number on the question paper and hand it in with the answer paper.

I. (This section is worth 17 points.)

The nuclear charge number of element *a* is 17, and the positive ion of element *b* has the same electron shell structure as does the argon atom (atomic number = 18). Answer the following questions: (the question need not be copied, but question number and the blank space number must be clearly marked on the answer paper).

1. In the periodic table, element *a* is located at the ___①___ period and the ___②___ main group, the element symbol is ___③___, and the molecular formula for the highest maximum positive value oxide which is equivalent to the hydrolyzed compound is ___④___.

2. In the periodic table, element *b* is located at the ___⑤___ period and the ___⑥___ main group, the element symbol is ___⑦___, and the molecular formula for the highest maximum positive value oxide which is equivalent to the hydrolyzed compound is ___⑧___.

3. In what type of chemical bond do these two elements combine? Can the solid form of this chemical compound conduct electricity? Can its aqueous solution conduct electricity?

4. Which is more strongly alkaline, the hydroxide of element *b* or barium hydroxide?

5. Which has the stronger reducing power, the negative monovalent ion of element *a* or that of iodine?

II. (This section is worth 16 points.)

1. "The volume of one gram molecule of any matter is equal to 22.4 liters." Is this statement correct? Revise the statement if it is incorrect.

2. The pH value of potassium carbonate aqueous solution is equal to 7, greater than 7, or less than 7? Explain.

3. From 1,000 milliliters of 2N sulfuric acid solution, take out 10 milliliters. What are the equivalent weight concentration and gram molecular concentration (molar concentration) of this 10 milliliters of solution?

4. Will copper react with dilute hydrochloric acid? Will copper react with concentrated sulfuric acid? Write the chemical equation if there is a reaction. Explain if there is no reaction.

III. (This section is worth 13 points.)

1. Write the names or structual formulas for the following organic compounds, and specify which of them are isomers:

(1) 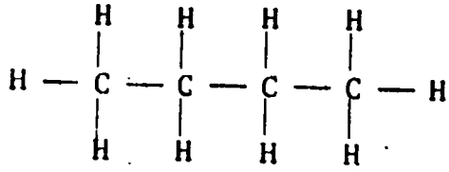

(2) 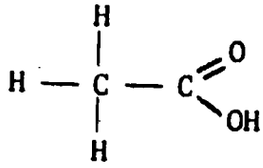

(3) 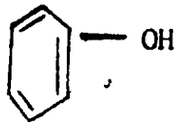

(4) ethyl acetate

(5) 2-isobutane

2. Both ethylene and acetylene are capable of reacting additively with water under specified conditions. In each case, give the chemical equation for the reaction (organic compounds must be written in structural formulas) and give the names of the products.

IV. (This section is worth 18 points.)

1. In a laboratory only the apparatus given below is available. If we want to produce gaseous hydrogen, oxygen, and chlorine at the same time, which piece of apparatus should be used for each? (Simply indicate A, B, or C, without a sketch.)

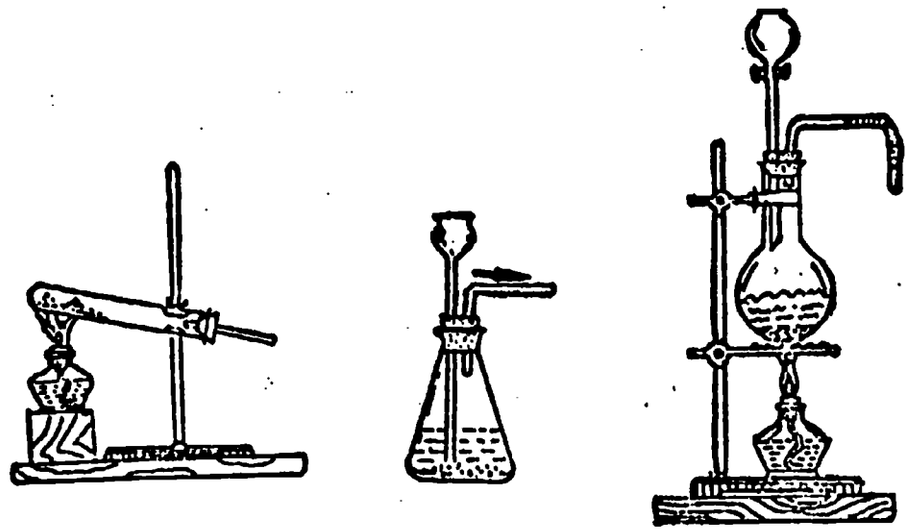

(A) (B) (C)

2. In figure B why must the thistle tube be inserted into the solution?

3. Give the chemical equation for the preparation of each of these three gases and explain the conditions of the reactions. Indicate separately which element is oxidized and which element is reduced. Indicate the direction of the electron transfer (with an arrow head) and the total number transferred.

V. (This section is worth 16 points.)

A sample of white powder is a mixture of two out of five compounds -- KCl, $(NH_4)_2SO_4$, $(NH_4)_2CO_3$, $Ca(NO_3)_2$, and $BaCl_2$. It is subjected to the following tests in sequence:

Step 1: When the white powder and slaked lime (calcium hydroxide) are ground together, a colorless gas is released. The gas turns a moistened red litmus paper blue.

Step 2: A small amount of the white powder is added to a sufficient amount of water and then stirred thoroughly. A white precipitate remains. The filtration method is used to separate and the precipitate does not dissolve in nitric acid.

Step 3: When a solution of silver nitrate is added to the clarified filtrate derived from the above-mentioned separation, again a white precipitate is produced. Again add nitric acid and the precipitate does not dissolve.

Questions:

1. According to the above-cited experiment, what conclusions can be drawn at each step?

2. The sample of white powder was formed by mixing which two chemical compounds?

3. Write the relevant equations for the chemical reactions. If these are ionic reactions, only a simple ionic equation is required.

VI. (This section is worth 20 points.)

1. What is the gram molecular concentration of 32% nitric acid solution (when the specific gravity is 1.2)?

2. Take 300 milligrams of alloy comprised of copper and silver and dissolve it in nitric acid and, after diluting it with the proper amount of water, add 24.0 milliliters of 0.1M sodium chloride solution, thus making the silver precipitate out completely. Find the percentage composition of copper and silver in the alloy.

NOTE: (1) atomic weights: Ag 108, Cl 35.5, Cu 63.5, O 16.0, H 1.0, N 14.0, Na 23.0

(2) In calculating your result, work to one decimal place, rounding up to 5 or more in the second decimal place.

History

(Note: In the upper right corner of this test paper, write your examination number, and attach your essay question papers to the test paper.)

I. Completion questions: (Total 20 points. Write your answers in the spaces provided.)

1. During the Shang Dynasty the laboring people of our country used an alloy of copper and tin to cast tools and weapons called _____ implements. It signalled a new level in the development of the forces of production.

2. During the reign of T'ai Tsung in the T'ang Dynasty, the Tibetan leader _____ married _____, thus promoting economic and cultural interchange between the Han and Tibetan peoples and effecting a close relationship between the Han and Tibetan peoples.

3. During the peasants' righteous rebellion in the final days of the Yuan Dynasty, Chu Sheng proposed to _____ that "the walls be built high, grain be widely stored, and the assumption of the title of prince be postponed."

4. Toward the end of the Ming Dynasty, the peasant revolt led by Li Tzu-ch'eng raised the revolutionary slogan of _____.

5. During the Opium War, people in the northern suburb _____ (placename) of Canton stoutly resisted the invading English army, displaying the Chinese people's heroic spirit of being unafraid of the strong and the cruel and daring to engage the enemy in battle.

6. During half a century beginning in the 1850's, Tsarist Russian imperialism forcibly occupied _____ square kilometers of our country's territory.

7. In 1924, with the help of the Chinese Communist Party, _____ reformed the Kuomintang and established the three great policies of "_____, _____, and _____."

8. On 11 December 1927, comrades Chang T'ai-lei, Yeh T'ing, and Yeh Chien-ying led the _____ uprising.

9. In the year _____, Comrade _____ and Comrade _____ led part of the Nanch'ang Uprising troops and the Hunanese Peasant Army to Chingkangshan, where they victoriously joined forces with the revolutionary troops led by Chairman Mao.

10. In May 1938, Chairman Mao published "_____," clearly pointing out the objective laws for development of the War of Resistance Against Japan and the path to victory, and criticizing the _____ theory and the _____ theory, thereby greatly inspiring and strengthening the belief of the people throughout the country that they would be victorious in this war.

11. Our country's _____ printing method was created during the Sui Dynasty, and in the Northern Sung Dynasty Pi Sheng further invented the _____ technique of printing.

12. Prior to the First World War, the imperialist countries formed two military blocs: The Triple Alliance comprising _____, _____, and _____ and the Triple Entente comprising _____, _____, and _____.

13. German classical philosophy as represented by _____ and _____ was one of the three sources of Marxism.

14. Marx and Engels at the end of "The Communist Manifesto" issued the following great call to the international proletariat: "_____!"

15. Before the Second World War the imperialist countries England and France pursued the _____ policy, and in September 1938 signed the _____ Pact with the fascist countries Germany and Italy, paving the way for Hitler's aggression.

II. Briefly describe the important events in world or Chinese history that occurred in the years listed below: (Total 5 points. Write your answers following each date.)

221 B.C. ——

209 B.C. ——

1640 A.D. (foreign) ——

1776 A.D. (foreign) ——

1789 A.D. (foreign) ——

1840 A.D. ——

1871 A.D. (foreign) ——

1900 A.D. ——

1911 A.D. ——

1917 A.D. (foreign) ——

III. On the map trace the route taken by the troops of the T'ai-p'ing Heavenly Kingdom from the Chin-t'ien uprising to the establishment of the Heavenly Capital. (Draw a continuous line connecting six cities from which the army commenced its march, through which it passed, and at which it ended its progress. Do not connect more than six cities.) (5 points)

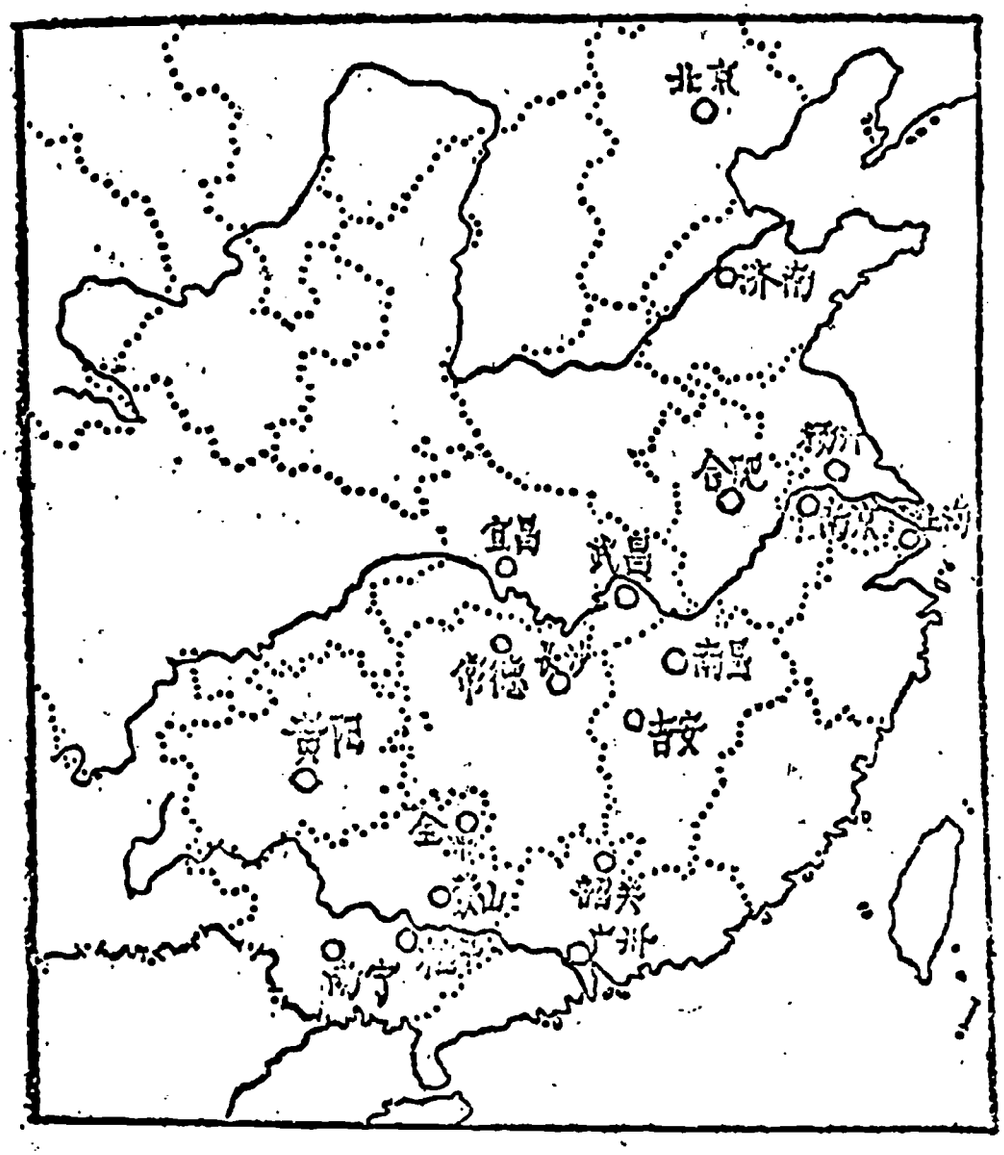

The Route of the Progress of the Army of the T'ai-p'ing T'ien-kuo Rebellion

IV. Briefly explain the following names and terms: (Each question 5 points, total 25 points. Write your answer in the blank space under each term.)

1. "The Historical Records" [the *Shih Chi*]

2. Battle of Kuan-tu

3. Cheng Ho

4. Battle of Mengliangku

5. Versailles Conference

V. Essay questions: (Total 45 points. Write your answers on separate essay question papers. It is not necessary to copy the question, but clearly indicate its number.)

1. On the basis of the changes in political and economic conditions before and after the Opium War, analyze how our country began to sink into the condition of a semi-colonial, semi-feudal society. (15 points)

2. Pick out and describe Comrade Chou En-lai's important revolutionary activities during each period of our country's democratic revolution. (18 points)

3. Give three examples of sudden attacks launched by the imperialist countries during the Second World War, and explain the historical lessons they convey. (12 points)

English Language*

Directions for Examinees

1. Do not copy down the question; write all answers on the test paper.
2. Only one answer is allowed per question.
3. For the fill-in-the-blank section, you only need to underline the answer; do not write in the blank.

I. Fill in the blank (underline the word or phrase that is required to complete each sentence). (This section contains 30 questions worth 1 point each.)

Example: *It is time _____ class.*

A. *to* B. *in* C. *for*

1. *There _____ no water in the glass.*

A. *has* B. *are* C. *is*

2. *This pen was given me by my mother. It's _____.*

A. *my* B. *mine* C. *to me*

3. *_____ tractors helpful to the commune members?*

A. *Is this* B. *Are these* C. *Are theirs*

4. *Which subject do you like _____, physics or chemistry?*

A. *the most* B. *the best* C. *better*

5. *The Yellow River is the second _____ river in China.*

A. *long* B. *longer* C. *longest*

6. *The boat is passing _____ the bridge.*

A. *under* B. *through* C. *across*

---

* Editor's note: Those parts of the test that were written in the English language in the original are in italics in this translation; the remaining parts were in Chinese in the original.

7. He went to Nanking _____ October, 1977.

A. in B. on C. at

8. Taiwan is _____ the east of Fukien.

A. in B. at C. to

9. His "Selected Poems" _____ first published in 1965.

A. were B. was C. has been

10. Did yo _____ to his talk yesterday?

A. hear B. heard C. listen

11. Who is _____ of you three?

A. older B. oldest C. the oldest

12. My aunt _____ to see us. She'll be here soon.

A. comes B. is coming C. had come

13. Mathematics _____ the language of science.

A. is B. are going to be C. are

14. _____ people attended the meeting last night.

A. A hundred of B. Hundred C. Hundreds of

15. What do you usually do _____?

A. in an evening B. in the evening C. on the evening

16. When I got to the top of the mountain, the sun _____.

A. was shining B. shone C. has shone

17. He is very old, _____ he still works very hard.

A. but B. if C. when

18. He has already worked for _____ hour.

A. the B. an C. a

19. My brother is very good _____ ping-pong.

A. in B. for C. at

20. *The poor peasants all had a _____ life before liberation.*

A. *suffered* B. *cruel* C. *bitter*

21. *I've heard him _____ about you often.*

A. *spoke* B. *speaks* C. *speak*

22. *When did you _____ my letter?*

A. *receive* B. *accept* C. *got*

23. *I need a day or two _____.*

A. *to think it over* B. *to think over it* C. *of thinking*

24. *We must _____ the importance of the four modernizations.*

A. *learn by heart* B. *keep in mind* C. *know by heart*

25. *We _____ a spare-time study group last week.*

A. *set up* B. *put up* C. *have established*

26. *My father _____ me to become a doctor.*

A. *thinks* B. *says* C. *hopes*

27. *He is _____ thin.*

A. *fairly* B. *rather* C. *little*

28. *We waited _____ for the bus.*

A. *for long time* B. *a long time* C. *some long time*

29. *In this factory, it's hard to tell cadres _____ workers.*

A. *from* B. *to* C. *about*

30. *I _____ Hsiao Li since she was a little girl.*

A. *knew* B. *know* C. *have known*

II. Sentence Pattern Transformation. (This section contains 5 questions worth 2 points each).

A. Ask a question requiring each sentence as an answer, replacing the underlined portion with an interrogative pronoun:

1. *This is <u>my</u> dictionary.*

2. *She often carries water for Granny Wang.*

B. Change to the negative:

3. *I think he'll go there tomorrow.*

C. Change to the passive voice:

4. *We chose Chang Hua League secretary.*

5. *Our teacher always takes good care of us.*

III. Translate from Chinese to English. (There are 6 sentences worth a total of 20 points; the first 5 sentences are worth 3 points each and the last one is worth 5 points.)

1. He is old enough to join the army.

2. The north is colder than the south in the winter.

3. When Comrade Chang came in, I was reading the newspaper.

4. Since the Great Proletarian Cultural Revolution, we have built a reservoir and a power station in our commune.

5. The Party Central Committee, headed by Chairman Hua, is in the midst of leading us forward on a new Long March.

6. Scientists have received the praise of people of the whole nation because they make a valuable contribution to the development of science.

IV. In the blanks provided in the short paragraph below, fill in the word that is correct both grammatically and in meaning. (10 questions [blanks] worth 1 point each.)

Premier Chou came to _____ my grandmother the first time he _____ Tachai. I shouted into Granny's _____, "Granny, the Premier's here. He's come all the _____ from Peking to see you!"

"How _____ we are to meet you, Premier Chou!" said Granny. "How did you get here and how _____ are you going to stay?"

The Premier said, "I came by _____, so the journey took me only a few hours. I _____ think I can stay in Tachai very long, because I've got a _____ of work to do in Peking. I _____ be back today."

V. Read the following short selection. At the end of the selection, there are four questions with four answer choices for each (A,B,C,D). There is only one correct answer. Draw a line underneath the answer you consider to be the correct one. (This section is worth 20 points, with each question worth 5 points.)

*The Gold in the Orchard**

There was once a farmer who had a fine orchard. He worked very hard all his life and the orchard always did well. But he knew that his three sons looked down upon farm work, and were only interested in getting rich quickly.

When the farmer was old and knew he was going to die, he called his three sons to him and said, "My sons, there's a lot of gold hidden in the orchard. Dig for it, if you want to have it."

The sons tried to get him to tell them the exact place where the gold was hidden, but he said nothing more.

After the farmer was dead, the sons went to look for the gold. Since they didn't know where the hiding-place was, they decided to begin digging all over the orchard. They dug and dug, but no gold was found. Finally they had to give up the attempt.

The next summer, the fruit crop was the biggest they had ever had. This was because of the thorough digging the orchard had got.

When the three sons saw the great amount of money they got after they sold the fruit, they suddenly understood what their wise father had meant when he said, "There's gold hidden in the orchard. Dig for it."

---

* *orchard* [Chinese translation of this word supplied here.]

1. *When the old farmer was living,*

   A. *the orchard gave rich crops each year.*
   B. *the orchard gave rich crops only when the weather conditions were good.*
   C. *the orchard had an average crop.*
   D. *the fruit crop was usually poor.*

2. *Say which of the following statements is true:*

   A. *The farmer's sons were lazy and had never worked on the farm.*
   B. *The farmer's sons did a lot of buying and selling in town so as to get rich quickly.*
   C. *The farmer's sons loved farm work, because their father, who was hardworking all his life, had told them to work hard.*

   D. *The farmer's sons considered farm work worthless.*

3. *When the sons asked their father to tell them the exact place where the gold was hidden, he told them nothing, because*

   A. *he was dying.*
   B. *he thought they understood what he meant.*
   C. *he wanted them to dig the orchard all over.*
   D. *the gold could easily be found.*

4. *No gold was found because*

   A. *the farmer's sons hadn't dug the orchard deep enough.*
   B. *the gold had been stolen.*
   C. *the farmer's sons didn't know in what part of the orchard the gold was hidden.*
   D. *there was no gold hidden in the orchard.*

VI. Translate from English to Chinese. (This section is worth 10 points.)

A few stars are known which are hardly bigger than the earth, but the majority[1] are so large that hundreds of thousands of earths could be packed[2] inside each and leave room to spare; here and there we come upon a giant star large enough to contain millions of millions of earths. And the total number of stars in the universe[3] is probably something like the total number of grains of sand on all the seashores of the world. Such is the littleness of our home in space when measured up against the total substance of the universe.

1. *the majority* [Chinese translation supplied]

2. *pack* [Chinese translation supplied]

3. *universe* [Chinese translation supplied]

PART III. SUBJECT-BY-SUBJECT COMMENTARIES ON THE CHINESE MATERIALS

1. POLITICS: *by Dr. Michael Lindsay, Professor Emeritus of International Service, The American University*

Assessment of the 1978 Chinese Materials

There is no equivalent in American education to the subject "Politics" in the Chinese school curriculum. The treatment of this subject in the 1978 *Review Outline* and examination shows that the People's Republic of China is a state with a single orthodox philosophy covering all aspects of life. The nearest equivalent to this situation in the West would be the period before the 17th century when Aristotle and Saint Thomas Aquinas were considered unquestioned authorities on all subjects. It could be argued that a less systematic general philosophy has a widespread influence in contemporary American education, but it certainly does not have a monopoly of influence and it shows itself by implication rather than explicitly. Moreover, American education, at least in principle, encourages students to think for themselves and to use their critical faculties, while the Chinese syllabus and examination in "Politics" suggest that candidates are required simply to reproduce what they have been taught and not to raise any awkward questions about its truthfulness or consistency.

The first section of the *Review Outline*, entitled "General Knowledge of Dialectical Materialism," covers the basic philosophy of Marxism-Leninism. It can only be understood with some background knowledge of the concepts and technical terms involved. Most American high school students, and many other Americans, would find it unintelligible without a good deal of explanation.

Consider, for example, the term "materialism," which occurs very frequently in this first section of the outline. This term is used in Communist writings with two very different meanings. In some contexts it means "...the recognition of the outside world, the existence of things outside and independent of our mind" (quotation from Lenin's *Materialism and Empirio-criticism)*. The contrasting concept, "idealism," which Lenin criticized, is the positivist view that our knowledge comes only from our sense impressions, and that to assume the existence of an objective world outside the mind is "an unproven and undemonstrable dogma" (quotation from *The Grammar of Science*, by Karl Pearson). Many people would consider materialism, with this first meaning, to be in accord with common sense and not to be incompatible with religion; most Christians, for example, believe that God exists outside and independent of our minds. In other contexts, however, Communists use "materialism" to mean that everything can be completely explained in terms of the already known principles of natural science. Materialism in this second sense forms the basis for Communist attacks on religion. The Chinese term for "materialism" used in the outline and the examination has this latter meaning.

It is also important to understand the concept of "contradiction" introduced in the first section of the outline. As a Communist technical term, "contradiction" means that opposing influences or tendencies can be found in all situations and that conflicts among various interests exist in almost all societies.

The second section of the outline, "Brief History of Social Development," gives a crude and simplified version of the theory of history developed by Marx and Engels, plus Lenin's theory of imperialism. This section maintains that the form of production and class conflicts determine the development of history, and that all societies must inevitably go through the same stages--primitive communism, slave society, feudalism, capitalism, socialism, and, finally, the ideal communist society. The section is marked by dogmatic assertions such as "capitalism must perish, socialism must be victorious" and "human society must march towards communism."

Actually, Marx himself recognized that economic forces and class conflicts were not the only influences on the development of history and that his postulated stages of social development might not fit all parts of the world. He wrote about "the Asiatic mode of production," which would allow a different line of development for China. To fit China into the crude Marxist scheme, official Chinese Communist history has to make feudalism start with the establishment of the centralized empire in the 3d century B.C. and continue for some two thousand years. Several non-Communist historians, on the other hand, take the centralized empire as *ending* feudalism in China. It can also be argued that something like feudalism started to develop in China during periods when the authority of the centralized bureaucratic state broke down, but never developed to the extent of European or Japanese feudalism. For most of Chinese history, in fact, officials rather than landowners formed the ruling class.

The first four parts of the outline's third section, "General Knowledge of Scientific Socialism," are standard Marxism-Leninism except for Mao Tse-tung's concept of "contradictions among the people." Mao departed from Soviet orthodoxy by saying that conflicts of interests continued in a socialist society, though they were different from the irreconcilable conflicts arising from class struggle.

In Marx's view, the transition from capitalism to socialism must come through a revolution led by the industrial proletariat. In almost all cases the revolution would have to be violent and would have to be followed by a period during which the proletariat monopolized power to suppress the former ruling classes. (In Marxist terminology, "dictatorship" refers to the monopoly of power by a class, not by an individual.) Lenin added the view that the proletariat must be led by a highly disciplined Communist Party, which, by definition, represents the proletariat. He also stressed the importance of an alliance between the proletariat and the peasants.

Much of the fifth, sixth, and seventh parts of the third section presents a Chinese view that differs from the Soviet approach. In the Soviet view, the transition from capitalism to socialism is irreversible. In the Chinese view, without a continuous revolution a socialist society may regress to capitalism, and the Chinese in fact allege that Khrushchev and Brezhnev are "revisionists" who have restored capitalism in the Soviet Union.

"Revisionism" is the Communist term for heresy--departure from the true doctrine of Marxism-Leninism. Historically, it has had the connotation of "rightist" deviation. For a long time the Soviet-controlled Communist International (Comintern) was the accepted authority for defining true doctrine. Now, "revisionism" has become little more than a term of abuse between practitioners of different variants of Marxism-Leninism.

The seventh part of the third section also gives Mao Tse-tung's analysis of the current world situation. In this analysis, China is the natural leader of the revolutionary third world, the poor underdeveloped countries, against the two great powers aiming at world hegemony, the Soviet Union and the United States. In between are the other economically developed countries, which may act as temporary allies of the third world against the hegemonic powers.

The fourth section of the outline, entitled "General Knowledge of the Chinese Revolution and Construction," covers the history of the Chinese Communist Party from its foundation to 1978. The first part covers the period up to 1936, and seems designed to emphasize the importance of Mao in these early years by ascribing special significance to activities in which he played a prominent role. There is an odd hiatus in the outline for the period of the war against Japan and the civil war that followed; the second part of the section begins only with the establishment of the People's Republic of China in 1949. In dealing with recent years, this section of the outline is distorted and evasive. It is distorted in bracketing together Liu Shao-ch'i and the "gang of four" as "bourgeois headquarters" although Liu and the "gang" were actually at nearly opposite ends of the political spectrum; while he could hardly be correctly called "bourgeois," Liu was a relatively pragmatic organization man, whereas the "gang's" position was clearly extreme "left," emphasizing the utopian and egalitarian elements in Marxism-Leninism. In addition, this section is evasive in ignoring the crucial question of the degree to which the new post-Mao leaders have reversed Mao's policies since 1977.

One final point about the 1978 *Review Outline* in "Politics" as a whole is perhaps in order. It should be noted that this syllabus was produced during an official campaign to denounce the "gang of four." This circumstance presumably explains the preoccupation with the "gang" reflected in five separate hostile references to them in three different sections of the outline.

The actual test in "Politics" included in the examination adheres quite closely to the contents of the *Review Outline*. All five sections of the outline are represented in the test questions, but the emphasis in the test is on recent political developments and particularly on the examinee's ability to criticize the "gang of four." The four 4-point questions in the first group on the test require definitions or explanations of Marxist-Leninist concepts. The six 4-point questions in the second group call for concise, descriptive answers; three of these questions are related to the fourth section of the syllabus, and each of the three other lengthy sections of the outline is represented by one of the three remaining questions. One of the 10-point questions in the third group is on the current programs of the new leadership; the other question in this group calls for criticism of the "gang of four" on philosophical grounds. The first 20-point essay is philosophical/historical but is also related to the new Party line; the slogan "seek truth from facts" was used by Mao Tse-tung in the Rectification Campaign of the early 1940's and has been revived in many recent articles as a basis for attacking the dogmatism of the "gang." The second 20-point essay is related to the third section of the syllabus and calls again for criticism of the "gang of four."

To judge the difficulty of the examination, one would really need to have a sample of the students' papers with the examiners' markings. Candidates could give adequate answers to all the questions if they could reproduce the appropriate passages from their textbooks or classroom notes on Marxism-Leninism and from articles in the *People's Daily* giving the current Party line. What one cannot tell without having a sample of marked papers is whether the examination actually demanded more than the ability to memorize.

Comparison of the Examination Review Outlines for 1978 and 1959

Compared to the 1959 examination outline, the 1978 outline for "Politics" is much longer and much more general and theoretical. The emphasis in 1959 was heavily on current affairs. The 1959 outline prescribed eight specific items to be read for review purposes; all of the items were Chinese Communist documents, and seven of the eight were dated in the 1950's. Of the twelve "points to be noted by candidates" listed in the 1959 outline, five are related to policies started in 1958 and one refers to events in 1957; only four are related to general Marxist-Leninist-Maoist theory.

The 1978 outline does not specify required readings but demands a wide general knowledge of Marxism-Leninism-Mao Tse-tung Thought. The passages related to current affairs form only a small proportion of the total.

From a comparison of the examination review outlines for 1959 and 1978, one can see two important shifts in the Party line. According to the 1959 outline, "...the socialist camp [is] headed by the Soviet Union."

In the 1978 outline, the Soviet Unions's leaders have become "revisionist" and have "betrayed the proletarian revolution...," and the U.S.S.R. has joined the United States as "the collective enemy of all the world's people." The 1959 syllabus also reflects the Chinese position at that time which heralded the communes (established in 1958) as the beginning of the transition from socialism to communism, while the 1978 syllabus contains no explicit reference to the communes and merely notes that "the transition from capitalism to communism is a relatively long historical stage."

2. CHINESE LANGUAGE: *by Dr. Frederich W. Mote, Professor of East Asian Studies, Princeton University*

Assessment of the 1978 Chinese Materials

The 1978 *Review Outline's* section on Chinese language is strictly a commonsense set of guidelines. It refers to current political issues only once (item 1. under "Writing"), and there to steer the examinee *away* from politicized models. The effect must have been to surprise the candidates by the absence of explicit demands for evidence of a current political stance and by the emphasis on writing and reading skills *per se*.

Moreover, the review guide puts the student on his own resources to locate appropriate study materials and models in current locally used textbooks. He is advised to maintain a "suitable proportion" of old classical to contemporary colloquial writings in choosing review materials. Nothing other than recent "gang of four" dogmatic writings is declared off limits.

The outline is very simply and reasonably organized under two major headings, "Readings" and "Writing," neither of which is indicated to be of greater importance than the other. The presentation could scarcely be further pared-down, more direct, or more neutral. It should nonetheless be effective, at least with students having some initiative and self-confidence.

A comparison of the level of knowledge of one's native language required of prospective college entrants in China and in the United States is difficult to make, since a student's mastery of his own language is not readily susceptible to objective comparison across cultural boundaries. Consequently, the United States-China comparison has more meaning in most other fields than it does in the area of standards in the use of the basic national language.

In any event, the 1978 *Review Outline* is so general that it does not really reveal the level of language skills required on the examination. The basic injunction to the examinee is simply to write clearly and grammatically; that is less an indication of standards than would be the demand, for example, that an examinee in geometry be able to write from memory certain theorems and be able to apply them in solutions of certain kinds of problems. The 1978 outline also provides insufficient basis for a comparison of American and Chinese requirements regarding knowledge of literature. It does not include any indication of the Chinese literary works with which the examinee must be familiar, and thus precludes an evaluation of the level of sophistication of such works and a comparison of their level with that of the English literature for which an American college aspirant is responsible.

Comparison of the Examination Review Outlines for 1978 and 1959

The 1959 outline requires that the examinee be able to read, analyze, and translate into modern Chinese specified literary works listed in the document; those works might be considered to be on a par with American high school level readings from Shakespeare and O'Neill--i.e., the sorts of things found on college entrance English examinations in this country. In the 1978 outline, however, one is given no hint as to what kinds of classical Chinese the examinee must be able to handle. Since the absence of specified examples probably conceals a lowered expectation, one might surmise that the level expected of examinees in classical Chinese in 1959 was higher than it was in 1978, but there is no direct evidence to that effect. Nonetheless, it seems very interesting that passive knowledge of classical Chinese is specifically retained, and that in addition to language skills *per se* involving classical Chinese, some general cultural knowledge is also required concerning the historical backgrounds of classical writers.

The inference about a "lowered expectation," it should be noted, refers only to the ability to *read* classical Chinese. In neither 1959 or 1978 was the student expected to prepare for a demonstration of the ability to *write* a composition in classical Chinese; composition in classical style apparently has long ceased to be a required skill. With regard to skills in writing modern Chinese, the lack of precise standards in composition is apparent in both review guides. But the 1959 outline explicitly states that examinees must be able to translate classical into modern colloquial and must know the modern functional equivalents of classical function words ("particles"). This all suggests more rigorous standards in composition in 1959 than in 1978.

The 1959 outline is more explicitly demanding in spelling out more kinds of requirements in greater detail. The 1978 study guide seems to allow more latitude in constructing the examination and in judging it than does the more detailed 1959 outline.

Throughout both the 1959 and the 1978 outlines there is emphasis on clarity of thinking and the ability to analyze both the content and structure of all kinds of non-artistic as well as belletristic writing. In general, the 1959 outline is more political (in demanding understanding of the "thought" conveyed by the authors of the 18 selected writings specified for review, 13 of which had direct contemporary political relevance in 1959). The 1959 guide thus suggests that analytical skills should be focused on the ability to recognize or to make correct political judgments. It is only by the absence of specific demands in relation to particular reading materials that the political element seems to be sharply lessened by 1978. It might be unwise, however, to draw overly firm conclusions from that observation without seeing the actual examination and perhaps without knowing precisely how it was graded. The question remains: How free did examinees feel during the summer of 1978 to be apolitical in a situation of this kind, after having been taught through most of their lives that one was to be graded first and foremost on "correct political attitude"?

3. MATHEMATICS: *by Dr. Frank J. Swetz, Associate Professor of Mathematics and Education, Capitol Campus, The Pennsylvania State University*

Assessment of the 1978 Chinese Materials

An evaluative review of Chinese curricular materials can only be fully relevant if the judgments rendered are based upon what the Chinese themselves see as the broad goals for education. "Just what do the Chinese wish to accomplish in education?" and "What do they want their young people to be able to do with the knowledge they learn in school?" Ideally, firm answers to these questions would establish the key criteria on which evaluative judgments should be made. However, lacking such clear guidelines, a foreign evaluator is forced to seek other reliable criteria upon which objective, informative, and meaningful assessments can be made. Since an acknowledged national goal of the present Chinese Government is to transform the nation into a modern industrialized state by the year 2000, this goal can serve as a general basis for curriculum judgments. The following comments will, therefore, be based on existing mathematics curriculums and standards for modern industrialized nations.

The mathematical material in the *Review Outline* is divided into three areas of concern: Algebra, geometry, and trigonometry. Geometry encompasses both plane and solid Euclidean geometry as well as coordinate or analytic geometry. The scope of the material is broad and presents the basic topics one might expect to find in a quality secondary level mathematics program. Mathematical objectives listed under each subheading are written in behavioral terms in accordance with modern practices. The hierarchy of concepts, techniques, and principles to be learned seems well organized and presents a rather unified approach to mathematics teaching.

In general, the tone of the outline, however, appears classical in its conception and more representative of a program of mathematical studies of 20 or 30 years ago than of a contemporary one. The implied learning emphasis is on achieving computational and technical proficiency; for example, students are expected to be able to extract the numerical square root of a given number and undertake various geometric constructions, practices that are no longer fashionable or considered necessary in modern school programs.

This curriculum itself, as outlined, reflects almost none of the reforms of the "modern math" movement. No mention is made of sets or set concepts, probability and statistics, or algebraic structures and algebraic properties of various operations. The treatment of geometry is particularly classical, and exhibits no concern with geometric transformations or "motion" geometry. The consideration of trigonometry is generally standard but omits innovations such as a use of vectors and polar coordinates. Particularly strong features of the Chinese curriculum include the recommended exposure to elementary functions, including

exponential and logarithmic functions, and the required survey of plane analytic geometry. While the outline's presentation of topics reflects traditional rather than modern educational thinking, the prescribed program, both in scope and depth, represents a program of strong mathematical preparation and reflects a high expectation of student achievement.[1]

Several other features of the outline convey significant information on the present mathematics education scene in China. Especially interesting in this regard is the outline's introductory statement:

> In view of the practical situation regarding mathematics in various areas of the country, we have not included inverse trigonometric functions, complex numbers, permutations and combinations, parametric equations, and limits for the time being.

This statement indicates that school programs in mathematics are not yet uniform throughout the country and seems to confirm the present Chinese leadership's claim that policies adopted during the Cultural Revolution lowered mathematical standards to a degree. The presumable future addition of the indicated topics will certainly strengthen the mathematics program. It is also significant to note that the contents of the outline do not seem to reflect any of the positive reforms stemming from the Cultural Revolution. For example, one reform widely proclaimed during the Cultural Revolution was the "open door policy" under which students and teachers would travel to communes and factories collecting practical proletarian mathematics problems that would later become the object of classroom study, and knowledgeable peasants and workers would come to the classroom to teach the practical mathematics they used in their daily lives.[2] Despite the fact that this approach was emphasized over a quite prolonged period, the 1978 outline devotes little attention to the applications of mathematics or methods of mathematica approximation useful in daily life.

While the *Review Outline* delineates mathematical objectives rather broadly, the examination itself translates these objectives into operational terms--particular mathematical problems to be solved--and thus

---

[1] A current movement in educational planning for mathematics programs is away from the "modern math" trends and toward a "back-to-basics" approach stressing fundamental topics in mathematics. In this respect, the Chinese curriculum might be considered in accord with contemporary educational trends.

[2] For a detailed discussion of the "open door" movement in Chinese mathematics education, see Frank Swetz, "The 'Open-Door' Policy and the Reform of Mathematics Education in the People's Republic of China," *Educational Studies in Mathematics* (1977) 8:461-478.

presents very specific illustrations of the level of knowledge and proficiency expected of a prospective university candidate. The 2-hour examination, consisting of seven exercises (five of which are to be completed by liberal arts candidates, and six by prospective science and engineering majors), is rigorous by most existing standards. The requirements of the examination reflect the contents and emphasis of the *Review Outline* quite closely. The topics considered are traditional in their nature, and the questions test the student's command of theoretical knowledge rather than the ability to use that knowledge in solving applied problems. The test stresses formula recall and manipulation, computational proficiency, and, to a lesser degree, the student's powers of abstraction and generalization.[3] Specific questions probe a rather narrow range of knowledge and do not necessarily allow for a display of creative problem-solving ability--i.e., problems do not appear open-ended, allowing for the use of flexible solution strategies. (For this reason, perusal of several examples of such an examination would enable a candidate to categorize the problems and could encourage the practice of preparing for the test by doing many typical problems.) Basically, the examination is a power test with successive problems becoming more difficult. Question I is a survey question requiring little skill for its successful completion. The most difficult exercises are given in question VII, required only of candidates for science and mathematics specializations. The solution of this problem demands a recall and correct use of several formulas and an application of both analytic and synthetic thinking.

From the scope of the material, depth of knowledge required, and allowable time limit, this examination appears to represent a highly competitive testing situation, one in which the selective standards of student recruitment are very high. The mathematical requirement confronted by a candidate for a liberal arts specialization is especially rigorous in relation to comparable requirements in many other countries.

Considering the contents of the *Review Outline* in conjunction with the actual examination, the conclusion can be reached that mere proficiency with regard to the mathematical topics covered in the outline would not necessarily be sufficient, in itself, to pass the examination. The demands of the entrance examination process would seem to encourage self-study and involvement in extracurricular mathematics problem-solving activities.

In comparing the level of mathematical knowledge required for college entrance in China and the United States, one must keep in mind that this country has a large number and variety of colleges and universities,

---

[3] The organizational format and content of this examination are similar to that of university entrance examinations in China two decades ago. An example of such an examination used in 1957 is given in Frank Swetz, *Mathematics Education in China: Its Growth and Development* (Cambridge, Mass.: The MIT Press, 1974), p. 347.

whereas China has limited facilities in higher education. As a result of these circumstances, the competition for college acceptance in the People's Republic is very much greater than the competition here, and entrance standards in China are, therefore, quite stringent.

The Chinese college entrance examination in mathematics assumes that all students in a particular secondary school take the same mathematics program, regardless of their ability, interests, or vocational aspirations. In the United States, it is possible for a student to take only a minimum mathematics offering in his secondary school, usually a course in general mathematics that satisfies almost none of the Chinese requirements, and still obtain acceptance to a college or university. However, in the majority of cases, students in America aspiring to university acceptance will enroll in a college-preparatory program of study. The mathematics section of such a program will include studies in algebra, Euclidean geometry, and trigonometry very similar to the Chinese requirements. Students with a special interest in mathematics may undertake further mathematical studies through Honors work[4] or Advanced Placement courses. The Advanced Placement studies, which are designed to enable a secondary student to complete a year and a half of college mathematics, will include work with elementary functions, analytic geometry, and concepts of calculus. While American students in a college preparatory program will receive training in most of the areas indicated in the Chinese *Review Outline*, the depth and emphasis in their instruction will differ from the Chinese requirements. The mathematical training of American students will be broader, including work with set theoretic concepts, elementary notions of logic and formal deductive systems, algebraic structures and elementary probability and descriptive statistics, and will focus on the continuity of mathematical ideas and problem-solving techniques. A Chinese student would probably have a stronger knowledge of elementary functions and analytic geometry than his American counterpart; however, such an advantage would disappear if the American student had completed an Advanced Placement course.

The philosophies underlying both the teaching of mathematics and the selecting and evaluating of students for admission to higher education differ dramatically between the two countries. University entrance examinations in the United States reflect a broader approach to the acquisition of knowledge and allow for its demonstration. While there is no national entrance examination in the United States, tests designed by the College Entrance Examination Board (CEEB), a private organization, are used by many

---

[4] A program of Honors studies is not available in all secondary schools in the United States. In schools where such programs exist, the particular studies offered usually reflect the interests and abilities of the school's mathematics teachers. Typical topics considered in such programs might include matrix algebra, probability and statistics, introduction to computers, or the history of mathematics.

universities to screen their applicants. Examinations in mathematics are included in the CEEB's Scholastic Aptitude Test (SAT). The objectives and organization of the SAT mathematics examination underline the differences and varying expectations involved in Chinese and American secondary mathematics teaching. The SAT 75-minute mathematics examination consists of 60 brief problems concerning the application of algebraic, arithmetic, geometric and graphical techniques, and focuses on the student's ability to apply knowledge in unfamiliar problem situations and to think logically rather than merely to recall facts or formulas.

Comparison of the Examination Review Outlines for 1978 and 1959

A comparison of the review materials from 1959 and 1978 reveals that the high learning emphasis on formula recall and computational proficiency is common to both. These goals are clearly spelled out in the prefacing remarks to the 1959 outline where students are urged to be able to prove theorems and derive formulas. The nationalistic theme, "Know the contributions of the motherland's people and mathematicians", is woven into the 1959 objectives for mathematics learning, and the 1959 outline includes a comment on the importance of mathematical applications: "[Know] the significance of mathematics for natural science and industrial and agricultural production.' These themes are not present in the 1978 outline.

The 1959 outline encompasses the subheadings of Arithmetic and Algebra, Geometry and Trigonometry. In its description of mathematics topics, the 1959 outline is both more specific and more comprehensive than its 1978 counterpart. The heavy emphasis on classical Euclidean geometry found in the 1978 document is also apparent in the 1959 material, but, despite the excessive stress in this area, the contents of the 1959 outline reflect a strong secondary mathematics program, one that would be judged of high quality by 1959 standards.

A comparison of the two outlines' contents reveals that two major reforms have taken place in Chinese mathematics education between 1959 and 1978. Arithmetic was dropped from secondary school requirements and analytic geometry was added, greatly raising the level of studies. These reforms to upgrade the level of secondary school mathematics parallel changes taking place outside of China during that period, and although these Chinese reforms lacked some of the "modern trappings" of Western reforms, such as a stress on terminology and axiomatics, they were solid in their conception.

4. PHYSICS: *by Dr. John W. Layman, Associate Professor of Physics and Science Education, University of Maryland*

Assessment of the 1978 Chinese Materials

The general introductory comments in the physics section of the *Review Outline* parallel nicely the general goals of high school physics teaching in the United States. In this country we often speak of the process of physical change, the learning of general concepts in physics, and the understanding of instruments and their role in measurements. We also emphasize formulas, the units associated with them, and the appropriate conditions for their use. The thing that is missing from the Chinese document is evidence of the procedures used in the classroom to implement these general objectives. Only a visit to classrooms can reveal that.

The range of topics included in the outline parallels closely that of topics found in an American introductory high school physics text. However, physics can, unfortunately, be so concisely stated in terms of its laws and equations that it is hard to judge, from material such as that in the outline, the depth of coverage, the kinds of problems worked by the students, whether there is an attempt to illustrate the laws with everyday examples, and how dependent the physics is on the student's mathematical prowess.

The mechanics portion of the *Review Outline* begins with the study of forces, whereas in this country we might begin with kinematics and later tackle Newton's Laws and the rest of dynamics. Under oscillations and waves the Chinese include resonance, a topic not often covered in this country. In an American program the oscillations and waves section might be bolstered through a study of sound, if not through a study of optics.

In the optics portion of the Chinese document the work is confined to elementary single lens geometrical optics, with no apparent tie-in with the waves and oscillations section. In this country, through the influence of the Physical Sciences Study Committee (PSSC) physics course, much more would be done with the particle and wave model of light and the role played by interference and diffraction in the study of optics.

The atomic and nuclear physics portion is somewhat more brief than in American texts, but often our own teachers, who may be pressed for time at the end of the year, do not do much with this topic either.

There is no reference to relativity, again a topic not always covered in this country.

In all other respects, the range of topics in the outline parallels that found in the average American high school physics text, although in a rather classical mold. There is little evidence of the inclusion of exotic topics such as magnetohydrodynamics, solid state physics, space travel, or lasers and holography.

On the question of mathematical sophistication, careful reading of both the *Review Outline* and the examination itself shows that only algebra and trigonometry are required and that vectors and graphs are used. One can not tell for sure what the examiners would accept as a suitable level of mathematical response, but it would appear that the expectations match those of high school teachers in this country.

A major item missing from both the *Review Outline* and the examination text is any clear indication of the role of laboratory work in the study of physics. An introductory comment in the physics part of the outline (item 2) suggests that the student "should understand the main purpose and correct use of relevant instruments in physics experiments," but there is no other indication of what physics topics are supported by laboratory work. In this country laboratory work is an integral part of a physics course. I suspect from the examination that laboratory work is done by the Chinese student, but one can not tell how much. In our country the amount varies with the interests of the teacher, but it is often a major part of a physics course.

In the introduction to the actual examination, the student is told to show all formulas, important steps in mathematical computations, and all written explanations used in solving the questions or problems. No credit will be awarded for only final answers without the proper intermediate work being shown. All figures, equations, and units used must be shown. Again, this parallels the instructions that would be given students in this country, especially on an examination to be scored by someone other than the classroom teacher.

A disproportionate portion of the examination was devoted to topics in electricity and magnetism (47 out of 100 points), but the rest of the questions and problems were distributed evenly among the remaining topics.

I would characterize the examination as comparable in level and style to a final exam in one of our standard high school introductory physics courses.

In our larger high schools it is not uncommon to have a second-year physics course, an Advanced Placement course in physics, or a combination chemistry/physics second-level course. Students in these courses would be working at a much higher level than is indicated in these Chinese documents. These students might be using calculus, doing more advanced laboratory experiments, and in effect doing their first-year college physics while in high school.

Comparison of the Examination Review Outlines for 1978 and 1959

When compared with the 1959 document, the 1978 *Review Outline* exhibits a higher degree of educational and scientific sophistication, but a reduction in the number of topics covered.

The 1978 outline includes a nicely presented set of introductory points for the guidance of the examinee, which in our country would be characterized as general objectives. It is also more systematically organized. The main topical categories (which in the 1959 outline were given as mechanics, molecular physics and heat, electricity, light, and atomic structure) have generally been broken down into clear subdivisions in the 1978 document. Mechanics, for example, is subdivided into force, equilibrium of matter, kinematics, kinetics, work and energy, curvilinear motion, oscillations and waves, and fluid statics. The order of presentation of topics in the 1978 outline is from the simple to the more complex, with fewer references to technological applications than in the 1959 document. The 1978 outline contains the actual equations to be studied rather than just clusters of physics terms, which gives it a much more sophisticated air.

The 1959 outline reads more like a physical science outline than its 1978 counterpart, with its objective seemingly being coverage of all possible topics. Among the topics included in the 1959 document but omitted in the 1978 outline are sound, pressure in moving fluids, surface tension, wetting, capillarity, Brownian motion, diffusion, humidity, total reflection, interference of light, the eye, optical instruments, electrically controlled commutato and long distance transmission of electricity. There is also a reduction of breadth in the 1978 outline in the areas of heat, fluid dynamics, electricity, and optics. Due to this reduction in the number of topics, the 1978 outline could be interpreted as simpler than the one for 1959.

To summarize, the omission of many topics in the 1978 *Review Outline* suggests a narrowing of the coverage of secondary school physics over the last two decades, but other features of the 1978 document--such as the listing of more specific objectives, the delineation of much clearer subtopics, and the explicit addition of the equations to be mastered--suggest a sharper and deeper focus on the more fundamental aspects of physics, much in the vein of the PSSC effort in the United States.

5. CHEMISTRY: *by Dr. Marjorie Gardner, Professor of Chemistry and Science Education, University of Maryland*

Assessment of the 1978 Chinese Materials

The 1978 *Review Outline* and examination in chemistry are both free of politics. Chemistry seems to be taught, or at least tested, as an apolitical subject. The level of content and level of sophistication in the subject are close to those found in high schools in the United States in the 1940's and 1950's.

The content of the outline is traditional and mostly descriptive chemistry. There is no mention of the mole, the cornerstone of modern secondary school chemistry courses. Some of the terminology used (e.g., gram molecule and gram atom in place of the mole concept; lazy elements in place of noble gases; and classifying reactions as combination, decomposition, displacement, and double displacement) is reminiscent of American textbooks of at least 20 years ago.

The laboratory work (basic empirical skills) mentioned in the *Review Outline* is very different from that done in American schools today in at least two respects: (1) The equipment used; and (2) the experiments performed. For example, in Chinese schools alcohol burners are used as heat sources and tray scales are used for weighing. Both of these items of equipment are used to some extent in junior high schools in the United States but have been replaced in most senior high schools by bunsen burners and electronic balances. The experiments performed in China consist of preparation of gases, dilution of concentrated H_2SO_4, and qualitative analysis procedures. Generation of gases and H_2SO_4 dilution experiments have generally disappeared from American schools, largely for safety reasons. They are sometimes demonstrated at the junior high level to help students become acquainted with physical and chemical properties. Qualitative analysis schemes are done in some American high schools, most often near the end of the year as an interest-capturing elective if the teacher is especially interested in this aspect of chemistry.

In the Chinese *Review Outline*, attention is given to applied chemistry through study of the industrial preparation and uses of sulfuric acid, caustic soda, and chemical fertilizers. This type of chemistry was common in U.S. textbooks prior to 1960, but little of it is present now as industrial chemistry. There is some attention to these chemicals in American textbooks, but mostly in the context of consumer chemistry and social relevance. In fact, the China syllabus appears to represent career-oriented chemistry for prospective chemists or other scientists, and to be geared to university preparation. American high school chemistry, on the other hand, (except Advanced Placement, which is definitely a university preparation course) is basically directed toward serving general education goals.

The *Review Outline* indicates more attention to organic chemistry than is typical of American high school chemistry. In the United States, organic chemistry is an elective part of the course and is not taught at all in many schools.

The level of the China syllabus appears to be somewhere between that of a junior high physical science course and a senior high conventional 11th-grade chemistry course in the United States. It is considerably below the level of the Chemical Education Materials Study (CHEMS) and the Advanced Placement courses. The level of mathematics and modern theory (e.g., atomic and molecular structured bonding, equilibrium, kinetics) reflected in the outline is distinctly below that taught in the majority of chemistry courses in American high schools.

The 1978 examination in chemistry very closely parallels the *Review Outline*; there are no surprises. Some of the answers could be drawn from memory, but some questions require alertness, thinking, and explanation. Two of the six sections, approximately one-third of the examination, deal with laboratory experiments that are described in words and drawings. There is one section on organic chemistry and the three remaining sections ask questions that could generally be classified as descriptive, inorganic chemistry.

One may conclude from the indications in these Chinese materials that as of 1978 a secondary school graduate from the People's Republic of China would not have as strong a background in modern chemistry, laboratory work, and calculations as a representative American counterpart. However, it should be added that (1) background deficiencies can be rapidly erased by an intelligent, dedicated student; and (2) with schools returning to normal and new textbooks becoming available, the chemistry backgrounds of future Chinese graduates should be strengthened very rapidly.

Comparison of the Examination Review Outlines for 1978 and 1959

The first apparent difference between the two outlines is in length and detail. The 1978 outline is four pages long while the 1959 document is nearly double that length (seven pages). In 1978, five general areas were stated as required; in 1959, there were eight such areas:

1978 requirements	1959 requirements
1. Basic principles and concepts	1. Basic ideas and laws
2. Basic calculations	2. Nomenclature
3. Common elements and compounds--their nature, manufacture, and applications	3. Properties, manufacture, and use of some important substances

4. Basic laboratory operations

5. Basic knowledge of organic chemistry

4. How to write formulas and equations and use them in basic calculations

5. Periodic law and table; atomic and ionic theory

6. Properties and structure of organic compounds

7. Principles and processes of production of materials important in the national economy, as well as their role in socialist construction

8. Basic processes of chemical experiments

Not only is the 1959 outline longer and broader in coverage; it appears also to be more sophisticated in content and level. Laws, principles, and theories are more prominent. Periodicity is carried much further. Isotopes are introduced. Hydrogen, oxygen, nitrogen, iron, aluminum, and water are covered separately, as are the main groups of representative elements in the periodic table.

The 1959 outline is very similar (except for the stress on organic chemistry) to tables of contents in 1950-vintage American high school chemistry textbooks. The coverage of content and level of sophistication in the 1959 document are both clearly above that of the 1978 outline. This comparison indicates that students in Chinese secondary schools have had much less time and opportunity for the study of chemistry and have covered the subject in less breadth and depth in recent years than they did two decades ago.

6. HISTORY: *by Dr. Chang-tu Hu, Professor of History and Education, Teachers College, Columbia University*

Assessment of the 1978 Chinese Materials

The coverage in the *Review Outline* for the 1978 examination, both in terms of time span and subject areas, is broad indeed. After an opening reference to the prehistoric "Peking Man," the outline continues with the earliest of recorded Chinese history and concludes with the founding of the PRC in the case of Chinese history and the end of World War II in the case of world history. The material is very systematically organized. In chronological terms, there is complete "beginning to end" coverage of Chinese history, with no major phase or periods left out. At the same time, it is too obvious to require much elaboration that the teaching of history in secondary schools follows the Communist Party policy of *hou-chin po-ku* (stressing the recent and deemphasizing the remote past) for the purpose of *ku wei chin yung* (making the past serve the present). For the three major early periods of primitive, slave-owning, and feudal societies in Chinese history, there are altogether only 50 or so separately mentioned topics, while the modern and contemporary periods, though incomparably shorter in time span, seem to require considerably greater attention and knowledge of details, judging by the large number of topics and personalities specifically mentioned. With regard to world history, the outline covers *only* the modern and contemporary periods (beginning with 1640) and is relatively brief, listing some 40 topics.

The outline's depth is much more difficult to assess. The manner of its organization and presentation gives no clear clue to the depth in which the examinees are expected to be able to discuss the various topics. However, my examination of a more detailed current review and reference guidebook--*Li-shih chih-shih wen-ta* (Questions and Answers on Historical Knowledge), published in Peking in 1978--suggests that the intended depth of knowledge is generally adequate in broad terms, although here again one can readily see the differences in stress between the treatment of the *ku* (old) and *chin* (new) aspects of history.

In Chinese schools, history is one of the subjects very closely identified with what is loosely termed "politics," and it has therefore been taught largely for purposes of political education. Through the study of history, students are expected to develop a socialist world outlook based on an understanding of dialectical materialism and historical materialism. It is quite obvious that the material in the *Review Outline*, as in the classroom, is organized according to a set of Party-approved and academically orthodox principles, which include the following:

1. The principle of a standardized historical periodization scheme. This requires strict compliance with the Marxist division of human history into primitive commune, slave-owning society, feudalism, capitalism, socialism, and ultimately communism.

2. The principle of the dominant role of the "people" in history--i.e., that common people have been the true makers of history. This principle demands that traditional Chinese historiography, which treats history as the annals of emperors, kings, generals, and prime ministers, must be discarded in favor of a new approach.

3. The principle of the great historical significance of mass and popular movements. In line with this principle, such movements are treated as *revolutions* rather than merely revolts or rebellions.

4. The principle of patriotism. This is primarily reflected in the emphasis given to the scientific and technological accomplishments of outstanding Chinese scholars and craftsmen of the past. It is also to be found in the treatment of topics related to Western and Japanese incursion into China in modern times.

The material in the outline is so organized as to conform to a formula in respect to both coverage and interpretation. In this sense, the outline represents a new approach to the study of Chinese and world history as compared to that used in pre-Communist days. There is emphasis on heuristic teaching, and students are encouraged to observe and analyze according to the laws of dialectics. Without adequate factual data on teacher preparation and concrete classroom learning conditions, it is difficult to even hazard a guess as to the effectiveness of such an approach in the study of history. Since historical materialism is believed to have the intrinsic value of being "scientific," all other schools of thought concerning the study and interpretation of history, both old and new, have been denigrated as "metaphysical" and excluded from the teaching/learning process.

A perusal of the test in history included in the actual examination reveals that it, like the *Review Outline*, focuses heavily on *Chinese* history, and particularly on *modern* Chinese history. Of the total of 100 points on the test, about 75 points (or 75 percent) are allotted to questions dealing with Chinese history, while only about 25 points (25 percent) are assigned to questions on world history. Furthermore, within the confines of the questions on Chinese history, queries related to the *modern* period in Chinese history (roughly after 1840) account for about 50 points (approximately two-thirds of the points allotted for Chinese history, and about one-half of the total points on the whole test). The ideological or political emphasis is clear throughout the test. It is reflected in the stress on such major themes as (1) the "centrality" of the role of the common people in human history, (2) the long world-wide tradition of popular rebellion against oppressive rulers and class enemies, (3) China's historical heritage as a multinational state, (4) China's earlier great achievements and its later degradation as a semi-feudal and semi-colonial society, (5) the glorious revolution under the leadership of the Communist Party, and (6) the historical significance of the rise of Marxism and Communism for the world at large.

Although the 1978 Chinese *Review Outline* and examination provide only a tentative basis for comparing the level of knowledge in the field of history required of college entrants in China and the United States, some assessment may be attempted of the extent to which Chinese and American secondary school graduates are expected to understand (1) their own national history and (2) the history of the modern world. At the risk of being speculative, it may be suggested that the "average" Chinese middle school graduates perhaps have a better understanding or familiarity with their national history than their counterparts in the United States. This is due to the emphasis placed on Chinese history since the Communists came to power. But precisely because of this emphasis, the history of the modern world has been neglected in Chinese schools, and, when it is taught, it is treated only to the extent of supplementing ideological indoctrination, stressing such themes as the rapaciousness of capitalism and the struggle of the proletariat and emphasizing events such as the Paris Commune and the October Revolution of 1917. Students in American high schools seem to acquire broader knowledge of world history, largely because of more comprehensive coverage in the school curriculum, presumably better trained teachers, and much better access to a larger variety of supplementary reading materials.

Comparison of the Examination Review Outlines for 1978 and 1959

By any standard of comparison, the 1959 examination outline is far superior to the one for 1978 in coverage, articulation, and scholarship. The earlier tradition of historical scholarship is much more in evidence in the 1959 document than in the 1978 outline, which is, in some respects, no more than a condensation of the earlier version. The current outline covers only approximately two-thirds of the topics covered in the 1959 outline. Moreover, some of the ideologically inspired concepts and approaches are less obvious in the 1959 document; for example, the periodization scheme is not openly applied.

Although much would depend on the level of performance expected of students in an examination situation, irrespective of the manner in which the outline is presented, a comparison between these two outlines nevertheless clearly suggests that in 1959 students were required to possess a broader and more "scholastic" knowledge of history, both ancient and recent, Chinese and foreign. I am strongly of the view that the noticeably lower requirements in the subject of history in 1978, as compared to 1959, are attributable to the decade-long disruption of teaching, the overemphasis upon politics and political activism, and the very unhealthy climate of anti-intellectualism that prevailed in the wake of the Cultural Revolution.

7. GEOGRAPHY: *by Dr. Clifton W. Pannell, Associate Professor of Geography, University of Georgia*

Assessment of the 1978 Chinese Materials

The geography portion of the 1978 *Review Outline* indicates three main topical areas of concentration for which China's secondary school graduates are responsible. These three areas are the following:

(1) A basic knowledge of earth science. This includes the earth's position in the universe; the geographic coordinate system of latitude and longitude; earth-sun relations, seasonal changes, main climatic factors, and physical features; the interior structure of the earth; and a basic understanding of the properties of maps, especially those that depict physical patterns.

(2) A broad knowledge of the geography of China. This includes China's location and its neighbors; major administrative units; main patterns of physical geography (major landforms, basic climate patterns, soils, major rivers, lakes, and water resources); and the distribution and nature of China's population. In addition a knowledge of China's main regions is required, with emphasis on their physical and resource characteristics and the resulting role of these regions in primary and secondary economic production within the national economic system.

(3) A basic knowledge of world geography. This stresses primarily physical geography and the resource patterns that result from physical conditions and territorial size. Consideration is also given to the economic geography of major countries and, to a lesser extent, to the political geography of the globe.

Requiring such knowledge suggests that geographic training and education is more intensive and thorough at the secondary school level in China than it is in the United States. Also the Chinese geography program, although including human geography, appears to place much heavier emphasis on physical geography and basic earth science than do geography programs in the United States.

To the extent that geography is taught in U.S. high schools (a 1971 study estimated that only about 10 percent of American students in the public institutions take geography courses), it is generally taught as a social studies subject and focuses heavily on human geography, although it may also include material on human interactions with the physical environment. Earth science in the United States is taught separately from geography and is generally offered at the 8th- or 9th-grade level. Such courses reach approximately two-thirds of U.S. public school students. In general these earth science courses cover the same basic material as

is indicated in the earth science portion of the Chinese *Review Outline*, although the U.S. courses also cover basic oceanography.

It should be noted that in Chinese secondary schools the study of geography, as the outline indicates, is also used as a political tool to reinforce Marxist perspectives on the global economic system. This is apparently done primarily in the study of world geography, where foreign countries are characterized in terms of their economic systems or past roles in a colonial/imperial system. Thus, the United States is identified as a highly developed imperialist and monopoly capitalist state, whereas France is seen as a "progressive capitalist industrial state."

Comparison of the Examination Review Outlines for 1978 and 1959

Geographic education in Chinese secondary schools has apparently changed its direction during the last two decades. In 1959 the geography outline focused mainly on the economic geography of China, with consideration also given to regionalization. China's regions were then studied as economic/production regions, although some attention was given to the physical conditions and resource patterns of these regions.

In the 1978 outline much more emphasis is placed on physical geography as a systematic topic. Specific regional applications are studied, but apparently with a holistic view of regions as parts of a larger environmental framework. The goal of current study appears to be preparing students to play a greater role in promoting production through better understanding and knowledge of China's physical environments, patterns of resources, and population distribution. This goal is consistent with recent information about the important position geography has established for itself within the context of Chinese science. In the various research institutes under the Chinese Academy of Science and in university departments, geography has placed heavy emphasis on the study of the physical environment. Its ~~role~~ is thus that of an environmental science and an applied discipline that is justified in large part on the basis of its ability to help increase agricultural production through promoting better human understanding and utilization of available physical resources, such as land and water. Although other geographic work is focused on industrial location, transportation, and urban planning, the main thrust of the discipline probably will remain on environmental analysis, looking toward increasing agricultural production.

China's changing relationship with the U.S.S.R. is also reflected in the two examination outlines. For example, the Soviet Union received heavy positive attention in the 1959 document. In the 1978 outline, the U.S.S.R. is identified as a "traditional European state" and a "social imperialist state" and is included only as a small part of the section on Europe. Overall, the 1978 *Review Outline* indicates that geography continues to be used as a vehicle for political propaganda and conditioning. Such use, however, appears to have been reduced since 1959.

8. FOREIGN LANGUAGE (ENGLISH): *by Dr. Timothy Light, Professor of Chinese Language and Linguistics, University of Arizona*

Assessment of the 1978 Chinese Materials

The general requirements for foreign language as stated in the *Review Outline* read for the most part like descriptions of basic requirements for students who have completed 2 years of high school foreign language study in the United States. Actually, at least theoretically, the vocabulary required (600 to 800 words) is a bit below what can be expected of a student who has had 2 years of one of our commonly taught foreign languages.

However, the outline's requirements for review of English grammar *imply* a stage of linguistic sophistication considerably beyond what can be expected of American high school students who have taken 2 years of such languages as French, German, or Spanish, for what the examiners have picked to stress are largely those features of English that are difficult for Chinese to master because they involve construction types that either are not found in the Chinese language or are formed very differently in Chinese. This suggests that what in English is formed with construction types similar (or seen to be similar) to those encountered in Chinese is *presumed* to be known.

Furthermore, many of the items for review involve not sentential construction, but discourse construction. That is, although one needs to know the formation of simple sentences well in order to make sentences with "and" and "but" conjunctions or "if" and "when" conditionals, and other complex sentences, merely knowing the simple structure in each case is not sufficient to guarantee correct usage. The context of previous utterances (and in some cases, following utterances) and the context of the speech situation all play an important part in determining the correct use of many of the constructions mentioned in the *Review Outline*. The ability to use such items in their correct contexts involves an ability to use the language for complex purposes and an ability to handle long stretches of speech--things not normally demanded of students in the first or second year of American high school foreign language classes.

In short, the outline presumes a mastery of elementary English and suggests that a command of items reflecting an intermediate or advanced level will be tested on the examination.

The actual examination in English is a mixed bag. It is clearly based on an attempt to stress those constructions that students who natively speak Chinese will have difficulty mastering in English. It thus reflects an intuitive contrastive analysis, most likely based on the experience of many teachers in many years of teaching. To this reviewer, most of the questions and the choices presented in them are eminently sensible and accurately predict and reflect areas of difficulty for Chinese speakers learning English. However, not all of the questions test distinctions between acceptable and unacceptable English. In question I.4., for

example, all the available answers are acceptably used by native English speakers. Question I.15. presents two acceptable answers and a third one which is rather less likely to be chosen, even by those with rather weak English. Question I.26., in contrast, provides no correct answers. Despite such lapses, however, *internally* the test seems likely to distinguish proficient students from incompetent ones because of the emphasis on such things as prepositions, articles, superlatives, verb tenses, interrogative word order, and passivization--all examples of items where Chinese construction differs radically from English construction.

What is *not* tested in the examination is also important to note. The exam tests the skills of grammar selection, reading comprehension, and translation. It does not test oral skills or the skill of writing original material (i.e., material that is not based on translation). The lack of specific testing for these skills is partly made up for by a known correlation between success on a fill-in-the-blank type of grammar selection test (such as question I on the examination) and other skills. Nonetheless, anyone evaluating the examination for academic purposes would rest more easily if the two skills most necessary to academic success aside from reading--namely, oral/aural skills and original writing--were directly tested.

The system for scoring the examination warrants some comment. In question VI, 10 points are allotted for translating a fairly difficult English paragraph in which the possible pitfalls are many; in consequence, this question seems that it would require substantial effort compared with all others. With the exception of question VI, there appears to be a fairly equitable distribution of points according to predictable effort for each of the main question sections. But relative effort on a test has no necessary connection with relative proficiency in language. Question V is also particularly worrying for another reason. Here 20 percent of the exam score rests on four queries, each of which has four possible alternative answers. In a tight field of competitors, it would be very possible to come out very well or very badly on the exam solely because of performance on this question, and either one of these results would be possible quite regardless of an individual's reading comprehension skills.

Ultimately, the value of this examination to us in America is the use it has in distinguishing very able students from those who are less able, so that we can estimate the difficulty individual prospective Chinese students will encounter in handling academic work presented in English. In order to help assess what the test results might mean in this regard, I showed the English test to a teacher of college Spanish and to both the director and the examination specialist of our university's Center for English as a Second Language. The Spanish teacher, who was viewing the examination as though it were a Spanish exam for American students, felt that a student who did very well (70 percent or above) on the test would have to have had at least 4 years of high school foreign language or 2 years of college instruction. The Teaching English as a Foreign Language (TEFL) specialists felt that the examination could clearly

distinguish the very good from the very weak students.. They also stated that a candidate who scored 80 to 100 percent would have to be very good and would probably be considered as being at the intermediate-advanced level (i.e., in need of only finishing-off training in a TEFL center before beginning college work in English). Because Spanish is a cognate language to English, and because the TEFL specialists fully appreciate the standards in English that are needed by foreign students whose native language is not English, I take these two assessments to have about the same meaning, and I agree with both of them.

In conclusion, one should note that the implication for any evaluator is that a very high score or a very low score on this English test will be indicative of ability. But the middle scores--which will be most of the scores--will not be very discriminating. Hence, it appears that this test cannot be relied on for much more than major groupings, and consequently that standard tests and diagnostic tests will still be required for any Chinese who come to the United States to study.

Comparison of the Examination Review Outlines for 1978 and 1959

Educators in China consistently insist that standards in all subjects are lower now than they were 20 years ago because of the damaging effects of the Cultural Revolution. A rudimentary comparison of the English language portions of the 1978 and 1959 outlines would not necessarily suggest such a drop. However, in the vocabulary section, the 1959 requirements suggest a total of 750 to 1000 words and list some very sophisticated words that should be learned. Furthermore, in the 1959 document more stress is placed on the ability to handle accurately the English verb timing system--something that is inherently difficult for native speakers of Chinese, since the Chinese verb system operates very differently.

U.S. GOVERNMENT PRINTING OFFICE