DOCUMENT RESUME

ED 156 877 CE 017 156

AUTHOR Antos, Joseph R.; Mellow, Wesley S.
TITLE The Youth Labor Market: A Dynamic Overview.
INSTITUTION Bureau of Labor Statistics (DOL), Washington, D.C.
SPONS AGENCY Employment and Training Administration (DOL), Washington, D.C.
PUB DATE 15 Feb 78
CONTRACT DL-20-11-76-47
NOTE 219p.; Not available in hard copy because of poor reproducibility
AVAILABLE FROM National Technical Information Service, Springfield, Virginia 22151

EDRS PRICE MF-$0.83 Plus Postage. HC Not Available from EDRS.
DESCRIPTORS *Career Change; Economic Climate; Economic Status; Educational Background; Employment Level; Employment Opportunities; *Employment Patterns; Failure Factors; Human Capital; *Labor Market; Marital Status; Models; Occupational Mobility; Racial Differences; Sex Differences; Success Factors; Underemployed; *Unemployment; *Wages; *Youth Employment; Youth Problems

ABSTRACT

Based on the National Longitudinal Surveys of over 10,000 men and women aged eighteen to twenty-seven who were interviewed annually from 1966 through 1971, this study investigates how the youth labor market operates and identifies its manpower problems that should be addressed by policymakers. A five-part recursive model is established for the youth labor market consisting of labor market status, wage determination, turnover, duration of subsequent unemployment, and wage growth. It is found that (1) the relationship between educational attainment and subsequent labor market success is striking; (2) education has a positive effect on wages; (3) job tenure is a deterrent to turnover, but job change represents a definite attempt to improve economic position; (4) the duration of unemployment and wage growth are directly affected by aggregate economic conditions since any decline disproportionately falls on youth, increasing the duration and decreasing their earning potential; (5) workers generally do not remain in jobs below their capabilities; and (6) competitive forces rule the youth job market with productive capabilities being rewarded and workers who initially earn less than their potential increasing their wages over time. Comparisons are drawn between early market entrants and college-goers, the employed and unemployed, blacks and whites, men and women, married and unmarried workers, and particular occupations. (ELG)

THE YOUTH LABOR MARKET: A DYNAMIC OVERVIEW

by

Joseph R. Antos and Wesley S. Mellow

Office of Research Methods and Standards
U.S. Bureau of Labor Statistics

February 15, 1978

This report was prepared under contract 20-11-76-47 with the Employment and Training Administration, U.S. Department of Labor, under the authority of the Comprehensive Employment and Training Act. Points of view or opinions stated in this document do not necessarily represent the offical position or policy of the Department of Labor.

BIBLIOGRAPHIC DATA SHEET	1. Report No. DLMA-20-11-76-47-1	2.	3. Recipient's Accession No.
4. Title and Subtitle: The Youth Labor Market: A Dynamic Overview			5. Report Date: February 1978
			6.
7. Author(s): Joseph R. Antos and Wesley S. Mellow			8. Performing Organization Rept. No.
9. Performing Organization Name and Address: U.S. Department of Labor, Bureau of Labor Statistics, Office of Research Methods and Standards, 441 G Street, N.W., Washington, D.C. 20212			10. Project/Task/Work Unit No.
			11. Contract/Grant No. DL-20-11-76-47
12. Sponsoring Organization Name and Address: U.S. Department of Labor, Manpower Administration, Office of Research and Development, 601 D Street, N.W., Washington, D.C. 20213			13. Type of Report & Period Covered: Final
			14.

15. Supplementary Notes

16. Abstracts: This study uses six years of data from the National Longitudinal Surveys of young males and females to investigate how young people adapt to the market place. A five component recursive model is sequentially estimated for each age from 18 through 27. The components are: education and labor force status, wage determination, turnover, unemployment duration, and wage growth. Evidence is found that competitive forces operate over the long run in the youth labor market: Productive capabilities are rewarded, and workers initially earning less (more) than their potential move up (down) the wage distribution. Job changing facilitates this equilibration, although turnover among females appears to be less purposeful than for males. We also find that deteriorating aggregate economic conditions severely disrupt the youth labor market, increasing unemployment and depressing wage growth.

17. Key Words and Document Analysis 17a. Descriptors

Earnings
Economic analysis
Economic models
Labor
Manpower utilization
Mathematical models
Mobility
Socioeconomic status
Unemployment
Unionization
Unskilled workers
Upgrading

17b. Identifiers/Open-Ended Terms

Recursive Models
Multinomial Logit
Wages
Human Capital
Youth

17c. COSATI Field/Group: 5c

18. Availability Statement	19. Security Class (This Report)	21. No. of Pages
Distribution is unlimited. Available from National Technical Information Service, Springfield, Va. 22151.	UNCLASSIFIED	199
	20. Security Class (This Page) UNCLASSIFIED	22. Price

FORM NTIS-35 (REV. 3-72) THIS FORM MAY BE REPRODUCED USCOMM-DC 14952-P72

PREFACE

Young people in their late teens and early twenties present some of the most challenging problems for manpower policy. They dart in and out of employment, school, and unemployment; are battered about by the ebb and flow of aggregate economic conditions; and suffer the severe effects of race and sex discrimination. Yet, as youth reach their mid-twenties many of these problems moderate--unemployment rates are substantially lower; average wages, substantially higher. This study uses six years of data from the National Longitudinal Surveys of young men and women to investigate how young people adapt to the market place. We estimate a recursive model of five interrelated activities: school enrollment and labor force status, wage determination, turnover, duration of subsequent unemployment, and wage growth. These topics have for the most part been investigated separately. Linking them together in a unified theoretical framework facilitates a synthesis of past research and provides new insight into some of the complex problems of youth.

A number of people have contributed to this study. Katherine Desmond served as an able research assistant throughout most of the study, from the initial creation of data sets through the writing of the first draft of the report. Her diligent and intelligent handling of data problems and her help in coordinating the many phases of this study are greatly appreciated. Mark Chandler assisted in initial data creation and collaborated on the appendix to Chapter IV. Ollie Ballard served as research assistant

during the closing weeks of study. Elizabeth Neal typed the draft report and much of the final report. Darlene King also typed parts of the final report.

In addition, several people provided helpful comments on an early draft of the study. Sherwin Rosen and Edward Kalachek each thoroughly reviewed the entire draft, and their perceptive comments added measurably to the quality of the final product. Stanley Stephenson, Charles Brown, and Andrew Kohen also provided useful comments on an earlier draft.

This study was undertaken with the encouragement and financial support of the Office of Research and Development, Employment and Training Administration. Ellen Sehgal of ETA offered useful suggestions and encouragement at various times during the study.

All remaining errors and defects are the sole responsibility of the authors.

TABLE OF CONTENTS

		Page
Preface		ii
Chapter I	Introduction	1
	1.1 Model, Data, and Estimating Procedures	1
	1.2 Major Findings	2
	Labor Market Status	
	Wage Determination	
	Turnover	
	Unemployment Duration	
	Wage Change	
Chapter II	A Dynamic Model of the Youth Labor Market	8
	2.1 Data and Model	10
	2.2 Longitudinal Data and Recursive Models	17
	2.3 Plan of the Study	20
	Footnotes	21
Chapter III	Schooling and Labor Market Activities of Youth	27
	3.1 School Enrollment and Labor Market Activities: Tabular Analysis	28
	3.1a Survey Week and Survey Year Activities	28
	3.1b Labor Market Activities of Youth Grouped by Educational Attainment	31
	3.2 School Enrollment and Labor Market Activities: Multivariate Analysis	35
	3.2a Survey Year Results	38
	3.2b Survey Week Results	40
	3.2c Additional Evidence	41
	3.3 Determinants of Educational Attainment	43
	3.3 Conclusions	45
	Footnotes	46
	Appendix Logit Analysis	71

		Page
Chapter IV	Wage Determination: The Impact of Personal Characteristics, Aggregate Economic Conditions and Market Structure	74
	4.1 The Wage Determination Process	75
	4.2 Empirical Findings	79
	4.2a The Impact of Personal Characteristics	80
	4.2b The Impact of Aggregate Economic Conditions	83
	4.2c The Impact of Market Structure	84
	4.3 Further Evidence	85
	4.3a Union Membership and Wage Rates	85
	4.3b Wage Determination for Youths and Adults: A Comparison	
	4.3c Race, Sex, and Wage Growth	86
	4.4 Conclusions	88
	Footnotes	89
	Appendix An Investigation of the Determinants of Sex Differences in Union Membership	106
Chapter V	The Determinants of Job Changing Activity Among Youth	116
	5.1 A Model of Labor Turnover	117
	5.2 The Determinants of Job Turnover	121
	Market Differential	
	Job Tenure	
	Race	
	Education, Marital Status, and Sex	
	Aggregate Economic Conditions	
	5.3 Selectivity Bias and the Draft	126
	5.4 Conclusions	127
	Footnotes	129
Chapter VI	Duration of Unemployment Among Job Changers	142
	6.1 Job Search, Unemployment Duration and Market Equilibration	142
	6.2 Empirical Findings	145
	Market Differential	
	Aggregate Economic Conditions	
	Personal Characteristics	

Page

6.3 The Unemployment Experience: A Long Run Analysis 147
6.4 Conclusions 147
Footnotes 149

Chapter VII Wage Growth: The Acquisition of Productive Skills and Market Equilibration 158

7.1 The Wage Growth Process 158
7.2 Determinants of Wage Growth: Empirical Evidence 161
Market Equilibration
Job Changes and Unemployment Duration
Education, Training, and Work Experience
Aggregate Economic Conditions
7.3 Wage Growth: A Long Run View 167
7.4 Conclusions 168
Footnotes 170

Chapter VIII Conclusions and Policy Implications 177

8.1 Summary of Findings 177
8.2 Policy Implications 179

References 183

TABLES

		Page
2.1	Unemployment Rates by Sex, Age and Race: 1967 and 1975	23
2.2	A Dynamic Model of the Youth Labor Market: The Initial (Age 18-19) Iteration	24
2.3	Sample Distribution by Age and Survey Year for NLS Young Men and Women Data	25
3.1	Activities, Selected Ages	49
3.2	Survey Week Activities by Enrollment Status, Selected Ages	50
3.3	Post-School Activities of Males Grouped by Educational Attainment	51
3.4	Post-School Activities of Females Grouped by Educational Attainment	52
3.5	Mean Wages of Workers Grouped by Educational Attainment	53
3.6	Variables used in Survey Year Activity Analysis: Ages 18, 20, 24	54
3.7	Variables used in Survey Week Activity Analysis: Ages 18, 20, 24	56
3.8	Determinants of Survey Year Activity: Males Ages 18, 20, and 24	58
3.9	Derivatives Evaluated at the Mean: Survey Year Activity, Males, Ages 18, 20, 24	60
3.10	Determinants of Survey Year Activity: Females Ages 18, 20, 24	61
3.11	Derivatives Evaluated at the Mean: Survey Year Activity, Females Ages 18, 20, 24	63
3.12	Determinants of Survey Week Activity: Males Ages 18, 20, 24	64
3.13	Derivatives Evaluated at the Mean: Survey Week Activity, Males Ages 18, 20, 24	66
3.14	Determinants of Survey Week Activity: Females Ages 18, 20, 24	67
3.15	Derivatives Evaluated at the Mean: Survey Week Activity, Females, Ages 18, 20, 24	69
3.16	Regression Estimates of Educational Attainment	70
4.1	Variables Used in Wage Regression	93
4.2	Stage I and Stage II Wage Regressions: Age 18	95

		Page
4.3	Stage I and Stage II Wage Regressions: Age 20	97
4.4	Stage I and Stage II Wage Regressions: Age 24	99
4.5	Stage I and Stage II Wage Regressions: All Ages (1970)	101
A4.1	Mean Values of Independent Variables by Union Membership Status	112
A4.2	Determinants of Union Membership: Stratified by Fulltime and Parttime Workers	113
A4.3	Derivatives Evaluated at the Mean: Union Membership Model Stratified by Fulltime-Parttime Workers	114
A4.4	Linear Regression Estimates of the Sex Differential in Union Memberships	115
5.1	Variables Used in Turnover Analysis	131
5.2	Determinants of Turnover Activity: Age 18, 20, 24 Males	133
5.3	Determinants of Turnover Activity: Age 18, 20, 24 Females	135
5.4	Derivatives Evaluated at the Mean: Turnover Analysis Males Ages 18, 20, 24	137
5.5	Derivatives Evaluated at the Mean: Turnover Analysis Females Ages 18, 20, 24	139
5.6	Turnover Analysis: Combined Sample	141
6.1	Job Changers Moving Directly to a New Job Without Any Intervening Unemployment, by Reason for Job Change: Ages 18 - 19	152
6.2	Variables used in Duration of Unemployment Analysis	153
6.3	Duration of Unemployment Regressions: Age 18	154
6.4	Duration of Unemployment Regressions: Age 20	155
6.5	Duration of Unemployment Regressions: Age 24	156
6.6	Unemployment Experiences 1966-1970: Males Aged 18-24 in 1966	157
7.1	Variables used in Wage Change Analysis	172
7.2	Wage Change Regression: Ages 18 - 19	173
7.3	Wage Change Regression: Ages 20 - 21	174
7.4	Wage Change Regression: Ages 24 - 25	175
7.5	Determinants of Wage Growth 1966-1970: Males Aged 18-24 in 1966	176

FIGURES

		Page
2.1	A Flow Chart of the Model	27
4.1a	Market Opportunity Coefficients by Age: Males (White)	103
4.1b	Market Opportunity Coefficients by Age: Males (Black)	103
4.1c	Market Opportunity Coefficients by Age: Females (White)	104
4.1d	Market Opportunity Coefficients by Age: Females (Black)	104
4.2	1970 Wage Rate by Age	105

CHAPTER I

Introduction

This study is an econometric investigation of the youth labor market using data taken from the National Longitudinal Surveys for young men and women. In this chapter we provide a brief overview of the study, first discussing the analytic framework, the data, and the estimating procedures, and then summarizing major findings.

1.1 Model, Data, and Estimating Procedures

Using the NLS data for young men and women, we estimate a recursive model of labor market behavior that has five components: labor market status, wage determination, turnover, unemployment duration and wage change. The model is stratified by age. We begin by pooling all 18 year olds and estimating the status and wage determination components. Next, we follow the 18 year olds to the next year's survey (where they are 19), and document their dynamic activity--job and wage changes, unemployment duration, etc. Using both sets of observations, we estimate the turnover, unemployment and wage change components. A second iteration estimates the status and wage determination components for 19 year olds, and then examines turnover, unemployment and wage change between ages 19 and 20. Successive iterations reestimate the model for each age group through 27-28. Stratification of the model by age helps pinpoint important changes in the youth labor market and provides observations from different years characterized by varied aggregate economic conditions. The model is estimated for a combined sample and separately for each race and sex. The status and turnover components are estimated by multinomial logit analysis; the other components, by regression techniques. A detailed description of the overall model is presented in Chapter II.

1.2 Major Findings

Classified by model component, our major empirical findings can be summarized as follows:

Labor Market Status (Chapter III)

The status component examines the sorting of individuals [illegible] work, school, and other activities at each age. Three models are estimated to analyze various facets of this sorting process. The school-work choice is emphasized in a multinomial logit model of four mutually exclusive and exhaustive alternatives: working, not enrolled; working, enrolled; enrolled, not working; and other (not enrolled or working). The more traditional distinction between employment, unemployment, and out of the labor force is emphasized in a second multinomial logit model. Finally, we estimate a model of the educational attainment of 24 year olds, an age when nearly all respondents had completed their formal education.

(1) College-age blacks are more likely to be enrolled in school than whites with similar measured abilities and socioeconomic backgrounds. The average enrollment rate of blacks is, however, substantially lower, reflecting important background differences. Similarly, equally qualified blacks at age 24 are just as likely to be employed as whites, but the black unemployment rate at this age is more than 4 percentage points higher than the white rate. At younger ages, racial disparities in unemployment are greater; blacks are more likely to be unemployed at ages 18 and 20 even controlling for personal and family characteristics.

(2) At every age, females are more likely than males to drop out of the labor force, and those out of the labor force are less likely to be enrolled

in school. Unemployment rates for females are higher, with black females experiencing the most severe unemployment problem.

(3) The relationship between educational attainment and subsequent labor market success is striking. Unemployment rates are persistently higher for individuals who do not go on to college; initial wage rates are lower and rise more slowly. For each age and level of educational attainment, females fare worse than males; the most serious early labor market problems, as indicated by unemployment rates and average wage rates, are faced by female high school dropouts.

(4) Reflecting deteriorating aggregate labor market conditions, unemployment increased from 1968 to 1971 for each race-sex group. Enrollment rates among males also dropped during this period. This decline may partly result from reduced pressures to remain in school as a method of avoiding military service during the Vietnam era.

Wage Determination (Chapter IV)

At each age iteration, a two stage wage determination model is estimated. In the first stage actual wage is regressed on a set of human capital variables, sex and race dummies (except when the sample is stratified by sex and/or race), and dummy variables indicating the year the respondent was the relevant age. In the second stage, the regression is expanded to include structural variables such as occupational, industrial and locational status. The two stage framework is employed to investigate the routing effect of human capital (how much of education's impact on wages is indirect--working through the occupational structure) and the importance of structural or demand side factors in the wage determination process (controlling for variation in worker quality, in what occupations and industries do workers receive wage premiums).

(1) Education has a large positive impact on wages; the impact increases with age and is greater for females.

(2) Married workers receive a wage premium that declines sharply with age. Disaggregating by sex reveals that married males receive a large premium that declines only modestly with age, while females begin with a small premium that turns into a discount and becomes successively more negative after age 19.

(3) Ability, health status, and attitudes all have the anticipated impact on wages. Although coefficients are typically significant, the change in wage implied by large differences in the independent variables is rather modest. The variables increase in impact with age.

(4) Workers also enrolled in school receive wage discounts that range from 17 percent at age 18 to 10 percent at age 24.

(5) Taking a vocational program in high school or a formal training program has a positive impact on wages. The effect of a training program is greatest for black females, increasing wages by 10 percent at age 18. At that age, a training program has no significant impact on wages of the other sex-race groups; by age 24 it has a significant impact for all except black males. Taking a vocational program in high school initially benefits white females the most, increasing wages by 8 percent at age 18. By age 24, the vocational training program variable has a significant effect only for white males, where a 9 percent increase in wages is estimated.

(6) Controlling for measured differences in productive capabilities, blacks and females receive lower wages. These wage discounts increase with age.

(7) We find substantial wage flexibility in response to aggregate labor market conditions. For males, real wages--standardized by age and skill level--increased dramatically during the boom period of the late 1960's. When aggregate labor market conditions deteriorated in 1970, however, real wages stagnated for older workers (aged 22-26) and actually declined for younger workers. For females, we find that real wages increased sharply in 1969, and stagnated in 1970 and 1971.

(8) The inclusion of occupation, industry and location variables in the wage regressions clarifies the nature of the wage determination process considerably. The estimated impact of the human capital variables on wages declines by 20 to 40 percent for males and 40 to 60 percent for females when we include the structural variables. This decline suggests that education and training play important indirect roles in routing workers into high paying occupations and industries. We also find that, controlling for occupation and industry, the magnitude of estimated sex and race discounts decline sharply.

(9) Workers having identical measured characteristics receive wage premiums or discounts of up to 20 percent for locational differences and up to 50 percent for occupational and industrial differences. Professional and managerial workers receive the largest premium; service workers, the largest discount. Transportation and communications is the industry group with the largest premium; agriculture, the largest discount.

Turnover (Chapter V)

Based on the observed turnover behavior of wage and salary workers employed in adjacent surveys, we estimate a multinomial logit model that has four mutually exclusive and exhaustive alternatives; quits, layoffs, job changers not reporting a reason, and job stayers.

(1) No significant pattern of racial differences in turnover is found when various job and personal characteristics are controlled.

(2) Females are much more likely than comparable men to change jobs at each age.

(3) Characteristics of the current job generally affect turnover in the expected direction. Male workers receiving less than their capabilities warrant quit; the effect is insignificant for females. The converse proposition that employers lay off workers receiving rents is not borne out by the data. Workers with more experience at the current job are less likely to change jobs, with a greater reduction in quits than in layoffs. Education also reduces turnover, although with less of an impact than experience.

(4) Job stability declines as aggregate economic conditions deteriorate with the greatest effect for layoffs.

Unemployment Duration (Chapter VI)

We estimate a regression model of the determinants of unemployment duration for workers changing jobs between successive surveys.

(1) The state of aggregate economic conditions has a tremendous impact on the expected duration of a job changer's unemployment spell. All else constant, an 18 year old changing jobs during 1970 could expect to be unemployed 3.5 weeks longer than the same 18 year old changing jobs during 1969. For a 24 year old the difference in expected duration declines to 1.2 weeks.

(2) Reason for job change has an important impact on a job changer's expected duration of unemployment. At every age, quits are unemployed two to three weeks less than layoffs.

(3) Blacks have substantially longer duration, increasing from .7 weeks more than whites at age 18 to 2.3 weeks more at age 24.

(4) Females have shorter duration. At every age, the length of their unemployment spell is about two weeks shorter than that of males.

Wage Change (Chapter VII)

Finally, a regression model of the determinants of the percentage change in the worker's real wage between succeeding surveys is estimated.

(1) Workers do not remain trapped in jobs below their capabilities. Those initially identified as receiving wage discounts have large wage increases between surveys. Although we are unsuccessful in identifying particular types of turnover activity as systematically affecting wage change, this improvement in economic position is facilitated if the worker changes jobs.

(2) As aggregate economic conditions worsen, the real wage declines. Controlling for turnover, unemployment, and human capital acquisition, the average 18 year old's real wage declined 10 percent during 1970. For 24 year olds the decline was only 3 percent.

(3) Race and sex have no significant independent impact on wage change between adjacent surveys.

(4) For job changers, duration of unemployment has no systematic impact on the wage received at the new job. If we adopt a longer time horizon, however, substantial unemployment during the early years of labor market activity is associated with a significantly lower rate of wage growth. The longer time horizon also reveals a significantly greater rate of wage growth for blacks.

CHAPTER II

A Dynamic Model of the Youth Labor Market

The youth labor market is the setting for many of the country's most critical employment-related problems--including jobs providing little meaningful work experience, race and sex discrimination, and high unemployment. Of these, youth unemployment has been the most studied problem.[1] Table 2.1, which reports the unemployment rate by age, race, and sex groups for 1967 (a full employment year) and 1975 (a year of substantial overall unemployment) summarizes the pattern of youth unemployment. The basic facts are disturbing. Persons aged 16-19 have an unemployment rate more than four times that of adults aged 25 and over, while the rate for persons aged 20 to 25 is twice that of the older group. As a result, persons aged 25 and under account for over half the unemployed, even though they represent less than one fourth of the labor force. For any age, or year, the unemployment rate among blacks[2] is twice that of whites; the female unemployment rate exceeds the male rate. Finally, aggregate economic conditions have a profound impact on the youth labor market. The deterioration in overall conditions in 1975 increased unemployment for all, reaching extraordinary levels for young minorities.

Although unemployment is central to any discussion of the youth labor market, it is by no means the only serious problem for researchers and policy makers to consider. The acquisition of productive skills (both through formal education and training programs and meaningful work experience), race and sex

discrimination, and the general social stratification process are topics of much importance and concern. What needs to be stressed at the outset, however, is that the youth labor market cannot be looked at simply as a collection of independent activities. Unemployment, wage determination and turnover are not independent activities, and unless this is explicitly recognized any analysis of the youth labor market will be incomplete. Simply knowing that a pattern of frequent job changing and (re)entry into the labor force is the proximate cause for youth unemployment, for example, tells us very little compared to analyzing the determinants and implications of dynamic activity. Does youth unemployment leave lasting scars or is it merely a transitional phenomenon? Is the high rate of job changing among young workers productive equilibrating behavior improving the worker-job match, or is this turnover excessive and unproductive? Questions of this sort are best answered from the vantage point taken here, that the youth labor market is a collection of causally interrelated activities.

Unfortunately, the vast majority of existing research on the youth labor market (or for that matter, labor markets in general)--abstracting from its other merits or shortcomings--has not acknowledged this interplay among behavioral relationships. Rather, the research has typically been tightly focused, concentrating on specific topics and ignoring interdependencies. With the recent availability of large longitudinal data files, however, the situation is rapidly changing. Longitudinal data enable researchers to follow individuals over time, thus providing evidence essential to understanding the interactions between various labor market activities.

Recently, several studies have used longitudinal data to examine the causal interrelations between youth labor market activities, estimating models that selectively link together activities such as educational attainment, wage determination, unemployment and turnover.[3] This study continues in that direction. Using data from the 1966 through 1971 installments of National Longitudinal Survey (NLS) for young men and women, we estimate a recursive model of the youth labor market that contains five basic components: labor market status, wage determination, turnover, duration of subsequent unemployment, and wage growth.

The study has a variety of goals. In addition to providing a broad overview of the youth labor market and probing for what facilitates or inhibits a successful transition of young people from the classroom to the labor market, we will examine how race and sex discrimination, structural segmentation, and variations in aggregate labor market conditions impinge on the youth labor market. Linking together in an interrelated theoretical structure topics that have for the most part been investigated separately facilitates a synthesis of past research and helps determine the robustness of previously observed empirical relationships--vital objectives if we are to be successful in our attempt to provide a comprehensive overview of dynamic activity in the youth labor market.

2.1 Data and Model

Much research in labor economics, currently and historically, has taken either the neoclassical-human capital view of labor markets or the structuralist-dual labor market view. Researchers with a human capital orientation emphasize the competitive forces at work in the market, and frequently disregard institutional rigidities which may limit the market's ability to fully (and quickly) adjust to changing conditions. Structuralists, on the other hand, concentrate

on institutional factors such as unionization and industrial concentration which tend to segment the market, often failing to consider the possible intervention of competitive forces.[4] The present study takes a more balanced, eclectic view of the forces dominating the youth labor market. Although the competitive model of labor markets is the stimulus for most of our hypotheses, the importance of structural forces and institutional realities is explicitly examined within the formal structure of our model.

Since the precise formulation of our model crucially depends on the unique characteristics our data, that is where we first turn our attention. The data we analyze in this study are from the National Longitudinal Surveys (NLS) for young men and women. Briefly, the NLS data were collected as follows. During October-December 1966, 5225 men aged 14 to 24 were surveyed, with subsequent interviews conducted through 1970. Interviews of 5159 women in the same age group were begun in early 1968, and were continued annually through 1971.[5] With the NLS administered to the same individuals in succeeding years, responses from any given individual are available at five different ages (four for females). In addition to ascertaining the respondent's current situation, the initial interviews extensively probed the past--particularly aspects of family background, education, work experience, and training. Followup surveys monitored subsequent labor market activities.

The data are particularly well suited to our needs. The surveys provide detailed information on individuals' family background, personal attributes (including mental ability tests taken early in the educational process), and aspects of current labor market status (such as labor force participation, enrollment in school, wage rate and type of job). In addition, the lon[illegible] character of the data make it possible to trace the movement of indiv[illegible]

through the labor market over time. Finally, the ages of the respondents (14 to 24 at the time of the initial survey) span any relevant definition of the youth labor market, and the time period covered (1966 to 1971) provides observations from periods of sharply different levels of aggregate demand.

The model is recursive, examining labor market activities in sequence. In estimating the model, we stratify the NLS sample by age. In addition to helping pinpoint structural and behavioral differences attributable to age, this stratification generates observations from periods when aggregate labor market conditions differed sharply.

The initial iteration (age 18-19) of our model is described in Table 2.2. We begin by pooling all respondents age 18 in any survey year, and examine their labor market status (2.1). Next, we limit the sample to employed wage and salary workers and analyze the wage determination process (2.2).[6] The remaining components exploit the logitudinal character of the data. Following respondents to age 19, we document labor market activity during the intervening year and investigate the temporally ordered activities of turnover (2.3), unemployment (2.4) and wage change (2.5). This completes the first iteration.

Within an iteration, the sample fluctuates as we move from component to component. After the status component, respondents not employed as wage and

salary workers are dropped from the sample since the rest of the iteration examines employment-related activities. Moving from wage determination to the turnover, unemployment, and wage change components, more respondents are dropped. These components require information from respondents at age 19. Consequently, those respondents age 18 in the final survey (1970 for males and 1971 for females) plus those not interviewed at age 19 because of attrition from the NLS are excluded. The unemployment component is limited to job changers.

In subsequent iterations the model is estimated for the following age groups: 19-20, 20-21, 21-22, 22-23, 23-24, 24-25, 25-26, 26-27, 27-28--a total of ten iterations. The procedure for each of these iterations is much the same. First a new sample is drawn, consisting of all respondents of the requisite initial age in any survey. Moving through components, adjustments in the sample occur in the same manner as in the age 18-19 iteration. Table 2.3 indicates the source of data for each iteration of the model. Figure 2.1 illustrates the flows within each iteration and how iterations are linked together.

The model can best be understood by abstracting from its iterative character and working through the various components in the age 18-19 iteration. What follows is a brief discussion of each component, including how it relates to other parts of the model. Our intent is to provide a preliminary overview; at this point, we will not address many of the substantive issues associated with estimation or probe very deeply into underlying behavorial relationships. A more detailed development of the various components (which can be viewed as separate submodels) is found in subsequent chapters.[7]

Each iteration begins by examining a respondent's labor market status during the survey year, divided into four exhaustive and exclusive categories: enrolled in school, not working; enrolled in school, working; not enrolled in school,

working; and either unemployed or out of the labor force (2.1). With these categories as alternatives, a multinomial logit model is estimated. Explanatory variables include family background, ability, sex, race, and controls for the year in which the respondent was age 18 ("market opportunity" variables). As an alternative, the status component is estimated on the basis of survey week activity.

The status component is a simultaneous equations model of the schooling and employment decision. In relation to the rest of the model, the status component performs two important housekeeping functions. First, it reduces the sample to employed wage and salary workers--the group analyzed in subsequent components--and in the process reveals any systematic differences between these workers and other respondents. Second, it links together successive iterations of the model by accounting for changes in the sample associated with each iteration.

For those respondents employed as wage and salary workers, we estimate a two-stage model of the wage determination process. In the first stage (2.2a), actual wage is regressed on a vector of standard human capital variables, plus the market opportunity variables (and race and/or sex dummies when the sample is not stratified along those lines). This cross-sectional hedonic wage regression provides estimates of the current market prices for specific elements in the human capital vector. We define the predicted value from this regression the worker's "potential wage;" it is the wage he could be expected to receive in the market given his capabilities.

A worker's current wage, however, frequently deviates from his potential; we designate this deviation the "market differential." Market differentials might result from entry into a privileged employment enclave, differential investments in training at the workplace or other unmeasured variations in working conditions, labor market disequilibrium, or simply from a chance encounter and acceptance of an exceptional job opportunity. e proxies for the systematic determinants of the market differential

include occupation, industry, and location. In the second stage regression (2.2b), these proxies are added to the set of explanatory variables in order to provide an estimate of current wage as opposed to the potential wage estimated in Stage I. Equation (2.2c) defines the market differential as the difference between a worker's predicted current and potential wage. An alternative specification, of course, is the residual from the potential wage equation. In the context of our model, however, using a residual specification would result in serious econometric problems; measurement error in current wage will be spuriously correlated with observed wage change. With the instrumental specification of the market differential (2.2c), this problem is eliminated.

Subsequent components examine dynamic behavior stimulated by the market differential, testing the hypothesis of an equilibrating labor market. The competitive theory of labor markets predicts that noncompensating wage differentials erode over time, with wages increasing for workers earning less than their potential and falling for those earning more. Frequently, however, wages at the current job are inflexible, necessitating job changing activity to accomplish this equilibration. As a result, we expect negative market differentials (potential wage greater than current wage) to stimulate quits, and positive differentials to encourage layoffs. We test this hypothesis by estimating a multinomial logit model of respondents' turnover activity between adjacent surveys (2.3). Alternative job changing activities include: remains at initial job; different employer, quit initial job; different employer, laid off initial job; and different employer, discharged or left for an unknown reason.

To investigate the implications of turnover we go on to estimate regression models of the duration of unemployment for respondents changing jobs between surveys (2.4), and wage change between adjacent surveys (2.5). The wage change component conveniently summarizes the pattern of dynamic equilibration in the youth labor market, indicating the extent to which competitive forces liquidate existing market differentials and what, if any, contribution turnover or unemployment make to the process.

To summarize, the model initially documents the status quo--who is where, what are the market prices for specific skills, and who receives a wage inconsistent with his skills. Doing so is a valuable, but inconclusive exercise--the implications for manpower policy are quite different if specific cohort of young workers are permanently trapped in dead-end jobs below their capabilities, than if these young workers are routinely able to move into jobs consistent with their capabilities. The dynamic portion of the model attempts to provide crucial evidence on what happens to specific workers over time, thus serving to clarify many issues that cannot be resolved in a static setting.

Although we have scarcely mentioned the possible impact of race and sex, either (or both) of these factors--as the evidence presented in Table 2.1 indicates--has the potential to be a dominating systematic force in the youth labor market. To investigate the possibility of structural differences attributable to race and sex we estimate the model separately for these groups, in addition to including dummy variables in the general specification.

2.2 Longitudinal Data and Recursive Models

Before concluding this chapter, we address two important issues: alternative methods of exploiting the longitudinal character of the data, and the appropriateness of using a recursive model.

We pool observations by age from every year in the survey and estimate a forward recursive model consisting of five equations for each age. Several alternative organizations of the data are possible. Probably the most appealing option is to limit the sample to respondents participating in every survey, and trace the labor market activities of a given age cohort over time. This approach is used by Stevenson (1977), who follows a cohort of youth aged 16 to 19 in the initial NLS survey (1966 for males, 1968 for females) through seven years of data. This alternative could, of course, be expanded to include respondents of all ages who participated in every survey and introducing interaction variables to allow for age-related structural differences. In addition, the sample could be expanded slightly in earlier years of the survey if subsequent attritions are not removed from the analysis.

Our argument is not that an "aging cohort" organization of the data is inappropriate. On the contrary, it has important advantages and provides a useful and valuable contrast to our approach. The most important advantage is that the same individuals are studied over a given period of time. In this sense, our own approach is not authentically longitudinal, since different groups of individuals are studied at different ages. Moreover, if the sample is restricted to a single age, aging cohort analysis also

eliminates problems in interpretation due to human capital vintage effects. In brief, a vintage effect occurs when persons who were educated at different times are pooled. Changes in the available stock of knowledge over time (due, say, to technological advance) imply that a given number of years of schooling represents a different level of useable skills for respondents educated at widely separated times.[8] The approach actually used in this study pools individuals across years and is thus subject to this problem (although the problem may not be severe given that at most four years separates observations of individuals at a given age).

The aging cohort organization does have limitations. If we restrict the analysis to a single age cohort to avoid vintage effects, only about 1/11th of the data would be utilized. The sample would be too small to estimate the turnover and unemployment components of the model with any confidence. Expanding the analysis to include several ages reintroduces vintage effects and requires the addition of numerous age interaction variables to uncover any systematic age effects on market structures. By comparison, our approach disaggregates the data by age and allows us to directly observe structural change by comparing estimated coefficients of the model across ages. In addition, the influence of changing aggregate economic and social conditions cannot be distinguished from the effects of the aging process using the aging cohort technique. At each iteration of the model the sample ages one year, simultaneously with any change in economic and social climate that occurred over the year. Pooling observations for a single age over five years of survey data allows an explicit examination of the impact of changing conditions disentangled from the effects of aging.

The two alternative methods of data organization provide different vantage points for an overview of the youth labor market. Resulting analysis should be viewed as complementary rather than competing, and much is to be gained by comparing studies based on the two methods. Indeed, although we emphasize the age disaggregation approach, we also employ an aging cohort analysis to supplement our discussion of job changing activity and its consequences.

The model itself is recursive. That is, each activity (dependent variable) is temporally ordered, and we treat each activity as predetermined in estimating subsequent equations (components). Error terms are then independent across components, which allows the estimation of each component separately. This estimating procedure is appropriate even if a component is itself a simultaneous system--as is the case with the two components that are estimated using a multinomial logit specification.[9]

It could well be argued that some of the activities examined here are jointly determined. We did not attempt a full simultaneous equations specification of the model because sample sizes fluctuate from component to component. The status component is estimated using the full sample, the wage determination component is restricted to wage and salary workers, the turnover and wage growth components are further restricted to wage and salary workers employed in successive years, and the unemployment component is restricted to wage and salary workers employed in successive years who change jobs. This fluctuation precludes standard simultaneous equations estimating techniques. An alternative is to use an instrumental variables

approach to obtain consistent estimates of unobserved variables, but there are problems here too. Since we analyze survey data, the power of estimation for individual equations is frequently quite low. Adopting an instrumental variables approach under such conditions would push the signal to noise ratio of most imputed variables to near zero. In sacrificing efficiency to obtain consistency the price would be too high. Moreover, imputing values of unobserved variables for respondents outside the sample at hand may result in well known problems of selectivity bias.[10]

2.3 Plan of the Study

The study is organized as follows: In Chapter III we take a detailed look at the distribution of young people among labor market activities and estimate the status component. In a short digression, this chapter also analyzes the determinants of educational attainment. Chapter IV contains the wage determination component. The turnover, unemployment, and wage change components are discussed in Chapters V, VI, and VII respectively. Chapters III through VII are for the most part self-contained, with a detailed articulation of the specific hypotheses to be tested, as well as presentation of the empirical results. However, they do follow the recursive structure of the model and take the results obtained in earlier chapters (components) as given. In Chapter VIII the results are drawn together and some conclusions for labor market analysis and manpower policy are offered.

Footnotes to Chapter II

[1]See, for example, Folk(1968), Kalachek (1969), Fisher (1973), Freeman (1976), Hedges (1976), Ragan (1977), and Adams and Mangum (1977).

[2]Throughout this study, black includes all individuals who are not white.

[3]For example, Kohen and Roderick (1975) and Griliches (1976) analyze the linkages between the acquisition of schooling and wage determination. Andrisani (1973) and Flanagan (1974, 1975) relate wage determination and turnover; Ehrenberg and Oaxaca (1976), unemployment and wage growth.

[4]For a detailed discussion and comparisons of the alternative theories, see the recent surveys by Wachter (1974) and Cain (1976). The basic human capital approach is set out in Becker (1975) and Mincer (1974). Internal labor market theories are discussed in Doeringer and Piore (1971).

[5]Since this study was undertaken, additional years of data have become available. For a more complete discussion of the NLS, see U.S. Department of Labor (1970-1975 and later volumes) and Center for Human Resource Research (1973). In addition to a general discussion, these monographs provide a full and detailed account of the survey questionnaires; the sampling, interviewing, and estimating procedures; and basic statistical information on selected variables.

[6]Throughout the study, all monetary variables (including wages) are deflated for price level changes and are expressed in 1966 dollars.

[7]Our model is similar in spirit to the social stratification models of Duncan, Featherman and Duncan (1972), Ornstein (1976), and others, and

includes many of the linkages that have been selectively analyzed by others (see footnote 3). Its specification is quite similar to that of Mellow (1975), who analyzed labor market behavior of older men.

[8]Welch (1973) discusses vintage effects in the context of racial differences in returns to education.

[9]See Maddala and Lee (1976).

[10]See Heckman (1974).

Table 2.1

Unemployment Rates by Sex, Age and Race: 1967 and 1975

Sex and Age	Unemployment Rate			
	White		Black	
	1967	1975	1967	1975
Males				
18-19	9.0	17.2	20.1	32.9
20-24	4.2	13.2	8.0	22.9
25 and over	1.9	5.0	3.8	9.5
Females				
18-19	10.6	16.1	28.3	38.3
20-24	6.0	11.2	13.8	22.5
25 and over	3.4	5.8	6.0	9.1

Source: Handbook of Labor Statistics 1976, Tables 3 and 57. Figures for those aged 25 and over were calculated as a weighted average of the unemployment rate for the various adult age groups; weights were obtained from data in Table 3.

Table 2.2

A Dynamic Model of the Youth Labor Market: The Initial (Age 18-19) Iteration

(2.1) $STAT_{18} = F(RACE, SEX, MO, FB, IQ, ED_{18}, CJT_{18})$

(2.2a) $WAGE_{18} = G(RACE, SEX, MO, IQ, ED_{18}, CJT_{18}, MST_{18}, TRAIN_{18}, PC_{18})$

(2.2b) $WAGE_{18} = H(RACE, SEX, MO, IQ, ED_{18}, CJT_{18}, MST_{18}, TRAIN_{18}, PC_{18}, LOC_{18}, OCC_{18}, IND_{18})$

(2.2c) $MD_{18} \equiv \widehat{WAGE}_{18}(2.2b) - \widehat{WAGE}_{18}(2.2a)$

(2.3) $TURN_{18,19} = I(RACE, SEX, MO, ED_{18}, CJT_{18}, MST_{18}, MD_{18})$

(2.4) $UNEM_{18,19} = J(RACE, SEX, MO, ED_{18}, CJT_{18}, MST_{18}, MD_{18}, TURN_{18,19})$

(2.5) $WDOT_{18,19} = K(RACE, SEX, MO, ED_{18}, CJT_{18}, MST_{18}, MD_{18}, TURN_{18,19}, TRAIN_{18}, UNEM_{18,19}, ADD_{18,19})$

The variables in equations (2.1) through (2.5) are defined as follows:

- $STAT_{18}$ - labor market activity at age 18 (alternatives include employed, enrolled in school, enrolled in school and employed, and a residual which includes unemployed or out of the labor force).
- $WAGE_{18}$ - hourly wage at current job.
- $TURN_{18,19}$ - comparison of employment status at ages 18 and 19 (alternatives include same employer, different employer-quit prior job, different employer-laid off prior job, different employer-reason not ascertainable).
- $UNEM_{18,19}$ - weeks unemployed between ages 18 and 19
- $WDOT_{18,19}$ - percentage change in real wage rate between ages 18 and 19.
- RACE - dichotomous variable indicating that the respondent is nonwhite.
- SEX - dichotomous variable indicating that the respondent is female.
- MO - vector of dichotomous variables indicating the survey year respondent was 18.
- FB - family background variables, including mother's education, father's occupational socioeconomic status, and number of siblings.
- IQ - mental ability score.
- ED_{18} - completed years of education at age 18.
- CJT_{18} - current job tenure in years at age 18.
- MST_{18} - marital status at age 18.
- $TRAIN_{18}$ - training programs completed at age 18.
- PC_{18} - other personal characteristics, including health status and attitudes at age 18.
- LOC_{18} - geographic location at age 18.
- OCC_{18} - occupation at age 18.
- IND_{18} - industry at age 18.
- $ADD_{18,19}$ - increments of education, training, and experience between ages 18 and 19.
- MD_{18} - market differential at age 18.

Survey Year	Age During Survey Week 14	15	16	17	18	19	20	21	22	23	24	25	26	27	28	Total in Year
1966	687	669	693	604	516	399	293	298	348	357	361					5225
1967		674	650	642	540	421	342	263	266	332	325	335				4790
1968	394	551	1189	1142	1083	917	863	766	629	604	700	310	329			9477
1969		385	534	1124	1064	976	836	854	732	599	577	671	299	312		8963
1970			384	527	1049	981	944	849	864	729	590	567	661	309	305	8759
1971				375	515	497	486	473	452	472	418	345	328	353		4714
Total in Age Group	1081	2260	3450	4414	4767	4191	3764	3505	3291	3093	2971	2228	1617	974	305	
Model Components[b] Estimated with Data from the Indicated Age Group[c]					18	19	20	21	22	23	24	25	26	27	28	
					18	19	20	21	22	23	24	25	26	27	28	
					18 19	19 20	20 21	21 22	22 23	23 24	24 25	25 26	26 27	27 28		

a The table indicates the number of respondents who were the stated age during a particular survey week. Males were interviewed annually from 1966 through 1970; females from 1968 through 1971. The 1966 entries for males and the females portion of the 1968 entries contain all respondents initially interviewed. For other years, only individuals still participating in the survey are included. The arrows indicate the same individuals in different survey years.

b The component symbols are defined in the notes to Figure 2.1.

c Independent variables for the dynamic sector (◇) are obtained from data at the initial age, dependent variables, from the next year's survey.

Table 2.3
Sample Distribution by Age and Survey Year for NLS Young Men and Women Data[a]

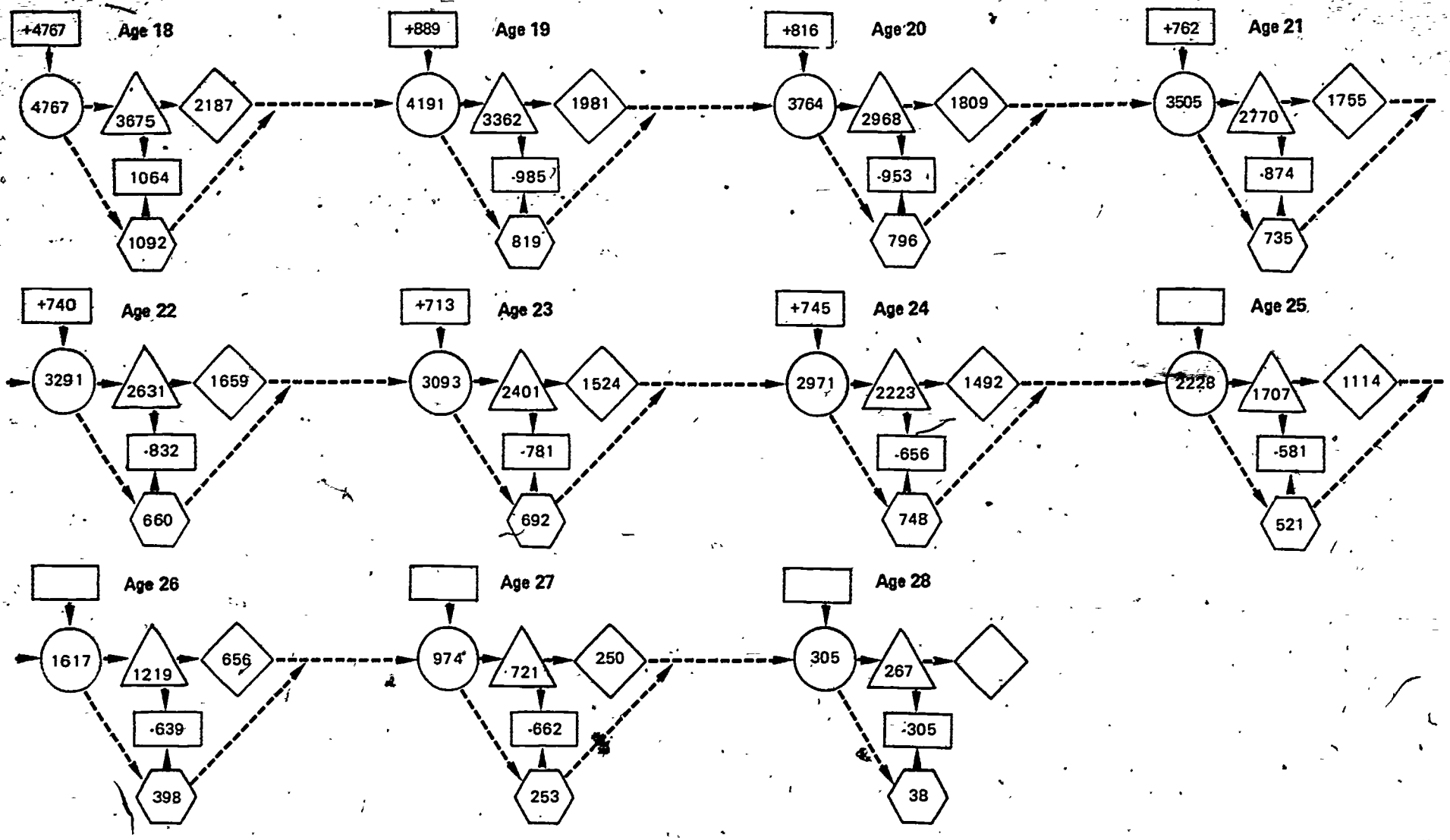

a. Components of the model at a given iteration are represented by the following symbols.

Labor Market Status

Wage Determination Sector

Dynamic Behavior Sector

Inflows and outflows. The inflows are those at the indicated age in 1966 (1968 for females); the outflows are those at the indicated age in 1970 (1971, females)

Individuals who are not employed as wage and salary workers at the indicated age.

The relevant sample size for each component of each iteration is indicated within the component symbol.

Figure 2.1
A Flow Chart of the Model[a]

CHAPTER III

Schooling and Labor Market Activities of Youth

The late teens and early twenties are a transitional period during which individuals make decisions which influence the future course of their lives. Formal education is usually completed, and initial contact made with the labor market. This chapter examines the education and employment activities of the youth in our sample, emphasizing the changing pattern of activities as maturing individuals become aware of their market opportunities and lifetime goals. We focus on several questions: Who are the unemployed? Who continue their formal education beyond high school? Do the less educated experience a more difficult transition from school to work, encountering longer periods of high unemployment? Do deteriorating aggregate economic conditions disproportionately affect some groups in the youth labor market?

These and other issues are investigated using cross-tabular analysis to document flows of various groups into employment and schooling. In addition, multivariate models of current market activity and completed education are estimated to determine the relative contribution of individuals' ability and previous experiences, family background, and external market forces, to decisions made at each age. We treat the current school attendance-labor force participation decision as a problem of allocating time among competing activities. That is, current school attendance and labor force participation are analyzed in a simultaneous framework which accounts for

the interdependence of these decisions. The analysis is related to recent investigations of educational attainment by Duncan, Featherman, and Duncan (1972), Jencks (1972), Griliches and Mason (1972), Parsons (1974), and others who have investigated various aspects of the intergenerational transmission of economic inequality.

We begin by describing the alternative activity classifications upon which the analysis is based.

3.1 School Enrollment and Labor Market Activities: Tabular Analysis

As we noted in Chapter II, job instability is a dominant feature of the youth labor market. Labor force attachment is low; turnover is high even among those who have completed their education. Observations of youth at a single moment in time may not capture the full variety and volatility of their experiences. Consequently as we examine school enrollment and labor market activities, we will alternatively classify the youth in our sample according to their activities during the survey week and during the year preceeding the survey.

3.1a Survey Week and Survey Year Activities

The survey week classification is based on Bureau of Labor Statistics definitions of employed, unemployed, and out of the labor force.[1] We further subdivide the three BLS classifications according to survey-week enrollment status, resulting in six categories: employed, currently enrolled in school (EMP-S); employed, not enrolled (EMP-NS); unemployed, enrolled (UNEMP-S); unemployed, not enrolled (UNEMP-NS); out of the labor

force, enrolled (OLF-S); out of the labor force, not enrolled (OLF-NS). The survey year classification expands the time horizon to one year. Four classifications are defined: worked at all during the year preceeding the survey week and enrolled in school at some time during that year (SW); no work during the survey year but enrolled (SNW); worked during the survey year and not enrolled (WK); and others, unemployed or out of the labor force for the year and not enrolled in school (OT). Individuals are included in the two "work" categories if they worked at least two weeks during the year at either a full- or part-time job, and reported sufficient information to compute an hourly wage. NLS data editing procedures effectively limit this group to wage and salary workers.

Table 3.1 reports school enrollment and labor market activities by race and sex for youth aged 18, 20, and 24.[2] In Table 3.2 survey week activities are disaggregated by enrollment status. Examining the relationships among survey year and survey week activities highlights the volatility in the youth labor market. A much higher proportion of 18 year olds worked or went to school some part of the year than during the survey week; the disparity declines with age. About 85 percent of 18 year old white males worked during the year (WK + SW), compared to 63 percent for the week (EMP); 78 percent went to school during the year (SW + SNW), compared to 57 percent for the week (ENROLLED). The high proportion of respondents who are both workers and school enrollees for the survey year at age 18 largely reflects the phenomenon of summer employment among college students. By contnast, those classified as employed and enrolled during the survey week are most likely engaged in one of the

two activities on a part-time basis.

Activity patterns characteristic of different race and sex groups are documented in the tables. Young males have a high degree of labor force attachment, even at the youngest ages. Lower labor force participation rates by whites are largely explained by higher school enrollment rates, but by age 24 white and black males exhibit very similar participation rates. Young females have substantially lower labor force participation rates than males and, as Table 3.2 shows, a very high proportion of females out of the labor force are not enrolled in school. These figures suggest the importance of domestic responsibilities for women even at very young ages. The incidence of unemployment falls heaviest on females--especially blacks--and on black males. All groups experience lower unemployment rates at older ages, but, reflecting national patterns, the rates of women and minorities are still substantial at age 24.

The persistence of high unemployment among women and blacks can be traced back to their pattern of labor market activities at age 18. It is then that a high proportion enter the labor market possessing very low skill levels. This, coupled with possible discrimination in hiring practices, results in high unemployment rates. Unemployment retards the early development of marketable skills resulting in increased unemployment rates at subsequent ages.[3] How post-high school education interrupts this pattern of persistent high unemployment is not obvious. Formal education contributes to the individual's stock of marketable skills. In addition, some analysts (Spence (1973), for example) argue higher education is a screening device used by employers to differentiate among

workers. In other words, education provides the basis for identifying potential workers with such desirable characteristics as ability, motivation, and discipline--attributes which are not easily measured. Irrespective of the channels through which education contributes to job stability, what is clear is that white males (the most highly educated group in our sample) have substantially lower unemployment rates at every age.

3.1b Labor Market Activities of Youth Grouped by Educational Attainment

Additional light can be shed on the relationship between educational attainment and the transition from school to work by examining the early labor market experience of individuals grouped according to final levels of formal education. This classification of respondents into completed education groups is somewhat arbitrary, since additional education may be received after the last available observation. However, since most people complete their education by their early twenties, this should not be a serious source of error.

A two tier classification system is used. High school dropouts or terminal high school graduates are classified according to their educational attainment at age 20 or older. College dropouts or college graduates are classified according to their educational attainment at age 24 or older. Respondents less than 20 at the last survey, and respondents having post-high school education who are under the age of 24 at the last survey, are excluded from the sample. All respondents are classified according to their last reported education level.

Survey week and survey year activites of respondents grouped by

terminal education level are described in Tables 3.3 and 3.4. The initial year in the labor market is equally bleak for male high school graduates and high school dropouts, whose unemployment exceeds 11 percent at age 18, but graduates adapt more quickly to the market. By age 20, the unemployment rate of graduates falls to just over 6 percent, while dropouts experience nearly 11 percent unemployment. A substantial unemployment gap persists at age 24. The inverse relationship between education and unemployment holds as well for the college-educated workforce. The racial dimension of this pattern of early labor market activity is indicated by the proportion of each group which is black. Both here and in the female sample, blacks are concentrated in the lowest education groups.

Differences in the labor market experience of females grouped by educational attainment are even more striking. Female high school dropouts experience unemployment rates twice as high as graduates at every age--and three times as high as male dropouts. Among females, high school graduates fare slightly better than college dropouts, and college graduates experience the lowest incidence of unemployment at age 24. In contrast to males, female labor force participation rates appear positively associated with completed education, although the participation rate among female college graduates is nearly 9 percentage points below that of their male counterparts at age 24.

Another dimension of the early labor market experience of young people is described in Table 3.5, which presents average wage rates for workers grouped by terminal education level. This tabulation uses the

same samples used to construct Tables 3.3 and 3.4, except that persons not reporting a wage are excluded. Because of the way survey year classifications are defined, all persons who are working (WK) or enrolled and working (SW) reported a wage rate. The response rate for wages from the survey week category employed (EMP) is very high, with at least 85 percent of all employed persons in each age-education group reporting a wage.

The average wage paid high school graduates at age 18 is higher than the wage paid dropouts for both males and females, with the differential widening with age. Male college dropouts earn a wage roughly comparable to that of high school graduates at comparable levels of potential job experience, while a positive differential is observed for females. College graduates of both sexes earn substantially higher wages at age 24 than other groups. Finally, the male-female disparity is substantial, with the largest negative differential observed for the least educated females.

Admittedly, some of the results in Tables 3.3 to 3.5 are based on very small samples. However, the striking consistency of patterns relating educational attainment to measures of labor market success is worth noting. Unemployment rates are higher and those high rates persist for persons who do not go on to college. Wage rates are lower and rise more slowly for the less educated. The problems faced by high school dropouts are most acute. Females in any education group fare worse than males.

Two related studies using NLS data support these observations. Kohen and Andrisani (1973), using a sample of nonenrolled males from the 1969

survey, find that high school graduates experience lower unemployment rates than dropouts.[4] They also find small differences in the average hourly earnings of high school graduates and dropouts who are just entering the labor market, with the differential in favor of graduates increasing with continued market experience. Parnes and Kohen (1976) use multiple classification analysis to study the labor market activities of nonenrolled males and females aged 16 to 21 in 1971. Controlling for a number of human capital variables, they too find that high school dropouts and high school graduates experience equally high unemployment during the early years of labor market entry (ages 16 to 19 in 1971). Unemployment for ages 20 and 21 in 1971 is actually higher than the rates for ages 16 to 19, although the relative position of graduates vis-à-vis dropouts improves somewhat for this age group. Parnes and Kohen also find higher average hourly earnings for high school graduates, with the highest earnings received by white males.

Although these results are suggestive, the direction of causality between education and labor market outcomes cannot be inferred on the basis of this evidence alone. As we discussed earlier, education might serve as a screen, with more productive individuals choosing more education. The superior market outcomes of highly educated persons would then partly be a return to their innate productivity rather than solely a return to schooling. Moreover, our investigation has not controlled for variations in other factors which could well affect labor market success. In an attempt to do this we turn to a multivariate analysis of school enrollment and labor market activities.

3.2 School Enrollment and Labor Market Activities: Multivariate Analysis

Decisions to enroll in school and to enter the labor force are jointly determined, in the sense that these activities are competing uses for a fixed amount of time. Moreover, both can be viewed at least partly as human capital investment decisions. As Mincer (1962) has observed, employment generally involves some form of training, ranging from formal training programs and apprenticeships to informal opportunities to learn from experience. Labor market experience and formal education often substitute for each other. In many instances an equivalent skill level can be achieved by replacing a period of formal schooling with work experience. Thus, entry into the labor market is not the end of education, in the general sense of the term.

Many factors influence labor force-education decisions, including previous labor market and educational experiences, ability to finance formal education, tastes for school and work (influenced partly by the social climate in which an individual is raised), and the availability of employment opportunities. In this section we estimate a multinomial logit model[5] of alternative enrollment and labor market activites. The dependent variables are either the survey week or survey year activity classifications discussed in the previous section. Tables 3.6 and 3.7 report mean values of the variables used in the anlaysis.

The information required to construct several crucial independent variables, especially IQ, is incomplete. Eliminating individuals on the basis of incomplete data would result in a serious loss of information,

possibly resulting in selectivity bias. In the case of IQ, for example, the nonresponse rate is significantly higher for the "Other" and "Unemployed" categories. To reduce potential bias, missing values are assigned means based on the sample of valid responses, and a dichotomous variable assuming the value 1 for nonresponses is included. As a result, interpretation of the estimated impacts of some explanatory variables should be qualified for variables with high nonresponse rates.

We can observe individuals only in their chosen activity, having no information on the alternatives that were open to them. In particular, wage data are available only for those currently employed, even though wage prospects certainly enter the decision making process of other individuals. As a control for this deficiency we include human capital variables important in determining wage rates: A measure of native ability, years of completed education, years of experience at the most recent job[6] and race. Sex and age enter through disaggregation of the sample. One disadvantage of this partial reduced form approach to the missing variable problem is that the separate effect of wage rates cannot be disentangled from the direct impact of the human capital variables. Thus, the estimated coefficients of human capital variables measure their net impact on activity choice.

Family background variables partly control for educational preferences and for financial support that the family might be able to provide. Mother's education and father's socioeconomic status are related to the respondent's ability, taste for education, and ability to finance educational activities. The number of siblings is an indicator of the parents' time

input to the development of the respondent, and may be negatively related to child quality. It also represents competing demands on family finances. Finally, market opportunity variables, which control for the year of observation, reveal the impact of aggregate economic conditions on the decisions of youth. Estimated coefficients of the market opportunity variables also reflect changes in other social and economic forces which occurred during the period of observation. For example, the activity choices made by young males over the period studied were clearly influenced by their exposure to the draft during the Vietnam war.

The means reported in Table 3.6 indicate a progressive selection process in school attendance. Respondents enrolled at age 18 have several advantages compared to those not enrolled: IQ and mother's education means are somewhat higher, father's socioeconomic status much higher, and number of siblings lower for the enrolled. With age the advantage grows; apparently individuals with fewer financial resources and tastes for education terminate their education and enter the labor force. This pattern is somewhat less distinct for females.

Table 3.7 illustrates how the characteristics of young workers change with age. Those entering the labor force at age 18 are similar in terms of average personal and family background characteristics. The same is true at age 20. By age 24, however, labor force characteristics change as college-educated youth eomplete their education. A number of family background and human capital variables are now substantially higher for the employed. On the other hand, some things do not change.

At every age the unemployed have very low levels of recent job experience, compared to the employed. Out of the labor force males are primarily enrolled, while females are more likely to be following a domestic role. The impact of declining aggregate economic conditions is noticeable at each age, with a disproportionate share of unemployment occurring in 1970 for men and 1971 for women.

Estimates of the logit status model are reported in Tables 3.8 through 3.15. Tables 3.8 through 3.11 report parameters and derivatives evaluated at the mean for survey year activities of males and females ages 18, 20, and 24; Tables 3.12 through 3.15 report survey week results. The logit specification was normalized by setting the coefficients for one of the dependent variables equal to zero: working, not enrolled (WK) for the survey year classification and out of the labor force (OLF) for the survey week classification. Thus the parameters (Tables 3.8, 3.10, 3.12, 3.14) report the effect of a change in the independent variables on the relative probability that a given activity is chosen. The derivatives, on the other hand, are calculated for all dependent variables. They report the marginal effect of a change in the independent variables on the absolute probability that a given activity is chosen, in the vicinity of the sample means. Since the logit formulation is nonlinear, the derivatives vary when evaluated elsewhere.

3.2a Survey Year Results

Consider first the survey year results for males (Tables 3.8 and 3.9). At each age, IQ has a significant positive effect on school enrollment although smaller at age 18, before the previously described self-selection

process becomes important. The net impact of completed years of education is likewise to increase the probability of continued enrollment at all ages. Coefficients of work experience are difficult to interpret for younger ages since there is little possibility for variation. By age 24, work experience has a significant negative impact on enrollment, and the derivatives indicate a larger positive effect on the probability of employment than on the probability of being in the category of other activities (OT).[7] At ages 18 and 20, father's socioeconomic status has a significant positive impact on enrollment; the variables lose all significance at 24. Other family background variables are insignificant. Blacks are significantly more likely to be enrolled at ages 18 and 20, more likely to be working at age 24. This result may not represent true equality of opportunity, however, since the deprived social and financial background of blacks effectively forecloses many of their education and employment opportunities. Summing derivatives of the market opportunity variables over the two enrolled categories indicates a decline in enrollment over the period. Comparing 1970 with 1968, 18 year olds are 6 percent and 20 year olds are 17 percent less likely to be enrolled. The impact is essentially zero for 24 year olds, when school enrollment is considerably less important. This decline in enrollment for younger males may reflect the changing nature of the military draft rather than the effects of a declining aggregate economy. After 1968 both draft callups and the protection from callup afforded college students declined, thus reducing the incentive to enroll simply to avoid the draft. This speculation is supported by the lack of a systematic year effect on female enrollment, shown in Tables 3.10 and 3.11.

For females, IQ has a significant positive enrollment effect at ages 18 and 20, declining to insignificance at age 24. Education significantly increases the probability of current enrollment at each age. In contrast to our findings for males, previous work experience has a large impact on current employment status, substantially increasing the likelihood of employment and decreasing that of being engaged in other activities. Once again blacks are more likely to be enrolled at ages 18 and 20, and to be working at age 24. Mother's education and father's socioeconomic status have significant effects only at age 18, when they both stimulate enrollment. Although derivatives indicate a modest decline in employment between 1970 and 1971, the overall pattern of market opportunity coefficients is mixed.

3.2b Survey Week Results

The survey week results (Tables 3.12 to 3.15) provide more direct evidence on the determinants of youth unemployment. Reflecting the importance of the enrollment decision, IQ and education have their most important effects by routing males out of the labor force and into school. Work experience greatly increases the probability of current employment at age 18; the effect diminishes at later ages as individuals with advanced education and fewer years of work experience obtain jobs. Blacks are significantly less likely than whites to be employed at age 18, and more likely to be unemployed. By age 24 the racial discrepancy is insignificant. In most cases the coefficients of the market opportunity variables are only marginally significant. Derivatives indicate a weak

trend increasing the likelihood of unemployment from 1968 to 1971 for all ages.

Turning to the female results (Tables 3.14 and 3.15), education has a highly significant positive effect on the probability of employment at all ages. This differs from the male pattern of labor force nonentry at ages 18 and 20, and is consistent with the female's survey year findings. Work experience has a stronger positive impact on the likelihood of employment for females, although the effect declines with age. Black females are less likely to be employed at age 18, more likely at 24. The recession's impact on the mix of activities is surprisingly mild, with derivatives indicating a slight increase in the probability of unemployment and decrease in the probability of employment at all ages.

3.2c Additional Evidence

The need to treat enrollment and labor force decision simultaneously in the framework of a time allocation problem has been generally recognized. Unfortunately, few empirical studies of these decisions are available for comparison with our results. One exception[8] is Stephenson's (1977) study of school and labor force participation decisions of young males, which also analyzes the NLS youth data. Pooling observations from 1966 to 1971 for males who were 14 to 17 years old in 1966, Stephenson estimates transition probabilities between alternative enrollment and labor force states using a multinomial logit model. The dependent variables are similar to our survey week activities, except they are further subdivided

by survey week enrollment status. Stephenson finds that the principal impact of family socioeconomic status is to increase school enrollment rates for both blacks and whites. Completed years of schooling is positively related to current enrollment of blacks; the coefficients are insignificant for whites. Enrollment fell from 1967 to 1969 for whites, with most of the decline among working students. This finding coincides with our survey year estimates. Stephenson also estimates that black enrollment increased modestly from 1967 to 1969. The likelihood that individuals will be unemployed increases somewhat from 1967 to 1969 for whites, and increases substantially over the same period for blacks.

Both Stephenson's analysis and our own work support the validity of a multivariate approach to the study of enrollment and labor force decisions. We have found, for example, that personal and family background characteristics play an important role routing individuals with high status backgrounds toward additional education. This enrollment effect seems to operate independently of race: blacks with similar backgrounds are somewhat more likely to be enrolled than whites. But since fewer blacks are from high status families and able to afford college costs, the average enrollment rate of blacks is well below that of whites. When the college-educated ultimately enter the labor force, they do so without experiencing the high unemployment rates and low wages of those who do not go to college. This interplay between backgrounds, enrollment decisions, and labor market outcomes amounts to a social stratification process which, although not completely inflexible, has important consequences. While our analysis of this phenomenon has been incomplete and we have examined only a few of the determinants of school enrollment and labor

force decisions, it appears that the net effect of this process is a tendency toward continuing economic inequality.

3.3 Determinants of Educational Attainment

Because of the pivotal role education has in determining future labor market outcomes, we take one final look at factors influencing educational decisions, this time examining the impact of family background on educational attainment of 24 year old respondents. The model is similar to that estimated in Section 3.2 and is closely related to models estimated by Masters (1969), Duncan, Featherman, and Duncan (1972), Griliches and Mason (1972), Lerman (1972), Hauser (1973), Parsons (1974), Griliches (1976), and Lazear (1976). Most researchers find that family background variables explain much of the variation in educational attainment; we confirm this fact for NLS data.

Table 3.16 reports linear regression estimates of the impact three family background variables--mother's education, father's socioeconomic status, and number of siblings--have on years of education completed by age 24, controlling for IQ, race, and sex. The sample includes those enrolled in school at age 24, thus reducing possible sample selection bias, and a variable indicating enrollment status is included. As expected, those who are currently enrolled are the more highly educated. Estimates using a sample restricted to the nonenrolled are similar to those reported here, with the exception that estimated race and sex effects are somewhat larger for the nonenrolled.

The significance of the coefficients and the overall explanatory

power of the regression is quite high. Estimated effects of the three family background variables have the expected sign and are highly significant. Mother's education and father's socioeconomic status both have positive impacts on educational attainment. The negative impact of siblings is larger for females. This result is consistent with the hypothesis that the education of females is still viewed as a luxury in many families that is expendable in the face of the competing financial demands of a large family. The estimated difference in educational attainment between black and white males is not significant; black females complete about three-quarters of a year more education than whites when ability and background variables are controlled. The difference in educational attainment between males and females is negligible.

Our results can be compared to studies using National Longitudinal Survey data by Parsons (1974), Kohen and Roderick (1975), Lazear (1976), and Griliches (1976). Parsons, Lazear, and Griliches confine their samples to nonenrolled males, while Kohen and Roderick also study females. All four use regression specifications similar to ours, and their results are reported in Table 3.16. Except for Griliches, none of the studies control for age. In addition, Parsons does not control for race. In spite of differences in specification, the results of these studies are very similar to ours. The impact of siblings is negative and generally significant; the impact of mother's education and father's socioeconomic status is positive. Only Lazear's race coefficient differs in sign from ours.

3.4 Conclusions

This chapter has investigated many of the factors associated with youth educational and labor market decisions, tracing the consequences of those decisions to their subsequent impact on labor market activities in later years. The critical decision is clearly whether to continue formal education. It appears that individuals who go to college have less difficulty making the transition from school to work. High school dropouts experience the greatest difficulty becoming established in the labor market, with extended periods of high unemployment rates. Because blacks, on average, complete fewer years of education, these findings imply that lower skill levels contribute substantially to the severe unemployment problems of minority youth.

This chapter has provided a brief accounting of who is where in the youth labor market, identifying some of the systematic differences between early market entrants and college goers, and between the employed and unemployed. In succeeding chapters, we narrow the focus to employed wage and salary workers, and analyze the processes of wage determination and turnover, and their consequences.

Footnotes to Chapter III

[1]Briefly, the employed (EMP) are persons who, during the survey week, did any work at all as paid employees or in their own business or who worked 15 hours or more as unpaid workers in a family-operated enterprise. Also included are persons temporarily absent from work due to illness, vacation, bad weather, labor-management dispute, or other personal reasons. The unemployed (UNEMP) are persons who did not work at all during the survey week, were available for work (except for temporary illness), and had looked for work during the preceeding 4 weeks. Also included are those who did not work during the survey week and were on temporary layoff or were waiting to begin a new job within the following 30 days. Persons neither employed nor unemployed are classified as out of the labor force (OLF). See U.S. Bureau of Labor Statistics (1976), pp. 6-7, for more details.

[2]As outlined in Chapter II, our recursive model of the youth labor market is applied to each age group sequentially, for a total of 11 iterations for males (ages 18 to 28) and 10 for females (ages 18 to 27). For ease in presenting the results, and with little loss in generality, we confine our discussion in this report to the analysis of ages 18, 20, and 24. Results obtained for other ages are available from the authors. In addition, unweighted data are used throughout the study. This was done partly because sample attrition after the first survey year would require unknown adjustments in the published weights. Moreover, much of our analysis is conducted separately by race and sex, the two key determinants of the sampling weights. Finally, use of weighted data in multivariate analysis does not yield more desirable estimators. See Taubman (1975), pp. 24-25.

[3]Stevenson (1977) reports a similar result.

[4]Kohen and Andrisani also report that the unemployment rate differential tends to decline with age. This difference in conclusions is partly attributable to differences in sample selection and classification procedures. Kohen and Andrisani use educational attainment reported in 1969 regardless of the age of the respondent to classify individuals as dropouts or graduates.

[5]See the appendix to this chapter for a brief technical discussion of the logit formulation.

[6]CJT measures recent attachment to the labor force. A total work experience variable was not available, and age stratification coupled with the inclusion of education makes the usual potential experience proxy (age-education-6) unuseable here.

[7]The effects of completed education and job experience on enrollment and labor force decisions operate through several channels. As we discussed earlier, these variables are important explanators of wage rates, so their estimated impact combines the indirect effect of wages on activity choice with any direct effect of the independent variables themselves. To the extent that these variables are poor proxies for wages rates and other unmeasured determinants of activity choices, observationally equivalent individuals will have different true probabilities of entering alternative enrollment and labor force status. An implication of this heterogeneity problem is that over a period of time the proportion of persons with a greater unmeasured propensity to remain in a given activity state increases. Thus the correlation between years of completed education and current enrollment status, and between years of job experience and current employment status, may grow as the population sorts itself out. A discussion of this mover-stayer problem is contained in Heckman and Willis (1977). See also Stephenson (1977).

[8]Another exception, Mallar (1976), estimates a simultaneous probability model of school and labor force decisions using a probit formulation. Unfortunately, Mallar's model does not overlap our study enough to allow comparisons.

TABLE 3.1

Activities, Selected Ages[a]

AGE	N	Proportion In Survey Year Activities				Proportion In Survey Week Activities			U(%)	P(%)
		WK	SW	SNW	OT	EMP	UNEMP	OLF		
White Male										
18	1868	.19	.66	.12	.03	.63	.09	.28	13.8	72.4
20	1303	.42	.43	.09	.05	.73	.06	.22	7.1	78.2
24	1146	.69	.19	.04	.08	.93	.02	.05	1.8	95.2
Nonwhite Male										
18	844	.28	.54	.13	.05	.64	.14	.23	17.6	77.5
20	515	.61	.25	.06	.08	.78	.09	.13	10.5	87.0
24	338	.83	.02	.07	.08	.89	.06	.05	6.2	95.0
White Female										
18	1395	.36	.37	.15	.12	.46	.11	.44	19.2	66.3
20	1349	.53	.21	.08	.17	.54	.09	.37	13.6	62.8
24	1116	.55	.05	.02	.37	.54	.04	.41	7.3	58.8
Nonwhite Female										
18	660	.32	.25	.23	.19	.33	.18	.49	34.9	51.2
20	597	.53	.15	.07	.25	.48	.13	.39	21.2	60.8
24	371	.63	.04	.02	.31	.56	.08	.36	13.0	64.2

a. The unemployment rate (U) is calculated as:

$$U = UNEMP/(EMP + UNEMP)$$

The labor force participation rate (P) is calculated as:

$$P = EMP + UNEMP$$

TABLE 3.2

Survey Week Activities by Enrollment Status, Selected Ages[a]

AGE	N	Proportion In Survey Week Activities						
		EMP-S	EMP-NS	UNEMP-S	UNEMP-NS	OLF-S	OLF-NS	ENROLLED
White Male								
18	1868	.27	.37	.06	.03	.24	.03	.57
20	1303	.23	.50	.02	.03	.19	.02	.44
24	1146	.11	.82	0.0	.01	.04	.01	.15
Nonwhite Male								
18	844	.19	.45	.07	.06	.18	.05	.44
20	515	.12	.66	.02	.07	.10	.04	.24
24	338	.04	.85	0.0	.06	.01	.04	.05
White Female								
18	1395	.17	.28	.06	.05	.28	.16	.51
20	1349	.11	.43	.02	.07	.15	.22	.28
24	1116	.05	.50	0.0	.04	.02	.39	.07
Nonwhite Female								
18	660	.12	.22	.07	.11	.28	.20	.47
20	597	.09	.39	.02	.11	.11	.29	.22
24	371	.03	.53	.01	.08	.02	.34	.06

a. The proportion enrolled in the survey week (ENROLLED) is calculated by:

ENROLLED = EMP-S + UNEMP-S + OLF-S

TABLE 3.3

Post-School Activities of Males Grouped by Educational Attainment

Age	N[a]	Proportion in Survey Year Activities				Proportion in Survey Week Activities			U(%)	P(%)
		WK	SW	SNW	OT	EMP	UNEMP	OLF		
High School Dropouts										
18	210(.51)	.54	.35	.07	.04	.78	.10	.12	11.4	87.6
20	308(.51)	.84	.04	.03	.10	.86	.10	.04	10.8	96.1
24	270(.36)	.90	.03	0.0	.06	.94	.05	.01	4.9	98.5
High School Graduates										
18	446(.31)	.23	.63	.11	.03	.76	.10	.13	11.9	86.5
20	534(.28)	.75	.13	.03	.08	.89	.06	.05	6.1	94.9
24	492(.21)	.86	.02	0.0	.12	.97	.01	.02	1.2	98.4
College Dropouts										
20	44(.18)	.25	.61	.14	0.0	.75	.05	.20	5.7	79.5
24	242(.12)	.56	.32	.06	.07	.90	.02	.07	2.7	93.0
College Graduates										
24	313(.11)	.39	.45	.13	.03	.87	.02	.11	2.5	88.8

a. Proportion of blacks in parentheses.

TABLE 3.4

Post-School Activities of Females Grouped by Educational Attainment

Age	N[a]	Proportion in Survey Year Activities				Proportion in Survey Week Activities			U(%)	P(%)
		WK	SW	SNW	OT	EMP	UNEMP	OLF		
High School Dropouts										
18	173(.49)	.45	.06	.14	.35	.31	.17	.53	35.4	47.4
20	314(.46)	.49	.04	.04	.43	.33	.14	.53	29.9	46.8
24	268(.37)	.49	.01	.01	.49	.41	.08	.50	16.5	49.6
High School Graduates										
18	457(.32)	.49	.23	.18	.10	.54	.11	.36	16.3	64.3
20	930(.30)	.77	.03	.02	.19	.64	.09	.27	13.0	73.0
24	672(.22)	.59	.02	.01	.38	.53	.04	.43	7.3	57.0
College Dropouts[b]										
21	66(.30)	.62	.21	.09	.08	.61	.14	.26	18.4	74.2
24	203(.24)	.60	.10	.05	.25	.62	.07	.31	10.0	69.0
College Graduates										
24	248(.13)	.65	.17	.05	.13	.77	.04	.20	4.5	80.2

a. Proportion of blacks in parentheses.
b. Classification procedures do not allow identification of the activities of female college dropouts at age 20, since only four years of data are available.

TABLE 3.5

Mean Wages of Workers Grouped by Educational Attainment[a]

Age	Male WK	Male SW	Male EMP	Female WK	Female SW	Female EMP
High School Dropouts						
18	1.88(113)	1.65(74)	1.87(153)	1.30(77)	1.29(11)	1.40(47)
20	2.11(258)	1.81(12)	2.09(242)	1.39(153)	1.30(12)	1.44(89)
24	2.41(243)	2.63(9)	2.46(238)	1.46(132)	.99(2)	1.54(94)
High School Graduates						
18	2.01(104)	1.75(280)	1.90(306)	1.62(224)	1.33(106)	1.55(228)
20	2.44(402)	2.02(72)	2.39(442)	1.77(712)	1.67(29)	1.87(549)
24	2.80(421)	3.23(9)	2.80(425)	1.97(399)	1.86(11)	2.03(318)
College Dropouts[b]						
20	1.96(11)	1.84(27)	1.84(30)			
21				1.89(41)	1.59(14)	2.00(37)
24	3.13(135)	2.75(77)	3.01(196)	2.13(121)	2.34(21)	2.33(115)
College Graduates						
24	3.38(121)	3.08(141)	3.27(245)	2.82(160)	2.46(42)	2.85(174)

a. In dollars per hour. Sample sizes in parentheses.
b. See notes to Table 3.4.

TABLE 3.6

Variables Used in Survey Year Activity Analysis: Ages 18, 20, 24[a]

Variable	Description	Mean by Dependent Variable Category Age 18							
		Males				Females			
		WK	SW	SNW	OT	WK	SW	SNW	OT
RACE (D)[b]	Respondent is nonwhite	.399	.269	.323	.489	.297	.245	.417	.435
IQ	Score on IQ-type test	98.7	103.3	103.4	101.0	100.7	106.4	101.6	99.5
IQC (D)	Control for missing IQ values	.486	.303	.368	.717	.299	.251	.358	.493
EDUC	Years of formal education completed	10.3	11.9	11.7	9.23	11.2	11.6	11.2	10.3
CJT	Continuous years of experience with current or last employer	.363	.298	.650	.739	.317	.353	.201	.113
MED	Mother's education	9.55	10.7	10.8	9.46	10.1	11.6	10.7	9.51
MEDC (D)	Control for missing MED values	.154	.084	.119	.174	.103	.076	.089	.184
DUNCAN	Father's socioeconomic status	25.1	35.2	33.4	24.5	28.5	38.9	31.2	24.8
DUNCANC (D)	Control for missing DUNCAN values	.138	.072	.089	.152	.101	.079	.095	.150
SIBLINGS	Number of siblings	4.03	3.25	3.44	4.77	3.82	3.24	3.79	4.47
1966 (D)	Respondent was indicated age in 1966	.160	.198	.193	.239	--	--	--	--
1967 (D)	Respondent was indicated age in 1967	.205	.196	.214	.163	--	--	--	--
1968 (D)[c]	Respondent was indicated age in 1968	.226	.215	.151	.142	.254	.248	.265	.252
1969 (D)	Respondent was indicated age in 1969	.200	.204	.181	.228	.262	.224	.298	.238
1970 (D)	Respondent was indicated age in 1970	.209	.187	.261	.228	.246	.261	.209	.238
1971 (D)	Respondent was indicated age in 1971	--	--	--	--	.238	.267	.228	.272

TABLE 3.6, Continued

Variables Used in Survey Year Activity Analysis:[a] Ages 20, 24

Variable	Age 20 Mean by Dependent Variable Category: Male WK	Male SW	Male SNW	Male OT	Female WK	Female SW	Female SNW	Female OT	Age 24 Mean by Dependent Variable Category: Male WK	Male ENR	Male OT	Female WK	Female ENR	Female OT
RACE	.364	.188	.206	.364	.304	.242	.264	.394	.263	.105	.217	.276	.213	.214
IQ	98.9	107.9	109.3	99.4	100.1	109.4	107.0	[illegible].9	98.8	108.0	99.7	102.4	109.5	100.4
IQC	.367	.139	.168	.523	.252	.120	.250	[illegible]7	.350	.180	.467	.230	.148	.348
EDUC	10.8	13.8	13.7	10.3	11.7	13.5	13.2	10.7	11.5	15.1	11.3	12.5	14.6	11.3
CJT	.729	.453	.303	.598	.780	.488	.251	.248	1.74	.946	1.93	1.56	1.16	.390
MED	9.59	11.5	11.9	9.44	10.1	11.7	11.5	9.45	9.79	11.8	9.75	10.4	11.7	9.77
MEDC	.166	.059	.065	.140	.118	.074	.068	.150	.204	.095	.175	.138	.074	.154
DUNCAN	26.0	41.0	44.7	26.4	28.4	39.4	40.8	24.1	29.1	45.5	29.7	32.6	42.4	30.0
DUNCANC	.105	.062	.116	.140	.099	.061	.095	.130	.076	.058	.075	.083	.093	.096
SIBLINGS	3.83	2.72	2.48	4.12	3.65	2.94	2.74	4.26	3.34	2.34	3.44	3.24	2.36	3.40
1966	.186	.139	.135	.140	--	--	--	--	.257	.210	.200	--	--	--
1967	.173	.199	.194	.224	--	--	--	--	.213	.231	.242	--	--	--
1968	.155	.233	.167	.178	.268	.220	.277	.314	.214	.223	.175	.231	.296	.294
1969	.189	.221	.239	.215	.246	.229	.216	.225	.166	.156	.175	.223	.130	.244
1970	.297	.208	.265	.243	.252	.274	.243	.199	.150	.180	.208	.253	.204	.218
1971	--	--	--	--	.234	.277	.264	.262	--	--	--	.293	.370	.244

a. For 18 and 20 year olds, the alternative dependent variables are: WK, working and not in school; SW, working and in school; SNW, in school and not working; OT, other. For 24 year olds, the dependent variables are WK, working and not in school; ENR, enrolled in school; OT, other.
b. Variables followed by (D) are dichotomous. They assume the value of 1 if the indicated requirement is met, 0 otherwise.
c. Omitted in estimation.

Table 3.7

Variables Used in Survey Week Activity Analysis: Ages 18, 20, 24[a]

Variable	Description	Mean by Dependent Variable Category Age 18					
		Males			Females		
		EMP	UNEMP	OLF	EMP	UNEMP	OLF
RACE (D)[b]	Respondent is nonwhite	.314	.399	.270	.257	.050	.113
IQ	Score on IQ-type test	101.1	101.1	105.4	102.8	100.9	102.9
IQC (D)	Control for missing IQ values	.370	.417	.332	.267	.327	.369
EDUC	Years of formal education completed	11.4	11.3	11.8	11.4	11.2	11.0
CJT	Continuous years of experience with current or last employer	.544	.052	.079	.532	.050	.113
MED	Mother's education	10.1	10.4	11.2	10.7	10.3	10.6
MEDC (D)	Control for missing MED values	.112	.135	.082	.088	.100	.118
DUNCAN	Father's socioeconomic status	30.2	30.6	38.4	31.7	29.5	32.8
DUNCANC (D)	Control for missing DUNCAN values	.088	.108	.091	.089	.115	.104
SIBLINGS	Number of siblings	3.63	3.50	3.16	3.68	4.00	3.67
1966 (D)	Respondent was indicated age in 1966	.194	.201	.177	--	--	--
1967 (D)	Respondent was indicated age in 1967	.198	.191	.204	--	--	--
1968 (D)[c]	Respondent was indicated age in 1968	.414	.365	.370	.257	.223	.258
1969 (D)	Respondent was indicated age in 1969	.197	.208	.209	.256	.234	.255
1970 (D)	Respondent was indicated age in 1970	.191	.236	.217	.226	.253	.257
1971 (D)	Respondent was indicated age in 1971	--	--	--	.261	.290	.230

Table 3.7, Continued

Variable	Mean by Dependent Variable Category											
	Age 20						Age 24					
	Males			Females			Males			Females		
	EMP	UNEMP	OLF	EMP	UNEMP	OLF	EMP	UNEMP	OLF	EMP	UNEMP	OLF
RACE	.297	.395	.191	.281	.401	.318	.219	.500	.236	.254	.392	.224
IQ	100.5	102.1	109.2	102.3	99.0	102.3	100.5	98.7	105.7	103.3	99.3	101.1
IQC	.294	.277	.185	.208	.313	.315	.319	.500	.361	.229	.354	.305
EDUC	11.8	12.2	13.7	12.1	11.6	11.8	12.1	11.2	13.8	12.8	11.9	11.6
CJT	.747	.034	.120	.957	.076	.184	1.71	.150	.333	1.82	.174	.271
MED	10.2	11.0	11.6	10.5	10.3	10.2	10.1	10.1	11.2	10.5	9.71	9.91
MEDC	.131	.134	.048	.098	.156	.120	.181	.300	.083	.125	.101	.164
DUNCAN	30.8	32.2	43.4	30.8	28.9	30.9	32.4	24.0	37.1	34.2	28.2	30.5
DUNCANC	.090	.134	.083	.094	.104	.101	.071	.075	.083	.083	.063	.098
SIBLINGS	3.45	3.60	2.66	3.39	4.02	3.68	3.15	4.08	2.60	3.13	3.68	3.30
1966	.170	.101	.148	--	--	--	.245	.150	.264	--	--	--
1967	.190	.151	.194	--	--	--	.224	.150	.167	--	--	--
1968	.182	.143	.219	.261	.239	.287	.214	.175	.208	.254	.291	.260
1969	.201	.210	.228	.245	.240	.224	.161	.208	.208	.212	.228	.239
1970	.257	.395	.211	.251	.203	.247	.156	.325	.153	.247	.190	.228
1971	--	--	--	.243	.318	.242	--	--	--	.287	.291	.272

a. The alternative dependent variables are: EMP, employed; UNEMP, unemployed; OLF, out of the labor force.
b. Variables followed by (D) are dichotomous. They assume the value of 1 if the indicated requirement is met, 0 otherwise.
c. Omitted in estimation.

TABLE 3.8

DETERMINANTS OF SURVEY YEAR ACTIVITY: MALES AGES 18, 20, and 24[a]

Variable	Age 18				Age 20			
	$\ln\left\{\frac{Prob\ (SW)}{Prob\ (WK)}\right\}$	$\ln\left\{\frac{Prob\ (SNW)}{Prob\ (WK)}\right\}$	$\ln\left\{\frac{Prob\ (OT)}{Prob\ (WK)}\right\}$	χ^2 (d.f.)	$\ln\left\{\frac{Prob\ (SW)}{Prob\ (WK)}\right\}$	$\ln\left\{\frac{Prob\ (SNW)}{Prob\ (WK)}\right\}$	$\ln\left\{\frac{Prob\ (OT)}{Prob\ (WK)}\right\}$	χ^2 (d.f.)
RACE	.221 (1.61)	.503 (2.73)	.235 (.85)	7.59 (3)	.664 (3.05)	.987 (3.22)	-.161 (.63)	14.13 (3)
IQ	.006 (1.22)	.014 (2.31)	.014 (1.11)	5.90 (3)	.019 (2.91)	.029 (3.25)	.011 (1.09)	12.64 (3)
IQC	.424 (2.97)	.343 (1.84)	.564 (1.73)	9.85 (3)	-.005 (6.03)	.205 (.70)	.457 (1.61)	3.27 (3)
EDUC	.872 (16.41)	.616 (8.73)	-.210 (3.27)	302.98 (3)	1.609 (17.74)	1.505 (13.38)	-.079 (1.33)	325.33 (3)
CJT	-.103 (2.05)	.131 (2.48)	.191 (2.69)	35.55 (3)	-.214 (3.17)	-.375 (3.10)	-.073 (.80)	14.34 (3)
MED	-.027 (1.17)	.039 (1.27)	.108 (2.14)	12.35 (3)	.010 (.30)	.045 (1.01)	.019 (.44)	1.27 (3)
MEDC	-.246 (1.41)	.021 (.09)	-.315 (.94)	3.09 (3)	-.451 (1.63)	-.391 (.97)	-.375 (1.18)	3.81 (3)
DUNCAN	.013 (4.06)	.010 (2.50)	.004 (.60)	16.78 (3)	.009 (2.28)	.015 (2.93)	.002 (.24)	9.07 (3)
DUNCANC	-.479 (2.69)	-.285 (1.17)	-.025 (.07)	7.51 (3)	.369 (1.25)	1.127 (3.15)	.258 (.81)	10.70 (3)
SIBLINGS	.011 (.48)	.018 (.59)	.047 (1.09)	1.35 (3)	.037 (1.06)	-.026 (.49)	.020 (.50)	2.52 (3)
1966	.312 (1.76)	.536 (2.18)	.946 (2.40)	9.21 (3)	-.373 (1.44)	-.096 (.25)	-.458 (1.24)	3.57 (3)
1967	.009 (.05)	.445 (1.90)	.369 (.89)	5.62 (3)	-.255 (1.02)	.002 (.01)	.090 (.27)	1.69 (3)
1969	-.105 (.63)	.142 (.59)	.652 (1.67)	4.76 (3)	-.262 (1.10)	.114 (.34)	.001 (.00)	2.54 (3)
1970	-.450 (2.55)	.288 (1.21)	.535 (1.34)	19.35 (3)	-.879 (3.81)	-.339 (1.05)	-.349 (1.08)	16.30 (3)
Constant	-9.603 (13.71)	-10.276 (10.63)	-3.574 (2.40)	210.01 (3)	-22.414 (18.45)	-24.501 (15.36)	-2.571 (2.16)	365.33 (3)
N				2712			1818	
χ^2 (df)				744.30 (42)			1382.83 (42)	

TABLE 3.8, Continued

Variable	Age 24		
	$\ln\left\{\frac{\text{Prob (ENR)}}{\text{Prob (WK)}}\right\}$	$\ln\left\{\frac{\text{Prob (OT)}}{\text{Prob (WK)}}\right\}$	χ^2 (d.f.)
RACE	-.246 (.95)	-.450 (1.71)	3.56 (2)
IQ	.026 (3.49)	-.003 (.28)	12.69 (2)
IQC	.144 (.69)	.676 (2.78)	7.83 (2)
EDUC	-.511 (11.96)	.003 (.06)	144.78 (2)
CJT	-.204 (3.74)	.049 (1.10)	16.04 (2)
MED	.022 (.67)	.003 (.08)	.45 (2)
MEDC	.013 (.05)	-.222 (.82)	.69 (2)
DUNCAN	.003 (.84)	.003 (.60)	.95 (2)
DUNCANC	.109 (.32)	-.104 (.27)	.20 (2)
SIBLINGS	.011 (.28)	.018 (.46)	.27 (2)
1966	-.013 (.05)	-.039 (.12)	.02 (2)
1967	-.035 (.15)	.318 (1.05)	1.16 (2)
1969	-.139 (.52)	.301 (.92)	1.23 (2)
1970	.116 (.44)	.587 (1.84)	3.45 (2)
Constant	-10.90 (12.29)	-2.56 (2.41)	152.29 (2)
N			1484
χ^2 (df)			485.59 (28)
Ratio Index			.215

t a. t values in parentheses.

TABLE 3.9

DERIVATIVES EVALUATED AT THE MEAN: SURVEY YEAR ACTIVITY, MALES, AGES 18, 20, 24

VARIABLE	AGE 18				AGE 20				AGE 24		
	Prob(WK)	Prob(SW)	Prob(SNW)	Prob(OT)	Prob(WK)	Prob(SW)	Prob(SNW)	Prob(OT)	Prob(WK)	Prob(ENR)	Prob(OT)
RACE	-.042	.003	.039	0.	-.142	.121	.047	-.026	.052	-.019	-.033
IQ	-.001	0.	.001	0.	-.005	.003	.001	0.	-.002	.002	0.
IQC	-.065	.059	.001	.005	-.024	-.013	.010	.027	-.059	.008	.051
EDUC	-.125	.147	-.004	-.017	-.323	.304	.060	-.041	-.044	.049	-.004
CJT	.009	-.037	.024	.005	.053	-.036	-.018	.001	.014	-.020	.006
MED	.002	-.011	.007	.002	-.004	.001	.002	.001	-.002	.002	0.
MEDC	.033	-.050	.020	-.003	.104	-.078	-.013	-.013	.014	.003	-.017
DUNCAN	-.002	.002	0.	0.	-.002	.002	.001	0.	-.001	0.	0.
DUNCANC	.068	-.083	.009	.006	-.113	.050	.059	.004	-.002	.011	-.009
SIBLINGS	-.002	0.	.001	.001	-.006	.008	-.002	.001	-.002	.001	.001
1966	-.057	.011	.033	.013	.084	-.066	.003	-.020	.004	-.001	-.003
1967	-.014	-.042	.050	.006	.039	-.054	.004	.010	-.019	-.006	.025
1969	.007	-.045	.024	.014	.040	-.056	.012	.004	-.009	-.016	.025
1970	.047	-.134	.072	.015	.173	-.167	-.003	-.003	-.050	.006	.044

Table 3.10

Determinants of Survey Year Activity: Females Ages 18, 20, 24[a]

Variable	Age 18				Age 20			
	$\ln\left\{\frac{Prob\ (SW)}{Prob\ (WK)}\right\}$	$\ln\left\{\frac{Prob\ (SMW)}{Prob\ (WK)}\right\}$	$\ln\left\{\frac{Prob\ (OT)}{Prob\ (WK)}\right\}$	χ^2 (d.f.)	$\ln\left\{\frac{Prob\ (SW)}{Prob\ (WK)}\right\}$	$\ln\left\{\frac{Prob\ (SMW)}{Prob\ (WK)}\right\}$	$\ln\left\{\frac{Prob\ (OT)}{Prob\ (WK)}\right\}$	χ^2 (d.f.)
RACE	.633 (4.13)	.888 (5.27)	.130 (.73)	34.64 (3)	.792 (3.65)	.634 (2.34)	-.183 (1.15)	17.89 (3)
IQ	.026 (5.19)	.008 (1.34)	-.003 (.37)	31.26 (3)	.026 (3.61)	.016 (1.73)	-.012 (2.10)	20.32 (3)
IQC	.076 (.53)	.184 (1.13)	.201 (1.09)	1.90 (3)	-.101 (.45)	.727 (2.94)	.275 (1.64)	13.30 (3)
EDUC	.225 (3.43)	-.064 (1.01)	-.363 (6.09)	69.91 (3)	1.730 (.00)	.140 (11.80)	-.271 (5.57)	371.36 (3)
CJT	.106 (1.50)	-.297 (2.51)	-.978 (4.51)	32.36 (3)	-.168 (1.95)	-.803 (4.61)	-.841 (7.67)	76.44 (3)
MED	.132 (5.18)	.099 (3.45)	-.010 (.318)	34.56 (3)	.032 (.93)	.001 (.03)	-.017 (.63)	1.57 (3)
MEDC	-.175 (.87)	-.417 (1.81)	.311 (1.45)	8.90 (3)	.305 (1.05)	-.179 (.47)	-.072 (.37)	1.99 (3)
DUNCAN	.012 (4.24)	.008 (2.35)	-.001 (.22)	21.45 (3)	.002 (.58)	.009 (1.96)	-.005 (1.26)	6.30 (3)
DUNCANC	-.139 (.70)	-.180 (.80)	.215 (.96)	2.94 (3)	-.324 (1.06)	.283 (.84)	.183 (.89)	3.59 (3)
SIBLINGS	-.023 (.93)	-.017 (.62)	.009 (.31)	1.47 (3)	.011 (.30)	-.058 (1.25)	-.002 (.09)	2.15 (3)
1969	-.090 (.55)	-.040 (.22)	-.391 (1.86)	3.62 (3)	-.028 (.12)	-.469 (1.62)	-.569 (3.10)	11.73 (3)
1970	.039 (.24)	-.387 (2.01)	-.279 (1.32)	6.45 (3)	.268 (1.18)	-.308 (1.09)	-.758 (4.09)	2.17 (3)
1971	.117 (.73)	-.242 (1.27)	-.062 (.30)	3.59 (3)	.439 (1.95)	.019 (.07)	-.348 (1.97)	9.45 (3)
Constant	-7.289 (8.02)	-2.022 (2.23)	3.571 (3.87)	107.66 (3)	26.280 (18.89)	20.938 (12.65)	4.331 (5.42)	440.76 (3)
χ^2 (df)				447.41 (39)				1207.12 (39)
N				2055				1946
Ratio Index				.082				.265

TABLE 3.10, Continued

Variable	Age 24 $\ln\left\{\frac{\text{Prob (ENR)}}{\text{Prob (WK)}}\right\}$	$\ln\left\{\frac{\text{Prob (OT)}}{\text{Prob (WK)}}\right\}$	χ^2 (d.f.)
RACE	.385 (1.23)	-.806 (4.80)	26.51 (2)
IQ	.012 (1.32)	-.008 (1.46)	4.53 (2)
IQC	.095 (.31)	.287 (1.81)	3.27 (2)
EDUC	.394 (6.24)	-.192 (5.57)	81.52 (2)
CJT	-.110 (1.57)	-.631 (10.17)	103.88 (2)
MED	-.003 (.07)	-.028 (1.08)	1.18 (2)
MEDC	-.312 (.76)	-.178 (.96)	1.34 (2)
DUNCAN	.002 (.29)	.001 (.24)	.12 (2)
DUNCANC	.417 (1.07)	.097 (.44)	1.21 (2)
SIBLINGS	-.075 (1.31)	-.027 (1.01)	2.45 (2)
1969	-.993 (2.81)	-.475 (2.66)	13.07 (2)
1970	-.693 (2.21)	-.620 (3.48)	14.88 (2)
1971	-.274 (.99)	-.670 (3.90)	15.29 (2)
Constant	-8.090 (7.01)	4.080 (6.40)	103.41 (2)
χ^2 (df)			436.58 (26)
N			1487
Ratio Index			.167

a. The absolute value of asymptotic t-statistics appear in parentheses.

TABLE 3.11

DERIVATIVES EVALUATED AT THE MEAN: SURVEY YEAR ACTIVITY, FEMALES, AGES 18, 20, 24

VARIABLE	AGE 18				AGE 20				AGE 24		
	Prob(WK)	Prob(SW)	Prob(SNW)	Prob(OT)	Prob(WK)	Prob(SW)	Prob(SNW)	Prob(OT)	Prob(WK)	Prob(ENR)	Prob(OT)
RACE	-.144	.078	.096	-.030	-.039	.056	.025	-.042	.151	.027	-.178
IQ	-.004	.005	0.	-.001	0.	.002	.001	-.002	.001	.001	-.002
IQC	-.031	-.002	.019	.014	-.051	-.013	.028	.036	-.060	0.	.060
EDUC	-.007	.067	-.016	-.044	-.101	.121	.054	-.074	.027	.019	-.047
CJT	.050	.078	-.031	-.097	.138	.002	-.026	-.114	.130	.004	-.134
MED	-.022	.023	.007	-.008	0.	.002	0.	-.003	.006	0.	-.006
MEDC	.037	-.024	-.061	.047	-.002	.023	-.008	-.013	.045	-.011	-.034
DUNCAN	-.002	.002	.001	-.001	0.	0.	0.	-.001	0.	0.	0.
DUNCANC	.020	-.027	-.024	.031	-.014	-.026	.011	.029	-.031	.016	.015
SIBLINGS	.004	-.004	-.001	.002	.001	.001	-.002	0.	.008	-.003	-.005
1969	.030	-.003	.008	-.036	.087	.007	-.015	-.079	.123	-.035	-.088
1970	.035	.043	-.056	-.021	.090	.030	-.008	-.112	.144	-.021	-.124
1971	.006	.043	-.043	-.053	.019	.036	.002	-.057	.142	-.002	-.140

Table 3.12

Determinants of Survey Week Activity: Males Ages 18, 20, 24[a]

Variable	Age 18			Age 20		
	$\ln\left\{\frac{\text{Prob (EMP)}}{\text{Prob (OLF)}}\right\}$	$\ln\left\{\frac{\text{Prob (UNEMP)}}{\text{Prob (OLF)}}\right\}$	χ^2 (d.f.)	$\ln\left\{\frac{\text{Prob (EMP)}}{\text{Prob (OLF)}}\right\}$	$\ln\left\{\frac{\text{Prob (UNEMP)}}{\text{Prob (OLF)}}\right\}$	χ^2 (d.f.)
RACE	-.296 (2.36)	.155 (.86)	10.83 (2)	-.358 (1.77)	.180 (.60)	6.31 (2)
IQ	-.016 (4.04)	-.015 (2.42)	16.71 (2)	-.018 (3.18)	-.010 (1.15)	10.29 (2)
IQC	-.118 (.99)	-.052 (.29)	1.00 (2)	-.337 (1.79)	-.391 (1.28)	3.47 (2)
EDUC	-.148 (3.48)	-.161 (2.81)	13.03 (2)	-.537 (10.15)	-.439 (5.85)	102.96 (2)
CJT	1.062 (8.24)	-.344 (1.27)	94.19 (2)	1.138 (7.78)	-1.103 (2.20)	79.50 (2)
MED	-.069 (3.40)	-.032 (1.03)	11.95 (2)	.005 (.18)	.101 (2.18)	5.51 (2)
MEDC	.286 (1.70)	.247 (1.06)	2.92 (2)	.626 (2.15)	.603 (1.53)	4.68 (2)
DUNCAN	-.009 (3.92)	-.007 (1.90)	15.48 (2)	-.008 (2.48)	-.010 (1.89)	7.08 (2)
DUNCANC	-.160 (.97)	-.072 (.30)	.96 (2)	-.298 (1.17)	.251 (.70)	3.90 (2)
SIBLINGS	.013 (.63)	-.024 (.78)	1.95 (2)	-.009 (.26)	.035 (.70)	1.07 (2)
1966	-.261 (1.69)	.336 (1.42)	8.91 (2)	-.200 (.85)	-.252 (.58)	.80 (2)
1967	-.181 (1.22)	.114 (.48)	2.80 (2)	.081 (.37)	-.049 (.13)	.14 (2)
1969	-.184 (1.25)	.224 (.97)	4.45 (2)	.044 (.21)	.313 (.86)	.77 (2)
1970	-.226 (1.47)	.330 (1.39)	7.39 (2)	.248 (1.19)	.866 (2.57)	6.62 (2)
Constant	5.361 (8.58)	2.912 (3.25)	75.51 (2)	10.152 (12.36)	4.615 (3.79)	169.23 (2)
N			2712			1818
χ^2 (df)			360.22 (28)			510.46 (28)
Ratio Index			.076			.196

TABLE 3.12, Continued

Variable	Age 24		
	$\ln \left\{\frac{\text{Prob (EMP)}}{\text{Prob (OLF)}}\right\}$	$\ln \left\{\frac{\text{Prob (UNEMP)}}{\text{Prob (OLF)}}\right\}$	χ^2 (d.f.)
RACE	.369 (1.09)	.338 (.68)	4.21 (2)
IQ	.026 (2.19)	-.025 (1.25)	4.81 (2)
IQC	-.620 (2.10)	-.486 (.92)	4.42 (2)
EDUC	-.174 (3.04)	-.208 (2.29)	9.63 (2)
GJT	.815 (4.77)	-.506 (1.27)	35.39 (2)
MED	-.048 (.93)	.046 (.53)	2.40 (2)
MEDC	.663 (1.45)	.953 (1.58)	2.70 (2)
DUNCAN	.008 (1.28)	-.007 (.62)	3.69 (2)
DUNCANC	-.123 (.26)	-.535 (.68)	.48 (2)
SIBLINGS	.050 (.86)	.105 (1.26)	1.58 (2)
1966	-.384 (1.03)	-.594 (.89)	1.24 (2)
1967	.323 (.79)	.065 (.09)	.79 (2)
1969	-.244 (.61)	.054 (.08)	.64 (2)
1970	.059 (.14)	.959 (1.51)	3.34 (2)
Constant	7.672 (5.70)	3.879 (1.85)	36.38 (2)
N			1484
χ^2 (df)			156.45 (28)
Ratio Index			.166

a. The absolute value of asymptotic t-statistics appear in parentheses.

TABLE 3.13

DERIVATIVES EVALUATED AT THE MEAN: SURVEY WEEK ACTIVITY, MALES, AGES 18, 20, 24

VARIABLE	AGE 18			AGE 20			AGE 24		
	Prob(EMP)	Prob(UNEMP)	Prob(OLF)	Prob(EMP)	Prob(UNEMP)	Prob(OLF)	Prob(EMP)	Prob(UNEMP)	Prob(OLF)
RACE	-.072	.030	[illegible]	-.047	.014	.033	-.011	.004	.007
IQ	-.003	0.	.003	-.002	0.	.002	-.001	0.	.001
IQC	-.022	.003	.019	-.030	-.003	.033	-.012	.001	.012
EDUC	-.022	-.004	.026	-.053	.001	.052	-.003	0.	.003
CJT	.247	-.090	-.157	.169	-.060	-.103	.023	-.007	-.016
MED	-.013	.002	.011	-.002	.003	-.001	-.001	0.	.001
MEDC	.046	.002	-.049	.059	.001	-.060	.011	.002	-.013
DUNCAN	-.002	0.	.001	-.001	0.	.001	0.	0.	0.
DUNCANC	-.030	.004	.026	-.042	.015	.027	0.	-.002	.002
SIBLINGS	.004	-.003	-.002	-.002	.001	.001	.001	0.	-.001
1966	-.075	.042	.034	-.017	-.002	.019	-.006	-.001	.007
1967	-.045	.020	.026	.008	-.001	-.008	.008	-.001	-.006
1969	-.053	.028	.024	-.003	.008	-.005	-.006	.002	.005
1970	-.068	.039	.029	.007	.018	-.026	-.004	.005	-.001

Table 3.14

Determinants of Survey Week Activity: Females Ages 18, 20, 24[a]

Variable	Age 18			Age 20		
	$\ln\left\{\frac{\text{Prob (EMP)}}{\text{Prob (OLF)}}\right\}$	$\ln\left\{\frac{\text{Prob (UNEMP)}}{\text{Prob (OLF)}}\right\}$	χ^2 (d.f.)	$\ln\left\{\frac{\text{Prob (EMP)}}{\text{Prob (OLF)}}\right\}$	$\ln\left\{\frac{\text{Prob (UNEMP)}}{\text{Prob (OLF)}}\right\}$	χ^2 (d.f.)
RACE	-.423 (3.13)	.301 (1.69)	17.33 (2)	.156 (1.10)	.181 (.88)	1.54 (2)
IQ	-.008 (1.74)	-.004 (.70)	3.04 (2)	-.003 (.70)	-.016 (2.23)	4.98 (2)
IQC	-.169 (1.32)	-.267 (1.51)	3.14 (2)	-.337 (2.35)	-.062 (.29)	5.66 (2)
EDUC	.330 (6.19)	.123 (1.87)	38.50 (2)	.108 (2.63)	-.022 (.40)	8.20 (2)
CJT	1.62 (10.80)	-1.60 (3.44)	147.26 (2)	1.59 (14.10)	-1.25 (3.32)	232.82 (2)
MED	-.003 (.12)	-.025 (.82)	.68 (2)	.037 (1.59)	.050 (1.42)	3.51 (2)
MEDC	-.008 (.05)	-.207 (.87)	.80 (2)	-.085 (.48)	.194 (.79)	1.19 (2)
DUNCAN	-.008 (3.10)	-.004 (1.12)	9.68 (2)	-.004 (1.41)	-.001 (.23)	2.03 (2)
DUNCANC	-.015 (.08)	.134 (.59)	.42 (2)	.063 (.34)	-.073 (.26)	.26 (2)
SIBLINGS	.046 (2.05)	.023 (.80)	4.26 (2)	-.0004 (.02)	.010 (.31)	.11 (2)
1969	.520 (3.19)	-.213 (.99)	16.26 (2)	.831 (5.12)	-.058 (.24)	28.96 (2)
1970	.361 (2.42)	.070 (.33)	6.89 (2)	.763 (4.88)	-.269 (1.08)	29.44 (2)
1971	.426 (2.88)	.294 (1.44)	8.69 (2)	.586 (3.75)	.247 (1.08)	14.08 (2)
Constant	-3.405 (4.63)	1.617 (10.82)	21.92 (2)	-2.073 (3.30)	.059 (.07)	12.06 (2)
N			2055			1946
χ^2 (df)			389.28 (26)			551.79 (26)
Ratio Index			.096			.152

TABLE 3:14, Continued

Variable	Age 24		
	$\ln\left\{\frac{\text{Prob (EMP)}}{\text{Prob OLF}}\right\}$	$\ln\left\{\frac{\text{Prob (UNEMP)}}{\text{Prob (OLF)}}\right\}$	χ^2 (d.f.)
RACE	.526 (3.06)	.817 (2.68)	13.30 (2)
IQ	.001 (.20)	-.008 (.76)	.72 (2)
IQC	.169 (1.03)	.326 (1.06)	1.75 (2)
EDUC	.211 (6.10)	.111 (1.72)	37.35 (2)
CJT	1.080 (12.50)	-.493 (1.66)	172.54 (2)
MED	.034 (1.29)	.007 (.140)	1.69 (2)
MEDC	-.012 (.06)	-.681 (1.63)	2.73 (2)
DUNCAN	.001 (.22)	0.0 (.03)	.06 (2)
DUNCANC	-.035 (.16)	-.475 (.95)	.91 (2)
SIBLINGS	.046 (1.64)	.037 (.73)	2.82 (2)
1969	.468 (2.44)	-.310 (.88)	8.04 (2)
1970	.523 (2.79)	-.491 (1.35)	11.74 (2)
1971	.480 (2.69)	-.201 (.62)	8.86 (2)
Constant	-4.238 (6.62)	-2.574 (2.13)	44.26 (2)
χ^2 (df)			527.01 (26)
N			1487
Ratio Index			.208

a. The absolute value of asymptotic t-statistics appear in parentheses.

TABLE 3.15

DERIVATIVES EVALUATED AT THE MEAN: SURVEY WEEK ACTIVITY, FEMALES, AGES 18, 20, 24

VARIABLE	AGE 18			AGE 20			AGE 24		
	Prob(EMP)	Prob(UNEMP)	Prob(OLF)	Prob(EMP)	Prob(UNEMP)	Prob(OLF)	Prob(EMP)	Prob(UNEMP)	Prob(OLF)
RACE	-.117	.044	.074	.032	.004	-.036	.105	.012	-.116
IQ	-.002	0.	.002	0.	-.001	.001	0.	0.	0.
IQ^2	-.031	-.016	.046	-.079	.007	.072	.033	.005	-.038
EDUC	.076	-.003	-.073	.027	-.004	-.022	.046	-.001	-.045
CJT	.467	-.205	-.262	.417	-.105	-.312	.252	-.031	-.222
MED	0.	-.002	.002	.007	.001	-.009	.008	0.	-.007
MEDC	.007	-.017	.011	-.026	.012	.015	.009	-.017	.008
DUNCAN	-.002	0.	.002	-.001	0.	.001	0.	0.	0.
DUNCANC	-.009	.012	-.003	.017	-.005	-.012	0.	-.011	.011
SIBLINGS	.010	0.	-.010	0.	0.	0.	.010	0.	-.010
1969	.137	-.040	-.097	.201	-.027	-.173	.111	-.016	-.095
1970	.092	-.021	-.071	.191	-.035	-.156	.126	-.021	-.105
1971	.093	.007	-.100	.133	-.006	-.127	.112	-.013	-.098

TABLE 3.16

Regression Estimates of Educational Attainment[a]

Independent Variables	Age 24[b] Males	Age 24[b] Females	Age 24[b] Combined	Parsons[c]	Lazear[d]	Griliches[e]	Kohen and Roderick[f] White Males	Kohen and Roderick[f] Black Males	Kohen and Roderick[f] White Females	Kohen and Roderick[f] Black Females
RACE	.149 (1.03)	.746 (5.82)	.454 (4.70)	--	-.721 (3.84)	.43 (2.3)	--	--	--	--
SEX	--	--	-.067 (.91)	--	--	--	--	--	--	--
IQ	.038 (7.99)	.037 (8.87)	.036 (11.56)	--	.056 (13.33)	.049 (15.2)	.051 (11.02)	.031 (4.17)	.038 (7.83)	.021 (2.94)
IQC	-2.017 (15.80)	-1.959 (16.83)	-2.011 (23.25)	--	--	--	--	--	--	--
MED	.257 (11.96)	.202 (10.60)	.228 (15.81)	.180 (1.85)	.150 (6.76)	.116 (7.0)	--	--	--	--
MEDC	-.936 (6.52)	-.790 (5.40)	-.871 (8.47)	--	--	n.a.	--	--	--	--
DUNCAN	.018 (6.51)	.014 (5.79)	.016 (8.67)	.005 (1.78)	--	--	.33 (9.12)	.18 (2.96)	.32 (10.08)	.15 (2.86)
DUNCANC	-.261 (1.25)	-.128 (.73)	-.186 (1.37)	--	--	--	--	--	--	--
SIBLINGS	-.105 (4.64)	-.114 (5.38)	-.108 (6.96)	-.212 (7.83)	-.164[g] (5.32)	-.07 (3.3)	-.07 (2.39)	-.08 (1.99)	-.02 (.81)	-.06 (1.55)
ENROLLED	1.558 (9.28)	1.294 (6.48)	1.537 (12.11)	--	--	--	--	--	--	--
CONSTANT	6.076	6.712	6.537	8.432	6.505	n.a.	4.20	7.97	5.16	9.50
R^2	.505	.435	.470	.27	.311	.365	.30	.21	.31	.17
SEE	2.062	1.850	1.968	n.a.	1.63	1.6	n.a.	n.a.	n.a.	n.a.
N	1504	1480	2984	1067	863	1362	707	161	645	162

a. t statistics in parentheses.
b. The sample is respondents age 24 at any survey year, including those enrolled in school.
c. Parsons (1974), Table 3, line 4. The sample is nonenrolled male youth in 1966. Other variable included in regression: father's education.
d. Lazear (1976), Table 1, column (c). The sample is nonenrolled male youth in 1969. Other variables included in regression. family income, urban residence at age 14, respondent living with parents at age 14.
e. Griliches (1976), Table 4, line 3. The sample is nonenrolled male youth in 1969. Other variables included in regression: culture index, father's occupation when respondent was 14, regional location at age 14, age, and nonresponse control for father's occupation.
f. Kohen and Roderick (1975), Table A2. The sample is respondents age 18 to 25 in 1968 (males) or 1969 (females) who are employed full time as wage and salary workers. Other variable included in regression: index of high school quality.
g. Lazear's variable is actually number of family members.
n.a. Not available.

APPENDIX III.1

Logit Analysis

Two components of the model--status (equation 2.1) and turnover (equation 2.3)--analyze the factors associated with an individual's choice of labor market activities from among several alternatives. The general choice problem can easily be expressed in standard utility maximization terms. The utility of the jth alternative to the ith individual is

$$U_{ij} = U_j(Z_i, X_j, \beta, \varepsilon_{ij}) \qquad \text{(A3.1)}$$

where,

Z_i = vector of characteristics of individual i,

X_j = vector of characteristics of alternative j,

β = vector of parameters,

ε_{ij} = vector of random elements.

The choice of alternative k from among the set of possibilities implies that

$$U_{ik} \geq U_{ij} \text{ for all } j. \qquad \text{(A3.2)}$$

Since we never have information on <u>all</u> the relevant characteristics of either individuals or alternatives, we cannot perfectly predict the choice made by each individual. Instead, we determine the probability that an individual with a given set of characteristics will select a particular alternative. Then the problem is to estimate the vector of parameters, β, that is consistent with the assumption that the chosen alternative most frequently maximizes the average person's utility.

Since the dependent variables are qualitative, indicating whether an activity is chosen, and are therefore discontinuous, the usual least squares assumption of a homoscedastic error term is violated. That is, the error term varies systematically with the explanatory variables, resulting in inefficient estimation of

regression coefficients. Moreover, estimated probabilities based on least squares regression may well fall outside the zero, one range. The solution to this problem of limited dependent variables is to employ maximum likelihood estimation, where the likelihood function incorporates the limit restriction. In a choice problem involving two alternatives the most common procedures are probit (based on the normal probability distribution) and logit (based on the logistic distribution). Choice problems involving more than two alternatives, as in our status and turnover models, can only be estimated practically using multinomial logit procedures (see Nelson, 1976). A more detailed description of the multinomial logit model than will be presented here can be found in Nerlove and Press (1973).

For the sake of convenience, consider a choice problem involving four mutually exclusive and exhaustive possibilities. Suppressing the error term, the probability that the ith individual selects the jth alternative is given by:

$$P_{ij} = \frac{e^{\beta_j X_i}}{\sum_{m=1}^{4} e^{\beta_m X_i}} \qquad \text{(A3.3)}$$

where,

X_i = vector of independent variables associated with the ith individual's choice.

Since one of the four alternatives must be selected, only three of the four sets of coefficients β_m are uniquely defined. We normalize by setting the fourth set of coefficients equal to zero ($\beta_4 = 0$).

Using this normalization individual coefficients can easily be interpreted. Note that, dropping the i subscripts,

$$\ln \frac{P_j}{P_4} = \ln \frac{e^{\beta_j' X}}{e^{\beta_4' X}} = \ln(e^{\beta_j' X}) = \beta_j' X \qquad \text{(A3.4)}$$

Thus β_{jk} is the percentage change in the odds of selecting alternative j relative to selecting alternative 4, for a one unit change in X_k. The marginal effect of X_k on P_j, the probability of selecting alternative j, is given by

$$\frac{\partial P_j}{\partial X_k} = P_j(\beta_{jk} - P_1\beta_{1k} - P_2\beta_{2k} - P_3\beta_{3k}) \qquad \text{(A3.5)}$$

Expression (A3.5) holds as well for alternative 4, when $\beta_{4k} = 0$. Since the probabilities given by (A3.3) must by definition sum to one, the partial derivatives given by (A3.5) must sum to zero over the four alternatives.

In interpreting the logit estimates it is important to remember the interdependence among choices. Our formulation enters all independent variables into the probability expression for every choice. This allows each independent variable to directly affect the relative odds of selecting any of the four choices. However, even if a particular coefficient is estimated to be zero, the probability of that outcome is still affected indirectly by the independent variables's impact on the other probabilities.

Maximum likelihood estimates of the logit model are derived using the Newton-Raphson iterative procedure, as implemented by Bard (1967). Both parameters β_{jk} and derivatives evaluated at the mean are reported for each estimation. Several measures of statistical significance are available. Each parameter has an asymptotic t ratio associated with it. Asymptotic χ^2 statistics test the null hypothesis that all parameters estimated for a given independent variable are zero; an additional χ^2 statistic tests the null hypothesis that all parameters in the estimation (except the constants) are zero. We also report the natural logarithm of the likelihood function when the problem has converged, and the likelihood ratio index, an analog to the multiple correlation coefficient, developed by Domencich and McFadden (1975).

CHAPTER IV

Wage Determination: The Impact of Personal Characteristics, Aggregate Economic Conditions and Market Structure

In this chapter we examine the determinants of interpersonal variation in wage rates by estimating cross-sectional wage regressions for alternative age groups. In the context of our overall model, wage determination is the pivotal component --wage rate is a key indicator of labor market success, and deficiencies in the wage determination process are hypothesized to be an important determinant of dynamic behavior.

The cross-sectional wage (or earnings) regression is an exceptionally versatile and useful construct. It has been pressed into service to analyze such issues as the economic returns to human capital acquisition (Hanoch, 1967; Mincer, 1974; and Griliches, 1976), the nature and magnitude of sex and/or race discrimination (Oaxaca, 1973; Blinder, 1973; Welch, 1973; and Kohen and Roderick, 1975), the effect on wages of structural factors such as industrial concentration and unionization (Weiss, 1966; and Wachtel and Betsey, 1973), and the implicit prices workers pay for training opportunities and/or working conditions (Antos and Rosen, 1975; Thaler and Rosen, 1976; and Brown, 1977). It has also been used to generate predictions of expected or market wages for use in other types of analysis (Kalackek and Raines, 1970; Hall, 1973; and Mellow, 1977). Our use of the cross-sectional wage regression is comprehensive. In this chapter we take a detailed look at estimated parameters, comparing our findings to those of other researchers. We then use these estimates to construct predictions for a worker's market and current wage; these predictions become inputs into subsequent parts of our analysis.

4.1 The Wage Determination Process

A central statement of the competitive theory of labor markets is that, given the overall level of real wages, an individual worker's wage is determined by his productive capabilities--that is, by his innate abilities and investments in human capital. We designate the wage that a worker could be expected to receive, given his capabilities, the "potential wage," and any premium or discount from the potential wage the "market differential." We estimate a model of the wage determination process that sectors current wage into potential and market differential components. Our specification of the model is taken from Kalachek and Raines (1976), and is similar to the many cross-sectional wage regressions estimated by others.

The potential wage is the rental price of those characteristics embedded in the worker. Following the human capital literature, those characteristics are identified as ability, education, current job experience, training, age, health status, plus race and sex. The market differential is the systematically explainable deviations from the potential wage. Market differential variables are geographic location, occupation and industry. These variables attempt to capture premiums and discounts from the human capital or potential wage resulting from disequilibrium in the worker's labor market and from his luck or ability in securing employment in an enclave. Supressing the age variable, the human capital and structural variables are grouped together in the following model of wage determination:

$$W = X_1\beta + X_2\gamma + \varepsilon \qquad (4.1)$$

where,

W = natural logarithm of current wage,

X_1 = matrix of human capital variables,

X_2 = matrix of market differential variables,

ε = vector of error terms, assumed independent of X_1 and X_2.

Estimation of equation (4.1) provides the basis for identifying a worker's potential wage and market differential. The straightforward approach would be to obtain OLS estimates of equation (4.1) and use $\hat{\beta}X_1$ to establish the potential wage and $\hat{\beta}X_1 + \hat{\gamma}X_2$ to establish predicted current wage. However, direct estimation of the equation will not yield consistent estimates of the true coefficients of the human capital variables because of the correlation between human capital and market differential variables. Since more human capital not only results in higher productivity in any specific job, but also routes workers into higher paying jobs, direct estimation of (4.1) will necessarily produce downward biased human capital coefficients. To illustrate the problem more fully, assume that some portion, X_1B, of the variation in the observed measures of the market differential, X_2, is attributable to the operation of human capital variables but that there is a component, X_2^*, uniquely attributable to market differentials themselves (a component by definition independent of X_1), then

$$X_2 = X_1B + X_2^*. \qquad (4.2)$$

Substituting (4.2) into (4.1) yields

$$W = X_1\beta^* + X_2^*\gamma + \varepsilon, \qquad (4.3)$$

where

$$\beta^* \equiv \beta + B\gamma, \qquad (4.4)$$

As (4.4) indicates, the total effect of human capital consists of a direct, β, and an indirect, $B\gamma$, effect. Because X_2^* is not observable, equation (4.3) can not be estimated directly. However, unbiased estimates of the parameters can be obtained by a two stage process. In the first stage, W is regressed on X_1 to obtain consistent and efficient estimates of β^* (by virtue of the independence of X_1 and X_2^*). In the second stage, W is regressed on X_1 and X_2 to obtain consistent and efficient estimates of β and γ.

The (log of the) worker's potential wage is then $X_1\hat{\beta}^*$, the predicted value from the human capital (Stage I) regression. The predicted value from the current wage (Stage II) regression is $X_1\hat{\beta} + X_2\hat{\gamma}$. The worker's systematic market differential is defined as:

$$MD \equiv (X_1\hat{\beta} + X_2\hat{\gamma}) - X_1\hat{\beta}^* \tag{4.5}$$

Because both regressions are log-linear, MD summarizes the deviation of predicted current from potential wage in relative or percentage terms.

A more general specification of the market differential is $W - X_1\hat{\beta}^*$, the residual from the Stage I wage regression (RESID). Assuming that on average market differentials are zero, points on the Stage I regression line can be identified with the potential wage. That is, for a particular worker's endowment of characteristics, the regression gives the estimates of current market prices for elements in the human capital vector. We can thus take the residual as an estimate of the worker's market differential, because it measures the (percentage) deviation between his actual wage and the wage we would predict for him, given his endowment of productive characteristics, from market relationships.

While RESID is a more comprehensive measure of the worker's market differential, it is nevertheless a mélange of components. In addition to the systematic

market differential, RESID includes the effects of market errors in the wage determination process at the worker level, measurement error in the wage variable, worker-specific differences in search efficiency, compensating variations for training opportunities[1] and working conditions, and, to the extent that the human capital vector is underspecified, a potential wage component.[2]

Of course, even with MD we isolate some effects which are really equilibrating phenomena. A few examples come quickly to mind. Regional wage differentials may reflect cost of living differences that, at least for workers, may be equalizing differences. The industry effects may capture unmeasured human capital variation, given the crudeness of the years of schooling and experience measures. The same might be true of the occupation effects. Again these are equalizing differences, not disequilibrium phenomena. The industry and occupation effects might also be crude proxies for working conditions such as pollution and a whole related set of job-consumption attributes. The regional effects might reflect degree of urbanization and journey to work. In sum, we probably claim too much by arguing that MD reflects purely disequilibrium effects: it contains both disequilibrium and equilibrium effects. As a result, our measure of the market differential overestimates actual noncompensating wage differentials. The implications of this overestimate for our analysis are examined in subsequent chapters.

4.2 Empirical Findings

At each age, the wage determination model is estimated for the sample of all wage and salary workers reporting a wage of twenty-five cents an hour or more. All of the variables used in the basic specification of the model, along with their mean values at ages 18 and 24, are presented in Table 4.1. The potential (Stage I) and current (Stage II) wage regressions results for the age 18, 20 and 24 year old samples are reported in Tables 4.2 through 4.4 respectively. Regression results are reported for the combined NLS sample and for separate sex and race subsamples. The outcomes of several experiments with variable, model, and sample specification are reported when appropriate. Since the dependent variable in the wage model is the natural logarithm of current wage, the estimated coefficients are interpreted as the percentage impact of changes in the independent variables on wages.

Many of our findings closely parallel those of other researchers; in such instances we do not discuss our results in great detail. In particular, since countless other studies examine the topics in considerable detail, we do not extensively analyze the economic returns to schooling or calculate detailed measures of "net" sex and race discrimination. It is not the case that these are uninteresting or unimportant topics. Rather, it is simply that several excellent studies on these topics already exist which use NLS youth data. Regarding

the economic returns to education, for instance, the recent work of Griliches (1976, 1977) provides a comprehensive discussion of many of the econometric problems and presents various estimates. Likewise, studies by Flanagan (1974), Cohen and Roderick (1975), and McKay (1975) represent a much more detailed and systematic evaluation of the magnitude and source of race and/or sex discrimination in the wage determination process than we will attempt. A multitude of related studies, using other data sources, also exist.[3]

Classified by major area, our principle findings can be summarized as follows:

4.2a The Impact of Personal Characteristics

1. The potential (Stage I) wage regressions reveal that human capital differences are an important explanation for interpersonal variation in wage rates. Moreover, the results indicate that as the aging process continues and the human capital vector acquires more variability, its ability to "explain" wage differences increases proportionally. At age 18, for example, the R^2 for the potential wage regression is only .17, but by age 24 it increases to .32.

2. Consistent with the findings of everyone else, we find that education has a large, significant and positive impact on wages. The impact increases slightly with age and is greater for females and nonwhites.[4]

3. Since the wage regressions we estimate are stratified by age and control for years of education (EDUC), including a measure of potential experience (PEX) would result in a linear dependency:

$$PEX \equiv AGE - EDUC - 6, \tag{4.6}$$

where AGE is a constant in each regression. PEX contains several elements:

$$PEX \equiv CJT + OE + U + OLF, \tag{4.7}$$

where CJT is current job experience; OE is other experience; U is unemployed time; and OLF is out-of-the-labor force time.

At early ages, of course, CJT approximately equals PEX, but as workers age, CJT and PEX diverge. For males the gap consists for the most part of other (non-current) job experience: PEX - CJT approximates OE. For females, a larger portion (which grows with age) of the divergence can be attributed to nonschool, out-of-the-labor force time: PEX - CJT approximates OLF more and more as females age. With the sample stratified by age and controlling for education, the coefficient of CJT indicates the value of recent job experience relative to other nonschool activities. One would expect, therefore, that the coefficient for CJT would be largest for older females in our sample. This is exactly what we find.[5] At age 24, for example, the CJT coefficient is a highly significant .048 in the female regression compared to an insignificant .004 in the males regression. (Note that in Table 4.1 the mean value of CJT is approximately equal for males and females at age 24).

4. Ability (as measured by the IQ variable),[6] "self-confidence" (as measured by ATT the score on the Rotter test of Internal-External control) and health status (HFP)[7] typically have the anticipated impact on wages. However, coefficients are frequently insignificant and the change in wages implied by large variations in the independent variables is rather modest.

5. Taking a vocational program in high school (VOC) or a formal training program (TRAIN) has a positive impact on wages: The effect of a training program is greatest for black females, where it increases wages by 10 percent at age 18

and 17 percent at age 20. At age 18, a training program has no significant impact on the wages of the other sex-race groups; by age 24 it has a significant impact for all except black males. Taking a vocational program in high school initially benefits white females the most, increasing wages by 8 percent at age 18. At age 24, the vocational training program variable has a significant coefficient in only the white males regression, where a 9 percent increase in wages is indicated.[8]

We experimented with specification of the training variable without great success. Replacing TRAIN with DTRAIN, duration of training in months (adjusted for intensity), the estimated coefficient is positive, but less significant than that of TRAIN. (At age 24, for instance, DTRAIN has a coefficient of .007 with a t-value of 3.26 for the full sample.)

6. Married workers receive a wage premium that declines sharply with age. Disaggregating by sex reveals that married males receive a large premium that declines only modestly with age while females begin with a small premium that turns into a discount and becomes successively more negative after age 19.

7. The potential wage regressions include a control variable indicating that a respondent is currently enrolled in school. Its coefficient is negative and highly significant, indicating a wage discount of roughly 17 percent at age 18 and 10 percent at age 24. If we do not include the enrolled variable, the coefficients of the training variable increase and those of the IQ variable decrease dramatically; they are turned into proxies for enrollment status.[9] If equations are estimated separately for the nonenrolled, the results are not seriously altered.

The impact of school enrollment on the wage rates of male youth has also been examined by Parsons (1974) and Lazear (1977). Both studies use NLS data and obtain results that are comparable to ours. Lazear attributes the lower earnings of enrolled youth to equalizing differences--"students optimally choose more flexible and easier jobs at the cost of lower wages" (p. 175).

4.2b The Impact of Aggregate Economic Conditions

Figures 4.1a through 4.1d chart the estimated coefficients of the market opportunity variables. Recall that the 1968 variable is omitted in estimation;[10] consequently, the estimated coefficients of the other variables indicate how real wages vary by year, relative to 1968, standardizing for the age and skill level of the respondent.[11] A secular upward trend in labor productivity would argue for rising real wages over time--that is, negative coefficients on the year variables before 1968 and positive coefficients after 1968.

The findings are quite interesting. For males, real wages--standardized by age and skill level--increased dramatically during the boom period of the late 1960's. When aggregate labor market conditions deterioriated in 1970, however, real wages stagnated for older workers (aged 22-26) and actually declined for younger workers.

Several researchers, including Freeman (1973), and Smith and Welch (1976), have documented and commented on the dramatic improvement in the economic position of blacks during the last half of the 1960's. As Figure 4.1b indicates, we also find that during this period real wages of black males increased dramatically. Moreover, because we control for variation in human capital, this increase is net of any improvements in the acquisition of human capital of blacks

relative to whites that occurred during the period. Finally, while Freeman (1973) and others find that black incomes are much more cyclically sensitive than whites, our results indicate that this sensitivity does not come from a widening of wage differentials during the economic downturns among those who are employed, at least for the time period and age group we examine.

For females, we find that real wages increased sharply in 1969, and stagnated in 1970 and 1971. The increase in 1969 is particularly noticeable for black females. The real wage of an 18-year-old black female increased by 18 percent between 1968 and 1969; the increase at age 24 was 24 percent during the same one-year period.

4.2c The Impact of Market Structure

1. Controlling for measurable human capital, race, sex, enrollment status, and the state of aggregate economic conditions, the structural variables have a massive impact on wages. When they are added to the set of independent variables the R^2 is increased by about .20 at each age. By age 24, the current (Stage II) wage regression accounts for fully one-half of the interpersonal variation in wage rates.

2. The magnitudes of specific occupational, industrial and locational premiums or discounts are substantial. For workers the data identify as otherwise identical, wages vary by up to 20 percent depending on locational differences and up to 50 percent for occupational and locational differences. Workers living in SMSAs receive wage premiums of roughly 10 percent, with no systematic difference for being in a central-city as opposed to elsewhere within a SMSA. Major discounts are associated with working in the South, particularly for black males. Professional and managerial workers receive the largest premium; service workers, the largest discount. Transportation and communications is the industry group with the

largest premium; agriculture, the largest discount.

3. The estimated impact of the human capital variables on wages declines by 20 to 40 percent for males and 40 to 60 percent for females when we include structural variables in the regression. This decline suggests that education and training play important indirect roles in routing workers i[illegible]aying occupations and industries. We also find that, controlling for occupation and industry, the magnitude of estimated sex and race discount declines sharply.[12] In other words, blacks and females are denied equal access to higher paying jobs.[13]

4.3 Further Evidence

4.3a Union Membership and Wage Rates

The NLS did not obtain information on union membership until 1969 (1970 for females). Consequently, we are unable to include any union membership variables in the age stratified regressions. What we can do, however, is estimate the wage model for wage and salary workers employed in 1970, adding years of age (AGE) to the human capital vector and union membership (distinguished by three dichotomous variables indicating membership in an industrial (INDU), craft (CRFU), or government, white-collar, or miscellaneous (GVU) union) to the vector of market differential variables.

Regression results with the sample stratified by sex are reported in Table 4.5. The estimated union premium is substantial, particularly if the worker is a member of a craft union where the premium is about 30 percent. We do not find a significant difference in the magnitude of the premium by sex, although the proportion of females who are union members is much smaller.[14]

4.3b Wage Determination for Youths and Adults: A Comparison

We can compare the results from the combined ages sample with results from the age stratified samples. As expected, in the combined ages regressions, the age variable has a sizeable positive coefficient. Controlling for schooling,

age functions as a proxy for potential experience. For males, a year of potential experience has a slightly smaller impact than a year of education. For females, education is decisively more important to wages than potential experience, confirming in a different context our earlier finding that potential seriously overstates actual experience for females. The other coefficients in both stages of the regressions are exceptionally robust under the earlier specification.

Kalachek and Raines (1976) use the mature-males data for 1969 to estimate essentially the same wage determination model. Our results with the youth data are remarkably similar to theirs, the major difference being that we do not find a lower return to schooling for blacks. (They included a race-education interaction variable, and its estimated coefficient was -.019 with a t-value of 4.35. If we include such a variable (not shown) its coefficient is .004 with a t-value of .6). A minor difference in results is that our estimates of occupational and industrial premiums are somewhat smaller, while union membership premiums are slightly higher.

4.3c Race, Sex, and Wage Growth

In Figure 4.2, we have stratified the sample of wage and salary workers employed in 1970 by age, race and sex, calculated the mean hourly wage for each group, and charted the results.

In contrast to our earlier discussion, which examined how wages at a given age vary over time, here we look at how wages at a given time vary with age. The figure indicates very clearly a source of major concern: only white males make major progress during the age 18-28 period. In fact, the average hourly wage increases by only about fifty cents between ages 18 and 28 for the other three groups. Results from the wage regressions indicate several possible factors contributing to the extremely flat age-wage growth curves for blacks and females.

First, blacks have less schooling than whites. The effect of this is two-fold. More whites than blacks are enrolled while working (see Table 4.1). Since we find that being enrolled in school is associated with a lower wage during the years of heavy enrollment (ages 18-22) wages are pushed down more than proportionally for whites. However, by their middle twenties, whites emerge with significantly more education (the average white male, for instance, has a 1.9 year advantage over the average black male at age 24). Given our finding that a year of education increases wages by more than a year of general experience, the slope of the wage curve is increased at older ages.

Second, there is a growing divergence between actual and potential experience for females (as implicitly documented by the increasing significance with age of the current-job-tenure variable in the female-age stratified regressions and the poor performance (relative to males) of the age variable in the females-all ages regression). This suggests that less "investment" in market work by women may be an important factor contributing to the widening of the male-female wage gap with age.

Finally, the regression results indicate that specific occupations and industries pay various discounts or premiums, and that blacks and females are systematically denied equal access to those with large premiums. Very few blacks or females become managers and almost no females become craftsmen or work in construction, all activities that pay substantial premiums. The occupational-industrial distribution at ages 18 and 24, reported in Table 4.1, reveals a dramatic improvement in the occupational position of white males compared to that of the other groups. Of course, some of the improvement--the great increase in the percentage who are professional workers, for instance--results from those

enrolled at age 18 completing their education and moving into the labor market.

4.4. Conclusions

We have estimated a straightforward specification of the standard cross-sectional wage model. In general, our results confirm what is already well known. Investments in human capital are productive, significantly increasing one's wage. Controlling for measured differences in productive capabilities, blacks and women receive substantial wage discounts, but during the late 1960's, blacks effectively narrowed the differential. We also find that, net of measured variations in worker quality, specific occupations and industries pay premiums or discounts. Although human capital is important in routing individuals into high paying sectors, blacks and women are, nevertheless, systematically denied equal access and this is responsible for a large part of race and sex differentials. Finally, we find a surprising decline in real wages among workers employed during the recessionary period of the early 1970's.

In this chapter we have empirically identified the market differential in a static setting. However, its existence at any one time implies nothing substantive about the competitiveness of the labor market. Simply knowing that some workers receive wages inconsistent with their capabilities does not necessarily invalidate the competitive model. The labor market is not a bourse where adjustments are instantaneous. A more appropriate test is whether market differentials persist over time; whether they stimulate equilibrating behavior which results in their liquidation, or resist erosion because of segmentation or balkanization of the youth labor market. Subsequent chapters provide such tests.

Footnotes to Chapter IV

[1]Rosen (1972), for example, contends that workers implicitly purchase learning opportunities through wage reductions. "The difference between the market rental of a worker's existing skill and his actual wage is the shadow or implicit price he pays for learning" (p. 328). For young workers, it is especially likely that wages are being foregone to obtain training oppportunities. The magnitude of the error caused by this omission is reduced when we use the instrumental variable approach to define the market differential.

[2]Recent research examining the residual variation in earnings suggests that the proportion of unexplained variance attributable to underspecification of the human capital vector may be quite large. Lillard (1977), for example, using NBER-TH data estimates a variance component earnings model that sectors the residual variation in earnings into permanent and transitory components and finds that unspecified worker-specific factors account for 57 percent of residual variance. (Lillard's human-capital earnings regression explains 30 percent of the variation in annual earnings.)

[3]For an extensive review of the topic, see the recent surveys by Kohen(1975), Kahne(1975), and Marshall (1974).

[4]Studies using data from earlier time periods typically find higher returns to schooling for whites (Hanoch, 1967, and Weiss, 1970). More recent evidence, however, suggests that this is no longer true (Weiss and Williamson, 1972, and Welch, 1973), that there has been a sharp convergence in black and white returns to schooling, particularly for younger workers.

[5]For a detailed examination of the impact that discontinuities in labor market experience have on female earnings, see Mincer and Polachek (1974).

[6]In the NLS the IQ variable is constructed from scores on various alternative tests as recorded in the respondents' high school records. The test results thus refer to a period that in most cases precedes the completion of formal schooling. Unfortunately, however, IQ scores are missing for many respondents (the exact missing value rates are given in Table 4.1). Moreover, the non-availability rate is systematically related to race and sex. In dealing with the nonresponse problem, we assign mean values and denote the respondent with a dichotomous variable. In extensive experimentation, Griliches (1976) found that this selectivity problem did not seriously bias the results for young men. Also Griliches and others who estimate wage regressions with the NLS data frequently use scores from a "knowledge of the world of work" (KNW) test administered within the NLS as an alternative ability measure. We did not use the KNW variable because the test on which it is based is not the same for males and females. (For an analysis of the determinants and implications for labor market success of scores on the occupational information test (KNW), see Parnes and Kohen (1975)).

[7]Construction of the ATT and HFP variables was complicated by the timing of the relevant survey questions. The Rotter test which was used to construct ATT was first administered to the males in 1968 and the females in 1970. Consequently, for males the indicated age in 1966 or 1967 and females the indicated age in 1968 or 1969, ATT scores were determined by their responses in 1968 and 1970 respectively. To the extent there is attrition in the two samples, the dummy variable indicating

a nonresponse to the Rotter questions becomes a proxy for being the indicated age in 1966 or 1967 for males and 1968 or 1969 for females. Additionally, there is a potential problem of reverse causation in that responses to the Rotter questions may be influenced by previous economic status. See, Andrisani and Nestel (1974) for an extended analysis of the later problem. The problem with HFP is that health status was not ascertained every survey year. In constructing HFP, we implicitly assume that health status did not change during years in which no questions were asked.

[8]In estimating the impact that vocational and training programs have on wages, what we may in fact be observing is a selection effect: Those who receive training may be significantly more able than those who do not.

[9]The NLS obtained training information only if the respondent was not enrolled. Also, recall the estimated influence IQ has on educational attainment in Chapter III.

[10]Unfortunately, the timing of the male and female surveys was not coincident. For a given calendar year, males were interviewed during the final quarter, females during the initial quarter. Thus, for instance, in the 1968 survey year females were interviewed a full 9 months before males. Since wages were deflated by price level figures for the relevant quarter, however, the impact of this discrepancy should be small. If real wages are increasing over time, the effect will be to overestimate slightly the extent of sexual discrimination.

[11]In addition to capturing cyclical effects, with age held constant the year dummies also capture any "vintage" effects.

[12]The decline in the race coefficient still is present if we omit the locational variables. In noting the decline in the race coefficient, recall that we include a RACE-SOUTH interaction term (RSOUTH) in the Stage II specification. If RACE entered as a single variable in Stage II, its coefficient would be:

$$\hat{\beta}_{(RACE)} + \hat{\beta}_{(RESOUTH)} \times \overline{SOUTH}$$

where

$\overline{SOUTH}$ is the mean of SOUTH.

[13]This conclusion--that it is a concentration of blacks and females in low paying jobs and not unequal pay for equal work that is responsible for large portions of the net male-female or white-black wage differential--is in agreement with that of other researchers. See, for example, Oaxaca (1973) and Blinder (1973).

[14]The determinants of male-female differentials in union membership are examined in the appendix to this chapter.

[15]For similar evidence with the NLS sample restricted to youth who did not go on to college, see Parnes and Kohen (1976).

TABLE 4.1

Variables Used in Wage Regression

Variable	Description	Age 18				Age 24			
		Males		Females		Males		Females	
		Whites	Nonwhites	Whites	Nonwhites	Whites	Nonwhites	Whites	Nonwhites
Human Capital Variables (X_1)									
RACE (D)[a]	Respondent is nonwhite.	0.0	1.	0.0	1.	0.0	1.	0.0	1.
SEX (D)	Respondent is female.	0.0	0.0	1.	1.	0.0	0.0	1.	1.
IQ	Score on IQ-type test.	104.6	95.3	106.1	95.3	101.6	95.1	105.6	95.5
IQC (D)	Control for missing IQ values.[b]	.27	.53	.21	.46	.24	.58	.15	.41
ATT	Scaling of responses to an abbreviated version of the Rotter Test of Internal-External Control. Measures the extent to which the individual believes he can control his destiny. The lower the score, the greater is the belief of self-control.	22.82	23.70	23.22	23.54	21.48	24.00	22.54	23.36
ATTC (D)	Control for missing ATT values.[b]	.21	.22	.09	.12	.21	.22	.12	.14
EDUC	Years of formal education completed.	11.76	10.95	11.57	11.01	12.59	10.68	13.02	11.86
MST (D)	Respondent is married.	.08	.09	.16	.12	.72	.61	.69	.55
TRAIN (D)	Respondent ever enrolled in a formal training program.	.13	.14	.14	.22	.42	.25	.53	.48
VOC (D)	Respondent ever enrolled in a vocational program in high school.	.14	.17	.22	.19	.11	.11	.24	.16
CJT	Continuous years of experience with current or last employer.	.36	.24	.38	.22.	1.67	1.46	1.69	1.16
HFP (D)	Respondent's health status is fair or poor.	.14	.09	.05	.06	.14	.09	.06	.06
ENROLL (D)	Respondent enrolled in formal education program.	.54	.41	.49	.43	.14	.05	.08	.06
Market Opportunity Variables[c]									
1966 (D)	Respondent was indicated age in 1966.	.20	.16	-	-	.25	.24	-	-
1967 (D)	Respondent was indicated age in 1967.	.20	.20	-	-	.22	.20	-	-
1968 (D)[d]	Respondent was indicated age in 1968.	.20	.25	.26	.21	.23	.17	.24	.20
1969 (D)	Respondent was indicated age in 1969.	.20	.21	.23	.29	.16	.19	.22	.21
1970 (D)	Respondent was indicated age in 1970.	.20	.19	.25	.25	.15	.20	.24	.27
1971 (D)	Respondent was indicated age in 1971.	-	-	.25	.25	-	-	.29	.32

TABLE 4.1 (Con't.)

Variables Used in Wage Regression

Variable	Description	Age 18				Age 24			
		Males		Females		Males		Females	
		Whites	Nonwhites	Whites	Nonwhites	Whites	Nonwhites	Whites	Nonwhites
Structural Variables (X_2)									
Occupation:									
PROF (D)	Professional and technical workers	.05	.03	.01	.05	.22	.07	.27	.12
MANG (D)	Managers and officials	.02	.01	.01	.01	.09	.02	.02	0.0
SALES (D)	Clerical and sales workers	.16	.13	.57	.45	.14	.08	.45	.30
CRAFT (D)	Craftsmen and foremen	.11	.06	.01	0.0	.19	.15	.01	.02
OPER (D)	Operatives	.30	.32	.11	.16	.25	.35	.12	.26
LABOR (D)	Laborers, including farm laborers	.24	.27	.01	.01	.07	.21	.01	0.0
PHSU (D)[d]	Private-household service workers and occupation not reported	.13	.18	.29	.32	.05	.12	.12	.29
Industry:									
AGRI (D)	Agriculture and forestry	.05	.05	.01	.02	.02	.05	0.0	.01
CONSTR (D)	Mining and Construction	.12	.08	0.0	0.0	.11	.11	.01	0.0
MFG (D)	Manufacturing	.28	.33	.16	.13	.35	.39	.22	.27
TRANS (D)	Transportation and Communication	.05	.06	.04	.05	.08	.07	.05	.03
TRADE (D)	Whole and Retail Trade	.30	.21	.36	.23	.17	.15	.14	.11
FIN (D)	Finance, Insurance, and Real Estate	.09	.12	.24	.31	.17	.11	.43	.38
SERV (D)	Services	.07	.10	.15	.16	.04	.07	.04	.15
PA (D)[d]	Public Administration and industry not reported	.04	.05	.03	.10	.07	.04	.07	.05
Location of Current Residence:									
CCITY (D)	Respondent lives in SMSA (central city)	.24	.50	.25	.51	.30	.51	.30	.52
NCITY (D)	Respondent lives in SMSA (not central city)	.32	.15	.34	.16	.35	.12	.35	.15
EAST (D)	Eastern region	.26	.13	.24	.20	.22	.14	.22	.12
WEST (D)	Western region	.14	.07	.15	.07	.19	.06	.19	.11
SOUTH (D)	Southern region	.30	.63	.27	.51	.30	.65	.30	.57
RSOUTH (D)	Race-south interaction variable	0.0	.63	0.0	.51	0.0	.65	0.0	.57
NORCEN (D)[d]	North-central region	.31	.18	.34	.22	.29	.15	.29	.20
Dependent Variable (W)									
LWAGE	Natural logarithm of current wage	.53	.46	-.28	.27	1.00	.67	1.09	.50

a. Variables followed by (D) are dichotomous. They assume the value 1 if the indicated requirement is met, 0 otherwise.
b. Nonrespondents are assigned the mean value of the variable for valid responses and then denoted by a dichotomous variable.
c. In estimation, these variables are included with the human capital variables in the Stage I regression.
d. Omitted in estimation.

Table 4.2
Stage I and Stage II Wage Regressions: Age 18

Independent Variables	Males						Females						Full Sample					
	Black		White		Combined		Black		White		Combined		Black		White		Combined	
	I	II	I	II	I	II	I	II	I	II	I	II	I	II	I	II	I	II
	(1)	(2)	(3)	(4)	(5)	(6)	(7)	(8)	(9)	(10)	(11)	(12)	(13)	(14)	(15)	(16)	(17)	(18)
EDUC	--	--	--	--	-.030 (1.58)	.048 (1.89)	--	--	--	--	.047 (1.82)	.042 (1.42)	--	--	--	--	-.003 (.18)	.055 (2.78)
SEX	--	--	--	--	--	--	--	--	--	--	--	--	-.270 (9.17)	-.239 (8.30)	-.287 (15.01)	-.217 (10.74)	-.281 (17.58)	-.224 (13.63)
IQ	.003 (2.40)	0. (.04)	.002 (2.34)	.002 (2.05)	.002 (2.66)	.001 (1.82)	.004 (1.98)	.002 (1.18)	.004 (3.39)	.002 (2.40)	.003 (2.92)	.002 (2.01)	.003 (2.95)	.001 (.90)	.003 (4.06)	.002 (3.26)	.002 (3.89)	.001 (2.79)
IQC	-.112 (3.03)	.017 (.56)	-.002 (.08)	.016 (.68)	-.036 (1.81)	.005 (.29)	-.124 (2.48)	-.053 (1.14)	.068 (2.14)	.053 (1.89)	.003 (.13)	.013 (.56)	-.120 (4.04)	-.027 (1.04)	.021 (1.09)	.030 (1.71)	-.025 (1.60)	.005 (.32)
ATT	-.002 (.61)	-.002 (.80)	-.001 (.44)	0. (.20)	-.001 (.75)	0. (.16)	.007 (1.53)	.004 (.90)	.002 (.68)	.002 (.88)	.004 (1.66)	.003 (1.43)	.002 (.69)	0. (.12)	0. (.11)	.001 (.80)	.001 (.41)	.001 (.77)
ATTC	.060 (1.64)	.023 (.77)	-.028 (1.15)	-.004 (.18)	0. (0.)	.006 (.33)	.023 (.36)	.003 (.05)	.002 (.04)	-.033 (.93)	.010 (.28)	-.025 (.83)	.050 (1.59)	.029 (1.05)	-.020 (.94)	-.018 (.96)	.001 (.08)	-.004 (.27)
EDUC	.055 (5.94)	.036 (4.56)	.052 (5.95)	.038 (4.69)	.055 (8.69)	.038 (6.69)	.069 (4.59)	.039 (2.69)	.074 (5.36)	.039 (1.36)	.074 (7.45)	.039 (4.32)	.056 (7.27)	.035 (5.05)	.057 (7.75)	.039 (5.74)	.059 (11.19)	.038 (7.94)
MST	.175 (3.39)	.150 (3.48)	.197 (5.43)	.180 (5.49)	.192 (6.47)	.167 (6.40)	.083 (1.31)	.055 (.96)	-.035 (.99)	0. (0.0)	-.003 (.10)	.013 (.49)	.129 (3.25)	.117 (3.37)	.066 (2.65)	.086 (3.79)	.086 (4.04)	.092 (4.89)
TRAIN	.003 (.05)	-.040 (1.09)	.043 (1.37)	.024 (.86)	.030 (1.18)	.007 (.30)	.100 (1.87)	.053 (1.09)	-.003 (.09)	.002 (.05)	.033 (1.09)	.026 (.97)	.039 (1.16)	0. (0.)	.033 (1.37)	.018 (.81)	.040 (2.03)	.017 (.95)
VOC	.042 (1.68)	.030 (.96)	.007 (.26)	-.012 (.45)	.017 (.76)	-.002 (.08)	.031 (.58)	-.016 (.33)	.084 (2.84)	.041 (1.58)	.076 (2.95)	.024 (1.03)	.043 (1.40)	.028 (1.06)	.045 (2.17)	.016 (.86)	.042 (2.47)	.015 (.98)
OJT	-.054 (3.05)	-.036 (2.42)	-.015 (1.55)	.004 (.44)	-.023 (2.82)	-.004 (.58)	-.033 (.81)	-.069 (1.89)	-.006 (.41)	-.001 (.06)	-.010 (.72)	-.010 (.77)	-.053 (3.26)	-.040 (2.83)	-.012 (1.52)	-.002 (.28)	-.021 (2.88)	-.007 (1.02)
HFP	-.025 (.51)	-.048 (1.17)	-.017 (.60)	-.027 (1.08)	-.018 (.72)	-.034 (1.63)	-.090 (1.08)	-.060 (.80)	-.112 (2.18)	-.095 (2.10)	-.100 (2.28)	-.092 (2.40)	-.053 (1.23)	-.059 (1.59)	-.037 (1.52)	-.040 (1.84)	-.037 (1.74)	-.046 (2.47)
ENROLL	-.194 (3.[illegible])	-.111 (3.7[illegible])	-.175 (7.[illegible])	-.10[illegible] (4.79[illegible])	-.191 (9.18)	-.10[illegible] (5.9[illegible])	-.105 (2.26)	-.072 (1.64)	-.165 (5.72)	-.086 (3.34)	-.146 (5.97)	-.082 (3.76)	-.161 (6.05)	-.098 (4.13)	-.1[illegible] (9.40)	-.09[illegible] (5.7[illegible])	-.165 (10.[illegible])	-.093 (6.79)
1966	-.088 (1.88)	-.096 (2.50)	-.057 (1.82)	-.072 (2.52)	-.067 (2.56)	-.075 (3.28)	--	--	--	--	--	--	-.059 (1.30)	-.069 (1.78)	-.072 (2.52)	-.070 (2.72)	-.066 (2.75)	-.067 (3.14)
1967	-.119 (2.68)	-.112 (3.07)	-.038 (1.23)	-.041 (1.47)	-.063 (2.52)	-.060 (2.74)	--	--	--	--	--	--	-.083 (1.95)	-.078 (2.14)	-.049 (1.77)	-.039 (1.54)	-.062 (2.64)	-.051 (2.44)
1969	.048 (1.14)	.052 (1.50)	.011 (.37)	-.006 (.22)	.023 (.92)	.011 (.51)	.175 (2.96)	.102 (1.92)	-.018 (.53)	.012 (.41)	.033 (1.14)	.034 (1.32)	.095 (2.80)	.080 (2.74)	-.008 (.36)	-.004 (.20)	.024 (1.29)	.019 (1.15)
1970	-.004 (.09)	-.030 (.82)	-.047 (1.44)	-.040 (1.38)	-.030 (1.14)	-.034 (1.49)	.133 (2.13)	.084 (1.50)	-.077 (2.35)	-.039 (1.36)	-.028 (.96)	-.009 (.34)	.044 (1.22)	.026 (.86)	.070 (3.06)	-.047 (2.31)	-.034 (1.76)	-.026 (1.54)
1971	--	--	--	--	--	--	.146 (2.33)	.124 (2.20)	-.018 (.55)	.017 (.59)	.023 (.78)	.042 (1.66)	.099 (1.95)	.103 (2.34)	-.008 (.26)	.015 (.56)	.022 (.86)	.038 (1.65)

FEDF	--	.185 (2.35)	--	.132 (2.83)	--	.128 (3.25)	--	.011 (.12)	--	.367 (4.31)	--	.190 (3.23)	--	.118 (2.02)	--	.204 (5.11)	--	.175 (5.37)
MANG	--	.165 (1.05)	--	.193 (2.76)	--	.182 (2.92)	--	.172 (.68)	--	.353 (3.02)	--	.321 (3.03)	--	.221 (1.63)	--	.285 (4.78)	--	.270 (5.01)
SALES	--	.089 (2.01)	--	.116 (3.47)	--	.104 (3.90)	--	.139 (2.71)	--	.217 (8.18)	--	.195 (8.35)	--	.136 (4.28)	--	.197 (9.44)	--	.176 (10.17)
CRAFT	--	.066 (1.15)	--	.121 (3.22)	--	.104 (3.35)	--	.163 (.46)	--	.132 (.98)	--	.111 (.88)	--	.118 (2.09)	--	.192 (5.89)	--	.172 (6.17)
OPER	--	.086 (2.13)	--	.103 (3.12)	--	.093 (3.62)	--	.206 (2.66)	--	.248 (5.06)	--	.225 (5.55)	--	.133 (3.79)	--	.185 (7.14)	--	.165 (7.93)
LABOR	--	.021 (.51)	--	.115 (3.41)	--	.080 (3.05)	--	-.017 (.06)	--	.092 (.70)	--	.059 (.50)	--	.071 (1.84)	--	.176 (6.26)	--	.138 (6.11)
AGRI	--	-.184 (2.42)	--	-.302 (5.23)	--	-.258 (5.59)	--	-.356 (2.34)	--	-.253 (2.10)	--	-.273 (2.97)	--	-.230 (3.42)	--	-.313 (6.15)	--	-.280 (6.91)
CONSTR	--	.173 (2.63)	--	.140 (2.99)	--	.159 (4.19)	--	--	--	-.283 (1.21)	--	-.244 (1.04)	--	.137 (2.24)	--	.098 (2.36)	--	.119 (3.53)
MFG	--	.120 (3.49)	--	.151 (3.47)	--	.171 (5.02)	--	-.023 (.23)	--	-.053 (.80)	--	-.003 (.05)	--	.154 (3.36)	--	.092 (2.52)	--	.119 (4.20)
TRANS	--	.176 (2.52)	--	.159 (2.93)	--	.163 (3.80)	--	.119 (1.17)	--	.063 (.86)	--	.104 (1.82)	--	.162 (2.85)	--	.127 (2.89)	--	.137 (3.95)
TRADE	--	-.167 (3.10)	--	-.121 (2.96)	--	-.123 (3.77)	--	-.144 (1.99)	--	-.165 (2.88)	--	-.128 (3.00)	--	-.154 (3.58)	--	-.129 (3.87)	--	-.124 (4.76)
FIN	--	-.043 (.74)	--	-.127 (2.68)	--	-.092 (2.51)	--	.011 (.15)	--	.104 (1.78)	--	-.043 (1.00)	--	.012 (.28)	--	-.079 (2.19)	--	-.042 (1.53)
SERV	--	-.037 (.63)	--	-.055 (1.14)	--	-.041 (1.10)	--	-.368 (4.51)	--	-.392 (6.29)	--	-.359 (7.58)	--	-.165 (3.49)	--	-.231 (6.15)	--	-.206 (7.01)
CCITY	--	.124 (4.02)	--	.091 (3.92)	--	.103 (5.63)	--	.035 (.76)	--	.075 (2.81)	--	.066 (2.92)	--	.107 (4.19)	--	.091 (5.12)	--	.098 (6.82)
NCCITY	--	.128 (3.34)	--	.681 (3.87)	--	.093 (5.14)	--	.005 (.09)	--	.041 (1.66)	--	.037 (1.61)	--	.096 (2.98)	--	.068 (4.22)	--	.077 (5.35)
EAST	--	-.188 (4.30)	--	-.029 (1.25)	--	-.058 (2.86)	--	.074 (1.30)	--	.055 (1.98)	--	.064 (2.57)	--	-.080 (2.29)	--	0. (0.)	--	-.014 (.90)
WEST	--	-.020 (.37)	--	.045 (1.59)	--	.032 (1.28)	--	-.041 (.52)	--	.032 (.99)	--	.022 (.75)	--	-.016 (.36)	--	.023 (1.06)	--	.013 (.69)
SOUTH	--	-.304 (8.58)	--	-.167 (7.32)	--	-.178 (8.34)	--	-.105 (2.15)	--	-.073 (2.70)	--	-.064 (2.42)	--	-.225 (7.77)	--	-.135 (7.64)	--	-.138 (8.18)
MOUTH	--	--	--	--	--	-.081 (2.48)	--	--	--	--	--	-.039 (.93)	--	--	--	--	--	-.071 (2.72)
CONST	-.253	.235	-.156	-.120	-.148	-.042	-1.090	-.461	-.910	-.456	-.892	-.445	-.409	.018	-.297	-.225	-.288	-.152
R2	.168	.471	.100	.283	.118	.334	.172	.387	.097	.332	.100	.333	.199	.428	.166	.333	.168	.354
SSE	.373	.301	.381	.342	.379	.331	.388	.342	.367	.318	.375	.325	.378	.323	.378	.339	.379	.335
N	690		1593		2283		378		1014		1392		1068		2607		3675	

Table 4.3
Stage I and Stage II Wage Regressions: Age 20

Independent Variables	Males						Females						Full Sample					
	Black		White		Combined		Black		White		Combined		Black		White		Combined	
	I (1)	II (2)	I (3)	II (4)	I (5)	II (6)	I (7)	II (8)	I (9)	II (10)	I (11)	II (12)	I (13)	II (14)	I (15)	II (16)	I (17)	II (18)
RACE	--	--	--	--	-.163 (6.47)	-.022 (.67)	--	--	--	--	-.046 (1.96)	.016 (.58)	--	--	--	--	-.105 (6.09)	-.005 (.25)
SEX	--	--	--	--	--	--	--	--	--	--	--	--	-.315 (9.36)	-.240 (7.24)	-.328 (17.01)	-.237 (11.78)	-.315 (18.68)	-.231 (13.44)
IQ	.003 (1.66)	.001 (.69)	.001 (1.40)	.001 (.94)	0. (.40)	0. (.06)	.001 (.77)	-.001 (.34)	.001 (1.29)	.001 (1.01)	0. (.50)	0. (.19)	.003 (1.95)	.001 (.46)	.001 (1.89)	.001 (1.42)	0. (.56)	0. (.03)
FOC	-.048 (.95)	.031 (.69)	.047 (1.35)	.052 (1.72)	.021 (.75)	.044 (1.88)	-.027 (.53)	.032 (.70)	.057 (1.83)	.055 (1.94)	.024 (.96)	.037 (1.63)	-.056 (1.57)	.016 (.51)	.039 (1.63)	.043 (2.05)	.009 (.46)	.031 (1.86)
ATT	.002 (.71)	-.003 (.77)	0. (.16)	0. (.43)	0. (.03)	-.001 (.29)	-.005 (1.16)	-.007 (1.79)	-.003 (1.65)	-.003 (1.69)	-.004 (2.16)	-.004 (2.20)	-.002 (.55)	-.005 (1.87)	-.002 (1.35)	-.001 (.97)	-.003 (1.70)	-.002 (1.68)
ATTC	.072 (1.56)	.056 (1.40)	0 (0)	.020 (.82)	.025 (.99)	.026 (1.22)	-.013 (.21)	.054 (.99)	.020 (.58)	.025 (.80)	.011 (.35)	.031 (1.14)	.051 (1.36)	.054 (1.65)	.004 (.16)	.017 (.86)	.020 (1.02)	.028 (1.68)
EDUC	.083 (7.91)	.075 (7.87)	.028 (3.30)	.026 (3.49)	.051 (7.68)	.044 (7.59)	.091 (6.15)	.058 (4.26)	.050 (4.60)	.046 (4.46)	.070 (8.09)	.054 (6.75)	.082 (9.58)	.067 (8.64)	.028 (4.34)	.025 (4.31)	.052 (10.12)	.043 (9.29)
MOT	.116 (2.74)	.085 (2.32)	.137 (5.09)	.127 (5.43)	.138 (6.03)	.116 (5.88)	.003 (.06)	-.002 (.06)	-.056 (2.45)	-.026 (1.21)	-.030 (1.45)	-.010 (.56)	.050 (1.64)	.030 (1.14)	.029 (1.66)	.046 (2.90)	.043 (2.66)	.044 (3.21)
TRAIN	.109 (2.42)	.018 (.44)	.085 (2.85)	.058 (2.22)	.096 (3.82)	.045 (2.09)	.169 (3.74)	.089 (2.19)	.076 (3.20)	.062 (2.75)	.103 (4.85)	.078 (4.03)	.124 (3.87)	.069 (2.42)	.093 (4.31)	.067 (3.87)	.100 (6.05)	.069 (4.64)
VOC	.013 (.25)	-.036 (.80)	.054 (1.43)	-.002 (.07)	.047 (1.53)	.005 (.18)	.042 (.80)	-.040 (.86)	.071 (2.85)	.056 (2.41)	.067 (2.92)	.032 (1.51)	.032 (.83)	-.019 (.58)	.062 (2.83)	.030 (1.52)	.056 (2.95)	.021 (1.26
CUT	-.029 (1.92)	-.009 (.65)	.024 (2.43)	.033 (3.83)	.007 (.85)	.021 (2.97)	.109 (4.70)	.059 (2.86)	.054 (5.48)	.039 (4.30)	.067 (7.17)	.045 (5.36)	.014 (1.12)	.012 (1.11)	.040 (5.61)	.036 (5.70)	.032 (5.15)	.030 (5.49)
HFP	-.156 (2.69)	-.186 (3.72)	-.085 (2.78)	-.068 (2.57)	-.095 (3.49)	-.086 (3.60)	-.062 (.67)	-.076 (.94)	-.066 (1.50)	-.057 (1.42)	-.062 (1.52)	-.064 (1.77)	-.139 (2.79)	-.163 (3.75)	-.084 (3.43)	-.070 (3.21)	-.089 (3.98)	-.085 (4.30)
[illegible]	-.300 (5.23)	-.186 (3.55)	-.194 (5.59)	-.138 (4.55)	-.233 (7.85)	-.167 (6.48)	-.133 (2.30)	-.137 (2.65)	-.162 (4.77)	-.129 (4.15)	-.154 (5.26)	-.123 (4.70)	-.233 (5.43)	-.168 (4.57)	-.165 (6.73)	-.117 (5.31)	-.187 (8.88)	-.141 (7.52)
1966	-.222 (4.06)	-.223 (4.03)	-.124 (3.14)	-.146 (4.31)	-.155 (4.87)	-.161 (5.55)	--	--	--	--	--	--	-.245 (4.16)	-.194 (3.78)	-.054 (2.54)	-.101 (3.42)	-.130 (4.46)	-.126 (4.90)
1967	-.072 (1.12)	-.008 (.15)	-.064 (1.75)	-.070 (2.20)	-.069 (2.14)	-.051 (1.84)	--	--	--	--	--	--	-.056 (.94)	.001 (0)	-.018 (.57)	-.026 (.94)	-.026 (.94)	-.015 (.63)
1969	-.034 (.56)	-.032 (.62)	-.023 (.63)	-.026 (.83)	-.026 (.82)	-.024 (.89)	.038 (.62)	-.029 (.54)	.064 (2.24)	.059 (2.23)	.056 (2.13)	.039 (1.66)	-.016 (.38)	-.030 (.80)	.024 (1.02)	.022 (1.07)	.017 (.82)	.013 (.71)
1970	-.082 (1.49)	-.054 (1.15)	-.056 (1.57)	-.057 (1.84)	-.062 (2.04)	-.052 (2.03)	.021 (.35)	-.015 (.21)	.082 (2.30)	.073 (2.78)	.066 (2.51)	.052 (2.91)	-.038 (.93)	-.029 (.84)	.020 (.87)	.018 (.87)	.005 (.24)	.006 (.33)
1971	--	--	--	--	--	--	.115 (2.00)	.032 (.62)	.067 (2.30)	.072 (2.72)	.085 (3.21)	.069 (2.91)	.072 (1.42)	.025 (.57)	.032 (1.08)	.048 (1.81)	.055 (2.13)	.049 (2.15)

PROF	--	.082 (.97)	--	.237 (5.09)	--	.180 (4.50)	--	.144 (1.48)	--	.177 (3.74)	--	.175 (4.05)	--	.156 (2.43)	--	.202 (6.19)	--	.190 (6.58)
MGRS	--	.015 (.09)	--	.261 (4.20)	--	.190 (3.38)	--	.368 (1.46)	--	.281 (2.94)	--	.320 (3.51)	--	.205 (1.51)	--	.262 (5.33)	--	.258 (5.59)
SALES	--	-.085 (1.35)	--	.172 (4.07)	--	.093 (2.67)	--	.241 (4.99)	--	.105 (3.91)	--	.148 (6.36)	--	.167 (4.52)	--	.153 (6.63)	--	.159 (8.18)
CRAFT	--	.007 (.09)	--	.198 (4.33)	--	.131 (3.42)	--	.264 (1.29)	--	.084 (.91)	--	.144 (1.51)	--	.168 (2.62)	--	.207 (6.10)	--	.202 (6.79)
OPER	--	-.031 (.51)	--	.159 (3.71)	--	.102 (2.91)	--	.243 (3.44)	--	.122 (2.81)	--	.171 (4.71)	--	.163 (3.73)	--	.155 (5.38)	--	.162 (6.77)
LABOR	--	-.039 (.60)	--	.196 (4.26)	--	.112 (3.01)	--	.227 (.90)	--	-.042 (.31)	--	.049 (.41)	--	.149 (2.87)	--	.177 (5.10)	--	.162 (5.65)
PORT	--	-.437 (3.99)	--	-.392 (4.66)	--	-.401 (6.22)	--	-.360 (2.07)	--	-.032 (.26)	--	-.226 (2.27)	--	-.435 (5.01)	--	-.328 (4.79)	--	-.401 (7.67)
CONSTR	--	-.008 (.08)	--	.211 (4.05)	--	.198 (4.29)	--	--	--	-.089 (.72)	--	-.108 (.83)	--	.045 (.58)	--	.162 (3.99)	--	.144 (3.97)
MFG	--	-.057 (.65)	--	.145 (3.09)	--	.125 (3.01)	--	-.075 (.86)	--	-.010 (.21)	--	-.040 (.99)	--	-.048 (.83)	--	.081 (2.43)	--	.049 (1.71)
TRANS	--	-.101 (.96)	--	.148 (2.46)	--	.098 (1.88)	--	.008 (.08)	--	.101 (1.86)	--	.067 (1.40)	--	-.043 (.61)	--	.124 (3.00)	--	.074 (2.06)
TRADE	--	-.261 (2.90)	--	-.120 (2.51)	--	-.123 (2.92)	--	-.220 (2.88)	--	-.205 (4.83)	--	-.218 (5.88)	--	-.244 (4.24)	--	-.161 (4.97)	--	-.182 (6.40)
FIN	--	-.462 (4.69)	--	-.188 (3.71)	--	-.218 (4.83)	--	-.073 (1.04)	--	-.095 (2.31)	--	-.098 (2.78)	--	-.189 (3.32)	--	-.100 (3.08)	--	-.118 (4.16)
SERV	--	-.271 (2.74	--	-.095 (1.71)	--	-.081 (1.68)	--	-.331 (4.13)	--	-.285 (5.83)	--	-.311 (7.49)	--	-.312 (5.02)	--	-.203 (5.42)	--	-.227 (7.08)
CCITY	--	.137 (3.46)	--	.080 (3.10)	--	.102 (4.72)	--	.147 (3.32)	--	.088 (3.70)	--	.107 (5.16)	--	.157 (5.30)	--	.094 (5.23)	--	.116 (7.63)
NCCITY	--	.087 (1.58)	--	.106 (4.44)	--	.110 (5.04)	--	.146 (2.60)	--	.076 (3.38)	--	.091 (4.31)	--	.123 (3.09)	--	.097 (5.79)	--	.107 (6.89)
EAST	--	-.118 (1.88)	--	-.032 (.120)	--	-.042 (1.70)	--	.069 (1.16)	--	.057 (2.19)	--	.064 (2.66)	--	-.005 (.12)	--	.009 (.45)	--	.006 (.36)
WEST	--	-.096 (1.17)	--	.040 (1.26)	--	.024 (.82)	--	-.044 (.59)	--	.073 (2.53)	--	.045 (1.68)	--	-.065 (1.18)	--	.047 (2.17)	--	.028 (1.39)
SOUTH	--	-.292 (5.89)	--	-.188 (7.20)	--	-.182 (7.09)	--	-.136 (2.88)	--	-.050 (2.07)	--	-.053 (2.16)	--	-.201 (5.85)	--	-.124 (6.88)	--	-.119 (6.60)
NORTH	--	--	--	--	--	-.077 (1.90)	--	--	--	--	--	-.100 (2.65)	--	--	--	--	--	-.086 (.06)
CONST	-.599	.109	.304	.149	.147	.137	-.829	-.184	-.268	-.237	-.432	-.262	-.469	-.030	.314	.176	.133	.103
R^2	.256	.493	.117	.371	.165	.404	.206	.441	.116	.289	.145	.341	.219	.435	.182	.365	.192	.388
SSE	.383	.323	.381	.324	.386	.328	.397	.340	.319	.289	.345	.305	.396	.341	.357	.316	.373	.325
N	444		1112		1556		406		1006		1412		850		2118		2968	

Table 4.4
Stage I and Stage II Wage Regressions: Age 24

Independent Variables	Males						Females						Full Sample					
	Black		White		Combined		Black		White		Combined		Black		White		Combined	
	I	II	I	II	I	II	I	II	I	II	I	II	I	II	I	II	I	II
	(1)	(2)	(3)	(4)	(5)	(6)	(7)	(8)	(9)	(10)	(11)	(12)	(13)	(14)	(15)	(16)	(17)	(18)
RACE	--	--	--	--	-.199 (7.16)	.013 (.34)	--	--	--	--	-.039 (1.26)	.068 (1.81)	--	--	--	--	-.129 (6.20)	.042 (1.59)
SEX	--	--	--	--	--	--	--	--	--	--	--	--	-.347 (7.80)	-.276 (7.46)	-.391 (16.16)	-.312 (12.85)	-.376 (17.65)	-.304 (14.89)
IQ	.007 (2.70)	.001 (.78)	.002 (1.50)	.001 (1.45)	.002 (2.19)	.002 (2.20)	.007 (3.09)	.003 (1.61)	.003 (2.30)	0. (.13)	.003 (3.34)	.001 (1.09)	.007 (4.24)	.002 (1.84)	.002 (2.67)	.001 (1.00)	.003 (3.54)	.001 (1.74)
IQC	-.139 (2.06)	.069 (1.35)	-.071 (2.36)	-.043 (1.57)	-.077 (2.87)	-.032 (1.38)	-.105 (1.68)	.046 (.87)	.015 (.37)	-.003 (.07)	-.028 (.85)	.025 (.84)	-.149 (3.27)	.030 (.83)	-.039 (1.62)	-.031 (1.39)	-.059 (2.78)	-.013 (.71)
ATT	.003 (.61)	.002 (.51)	-.006 (2.33)	-.006 (2.52)	-.005 (1.98)	-.005 (2.42)	.001 (.14)	0. (.07)	-.001 (.27)	-.001 (.36)	0. (.16)	0. (.06)	.002 (.53)	.001 (.42)	-.003 (1.49)	-.004 (2.18)	-.003 (1.55)	-.003 (2.17)
ATTC	.050 (.87)	.013 (.29)	-.028 (.96)	-.035 (1.34)	-.013 (.52)	-.026 (1.17)	.190 (2.71)	.089 (1.50)	.012 (.28)	.013 (.34)	.070 (1.90)	.036 (1.11)	.087 (1.97)	.046 (1.37)	-.014 (.58)	-.014 (.63)	.012 (.58)	-.002 (.11)
EDUC	.063 (5.99)	.037 (4.16)	.039 (7.58)	.039 (6.74)	.044 (9.58)	.039 (8.05)	.065 (5.61)	.027 (2.51)	.080 (10.70)	.041 (4.65)	.075 (12.00)	.034 (5.17)	.060 (7.04)	.033 (5.00)	.053 (12.25)	.039 (8.21)	.055 (14.95)	.038 (9.71)
MST	.014 (.27)	-.007 (.19)	.111 (4.20)	.089 (3.71)	.088 (3.76)	.071 (3.49)	.014 (.28)	.023 (.56)	-.040 (1.30)	-.028 (1.00)	-.024 (.91)	-.010 (.43)	-.002 (.05)	.004 (.16)	.036 (1.81)	.033 (1.78)	.028 (1.58)	.028 (1.86)
TRAIN	.025 (1.67)	-.079 (1.85)	.047 (1.89)	.010 (.45)	.051 (2.20)	.004 (.20)	.179 (3.59)	.091 (2.02)	.097 (3.44)	.083 (3.15)	.122 (4.92)	.087 (3.92)	.114 (2.99)	.008 (.25)	.083 (4.40)	.054 (3.12)	.098 (5.75)	.052 (3.46)
VOC	.049 (.63)	.022 (.38)	.094 (2.51)	.055 (1.61)	.091 (2.71)	.050 (1.69)	.083 (1.20)	-.044 (.75)	.022 (.64)	-.013 (.40)	.040 (1.30)	.005 (.18)	.085 (1.66)	-.001 (.03)	.039 (1.55)	.010 (.45)	.053 (2.33)	.014 (.68)
CJT	-.007 (.56)	-.001 (.09)	.008 (1.[illegible])	.010 (1.79)	.004 (.80)	.007 (1.50)	.038 (2.48)	.026 (1.99)	.048 (6.79)	.034 (5.09)	.048 (7.42)	.033 (5.72)	.012 (1.22)	.011 (1.52)	.027 (5.86)	.024 (5.68)	.024 (5.67)	.021 (5.69)
HFP	-.167 (1.98)	-.168 (2.65)	-.019 (.56)	-.016 (.52)	-.043 (1.36)	-.030 (1.10)	-.064 (.64)	-.096 (1.20)	.032 (.55)	.025 (.46)	.001 (0.)	-.014 (.33)	-.126 (1.95)	-.137 (2.77)	-.015 (.50)	-.001 (.03)	-.032 (1.19)	-.022 (.92)
ENROLL	-.205 (1.[illegible])	-.130 (1.45)	-.113 (3.09)	-.147 (4.40)	-.121 (3.38)	-.152 (4.86)	-.186 (1.70)	-.049 (.54)	-.087 (1.60)	-.097 (1.98)	-.081 (1.66)	-.080 (1.90)	-.158 (1.93)	-.108 (1.74)	-.102 (3.33)	-.125 (4.48)	-.100 (3.44)	-.124 (4.89)
1966	-.114 (1.52)	-.174 (3.20)	-.075 (2.21)	-.091 (2.97)	-.079 (2.53)	-.102 (3.80)	--	--	--	--	--	--	-.018 (.27)	-.112 (2.27)	-.071 (2.23)	-.077 (2.68)	-.058 (2.02)	-.083 (3.32)
1967	-.037 (.47)	-.076 (1.32)	-.036 (1.04)	-.039 (1.25)	-.027 (.83)	-.04[illegible] (1.55)	--	--	--	--	--	--	.060 (.86)	-.016 (.31)	-.035 (1.06)	-.031 (1.03)	-.008 (.26)	-.027 (1.04)
1969	.032 (-.41)	-.029 (.50)	.032 (.83)	.015 (.43)	.038 (1.10)	.015 (.49)	.251 (3.25)	.121 (1.78)	.009 (.21)	.033 (.87)	.071 (1.94)	.054 (1.69)	.133 (2.40)	.051 (1.21)	.015 (.51)	.012 (.48)	.041 (1.62)	.024 (1.09)
1970	-.025 (.32)	.010 (.16)	-.003 (.09)	-.002 (.05)	-.003 (.08)	.010 (.32)	.277 (3.86)	.150 (2.30)	-.021 (.51)	.013 (.34)	.060 (1.69)	.053 (1.71)	.124 (2.33)	.092 (2.24)	-.014 (.48)	-.006 (.23)	.019 (.77)	.020 (.91)
1971	--	--	--	--	--	--	.290 (4.12)	.192 (3.28)	-.009 (.14)	.039 (1.10)	.067 (1.96)	.078 (2.62)	.184 (2.86)	.154 (3.19)	.004 (.11)	.023 (.71)	.045 (1.45)	.051 (1.91)

FPOF	--	.434 (4.75)	--	.132 (2.24)	--	.185 (3.95)	--	.402 (4.67)	--	.397 (6.61)	--	.405 (8.59)	--	.409 (6.86)	--	.304 (7.54)	--	.313 (9.72)
MPOS	--	.426 (2.88)	--	.060 (.95)	--	.125 (2.39)	--	.162 (.51)	--	.285 (2.92)	--	.295 (3.32)	--	.355 (2.72)	--	.220 (4.67)	--	.246 (6.03)
SALES	--	-.034 (.44)	--	.050 (.86)	--	.070 (1.53)	--	.183 (2.93)	--	.166 (3.62)	--	.182 (5.10)	--	.123 (2.74)	--	.148 (4.21)	--	.150 (5.48)
CRAFT	--	.146 (1.96)	--	.047 (.80)	--	.094 (2.08)	--	.257 (1.51)	--	.315 (2.31)	--	.307 (2.92)	--	.193 (3.16)	--	.217 (5.11)	--	.219 (6.21)
OPER	--	.116 (1.75)	--	-.024 (.42)	--	.033 (.74)	--	.244 (3.02)	--	.174 (2.70)	--	.209 (4.40)	--	.170 (3.60)	--	.135 (3.42)	--	.146 (4.86)
LABOR	--	.046 (.62)	--	-.163 (2.35)	--	-.075 (1.46)	--	.365 (1.19)	--	.088 (.46)	--	.144 (.89)	--	.119 (1.99)	--	.005 (.09)	--	.040 (.99)
AGRI	--	-.876 (7.43)	--	-.400 (4.31)	--	-.510 (7.10)	--	-.783 (3.18)	--	-.139 (.42)	--	-.517 (2.72)	--	-.856 (8.49)	--	-.474 (5.40)	--	-.586 (8.99)
COMSTR	--	-.108 (1.12)	--	-.259 (4.88)	--	.197 (4.23)	--	--	--	-.122 (.79)	--	-.130 (.87)	--	-.073 (.88)	--	.169 (3.65)	--	.126 (3.10)
MFG	--	-.203 (2.43)	--	.106 (2.33)	--	.060 (1.51)	--	-.272 (2.36)	--	-.123 (2.03)	--	-.145 (2.76)	--	-.190 (2.89)	--	-.001 (.03)	--	-.026 (.84)
TRANS	--	-.240 (2.34)	--	.106 (1.92)	--	.057 (1.17)	--	-.155 (1.09)	--	-.014 (.18)	--	-.034 (.52)	--	-.198 (2.46)	--	.028 (.64)	--	-.003 (.07)
TRADE	--	-.439 (4.98)	--	-.074 (1.58)	--	-.127 (3.08)	--	-.396 (3.48)	--	-.297 (4.89)	--	-.309 (5.91)	--	-.406 (5.97)	--	-.181 (4.96)	--	-.217 (6.72)
FIN.	--	-.350 (4.01)	--	-.184 (3.71)	--	-.213 (4.93)	--	-.236 (2.40)	--	-.196 (3.79)	--	-.190 (4.23)	--	-.242 (3.91)	--	-.162 (4.57)	--	-.166 (5.41)
SERV	--	-.497 (5.27)	--	-.010 (.16)	--	-.101 (1.99)	--	-.600 (5.43)	--	-.359 (5.41)	--	-.419 (7.60)	--	-.553 (8.02)	--	-.218 (5.02)	--	-.290 (7.97)
CCITY	--	.175 (3.82)	--	.108 (3.96)	--	.110 (4.76)	--	.132 (2.72)	--	.158 (4.84)	--	.146 (5.50)	--	.166 (5.09)	--	.135 (6.34)	--	.131 (7.43)
NCCITY	--	.152 (2.40)	--	.147 (5.70)	--	.147 (6.23)	--	.110 (1.71)	--	.134 (4.09)	--	.125 (4.37)	--	.145 (3.28)	--	.144 (6.99)	--	.140 (7.61)
EAST	--	-.187 (2.88)	--	.052 (1.75)	--	.022 (.82)	--	-.039 (.55)	--	.027 (.71)	--	.018 (.55)	--	-.111 (2.36)	--	.054 (2.28)	--	.024 (1.14)
WEST	--	.147 (1.73)	--	.037 (1.16)	--	.040 (1.33)	--	-.097 (1.26)	--	-.033 (1.84)	--	-.034 (.99)	--	.017 (.29)	--	.015 (.58)	--	.011 (.47)
SOUTH	--	-.358 (6.54)	--	-.089 (3.17)	--	-.095 (3.48)	--	-.291 (5.28)	--	-.069 (2.09)	--	-.077 (2.49)	--	-.322 (8.49)	--	-.081 (3.73)	--	-.091 (4.42)
MOUTH	--	--	--	--	--	-.220 (4.81)	--	--	--	--	--	-.185 (3.75)	--	--	--	--	--	-.206 (6.06)
CONST	-.586	.483	.413	.346	.301	.308	-1.279	-.108	-.734	-.033	-.818	-.095	-.712	.262	.126	.273	.031	.268
R^2	.235	.643	.146	.332	.249	.457	.365	.637	.379	.437	.307	.504	.287	.622	.272	.417	.316	.496
SSE	.407	.287	.364	.325	.376	.322	.377	.296	.358	.321	.367	.314	.398	.295	.368	.332	.378	.326
N	307		993		1300		250		673		923		557		1666		2223	

Table 4.5

Stage I and Stage II Wage Regressions:
All Ages (1970)[a]

Independent Variables	Males I	Males II	Females I	Females II
RACE	-.095 (5.82)	.013 (.58)	-.041 (.45)	.006 (.07)
AGE	.035 (13.52)	.030 (13.07)	.021 (6.24)	.017 (5.99)
IQ	.001 (2.43)	0.0 (.73)	.003 (4.50)	.001 (2.62)
IQC	-.043 (2.73)	-.001 (.06)	-.028 (1.63)	-.003 (.18)
ATT	-.003 (1.72)	-.002 (1.84)	-.002 (1.18)	-.001 (1.12)
ATTC	.008 (.52)	-.003 (.24)	.006 (.24)	-.011 (.49)
EDUC	.047 (14.50)	.037 (11.64)	.073 (14.74)	.031 (6.45)
MST	.118 (7.65)	.105 (7.74)	-.006 (.36)	.010 (.72)
TRAIN	.069 (4.72)	.035 (2.69)	.102 (6.37)	.075 (5.42)
VOC	.060 (2.99)	.012 (.71)	.061 (3.61)	.026 (1.81)
CJT	.016 (4.29)	.013 (3.82)	.040 (8.05)	.027 (6.36)
HFP	-.086 (3.76)	-.069 (3.47)	-.056 (2.06)	-.051 (2.22)
ENROLL	-.172 (9.34)	-.118 (7.32)	-.161 (8.44)	-.093 (5.71)
PROF	-	.268 (9.86)	-	.390 (14.91)
MANG	-	.262 (8.38)	-	.260 (4.37)
SALES	-	.153 (6.05)	-	.194 (11.94)

Table 4.5 (cont'd)

Independent Variables	Males I	Males II	Females I	Females II
CRAFT	-	.154 (4.99)	-	.254 (3.45)
OPER	-	.097 (3.96)	-	.182 (6.89)
LABOR	-	.087 (3.29)	-	.170 (2.57)
AGRI	-	-.304 (7.07)	-	-.298 (3.88)
CONSTR	-	.122 (3.69)	-	-.019 (.23)
MFG	-	-.016 (.52)	-	-.015 (.49)
TRANS	-	-.010 (.29)	-	.032 (.86)
TRADE	-	-.170 (5.65)	-	-.157 (5.74)
FIN	-	-.195 (6.50)	-	-.042 (1.60)
SERV	-	-.172 (4.91)	-	-.378 (12.60)
CCITY	-	.116 (8.08)	-	.118 (8.14)
NCCITY	-	.101 (6.95)	-	.099 (6.65)
EAST	-	.014 (.87)	-	.058 (3.45)
SOUTH	-	-.107 (6.28)	-	-.047 (2.72)
RSOUTH	-	-.120 (4.37)	-	-.098 (3.63)
INDUN	-	.148 (7.04)	-	.075 (2.25)
CRFUN	-	.262 (9.90)	-	.364 (5.55)
GVTUN	-	.106 (5.00)	-	.133 (5.10)
CONST	-.625	-.431	-1.134	-.563
R^2	.340	.510	.322	.521
SSE	.377	.325	.378	.319
N	3398	3398	3177	3177

a. The dependent variable is the natural logarithm of deflated wage in 1970. The absolute value of asymptotic t-statistics appear in parentheses.

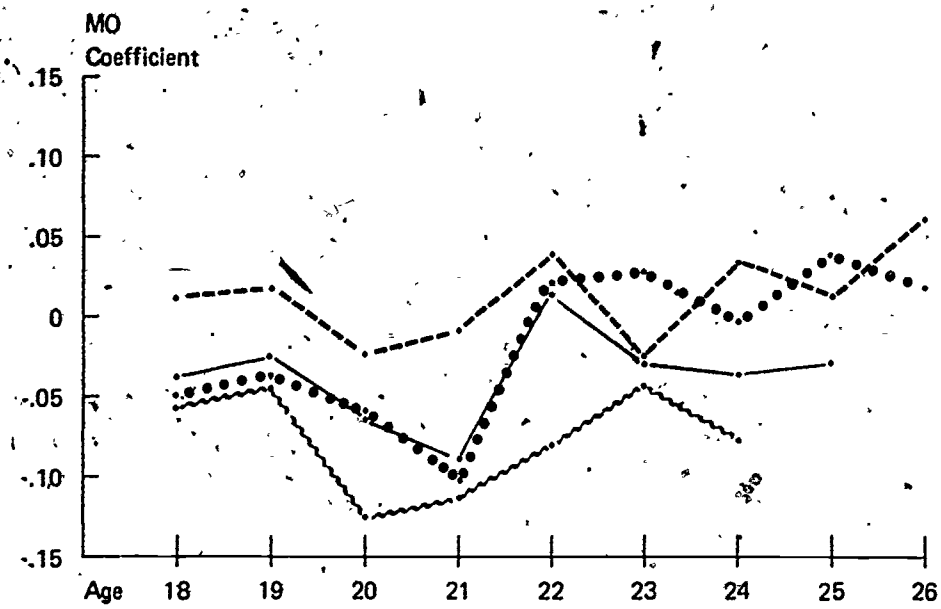

4.1a
White Males

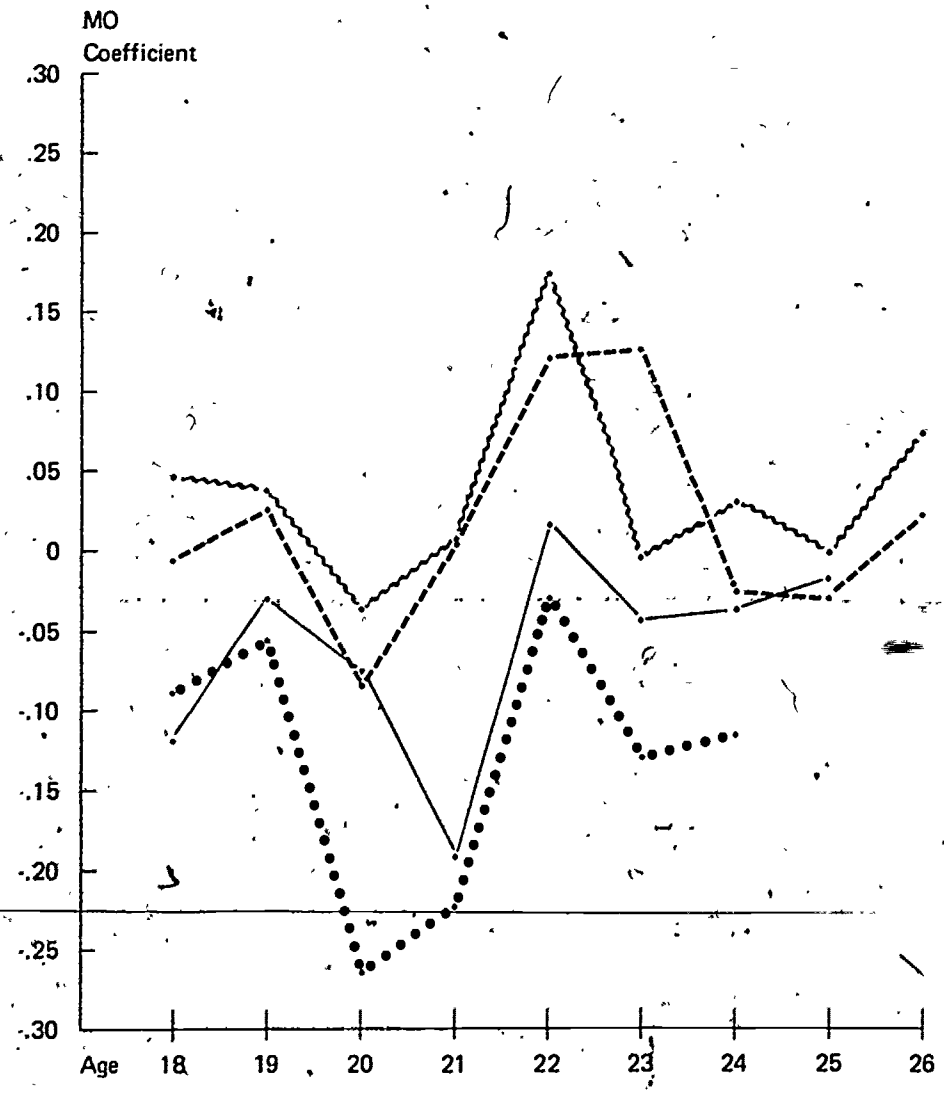

4.1b
Black and
Other Males

Figures 4.1a and 4.1b
Market Opportunity Coefficients by Age: Males

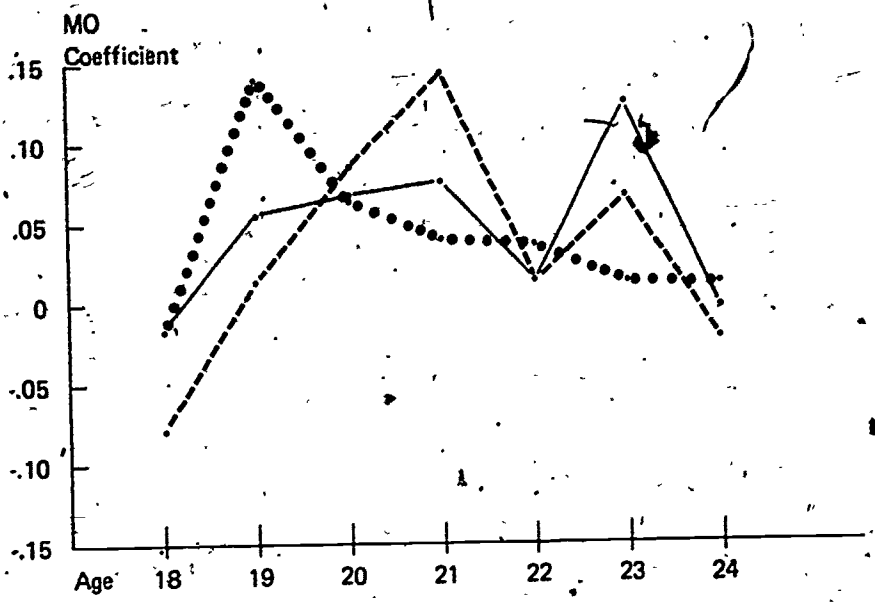

1969
1970
1971

4.1c
White Females

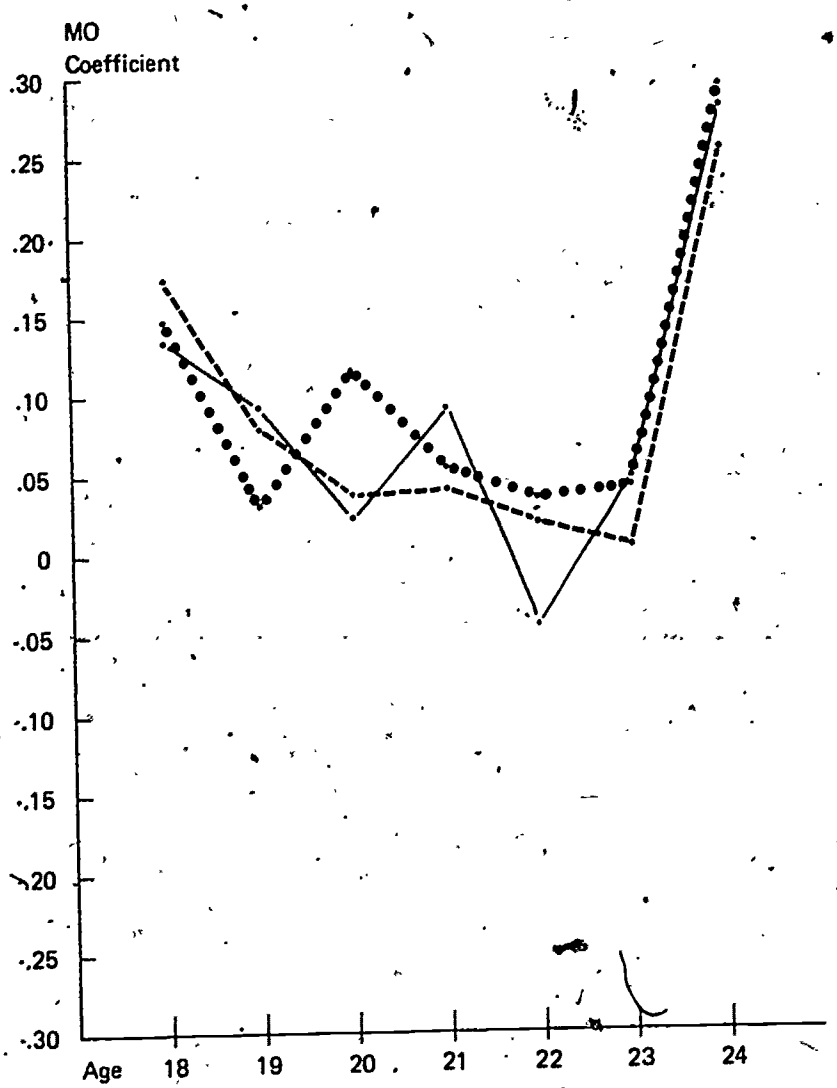

1969
1970
1971

4.1d
Black and
Other Females

Figures 4.1c and 4.1d
Market Opportunity Coefficients by Age: Females

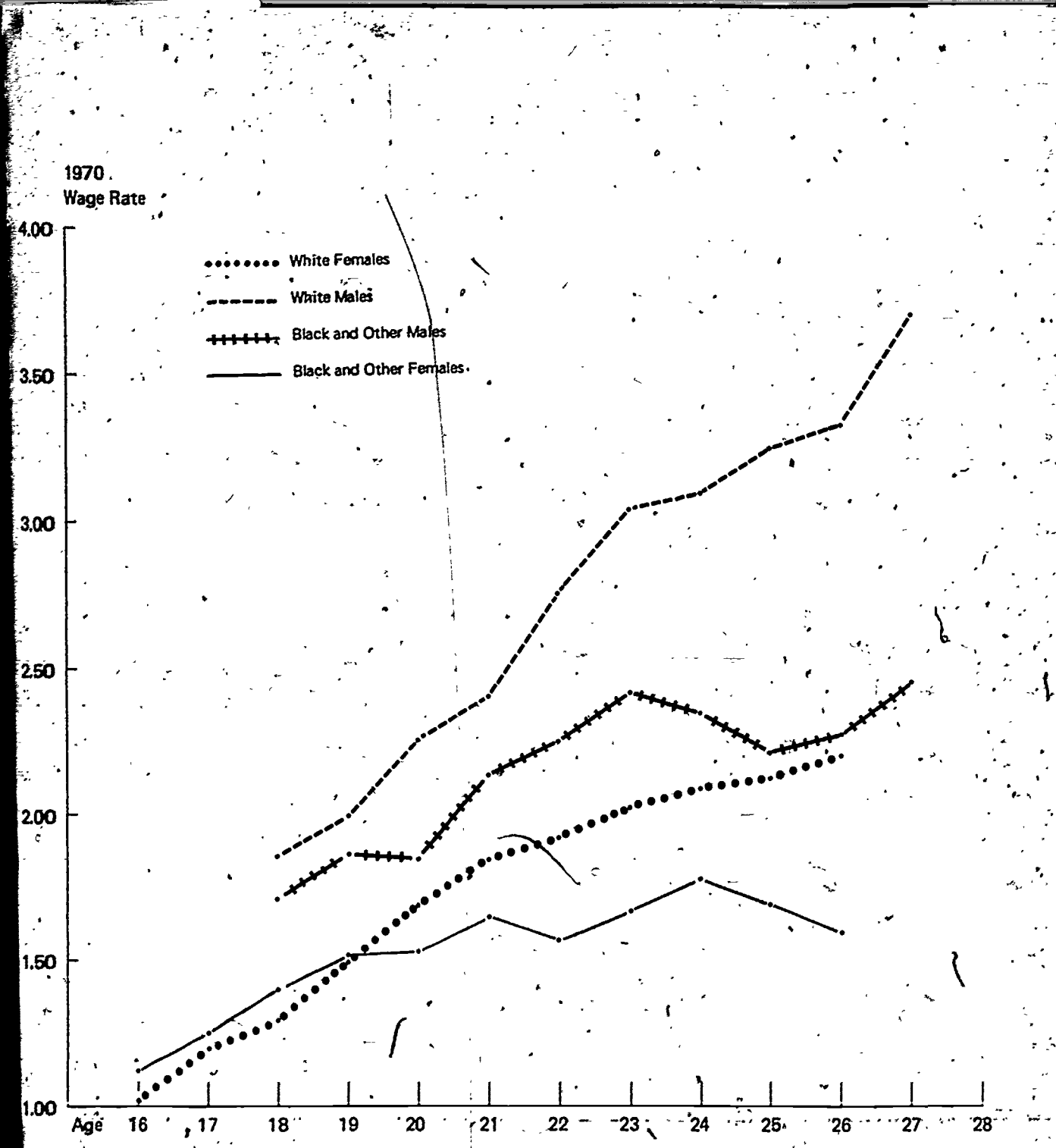

Figure 4.2
1970 Wage Rate by Age

Appendix IV.1

An Investigation of the Determinants of Sex Differences in Union Membership

It is well known that men are more likely to be union members than women. In 1970, for example, 31 percent of men and 16 percent of women in the American labor force were union members (Bergquist, 1974, Table 1). The most commonly offered explanation for this is a systematic difference by sex in the occupational and industrial distribution of the labor force, with women more often employed in less organized occupations and industries. Alternative explanations include variations in regional work patterns and the greater tendency of women to work in parttime jobs that are less likely to be unionized. Thus far none of these hypotheses has been empirically tested.

In this appendix, we briefly examine the extent to which the male-female unionization gap is explained by differences in the occupational and industrial distribution and other factors by estimating a logit model of union membership. (A detailed discussion of the logit framework is presented in the Appendix to Chapter III.)

The model is estimated in stepwise fashion. We first examine the impact of traditional human capital variables on the probability of union membership. (See Duncan and Stafford (1977) and Schmidt and Strauss (1976) for similar formulations.) Occupational and industrial variables are then added sequentially. To test for systematic structural differences the model is reestimated using data disaggregated by parttime employment, race, and region.

The sample analyzed is the 2066 men and 1603 women aged 21 or over who were employed as nonagricultural wage and salary workers in 1970. Respondents not reporting union status, occupation, and industry were excluded. Means and standard deviations for all variables appear in Table A4.1. Probably because of the youth of our sample, a smaller proportion are unionized than in the general population--27 percent of the sampled males (versus 31 percent) and 12 percent of the sampled females (versus 16 percent). In each case, men are 15 percent more likely to be union members than are women. Union members are less educated, much less likely to be parttime workers, older, live in nonsouthern and urban areas than the sample as a whole. Proportionally, more blacks are union members. The expected occupational and industrial pattern of union membership is also noted.

In reviewing these results, we must acknowledge a potentially serious limitation of the data which affects the classification of workers into union members and nonmembers. In the 1970 surveys workers were first asked, "Are your wages (salary) on this [survey week] job set by collective bargaining agreement between your employer and a union or employee association?" Those who responded affirmatively were then asked, "Are you a member of that union or employee association?" Restricting the analysis to workers covered by collective bargaining would introduce a selection bias, since those who are not covered by such agreements are frequently not union members. Moreover, unions which do not negotiate wages are undoubtedly in the minority, and the limited scope of their labor market activities indicates the need to distinguish between these employee organizations and traditional unions. For these reasons, respondents were classified as union members if they respondend affirmitavely to the union

question; nonmembers, if they respondend negatively to either the collective bargaining or union questions.

Maximum likelihood estimates of the logit model, utilizing the full sample, are reported in Table A 4.2. The derivatives evaluated at the means are reported in Table A 4.3. Equation 1 shows the impact of human capital variables alone on unionization. The results confirm the observations made above on the basis of the means, as well as most of the results reported by Schmidt and Strauss (1976). Education has a small but significant negative impact on the probability of union membership. Being black or from an urbanized area has a small positive effect. Nonsoutherners are more likely to be union members. Perhaps the most important result is that differences in human capital explain virtually none of the male-female unionization gap. Our estimates indicate that even when human capital is controlled, women are 15 percent less likely to be union members--which is identical to the differential calculated using the sample means and national estimates (from Bergguist) cited earlier.

When occupational dummies are included in the model (Equation 2) the effect of the sex variable declines to 9 percent. The parttime and southern residence derivatives decline slightly. When industry variables are also added (Equation 3) the effect of the sex variable declines further, to 7 percent. The derivative of the parttime variable declines somewhat further, with little change in the other human capital variables. As expected, inclusion of industry variables reduces the impact of the occupational variables.

Disaggregation by parttime work suggests that while women's greater tendency to engage in parttime employment explains a portion of the male-female unionization differential, the lion's share of that gap is caused by the occupation and industrial distribution independent of parttime

work patterns. Among fulltime workers, women are 18 percent less likely to be union members before controlling for occupation and industry. After occupational variables added, female fulltime workers are still 11 percent less likely to be union members than male fulltime workers. In contrast, parttime working women are slightly more likely to be union members than are parttime working men; the magnitude of the difference is small (2 percent), however, and it must be remembered that parttime workers in general are 22 percent less likely to be union members than fulltime workers (Equation 1).

Estimates based on disaggregation by region and race were obtained and can be briefly summarized. The male-female unionization gap is somewhat smaller in the south, with southern women 9 percent less likely than southern men to be union members when human capital variables are controlled, and 4 percent less likely when industry and occupation variables are added. The negative impact of parttime work is smaller in the south than in the nation as a whole, causing a reduction in the probability of union membership to about 15 percent. The effect of race on unionization in the south is negligible. When the data are disaggregated by race we find that black women are 11 percent to 17 percent less likely than black men to be union members, depending on the specification of the estimating equation. This compares with a negative sex effect of 5 to 13 percent for whites. Parttime work is associated with a 30 to 34 percent decline in union membership among nonwhites, compared to a 16 to 19 percent decline among whites.

To test the robustness of our results, we estimated linear probability models for three alternative specifications of the dependent variable. Table A 4.4 reports regression coefficients and t values estimated for the female variable, for each of two formulations of the estimating equation--the first includes sex, race, region, parttime status, age, education, SMSA; the

second adds occupation and industry. The first set of results (union/nonunion for the complete sample) uses a dummy variable which is one if the individual is a union member, zero otherwise. The definition of union member here is identical to the one used in Tables A 4.1 to A 4.3, so these estimates correspond exactly to the logit results discussed in this section. The coefficients are highly significant and somewhat larger in absolute value than derivatives of the sex variable reported in Table A 4.3, columns (1) and (3). The second set of results (collective bargaining / not collective bargaining for the complete sample) uses a dummy variable set equal to one if the respondent says his wages are set by collective bargaining. This variant is included because all respondents were asked this question. The sex coefficients for this second set of estimates are even larger in absolute value than the first set of results, although the impact of occupation and industry on the estimated sex effect is nearly identical for these two sets of estimates. The third set (union/nonunion for the sample restricted to persons covered by collective bargaining) yields estimates very different from the first two sets, indicating a much smaller male-female unionization gap. The roughly 7 percent gap implied by the limited specification is inconsistent with the independent estimate of 15 percent from Bergguist, and is evidently due to sample selection bias when the observations are limited to those who responded in a particular way to the initial collective bargaining question.

These results confirm the hypothesis that the occupational and industrial distribution explains a significant portion of the male-female unionization gap. The role of the occupational distribution is largely independent of any variation in either human capital or the incidence of parttime work. A substantial part of the male-female unionization gap remains unexplained.

Omitted variables undoubtedly account for a portion of the remaining differential. No measures of sex discrimination by unions or systematic male-female differences in tastes for unionization are available. An additional difficulty may be inadequate control for sex differences in the occupational distribution, due to the highly aggregated nature of our variables. In spite of these deficiencies, the explanatory power of occupation and industry is impressive. This suggests an important avenue for future research: investigation of the career decisions that result in the observed occupational and industrial distribution. Until more is known about the dynamics of occupational choice and its interrelationship with the union membership decision, we will not truly have a behavioral explanation for sex differences in union membership.

TABLE A4.1

MEAN VALUES OF INDEPENDENT VARIABLES BY UNION MEMBERSHIP STATUS[a]

VARIABLE	DESCRIPTION[b]	MEAN	
Union Membership Status		Member	Nonmember
Number of Respondents		754	2915
Personal Characteristics			
RACE	Respondent is nonwhite	.28	.25
SEX	Respondent is female	.26	.48
EDUC	Years of formal education completed	12.29	12.64
AGE	Age in years	24.19	22.73[c]
PT	Works < 35 hrs/week	.05	.20
Location			
SOUTH	Respondent lives in southern region	.22	.42
SMSA	Respondent lives in SMSA	.71	.64
Occupation			
PROF	Professional and Technical Workers	.16	.19
MANG	Managers and Officials	.02	.06
SALES	Clerical and Sales Workers	.15	.31
CRAFT	Craftsmen and Foremen	.17	.09
OPER	Operatives	.36	.18
LABOR	Laborers	.09	.04
PHSU[d]	Private household workers and occupations not reported	.06	.12
Industry			
CONSTR	Mining and Construction	.09	.06
MFG	Manufacturing	.45	.25
TRANS	Transportation and Communication	.14	.05
TRADE	Wholesale and Retail Trade	.08	.19
FIN	Finance, Insurance and Real Estate	.18	.30
SERV	Services	.01	.09
PAD	Public Administration and industry not reported	.06	.06

a. The sample is the 3669 respondents who were employed as nonagricultural wage and salary workers in 1970 and reported occupational, industrial and union membership status.

b. With the exception of EDUC and AGE all variables are dichotomous assuming the value 1 if the indicated requirement is met, 0 otherwise.

c. The lower mean age for females is due to the timing of the surveys. The male's survey was initiated in 1966 while the female's was initiated in 1968, thereby restricting the sample to men age 21 to 28 and women aged 21 to 26 in 1970.

d. Omitted in estimation.

TABLE A4.2

Determinants of Union Membership: Stratified By Fulltime and Parttime Workers

Variable	Equation (1) ln Prob (un)/Prob (non)	(2) ln Prob (un)/Prob (non)	(3) ln Prob (un)/Prob (non)	(4) ln Prob (un)/Prob (non)	(5) ln Prob (un)/Prob (non)	(6) ln Prob (un)/Prob (non)	(7) ln Prob (un)/Prob (non)	(8) ln Prob (un)/Prob (non)
RACE	.479 (4.52)	.395 (3.56)	.401 (3.53)	.546 (4.96)	.497 (4.29)	.499 (4.21)	-.285 (.59)	-.321 (1.66)
SEX	-.999 (10.53)	-.669 (6.17)	-.601 (5.32)	-1.102 (11.08)	-.718 (6.39)	-.730 (6.23)	.515 (1.26)	.846 (1.67)
EDUC	-.066 (3.71)	.032 (1.36)	.028 (1.15)	-.068 (3.68)	.027 (1.15)	.026 (1.05)	.064 (.79)	.067 (.67)
AGE	.027 (1.37)	.037 (1.82)	.036 (1.70)	.020 (.97)	.027 (1.27)	.029 (1.33)	.061 (.69)	.055 (.59)
PT	-1.608 (8.76)	-1.728 (9.16)	-1.629 (8.46)	--	--	--	--	--
SOUTH	-1.144 (10.63)	-1.174 (10.62)	-1.171 (10.41)	-1.181 (10.60)	-1.230 (10.68)	-1.235 (10.55)	-.771 (1.62)	-.734 (1.53)
SMSA	.178 (1.83)	.330 (3.28)	.339 (3.30)	.136 (1.36)	.298 (2.87)	.310 (2.92)	1.500 (2.43)	1.476 (2.39)
PROF	--	.137 (.64)	-.052 (.23)	--	.680 (3.40)	.470 (2.26)	--	.243 (.36)
MANG	--	-1.366 (3.78)	-1.420 (3.83)	--	--	--	--	--
SALES	--	-.108 (.55)	-.395 (1.90)	--	.391 (2.05)	.192 (.97)	--	.175 (.34)
CRAFT	--	.921 (4.39)	.628 (2.70)	--	1.485 (7.45)	1.227 (5.72)	--	.652 (.79)
OPER	--	1.272 (6.80)	.837 (3.86)	--	1.854 (10.28)	1.476 (7.34)	--	-.100 (.13)
LABOR	--	1.235 (5.11)	.843 (3.21)	--	1.815 (7.45)	1.502 (5.78)	--	.882 (1.06)
CONSTR	--		-.220 (.86)	--	--	.216 (.91)	--	--
MFG	--	--	-.064 (.30)	--	--	.546 (3.00)	--	--
TRANS	--	--	.916 (3.84)	--	--	1.395 (6.34)	--	--
TRADE	--	--	-.699 (2.97)	--	--	-.561 (2.48)	--	--
FIN	--	--	-.360 (1.71)	--	--	.245 (1.27)	--	--
SERV	--	--	-1.932 (8.92)	--	--	--	--	--
N	3669	3669	3669	3060	3060	3060	609	609
Sample[b]	ALL	ALL	ALL	FULL	FULL	FULL	PTIME	PTIME
χ^2 (df)	393.7	577.4 (13)	696.4 (19)	283.1 (6)	461.2 (11)	545.5 (16)	18.1 (6)	20.5 (11)
Ratio Index	.106	.155	.187	.085	.138	.166	.068	.077

a. Reported coefficients are maximum likelihood estimates of the parameters of a logit model in which dependent variable, UNION, assumes the value 1 if the respondent is a union member, 0 otherwise. The absolute value of asymptotic t-statistics appear in parentheses. Independent variables are defined in Table A4.1.

b. ALL indicates the entire sample. FULL indicates the sample of all respondents with usual hours of work (per week) ≥ 35, and PTIME indicates the sample with usual hours < 35. In estimating the model for the PTIME sample of all of the industry and some of the occupation variables are omitted because of insufficient variation or representation.

Table A4.3

Derivatives Evaluated at the Mean: Union Membership Model
Stratified by Fulltime-Parttime Workers[a]

	(1) Prob(UN)	(2) Prob(UN)	(3) Prob(UN)	(4) Prob(UN)	(5) Prob(UN)	(6) Prob(UN)	(7) Prob(UN)	(8) Prob(UN)
RACE	.067	.051	.048	.090	.077	.075	-.012	-.013
SEX	-.139	-.087	-.072	-.181	-.112	-.110	.021	.033
EDUC	-.009	.004	.003	-.011	.004	.004	.003	.003
AGE	.004	.005	.004	.003	.004	.004	.003	.002
PT	-.224	-.224	-.196	-	-	-	-	-
SOUTH	-.160	-.152	-.141	-.194	-.191	-.186	-.031	-.029
SMSA	.025	.043	.041	.022	.046	.047	.061	.058
PROF	-	.018	-.006	-	.106	.071	-	.010
MANG	-	-.177	-.171	-	-	-	-	-
SALES	-	-.014	-.048	-	.061	.029	-	-.007
CRAFT	-	.119	.076	-	.231	.184	-	.026
OPER	-	.165	.101	-	.289	.222	-	-.004
LABOR	-	.160	.102	-	.282	.225	-	.035
CONSTR	-	-	-.027	-	-	.033	-	-
MFG	-	-	.008	-	-	.082	-	-
TRANS	-	-	.110	-	-	.209	-	-
TRADE	-	-	-.084	-	-	-.084	-	-
FIN	-	-	-.043	-	-	.037	-	-
SERV	-	-	-.233	-	-	-	-	-
Sample[b]	ALL	ALL	ALL	FULL	FULL	FULL	PTIME	PTIME

a. The dependent variable (UN) assumes the value 1 if the respondent is a union member, 0 otherwise. Independent variables are defined in Table A4.1.

b. See footnote b. to Table A4.2.

TABLE A4.4

Linear Regression Estimates of the Sex Differential in Union Memberships[a]

Dependent Variable (Sample)	Sample Size	Limited Specification[b]	Full Specification[c]
Union/Nonunion (Complete Sample)	3669	-.143 (10.92)	-.080 (5.40)
Collective Bargaining/ Not Collective Bargaining (Complete Sample)	3669	-.155 (11.03)	-.093 (5.92)
Union/Nonunion (Restricted: Respondents covered by Collective Bargaining)	922	-.067 (2.35)	-.018 (.57)

a. t values in parentheses.

b. Limited specification includes as independent variables sex, race, region, parttime status, age, education, SMSA.

c. Full specification adds occupation and industry to the limited specification.

CHAPTER V

The Determinants of Job Changing Activity Among Youth

Frequent job changing is a central characteristic of the youth labor market. In the past, the proportion of 18 to 24 year olds who change jobs has been at least twice as high as for the population as a whole.[1] Other data suggest that newly hired workers are much more likely to change jobs than more experienced workers, with a sharp increase in job stability when the individual has been on the job a year or more.[2]

Researchers disagree on the desirability and implications of this turnover. Some argue that the high turnover rates among youth are the result of a useful process of gathering market information. Before long term job commitments can be made, information is needed on both sides of the market. New workers and employers have imperfect information about each other, which only direct contact can remedy. Workers must learn about working conditions and future prospects with the firm; employers have only limited information on the actual productivity of newly hired workers.[3] With sufficient flexibility in the firms' ability to adjust wages and working conditions, mismatches can be rectified by renegotiating employment contracts. Otherwise, separations frequently occur; both workers and employers must search for improved matches. In this setting turnover is desirable, facilitating an improvement in the worker-job match.

Contrasting with this view is the argument that much of the turnover in the youth labor market is random and undirected. In other words, turnover is excessive and seriously aggravates the problem of high unemployment. Hall (1970) presents the argument quite clearly:

> The central problem seems to be that some groups in the labor force have rates of unemployment that are far in excess of the rates that would accord with the hypothesis that the unemployed are making a normal transition from one job to another. Some groups exhibit what seems to be pathological instability in holding jobs. Changing from one low-paying, unpleasant job to another, often several times a year, is the typical pattern of some workers. (p. 389)

Unfortunately, choosing between competing interpretations of the purposiveness of job changing activity in the youth labor market is hampered by a lack of solid empirical evidence. In this chapter, we begin our examination of this issue, investigating the determinants of turnover in the youth labor market.

5.1 A Model of Labor Turnover

In competitive labor markets, noncompensating wage differentials erode over time. Wages increase for workers receiving less than their potential and fall for those earning more. Frequently, however, existing differentials cannot be liquidated if workers remain at their current jobs. Nominal wages are often inflexible, particularly downward, and an individual worker's

productivity at the current job may be lower than at alternative jobs. In such instances, labor turnover becomes important to the efficient operation of the labor market.

The turnover response of workers to wage differentials has been extensively analyzed, with researchers typically relating industry quit rates to interindustry wage differentials.[4] The general finding of this research is a negative relationship between quit rates and wage differentials, supporting the contention that the wage structure stimulates a desireable (more efficient) allocation of resources in the labor market. That is, workers move to jobs where their capabilities will be effectively utilized. Empirical studies of the determinants of layoffs have been more limited, concentrating on the role of such factors as firm-specific human capital and union membership.[5]

A limitation of most empirical studies of labor turnover is the use of current wage as the major incentive variable. Both within and among industries, workers differ in their productive capabilities and, in a competitive market, wage rates vary among workers to reconcile these productivity differences. As Parsons (1977, p. 207) notes in his recent survey of labor turnover studies, "the quit probability should be negatively related to one's current wage relative to the mean of one's alternative wage distribution... [but]...only information on current wage is directly observable and available." What is needed, given the heterogeneity of workers and jobs, is a worker-specific measure of alternative opportunity.

In the preceding chapter, we developed the concept of the market differential--the gap between a worker's current and market or potential wage.

The market differential is a measure of alternatives, conveying information to both worker and employer. To a worker, it indicates the potential increase or decrease in wage rates he could expect if he changes jobs. To an employer, the market differential indicates that a gap exists between the worker's current wage and the market rate. Maximizing behavior by workers and employers implies that negative market differentials (market wage greater than current wage) will stimulate quits, and that positive differentials will encourage layoffs.

In addition to the market differential, many other factors influence turnover decisions. Workers consider nonwage characteristics of the current job and costs of changing jobs; employers consider severance payments and hiring costs. Both groups are influenced by the potential loss of firm-specific human capital,[6] and the state of aggregate economic conditions.

Equation (5.1) describes a model of job turnover that incorporates some of these concerns:

$$TURN_{j(a,\ a+1)} = TURN\ (MDa,\ Z_a), \qquad (5.1)$$

where

a = age at initial survey,

a + 1 = age at subsequent survey,

$TURN_{j(a,\ a+1)}$ = the probability of turnover alternative j between age a and a + 1 (the four alternative forms of turnover considered are: QT = quit, LO = layoff, OR = other job changers, and SJ = job stayers).

MD_a = market differential at age a,

Z_a = vector of other current job and situation variables at age a.

Turnover activity is described by four mutually exclusive and exhaustive variables indicating that a worker quit his job (QT), was laid off his job (LO), was discharged or left his job without reporting a reason (OR), or remained at his job (SJ) during the one year period between surveys. Each turnover variable assumes the value 1 if the alternative occurred, 0 otherwise. If multiple job changes occurred, the reason for the first job change dominates. Also, layoffs returning to the same employer are classified as job stayers.[7]

Details on the operational specification of the market differential variables are presented in Chapter IV. The other explanatory variables are constructed from responses to specific questions from the survey at the initial age and include: years of tenure at the current job; years of education completed; dichotomous variables indicating that the respondent is black or married; and the set of market opportunity variables indicating the year in which the respondent was the relevant age.

The turnover model is estimated using multinomial logit analysis, where the dependent variables are the alternative turnover activities. For each age, the sample examined is respondents the requisite age in any survey who were employed as wage and salary workers in that and the next year's survey. Respondents the required age in the final survey year (1970 for males and 1971 for females) are excluded since we cannot observe subsequent turnover activity. In addition, males the required age in 1966 are excluded because the 1967 survey did not obtain any information on reasons for job changes.

Besides including a worker-specific incentive measure, our analysis differs from most existing turnover studies by examining all turnover, delimited by type, in a unified framework. Also, our use of individual

microeconomic data to estimate the model complements the extensive analysis of labor turnover using industry data.[8]

5.2 The Determinants of Job Turnover

Table 5.1 describes the variables, reporting the mean values by subsequent turnover activity at ages 18 and 24 with the sample disaggregated by sex. Maximum likelihood estimates of the logit turnover model's parameters for the age 18-19, 20-21, and 24-25 iterations are reported in Tables 5.2 and 5.3. The reported estimates use the instrumental specification of the market differential variable--that is, the difference between the predicted human capital (or potential) wage and the predicted wage when structural variables are added.

Because only three of the four sets of coefficients are uniquely defined, we adopt a normalization rule of setting the job stayer parameters equal to zero. The reported parameters thus indicate the effects changes in independent variables have on the relative probability of a given turnover activity. Derivates evaluated at the means are reported in Tables 5.4 and 5.5. The derivatives reveal the marginal effect of a change in the independent variables on the absolute probability of a given turnover activity, in the vicinity of the sample means. (For a more detailed discussion of logit, see the appendix to Chapter III.)

Among our more interesting findings are the following:

Market Differentials

The market differential has a significant negative impact on the quit decision for males. Assuming mean values for the other variables, the age 24 results indicate that for a worker with a 20 percent positive differential

the probability of quitting is .14. If the same worker had a 20 percent negative differential, his probability of quitting would rise to .20. In other words, moving from a differential about one standard deviation below to a differential one standard deviation above the mean (MD_{24} has a standard deviation of .193) decreases the expected probability of quitting by about 43 percent. For young males voluntary turnover represents a purposive response to economic incentive.

Females are another matter. Here the impact of the market differential on the quit decision is usually insignificant. The coefficient does, however, become more negative with age. The voluntary turnover behavior of females thus appears to be much more undirected than that of males. Examining the effect voluntary turnover has on wage change in Chapter VII will help clarify these conclusions.

Our expectation that positive market differentials would increase the probability of being laid off is not supported by the data. For both sexes and at all ages, the market differential has an insignificant impact on the layoff decisions of employers.

If we replace MD with the residual specification of the market differential REDID, the results are not qualitatively altered; the level of significance in the quit equations increases slightly. For example, at age 24, the derivatives (and t-values) of RESID are -.06 (2.41) for males and -.05 (1.63) for females. If we replace MD with the traditional incentive variable used in mobility studies--actual wage or its logarithm--the estimated impact and level of significance in the quit equations are substantially below those obtained using either specification of the market differential variable.

Our results can be compared to Mellow (1977), who estimated a similar model of labor turnover with data taken from the NLS survey of middle-age males. The major difference in methodology is that here we stratify the sample by age. For the middle-aged males sample, the market differential has a slightly more significant negative impact on the probability of quitting and a highly significant positive impact on the probability of layoff. The fact that, for a given market differential, older workers are more likely to be laid off is somewhat surprising, given that employer's turnover costs are probably higher for older workers. One possible explanation for the result is that the market differential is measured with more error for younger workers. At young ages the measured human capital vector is more homogeneous and implicit purchases of training opportunities may be larger than for workers in the older age range. Measurement error in MD would bias the estimated impact of market differentials toward zero in the turnover model.

Job Tenure

The year-at-current job variable serves as a proxy for firm specific human capital, nonpecuniary benefits, and the general agreeableness of the worker-job match.[9] Consequently, it is not surprising that by age 20 job tenure is the dominant explanatory variable in the model, significantly reducing the probability of each turnover alternative. The strong showing of the job tenure variable coincides with the results of others.[10]

Race

Other things equal, blacks do not in general have significantly higher turnover probabilities. In interpreting this result recall, however, the rather specialized nature of our analysis. We examine young workers employed

in adjacent surveys. Workers leaving their current jobs but not employed at the time of the next year's survey are excluded from the analysis, as are workers still unemployed.

It is also important to remember that here we are examining turnover ~~and not flows into unemployment. Thus our findings should not be compared~~ to studies such as Hall (1972), who examines the impact race has on the probability of becoming unemployed. Only a small portion of job changing results in unemployment and as we will see in the next chapter, this proportion varies systematically by race.

In a study somewhat similar to our turnover analysis, Flanagan (1974) used the NLS young men's data to estimate separate models of the probability of quitting and being laid off. His procedure is much the same as ours. First, he estimates a potential wage regression. He then includes the residual from the wage regression as an incentive variable in the turnover analysis. His specification of the potential wage regression differs from ours in two important ways: he excludes race as a variable and includes industrial and locational variables. By including structural variables in his potential wage regression, Flanagan implicitly assumes that a worker's alternatives are limited to remaining within his current location and industry, a seemingly overrestrictive assumption. Our alternative treatment of race simply represents a difference in approach. We include race in the potential wage regression for two reasons: to control for unmeasured aspects of human capital and to isolate differentials not related to race, such as market enclaves and disequilibria. The same is true for our treatment of sex.

Since we have purged the market differential of its racial (and sexual) components, we consequently enter race (sex) as separate variables in the analysis, thus identifying their impact on turnover.

Given this difference in specification, Flanagan finds that being black has a significant positive impact on layoffs, but no detectable impact on quits. His wage residual variable has a significant negative impact on quits; an insignificant positive impact on layoffs. He interprets the negative coefficient of the wage residual in the quit equation as indicating that "the effect of wage discrimination and occupation segregation is clearly to raise the probability of black quits" (p. 23). By including a control for race (or stratifying the sample by race), however, Flanagan removes that component of the wage residual he is most interested in. In contrast, our approach explicitly introduces the racial differential.

Education, Marital Status, and Sex

Education and marital status have little effect on turnover except among 18 year old males, where education significantly reduces the probability of quits and layoffs, and marriage increases the probability of all job changes. Estimates of the sex coefficient using the combined male and female samples (reported in Table 5.6) indicate that females are less likely to be laid off or to quit, and more likely to change jobs for other reasons. However, the reason-for-job-change variables are better identified in the male survey, which may seriously bias any inter-sex comparisons of type of turnover activity.

Aggregate Economic Conditions

Market opportunity variables, which control for variations in aggregate economic conditions by indicating the year respondents were the relevant age, actually refer to turnover activity during the next calendar year for men, during the current year for women.[11] Over the period 1966 to 1971, unemployment was initially low, moved slightly lower, and then, beginning in 1969, increased dramatically. Since aggregate data reveal that quits decrease and layoffs increase as economic conditions deteriorate, it is not surprising to find significant positive coefficients of variables for 1969, 1970, and 1971, in the layoff equations. (Even where the coefficients are not statistically significant, the 1969 coefficient is generally larger than the 1967 coefficient for men; 1970 is larger than 1969 for women.) Somewhat surprising, however, is the finding that the probability of quitting significantly increases after 1968 for women.

5.3 Selectivity Bias and the Draft

One shortcoming of our analysis of job turnover is that we eliminate respondents who are not interviewed or not employed in subsequent surveys. Many of these respondents were males drafted into the armed services during the Vietnam War. Before concluding, we briefly examine what effect excluding these respondents (who are not random with regard to individual characteristics) might have on results reported in Section 5.2.

Data on 18 year old males were examined to determine some of the characteristics of job leavers who were not employed in the subsequent survey. Observations were classified according to their most probable reason for

becoming a job leaver. The only respondents included in this tabulation were those interviewed in the subsequent survey (at age 19) who were not employed and those not interviewed because they were in the armed services.[12] Seventy-five percent of the 285 job leavers were in the armed services at the time of the second survey.

A turnover logit model which includes the four alternatives of the job change model presented in the previous section, plus a fifth alternative for the 285 nonemployed job leavers, was estimated. Being married significantly reduced the probability of being in this group; no other independent variables were significant, and coefficients for the other activities were virtually unchanged. These findings do not necessarily indicate that the estimated job change parameters would have been unchanged if the draft had not removed most of these job leavers from the survey, since there is some indication that the draft overselected the poor and black.[13] But the fact that race and education do not serve as good predictors of leaving suggests that the bias may be small.

5.4 Conclusions

In this chapter we examined some of the determinants of turnover in the youth labor market. Our major findings can be summarized as follows: For males, market differentials have a significant negative impact on the probability of quitting, and an insignificant impact on the probability of being laid off. The turnover behavior of females is not significantly affected by market differentials. Job tenure is a strong deterrent to any type of turnover, while being nonwhite or married has no significant independent effect. Controlling for other factors, females are less likely than males to quit or be

laid off, and more likely to change jobs for other reasons (although here the results are probably at least partially spurious because of data problems). Finally, a deterioration in aggregate labor market conditions increases the chances of being laid off.

Our findings indicate that for males voluntary turnover in the youth labor market represents an explicit attempt to improve economic position. Males who quit are those who receive less than their market wage. For both sexes, unsatisfactory job matches appear to be an important cause of youth turnover; the accumulation of job tenure rapidly diminishes the likelihood of changing jobs. It is noteworthy that job tenure is the only variable for which we observe a clear age-related variation in its impact on job changing. This suggests that an initial period of random search in the labor market quickly gives way to a more systematic pattern of job changing activities. However, an obvious limitation of the analysis is that we have only examined the determinants of turnover, not its economic consequences. In succeeding chapters we attempt to overcome this limitation by incorporating turnover behavior into investigations of unemployment and changes in wages between adjacent surveys (ages).

Footnotes to Chapter V

[1]Bancroft and Garfinkle (1963) report that 23.5 percent of 18 and 19 year old male workers and 24.4 percent of 20 to 24 year old male workers changed jobs in 1961 compared to 10.1 percent of all male workers.

[2]See Garfinkle (1964).

[3]See Spence (1973) for discussion of the importance of worker characteristics as "signals" in labor markets characterized by uncertainty.

[4]See for example, Stoikov and Raimon (1968), Burton and Parker (1969, Pencavel (1970), and Parsons (1972).

[5]See Parsons (1972) and Medoff (1976). For a recent survey of labor turnover studies, see Parsons (1977).

[6]To the extent that firm-specific human capital is correlated with the interaction term in the Stage II wage regression ($B\hat{\gamma}$ in equation 4.4), the instrumental specification of the market differential nets out an average return on such investments.

[7]For a detailed discussion and analysis of temporary layoffs--those returning to the same employer, see Feldstein (1975, 1976). In light of Feldstein's (1975) finding that approximately 85 percent of all layoffs return to their prior employer, studies that use industry data to estimate layoff equations (Parsons, 1972, and Medoff, 1976) are primarily analyzing the determinants of "temporary" layoffs.

[8]Other recent efforts using individual microeconomic data to investigate labor turnover include Hall (1972), Flanagan (1975) and Bartel and Borjas (1977).

[9]We do not control for all determinants of job changes. In addition, tenure itself is conditioned by turnover behavior. Consequently, to the extent that the unobservables are correlated with job tenure, job tenure becomes a proxy for the unmeasured factors. For a discussion of the implications of this problem see Heckman and Willis (1977).

[11]See footnote 10 in Chapter IV.

[12]Other noninterviewees are excluded because it could not be determined whether they left their prior jobs.

[13]For a further discussion, see Kohen and Shields (1977).

TABLE 5.1

Variables Used in Turnover Analysis[a]

Variable	Description	Mean Value by Dependent Variable Category Age 18							
		Male				Female			
		QT	LO	OR	SJ	QT	LO	OR	SJ
MD	Market differential	-.03	0	-.04	0	.04	.01	-.02	.02
CJT	Continuous years of employment with current or last employer	.45	.33	.30	.28	.27	.06	.22	.44
EDUC	Years of formal education completed	[illegible]	10.97	11.47	11.63	11.58	11.56	11.54	11.44
RACE (D)[b]	Respondent is nonwhite	.35	.37	.43	.29	.31	.25	.27	.24
MST (D)	Respondent is married	.16	.17	.17	.08	.16	.06	.14	.13
1967 (D)	Respondent was indicated age in 1967	.17	.27	.70	.34	--	--	--	--
1968 (D)[c]	Respondent was indicated age in 1968	.44	.30	.15	.35	.23	.19	.25	.46
1969 (D)	Respondent was indicated age in 1969	.39	.43	.15	.31	.39	.44	.43	.21
1970 (D)	Respondent was indicated age in 1970	--	--	--	--	.38	.38	.32	.32

TABLE 5.1 CONTINUED

Variables Used in Turnover Analysis

Variable	Mean Value by Dependent Variable Category Age 24							
	Male				Female			
	QT	LO	OR	SJ	QT	LO	OR	SJ
MD	-.03	-.01	-.03	.01	-.02	-.05	0	.01
CJT	.97	.50	.52	1.90	.87	.52	.66	2.40
EDUC	12.18	9.93	11.12	12.38	12.93	12.82	12.53	12.75
RACE	.23	.30	.35	.21	.31	.36	.31	.23
MST	.65	.66	.71	.71	.61	.64	.64	.62
1967	.33	.39	.65	.38	--	--	--	--
1968	.42	.29	.17	.35	.14	.18	.18	.40
1969	.25	.32	.18	.27	.32	.09	.45	.27
1970	--	--	--	--	.54	.73	.37	.33

a. The alternative dependent variables are: QT, quit last job; LO; laid off last job; OR, left last job for other reason; SJ, remained at last job.
b. Variables followed by (D) are dichotomous. They assume the value of 1 if the indicated requirement is met, 0 otherwise.
c. Omitted in estimation.

TABLE 5.2[a]

DETERMINANTS OF TURNOVER ACTIVITY: AGE 18, 20, 24 MALES

Variable	AGE 18				AGE 20			
	$\ln\left\{\frac{Prob\ (QT)}{Prob\ (SJ)}\right\}$	$\ln\left\{\frac{Prob\ (LO)}{Prob\ (SJ)}\right\}$	$\ln\left\{\frac{Prob\ (OR)}{Prob\ (SJ)}\right\}$	χ^2 (d.f.)	$\ln\left\{\frac{Prob\ (QT)}{Prob\ (SJ)}\right\}$	$\ln\left\{\frac{Prob\ (LO)}{Prob\ (SJ)}\right\}$	$\ln\left\{\frac{Prob\ (OR)}{Prob\ (SJ)}\right\}$	χ^2 (d.f.)
MO	-.858 (2.05)	.018 (.03)	-.983 (1.27)	5.53 (3)	-1.649 (3.42)	-.116 (.16)	-.934 (.92)	12.23 (3)
CJT	.166 (2.36)	.058 (.46)	-.002 (.01)	5.70 (3)	-.232 (2.27)	-.309 (1.79)	-.217 (.99)	8.30 (3)
EDUC	-.140 (2.62)	-.202 (2.77)	.022 (.20)	11.95 (3)	-.081 (1.80)	-1.00 (1.52)	.049 (.47)	5.16 (3)
RACE	.089 (.49)	.171 (.61)	.691 (2.13)	4.78 (3)	.027 (.11)	.150 (.44)	.579 (1.22)	1.63 (3)
MST	.635 (2.59)	.663 (1.86)	1.004 (2.29)	11.55 (3)	.295 (1.36)	-.089 (.26)	.295 (.64)	2.36 (3)
1967	-.921 (4.10)	-.015 (.04)	1.673 (3.89)	35.25 (3)	-.060 (.24)	-.236 (.52)	1.898 (2.99)	9.51 (3)
1969	-.011 (.06)	.511 (1.69)	.148 (.27)	3.01 (3)	.307 (1.29)	1.156 (3.24)	.460 (.60)	11.33 (3)
Constant	.403 (.62)	-.366 (.41)	-4.262 (3.11)	10.79 (3)	-.405 (.66)	-1.334 (1.46)	-4.847 (3.18)	11.73 (3)
N				1027				722
χ^2				101.67 (21)				68.54 (21)
Ratio Index				.055				.054

TABLE 5.2 CONTINUED

Variable	AGE 24			
	$\ln\left\{\frac{\text{Prob (QT)}}{\text{Prob (SJ)}}\right\}$	$\ln\left\{\frac{\text{Prob (LO)}}{\text{Prob (SJ)}}\right\}$	$\ln\left\{\frac{\text{Prob (OR)}}{\text{Prob (SJ)}}\right\}$	χ^2 (d.f.)
MD	-1.014 (1.99)	-.321 (.40)	-.821 (.69)	4.14 (3)
CJT	-.322 (4.55)	-.656 (3.92)	-.633 (2.41)	37.86 (3)
EDUC	-.049 (1.36)	-.257 (4.85)	-.147 (1.76)	24.88 (3)
RACE	-.099 (.38)	-.192 (.51)	.280 (.50)	.70 (3)
MST	-.121 (.54)	-.001 (0)	.233 (.42)	.52 (3)
1967	-.369 (1.54)	.108 (.27)	1.125 (1.69)	5.93 (3)
1969	-.277 (1.06)	.168 (.39)	.135 (.16)	1.51 (3)
Constant	-.083 (.16)	1.098 (1.53)	1.871 (1.50)	5,48 (3)
N				700
χ^2 (df)				99.42 (21)
Ratio Index				.089

a. Reported coefficients are maximum likelihood estimates of the parameters of a multinomial logit model. The alternative dependent variables are defined in footnote a of Table 5.1. The absolute value of asymptotic t-statistics appear in parentheses. The χ^2 statistics reported in each row test the null hypothesis that all parameters estimated for a given independent variable are zero. The χ^2 statistics reported at the bottom of the table test the null hypothesis that all parameters (except the constant) are zero.

TABLE 5.3[a]

DETERMINANTS OF TURNOVER ACTIVITY: AGE 18, 20, 24 FEMALES

Variable	AGE 18				AGE 20			
	$\ln\left\{\frac{Prob\ (QT)}{Prob\ (SJ)}\right\}$	$\ln\left\{\frac{Prob\ (LO)}{Prob\ (SJ)}\right\}$	$\ln\left\{\frac{Prob\ (OR)}{Prob\ (SJ)}\right\}$	χ^2 (d.f.)	$\ln\left\{\frac{Prob\ (QT)}{Prob\ (SJ)}\right\}$	$\ln\left\{\frac{Prob\ (LO)}{Prob\ (SJ)}\right\}$	$\ln\left\{\frac{Prob\ (OR)}{Prob\ (SJ)}\right\}$	χ^2 (d.f.)
MD	.335 (.59)	-.266 (.20)	-1.064 (2.66)	9.48 (3)	-.734 (1.08)	-.318 (.27)	-.111 (.22)	1.31 (3)
CJT	-.157 (.93)	-1.914 (1.32)	-.385 (2.87)	9.77 (3)	-.371 (3.22)	-.553 (2.16)	-.834 (8.16)	72.03 (3)
EDUC	.189 (1.72)	.028 (.11)	.088 (1.14)	3.45 (3)	.153 (1.60)	.005 (.03)	-.034 (.54)	3.68 (3)
RACE	.281 (1.17)	-.170 (.28)	.022 (.12)	1.62 (3)	.256 (1.01)	.872 (2.04)	.029 (.15)	5.35 (3)
MST	.363 (1.18)	-.860 (.81)	.116 (.48)	2.24 (3)	.481 (2.01)	-.318 (.64)	.281 (1.58)	6.10 (3)
1969	1.294 (4.63)	1.250 (1.64)	1.247 (6.22)	47.18 (3)	.296 (1.03)	1.074 (1.72)	.813 (4.04)	17.80 (3)
1970	.841 (3.05)	.561 (.73)	.482 (2.43)	12.40 (3)	.351 (1.31)	1.094 (1.84)	-.071 (.34)	5.49 (3)
Constant	-4.177 (3.13)	-3.715 (1.24)	-1.769 (1.88)	11.75 (3)	-3.506 (2.80)	-3.541 (1.68)	.134 (.16)	11.27 (3)
N				843				873
χ^2 (df)				91.52 (21)				155.67 (21)
Ratio Index				.051				.084

TABLE 5.3 CONTINUED

Variable	AGE 24			
	$\ln\left\{\frac{Prob\ (QT)}{Prob\ (SJ)}\right\}$	$\ln\left\{\frac{Prob\ (LO)}{Prob\ (SJ)}\right\}$	$\ln\left\{\frac{Prob\ (OR)}{Prob\ (SJ)}\right\}$	χ^2 (d.f.)
MO	-.822 (1.09)	-1.500 (1.01)	-.485 (.80)	2.09 (3)
CJT	-.463 (4.41)	-.702 (2.19)	-.627 (6.48)	56.92 (3)
EDUC	.041 (.67)	.037 (.29)	-.008 (.16)	.66 (3)
RACE	.253 (.76)	.483 (.72)	.175 (.64)	1.09 (3)
MST	.050 (.16)	.199 (.30)	.088 (.35)	.19 (3)
1969	1.288 (2.84)	-.277 (.22)	1.259 (4.02)	20.91 (3)
1970	1.450 (3.40)	1.414 (1.72)	.684 (2.17)	15.85 (3)
Constant	-2.715 (2.90)	-4.053 (2.10)	-.965 (1.34)	11.74 (3)
N				522
χ^2 (df)				136.02 (21)
Ratio Index				.139

a. Reported coefficients are maximum likelihood estimates of the parameters of a multinomial logit model. The alternative dependent variables are defined in footnote a of Table 5.1. The absolute value of asymptotic t-statistics appear in parentheses. The χ^2 statistics reported in each row test the null hypothesis that all parameters estimated for a given independent-variable are zero. The χ^2 statistics reported at the bottom of the table test the null hypothesis that all parameters (except the constant) are zero.

Table 5.4

Derivatives Evaluated at the Mean: Turnover Analysis
Males Ages 18, 20, 24

Independent Variable	Age 18				Age 20			
	Prob(QT)	Prob(LO)	Prob(OR)	Prob(SJ)	Prob(QT)	Prob(LO)	Prob(OR)	Prob(SJ)
MD	-.124	.014	-.026	.136	-.240	.014	-.015	.241
CJT	.024	.002	-.001	-.025	-.030	-.015	-.004	.049
EDUC	-.019	-.011	.002	.028	-.011	-.005	.002	.015
RACE	.007	.008	.021	-.036	0.	.008	.013	-.021
MST	.082	.031	.026	-.139	.044	-.009	.006	-.040
1967	-.149	.007	.058	.085	-.015	-.016	.046	-.015
1969	-.009	.031	.004	-.026	.030	.065	.008	-.103

Table 5.4, continued

Independent Variable	Age 24			
	Prob(QT)	Prob(LO)	Prob(OR)	Prob(SJ)
MD	-.140	-.006	-.009	.153
CJT	-.040	-.021	-.008	.069
EDUC	-.005	-.009	-.002	.016
RACE	-.014	-.006	.004	.016
MST	-.018	.001	.004	.016
1967	-.056	.006	.017	.033
1969	-.041	.008	.003	.031

Table 5.5

Derivatives Evaluated at the Mean: Turnover Analysis
Females Ages 18, 20, 24

Independent Variable	Age 18				Age 20			
	Prob(QT)	Prob(LO)	Prob(OR)	Prob(SJ)	Prob(QT)	Prob(LO)	Prob(OR)	Prob(SJ)
MD	.095	.001	-.260	.164	-.075	-.005	.006	.073
CJT	.004	-.023	-.071	.090	-.008	-.006	-.157	.171
EDUC	.019	0.	.011	-.029	.018	0.	-.013	-.005
RACE	.033	-.003	-.008	-.022	.026	.021	-.022	-.025
MST	.040	-.013	.012	-.040	.043	-.011	.043	-.075
1969	.092	.008	.215	-.315	-.001	.019	.151	-.169
1970	.077	.003	.065	-.146	.038	.026	-.036	-.028

Table 5.5, continued

Independent Variable	Age 24			
	Prob(QT)	Prob(LO)	Prob(OR)	Prob(SJ)
MD	-.630	-.147	-.516	.013
CJT	-.030	-.006	-.079	.115
EDUC	.004	0.	-.002	-.002
RACE	.019	.005	.019	-.043
MST	.003	.002	.011	-.016
1969	.093	-.007	.156	-.242
1970	.115	.013	.069	-.197

Table 5.6

Turnover Analysis: Combined Sample

DETERMINANTS OF TURNOVER ACTIVITY: AGE 18 AND AGE 20 SAMPLES[a]

VARIABLE	AGE 18				AGE 20			
	$\ln\left(\frac{Prob(QT)}{Prob(SJ)}\right)$	$\ln\left(\frac{Prob(LO)}{Prob(SJ)}\right)$	$\ln\left(\frac{Prob(OR)}{Prob(SJ)}\right)$	χ^2 (d.f.)	$\ln\left(\frac{Prob(QT)}{Prob(SJ)}\right)$	$\ln\left(\frac{Prob(LO)}{Prob(SJ)}\right)$	$\ln\left(\frac{Prob(OR)}{Prob(SJ)}\right)$	χ^2 (d.f.)
CONSTANT	-.690 (1.22)	-.892 (1.10)	-4.418 (5.54)	30.98(3)	-.840 (1.54)	-1.685 (2.04)	-3.485 (4.59)	23.85(3)
MO	-.363 (2.05)	-.089 (.28)	-.536 (3.02)	10.99(3)	-.733 (3.62)	-.167 (.51)	-.253 (.71)	13.15(3)
EXP	.065 (1.02)	-.056 (.41)	-.230 (2.13)	6.55(3)	-.311 (4.03)	-.398 (2.77)	-.764 (8.07)	78.29(3)
ED	-.062 (1.34)	-.160 (2.40)	.029 (.47)	7.38(3)	-.046 (1.14)	-.075 (1.24)	-.049 (.96)	2.85(3)
RACE	.220 (1.52)	.147 (.59)	.162 (1.04)	2.92(3)	.123 (.71)	.432 (1.64)	.006 (.03)	3.00(3)
SEX	-.252 (1.56)	-1.033 (2.89)	3.320 (11.45)	152.31(3)	-.213 (1.13)	-.917 (2.76)	3.740 (9.41)	103.30(3)
MST	.532 (2.81)	.407 (1.24)	.333 (1.59)	9.05(3)	.346 (2.18)	-.149 (.54)	.292 (1.82)	7.56(3)
MO7	-.696 (3.17)	.108 (.33)	2.071 (5.92)	49.46(3)	-.023 (.10)	-.219 (.50)	2.054 (4.34)	19.62(3)
MO9	.432 (2.88)	.757 (2.75)	.960 (5.36)	36.65(3)	.329 (1.81)	1.176 (3.82)	.803 (4.26)	30.57(3)
MOO	.477 (2.09)	.583 (1.06)	.420 (2.17)	7.66(3)	.391 (1.61)	1.193 (2.59)	-.050 (.24)	9.28(3)
Log likelihood				-1758.96				-1451.28
χ^2 (d.f.)				466.67(27)				463.43(27)

a. Reported coefficients are maximum likelihood estimates of the parameters of a multinomial logit model. The alternative dependent variables are defined in footnote a. to Table 5.4. The absolute value of asymptotic t-statistics appear in parentheses. The χ^2 statistics reported in each row test the null hypothesis that all parameters estimated for a given independent variable are zero. The χ^2 statistics reported at the bottom of the table test the null hypothesis that all parameters (except the constant) are zero.

DERIVATIVES EVALUATED AT THE MEAN: AGE 18 AND AGE 20 SAMPLES

VARIABLE	AGE 18				AGE 20			
	Prob(QT)	Prob(LO)	Prob(OR)	Prob(SJ)	Prob(QT)	Prob(LO)	Prob(OT)	Prob(SJ)
MO	-.011	.002	-.043	.085	-.097	-.001	-.001	.099
EXP	.015	.002	-.023	.010	-.027	-.011	-.062	.100
ED	-.009	-.006	.005	.010	-.005	-.003	-.003	.011
RACE	.029	.004	.010	-.043	.014	.017	-.003	-.028
SEX	-.095	-.054	.321	-.173	-.084	-.054	.344	-.206
MST	.071	.011	.019	-.100	.040	-.010	.021	-.055
MO7	-.146	.001	.208	-.062	-.035	-.018	.186	-.133
MO9	.041	.023	.079	-.142	.024	.044	.062	-.129
MOO	.059	.018	.028	-.105	.046	.048	-.016	-.077

Chapter VI

Duration of Unemployment Among Job Changers

As documented in Chapter II, youth unemployment is disturbingly high. In this chapter we examine some of the determinants of unemployment duration for those workers in our samples who change jobs between adjacent ages. We confine our analysis to this restricted sample for several reasons. First, within the context of our recursive framework, unemployment as an intermediating activity in the equilibrating process deserves separate study. Second, we are unable to determine completed duration for respondents still unemployed at the time of the second survey. The major consequence of our selection procedures is to remove new entrants and reentrants from the analysis. Since these two groups constitute a significant proportion of unemployed youth,[1] the possible effects of excluding them should be kept firmly in mind. Complementing the age-stratified analysis of duration, the chapter also contains an investigation of the unemployment experiences of males aged 18-24 in 1966 over the 1966 to 1970 period.

6.1 Job Search, Unemployment Duration and Market Equilibration

The economics of job search contends that search is a productive, information generating activity. It is a topic that has stimulated considerable theoretical research, but only limited testing of key implications.[2] One important implication of theoretical models of job search is that a reduction in the cost of search increases the optimal amount of search. On the assumption that the duration of a spell of unemployment can serve as a proxy for the amount of search activity, several researchers have examined the impact that measures of search costs such as net assets and nonlabor income have on duration; many more have investigated the effect that unemployment insurance has on duration.[3]

If differential search costs affect search activity, the link between a worker's search costs, duration of unemployment, and subsequent wage rate is direct. All else equal, the worker with low search costs searches longer and obtains a wage that, on average, is in the upper portion of his wage distribution; he has a positive market differential. Conversely, the worker with high search costs engages in more restricted search, accepting employment at a wage that on average is in the lower portion of his distribution; he has a negative market differential. If search costs are correlated over time, the market differential would thus be an inverse indicator of present search costs.[4]

At the initial job, search cost (dis)advantages determine (in part) who has negative and who has positive differentials. However, the component of the differential attributable to differential search costs is not stable. Profit maximizing employers compensate workers for their productive capabilities, not for their search activity. Consequently, employers are not hesitant about trying to liquidate positive differentials. Workers located in low wage jobs because of high search costs are continually looking for ways to improve their economic position. In a labor market dominated by long run competitive forces yet characterized by costly information, two opposing forces are thus at work: market equilibrating forces stimulate the liquidation, and search cost (dis)advantages contribute to the maintenance of existing wage differentials. In this chapter we examine duration of unemployment among job changers. Assuming search costs are correlated over time, the interpretation sketched above[5] suggests that workers with negative differentials move quickly through the market changing jobs with little or no unemployment. On the other hand, workers with positive differentials who are forced into the market search longer, attempting to maintain their existing premiums.

Consequently, a negative relationship between the market differential and duration of a subsequent unemployment spell is expected.[6]

A major problem that needs to be considered before we proceed to outline an estimating equation is our use of unemployment duration as a proxy for the amount of search activity. Despite the fact that they are frequently identified as such duration of unemployment and the amount of search activity are not synonymous.[7] The unemployed usually to not engage in full-time search activity.[8] In addition, a substantial portion of search activity may take place at the prior job. Although we lack information on the intensity of search while unemployed, search at the prior job appears to be quite substantial. As indicated by the data presented in Table 6.1, only a small minority of the job changers in our samples experienced any unemployment.[9] For many changers, duration of unemployment thus appears to be a poor proxy for search activity. A partial correction for this deficiency is to control for differences in the reason for turnover. As Table 6.1 indicates, a higher percentage of layoffs experience some unemployment between jobs. We hypothesize that layoffs engage in less search at the prior job than quits.

In addition to the market differential and turnover variables, the set of explanatory variables used in the duration model includes a vector of personal characteristics (race, sex, education, current job tenure, and marital status), and the market opportunity variables (to control for variations in aggregate economic conditions). Equation (6.1) summarizes the model:

$$D_{a,a+1} = \beta_0 + \beta_1 MD_a + \beta_2 TURN_{a,a+1} + \beta_3 MO + \beta_4 PC + \varepsilon \qquad (6.1)$$

where

a = age at initial survey

a + 1 = age at subsequent survey

$D_{a,\ a+1}$ = duration of unemployment between ages a and a + 1,

MD_a = market differential at age a,

$TURN_{a,\ a+1}$ = type of turnover between ages a and a + 1 (alternatives are quits, layoffs, and other),

MO = vector of market opportunity variables,

PC = vector of personal characteristics,

ε = stochastic error term.

6.2 Empirical Findings

The duration model is estimated for the sample of respondents who were the requisite age in any survey, were employed as wage and salary workers in that and the next year's survey, and changed jobs between surveys.[10] Respondents in the final survey year are excluded since no information is available on subsequent duration. Unlike the turnover analysis, males the required age in 1966 are not excluded; their reason for job change is coded "other."

Table 6.2 describes the variables used in the analysis, along with their mean values. Tables 6.3 through 6.5 reported regression estimates of the duration model for the ages 18-19, 20-21, and 24-25 iterations, with the sample disaggregated by race and sex. For expository reasons, we refer to the initial age in discussing each iteration. Thus, for example, the age 18 to 19 iteration is called the age 18 iteration. The basic results can be quickly summarized.

Market Differential

For the combined sample, the market differential has a significant positive impact on expected duration in the age 18 and 20 iterations, but no detectable impact in the age 24 iteration. Its impact is uniformly greater for males than for females; greater for blacks than for whites. At age 18, a 20 percent positive differential (one standard deviation above the mean) implies increased unemployment

between job changes of slightly over one week for an otherwise average male.[11]

The finding that the market differential does not have an especially robust influence on duration is not challenged by several experiments not reported in the tables. If we substitute the residual specification RESID, the level of significance typically declines by about 5 percent; if we limit the sample to job changes with reported duration of one week or more, coefficients are always insignificant.

Expected duration is shorter for quits than layoffs, usually by two to three weeks. Younger males are the group for whom being a layoff increases unemployment the most. A problem with this part of the analysis, however, is that the reason for job change variable is often poorly defined.

Aggregate Economic Conditions

The economic downturn that began in late 1969 has a very pronounced effect on duration of unemployment. Changing jobs during 1970 instead of during 1969 was associated with a two to three week increase in expected duration for both males and females. (Note that the market opportunity variables actually refer to unemployment during the next calender year for men, during the current year for women; see Chapter IV, footnote 10.)

Personal Characteristics

In each age regression, blacks experience longer duration of unemployment than whites, with the magnitude of the gap increasing from under one week at age 18 to over two weeks at age 24. Females have about a two week increase in expected duration, with the greatest increase at age 24.

The impact of education and current job tenure is sporadic. Being married reduces expected duration by slightly more than one week. The relatively poor showing of these variables is consistent with findings of other researchers who have estimated duration of unemployment models for young workers. (Stephenson, 1976, and Ehrenberg and Oaxaca, 1976).

6.3 The Unemployment Experience: A Long Run Analysis

We have thus far examined the determinants of unemployment between job changes. This section provides an alternative, complementary view of unemployment in the youth labor market. Restricting the sample to all nonenrolled male wage and salary workers aged 18-24 in 1966 who were also employed in 1970, regression models of the total number of unemployment spells and the total weeks of unemployment over the four year period are estimated. Explanatory variables are defined as of 1966 and include the market differential, years education, marital status, years at current job, race, plus age. The results are summarized in Table 6.6.

The market differential has no detectable impact on either the incidence or duration of unemployment. Surprisingly, neither does age.[12] Education and current job tenure reduce both incidence and duration by proportionate amounts, while being married has no impact on incidence but a strong negative effect on duration. Blacks have a significantly higher incidence and duration of unemployment, with the duration effect being larger.

Some hypothetical calculations provide an indication of the magnitudes involved. All else equal, a black with 11 years of education can expect 1.13 unemployment spells lasting a total of 7.09 weeks; for a white with 13 years of education these expectations decline to .65 spells and only 3.09 weeks unemployed.

6.4 Conclusions

Although the scope of our analysis in this chapter is limited, its implications are important. The generally positive impact that the market differential has on duration of unemployment provides limited support for the hypothesis that those with lower search costs (positive market differentials) search longer. We also find expected duration lower among quits, whites, and females. Finally, aggregate economic conditions have a tremendous impact on

a job changer's expected spell of unemployment. All else constant, an 18-year old male changing jobs in 1970 could expect to be unemployed over 4 weeks longer than the same 18-year old changing jobs in 1967. For a 24-year old, the difference is 2.7 weeks. Complementing the age-stratified results, analysis of the unemployment experiences of a fixed cohort over a longer period indicates that blacks and the less educated experience much more unemployment--both in incidence and in duration of given spells. These results for wage and salary workers are consistent with the findings reported in Chapter III, which analyzed the labor market activities of the full sample of NLS respondents.

Footnotes to Chapter VI

[1]BLS data on reason for job change indicate that a large part of teenage unemployment can be traced to a pattern of frequent entry and reentry into the labor market. In 1975, for instance, the proportion of the teenage labor force unemployed because of labor force entry and reentry was 14.5 percent compated to an overall teenage unemployment rate of 20.5 percent. For youth ages 20-24, however, entry and reentry are much less important as reasons for unemployment. In 1975, 4.8 percent of the labor force in this age group was unemployed because of entry or reentry, compared to an overall group unemployment rate of 14.6 percent. These figures are calculated from tables 3 and 4 in Hedges (1976); similar results are also reported in Perry (1972).

[2]For an extended review of the various theoretical models of job search, see the recent survey of Lippman and McCall (1976).

[3]See, for example, Stephenson (1976) and Ehrenberg and Oaxaca (1976).

[4]Although the NLS does obtain information on proxies for search costs such as net assets, nonemployment income, and unemployment insurance benefits, there are several problems with using these more direct measures of search costs to explain duration of unemployment. Asset and income data appear to be unreliable and are only collected in selected years. In addition, measures of search costs such as unemployment insurance benefits are jointly determined with the duration of an unemployment spell.

[5]For a more extended development of the argument, see Mellow (1978a).

[6]If the implicit assumption that the searcher has perfect knowledge of his wage distribution is not satisfied, a worker's market differential might be positively related to his perception error. If, for instance, a worker's positive differential is pure economic rent (as, for example, returns to a protected enclave), he may not recognize that he was paid more than his market worth and initially overestimate his wage distribution. Adopting an inappropriate search strategy would thus result in a positive relation between the market differential and subsequent duration. Consequently, to the extent that perception errors are common, we may erroneously conclude that the data show a relation between search costs and duration when in fact the relation estimated has a different interpretation.

[7]McCall (1970) makes the identification clear at the outset: "The amount of search <u>or</u> the period of unemployment..." (p. 114) (emphasis added); others are less direct. Alchian (1970), for example, accepts the possibility of search at the prior job but argues that since search is more efficient when the job seeker is unemployed--or, as he puts it, self-employed in the full time accumulation of information--the job seeker will voluntarily become unemployed.

[8]For evidence on this point, see Gordon (1973) and Barron and Mellow (1978).

[9]This observed high percentage of direct job changers, particularly among quits, is consistent with earlier findings. Mattila (1974), for example, presents estimates, obtained from a wide array of data sources (collected at various points in the business cycle and across various demographic groupings), that indicate "at least 50 to 60 percent of all quits move from job to job without ever experiencing unemployment." (p. 238)

[10]By omitting respondents still unemployed at the time of the subsequent survey, we are truncating the distribution of unemployment duration. There are obvious problems of selectivity bias associated with this procedure. Most other studies using NLS data to examine unemployment duration also have this limitation; see, for instance, Ehrenberg and Oaxaca (1976).

[11]In their analysis of unemployment duration using NLS youth data, Ehrenberg and Oaxaca (1976) included several direct proxies for search costs. Of these, only the coefficient on a variable measuring unemployment insurance benefits was significant. Recall our earlier comment (footnote 4) that there may be possible simultaneity problems here, however.

[12]The simple correlation between age and education for this sample is only .10.

Table 6.1

Job Changers Moving Directly to a New Job Without Any Intervening Unemployment, By Reason for Job Change: Ages 18 - 19[a]

Reason For Leaving Age 18 Job	Total in Group				Total in Group With No Reported Unemployment				Percent in Group Making Direct Job Change			
	White Males	Nonwhite Males	White Females	Nonwhite Females	White Males	Nonwhite Males	White Females	Nonwhite Females	White Males	Nonwhite Males	White Females	Nonwhite Females
Layoff	45	29	12	4	31	18	8	0	68.9	62.1	66.7	0
Quit	149	74	83	37	118	57	61	26	79.2	77.0	73.5	70.3
Other	88	45	220	80	68	31	140	43	77.3	68.9	63.6	53.8
All Job Changers	282	148	315	121	217	106	209	69	77.0	71.6	66.3	57.0

a. In each survey individuals were asked the amount of unemployment experienced (in weeks) during the preceding 12 months. For job changers the reported duration of unemployment is attributed to the job change. This assumes job changers not reporting any (one week or more) unemployment moved directly to the new job.

TABLE 6-2

Variables Used in Duration of Unemployment Analysis

Variable	Description	Mean			
		Ages 18 - 19		Ages 24 - 25	
		Male	Female	Male	Female
MD_a	Market differential age age a	-.019	-.002	-.023	-.011
$QUIT_{a,\ a+1}$ (D)[a]	Left job at age a because of quit	.519	.275	.525	.342
$LAY_{a,\ a+1}$ (D)	Left job at age a because of layoff	.172	.037	.196	.060
$OTHER_{a,\ a+1}$ (D)[b]	Left job at age a for other reason.	.309	.688	.279	.615
1966 (D)	Respondent was age a in 1966	.258	--	.246	--
1967 (D)	Respondent was age a in 1967	.200	--	.288	--
1968 (D)[b]	Respondent was age a in 1968	.272	.241	.271	.170
1969 (D)	Respondent was age a in 1969	.270	.417	.196	.385
1970 (D)	Respondent was age a in 1970	--	.342	--	.445
$EDUC_a$	Years of formal education completed	11.24	11.55	11.58	12.68
MST_a (D)	Married at age a	.147	.140	.688	.632
CJT_a	Continuous years of employment with current or last employer	.174	.224	.725	.719
RACE (D)	Respondent is nonwhite	.344	.278	.254	.313
$WKUN_{a,\ a+1}$	Weeks unemployed between ages a and a + 1	2.81	2.43	2.31	2.53

a. Variables followed by (D) are dichotomous. They assume the value 1 if the indicated requirement is met, 0 otherwise.
b. Ommited in estimation.

Table 6.3

Duration of Unemployment Regressions: Age 18[a]

Independent Variables	Males			Females			Comb'd
	Black	White	Comb'd	Black	White	Comb'd	
MD	6.958	4.321	5.442	3.287	-.544	.532	2.917
	(3.33)	(2.69)	(4.29)	(1.20)	(.40)	(.44)	(3.32)
QUIT	-.241	1.021	.623	-1.991	-.220	-.692	-.407
	(.17)	(1.20)	(.85)	(1.68)	(.36)	(1.28)	(.93)
LAY	3.185	4.264	3.594	.550	-.038	.175	2.436
	(1.99)	(3.97)	(4.07)	(.18)	(.03)	(.14)	(3.67)
1966	1.230	1.633	1.520	-	-	-	.295
	(.72)	(1.64)	(1.75)				(.41)
1967	-.814	-.463	-.427	-	-	-	-1.310
	(.57)	(-.50)	(.55)				(1.87)
1969	2.957	2.404	2.617	1.405	.085	.566	1.455
	(2.34)	(3.01)	(3.84)	(.89)	(.12)	(.88)	(3.18)
1970	-	-	-	2.883	2.873	2.971	3.526
				(1.76)	(4.08)	(4.53)	(5.96)
EDUC	.076	-.349	-.124	-.221	-.369	-.353	-.177
	(.32)	(1.72)	(.81)	(.69)	(1.01)	(1.61)	(1.42)
MST	-2.982	.556	.828	-2.221	-.872	-1.347	-1.116
	(2.31)	(.65)	(1.16)	(1.44)	(1.09)	(1.92)	(2.22)
CJT	-.418	-.081	-.198	-.190	-.120	-.077	-.097
	(1.09)	(.35)	(1.00)	(.16)	(.33)	(.20)	(.56)
SEX	-	-	-	-	-	-	-1.707
							(3.18)
RACE	-	-	.866	-	-	.689	.716
			(1.59)			(1.25)	(1.84)
CONST	1.953	4.296	2.209	4.738	5.685	5.460	4.374
R^2	.205	.148	.154	.107	.084	.084	.101
SSE	5.617	4.850	5.137	5.731	4.669	4.967	5.091
N	148	282	430	121	315	436	866

a. The dependent variable is duration of unemployment in weeks, as described in footnote a. to Table 6.1. The absolute value of asymptotic t-statistics appear in parentheses.

Table 6.4

Duration of Unemployment Regressions: Age 20[a]

Independent Variables	Males			Females			Comb'd
	Black	White	Comb'd	Black	White	Comb'd	
MD	7.659 (1.58)	2.928 (1.35)	4.354 (2.15)	5.809 (1.47)	-.987 (.59)	1.503 (.92)	3.190 (2.51)
QUIT	-1.592 (.44)	-2.491 (1.56)	-2.295 (1.53)	-1.377 (.78)	-.861 (1.24)	-1.098 (1.57)	-1.561 (2.39)
LAY	-2.451 (.58)	1.071 (.58)	-.110 (.06)	-2.774 (1.11)	-.252 (.18)	-1.262 (1.01)	.019 (0.)
1966	-2.429 (.55)	-.433 (.22)	-.943 (.51)	-	-	-	-1.679 (1.4[illegible])
1967	2.081 (.59)	-.252 (.18)	.463 (.34)	-	-	-	-.632 (.59)
1969	3.817 (1.29)	2.034 (1.49)	2.777 (2.19)	1.430 (.69)	-.940 (1.17)	-.455 (.56)	.905 (1.33)
1970	-	-	-	6.259 (2.81)	1.132 (1.44)	2.408 (2.96)	3.224 (3.95)
EDUC	-.186 (.41)	-.308 (1.53)	-.253 (1.35)	-.253 (.46)	-.462 (1.99)	-.430 (1.89)	-.294 (2.13)
MST	-2.569 (1.16)	-.535 (.52)	-1.183 (1.25)	-.489 (.29)	-.873 (1.41)	-.626 (.99)	-.860 (1.60)
CJT	-.335 (.46)	-.325 (.80)	-.327 (.93)	-.717 (.63)	-.709 (1.94)	-.597 (1.55)	-.368 (1.48)
SEX	-	-	-	-	-	-	-2.343 (2.89)
RACE	-	-	.156 (.16)	-	-	1.953 (2.89)	1.103 (1.95)
CONST	7.168	7.814	7.269	5.379	8.899	7.880	8.011
R^2	.106	.096	.076	.125	.060	.088	.066
SSE	9.227	6.678	7.411	7.877	4.994	5.973	6.625
N	82	214	296	119	294	413	709

a. See footnote a. to Table 6.3.

Table 6.5

Duration of Unemployment Regressions: Age 24[a]

Independent Variables	Males			Females			Comb'd
	Black	White	Comb'd	Black	White	Comb'd	
MD	2.448	-.147	.690	2.065	-6.155	-2.427	-.698
	(.75)	(.09)	(.46)	(.40)	(2.37)	(1.02)	(.52)
QUIT	-1.774	.372	-.161	.976	-2.354	-1.173	-1.195
	(.54)	(.33)	(.13)	(.36)	(2.28)	(1.09)	(1.58)
LAY	4.583	3.128	3.362	1.580	-3.936	-1.856	1.640
	(1.40)	(2.56)	(2.66)	(.33)	(1.84)	(.88)	(1.65)
1966	-.342	1.195	.566	-	-	-	.028
	(.09)	(.93)	(.42)				(.88)
1967	3.537	-.275				-	-.222
	(1.33)	(.38)	(.54)				(.24)
1969	2.284	2.352	2.173	-3.214	-.906	-.791	1.106
	(.82)	(2.99)	(2.46)	(.92)	(.60)	(.54)	(1.39)
1970	-	-	-	.162	1.689	1.375	2.273
				(.05)	(1.10)	(.98)	(2.27)
EDUC	.149	-.002	.065	-.254	.318	.096	.065
	(.44)	(0.)	(.64)	(.56)	(1.70)	(.50)	(.67)
MST	-1.740	-1.002	-1.291	-5.065	.286	-1.686	-1.448
	(.95)	(1.70)	(2.01)	(2.08)	(.29)	(1.66)	(2.52)
CJT	1.180	.041	.242	-1.726	-.321	-.470	.030
	(1.72)	(.24)	(1.22)	(1.34)	(.98)	(1.26)	(.16)
SEX	-	-	-	-	-	-	-1.614
							(1.70)
RACE	-	-	2.119		-	2.235	2.299
			(2.96)			(2.06)	(3.68)
CONST	1.413	1.003	.479	11.587	-1.744	2.167	2.335
R^2	.220	.162	.169	.132	.145	.083	.091
SSE	6.756	3.524	4.559	8.700	5.172	6.549	5.532
N	61	179	240	57	125	182	422

a. See footnote a. to Table 6.3.

TABLE 6.6

Unemployment Experiences 1966-1970:
Males Aged 18-24 in 1966[a]

Independent Variable	Mean	Dependent Variable: Number of Unemployment Spells	Dependent Variable: Weeks of Unemployed
MD	.01	.137 (.49)	.152 (.31)
EDUC	11.30	-.115 (4.79)	-.581 (4.86)
MST	.52	-.076 (.64)	-1.94 (3.03)
CJT	.22	-.126 (3.94)	-.514 (2.94)
RACE	.27	.258 (2.03)	2.834 (4.09)
AGE	21.36	.030 (.99)	-.039 (.24)

a. The sample is males aged 18-24 in 1966, not enrolled, and employed as wage and salary workers who were also employed as wage and salary workers in 1970. All independent variables are constructed with data from the 1966 survey. The dependent variables are constructed by summing data from the 1967 through 1970 surveys. The means are .89 and 4.78 for number of spells and duration respectively. The absolute values of t-statistic appear in parentheses.

CHAPTER VII

Wage Growth: The Acquisition of Productive Skills and Market Equilibration

With this chapter the analysis comes full circle, returning to the topic of wage determination in the youth labor market. Now, the focus of our inquiry is the determinants of wage growth between adjacent ages. In our investigation, we explicitly examine the influences that market alternatives (as indicated by the worker's market differential at the initial age), improvements in skill levels between ages, and changes in aggregate labor market conditions have on the pattern of wage growth. As the final component in our recursive model, the analysis also considers the effects that job changes and unemployment have on wage growth.

7.1 The Wage Growth Process

The hypothesis that market forces erode noncompensating wage differentials is equivalent to saying that a worker's wage change depends (in part) on his market differential. That is, a worker with an initial wage greater (less) than his capabilities warrant will experience below (above) average wage growth.

As discussed in earlier chapters, turnover and unemployment may intermediate in the wage growth process. Since the market differential affects these activities, including turnover and unemployment duration in the analysis allows us to distinguish the market differential's impact on wage growth from its indirect impact, operating through the channels of turnover and unemployment.

But, of course, wage growth is much more than simply an equilibrating phenomenon. Workers are constantly adding to their productive capabilities, and these increases command additional wage payments. Young people are particularly active in the acquisition of human capital between adjacent ages: completing an additional year of formal schooling; participating in training programs outside of school; and accumulating general work experience. These acquisitions should result in some immediate wage growth, although full returns are probably gathered over a period of years. Accordingly, the initial level of human capital may also influence wage growth. Finally, changes in aggregate economic conditions may affect wage paths among young workers.

A description of the wage growth process between adjacent ages that incorporates these concerns is represented by equation (7.1):

$$\ln(WAGE_{a+1}/WAGE_a) = \beta_0 + \beta_1 MD_a + \beta_2 HC_a + \beta_3 ADD_{a,\,a+1} + \beta_4 MO + \beta_5 TURN_{a,\,a+1} + \beta_6 WKUN_{a,\,a+1} + \varepsilon \qquad (7.1)$$

where,

a = age at initial survey

$a + 1$ = age at subsequent survey

WAGE = actual wage at indicated age

MD_a = market differential at age a

HC_a = vector of personal characteristics at age a (race, sex, marital status, education, job experience),

$ADD_{a,\,a+1}$ = vector of variables indicating increments of education, training, and experience added between ages a and a + 1,

MO = vector of market opportunity variables,

$TURN_{a,\ a+1}$ = vector of turnover variables indicating a quit, layoff, or other type of job change between ages a and a + 1,

$WKUN_{a,\ a+1}$ = weeks unemployed between ages a and a + 1, and

ε = stochastic error term.

The dependent variable approximates the percentage change in a worker's real wage between adjacent ages, and the market differential variable measures the direction and (in percentage terms) the magnitude of the gap between his actual and his market or potential wage at the initial age. A negative coefficient on the market differential variable is expected; a value of -1 would indicate the complete liquidation of an existing differential over the one year period between adjacent ages.

For a variety of reasons, however, we do not expect complete erosion of (measured) existing differentials. First, because of our inability to fully control for compensating variations and subtle differences in worker quality not captured by the human capital variables,[1] measured differentials overstate actual differentials. The effect of this overstatement is to bias downward our estimate of actual equilibration. Second, adjustments in the labor market are not costless. Firms face hiring costs and workers moving costs if turnover occurs. Because of these adjustment costs, some differentials will remain even at equilibrium; it is simply not economical to make the adjustments required to insure complete liquidation. Finally, we have arbitrarily adopted a one year time horizon, which may be too short for complete equilibration.

7.2 The Determinants of Wage Growth: Empirical Evidence

For each age, the wage change model is estimated for respondents in any survey who were employed as wage and salary workers in that and the next year's survey. As in the turnover and unemployment analyses, respondents the required age in the final survey year are excluded since we have no additional observation on their wage rate. Unlike the turnover analysis, we do not exclude males the required age in 1966; job changers in this group are designated "other."

Table 7.1 describes the variables and reports the mean values at ages 18 and 24 with the sample disaggregated by sex and race. Regression estimates of equation (7.1) are reported in Tables 7.2 through 7.4 for ages 18, 20, and 24.

In the wage growth regression, we use the instrumental specification of the market differential (equation 2.2c) rather than the residual specification. A major motivation behind our continued emphasis on this specification of the market differential now becomes clear. The residual specification is the difference between the log of actual wage and the log of predicted wage (that is, $RESID_a = lnWAGE_a - \widehat{lnWAGE_a}$). Consequently, any error in the measurement of $WAGE_a$ is included in the variable. But $WAGE_a$ is also a component of the dependent variable. Hence, using $RESID_a$ would result in a spurious negative correlation with the wage change variable, biasing the absolute magnitude of the estimated coefficient downward. In contrast, because MD_a is the difference between two wage instruments, it is independent of any measurement error in the wage variable.[2] Finally, in

the reported regressions, MD_a is sectored into positive (PMD) and negative (NMD) variables. Employers (workers) have the incentive to liquidate positive (negative) differentials; sectoring the differential into components tests for any asymmetry in the equilibrating process.

For expository reasons, we refer to the initial age in discussing each iteration. Thus, for instance, the age 18 to 19 iteration is called the age 18 iteration. Our findings can be summarized as follows:

Market Equilibration

The results indicate a strongly asymmetric pattern of equilibration in the youth labor market. Negative differentials are readily liquidated; positive differentials are not. In other words, workers receiving less than their market potential are successful in improving their economic condition. Employers seem unable to liquidate existing rents measured in absolute terms, but average wage growth is low for workers with positive differentials. Thus the relative position of those workers in the wage distribution deteriorates.[3]

For the full sample (column 7), 47 percent of an 18 year old's existing negative differential is eroded by age 19. (A negative coefficient for NMD implies a positive wage change since NMD is less than or equal to zero.) By age 20, liquidation of negative differentials increases to 58 percent, declining to 19 percent by age 24. The market's efficiency at liquidating negative differentials exceeds its ability to reduce positive differentials. Although the coefficient of the positive market differential is uniformly negative, it is significant only for the age 20 iteration.

Equilibration is generally greater for females (compare columns 1 and 4). At age 18, for instance, 76 percent of a female's negative differential is dissipated during the year, compared to 27 percent for males.

Disaggregating the sample into job changers and job stayers reveals the importance of direct market contact in facilitating equilibration. For all job changers (column 8), the coefficients of NMD range from -.46 to -.67 while the corresponding coefficients for job stayers (column 9) range from -.04 to -.45. With the exception of the age 18 iteration, liquidation of positive differentials is also greater among job changers.

Taken as a whole, these findings indicate that market forces function to facilitate the worker's attainment of his human capital or potential wage. Workers are not permanently trapped in jobs below their capabilities; however, some workers are able to maintain an enclave wage. We interpret the market differential variable as representing noncompensating occupational, industrial, and locational premiums. Consequently, the observed erosion of negative differentials is consistent with the findings of Leigh (1975) and Barnes and Kohen (1976), that the upward occupational mobility among young workers is substantial. The observed pattern of wage growth, however, is also consistent with Rosen's (1972) interpretation of wage differentials as representing differences in the amount of training purchased by young workers. In the Rosen framework, individuals with zero market differentials purchase the average training package offered in the market. Those with positive differentials purchase less than average training; those with negative differentials, more than average. In subsequent periods, returns are earned on current investments. Wage rates of those with above average train-

ing rise faster than average in subsequent years; conversely for workers with less than average training.

A similar analysis of wage change, using the NLS middle age data is reported in Mellow (1978b). With an older sample, much smaller amounts of training are implicitly purchased and the market differential variable has a clearer interpretation. The results of this analysis are quite similar. Examining wage growth between 1966 and 1967, NMD66 has a coefficient of -.19 (t-value 3.52) and PMD66 has a coefficient of .01 (t-value .14).

Job Changes and Unemployment Duration

The coefficients of the reason for job change variables are generally insignificant. Likewise, unemployment time does not appear to represent effective job search; it has no systematic impact on wage change. The indirect impact of market differentials (through their effects on turnover and unemployment) is small. Thus, although our results indicate that youth in jobs below their capabilities experience substantial upgrading and that direct market contact facilitates the upgrading process, we are nevertheless unable to detect specific turnover activities directly affecting wage growth at the new job.

There are several possible explanations. Recalling our discussion in Chapter VI, workers with positive differentials may be searching harder to

simply maintain wage premiums. That is, search cost (dis)advantages help determine one's place in the wage hierarchy at the first job, and in subsequent contacts extensive search is a mechanism for maintaining existing premiums in the face of liquidating pressures. Alternatively, unemployment may not be a proxy for search activity at all. Instead, it might represent a somewhat purposeless excursion marked by idle time and nonmarket activities. In contrast to the search theory expectation, a negative impact of unemployment on wage change would thus be expected. Indeed, unemployment at an early age might permanently scar workers or function as a population discriminant for workers with what employers regard as undesirable characteristics. We will explore the issue in more detail in the next section, where we examine the impact unemployment has on wage growth over a longer period.

Education, Training, and Work Experience

The pattern of significance for human capital variables is mixed. Looking at the full sample (column 7), initial levels of education and work experience have no significant impact on wage change (except for a perverse result on education in the age 18 iteration). An additional year of education (DEDUC) and participation in training during the year (DTRAIN) add significantly to wages only in the age 20 iteration.

The weeks worked variable (DEX) is significant at ages 18 and 24. The interpretation of this variable is clarified by calculating the impact on wage change of an additional year of employment. For example, multiplying the coefficient from the age 18 iteration (.00152) by 52 weeks, yields a 7.9 percent increase in wages for a full year of employment. This implies

that a year spent out of the labor force (but not in school or training) costs an 18-year-old 13.8 cents per hour in wages the next year, at the observed average wage rate of $1.75. Since average wage rates rise with age, the cost of time spent out of the labor force rises with age; for 24 year olds, the cost is 21.2 cents per hour. These results are comparable to Lazear's (1976) findings that, for NLS young males, a year out of the labor force between 1966 and 1969 costs the individual 14.8 cents per hour.

Personal attributes (race, sex, marital status) have no significant impact on wage change between ages. As the analysis in the next section will show, however, over a longer period of time the wage growth of blacks significantly exceeds that of whites, a result consistent with the findings reported in Chapter IV.

Aggregate Economic Conditions

The impact of the market opportunity variables also confirms the results obtained in Chapter IV. Real wages increase through 1968, and then decline significantly between 1969 and 1970, modestly between 1970 and 1971. A male becoming 19 in 1970 (his market opportunity variable is 1969) experienced a 6 percent average decline in real wages (column 1), 10 percent if he changes jobs and 3 percent if he does not (columns 2 and 3). Comparable females experienced declines in real wages of 14, 18, and 6 percent, respectively (columns 4, 5, and 6). The susceptibility to worsening aggregate economic conditions declines for older workers.

The decline in real wages among young workers can be compared to the overall movement in real wages over the period. Between 1970 and 1971, for instance, the average real wage of workers in the private nonfarm sector increased 2.7 percent. Thus, in addition to disproportionately high unemployment during economic downturns, young workers encounter a deteriorating wage position. Consequently, the hardships faced by youth during economic downturns will be seriously underestimated by looking simply at increased unemployment.

7.3 Wage Growth: A Long Run View

Examining wage growth over a one year time horizon may be too short a period to fully capture the cumulative effects of human capital acquisition and market equilibration. Consequently, to provide an alternative view of the wage growth process, this section examines the determinants of wage growth between 1966 and 1970 for a sample of males employed as wage and salary workers in both years. The model specification is roughly equivalent to equation (7.1). The market differential variable is the instrumental specification measured in 1966. The turnover variables are replaced by a composite variable: the number of unemployment spells between 1966 and 1970. Weeks unemployed are summed over the period. The human capital variables remain as before, only now the initial levels are as of 1966 and changes are measured over the 1966-70 period. Age in 1966 is added as an additional explanatory variable as is a dummy variable indicating the respondent was in the armed services. Table 7.5 defines the variables and reports the results of the analysis.

Extending the time horizon increases our estimate of market equilibration. Although we still detect a strong asymmetry in favor of negative differentials,

the coefficients on both the positive and negative variables are now significant. Workers in low wage jobs (relative to their skill levels) in 1966 substantially overcome the disadvantage by 1970; more than 62 percent of an initial negative differential is liquidated over the period. Older workers experience slower wage growth, confirming the hypothesis that human capital investments decline with age. As in Chapter IV, we find that, all else equal, blacks significantly improved their position in the wage distribution during the late 1960's; wages of blacks increased 5.4 percent more than those of whites. Marital status and current job tenure in 1966 have no impact on wage growth.

Only three of the intermediating activity variables significantly affect wage growth. The number of spells of unemployment and the total weeks of unemployment both reduce wage growth. Two 10 week spells of unemployment over the four year period, for instance, reduce the growth in real wages by about 9 percent.[4] Completing a formal training program results in a 4.5 percent wage increase. Surprisingly, weeks worked over the period, participation in the armed services, and completing additional education do not affect wage growth.

7.4 Conclusions

The bottom line in the wage change analysis is that we do not find workers permanently trapped in jobs below their capabilities. For the most part, however, we are unsuccessful in directly documenting specific labor market activities that encourage this equilibration. Although we could not identify any particular type of turnover as systematically affecting wage change, we do find that the liquidation of existing differentials is greater for those workers having direct market exposure.

As in other parts of our analysis, we find that declining aggregate economic conditions severely disrupt the youth labor market, in this instance calling a halt to any upward movement in real wage rates. It is the youngest workers in our sample who are most affected. Finally, when we analyze wage change over a longer period, we find that increased unemployment over the period is associated with a significantly lower final wage.

Footnotes to Chapter VII

[1]Possible sources of misspecification of the market differential are discussed in chapter IV.

[2]Spurious correlation is a problem commonly found in studies using microeconomic longitudinal data to estimate the effect that a worker's initial wage position has on subsequent change in his wage rate. Ehrenberg and Oaxaca (1976) and Taubman (1975), for example, examine the impact that current wage (earnings) has on subsequent wage (earnings) change. Using NLS data (all cohorts), Ehrenberg and Oaxaca estimate a 1966 to 1967 wage change equation that includes 1966 wage as an independent variable. Using NBER-Thorndike data, Taubman estimates a 1955 to 1969 earnings change equation that includes 1955 earnings as an independent variable. Both studies find that current wage (earnings) has a highly significant negative impact on wage (earnings) change. Because the market differential is a component of current wage (earnings) this implicitly supports our hypothesis that there is dynamic liquidation of existing market differentials. However, since current wage (earnings) also contains a measurement error component that is spuriously correlated with wage (earnings) change, the estimates are biased in a negative direction and it is unclear what implications emerge.

[3]Workers with positive market differentials experience slower wage growth than average; those with negative differentials, faster wage growth. The following tabulation for 18 and 20 year old males shows a substantial difference in mean wage change of workers grouped by market differential.

Differences are less significant at age 24.

Sample	Average Wage Growth at Age: 18 ¢/Hour	18 % Change	18 N	20 ¢/Hour	20 % Change	20 N
Full Sample	18.2	9.8	1344	20.4	9.6	936
MD < 0	23.0	14.2	665	37.6	19.5	435
MD > 0	13.6	5.6	679	5.5	1.0	501

[4]Limiting the analysis to males aged 18 to 20 in 1966, estimated equilibration is larger (the coefficients of PMD and NMD are -.406 and -.746) and unemployment experiences have a stronger negative impact on wage growth (the coefficients on the incidence and duration of unemployment variables are -.021 and -.004 respectively)

TABLE 7.1

Variables Used in Wage Change Analysis

Variable	Description	Means: Ages 18 - 19, Male	Means: Ages 18 - 19, Female	Means: Ages 24 - 25, Male	Means: Ages 24 - 25, Female
Market Differentials:					
MD_a	Market differential at age a	-.002	.010	-.001	.002
PMD_a	MD_a if $MD_a > 0$, 0 otherwise	.079	.084	.071	.074
NMD_a	MD_a if $MD_a \leq 0$, 0 otherwise	-.082	-.074	-.071	-.073
Turnover and Unemployment Variables:					
$LAY_{a,\ a+1}$(D)[a]	Left job at age a because of layoff	.055	.019	.049	.021
$QUIT_{a,\ a+1}$(D)	Left job at age a because of quit	.166	.142	.130	.113
$OTHER_{a,\ a+1}$(D)	Left job at age a for other reason	.099	.356	.069	.215
$STAY_{a,\ a+1}$(D)[b]	Same job at ages a and a + 1	.680	.483	.753	.651
$WKUN_{a,\ a+1}$	Weeks unemployed between ages a and a + 1	2.329	1.923	1.089	1.308
Market Opportunity Variables:					
1966 (D)	Respondent was age a in 1966	.236	--	.283	--
1967 (D)	Respondent was age a in 1967	.241	--	.271	--
1968 (D)	Respondent was age a in 1968[b]	.271	.349	.255	.318
1969 (D)	Respondent was age a in 1969	.252	.318	.192	.310
1970 (D)	Respondent was age a in 1970	--	.333	--	.372
Human Capital Variables:					
$EDUC_a$	Years of formal education completed	11.51	11.50	12.09	12.72
CJT_a	Continuous year of employment with current or last employer	.128	.329	1.384	1.813
$DEDUC_{a,\ a+1}$(D)	Completed an additional year of education between ages a and a + 1	.451	.384	.073	.025
$DEX_{a,\ a+1}$	Weeks worked between ages a and a + 1	37.37	33.25	48.52	42.10
DTRAIN (D)	Participated in formal training program between ages a and a + 1	.138	.167	.210	.172
MST_a (D)	Married at age a	.100	.133	.702	.625
RACE	Respondent is nonwhite	.300	.261	.222	.259
Dependent Variable:					
WDOT	Percentage change in wage between ages a and a + 1: $\ln(WAGE_{a+1}/WAGE_a)$	.098	.110	.071	.049

a. Variables followed by (D) are dichotomous. They assume the value 1 if the indicated requirement is met, 0 otherwise.
b. Omitted in estimation.

TABLE 7.2

Wage Change Regression, Ages 18 - 19[a]

Variable	Males			Females			Combined		
	ALL	JC	JS	ALL	JC	JS	ALL	JC	JS
	(1)	(2)	(3)	(4)	(5)	(6)	(7)	(8)	(9)
Market Differential									
PMD	-.112 (1.82)	.032 (.14)	-.193 (1.57)	-.176 (1.06)	-.209 (.79)	-.181 (.91)	-.127 (1.39)	-.069 (.40)	-.181 (1.74)
RMD	-.268 (2.62)	-.517 (2.54)	-.118 (1.01)	-.755 (5.78)	-.771 (3.83)	-.638 (3.87)	-.467 (5.84)	-.654 (4.67)	-.291 (3.06)
Turnover and Unemployment									
QUIT	-.003 (.11)	-.136 (2.19)	--	.045 (1.03)	-.017 (.34)	--	.007 (.29)	-.064 (1.67)	--
LAY	-.047 (1.00)	-.167 (2.19)	--	-.101 (.96)	-.160 (1.36)	--	-.048 (1.10)	-.111 (1.90)	--
OTHER	.111 (2.93)	--	--	.056 (1.70)	--	--	.069 (2.91)	--	--
WKUN	.003 (1.32)	0 (.03)	.004 (1.75)	-.001 (.33)	-.002 (.34)	-.002 (.46)	.002 (1.03)	0 (0)	.003 (1.42)
Market Opportunity									
1966	.042 (1.31)	-.018 (.25)	.068 (1.98)	--	--	--	.036 (1.19)	.018 (.28)	.057 (1.71)
1967	.062 (2.10)	.107 (1.60)	.042 (1.33)	--	--	--	.047 (1.66)	.105 (1.70)	.037 (1.21)
1969	-.059 (2.04)	-.096 (1.59)	-.037 (1.15)	-.135 (3.66)	-.178 (2.95)	-.062 (1.34)	-.095 (4.25)	-.145 (3.57)	-.044 (1.67)
1970	--	--	--	-.017 (.48)	-.028 (.45)	-.001 (.03)	0 (0)	-.019 (.36)	-.014 (.36)
Human Capital and Personal Characteristics									
EDUC	-.017 (2.28)	-.020 (1.53)	-.013 (1.45)	-.009 (.66)	-.019 (.89)	-.007 (.38)	-.016 (2.45)	-.018 (1.58)	-.014 (1.77)
CJT	.014 (1.38)	.022 (1.29)	.006 (.48)	.013 (.63)	.056 (1.58)	-.026 (1.02)	.016 (1.76)	.033 (2.16)	.001 (.07)
BEDUC	-.023 (.92)	-.002 (.04)	-.032 (1.11)	.031 (.94)	-.027 (.51)	.064 (1.58)	-.005 (.27)	-.018 (.51)	-.004 (.19)
DEX	.001 (1.76)	.002 (.91)	.001 (1.09)	.002 (2.53)	.004 (2.78)	.001 (1.11)	.002 (2.76)	.003 (2.70)	.001 (1.17)
BTRAIN	.046 (1.47)	.036 (.46)	.054 (1.40)	.010 (.25)	-.002 (.03)	-.002 (.04)	.036 (1.49)	.025 (.64)	.035 (1.12)
MST	-.095 (2.62)	-.112 (1.80)	-.087 (1.91)	-.024 (.53)	-.077 (1.14)	.033 (.56)	-.070 (2.49)	-.097 (2.15)	-.044 (1.25)
RACE	.031 (1.26)	.063 (.98)	.006 (.24)	.014 (.44)	.001 (0)	.037 (1.13)	.028 (1.48)	.047 (1.04)	.020 (1.03)
SEX	--	--	--	--	--	--	.016 (.69)	.074 (1.06)	0 (0)
CONST	.219	.355	.201	.118	.285	.097	.198	.241	.195
R^2	.055	.097	.035	.094	.129	.081	.060	.103	.034
SSE	.378	.434	.348	.410	.456	.351	.392	.444	.351
N	1344	430	914	843	436	407	2187	866	1321

a. The dependent variable is the natural logarithm of the ratio of the worker's (deflated) wage at age 18 to the (deflated) wage at age 19. The absolute value of asymptotic t-statistics appear in parentheses.
b. Alternative samples include ALL, all employed as wage and salary workers when 18 and when 19; JC, those who changed jobs between ages 18 and 19; and JS, those who remained at the same job.

TABLE 7.3

Wage Change Regression: Ages 20 - 21[a]

Variable	Males			Females			Combined		
	ALL[b]	JC	JS	ALL	JC	JS	ALL	JC	JS
	(10)	(11)	(12)	(13)	(14)	(15)	(16)	(17)	(18)
Market Differential									
PMD	-.381 (2.97)	-.917 (3.34)	-.205 (1.46)	-.083 (.53)	-.129 (.50)	-.074 (.41)	-.249 (2.53)	-.495 (2.63)	-.146 (1.33)
NMD	-.509 (4.30)	-.504 (2.33)	-.399 (2.80)	-.631 (4.62)	-.662 (2.99)	-.529 (3.25)	[illegible]	[illegible]	-.453 (4.24)
Turnover and Unemployment									
QUIT	.073 (2.05)	-.054 (.62)	--	.041 (1.04)	.016 (.34)	--	[illegible] (2.31)	.006 (.14)	--
LAY	-.012 (.23)	-.109 (1.08)	--	-.022 (.31)	-.032 (.37)	--	-.028 (.84)	-.082 (1.38)	--
OTHER	.044 (.98)	--	--	.019 (.66)	--	--	.042 (1.76)		--
VXIN	-.005 (2.35)	-.006 (1.61)	-.004 (1.21)	.002 (.94)	.004 (1.24)	0 (.12)	-.002 (1.23)	-.001 (.44)	-.002 (1.13)
Market Opportunity									
1966	.018 (.45)	-.139 (1.31)	.045 (1.12)	--	--	--	-.006 (.18)	-.097 (1.30)	.045 (1.25)
1967	.040 (1.17)	-.097 (1.25)	.074 (2.02)	--	--	--	.041 (1.31)	-.061 (.90)	.081 (2.48)
1969	-.055 (1.60)	-.173 (2.37)	-.016 (.42)	-.051 (1.68)	-.167 (2.92)	.031 (.91)	-.051 (2.29)	-.137 (3.16)	.002 (.09)
1970	--	--	--	-.058 (1.92)	[illegible]	-.016 (.48)	-.049 (1.71)	-.121 (2.31)	-.016 (.48)
Human Capital and Personal Characteristics									
EDUC	-.001 (.20)	-.012 (.96)	.002 (.25)	.011 (1.06)	.031 (1.77)	-.011 (.84)	.003 (.54)	.005 (.46)	0 (.03)
CJT	.013 (1.39)	.043 (2.14)	-.002 (.22)	-.023 (1.89)	-.045 (1.67)	-.027 (2.11)	-.001 (.17)	.010 (.62)	-.010 (1.26)
DEDUC	.085 (2.50)	.169 (2.26)	.051 (1.36)	.055 (1.52)	.052 (.88)	.062 (1.44)	.075 (3.06)	.101 (2.22)	.054 (1.93)
DEX	0 (.27)	0 (.05)	0 (.29)	.002 (2.04)	.002 (1.36)	.001 (1.47)	.001 (1.62)	.001 (1.08)	.001 (.93)
DTRAIN	.081 (2.38)	.126 (1.93)	.065 (1.65)	.038 (1.11)	.039 (.69)	.017 (.42)	.057 (2.36)	.063 (1.49)	.047 (1.64)
MST	-.045 (1.59)	-.071 (1.29)	-.028 (.85)	.030 (1.09)	.073 (1.60)	-.007 (.24)	-.007 (.36)	.013 (.38)	-.017 (.75)
RACE	.022 (.24)	.065 (1.15)	.002 (.05)	.011 (.38)	.041 (.85)	-.010 (.30)	.018 (.90)	.055 (1.52)	-.003 (.11)
SEX	--	--	--	--	--	--	.016 (.66)	-.004 (.08)	.024 (.90)
CONST	.052	.394	-.004	-.156	-.323	.114	-.044	.035	-.010
R^2	.107	.227	.055	.051	.077	.049	.074	.114	.050
SSE	.371	.421	.340	.353	.472	.289	.363	.420	.319
N	936	296	640	873	413	460	1809	709	1100

a. The dependent variable is the natural logarithm of the ratio of the worker's (deflated) wage at age 20 to the (deflated) wage at age 21. The absolute value of asymptotic t-statistics appear in parentheses.
b. Alternative samples include ALL, all employed as wage and salary workers when 20 and when 21; JC, those who changed jobs between ages 20 and 21; and JS, those who remained at the same job.

TABLE 7.4

Wage Change Regression: Ages 24 - 25

Variable	Males			Females			Combined		
	ALL[b]	JC	JS	ALL	JC	JS	ALL	JC	JS
	(19)	(20)	(21)	(22)	(23)	(24)	(25)	(26)	(27)
Market Differentials									
PMD	-.100	-.253	-.055	.049	-.235	.281	-.039	-.225	.035
	(1.00)	(.88)	(.58)	(.34)	(.84)	(1.78)	(.48)	(1.13)	(.43)
NMD	-.103	-.375	.044	-.339	-.472	-.189	-.190	-.456	-.040
	(1.32)	(1.95)	(.55)	(2.85)	(1.90)	(1.49)	(2.89)	(3.03)	(.59)
Turnover and Unemployment									
QUIT	.010	.255	--	-.045	-.141	--	-.019	-.030	--
	(.34)	(2.47)		(1.02)	(2.24)		(.78)	(.56)	
LAY	.079	.301	--	.169	.042	--	.096	.075	--
	(1.74)	(2.72)		(.184)	(.34)		(2.37)	(1.07)	
OTHER	-.085	--	--	.085	--	--	.016	--	--
	(2.23)			(2.39)			(.63)		
UNUM	-.002	.003	-.002	0	0	-.004	.001	.002	-.001
	(.87)	(.41)	(.68)	(.12)	(0)	(1.06)	(.31)	(.63)	(.63)
Market Opportunity									
1966	.083	.271	.069	--	--	--	.039	.005	.051
	(3.04)	(2.33)	(2.84)				(1.52)	(.06)	(2.20)
1967	.039	.107	.021	--	--	--	.017	.049	.005
	(1.55)	(1.52)	(.88)				(.68)	(.75)	(.21)
1969	.009	-.027	.020	-.090	-.178	-.053	-.031	-.086	-.014
	(.34)	(.35)	(.73)	(2.64)	(2.07)	(1.57)	(1.45)	(1.54)	(.66)
1970	--	--	--	-.041	-.071	-.036	-.011	-.037	-.014
				(1.26)	(.88)	(1.15)	(.38)	(.53)	(.49)
Human Capital and Personal Characteristics									
EDUC	0	.001	.001	0	-.006	.004	0	-.003	.001
	(.03)	(.08)	(.23)	(.06)	(.50)	(.64)	(.04)	(.35)	(.49)
CJT	.002	0	.004	-.009	-.036	-.004	-.003	-.012	0
	(.34)	(0)	(1.03)	(1.30)	(1.65)	(.61)	(.82)	(.94)	(.05)
DEDUC	-.003	-.221	.055	.147	.163	.131	.038	-.116	.064
	(.09)	(2.03)	(1.62)	(1.74)	(.93)	(1.50)	(1.14)	(1.27)	(2.65)
DEX	-.001	.002	-.002	.003	.003	.004	.002	.002	.001
	(.77)	(.62)	(1.76)	(3.41)	(1.36)	(3.67)	(2.26)	(1.29)	(1.74)
DTRAIN	.015	-.045	.036	.057	.111	.028	.025	.020	.031
	(.65)	(.67)	(1.66)	(1.81)	(1.54)	(.76)	(1.28)	(.40)	(1.64)
MST	.004	-.007	.007	.023	-.040	.057	.007	-.014	.018
	(.18)	(.12)	(.37)	(.82)	(.65)	(2.02)	(.44)	(.35)	(1.09)
RACE	.011	-.008	.019	-.020	-.066	.029	-.004	-.041	.023
	(.48)	(.18)	(.71)	(.60)	(1.29)	(.69)	(.22)	(1.19)	(.99)
SEX	--	--	--	--	--	--	.027	.044	.037
							(1.12)	(.93)	(1.34)
CONST	.076	-.343	.129	-.104	.193	-.222	-.051	-.020	-.061
R^2	.023	.109	.025	.088	.144	.066	.026	.076	.025
SSE	.282	.384	.235	.294	.375	.238	.288	.384	.238
N	970	240	730	822	182	340	1492	422	1070

a. The dependent variable is the natural logarithm of the ratio of the worker's (deflated) wage at age 24 to the (deflated) wage at age 25. The absolute value of asymptotic t-statistics appear in parentheses.
b. Alternative samples include ALL, all employed as wage and salary workers when 24 and when 25; JC, those who changed jobs between ages 24 and 25; and JS, those who remained at the same job.

TABLE 7.5

Determinants of Wage Growth 1966-1970:
Males Aged 18-24 in 1966[a]

Independent Variable	Mean	Coefficient (t-value)
Status in 1966:		
Market Differential ≥ 0	.08	-.270 (2.17)
Market Differential < 0	-.07	-.624 (5.87)
Years Education	11.19	.014 (2.54)
Age	21.36	-.022 (3.14)
Race (1 = black)	.28	.054 (1.99)
Marital Status (1 = married)	.52	-.014 (.52)
Intermediating Activities (1966-1970):		
Weeks Worked	179.94	-.0002 (.62)
Weeks Unemployed	4.85	-.003 (2.32)
Number of Unemployment Spells	.91	-.014 (1.89)
Completed Additional Education (Years)	.07	.002 (.06)
Completed Formal Training Program (1 = yes)	.46	.045 (1.86)
Served in Armed Forces (1 = yes)	.27	-.012 (.37)

a. The sample is all nonenrolled males who were employed as wage and salary workers in 1966 and 1970. The dependent variable is the natural logarithm of the 1970 actual wages (in 1966 prices) divided by the 1966 actual wage. The mean value of the dependent variable is .29. The sample is 1113; the R^2 is .092; and the constant in the regression is .623.

CHAPTER VIII

Conclusions and Policy Implications

The purpose of this study is to provide empirical evidence on the determinants and implications of various youth labor market activities. The study is motivated by a desire both to improve our understanding of how the youth labor market operates and to identify manpower problems that might be addressed by policymakers. This concluding chapter briefly summarizes our findings and examines their possible implications for youth labor market policy.

8.1 Summary of Findings

The central hypothesis tested throughout the study is that observed behavior in the youth labor market is guided by long run competitive forces. Our results provide mixed support for this hypothesis.

The study begins by documenting the flow of individuals into school or work. As expected, persons continuing their formal education beyond high school experience a less difficult transition into the labor force, with a lower incidence of unemployment. Among early entrants to the labor market, high school dropouts are likely to experience the highest unemployment rates.

In examining the wage determination process, we find that the influence of traditional human capital factors is strong and systematic. Education, training and work experience all increase the worker's expected wage. However, we also find that at any point in time, discrepancies exist between the typical worker's current and expected wage. We call this deviation the market differential.

The extent to which the market differential persists over time indicates the degree of competitiveness of the youth labor market and provides an implicit test of two alternative labor market theories. On the one hand, dual labor market theories argue that because of balkanization and segmentation of the market, workers currently in jobs significantly below their potential are trapped in those jobs. No advancement is possible at the current job and turnover would only result in unemployment or another dead-end low wage job. Alternatively, neoclassical theory predicts that market differentials stimulate forces that lead to their own liquidation. Workers earning less than their potential will demand higher wages, and will be more likely to quit their current jobs; those earning more than their potential will be denied wage increases, and will be more likely to be laid off. To the extent that unemployment constitutes job search, workers with positive market differentials may experience longer periods of unemployment which lead to above average increases in wages.

Our results are mixed. The impact of the market differential on turnover is not as systematic as anticipated; although workers receiving less than their capabilities warrant quit, positive market differentials do not increase the probability of being laid off. Moreover, the expected influence of turnover and unemployment on wage change was not found. On the other hand, estimates of the wage change model do imply dynamic equilibration in the youth labor market, with substantial erosion of negative differentials and a smaller reduction in positive differentials. We also find that the erosion of market differentials is greater when the worker changes jobs.

On the basis of these results, we conclude that market forces facilitate the worker's attainment of his human capital or potential wage, although we are unable to identify the precise channels by which this is achieved. The asymmetric impact of market differentials indicates a shift in the wage distribution from year to year, with a deterioration in the relative position of workers initially earning more than the competitive wage--although real wages do not actually decline.

The framework assembled to analyze equilibration in the labor market also permits concurrent analysis of several other interesting topics; of these, the effects of changing aggregate economic conditions and race and sex discrimination are the most interesting. Here our findings are straightforward: deteriorating aggregate labor market conditions severely disrupt the youth labor market, increasing unemployment and depressing wage growth; blacks have a greater incidence of unemployment and receive substantial wage discounts, with the discounts diminishing over the time period we examine; for both blacks and females, occupational and industrial status are largely responsible for their lower economic standing.

8.2 Policy Implications

Perhaps the most significant fact about the youth labor market from a policy viewpoint is the severe disruption brought about by declining aggregate economic conditions. The initial job is more difficult to procure, young workers are more likely to be pushed out of their jobs, the duration of unemployment is extended, and wage growth is depressed. Since the impact of a downturn falls disproportionately on youth, macroeconomic policies designed to increase the overall level of economic activity will be effective

in ameliorating many youth labor market problems. In periods of substantial overall unemployment, public employment programs (especially for minority and economically disadvantaged youth) may be useful in providing young people with essential work experience.

Dramatic differences are found in the labor market behavior of males and females. Even controlling for personal attributes and family background, males are more likely to continue their education past high school and enter the labor force later, with less difficulty. A large proportion of females are out of the labor force but not enrolled in school, even at the youngest ages, probably reflecting the importance of domestic responsibilities. Coming at such a critical period in the life cycle, this break in labor market experience surely affects their future labor market outcomes adversely. Because females are not as successful in acquiring actual work experience, their economic position drops even lower as the aging process continues. The major problem, however, is not discontinuous work experience: females just do not obtain high paying jobs consistent with their capabilities. The loss in wages resulting from discontinuous work experience is secondary to the component of male-female wage differences not explained by variations in human capital. In many respects, blacks share a similar experience: they have lower enrollment rates and higher unemployment rates than whites (although blacks are somewhat more likely to continue their education controlling for personal attributes and family background). Black wage rates are below those of equally qualified whites, but the differential had diminished somewhat by the early 1970's. These facts call for continued efforts to reduce market discrimination and broaden the range of work opportunities available to minorities.

Human capital investments (especially formal education, work experience, and training) have a substantial positive impact on the earnings of youth, increasing both the probability of employment and the wage rate. Various programs have been suggested to encourage this investment, including work-study programs and tuition subsidies for post-secondary training. The school to work transition of noncollege youth can perhaps be improved by access to programs of this nature.

In a static setting, many young workers are in jobs below their capabilities. They are not permanently trapped in these jobs. The path upward, however, is circuitous and usually involves a job and/or occupational change. Thus, much of the job changing activity of youth functions to improve the worker-job match. Improved information and counseling services could help accomplish this desirable matching of workers and jobs.

We would like to know much more about the youth labor market. The most serious deficiency of the study is our limited investigation of job turnover and unemployment. We restricted the sample to job changers; that is, persons employed in consecutive survey years. This group appears to enjoy a relatively smooth adjustment to the market, with a very low incidence of unemployment and wages moving quickly upward to liquidate noncompensating differentials. Greater difficulties are encountered by those who quit or are laid off but are not employed at the subsequent survey. Since we did not analyze their eventual adjustment to the labor market, it is difficult to draw conclusions about the efficiency of the market mechanism. Future work should include both job leavers and new labor market entrants in the analysis.

Another important gap in the study is our inability to measure attributes, especially training opportunities, associated with the current job. Variations in these training opportunities may well account for part of the wage growth observed between surveys.

Finally, it must be emphasized that the youth labor market we examine was that of the 1966 to 1971 period. Since that time, the demographic picture has begun to change drastically, with steady declines in the number of young people preparing to move into the labor market. In addition, social and legal pressure mitigating against racial and sexual discrimination has continued. These factors may well have resulted in substantial structural changes in the youth labor market in recent years.

References

Arvil Adams and Garth Mangum, The Lingering Crises of Youth Unemployment, Kalamazoo: W. E. Upjohn Institute for Employment Research (1977, typescript).

A. A. Alchian, "Information Costs, Pricing and Resource Unemployment," in Microeconomic Foundations of Employment and Inflation Theory, E. S. Phelps (ed.), Norton (1970): 27-52.

Paul Andrisani, "Am Empirical Analysis of the Dual Labor Market Theory," Columbus: Center for Human Resource Research (1973).

Paul Andrisani and Gilbert Nestel, "Internal-External Control and Labor Market Experience," in Pre-Retirement Years Volume IV (1974).

Joseph R. Antos and Sherwin Rosen, "Discrimination in the Market for Public School Teachers," Journal of Econometrics (1975): 123-150.

Yonathan Bard, "Nonlinear Parameter Estimation and Programming," IBM (December 1967)

John Barron and Wesley Mellow, "Job Search Intensity: Theory and Evidence," BLS Working Paper (1978).

Ann P. Bartel and George J. Borjas, "Middle-Age Job Mobility: Its Determinants and Consequences," NBER Working Paper (January 1977).

Gary Becker, Human Capital, New York: Columbia University Press (1975).

Virginia A. Bergquist, "Woman's Participation in Labor Organizations," Monthly Labor Review (October 1974): 3-9.

Alan Blinder, "Wage Discrimination: Reduced Form and Structural Estimates," Journal of Human Resources (Fall 1973): 436-455.

Barry A. Bluestone, "The Personal Earnings Distribution: Individual and Institutional Determinants," unpublished Ph. D. Dissertation, University of Michigan (1974).

Charles Brown, "Equalizing Differences in the Labor Market," BLS Working Paper (1977)

John F. Burton, Jr. and John Parker, "Inter-industry Variations in Voluntary Labor Mobility," Industrial and Labor Relations Review (January 1969): 199-216.

Glen Cain, "The Challenges of Segmented Labor Market Theories to Orthodox Theory: A Survey," Journal of Economic Literature (December 1976): 1215-1257.

Center for Human Resource Research, The National Longitudinal Surveys Handbook, Columbus: Ohio State University (1973).

Martin David, "The Dynamics of Family Labor Supply Decisions: Quitting and Relocating as Family Unit Decisions," in James N. Morgan, ed., Five Thousand American Families - Patterns of Economic Progress, Vol. II, Ann Arbor: Survey Research Center (1974).

Peter B. Doeringer and Michael J. Piore, Internal Labor Markets and Manpower Analysis, Lexington, Mass.: Health (1971).

T. Domencich and D. McFadden, Urban Travel Demand: A Behavioral Analysis, Armsterdam: North Holland (1975).

Greg Duncan and Frank Stafford, "Pace of Work, Unions and Earnings in Blue Collar Jobs," University of Michigan, unpublished (March 1977).

Otis Dudley Duncan, David L. Featherman, and Beverly Duncan, Socioeconomic Background and Achievement, New York: Seminar Press (1972).

R. G. Ehrenberg and R. L. Oaxaca, "Unemployment Insurance, Duration of Unemployment and Subsequent Wage Gain," American Economic Review (December 1976): 754-66.

Alan A. Fisher, "The Problem of Teenage Unemployment," unpublished Ph. D. Dissertation, University of California, Berkeley (1973).

Robert J. Flanagan, "Labor Force Experience, Job Turnover and Racial Wage Differentials," Review of Economics and Statistics (November 1974): 521-29.

Robert J. Flanagan, "Discrimination Theory, Labor Turnover and Racial Unemployment Differentials," University of Chicago, mimeo (1975).

Hugh Folk, "The Problem of Youth Unemployment," in The Transition From School to Work, Industrial Relations Section, Research Report 111, Princeton: Princeton University Press (1968): 76-107.

Richard B. Freeman, "Changes in the Labor Market for Black Americans," Brookings Papers on Economic Activity (1973): 67-132.

Richard Freeman, "Teenage Unemployment: Can Reallocating Educational Resources Help?" in The Teenage Unemployment Problem: What are the Options, Congressional Budget Office Report (October 1976): 41-47.

R. J. Gordon, "The Welfare Costs of Higher Unemployment," Brookings Papers on Economic Activity (1973): 133-95.

John Grasso, "Dimensions of Youth Unemployment," Chapter 5 in Career Thresholds Volume VI (1977).

Zvi Griliches, "Estimating the Returns to Schooling: Some Econometric Problems," Econometrica (January 1977): 1-22.

Zvi Griliches, "Wages of Very Young Men," Journal of Political Economy (August 1976, Part 2): 569-86.

Zvi Griliches and William M. Mason, "Education, Income and Ability," Journal of Political Economy (May/June 1972): S74-S103.

Robert Hall, "Turnover in the Labor Force," Brookings Papers on Economic Activity (1972): 709-56.

Giora Hanoch, "An Economic Analysis of Earnings and Schooling," Journal of Human Resources (Summer 1967): 310-29.

Robert M. Hauser, "Disaggregating a Social-Psychological Model of Educational Attainment," in Structural Equation Models in the Social Sciences, A.S. Goldberger and O.D. Duncan (eds.), New York: Seminar Press (1973): 255-284.

James Heckman, "Shadow Prices, Market Wages and Labor Supply," Econometrica (July 1974): 679-694.

James Heckman and Robert Willis, "A Beta-Logistic Model for the Analysis of Sequential Labor Force Participation by Married Women," Journal of Political Economy (February 1977): 27-58.

Janice N. Hedges, "Youth Unemployment in 1974-75 Recession," Monthly Labor Review (January 1976): 49-56.

Christopher Jencks, et al., Inequality: A Reassessment of the Effect of Family and Schooling in America, New York: Basic Books (1972).

Hilda Kahne with Andrew I. Kohen, "Economic Perspectives on the Roles of Women in the American Economy," Journal of Economic Literature (December 1975): 1249-1292.

Edward Kalachek, The Youth Labor Market, Ann Arbor: Institute of Labor and Industrial Relations, University of Michigan and Wayne State University (1969).

Edward Kalachek and Frederic Raines, "The Structure of Wage Differences Among Mature Male Workers," Journal of Human Resources (Fall 1976): 484-506.

Andrew I. Kohen, "Women and the Economy: A Bibliography and a Review of the Literature on Sex Differentiation in the Labor Market," Columbus: Center for Human Resource Research (1975).

Andrew I. Kohen and Paul Andrisani, "Labor Market Experience of High School Graduates and Dropouts," Chapter 2 in Career Thresholds Volume IV (1973).

Andrew I. Kohen and Roger D. Roderick, "The Effects of Race and Sex Discrimination on Early-Career Earnings," Columbus: Center for Human Resource Research (1975)

Andrew I. Kohen and Patricia Shields, "Determinants and Consequences of Service in the Armed Forces During the Vietnam Era," Chapter 6 in Career Thresholds Volume VI (1977).

Edward Lazear, "Age, Experience and Wage Growth," American Economic Review (September 1976): 548-58.

Edward Lazear, "Family Background and Optimal Schooling Decisions," NBER Working Paper (July 1976).

Edward Lazear, "Schooling as a Wage Depressant," Journal of Human Resources (Spring 1977): 164-76.

Duane E. Leigh, "An Analysis of the Determinants of Occupational Upgrading," Institute for Research on Poverty, University of Wisconsin - Madison (September 1975).

Robert I. Lerman, "Some Determinants of Youth School Activity," Journal of Human Resources (Summer 1972): 366-383.

Lee Lillard, "Inequality: Earnings vs Human Wealth," American Economic Review (March 1977).

S. A. Lippman and J. J. McCall, "The Economics of Job Search: A Survey," Economic Inquiry (June 1976): 313-68.

G. S. Maddala and Lung-Fei Lee, "Recursive Models with Qualitative Endogenous Variables," Annals of Economic and Social Measurement (Fall 1976): 525-546.

Charles D. Mallar, "Estimating a Simultaneous Probability Model: The School and Labor Force Decisions of Youths," Proceedings of the Business and Economic Statistics Section, American Statistical Association (1976): 448-450.

Ray Marshall, "The Economics of Racial Discrimination: A Survey," Journal of Economic Literature (September 1974): 849-871.

Stanley H. Masters, "The Effect of Family Income on Children's Education: Some Findings on Inequality of Opportunity," Journal of Human Resources (Spring 1969) 158-175.

J. P. Mattila, "Job Quitting and Frictional Unemployment," American Economic Review (March 1974): 235-39.

J. J. McCall, "Economics of Information and Job Search," Quarterly Journal of Economics (February 1970): 113-26.

mond R. McKay, Wage Differentials by Sex Among Employed Youths, unpublished Ph. D. dissertation, Ohio State University (1975)

Wesley Mellow, "Market Differentials and Labor Force Behavior," unpublished Ph. D. dissertation, Washington University (1975).

Wesley Mellow, "A Multinomial Logit Model of Labor Turnover," BLS Working Paper (1977).

Wesley Mellow, "Search Costs and the Duration of Unemployment," Economic Inquiry (forthcoming 1978) (a).

Wesley Mellow, "Equilibration in the Labor Market," Southern Economic Journal (forthcoming, July 1978) (b).

Jacob Mincer, Schooling, Experience and Earnings, New York: Columbia (1974).

Jacob Mincer, "On the Job Training: Costs, Returns, and Some Implications," Journal of Political Economy (October 1962, Supplement): 50-79.

Jacob Mincer and Solomon Polachek, "Family Investments in Human Capital: Earnings of Women," Journal of Political Economy (March/April 1974, Supplement): S76-S108.

Forrest D. Nelson, "On a General Computer Algorithm for the Analysis of Models with Limited Dependent Variables, Annals of Economic and Social Measurement (Fall 1976): 493-510.

Marc Nerlove and S. J. Press, "Univariate and Multivariate Log-Linear and Logistic Models," Santa Monica: The Rand Corporation (1973), R-1306-EDA/NIH.

Ronald Oaxaca, "Male-Female Wage Differentials in Urban Labor Markets," International Economic Review (October 1973): 693-709.

Michael D. Ornstein, Entry into the American Labor Force, New York: Academic Press (1976).

Herbert S. Parnes and Andrew I. Kohen, "Labor Market Experience of Noncollege Youth: A Longitudinal Analysis," in From School to Work: Improving the Transition, Washington: National Commission for Manpower Policy (1976): 57-88.

Herbert S. Parnes and Andrew I. Kohen, "Occupational Information and Labor Market Status: The Case of Young Men," Journal of Human Resources (Winter 1975): 45-55.

Donald Parsons, "The Cost of School Time, Forgone Earnings and Human Capital Formation," Journal of Political Economy (March 1974): 251-66.

Donald O. Parsons, "Intergenerational Wealth Transfers and the Educational Decisions of Male Youth," Quarterly Journal of Economics (1974): 603-617.

Donald O. Parsons, "Specific Human Capital: An Application to Quit Rates and Layoff Rates," Journal of Political Economy (December 1972): 1120-1143.

Donald O. Parsons, "Models of Labor Market Turnover: A Theoretical and Empirical Survey," in Research in Labor Economics, Ronald G. Ehrenberg (ed.), Greenwich, Connecticut: JAI Press (1977).

John H. Pencavel, An Analysis of the Quit Rate in American Manufacturing Industry, Princeton (1970).

George L. Perry, "Unemployment Flows in the U.S. Labor Market," Brookings Papers on Economic Activity (1972): 245-78.

James F. Ragan, Jr., "Minimum Wages and the Youth Labor Market," Review of Economics and Statistics (May 1977): 129-136.

Sherwin Rosen, "Human Capital: A Survey of Empirical Research," in Research in Labor Economics, Ronald G. Ehrenberg (ed.), Greenwich, Connecticut: JAI Press (1977).

Sherwin Rosen, "Learning and Experience in the Labor Market," Journal of Human Resources (Summer 1972): 326-342.

Peter Schmidt and Robert Strauss, "The Effect of Unions on Earnings and Earnings on Unions: A Mixed Logit Approach," International Economic Review (February 1976).

James P. Smith and Finis R. Welch, "Black-White Earnings and Employment: 1960-1970," Technical Analysis Paper No. 33, ASPER (June 1975).

Michael Spence, "Job Market Signalling," Quarterly Journal of Economics (August 1973).

Stanley P. Stephenson, Jr., "The Economics of Youth Job Search Behavior," Review of Economics and Statistics (February 1976): 104-11.

Stanley P. Stephenson, Jr., "The Transition from School to Work of Young Men," presented at the American Economic Association Meeting, December 1977.

Wayne Stevenson, "The Relationship Between Early Work Experience and Future Employability," Chapter 6 in Adams and Mangum (1977).

Vladimir Stoikov and Robert L. Raimon, "Determinants of the Differences in Quit Rates Among Industries," American Economic Review (December 1968): 283-98.

Paul Taubman, Sources of Inequality in Earnings, Amsterdam: North Holland (1975).

Richard Thaler and Sherwin Rosen, "The Value of Saving a Life: Evidence from the Labor Market," in Household Production and Consumption, Nestor Terleckyj (ed.) New York: NBER (1975): 265-297.

U. S. Department of Labor, Handbook of Labor Statistics 1976, Bulletin 1905, U. S. Government Printing Office (1976).

U. S. Department of Labor, BLS Handbook of Methods, Bulletin 1910, U. S. Government Printing Office (1976).

U. S. Department of Labor, Career Thresholds, Manpower Research Monograph No. 16, Vols. 1-5, U. S. Government Printing Office (1970-1975).

U. S. Department of Labor, Years for Decision, Manpower Research Monograph No. 24, Vols. 1-3, U. S. Government Printing Office (1970-1975).

Howard Wachtel and Charles Betsey, "Employment at Low Wages," Review of Economics and Statistics (May 1972): 121-28.

Michael L. Wachter, "Primary and Secondary Labor Markets: A Critique of the Dual Approach," Brookings Papers on Economic Activity (1974): 637-693.

Leonard Weiss, "Concentration and Labor Earnings," American Economic Review (March 1966): 96-117.

Leonard Weiss and Jeffrey G. Williamson, "Black Education, Earnings and Interregional Migration: Even Newer Evidence," American Economic Review (March 1975): 241-244.

Randall D. Weiss, "The Effect of Education on the Earnings of Blacks and Whites," Review of Economics and Statistics (May 1970): 150-159.

Finis Welch, "Black-White Returns to Schooling," American Egonomic Review (March 1973): 893-907.