DOCUMENT RESUME

ED 134 698 95 CE 009 178

AUTHOR Woodward, Robert L.; Myers, Norman L.
TITLE Industrial Arts Power Mechanics. Applying Scientific Principles to Power, Energy, Force. Instructional Units.
INSTITUTION California State Dept. of Education, Sacramento.
PUB DATE 70
NOTE 145p.; Project conducted under National Defense Education Act of 1958, Public Law 864 of the 85th Congress

EDRS PRICE MF-$0.83 HC-$7.35 Plus Postage.
DESCRIPTORS Curriculum Guides; *Industrial Arts; Industrial Technology; Instructional Materials; *Power Mechanics; Science-Instruction; Secondary Education; Trade and Industrial Education; *Units of Study (Subject Fields)

ABSTRACT

The instructional units and related materials in this guide are designed to assist in the preparation of courses of study/instruction in (1) power mechanics specifically, (2) power mechanics which serve as introductory courses in other areas of industrial arts, and (3) automotive mechanics which also cover the broader aspects of power mechanics. Each unit presents a broad coverage of the topic indicated by its title, covers the scientific principle involved, suggests methods of applications of the technical and scientific information, and lists selected references to further technical and scientific information. These references are keyed by numbers in parentheses to the complete list of selected references at the end. There are 40 units presented under seven section headings: (1) Natural Power (muscle power, waterwheels, windmills, heat collectors, and solar stills); (2) Mechanical Power (simple and compound machines, lubrication, springs, clutches, and dynamometers), (3) Steam Power (steam engines and turbines), (4) Thermal Power (high-energy rate forming, powder-actuated tools, jet and rocket engines, gasoline testing, carburetion, two- and four-cycle engines, wankel engines, thermostats, and welding processes), (5) Electrical Power (dry cells: primary cells, storage batteries: secondary cells, generation of electricity, transmission of electric power, transformers, spark plugs, ignition systems, electric motors, fuel cells, photoelectric cells, and semiconductor power rectifiers), (6) Hydraulic Power (jacks and presses, machine tools, braking systems, fuel pumps, power steering, and air conditioners), and (7) Pneumatic Power (air-powered tools, spray guns, and vacuum pumps). Appendix A presents a relatively brief course outline for industrial arts power mechanics, and appendix B a comprehensive course outline for industrial arts automotive mechanics. Appendix C contains terminology on the storage battery. Appendix D is assignment sheets. (JT)

Instructional Units

Industrial Arts
POWER MECHANICS
Applying Scientific Principles to POWER • ENERGY • FORCE

Robert L. Woodward and Norman L. Myers
Consultants in Industrial Arts Education
Project Coordinators

Project Conducted Under National Defense Education Act of 1958, Public Law 864 of the 85th Congress

Partially funded under provisions of the National Defense Education Act, Title III, this publication was edited and prepared for photo-offset production by the Bureau of Publications, California State Department of Education, and published by the Department, 721 Capitol Mall, Sacramento, California 95814.

Printed by the Office of State Printing
1970

FOREWORD

Courses in industrial arts power mechanics are designed to provide opportunities for students to make applied use of technical information and scientific principles pertaining to power, energy, and force. Students are thus given the types of experiences that will make their knowledge of technical and scientific information meaningful and useful to them and that will cause them to acquire and use proficiently the skills involved in industrial arts power mechanics. These achievements will in turn intensify the students' interest in industrial arts, science, and technology.

Two studies conducted by the California State Department of Education were concerned with the scientific content in automotive/power mechanics courses offered by California high schools. These studies produced information that was used to develop instructional material for the industrial arts area of power mechanics. This information was used by members of the NDEA Industrial Arts-Science Curriculum Committee and the NDEA Industrial Arts-Science Editorial Committee during workshops conducted under the provisions of the National Defense Education Act in the preparation of the material for an experimental edition of *Industrial Arts Power Mechanics*.

A copy of the experimental edition of *Industrial Arts Power Mechanics* and a questionnaire were sent to each automotive/power mechanics teacher in the high schools of California and to selected industrial arts leaders in other states. The educators were asked to review the publication and complete and return the questionnaires. Suggested changes listed in the returned questionnaires were used in revising the material presented in the experimental edition.

The instructional units in this publication provide a sound basis for the preparation of courses of study/instruction in (1) power mechanics per se; (2) power mechanics which serve as introductory courses to industrial arts automotive mechanics, electronics, and metals in grades nine through twelve; and (3) automotive mechanics which make use of the elements of power mechanics.

I am certain that the information presented in *Industrial Arts Power Mechanics* will be of great value in the development of power mechanics courses with the breadth and depth of content that is needed and in which sound, efficient, and effective instructional procedures are emphasized.

Max Rafferty

Superintendent of Public Instruction

NDEA COMMITTEES

NDEA Industrial Arts-Science Curriculum Committee

The specialists in automotive/power mechanics from the ten California colleges with accredited industrial arts teacher-education programs and the teachers, supervisors, and teacher educators who prepared the instructional units for *Industrial Arts Power Mechanics* during a work session held at Fresno State College, December 19-23, 1966, are as follows:

Leslie L. Aldrich, Fresno State College; John C. Davis (retired), Fresno City Unified School District; Raymond E. Fausel, California State College at Los Angeles; Frank J. Irgang, San Diego State College; Richard E. Johnston, Washington High School, Fremont (formerly at Chico State College); Frank H. Jolly, Humboldt State College, Arcata; Mark Jones, Tustin Union High School District; Angus J. MacDonald, San Jose State College; Ted A. McCoy, Hanford High School; Burton A. Pontynen, Pacific Union College, Angwin; Ernest J. Rawson, California State College at Long Beach; James E. Rice, California State Polytechnic College, San Luis Obispo; Frank E. Schroeter, Fresno State College; and Gerald Valente, formerly at San Francisco State College.

NDEA Industrial Arts-Science Editorial Committee

The members of the teams of specialists in science and specialists in industrial arts who, at work sessions in Los Angeles, Sacramento, and San Diego, on December 18-22, 1967, edited and augmented the material for *Industrial Arts, Power Mechanics* prepared by the NDEA Industrial Arts-Science Curriculum Committee, are as follows:

O. Bruce Akers, Burbank Unified School District; Ralph C. Bohn, San Jose State College; Joseph E. Freeland, Sacramento City Unified School District; Serafino L. Giuliani, San Diego City Unified School District; Harold L. Marsters, San Diego State College; Richard L. Miller (retired), Los Angeles Unified School District; Jack E. Reynolds, Sacramento City Unified School District; William B. Steinberg, San Diego City Unified School District; and David O. Taxis, Office of the Los Angeles County Superintendent of Schools.

PREFACE

Industrial Arts Power Mechanics presents a set of instructional units derived from the results of two studies, a series of work sessions, and an evaluation of an experimental edition.

Members of the Central California Automotive Technical Committee, who prepared the material for the experimental edition of *Industrial Arts, Automotive Mechanics* which was published by the California State Department of Education in 1964, requested the Department to conduct a study to determine the extent to which scientific principles are being applied in present industrial arts automotive/power mechanics courses and the ways in which these principles can be applied to a greater extent in all courses in this area of industrial arts. The Department responded by conducting two studies, one in 1964 and the other in 1965.

The first study was conducted by having teachers of automotive/power mechanics in the high schools of California complete a questionnaire that was designed to secure their reactions to the way in which scientific principles were employed in *Industrial Arts Automotive Mechanics.* All the automotive/power mechanics teachers who responded favored the covering of applicable scientific principles in the automotive publication. The second study was conducted by having teachers of automotive/power mechanics in the high schools of California complete a questionnaire that was designed to report if the teachers applied a given set of scientific principles in their courses and, if so, how. In both studies the teachers indicated a need for curriculum material that would set forth ways of applying scientific principles and provide instructional units covering the broader area of power mechanics.

A series of work sessions for the development of instructional material in industrial arts power mechanics which would apply scientific principles relating to power, energy, and force was financed by funds provided under provisions of Title III of the National Defense Education Act.

The first work session was held at Fresno State College on December 19-23, 1966. Specialists in automotive/power mechanics from the ten colleges in California with accredited industrial arts teacher-education programs were assisted by supervisors and representatives of the Central California Automotive Technical Committee in preparing instructional units in power mechanics. These participants, listed as members of the NDEA Industrial Arts-Science Curriculum Committee in this publication, used the data obtained from the two studies, information presented in the California State Department of Education publications *Industrial Arts and Science* and *Mathematics and Industrial Arts Education,* and science textbooks used in the school systems located near the ten colleges represented at the work session to develop the instructional material.

Additional work sessions were held in Los Angeles, Sacramento, and San Diego on December 18-22, 1967, to augment and edit the power mechanics material developed at the Fresno State College work session. Each work-session team was composed of a specialist in science, a specialist in automotive/power mechanics, and a specialist in industrial arts. The participants in these work sessions are listed as members of the NDEA Industrial Arts-Science Editorial Committee in this publication.

Copies of the experimental edition of *Industrial Arts Power Mechanics* and questionnaires for evaluating the publication were distributed in September, 1968, to automotive/power

mechanics teachers and industrial arts supervisors and teacher educators in California and to selected industrial arts teachers and supervisors in other states. Those who evaluated the experimental edition and responded to the questionnaire became members of the National Power Mechanics Review Committee. Changes suggested by them were taken into consideration in revising the material.

The NDEA project was coordinated by Robert L. Woodward and Norman L. Myers, Consultants in Industrial Arts Education, California State Department of Education.

The education profession in California, and particularly those members working in the area of industrial arts automotive/power mechanics, are greatly indebted to all the teachers, supervisors, and teacher educators who participated in the work sessions and studies which resulted in *Industrial Arts Power Mechanics*.

Industrial Arts Power Mechanics should be of invaluable assistance in the preparation of detailed courses of study/instruction in power mechanics, in the revision of present courses of study/instruction in automotive mechanics, and in the improvement of instruction in California junior high schools and high schools.

J. WILLIAM MAY
Acting Chief,
Division of Instruction

MITCHELL L. VOYDAT
Chief, Bureau of Elementary
and Secondary Education

CONTENTS

8

CALIFORNIA'S INDUSTRIAL ARTS PROGRAM

The industrial arts program in California schools is an integral part of the total program of education and is designed specifically to help prepare students to meet the requirements of an industrial-technological culture. In this program, which involves study, experimentation, and application, students learn through participation in activities in which they use industrial-technical tools, machines, materials, and processes, as well as English, mathematics, science, and social sciences, in solving meaningful problems.

The four major purposes of industrial arts are to provide opportunity for each student to develop (1) insight and understanding of industry and its place in our society; (2) talent in industrial-technical fields; (3) problem-solving ability related to the materials, processes, and products of industry; and (4) skill in the proficient and safe use of tools and machines. These purposes are furthered by a program in which emphasis is placed on helping students acquire the knowledge and skills basic to many careers.

In kindergarten and grades one through six, the industrial arts program furthers the established educational objectives and enriches the experiences pupils have in attaining such objectives. The industrial arts activities employed for this purpose emphasize planning and construction that is required in meeting needs that arise as the pupils participate in experiences relating to English, mathematics, science, and social sciences. The regular classroom teacher has responsibility for conducting the elementary school industrial arts program.

In grades seven and eight of elementary schools and grades seven, eight, and nine of junior high schools, the industrial arts program is an integral and often required part of the total program of education for all youth. Students are usually guided through a series of introductory experiences in a variety of industrial arts areas. Included in the program are courses which provide instruction in the broad areas of drafting, electricity/electronics, graphic arts, industrial crafts, metals, power mechanics, and woods. In a large school each of these areas of instruction is often taught in a different shop/laboratory; in a small school, several are taught in one shop/laboratory. In each instance the courses are taught by teachers with special preparation in the field of industrial arts and in specially designed and equipped facilities. In these grades emphasis and attention are given to helping students discover and further their aptitudes, abilities, and interests. Provision is made for students to acquire a variety of skills and to profit from participation in creative activities.

In grades nine through twelve and ten through twelve, the industrial arts program provides opportunity for the high school student, regardless of his major, to choose the industrial arts courses he believes will be of the greatest value to him in attaining the goal he is seeking. Included in the program are elective courses which provide instruction in the broad areas of automotive mechanics, drafting, electronics, graphic arts, industrial crafts, metals, photography, plastics, power mechanics, and woods. These courses are taught by teachers with special preparation in the field of industrial arts and in specially designed and equipped facilities. The advanced techniques developed in these courses approach the procedures used in industry. At this level emphasis is given to practices and requirements of occupations and professions relating to each industrial arts area. Challenging opportunities are provided for scientifically and mathematically oriented students to work and experiment with new materials, processes, ideas, and designs.

Knowledge and skills acquired and the experience gained in the industrial arts program assist individuals to select careers wisely and to participate successfully in programs of education and training offered by institutions of higher learning, industry, and government which provide further preparation needed for the chosen careers.

INTRODUCTION

Industrial Arts Power Mechanics is designed to apply scientific principles relating to power, energy, and force. The words *power, energy,* and *force* often have different meanings when used in everyday language than when used in a scientific sense. In a scientific sense these words are defined as follows:

- *Power* is the time rate of doing work.
- *Energy* is the capacity to do work.
- *Force* is a push or a pull.

Industrial arts power mechanics is the study of the generation and conversion of energy to power and the transmission, control, and use of this power. Power mechanics includes the study of (1) the development of power for industrial and home use; (2) the control and measurement of power; (3) the transmission of power through mechanical, fluid, and electrical means; and (4) the use of power to accomplish work.

Each unit in *Industrial Arts Power Mechanics* presents a broad coverage of the topic indicated by its title, covers the scientific principle involved, suggests methods of application of the technical and scientific information, and lists selected references to further technical and scientific information. These references are keyed by numbers in parentheses to the complete list of selected references immediately preceding the appendices. The page numbers listed after each keyed number give further direction for locating pertinent information.

Appendix A of this publication presents a relatively brief course outline for industrial arts power mechanics; Appendix B presents a comprehensive course outline for industrial arts automotive mechanics. The outline on power mechanics is keyed to the instructional units contained in the text and to certain sections of the automotive mechanics outline. Appendix C contains terminology on the storage battery, and Appendix D contains assignment sheets.

One of the purposes of *Industrial Arts Power Mechanics* is to assist in the preparation of courses of study/instruction in (1) power mechanics specifically; (2) power mechanics which serve as introductory courses in other areas of industrial arts; and (3) automotive mechanics which also cover the broader aspects of power mechanics. Another purpose is to demonstrate the interrelationships of the instructional content of industrial arts power mechanics with that of science.

Courses in power mechanics provide an instructional program that is much broader in content than the conventional automotive mechanics courses. In fact, power mechanics employs a selective coverage of many sources of energy and their application.

Knowledge and skills relating to power mechanics may be used in grades seven and eight to augment courses in other areas of industrial arts; however, it is recommended that courses in power mechanics not be provided below grade nine. Introductory courses in power mechanics may be offered in grade nine of junior high schools or four-year high schools. It is recommended that courses in power mechanics be provided at the high school level. Power mechanics may be offered at the high school level as an introduction to courses in the industrial arts areas of automotive mechanics, electronics, and metals.

Today's industrial technology requires knowledge and skills that are not adequately covered in conventional automotive mechanics courses. It is recommended that these conventional courses be more selective in content relating to automotive mechanics and include the broader aspects of power mechanics.

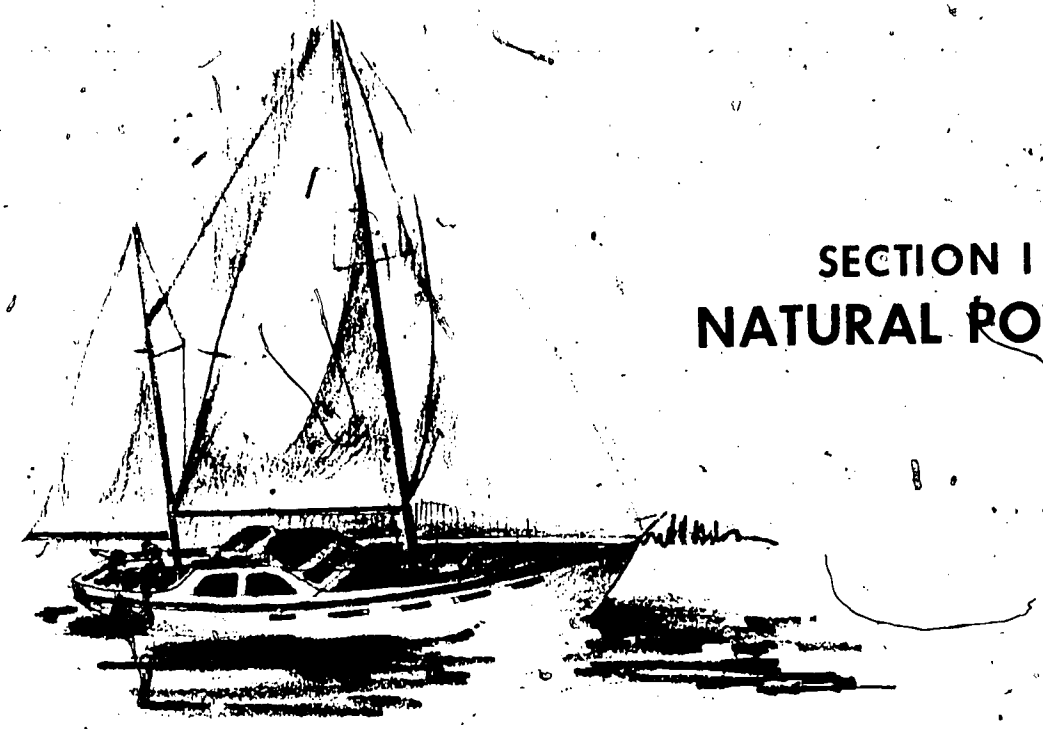

SECTION I
NATURAL POWER

Unit 1 — MUSCLE POWER

The only power available to primitive man was his own muscle. This muscle power made it possible for him to travel, seek food, make simple tools, and fight his enemies. The lever was used by man during this early period. However, relatively great sources of power were available only when the muscles of many men were brought to bear upon a single object. Later, other simple machines were used by man to multiply his muscle power. These were the wheel and pulley, the inclined plane, the wedge, and the screw. (Refer to Unit 6, "Simple and Compound Machines.")

When man learned to domesticate and harness animals, another source of muscle power became available. However, human and animal muscles applied to simple machines limited man's power output. This limitation made it necessary for him to seek other sources of energy. Among the sources of energy to be employed were water and wind, which were used to turn waterwheels and windmills. Today, many sources of energy are used by man. Even though modern man has countless labor-saving devices and makes use of many sources of power, he still depends on muscle power for a great number of daily activities.

It should be understood that simple machines are devices to increase man's strength (muscle). However, such machines cannot increase man's ability to do work, which is defined as the product of the force and the distance through which it moves. Machines merely allow the trade of distance for "quick" force. For example, the wrench used to loosen a nut is a form of lever. If the nut is stuck tightly, it may be necessary to use a longer wrench to increase the leverage. Actually, the work accomplished is not reduced, because the wrench handle is moved a longer distance than the nut moves. The same amount of work has been done, but in a different, more gradual manner. Either speed can be sacrificed to gain force, or force can be sacrificed to gain speed. Because force is required to move the parts of a machine and to overcome friction in the machine, the actual mechanical advantage is never as great as the theoretical mechanical advantage. Thus the efficiency of a machine is always less than 100 percent.

Scientific Principles Involved: Work, Power, Energy, Force

In everyday language the term *work* is used to describe any activity in which muscular or mental effort is exerted. In a scientific sense, however, *work* has a very special meaning: *Work is done*

when a force acts on matter and changes its motion or when force moves an object against an opposing force. No matter how long a 50-pound load is held on a person's shoulder, work is not being done in a scientific sense; the upward force that is exerted is merely counteracting the downward force of the load. Work is done in a scientific sense when the load is raised to the shoulder, when it is carried up a flight of stairs, or when it is dragged across the floor. In these cases a force is exerted which moves the object. Expressed in an equation, *work (in foot-pounds) = force (in pounds) X distance (in feet).*

Like the term *work*, the term *power* has a scientific meaning that differs from its everyday meanings. When it is said that a person has great power, it usually means that the person has great strength or wields great authority. In a scientific sense, however, *power is the time rate of doing work.* A man does the same amount of work whether he climbs a flight of stairs in one minute or in one hour, but he does not use the same amount of power.

Matter acquires energy when work is done against gravity in raising matter to an elevated position or when work is done to set matter in motion. The energy thus acquired can be used to do work. In mechanics there are two kinds of energy, kinetic energy and potential energy. *Kinetic energy is energy due to motion of a mass.* A moving automobile, a bullet leaving the muzzle of a gun, a spinning flywheel, a rolling ball, and falling or running water all possess kinetic energy. *Potential energy is stored energy.* The water impounded behind a dam has potential energy. This energy becomes kinetic when it is used to turn a waterwheel or turbine. The coiled mainspring of a watch has potential energy because work was done in winding it. Its potential energy becomes kinetic as the spring unwinds.

Force is directly related to work and energy. *Force is a push or a pull.* However, forces do not always push or pull an object. Some combinations of forces just balance each other; as a result, the body on which they act remains stationary. Therefore, force is more completely defined as that which produces or prevents motion or has a tendency to do so.

Application of Principles

1. A bicycle dynamometer can be made to illustrate the use of muscle power to produce electric power. The bicycle is held upright by a front-wheel block and balancing supports on each side of the rear-wheel axle. Two rollers (approximately four inches in diameter) are placed under the rear wheel of the bicycle. The front roller is the idler, and the rear roller is the driver. A pulley wheel is attached to the driver roller. A belt from this pulley wheel is placed around the pulley wheel of an automobile alternator with a variable field control. (The pulley selected should permit about 1,000 revolutions per minute.) All supports of parts should be attached to a plywood base/floor. The generated current is fed to a 12-volt storage battery for stabilizing voltage. A bank of lights or other electrical load can be employed to use up the electricity produced by the alternator. Meter readings can be made and horsepower computed.
2. Simple machines among the tools and machines in a facility can be identified and demonstrated by students. (Refer to Unit 6, "Simple and Compound Machines.")

Selected References

Note: The numbers in parentheses in this section refer to entries in the list of selected references that appear within this publication immediately after the text.

(9), pp. 80, 486-87; *(13)*, pp. 58-64; *(16)*, p. 148; *(22)*, p. 49; *(24)*, pp. 452-55; *(26)*, pp. 1-16; *(27)*, pp. 42-49, 120-42; *(36)*, pp. 8-13; *(37)*, pp. 298-99; *(63)*, pp. 493-97; *(66)*, pp. 1-8.

Unit 2 — WATERWHEELS

The waterwheel, sometimes called a gravity wheel, is a simple mechanical device to convert water power to mechanical power (rotary motion) against a resistance at the axle of the wheel. The three general types of waterwheels are the undershot wheel, the overshot wheel, and the breast wheel. The undershot wheel was one of the first engines designed to do work. It was introduced over 2,000 years ago by the Egyptians and the Persians. Undershot waterwheels are made so that

when the paddles at the bottom of the wheel are dipped into a stream or river, the current of water exerts a force against the paddles and turns the wheel. Overshot wheels make use of water that is directed at the top of the wheel on the downward side. Breast waterwheels, which are similar to the undershot wheels, are rotated by directing water above the center of the wheel on the downward side. The early waterwheels were constructed of wood; iron parts became common during the Renaissance.

With the introduction of hydraulic turbines in the early part of the nineteenth century, the importance of waterwheels decreased. Today, they are limited to small power plants.

The modern water turbine has a wheel or rotor with a series of blades or vanes. Instead of being placed in an open stream or river, these rotors are enclosed in a housing. Water under pressure is directed to them through pipes and nozzles. Usually, the pressure of the water is built up by damming a water source.

Scientific Principle Involved: Water Pressure

At sea level the pressure of air from all directions is 14.7 pounds per square inch (psi). Water also has pressure. For about every 34 feet below the surface of water, the pressure is multiplied by 14.7 pounds per square inch (the amount of pressure at the surface). The pressure of deep water must be taken into consideration when designing huge dams. The thickness of the base and the strength of the concrete must be such that they will withstand the pressure of the water held back. It is this water pressure that turns the rotors of the water turbines found in the electrical power plants located at the base of dams.

The force of the water strikes against the paddles at the bottom of the undershot waterwheel (left) and at the top on the downward side of the overshot waterwheel (right).

Application of Principle

1. A model waterwheel can be constructed. Water conducted by a tube from a faucet can be directed on the blades of the waterwheel to demonstrate the three types of wheels: undershot, overshot, and breast.
2. The pressure of water can be demonstrated by pouring two quarts of water into a cellophane bag. If the bag is lifted and four holes are punched vertically (near the bottom, about an inch apart) on two sides of the bag, the water will spurt farthest from the holes nearest the bottom of the bag.

Selected References

Note: The numbers in parentheses in this section refer to entries in the list of selected references that appear within this publication immediately after the text.

(13), pp. 509-12; *(16)*, pp. 153-54, 161; *(26)*, pp. 8-13; *(27)*, pp. 214-17; *(46)*, pp. 395, 398-99.

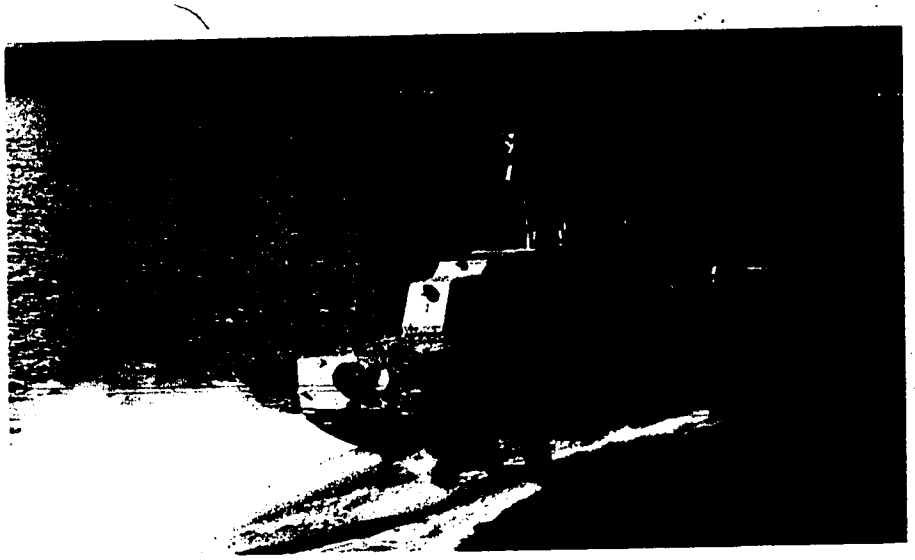

The U.S. Navy's hydrofoil gunboat is powered by water jet and is capable of speeds in excess of 40 knots. Water is drawn through rear struts into centrifugal pump and is then jetted through nozzles near the stern (Boeing Company, Seattle, Washington).

Unit 3 — WINDMILLS

Windmills consist of a rotating element or wheel driven by the wind that causes the turning of a shaft connected to equipment to perform useful work. Windmills are practical when intermittent power is required, as in pumping water to storage tanks and generating electrical power for charging storage batteries in power-supply systems.

The windmill was one of the earliest devices used to obtain power from natural sources. Some records indicate that windmills were in existence prior to the seventh century. The windmill was in use in Persia during the tenth century and in Western Europe near the close of the twelfth century.

During the sixteenth century the general form of the Dutch windmill was stabilized. No essential changes were made until the start of the twentieth century, when research showed the way for significant improvements in the form of sails or windmill arms. Modern windmills have tended toward high-speed designs or types possessing wheels rotating at a large number of revolutions per minute for maximum efficiency in operation.

Present types of windmills are the multivane, the propeller, and the S rotor. The multivaned wheel, though the least efficient of the modern windmills, has the most numerous applications in the United States. The multivaned and propeller windmills possess rotors that revolve about a horizontal shaft, and hence it is necessary to orient the rotors into the wind through the use of a vertical vane or rudder. Since the S-rotor type of wheel is mounted on a vertical shaft, it is possible to take advantage of the current of wind without swinging the entire unit on a vertical axis.

Scientific Principle Involved: Horsepower Output of Windmill

The available power in a current of wind is due to the kinetic energy of the mass of air flowing through a given area per unit of time. In a windmill the area concerned is the frontal area swept out by the rotating element. At sea-level conditions of air pressure and temperature, the available horsepower per unit of area is given by the equation $Hp = 0.00000214 \times V^3$, where V is the wind velocity in feet per second. This equation gives the results of horsepower output of a windmill (area 100 square feet, efficiency 30 percent) as follows:

Wind speed in feet per second	10	20	30	40	50	100
Wind speed in miles per hour	6.8	13.6	20.4	27.2	34.0	68.0
Windmill horsepower	0.06	0.5	1.7	4.1	8.0	64.0

Application of Principle

1. A windmill can be constructed for demonstration and use in generating electrical power for charging storage batteries.
2. A cup-type anemometer can be used or constructed to check wind speed.

Selected References

Note: The numbers in parentheses in this section refer to entries in the list of selected references that appear within this publication immediately after the text.

(13), pp. 228-32; *(16)*, pp. 152-53; *(26)*, pp. 13-15.

Unit 4 — HEAT COLLECTORS

It is safe to assume that the earth's supply of fossil fuels will last for at least one and one-half centuries and that the supply of uranium will last for a century beyond the fossil fuels. However, these fuels are lmited, and energy sources which are not presently being used must be put to efficient use in the future.

The energy of the sun is the most obvious source of energy. The daily supply is tremendous. In two days the sun provides the United States with energy equal to all our remaining fossil fuel reserves. Much of this energy is lost, however, because of clouds and other forms of energy dispersion. Yet the energy reaching the earth is still far greater than our needs. If only 1 percent of available ground area were used for solar power plants, these plants would have a theoretical capability to produce more power than all the steam and hydroelectric power plants in the world.

There are two major problems in making practical use of solar energy – collecting it and using it at low intensity. Heat energy at normal earth temperatures is difficult to put to practical use. More research and study are needed before solar energy becomes a major source of controlled power.

Some current uses, though small, are noteworthy. They are as follows:

1. Solar cells convert solar energy to electricity. Even though the output is low, solar cells are used to power satellites and provide power for remote telephone boosters.
2. Solar evaporation of seawater has been a major source of salt and other ocean minerals for centuries. Also, the evaporation and condensation of seawater as a source of fresh water have been effective in small and experimental installations.
3. Solar cooking units have been designed and manufactured for use in areas having a substantial amount of available sunshine.
4. Solar heating of homes has been successful in regions where there is an abundance of sunshine.

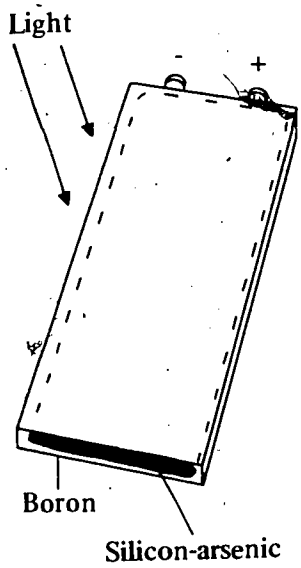

A solar cell is composed of a wafer of silicon-arsenic coated with boron.

Scientific Principle Involved: Heat

The temperature of a body is the measure of the motion of its molecules. Molecules of all substances possess kinetic energy, which may be expressed by the formula $KE = 1/2MV^2$ where KE is kinetic energy, M is mass, and V is velocity. As the temperature of a substance rises, the kinetic energy and, therefore, the velocity of the motion of its molecules increases.

Heat is transferred by conduction, by convection, or by radiation:

1. *Conduction:* Through motion, kinetic energy is transferred from one atom or molecule to other atoms or molecules adjacent to it. In this way heat travels through a body by conduction. Metals are good heat conductors; nonmetallic substances are poor conductors.
2. *Convection:* The increased molecular motion, due to a rise in temperature, causes substances to expand, thereby reducing their density. When any portion of a gas or liquid is heated to a higher temperature than the remaining fluid, it becomes lighter and floats upward. The resulting movement is a convection current. Heat is distributed in gases and liquids by these convection currents.
3. *Radiation:* Heat in the form of radiant energy travels in straight lines through space and transparent materials. Radio waves, infrared light, visible light, ultraviolet light, and x-rays are all forms of radiant energy. When radiant energy, particularly that of the infrared portion of the spectrum, strikes an opaque object, some of it is reflected back into space and some is absorbed. The absorbed portion increases the kinetic energy of the atoms or molecules that make up the substance, thus increasing its temperature.

All opaque bodies radiate some heat, depending on their temperature, and all such bodies absorb some of the radiant energy that strikes them. The amount of absorption or radiation depends mainly on the surface and color of the body. Rough, dark-colored surfaces absorb and radiate more heat. Smooth, light-colored surfaces absorb and radiate less heat.

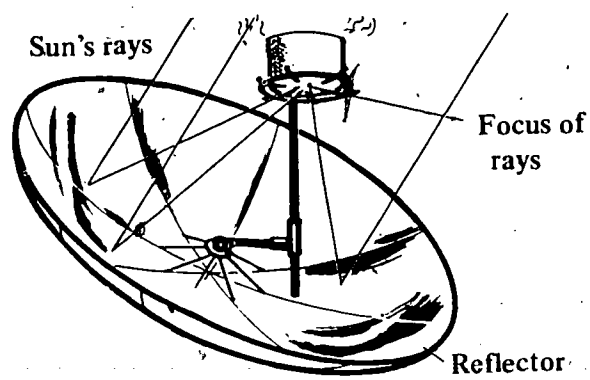

Solar cooking can be demonstrated by using a concave mirror or bright metallic surface to convert the sun's rays to heat for power.

Application of Principle

1. A simple heat collector can be made from a box which is painted a dark color, preferably black. A second collector box, painted white, should also be made. A thermometer should be placed in each box and the boxes placed in bright sunlight. The temperature readings of each thermometer should be recorded at periodic intervals. An appropriate graph can be plotted.
2. Solar cooking can be demonstrated by using a concave mirror or bright metallic surface. A match or small pieces of wood can be ignited at the focal point of the mirror or reflector. A larger unit, designed to roast hot dogs or cook other foods, can be built with a bright, concave, metallic surface as a reflector. Care should be exercised since very high temperatures are possible.
3. The conversion of solar energy to electricity can be illustrated through the use of solar cells. A solar motor assembly can be built which consists of a pair of solar cells wired to a small motor. The motor will operate whenever the cells are exposed to sunlight.

Selected References

Note: The numbers in parentheses in this section refer to entries in the list of selected references that appear within this publication immediately after the text.

(14), pp. 160-70; *(16)*, pp. 177, 217-18; *(26)*, pp. 339-40; *(46)*, pp. 128, 398, 400, 401; *(54)*, pp. 552-53; *(59)*, p. 274; *(66)*, pp. 174-81; *(83)*, pp. 71-78, 182-85, 193.

Unit 5 — SOLAR STILLS

The available supply of fresh water may soon be inadequate for many cities and countries in the world. Many islands, such as the Virgin Islands, have inadequate supplies of fresh water for drinking and for irrigating crops. As a result, considerable effort has been expended to extract ocean water that can be used as fresh drinking water.

One method, often recommended for survivors at sea, involves the evaporation and condensation of seawater. During evaporation the water goes into the air in the container, leaving the salt and other minerals behind. When the water is condensed, it is fresh and free of salt and other minerals.

This method, known as the solar still method, is inexpensive but impractical for large quantities of water. It is currently used as an emergency or low-production method of desalting seawater. Future improvements might find it or a modification of the system more practical to meet the growing demand for fresh water.

Scientific Principle Involved: Distillation of Water

Seawater is not satisfactory for drinking because of its high saline content. Distillation or evaporation has long been used as a method to obtain pure water. The process consists of evaporating or boiling water to form water vapor or steam, which is then condensed to liquid again. The condensation takes place on any surface which is cooler than the water vapor or steam. All suspended matter and any dissolved material which has a higher boiling point than water are left behind.

Application of Principle

A solar still may be developed through the use of a large, clear plastic bag, a black towel, or other dark, absorbent material, and a collector tray. The plastic bag should be rigged as a canopy over the black towel. The towel should be soaked in salt water. When the unit is placed in the sun, the solar energy will be absorbed by the towel and the water will be heated and evaporated. The water vapor will rise to the inside of the canopy. Since the air is cooler within the canopy than at the towel, the water will condense on the inner surface of the clear plastic bag. A collector tray along the edge of the canopy should be used to collect the small quantities of condensed fresh water.

Selected References

Note: The numbers in parentheses in this section refer to entries in the list of selected references that appear within this publication immediately after the text.

(8), pp. 147-49; *(13)*, pp. 213, 336; *(14)*, pp. 169-70; *(43)*, pp. 172-73, 186-89.

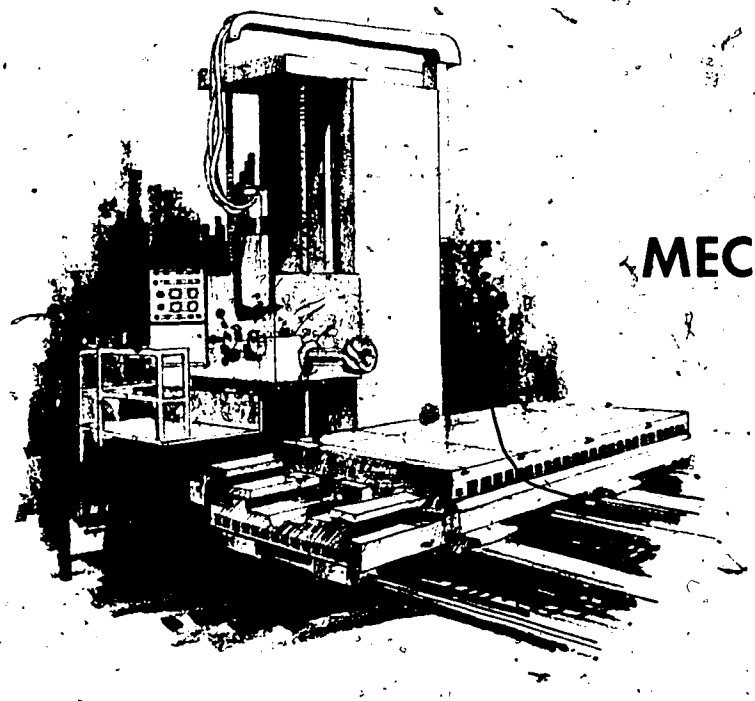

SECTION II
MECHANICAL POWER

Unit 6 — SIMPLE AND COMPOUND MACHINES

Machines are used to transform energy, transfer energy, multiply force, multiply speed, and change the direction of a force. A generator transforms mechanical energy into electrical energy. A steam or gas turbine transforms heat energy into mechanical energy. Machines are used to transfer energy from one place to another; for example, in an automobile the connecting rods, crankshaft, drive shaft, and rear axle transfer energy from the combustion in the cylinders to the rear wheels. Machines are used to multiply force; thus, an engine can be lifted out of an automobile by using a system of pulleys. The pulley system makes it possible to raise the engine by exerting a force which is smaller than the weight of the engine. However, this smaller force must be exerted over a greater distance than the height through which the engine is raised, and the engine moves more slowly than the chain which is pulled. A machine, therefore, produces a gain in force, but only at the expense of speed. Machines are also used to multiply speed; for example, a bicycle is used to gain speed, but only by exerting a greater force. No machine can be used to gain both force and speed at the same time. And machines are used to change the direction of a force, as when a single pulley at the top of a flagpole enables one end of the rope to exert an upward force on the flag as a downward force is exerted on the other end.

Mechanical Advantage

When a chain hoist is used to lift a car engine, the chain moves several feet to raise the engine a few inches. When a vise is tightened, the end of the handle is moved (turned) further than the jaw of the vise is moved. When the lever of a paper cutter is pulled down, the hand of the operator moves farther than any point on the cutting edge. In each of these cases and in countless others, a lesser force is exerted to gain a greater force at the expense of having to exert the lesser force over a longer distance. Each of these machines provides mechanical advantage.

Scientific Principle Involved

By the use of simple or compound machines, a person is able to multiply the force that his muscles are capable of exerting. When a 20-pound force is exerted through a pulley arrangement of a chain hoist to lift a 200-pound engine, the effort of a person is multiplied ten times. Mechanical advantage equals weight supported *(W)* divided by the force applied *(F)* in any mechanical device; or, to put it another way, mechanical advantage equals

W/F. The mechanical advantage then is ten. With the vise the mechanical-advantage principle is the same except that it is achieved by a combination of two simple machines, the wheel and axle and the screw or inclined plane. Likewise, the paper cutter combines the lever and the wedge.

The mechanical advantage of force of a machine is termed theoretical or actual. Theoretical mechanical advantage is the ratio of the distance the effort force moves to the distance the resistance force moves. Actual mechanical advantage is the ratio of the resistance force to the effort force. The efficiency of any machine is the ratio of its actual mechanical advantage to its theoretical mechanical advantage converted to a percent.

Simple Machines

There are six simple machines. These are the lever, the pulley, the wheel and axle, the inclined plane, the screw, and the wedge. Other machines are either modifications of one of these simple machines or a combination of two or more of them. The pulley and the wheel and axle are fundamentally levers, while the wedge and screw are modified inclined planes. Many complicated machines are combinations of simple machines. A combination of two or more simple machines is called a compound machine. A drill press is an example of a compound machine. Many of the simple machines are found in the drill press.

Lever

The lever was one of the first simple machines known to man. In making use of leverage, he found that the turning effort exerted depended on (1) the amount of force applied; and (2) the length of the lever arm. The same form of simple lever is still used to move heavy objects. In modern machines many other more complex forms of this simple machine are used in gaining mechanical advantage or speed of movement. Some examples of tools (machines) that use the lever principle are tire jacks, scissors, hammers, bolt cutters, pliers, tin snips, crowbars, vise handles, wrenches, hand-lever punches, paper cutters, drill presses (feed handles), and squaring shears (treadles). Pushing, pulling, raising, or lowering of handles on most tools are applications of the principle of the lever. Moving the accelerator, clutch, brake pedals, turn-indicator levers, and manual gearshift levers are examples of the application of the lever in automobiles. Operating cranks and kick starters are examples of the application of the lever principle found in other units driven by internal-combustion engines. In most instances the lever is used to increase force.

Scientific principle involved. A lever is a rigid bar that is free to turn about a fixed point called the fulcrum or pivot point. A force applied to one point on the lever may be used to overcome resistant force at another point on the lever. The ratio of the force applied to the resistance that is overcome is called the mechanical advantage of the lever. The theoretical mechanical advantage of a lever may be found by dividing the distance from the effort (force) to the fulcrum by the distance from the resistance (load) to the fulcrum. Levers are of three classes. First-class levers have the fulcrum between the forces; some examples include tin snips, pliers, and scissors. Second-class levers have the load or resistance between the effort and the fulcrum; paper cutters and welding tank trucks are examples. Third-class levers have the effort applied between the fulcrum and the resistance; examples are calipers and tweezers. These tools are familiar examples of the use of levers. Levers may be used to increase force, distance, or speed. If the resistance force is greater than the effort force, then the effort force must

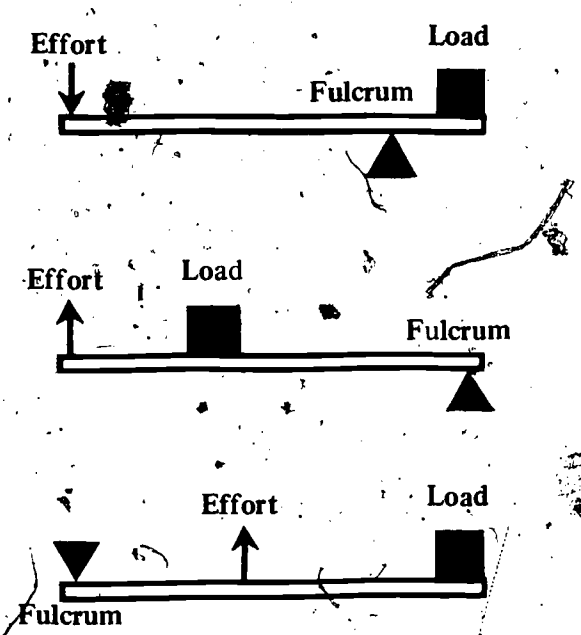

A first-class lever (top) has the fulcrum between the effort applied and the load (e.g., prying with a crowbar); a second-class lever (center) has the load between the effort applied and the fulcrum (e.g., moving a wheelbarrow); and a third-class lever (bottom) has the effort applied between the fulcrum and the load (e.g., using a broom).

move through a greater distance (faster) than the resistance. The work done by the lever can, therefore, never be greater than the amount of work produced by the effort on the lever. If the work done by the lever were greater than that put in, the lever would be an energy-creating or perpetual-motion machine.

Wheel and Axle

The wheel serves a number of purposes. Like a fixed pulley, a road wheel on an automobile supports a load and permits it to move in a direction parallel to the road surface. When power from the engine causes the rear axle to turn, the rear wheels act as levers to move the load they support. The wheels also function as levers when the brakes are applied. Gears, sprockets, pulleys, windlasses, and winches are examples of the wheel and axle.

Scientific principle involved. When in motion, the wheel is a continuously rotating lever. The center of the wheel is the fulcrum. A wheel that, like a front wheel on a car, merely rolls and supports a load has a mechanical advantage of one. Drive wheels on powered vehicles usually have a mechanical advantage of less than one. And wheels with brakes have a similar mechanical advantage. The amount of mechanical advantage depends on the wheel radius, rear axle ring-gear radius, brake drum, or disk radius. A cable or rope windlass is a wheel and axle with a mechanical advantage greater than one. The amount of mechanical advantage gained by a windlass depends on the diameter of the drum and the length of the driving handle.

Inclined Plane

The inclined plane is a great help to workmen because of the mechanical advantage it provides. Oil drums and other heavy objects can be raised or lowered by means of an incline. The same principle is involved in the grading of roads and mountain trails and in the ascent and descent of winged aircraft in flight.

Scientific principle involved. An inclined plane consists of a plane surface with one end or side higher than a plane parallel to the earth's surface. Mechanical advantage is gained when an object is moved up a slanted surface rather than when it is lifted vertically. As an example, a 300-pound drum can be rolled up a 12-foot incline that rises 4 feet at one end by a calculated force of 100 pounds.

Wedge

Man has found many applications of the principle of the wedge. The great force that can be exerted by this simple machine makes it useful in (1) separating or forcing one thing away from another (by the use of axes, chisels, knives, splitting wedges, and wedges used to lift heavy objects); and (2) locking or holding objects together (by the use of wedges in hammer handles; pegs, nails, and other fasteners that are driven into materials; corks in bottles; and gears or wheels that are pressed on the ends of shafts).

Scientific principle involved. The wedge is an object that has a greater cross section at one end than at the other. As a wedge is moved in the direction of its smaller cross section, a greater force is exerted at right angles to this motion by its sides. The wedge is a form of the inclined plane, and its mechanical advantage is gained in the same manner. If a wedge has a length of 6 inches and its cross section increases from zero to 2 inches, it will have a calculated mechanical advantage of three.

Pulley

Pulleys and belts, as well as sprockets and chains, are used in driving all types of equipment. The drill press, lathe (wood and metal), jig saw, milling machine, chain hoist, block and tackle, and many other devices would be rendered useless without the simple machine known as the pulley. The pulley provides a means of transmitting mechanical power from a single driving source to one or more driven mechanisms. The pulley, as used with a chain hoist, provides a mechanical advantage; it makes easier the lifting of a heavy object, such as an automobile engine. Pulley and belt combinations, as found in the drill press, are used for obtaining desired speeds. Pulleys and belts are used to transmit power from internal-combustion engines to drive electric generators and fans of vehicles and stationary units.

Scientific principle involved. A pulley, which is a wheel that turns readily on an axle, provides a means of transferring power through a belt or chain from one location to another. With this transfer of power, it is possible to accomplish work at a location removed from the source of power. In the lifting or moving of an object, a single fixed pulley merely changes the direction of force. In a pulley system with one movable pulley, the force moves twice as fast as the load. A combination of

pulleys of varying sizes may be used to increase or decrease speeds beyond the speed of the driving source. The law governing this principle is that the ratio of the speeds at which the pulleys turn is inversely proportional to the diameters of the pulleys. As an example, an 8-inch pulley at the driving source will make one revolution for every two revolutions of a 4-inch driven pulley.

Screw

Certain devices are regulated with adjusting screws. As adjusting screws are turned, force is applied to control the space between the parts or to provide the resistance that may regulate the flow of gas, liquids, or electricity. The correct setting is determined by the amount the adjusting screw is turned and, in some cases, can be checked with an electronic instrument or a pressure gauge. A few devices that use adjusting screws are oxyacetylene regulators, padding capacitors, paint-spray guns, automobile carburetors, micrometers, and compasses. Clamps and vises make use of the simple machine known as the screw. A common clamping operation is holding material firmly in a drill-press vise while the stock is being drilled. The handle of the vise acts as a lever, multiplying the mechanical advantage of the screw. The total mechanical advantage of such a device is the product of the mechanical advantages of the two simple machines.

Scientific principle involved. A machine screw is a cylindrical body with a helical (spiral) groove cut into its surface. For practical purposes a screw may be considered an inclined plane in the form of a helix. The screw must resist tension (strain) and shearing (cutting). In its application as a simple machine, the screw is machined to precision accuracy in both fit (correct size) and pitch (distance between threads). The fit of the screw determines how much friction will take place as the screw is turned. With too much friction, the screw is difficult to adjust; with too little friction, the screw is difficult to keep adjusted. The pitch of the screw thread determines how finely a particular instrument can be adjusted. If the fit and the pitch are not correct, the effectiveness of the adjusting screw is decreased.

Compound Machines

An engineer designing a steering system for an automobile must devise a set of levers and gears that provides enough mechanical advantage to turn the front wheels easily yet requires a minimum number of turns of the steering wheel for the convenience of the operator. Consideration must be given to the diameter of the steering wheel, which is rigidly attached to the steering shaft; to the ratio of the gears in the steering gear box; and to the length of the levers, which move the wheels at their pivot points. Power assistance (power steering) is often built into an automobile to assist the driver in exerting greater force in turning the wheels.

Scientific Principle Involved

The function of a machine is to convert energy to useful work. The steering system of an automobile is a machine that enables a person to multiply the force produced by his muscles. The lever is a rigid bar that is free to turn about a fixed point. The arm or end to which force is applied is the effort arm; the arm that moves the load is the resistance arm. The mechanical advantage, which depends on the lengths of the two arms, may be increased by lengthening the effort arm or shortening the resistance arm. The gear is a form of lever. It is a series of levers around a circle used to transmit continuous force to another gear. One gear of a pair may be the resistance arm and the other the effort arm. The wheel rigidly attached to an axle is also a form of lever. The rim of the wheel is like a series of levers and is more convenient to use than a single lever. A combination of two or more simple machines, such as the lever, gears, and wheel with axle, is a compound machine. In almost all cases the total mechanical advantage of a compound machine is the product of the mechanical advantages of the simple machines of which it is composed.

Application of Principles

Examples of simple and compound machines can be identified among the hand tools and components of machines in the facility as well as in the systems of internal-combustion engine units. Simple and compound machines can be demonstrated by using (1) a yard or meter stick as a lever to lift weights; (2) weights, levers, and spring scales to show mechanical advantage and torque; (3) brake pedals on automobiles to illustrate classes of levers by disconnecting the brake pedal from the master cylinder and connecting a spring scale or ~~torque wrench~~ to the pedal; (4) a spring scale

connected to the rim of a steering wheel to measure the force necessary to steer the vehicle; (5) input and output transmission shafts to determine gear ratios; (6) the rolling of a grease drum up a ramp to demonstrate the inclined plane; and (7) a wood or metal wedge to secure tool heads.

Selected References

Note: The numbers in parentheses in this section refer to entries in the list of selected references that appear within this publication immediately after the text.

(13), pp. 436-53; *(22)*, pp. 448-516; *(24)*, pp. 132-46; *(26)*, pp. 5-6; *(27)*, pp. 131-42, 353; *(36)*, pp. 9-13; *(37)*, pp. 312-32; *(55)*, pp. 3-30; *(66)*, pp. 104-10; *(69)*, Chapter 10, Chapter 15.

Unit 7 — LUBRICATION

For the proper lubrication of a four-cycle internal-combustion engine, the oil used must prevent rotating and sliding metal surfaces from coming into contact while under heavy shock loads and widely varying temperatures. Internal liquid resistance to flow prevents oil from being squeezed from between moving metal surfaces of bearings, cylinder walls, and valve trains. This property of oil is commonly referred to as viscosity.

Viscosity of Oils

Viscosity of oils must be discussed in terms of (1) body, or the resistance of the oil film to puncture; and (2) fluidity, or the ease with which oil flows through distribution lines and coats metal surfaces. These characteristics can be considered opposites since the more fluidity an oil shows, the less body it has. Modern engines require an oil with great fluidity because of close tolerance but with body resistive to breakdown under the heavy loads and temperatures imposed by high horsepower output.

The viscosity of an oil can be determined by a device called a viscosimeter. The viscosimeter determines the time it takes a measured quantity of oil at a certain temperature to flow through a metered orifice.

Temperature affects oils by increasing their viscosity as the temperature drops and decreasing their viscosity as the temperature rises. According to the viscosity rating system of the Society of American Engineers (SAE), lower numbers indicate a thinner oil, higher numbers a thicker oil. Winter grade oils have a *W* after the SAE number to indicate that the oil was tested at zero degrees F. and 210 degrees F. The three automotive winter grades are SAE5W, SAE10W, and SAE20W. Automotive oil not tested at zero degrees F. is rated as SAE20, SAE30, SAE40, or SAE50. Oils can have multiple ratings, such as SAE10W-30. This number means that the oil can be substituted for grades SAE10W, SAE20W, and SAE30.

The American Petroleum Institute (API) has devised a system for classifying motor oils according to *engine service requirements*. This classification system provides six service ratings, three for gasoline engines and three for diesel engines. The first letter in each designation indicates the type of engine: *M* for the gasoline and LPG engine, and *D* for the diesel engine. The second letter in each designation indicates the type of service. The three service ratings for gasoline or spark-ignition engines are (1) *MS* for severe service; (2) *MM* for medium service; and (3) *ML* for light service.

A Viscosity Index (VI) evaluates oil in terms of viscosity change caused by variations in temperature. The adopted VI rating scale goes as high as 300. The higher the VI number indicated, the less the oil viscosity varies with temperature. In a very cold climate, the viscosity index is very important. It may be necessary, for example, to start an engine at below zero degrees F., but in a few minutes have oil temperature within the engine at 200 degrees F. In this situation the oil must not be so thick at starting that it prevents cranking, but not so thin at operating temperature that engine damage results.

Oil companies blend oil with additives to give the proper viscosity index for the type of service for which the oil is intended. Multiviscosity oils, in wide use now, are premium oils that have a high VI rating. The viscosity of an oil used in an automobile engine has much to do with the life of that engine. Manufacturers' recommendations should be followed carefully in selecting and using oil.

With the development of improved lubricating oils and more efficient oil and air filters, automotive manufacturers have liberalized their recommendations for oil changes. When favorable operating conditions exist, some manufacturers recommend that oil should be changed every two months or after 4,000 miles of operation, which-

ever occurs first. Other manufacturers favor an oil change every two months or after 6,000 miles, whichever occurs first. All recommend that for more adverse driving conditions, such as start-and-stop driving, cold-weather driving, or driving through dusty areas, the oil should be changed more frequently.

Scientific Principle Involved: Fluid Friction and Viscosity

When a liquid (fluid) is set in motion, internal structures (molecules) move at different velocities. Friction is involved as these structures slide over or rotate around each other. This friction is known as viscosity.

A liquid is made up of molecules in motion which are of different sizes for different liquids. Liquids with large molecules tend to have a higher viscosity than liquids with small molecules. This phenomenon might be explained by comparing the larger molecules to rocks and the smaller molecules to fine sand. It is much easier to force a pile of sand to flow than a pile of rocks because rocks tend to pile up and resist motion. Liquids with different-sized molecules can be mixed to obtain a desired viscosity. The smaller molecules can be thought of as little bearings that fit in with the larger molecules to provide a "ball-bearing" effect to reduce the resistance to flow of the larger molecules.

The molecular structure of a liquid is always in motion; how active the molecules are is determined by temperature. The lower the temperature, the slower and closer together are the molecules. The higher the temperature, the more rapidly and farther apart the molecules move. The more activity displayed by the molecules, the less is the energy that will be necessary to cause the liquid to flow. The opposite is true for lower temperatures. If the temperature is raised too high, the molecules tend to get so far apart that, for all practical purposes, the viscosity of the liquid may disappear.

Application of Principle

1. Obtain several different SAE grades of oil. Provide a funnel with a small metering orifice. Heat measured quantities to a given temperature (such as 200 degrees F.) and time the flow through the funnel. Cool the same samples in dry ice or in a refrigerator to a given temperature (such as 32 degrees F.). Compare the rates of flow.
2. Show the effect of cold on the cranking of an engine by cooling a small gasoline engine with dry ice. Compare how difficult this engine is to start with different grades of engine oil in the crankcase.
3. Compare the viscosity of various oils by a simple device. Place oils to be tested in plugged test tubes, each of which contains a small steel ball. Place the test tubes in a rack so that all can be rotated at the same time. The more viscosity an oil has, the longer will it take for the oil to reverse in the test tubes and for the steel ball to settle to the bottom.

Selected References

Note: The numbers in parentheses in this section refer to entries in the list of selected references that appear within this publication immediately after the text.

(4), p. 37; *(20)*, pp. 260-90; *(21)*, pp. 338-45; *(22)*, pp. 174-75; *(27)*, pp. 225-26; *(66)*, pp. 39-43; *(69)*, Chapter 5, p. 5; *(75)*, Chapter 10, pp. 1-2.

Functions of Lubricating Oil

Lubricants are used to slow down wear and to reduce friction between two moving surfaces. The lubricating oil used in the four-cycle internal-combustion engine performs at least seven functions. It (1) lubricates moving parts to reduce wear; (2) reduces friction and power loss; (3) prevents spot overheating by absorbing heat as it circulates; (4) seals piston rings, pistons, and cylinder walls to prevent loss of gases on the power stroke; (5) absorbs shock in bearings; (6) dissolves lacquerlike substances and suspends other by-products of broken-down oil and worn metal through the use of detergents and the oil-filter action (helps keep engine clean); and (7) neutralizes acids (formed in the breakdown of oil by heat which would damage metal parts) through the use of additives.

Cylinder walls, pistons, and piston rings are exposed to the high heat of the burning fuel-air mixture (particularly on the power stroke). This heat will evaporate some of the oil coating on pistons and cylinder walls. The oxygen from the unused air in the fuel-air mixture together with the high temperature will partially burn part of the oil coating the exposed surfaces, leaving carbon. The heat also "cracks" some of the oil molecules, causing the formation of additional carbon.

Lubrication of the two-cycle engine is quite different from the lubrication of the four-cycle engine. Since the fuel mixture must travel through

the crankcase, a reservoir of oil cannot be stored there. The lubricating oil is mixed with the gasoline and is then put into the gas tank. (Two-cycle engine manufacturers are now developing and marketing engines with oil-metering devices that eliminate the need for premixing the oil and gasoline.) The lubricating oil for all crankcase parts enters the crankcase as part of the fuel mixture. Millions of tiny oil droplets suspended in the mixture of gasoline and air settle on the moving parts in the crankcase, providing lubrication.

Scientific Principle Involved:
Effect of Heat on Hydrocarbon Molecules

Heat is one form of energy and has the capacity of doing work (both useful and destructive). High temperature is used in petroleum refineries to break large hydrocarbon molecules into smaller ones (cracking) in order to obtain more gasoline. The carbon and hydrogen atoms of the hydrocarbon molecules are held together by chemical bonds. When heat is added and the temperature is thereby raised, the atoms begin to vibrate, stretching the bonds (very much like bouncing a ball tied to a rubber band). When the vibration becomes too violent, the bonds begin to break.

Application of Principle

1. Demonstrate the effect of heat on lubricating oil by dipping one end of a 1-foot welding rod in oil, holding the rod with pliers, and heating the opposite end with a torch. The heat travels along the rod, and the oil begins to smoke (evaporate). Continued heating produces a black, sticky coating on the rod from the oil (carbon and lacquerlike substances). Test and compare various brands and viscosities of oils. Also test used oils (crankcase drainings).
2. Check the acid content of used oil by placing a small quantity of crankcase drainings on a piece of metal.

Selected References

Note: The numbers in parentheses in this section refer to entries in the list of selected references that appear within this publication immediately after the text.

(4), pp. 36-42; *(21)*, pp. 299, 302; *(22)*, pp. 172-79; *(27)*, pp. 68, 225-26; *(36)*, pp. 111-12; *(66)*, pp. 102-3; *(69)*, Chapter 5, pp. 2-7; *(75)*, Chapter 10, pp. 1-10.

Dry, Greasy, and Viscous Friction

Friction is a force which resists motion and converts the energy of motion into heat. The "drag" due to friction depends on the roughness of the surfaces in contact, the amount of surface, and the force holding them together. Friction is both a help and a hindrance in the operation of an automobile. It helps a person to hold and turn the steering wheel. Without friction the brakes would not work and the tires would not have traction. The steering wheel, brakes, and the tire tread are all designed to increase the effectiveness of this helpful friction.

However, friction in the automobile engine and along the power train wastes energy and causes wear. The use of machined and polished moving parts, bearings, and proper lubrication all help to decrease the amount of friction. They enable the engine (and power train) parts to last longer and the automobile to perform more efficiently.

There are three types of friction: dry, greasy, and viscous. Dry friction occurs when two dry surfaces rub together. The friction between the brake lining and the brake drum is one example of dry friction. Greasy friction occurs when a small quantity of oil or grease is applied between the two contacting surfaces. Grease is applied to automobile door latches and the front wheel suspension system. Viscous friction occurs between the layers of a liquid. The lubricating oil in an automobile engine is forced between the moving metal surfaces. Viscous friction is thus substituted for sliding friction.

Scientific Principle Involved:
Dry, Greasy, and Viscous Friction

Atoms and molecules make up solids, liquids, and gases. They all behave as though they were very tiny balls. The surfaces of highly polished solids appear to be perfectly smooth. However, photographs of these surfaces, taken with an electron microscope, show "hills and valleys." The "hills" of one contacting solid surface tend to fit into the "valleys" of the other, causing friction (resistance to movement) between solid surfaces. The molecules of greases are larger and move about more slowly than those of oils (at the same temperature). The constant movement of the molecules prevents the formation of permanent "hills and valleys" between layers of greases and oils. Friction in both oils and greases should be, and is, less than solid friction, and oil (viscous) friction is less than greasy friction.

Application of Principle

1. Measure relative friction by using several blocks of the same size (but of different materials), a spring balance, a long, flat surface, grease, and lubricating oil. Tie a string to each block in order to attach the spring balance. Test each block for all three types of friction (dry, greasy, viscous). Place a block on the long, flat surface with the spring balance attached to the block. Pull the spring balance steadily until the block begins to move. Read and record this "starting force" (pull). (The difference between the starting and moving force is the friction.) Test the blocks for dry friction and record the date of testing in a table. Coat each block with grease and repeat the experiment. Observe and record the starting force and the moving force for each block. Cover the long, flat surface with oil and repeat the experiment. Again observe and record the starting force and moving force for each block.
2. Measure the force needed on the steering wheel of an automobile to turn the front wheels. Place different surfaces under the front tires.

Selected References

Note: The numbers in parentheses in this section refer to entries in the list of selected references that appear within this publication immediately after the text.

(13), pp. 440-41, 445-46; *(14)*, pp. 81-82, 95-98; *(22)*, pp. 49-51; *(27)*, pp. 225-26; *(66)*, pp. 38, 86; *(69)*, Chapter 5, pp. 2-3.

Unit 8 — SPRINGS

Mechanical energy can be stored in a spring and used in many ways in machinery, engines, watches, toys, and other devices. A spring has the capacity to store energy and release it when needed. Springs are made of steel or brass. One of the most frequent uses of springs is to supply motive power in a mechanism. A good example of this is found in the windup toy. When the toy has been wound up and the lever has been activated, the toy moves about, releasing the stored energy of the wound spring. The valve springs in an automobile engine are also used to supply motive power or energy. The spring pushes or holds the valve firmly in the valve seat of the engine until the rotating cam mechanism of the engine forces the valve lifter to open the valve. When the lifter stops pushing on the valve, the spring then pushes the valve back into the valve seat.

Another use for a spring is to return displaced mechanisms to their original position. Examples are a door-closing spring or the spring on a cam follower. The coil or leaf spring on the car frame is connected to the axles of an automobile and is used to keep the body at a certain level with respect to the road. As the automobile moves along a highway and irregularities move the car body up and down, the springs help return the body to its original position. These same springs act as shock absorbers on the automobile so that the bouncing effect is absorbed by the springs and is not transmitted to the rider in the car. In modern automobiles hydropneumatic devices are used to limit the speed of the spring action.

Springs are classified according to their shapes. The three main types of springs are the flat or leaf spring, the helical spring, and the spiral spring. The flat or leaf spring, which is made of plates or leaves, has the special advantage of both pushing or

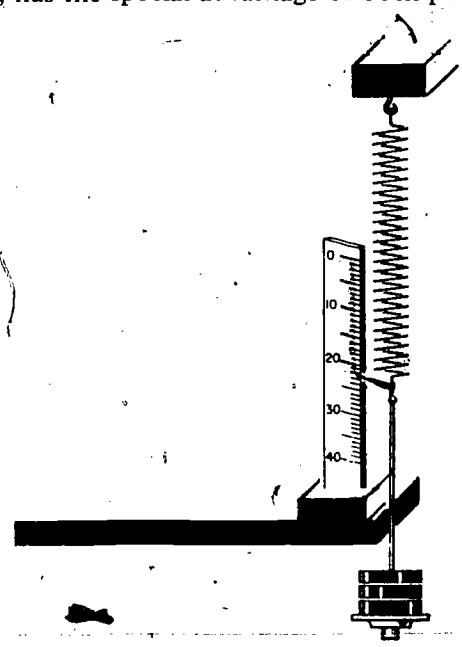

If the pointer attached to the spring returns to the zero mark after the weight is removed, the spring is perfectly elastic.

pulling at right angles. The helical spring consists of a wire wound in a helix. It can be used for compression, such as a valve spring, or for tension, such as a brake spring. The spiral spring is a wire or band wound in a spiral that produces a torque, such as the spring found in a recoil device used in a lawnmotor starter.

Scientific Principle Involved: Elasticity

When a force is applied to a solid body, distortion of the body occurs. The greater the force, the greater is the deformation. In an elastic substance the displacement of the atoms and molecules of the substance under stress sets up forces of attraction and repulsion which resist the distorting force and tend to restore the body to its original size and shape. A substance is said to be perfectly elastic if the restoring force, called "elastic recoil," is equal and opposite to the force causing the distortion. If the body does not resume its normal shape and size on removal of the distorting force, its "elastic limit" has been exceeded. Certain metals, such as steel and brass, which possess desirable elastic properties, are used for making springs of various shapes and sizes to withstand the forces of compression, tension, and torsion for which they are designed.

Hooke's law states that *within the limits of perfect elasticity, strain is directly proportional to stress.* This is the principle upon which a spring balance operates: the amount the spring is stretched (or compressed) is directly proportional to the force applied. Thus, if 600 pounds will compress a coil spring 3 inches, 1,200 pounds will compress it twice as far, or 6 inches.

From the standpoint of conservation of energy, the spring is practically 100 percent efficient because it can return practically all of the energy stored in it on distortion if its elastic limit is not exceeded.

Application of Principle

1. Employ springs as a means of absorbing, storing, and imparting mechanical energy. Activities involving the measurement of the energy in springs might include the following:
   a. Test the tension of a screen door spring with a scale and record the pounds pull at various lengths as the spring is stretched.
   b. Test compression springs, such as internal-combustion engine valve springs, on a valve-spring tester, again noting the force required to compress the spring and the change in the length or height of the spring.
   c. Check the torque on a torsion bar with either a scale and lever or a torque wrench.
2. Pursue the method by which the spring is actuated. Some of the methods are as follows:
   a. Use a cam (like that used in the internal-combustion engine) to actuate the valve.
   b. Apply pressure, either hydraulic or pneumatic, to push on a valve (for example, check valves in a fuel pump).
   c. Use a twisting effort, such as the torsion bar or curtain roll, to demonstrate spring action.
3. Gather a variety of springs and identify them as to type (helical, spiral, or leaf); function (to absorb, store, or impart energy); or force which they counteract or react to (compression, tension, or torsion).

Selected References

Note: The numbers in parentheses in this section refer to entries in the list of selected references that appear within this publication immediately after the text.

(4), pp. 133-37; *(22)*, pp. 517-31; *(27)*, pp. 190-91; *(69)*, Chapter 15, pp. 7-16; *(75)*, Chapter 16, p. 7, Chapter 39, p. 1, Chapter 40, p. 4, Chapter 42, p.3.

Unit 9 — CLUTCHES

The purpose of a clutch is to permit the coupling or uncoupling of a power source (engine or motor) and the drive unit. In an automobile with a standard (not automatic) transmission, the clutch makes it possible to transmit the power from the engine through the power train to the wheels. The clutch utilizes the scientific principle of friction. When the clutch is in a coupled position (engaged), it provides the link which allows power to flow from the engine to the rear wheels. In the uncoupled position (disengaged), it does not permit power to flow. When the clutch is disengaged, the gear may be shifted easily. When the clutch is gradually engaged, with the automobile in gear, the vehicle moves smoothly in the selected direction.

Classifications of clutches and examples of each include (1) the disk clutch, used in automobile transmission couplings; (2) the cone clutch, used in standard transmission synchronizers and engine-lathe controls; (3) the overrunning clutch, used in starter drives and automatic transmissions; (4) the sprag clutch, used in automatic transmissions; (5) the ratchet-dog clutch, used in automobile bumper jacks; and (6) the centrifugal clutch, used in motorcycles, lawnmowers, and go-carts.

All automobile clutches are similar in construction and operation; they are classified as single- or multiple-disk. The single disk is most widely used. Frictional contact in the clutch is made between two smooth, metallic driving surfaces and facings riveted to a driven disk. Pressure springs hold the flywheel, pressure plate, and the friction disk together. The hub of the friction disk is splined to the transmission shaft. Depressing the clutch pedal releases the spring presure, and uncoupling takes place. The flywheel, pressure plates, and the friction disk then turn independently. Releasing the clutch pedal engages the units, and the vehicle moves.

Scientific Principle Involved: Sliding Friction

One scientific principle involved in the operation of a clutch is sliding friction. This friction acts parallel to the surfaces which are sliding over one another and in the direction opposite to that of the motion. The degree of friction depends upon the materials and their surfaces. Sliding friction occurs between the brake lining and the brake drum on a

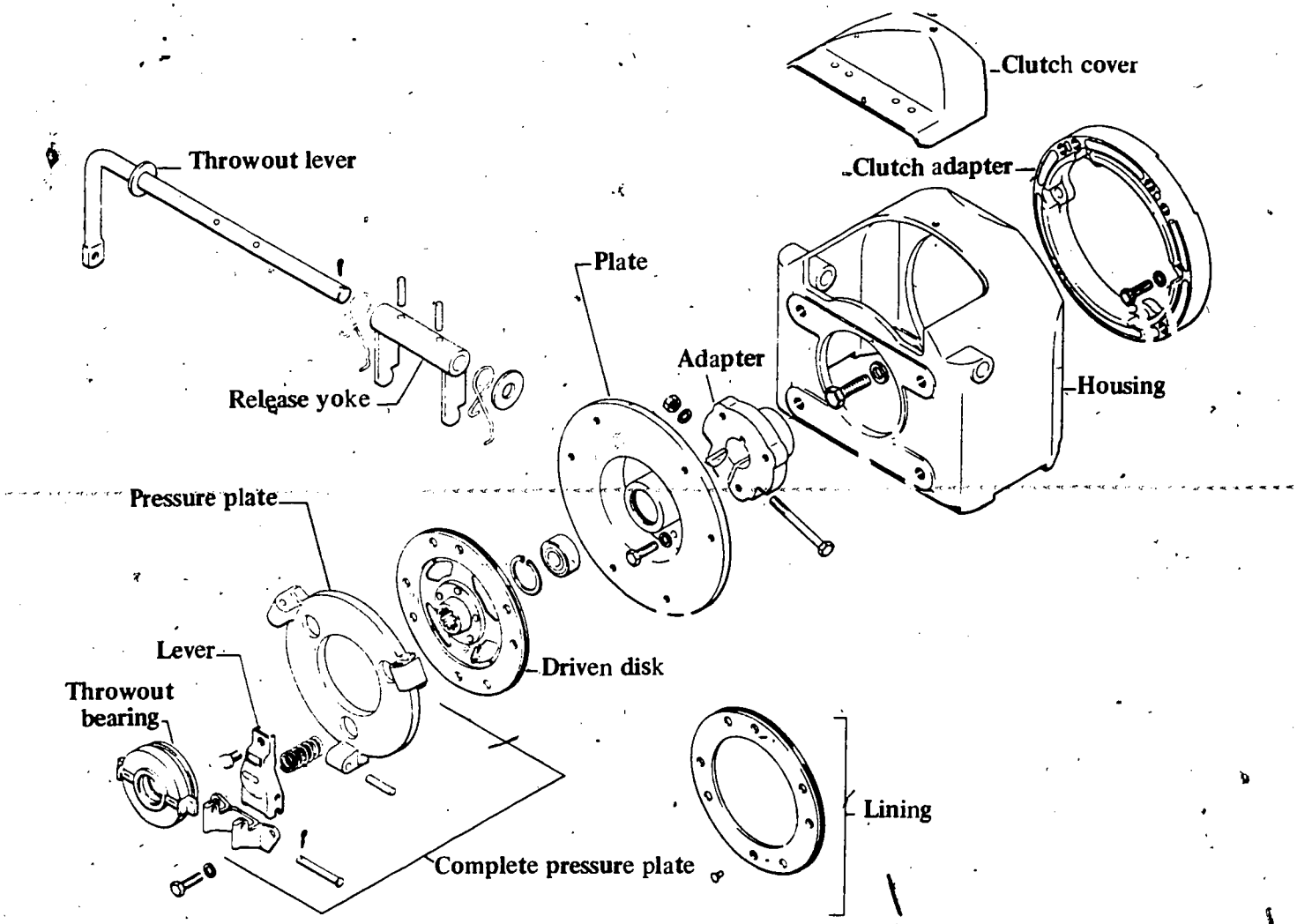

The illustration presented above gives an exploded view of the clutch unit used in the three-wheel Cushman gasoline truckster (Cushman Motors, Lincoln, Nebraska).

car. It also occurs when two facings on the clutch are pressed between the flywheel and the pressure plate. When the friction becomes great enough between the two surfaces, slippage is almost nil. The two most important factors in this frictional force are the nature of the surfaces involved and the force pressing the surfaces together. Clutch efficiency is, therefore, dependent on the clutch's ability to transmit power from the driver to the driven through friction and, conversely, on its ability to separate the driven from the driver and avoid friction.

Application of Principle

1. Raise an automobile with a bumper jack. Examine the ratchet-dog clutch and observe it as it operates in the jack.
2. Check the operation of a coaster brake on a bicycle; this overrunning clutch stops the bicycle as increasing pressure is applied by the rider's foot on the pedal.
3. Turn the tuning knob on a radio to either the extreme left or extreme right position; continue turning the knob and note the slippage that occurs. (This is an application of the friction-clutch principle.)
4. Check cone-clutch assemblies on engine and woodworking lathes.
5. Examine, disassemble, and reassemble an automobile clutch assembly. Identify the various parts and study their functions.

Selected References

Note: The numbers in parentheses in this section refer to entries in the list of selected references that appear within this publication immediately after the text.

(4), pp. 155-56; *(22)*, pp. 391-405; *(27)*, pp. 64-66; *(39)*, pp. 17-18; *(55)*, pp. 38-45; *(60)*, pp. 49-50; *(66)*, pp. 104-5; *(78)*, pp. 356-63.

Unit 10 — DYNAMOMETERS

The dynamometer is a device for determining the actual horsepower (hp) or torque (twisting in foot-pounds) that is available at the crankshaft of an internal-combustion engine or at the driving wheels of a vehicle. Dynamometers may be grouped as follows according to the three methods used to provide load: (1) the use of an electrical generator, using an electrical load; (2) the use of liquids under pressure, using a hydraulic load; and (3) the use of a mechanical shoe or disk brake, using a frictional load.

For the testing of automotive-type equipment, the electrical-load dynamometer has proven most practical. This unit is constructed to measure the power available at the driving wheels of the vehicle. Floor-mounted rollers connected to an electrical generator are driven by the wheels of the vehicle. The voltage and amperage (wattage) output of the generator circuit is instrumented to indicate the horsepower and torque at any given horsepower or engine revolutions per minute (rpm) according to the formula *Hp = volts* × *amperes* ÷ *746*, or *watts* ÷ *746*, 1 horsepower equaling 746 watts.

In this testing it is necessary to take into consideration that the power actually measurable at the crankshaft of the engine would be much greater than at the driving wheels because of the power losses in the power-transmission train.

Electrical-load dynamometers and, occasionally, hydraulic-load dynamometers, are available that couple the engine unit directly to the dynamometer for very accurate engine evaluation.

The frictional and hydraulic-load dynamometers couple the crankshaft of the engine to a lever arm that bears on a weighing scale. The engine is placed under load at a given rpm by the frictional-brake unit or hydraulic pump while the lever is pressing on the scale. The torque in foot-pounds is determined by the simple formula which states that torque (in foot-pounds) equals lever arm length in feet, scale reading in pounds. Thus, *Hp = torque* × *rpm of engine* ÷ *33,000*. (The figure 33,000 comes from James Watt's determination, based on careful measurement, that a strong horse can do about 33,000 foot-pounds of work per minute.)

Scientific Principle Involved: Horsepower

Work can be accomplished by sliding, rolling, lifting, or rotating anything having mass. Work is done when a force acts on matter and changes its motion. A force (energy) can be supplied by a natural phenomenon (such as wind) or by a mechanical device (such as an engine or an electrical motor). In relation to power output, a force

must have a time factor or rate of doing work. Power represents a mass being displaced over a distance in a certain period of time. Power is a function of the time it takes to accomplish work (force X distance moved). For the use of science and industry, it has been established that a horsepower represents the lifting of 33,000 pounds 1 foot in 1 minute. The formula is expressed as *Hp = weight in pounds X distance moved in feet ÷ 33,000 X time in minutes.*

Application of Principle

1. A simple dynamometer for small gasoline engines of about 1 horsepower can be constructed from a typical 12-volt automotive alternator or direct-current generator with a regulator. A variable resistor or carbon pile of .1 or 1 ohm capable of dissipating at least 1,500 watts should be provided for the generator load circuit. A tachometer suitable to the engine should be provided with an accurate voltmeter and ammeter. At a given rpm the load should be adjusted to give a slight drop in voltage with a maximum ampere indication.
2. A hydraulic dynamometer can be constructed by driving a hydraulic pump or water pump with a small engine and measuring the pressure and flow developed through an orifice at a given rpm.
3. A frictional dynamometer can be constructed from an automobile brake and a scale. Measure the foot-pounds of torque produced at a given rpm.
4. An experimental or demonstration dynamometer for small engines can be constructed similar to the one illustrated.

When this type of dynamometer is used, the engine must be started with no load on the generator. Once the engine is operating at peak performance, the electrical load is thrown into the circuit. The students can (a) record the voltage and amperage; (b) multiply these readings to determine the wattage output of the engine-generator; and (c) divide this product (wattage) by 746 to determine the horsepower.

In one high school the students calculate the actual horsepower of automobiles and test the performance of "tuned" and "untuned" engines by making use of a highway going over a hill of known elevation. By knowing the height of the hill, the total weight of the vehicle, and the time required to accomplish this run, the students figure the total foot-pounds of work accomplished per minute; by dividing the total foot-pounds of work per minute by 33,000, the students figure the average horsepower actually developed.

Selected References

Note: The numbers in parentheses in this section refer to entries in the list of selected references that appear within this publication immediately after the text.

(4), p. 33; *(11)*, pp. 98-100; *(20)*, pp. 371-74; *(22)*, pp. 54, 253-54; *(26)*, p. 304; *(27)*, p. 125; *(47)*, pp. 82-83, 171-72; *(66)*, p. 86; *(76)*, pp. 34-37; *(78)*, pp. 52-54.

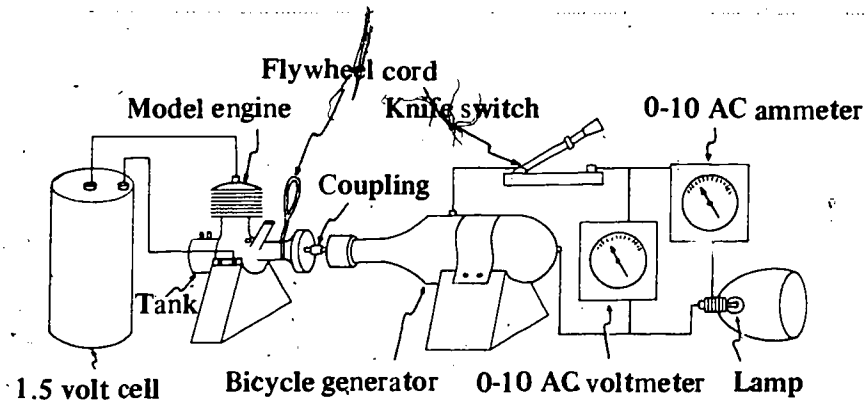

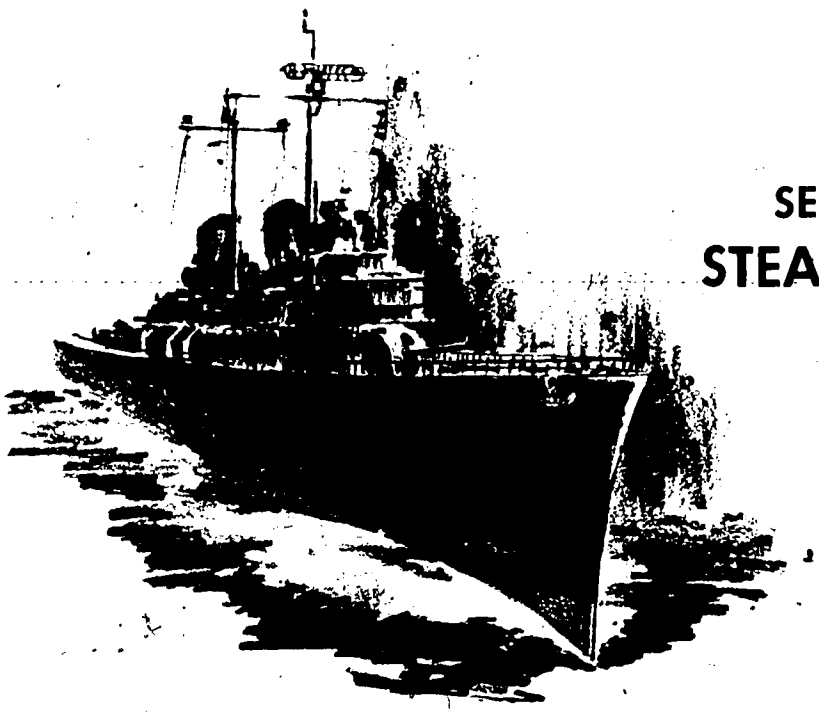

SECTION III
STEAM POWER

Unit 11 STEAM ENGINES AND TURBINES

When water is boiled and changed into steam, water expands about 1,700 times. If this steam is collected in a closed container and is not permitted to expand to its full volume, the pressure (and the boiling temperature of the water) will increase. When this pressure is released, it has the potential to do work. In this way heat energy (used to boil the water) can be converted into mechanical energy. The steam can be used to drive the piston of a steam engine or to drive the blades of a steam turbine. Since the generation of steam is usually done by burning the fuel outside the engine, most steam engines and steam turbines are external-combustion engines. Wood, coal, or oil is used as fuel. Nuclear power plants use heat from a nuclear reactor to produce steam.

The steam turbine has become one of man's most important sources of power. Approximately 80 percent of all electricity used in the United States is generated by steam turbines. Many ships use steam turbines to drive their giant propellers.

In a large steam turbine, the two main parts are the rotor and the stator. The rotor is a long shaft on which are mounted wheels containing a large number of sets of blades. The stator, which encases the rotor, contains a large number of fixed nozzles. Steam from the nozzles exerts pressure against the sets of blades, causing the rotor to turn. The diameters of both the rotor and the stator are larger near the outlet end to allow for the expansion of the steam. The pitch and size of the blades vary throughout the length of the turbine so that the expansive force of the steam is used efficiently.

Steam also has other valuable functions. It can be used to heat buildings and clean automotive or

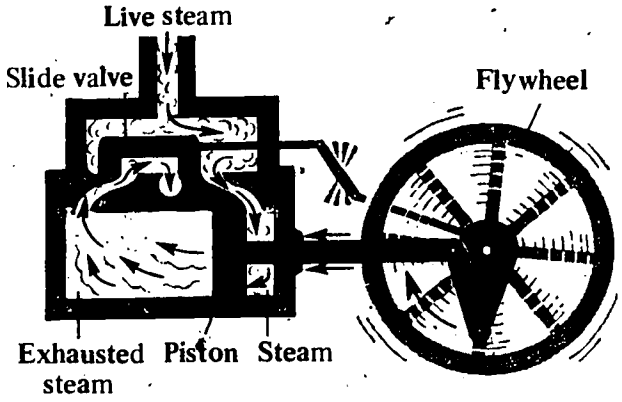

In the steam engine of James Watt, the steam pushes the piston first on one end, then on the other end, so that there is power when the piston slides forward as well as when it slides backward.

industrial equipment. At one time the steam engine was the source of power used in automobiles. At present, in an effort to use fuel more efficiently and reduce smog, experiments are being conducted to develop a compact steam engine or turbine that can serve as a source of power for the automobile.

Scientific Principle Involved: Conversion of Heat

Whenever a gas is trapped in a confined container and the temperature is increased, the pressure increases. This pressure can be used to apply a force which can move pistons, rotate blades, or provide force for other purposes. Steam engines and turbines are heat engines using external combustion. They are able to change heat energy to mechanical energy.

Application of Principle

1. Demonstrate that the energy of steam can move an object. Punch holes diagonally from each other near two corners of a metal (spice) can. (These holes should be about one-half inch above the bottom and just around the corner on the broad surface of the can.) Put about two tablespoonfuls of water in the can and close the opening in the top. Hang the can by a thread. Apply heat to the bottom of the can.
2. Construct a simple steam turbine by using a pressure cooker or a tin can to generate steam. Fasten a small tube to the pressure cooker outlet or outlet of the constructed boiler and direct the steam to the blades of a turbine. (The turbine can consist of a few blades mounted on a small shaft or a squirrel-cage-type blower.)

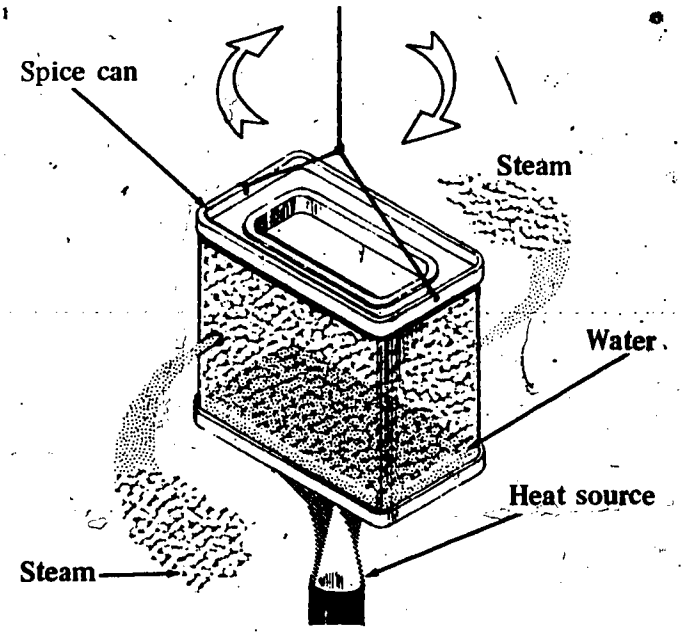

The energy of steam can be made to move an object.

Selected References

Note: The numbers in parentheses in this section refer to entries in the list of selected references that appear within this publication immediately after the text.

(16), pp. 154-61; *(26)*, pp. 11-22, 73-88; *(27)*, pp. 271-76; *(36)*, pp. 15-18; *(37)*, pp. 347-53; *(43)*, pp. 144-69; *(44)*, pp. 74-101; *(66)*, pp. 142-48; *(73)*, pp. 14-20.

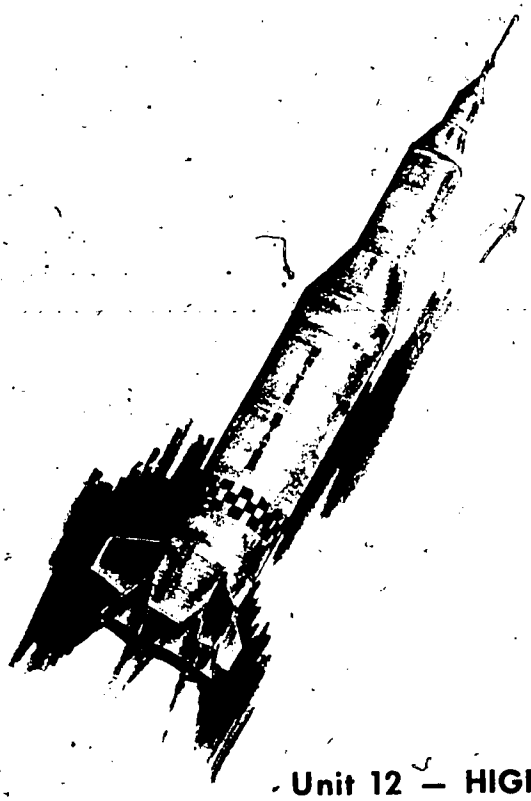

SECTION IV
THERMAL POWER

Unit 12 — HIGH-ENERGY RATE FORMING

High-energy rate forming has developed from an interesting curiosity to a metalworking reality. There are extensive possibilities for the application of this process in a wide variety of industries. High-energy rate forming of metals now includes the operations of forming, sizing, flanging, engraving, compacting, welding, hardening, and controlled cutting. Some of these operations are used commercially; others are still in the experimental stage. The material used in these operations may be in bulk, plate, sheet, or powder form. There are four methods of high-energy rate forming: explosive, electrohydraulic, electromagnetic, and pneumatic-mechanical.

Low and high explosives are used in *explosive forming*. Low-explosive powders do not actually explode but burn at a rate of several hundred feet per second and are accompanied by the rapid evolution of gas. Expansion of the gas, through either air or some other medium, such as water or a hydraulic plunger, forces the blank to the contour of the die. Low explosives are used in a closed chamber. High explosives detonate in a few millionths of a second and produce shock waves whose magnitude is in millions of pounds per square inch (psi). The charge is suspended in a medium over the material to be formed. The medium used to conduct the shock waves is usually air or water, but oil, plastics, powdered talc, and clay are also used. The charge may be shaped to direct the shock waves to specific areas of the blank. Explosive forming is used in extruding, forging, shearing, and blanking. Metal and ceramic powders have been successfully compacted by the technique of explosive forming.

Electrohydraulic forming is sometimes referred to as hydrospark forming or electric-discharge forming. The discharge of an electric spark under water produces a shock wave with sufficient energy to form metal parts. Forces equal to 6,000 horsepower (hp) within 40 millionths of a second are possible at present. The equipment used in electrohydraulic forming consists basically of a high-voltage power supply, capacitors for storing the charge, a discharge switch, and a coaxial electrode. The force can be varied by changing the voltage. The advantages of electrohydraulic forming over many other forming processes are greater safety, more precise control, and lower cost.

Another concept in high-energy forming is *magnetic forming*. Electrical energy produces magnetism which acts as the forming force. The magnetic pulses, lasting only six millionths of a second, exert pressure up to 560,000 pounds per

square inch. Magnetic forming has three classifications of forming: compression, expansion, and hammer. This forming method has the distinct advantage of forming material without marring or scratching the surface, thus eliminating further finishing operations. It can perform as many as 600 forming operations per hour. Magnetic forming is used to (1) form tubing into precise and difficult shapes; (2) expand tubing into bushings, hubs, and split dies; (3) swage inserts, fittings, and terminals into many different parts, including rope, cables, and other parts; and (4) coin, shear, and blank.

The Hyge machine, built by Convair and used for *pneumatic-mechanical forming,* is actuated by 2,000 pounds per square inch of nitrogen. When the compressed gas is suddenly released from its storage chamber, it drives a piston-column assembly at high velocity into a liquid medium which acts against the blank in the die. The machine also has been used to extrude tungsten, forge ferrous and nonferrous alloys, and compact ceramic and metal powders. Advantages of pneumatic-mechanical forming over many other forming processes are the elimination of explosives as the power source and the high repeatability of the operation.

Scientific Principles Involved: Work, Power, Energy, Force

The four methods of high-energy rate forming covered in this unit deal primarily with the scientific principles relating to energy, force, power, and work. Energy is defined as the ability to do work (or the capacity for doing work). In mechanics there are two forms of energy, kinetic and potential. Kinetic energy is energy due to the motion of a mass. A moving automobile, exploding gunpowder leaving a shell, compressed gas released from a storage chamber, and an electrical charge leaving a capacitor all have kinetic energy. Potential energy is stored energy. A coiled mainspring of a watch and a charged capacitor have potential energy. Force produces or prevents motion. It is also defined as a push or pull. Work is done when force acts on matter and changes its motion or when force moves an object against an opposing force. Power is the rate of doing work. In high-energy rate forming, the work accomplished depends upon the energy which produces the force.

Application of Principles

High-energy rate forming can be demonstrated through the use of an explosive-forming device which employs a .22 caliber cartridge (blank) as the power source. The explosive-forming device has four parts: frame, bolt, explosion chamber, and die. (See the assembly drawing.) Power loads (cartridge-type powder charges) are available in various ratings: extra light, light, medium, heavy, extra heavy, and magnum. Medium loads are satisfactory for use with sheet metals such as .015-inch tinplate, .030-inch annealed copper, and .035-inch soft aluminum. Efficiency can be increased by pulling a vacuum in the die cavity; however, the unit works well enough with only air relief holes in the die cavity.

The frame is made from two pieces of SAE 1020 cold-finished steel measuring $\frac{5}{8}$" X 2" X 6". The two pieces should be clamped together during drilling to maintain alignment. Four pieces of $\frac{3}{8}$-inch steel pipe are used for the frame spacers. The four spacers must be precisely the same length to prevent distortion of the frame. The top plate, base plate, and four spacers are assembled and secured with four $\frac{3}{8}$" (16 NC) X 5" machine screws.

The bolt assembly is made from a $\frac{5}{8}$"(11 NC) X 3" alloy steel hexagon-head cap screw. The firing pin and firing pin retainer are made from an oil-hardened drill rod and both are heat-treated to 52Rc (Rockwell). If heat-treating facilities are not available, parts 1 and 2 may be made from heat-treated SAE 4140 steel. This material is machinable and tough enough to serve the purpose well. The firing pin retainer also serves as the bolt handle. The die-centering pin at the bottom of the frame is a modified $\frac{3}{8}$" (16 NC) X $\frac{1}{2}$" round-head machine screw and keeps the die centered in the frame.

The explosion chamber is made from 1020 steel. It is important to maintain reasonable concentricity in all machined parts and to leave the cartridge chamber undersize for later reaming by a gunsmith. The die cavity is also made from 1020 steel. The size of the air relief holes is determined by experimentation.

When all parts have been completed and before heat treatment of the firing pin and firing pin retainer (if a drill rod is used), the unit should be assembled, and the assembly should be checked by a qualified gunsmith. In particular he should check the firing pin length, check the head space, and ream the chamber for .22 caliber. The charge for this service varies, but generally is less than the cost of a chambering reamer.

The material to be formed should be cut to 2¼-inch diameter and placed between the explosion chamber and the die. A power load should then be inserted into the chamber, this assembly should be placed in the frame, and the bolt should be turned down securely.

For safety the unit is so designed that the explosion chamber is recessed into a counterbore in the die cavity, and the bolt enters a counterbore in the explosion chamber. It is practically impossible to discharge a power load unless all parts have been securely and properly assembled.

The power load is discharged by striking the firing pin sharply but *lightly* with a small hammer. The expended power load may be extracted with a 6-inch piece of ⅛-inch brazing rod.

Selected References

Note: The numbers in parentheses in this section refer to entries in the list of selected references that appear within this publication immediately after the text.

(13), pp. 436-50; *(16)*, p. 91; *(27)*, pp. 120-31; *(45)*, pp. 1-884; *(61)*, pp. 133-45.

Note: A 60-page book, *High-Energy Rate Forming and Testing*, (No. R-96), can be purchased from the *American Machinist*, Reader's Service Department, 330 West 42nd Street, New York, N.Y. 10036, for $2.00.

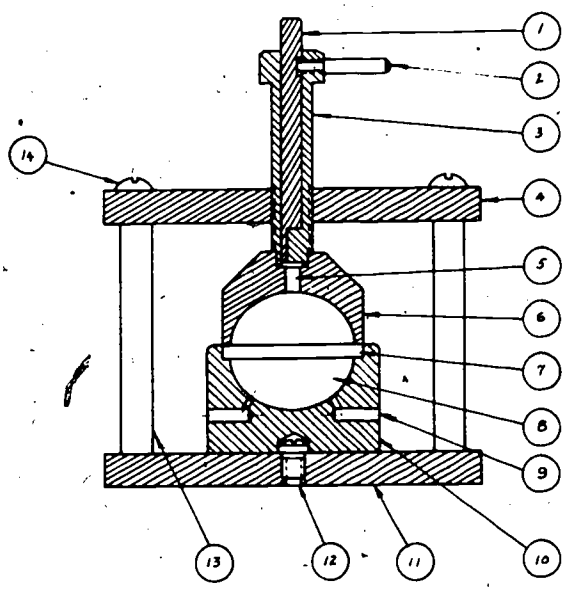

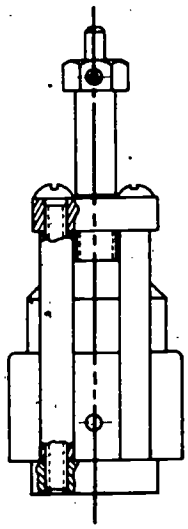

Caution: Place explosive-forming device behind wireglass screen or in-metal or wood container before firing.

NO	PART NAME	REQ	MATERIAL
14	3/8-5 MACHINE SCREW	4	STEEL
13	3/8 DIA PIPE	4	GAL
12	FILLISTER HEAD CAP SCREW	1	STEEL
11	BASE PLATE	1	CF1020
10	LOWER CASING	1	CF1020
9	AIR RELIEF HOLES	2	——
8	DIE CAVITY	—	——
7	MATERIAL TO BE FORMED	—	——
6	UPPER CASING	1	CF 1020
5	FIRING CHAMBER	—	——
4	TOP PLATE	1	CF 1020
3	HEX HEAD CAP SCREW	1	STEEL
2	FIRING PIN RETAINER	1	STEEL
1	FIRING PIN- HEAT TREAT	1	DRILL ROD

EXPLOSIVE-FORMING DEVICE

DESIGNED BY F ACCURSO — SCALE ¾"=1"

DR BY STERLING C LOWE — SHEET 1 of 2

Developed by
Frank P. Accurso, Merritt College
Peralta Junior College District, Oakland

Drawings by
Sterling C. Lowe, Encina High School
San Juan Unified School District, Carmichael

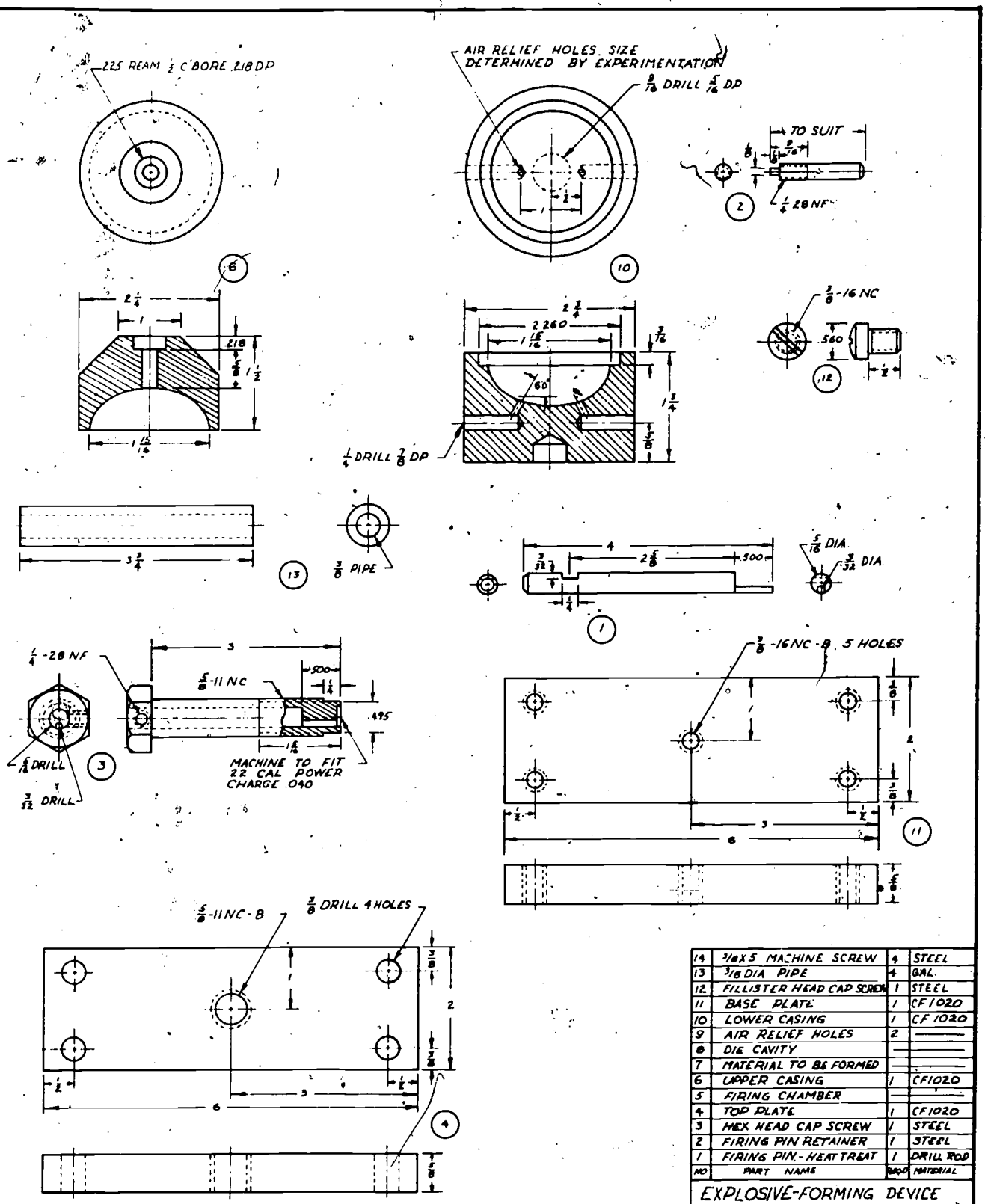

NO	PART NAME	QTY	MATERIAL
14	3/8 X 5 MACHINE SCREW	4	STEEL
13	3/8 DIA PIPE	4	GAL.
12	FILLISTER HEAD CAP SCREW	1	STEEL
11	BASE PLATE	1	CF 1020
10	LOWER CASING	1	CF 1020
9	AIR RELIEF HOLES	2	———
8	DIE CAVITY	—	———
7	MATERIAL TO BE FORMED	—	———
6	UPPER CASING	1	CF1020
5	FIRING CHAMBER	—	———
4	TOP PLATE	1	CF1020
3	HEX HEAD CAP SCREW	1	STEEL
2	FIRING PIN RETAINER	1	STEEL
1	FIRING PIN - HEAT TREAT	1	DRILL ROD

EXPLOSIVE-FORMING DEVICE

DESIGNED BY F. ACCURSO	SCALE - FULL
DR. BY STERLING C. LOWE	SHEET 2 of 2

Unit 13 — POWDER-ACTUATED TOOLS

Among the most interesting of the recently developed tools are powder-actuated tools. These tools use energy from the firing of a powder charge to drive a fastener into concrete or steel. Many attempts were made to use explosive energy for this purpose as early as the turn of the century, but not until 1945 was a method developed that was commercially practical. Today, labor on hundreds of fastening jobs is greatly reduced by powder-actuated tools. This method makes use of a stud-driving tool, a powder charge, and a fastener (stud). Powder-actuated tools have two primary functions. First, they set threaded studs into concrete and steel for fastening removable installations. Second, they drive nail-like studs through materials into concrete and steel for making permanent installations.

Since powder-actuated tools make use of the high-pressure gases developed by the confined burning of powder (nitrocellulose propellant), they are potentially as dangerous as any other form of explosive. However, improvements in these tools since they were first introduced have made them relatively safe to operate as long as the prescribed precautions are observed. Because safety is such an important factor in operating powder-actuated tools, all operators must be certified before they may fire an explosive tool. To obtain a certificate, an operator must pass a written test on the safe operation and care of the tool.

The first safety practice to be observed is to read and understand the instruction manual provided for the particular powder-actuated tool before attempting to operate the tool. These manuals describe the components of the stud-driver, the loading and firing cycle of the tool, the parts list and parts numbers, the use of the extension, the use of the shield, the proper maintenance of the tool, and the particular precautions to be observed. All of the safety precautions presented in a manual are important and must be observed in order to prevent injury to the operator or to a bystander. Certain of these precautions take precedence over others. The general sequence of importance of these precautions is indicated in the safety instructions that follow:

1. Use a positive guide to insure alignment when setting a fastener through a previously prepared hole in steel.
2. Always fire from a fully shielded position as protection against ricochet.
3. Use an extension only when the safety control rod is accurately set to prevent firing at an angle.
4. Make sure before firing that the fastener does not have sufficient power to drive completely through the material.
5. Always set the fastener 3 inches or more from the edge of concrete.
6. Always set the fastener ½ inch or more from the edge of steel.
7. Use only a factory-recommended fixture for any special fastening as described in the manufacturer's instruction manual.
8. Allow at least 30 seconds before removing a tool from the work surface in the event it does not fire; then remove the powder charge and dispose of it safely.
9. Be sure the tool is unloaded when not in use. If an operator decides not to fire the tool, he must unload it.
10. Never fire into cast iron, tile, high carbon steel, or other hard or brittle materials.

Despite the many hundreds of applications performed daily by a powder-actuated tool, there are only a few simple basic rules that govern the system and make it possible for the operator to do good work. These rules are as follows:

1. Know the material to be penetrated. If a common nail can be hammered into the base material, don't use a powder-actuated tool.
2. Select the proper fastener for the job. Consider only the section of the fastener that is to be imbedded under the work surface of the material since the section above the work surface of the material will be determined by application requirements. When selecting a fastener for concrete, choose one that will penetrate into the concrete a minimum distance of eight times the diameter of the shank of the fastener. A light-duty fastener with a shank diameter of $\frac{5}{32}$ inch must penetrate 1 ¼ inches; a heavy-duty fastener with a shank diameter of ¼ inch must penetrate 2 inches. When selecting a fastener for steel, remember that the whole point of the fastener must appear through the reverse side of the steel plate.

3. When selecting a powder charge to set a fastener into either steel or concrete, or when determining how far to insert the stud into the barrel, always use the weakest powder charge or insert the stud a fair distance into the barrel for the first fastening. Learn the color codes some manufacturers have placed on the powder charges, for the different colors designate powder charges of varying intensity. The colors should be memorized for immediate recognition. The power of the charge is indicated by the color of the wads in the mouth of the cartridge case as well as on the box or container in which they are packed.
4. Know the holding power of the fastener. A powder-actuated tool is designed to maintain a balance in the relationship of the power of the cartridge to the length and diameter of the fastener shank. If a fastener is selected within the proper limits – that is, eight diameters into concrete or the whole point through the reverse side of steel – the correct holding powers will generally result.

Scientific Principle Involved: Expansion of Gases

The propelling force of the powder charge (nitrocellulose, the successor to gunpowder/black powder) results from the rapid burning and evolvement of hot gases that exert a sustained forward force or pressure on the missile or projectile. The rapid conversion of the powder charge into hot gases that have a larger volume than the volume of

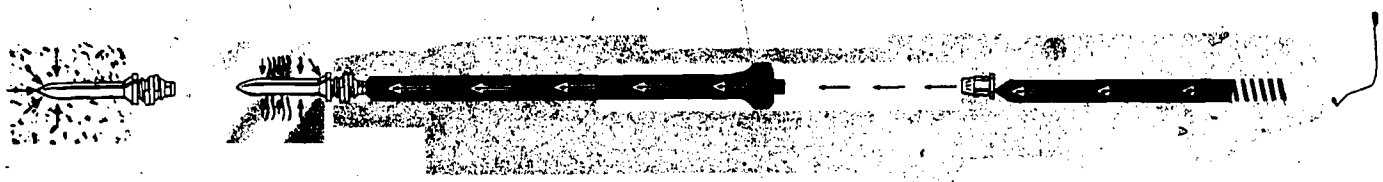

In concrete In steel

The powder-actuated tool (above) utilizes the energy from a power source to set threaded studs or drive pins through materials into concrete or steel (USM Fastener Company, Shelton, Connecticut).

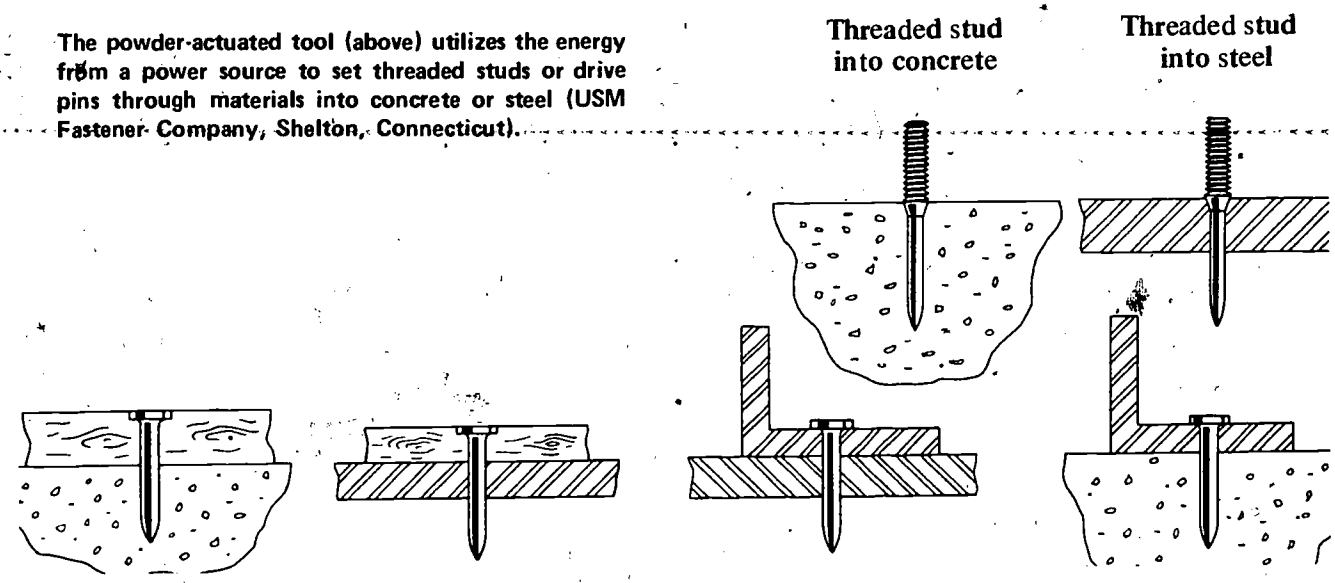

Drive pin through wood into concrete

Drive pin through wood into steel

Drive pin through steel into steel

Drive pin through steel into concrete

the original charge overbalances the restraining pressure of the surrounding matter.

Application of Principle

Since the powder charge and fastener are potentially as dangerous as ammunition, the powder-actuated tool must be operated by a person with an operator's certificate. A qualified teacher, construction worker, or manufacturer's representative should demonstrate the use of this tool. The explosive-forming device (referred to in Unit 12, "High-Energy Rate Forming") can be used to demonstrate the propelling force of a powder charge.

Selected References

Note: The numbers in parentheses in this section refer to entries in the list of selected references that appear within this publication immediately after the text.

(16), p. 91; *(18)*, Article 27; *(27)*, pp. 237-38; *(61)*, pp. 133-45.

Note: Operators' manuals published by the manufacturers of Drive-it, Ramset, and Remington powder-actuated tools can be obtained from local suppliers of industrial equipment and concrete fasteners.

The caseless "power-cap" (right) is used in a newly developed powder-actuated tool to drive pins and studs into concrete and steel. It reduces fastening-cycle time; burns cleaner, with no residue; and eliminates cartridge case ejection. It works as follows (see below): (1) cap in position, firing pin armed; (2) firing pin releases, squeezing cap against anvil; (3) heat transfer begins; and (4) cap is completely consumed, energy is ported through anvil into barrel, activating piston ram (USM Fastener Company, Shelton, Connecticut).

Eight times actual size

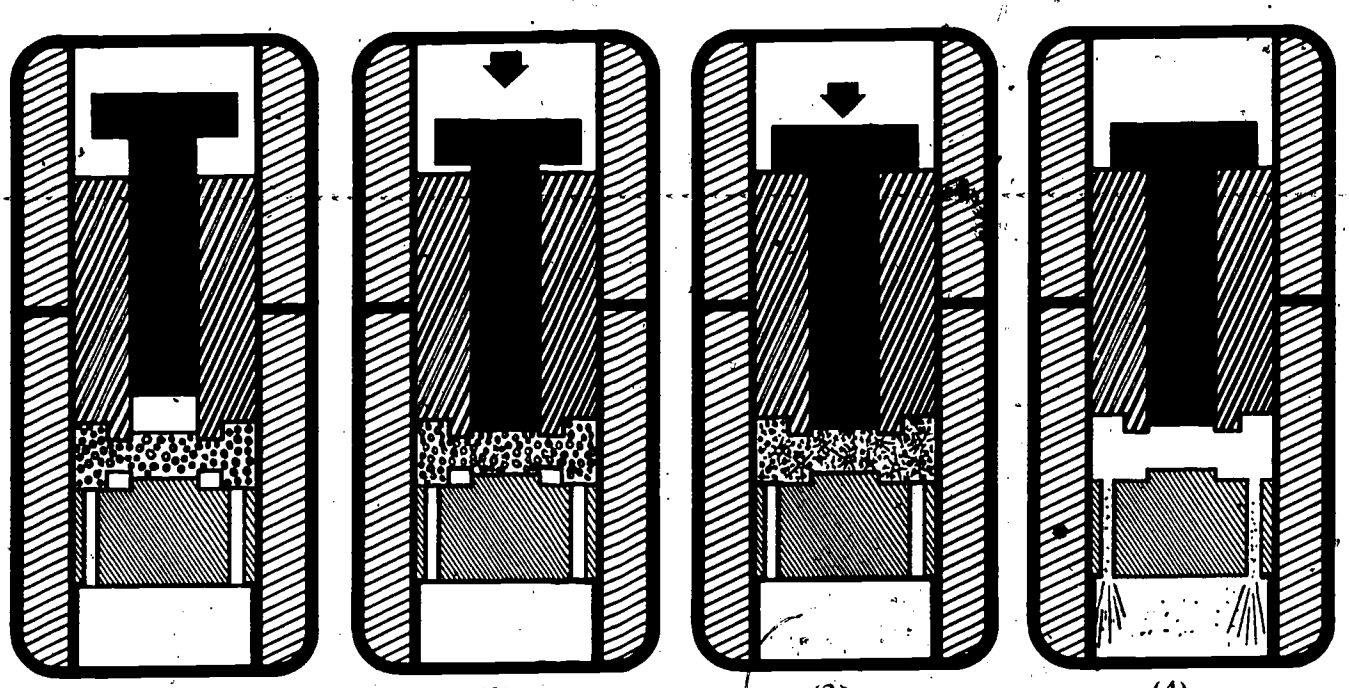

(1) (2) (3) (4)

Unit 14 — JET AND ROCKET ENGINES

Jet and rocket engines are internal-combustion engines. They operate through the application of Newton's third law of motion: *For every action there is an equal and opposite reaction.* Burned gases leave the engines with great force. The opposite reaction is an equal thrust in a forward direction. As a result the jet or rocket engine is pushed (thrust) forward, carrying the plane or rocket with it.

Jet and rocket engines operate identically in relation to Newton's law. However, they differ in the way their fuel is prepared for combustion. A jet engine sucks in air from the atmosphere and mixes it with the fuel for burning. A rocket carries its own air in the form of an oxidizer and operates in space, where there is no atmosphere.

The jet engine is defined further as one which propels itself by the same gases that convert the fuel's thermal energy into mechanical work — turning the air compressor turbine.

There are three types of jet engines using the same basic principles of operation: the turbojet, the turbofan, and the ramjet engines. They are described as follows:

1. The *turbojet or gas turbine engine* is thought of as a "pure" jet engine because it most closely follows the above description. In the turbojet engine, air is brought into the front of the engine by a compressor. The compressor forces the air into the center section of the engine, where fuel is added and ignited. The burning fuel increases the temperature and the pressure in the chamber. The gases, therefore, exert a heavy force in all directions. The compressor prevents the gas from escaping out the front. As the gas escapes out the rear, it drives a turbine. The only function of the turbine is to drive the compressor. As the gases escape out the exhaust, a forward push is given to the engine. This push is called thrust, which is measured in pounds. Thrust is, therefore, the forward push (force) resulting from the pressure in the combustion chamber. In the turboprop engine the combustion gas turns a propeller as well as a compressor. Propulsion power in this case comes from the propeller. The exhausting gas, depleted of most of its energy in operating the prop and the turbine, adds little thrust to the turboprop engine.
2. The *turbofan engine*, one of the most widely used engines, modifies the operation of the

A steam catapult is used to launch a jet aircraft from the USS Coral Sea (U.S. Navy photograph).

turbojet engine. The turbofan engine is able to process greater quantities of air, provide increased thrust, and operate at lower temperatures. This improvement is accomplished by providing a bypass around the combustion chamber for a portion of the incoming air. This air is shunted to the rear of the engine, where it combines with the heated gases. The mixing of the gases makes more efficient use of the available heat, producing greater thrust.

3. The *ramjet engine* does not even use a compressor, has no moving parts, and requires high speed before it can operate; it cannot be started from rest. The forward motion of the engine brings in the air. The shape of the combustion chamber prevents the air already in the chamber from being compressed by the incoming air. Fuel is added and ignited, and thrust is produced in the same manner as in the turbojet engine. The incoming rush of air prevents the forward exhaust of the burned gas. At high speeds the ramjet engine is more efficient and trouble free than the turbojet engine; however, the ramjet engine cannot be used when the plane is standing still or is traveling at slow speeds. Future jet engines may take advantage of both turbojet and ramjet features. A combination engine called a turboramjet engine has been proposed. It would take off and operate as a turbojet engine. When sufficient speed is reached, it would operate as a ramjet.

The rocket engine uses the same principles of operation which control the jet engine. However, it operates independent of air, carrying a supply of both fuel and oxidizer. Since the "reaction principle" of motion does not require atmosphere, the rocket engine operates effectively in space. In operation, oxidizer and fuel are ignited in a combustion chamber. The resulting gases are heated to a very high temperature, producing a high pressure. As the gases escape from the rear of the engine, a strong forward thrust propels the rocket.

The same principle of operation that is applied to the turboprop engines of planes can be applied to gas turbine engines in automobiles. In these engines nearly all of the force of the escaping gas is absorbed by the turbine. The turbine serves a dual function. Part of the energy is used to drive the compressor bringing in the air needed for combustion. However, the larger portion of the energy is used to rotate the airplane propeller when the turboprop engine is used or to rotate the wheels of the automobile when the gas turbine is used.

Scientific Principle Involved: Newton's Laws

Gas confined within a container exerts pressure equally in every direction. As long as the container is sealed, the forces resulting from the pressure are in balance. If the pressure is relieved at any point, however, the force at that point will drop. As a result the force opposite the reduced force will cause movement or apply an unbalanced force in a direction opposite that of the relieved pressure. This same principle can be identified in a different manner: for every action there is an equal and opposite reaction. In the case of gas pressure, relief of the pressure (by opening the chamber at that point, exhausting the gas) produces an opposite and equal reaction. The reaction is a push away from the point at which the pressure is released.

Application of Principle

1. Newton's third law of motion (for every action there is an equal and opposite reaction) can be demonstrated by filling a toy balloon with air and releasing the balloon. The balloon goes forward (reaction) with a force equal and opposite to the force of the escaping air.
2. The principle of jet and rocket propulsion can be taught by constructing a small rocket, using a CO_2 cartridge as the engine. The rocket can be operated on a string on the school grounds. The most important consideration for a good flight is to get a hole punched in the cartridge and the rocket released before much of the CO_2 escapes.
3. The thrust of a CO_2 cartridge can be measured by attaching the cartridge to a bicycle wheel and checking the movement of the wheel with a dynamometer.

Selected References

Note: The numbers in parentheses in this section refer to entries in the list of selected references that appear within this publication immediately after the text.

(1), Volume 5, pp. 918-25, Volume 7, pp. 1237-39, Volume 10, pp. 1859-62; *(7)*, pp. 13-14; *(9)*, pp. 119-20; *(13)*, pp. 192-99, 519; *(22)*, pp. 75-77; *(24)*, pp. 238-43; *(26)*, pp. 233-88; *(37)*, pp. 383-91; *(54)*, pp. 507-14; *(55)*, pp. 81-108.

Unit 15 — GASOLINE TESTING

Two tests used in comparing the power of gasolines are the Full Load Power Test and the Fixed RPM Power Test. The units used in the measurement are foot-pounds of torque (fpt).

A single-cyclinder engine is generally used in testing the power of gasolines. The engine fuel-supply system must be equipped with a quick-change system, which can be made by fitting the fuel line with a glass jar lid in a way that will permit the person performing the test to rapidly interchange jars containing samples of different gasolines.

The engine is equipped with a tachometer, and the load is applied by a dynamometer. Readings of the revolutions per minute (from the tachometer) and foot-pounds of torque (from the dynamometer) are made and recorded for each sample of gasoline for full load power and fixed rpm power.

Directions for performing the tests are as follows:

1. *Full Load Power Test.* Adjust the throttle and dynamometer until maximum readings for both rpm and fpt are observed. Record these readings.
2. *Fixed RPM Power Test.* Adjust the throttle to maintain 2,000 rpm while increasing the load on the engine with the dynamometer. Record the highest fpt reading which can be obtained without dropping below 2,000 rpm.

Today's best gasoline engines reach an efficiency of 25 to 30 percent. Higher efficiency of the engine is obtained by increasing the pressure (compression) of the fuel-air mixture in the cylinder just before it is ignited. However, high compression raises some difficult practical problems, such as making pistons and valves fit perfectly. Also, when the pressure on the gasoline vapor is suddenly increased by the compression of a piston, the gas gets hot. In fact, under high compression the fuel mixture gets hot enough to explode before the spark ignites, causing engines to knock. Chemists have developed a gasoline that can be highly compressed without exploding too soon. High-octane gasoline is highly resistant to knock; low-octane fuel knocks easily. A gasoline is rated by the use of an octane-rating number (ONR). Iso-octane is given a rating of 100 because it is very resistant to knocking. Another fuel, heptane, is given a rating of zero because it knocks easily. A mixture of half iso-octane and half heptane (by volume) has a rating of 50. Iso-octane and heptane are reference fuels used to test and rate unknown fuels.

Scientific Principle Involved: Conversion of Energy

Gasoline (chemical energy) is useful as a fuel for internal-combustion engines because it is easily evaporated and very flammable. A mixture of gasoline vapor and air provided by the carburetor enters the cylinder, the piston moves up to compress it, and an electric spark ignites the compressed mixture. The burning is a fast chemical reaction that produces carbon dioxide (CO_2), water vapor, and a large amount of heat (heat energy). The heat produced expands the CO_2 and water vapor, forcing the piston down. The downward movement of the piston (mechanical energy) turns the crankshaft.

The dynamometer makes use of friction to measure the torque (twisting rotational force) produced by an engine. Force is a push or a pull which tends to produce movement. Friction is the resistance to movement which is observed when two surfaces make contact.

Application of Principle

1. Samples of various grades and brands of gasoline should be given the Full Load Power Test and the Fixed RPM Power Test. The recorded readings should be compared to determine what significant differences of power have been demonstrated, and the various differences in automobile engine design and conditions which affect its fuel requirements should be discussed. Some of the factors which should be in the discussion are compression ratios, carburetors, gasoline octane ratings, spark coils, capacitors, distributor points, spark plugs, and ignition wires. *Note:* Poisonous carbon monoxide is present in the exhaust gases of a running engine. Good ventilation is a "must" to prevent carbon monoxide poisoning whenever an engine is being operated indoors.
2. A fractionating tower can be assembled to distill petroleum. *Note:* It is unsafe to heat petroleum with an open flame above 75 degrees C. Rubber tubes must be connected from the fractionating tower to the collecting bottles. Petroleum warmed to 40 degrees C.

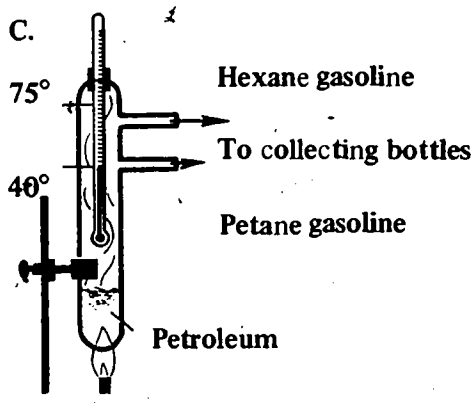

will produce a vapor that when condensed will be pentane gasoline; to 75 degrees C., hexane gasoline.

Selected References

Note: The numbers in parentheses in this section refer to entries in the list of selected references that appear within this publication immediately after the text.

(16), pp. 100-101, 166-67; *(22)*, pp. 49-59, 165-77; *(69)*, Chapter 6, pp. 1-38; *(75)*, Chapter 20, pp. 1-8.

Unit 16 — CARBURETION

Most American internal-combustion engines use gasoline as fuel. Gasoline is obtained from petroleum and is composed primarily of hydrogen and carbon compounds. By the mixture of correct amounts of gasoline and air and the ignition of this mixture in an engine, power is produced to drive a vehicle. The mixing of gasoline and air in controlled amounts is known as carburetion. The device on automobiles and other units driven by internal-combustion engines that performs this function is called a carburetor. The carburetor performs several specialized functions. The names and brief descriptions of these functions are as follows:

1. *Float circuit.* The major function of the float circuit is to keep the bowl filled with gasoline. As the level of gasoline approaches full, the float rises and cuts off the ingress feed; when the float drops, the valve is opened, allowing the ingress feed to open.
2. *Idle and low-speed circuit.* This circuit operates when the throttle is closed or nearly closed. At this time only a small amount of air can flow through the carburetor air horn (air intake), causing a limited mixture to be supplied to the engine.
3. *High-speed, part-load circuit.* As the throttle is opened for high speed, it moves past the low-speed port in the carburetor and allows air to pass the air horn in a sufficient quantity to furnish a mixture adequate for the demanding conditions.
4. *High-speed, full-power circuit.* This circuit is designed to do what its title suggests. The mixture supplied is satisfactory for engine operation from partly open to nearly wide-open throttle. When the throttle is opened wide, a metering rod and jet assembly allow more gasoline to pass a point and provide an enriched mixture.
5. *Accelerating pump circuit.* This circuit carries the engine through the closed throttle to open-throttle transition period. The transition period is ofter referred to as a "flat spot" in engine performance.
6. *Choke circuit.* This circuit is designed to cause the carburetor to deliver great amounts of fuel for starting when the engine is cold. The circuit can be controlled electrically, thermostatically, or manually.

A great deal of air passes through the carburetor and engine. Air is likely to contain a great amount of dust and grit. These impurities, if they entered the engine, could cause serious engine damage. All air entering the engine through the carburetor must first pass through an air cleaner. Air cleaners contain filter material (fine-mesh metal threads or ribbons, special paper, cellulose fiber, or polyurethane) or oil reservoirs to remove dust and grit from the incoming air.

Scientific Principle Involved: Bernoulli's Principle

When a fluid is undergoing a change in velocity, the pressure, measured at right angles to the direction of flow, is lowest at the point of highest velocity. A venturi is built in the air tube leading to the jets in a carburetor. The air moves through the venturi, causing a low pressure as it reaches the area of the tube, where the diameter is less

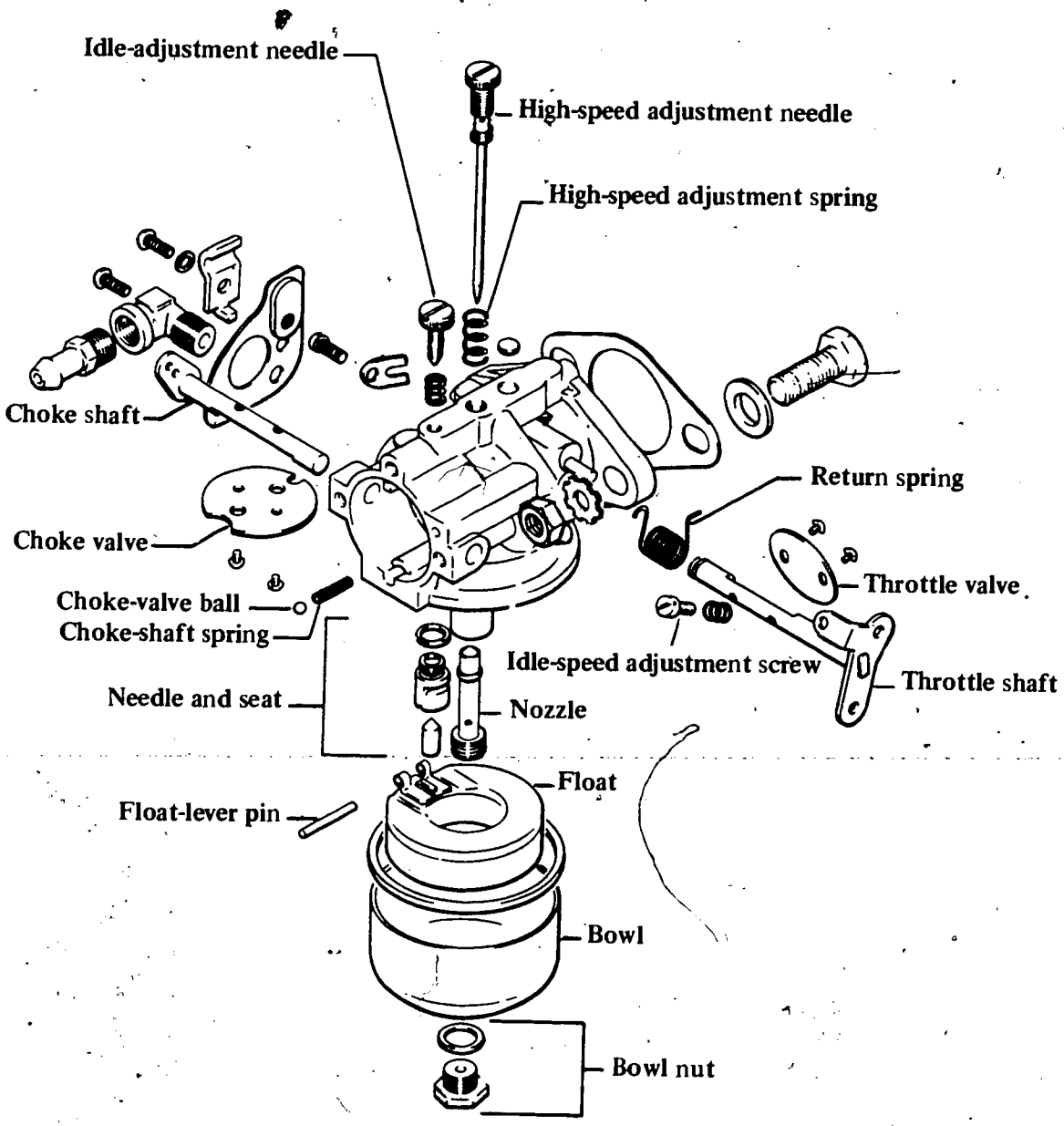

The illustration presented above gives an exploded view of the carburetor used in the three-wheel Cushman truckster and haulster (Cushman Motors, Lincoln, Nebraska).

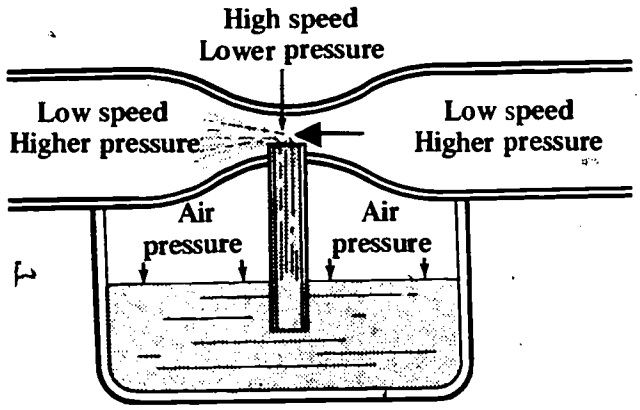

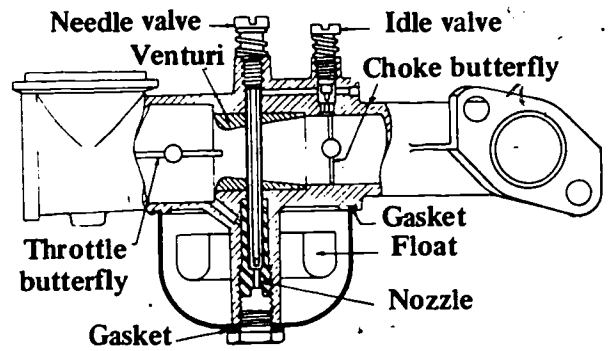

The venturi (left) is a constricted tube which causes the velocity of the air to increase and the pressure to decrease. A carburetor (right) illustrates the use of the venturi (Briggs & Stratton Corp., Milwaukee, Wisconsin).

(constricted). The air pressure in the liquid container (bowl) forces the gas to flow into the tube and mix with the air, where it becomes atomized.

Application of Principle

1. Small, single-cylinder engines lend themselves well to experimentation involving the degree of combustion efficiency and its effect on the engine's operating conditions. Students can vary (a) the throttle-valve setting; (b) the choke-valve setting; and (c) the mixture setting. They can then observe the results in smoothness of operation speed and the quantity and color of exhaust smoke.
2. Students can construct a miniature wind tunnel to measure static and dynamic pressures in the venturi.

Selected References

Note: The numbers in parentheses in this section refer to entries in the list of selected references that appear within this publication immediately after the text.

(20), pp. 244-57; *(22)*, pp. 127-71; *(27)*, pp. 224-25; *(36)*, pp. 113-16; *(69)*, Chapter 6, pp. 1-40; *(75)*, Chapter 21, pp. 1-16; *(78)*, pp. 193-214.

Unit 17 — TWO- AND FOUR-CYCLE ENGINES

The source of power for internal-combustion, reciprocating engines is heat-formed by the burning of a combustible mixture of petroleum products and air. In a reciprocating engine this burning takes place in one or more closed cylinders, each containing a piston. Expansion resulting from the heat of combustion applies pressure on the piston. This pressure forces the piston down, turning a shaft by means of a crank and a connecting rod.

In the gasoline engine the fuel is ignited by a spark; in the diesel engine, by the heat of compression. The series of events that takes place to run the engine may occur in one revolution of the crankshaft (two-stroke cycle) or in two revolutions of the crankshaft (four-stroke cycle). The operating cycle consists of the following parts:

1. *Intake.* The mixture of fuel and air is drawn or forced into the cylinder by reducing the cylinder pressure to less than atmospheric pressure or by applying an initial, higher pressure to the fuel charge.
2. *Compression.* The mixture is reduced in volume, or compressed.
3. *Power.* The mixture is ignited by a timed electric spark (gasoline engine) or by the heat of compression (diesel engine). The burning fuel-air mixture expands, forcing the piston down and thus converting the generated chemical energy into mechanical energy.
4. *Exhaust.* The burned gases are exhausted from the cylinder so that a new cycle can begin.

The diesel engine differs from the gasoline engine in that in the diesel engine air alone is drawn into the cylinder during the intake stroke and is then compressed to a much higher degree.

The air is heated by compression. Instead of an electric spark, a finely atomized charge of fuel is injected into the combustion chamber, where it combines with the heated air, causing ignition. The power and exhaust strokes are almost identical to those of the gasoline engine.

Each movement of the piston from top dead center (TDC) to bottom dead center (BDC) is referred to as a stroke. Thus, for every two strokes of the piston, the crankshaft makes one complete revolution, meaning that there will be two revolutions of the crankshaft for each complete four-stroke cycle (intake, compression, power, and exhaust). For the purpose of intake and exhaust, valves are installed in the combustion chamber. The opening and closing of the valves must be synchronized with the movement of the piston on appropriate strokes.

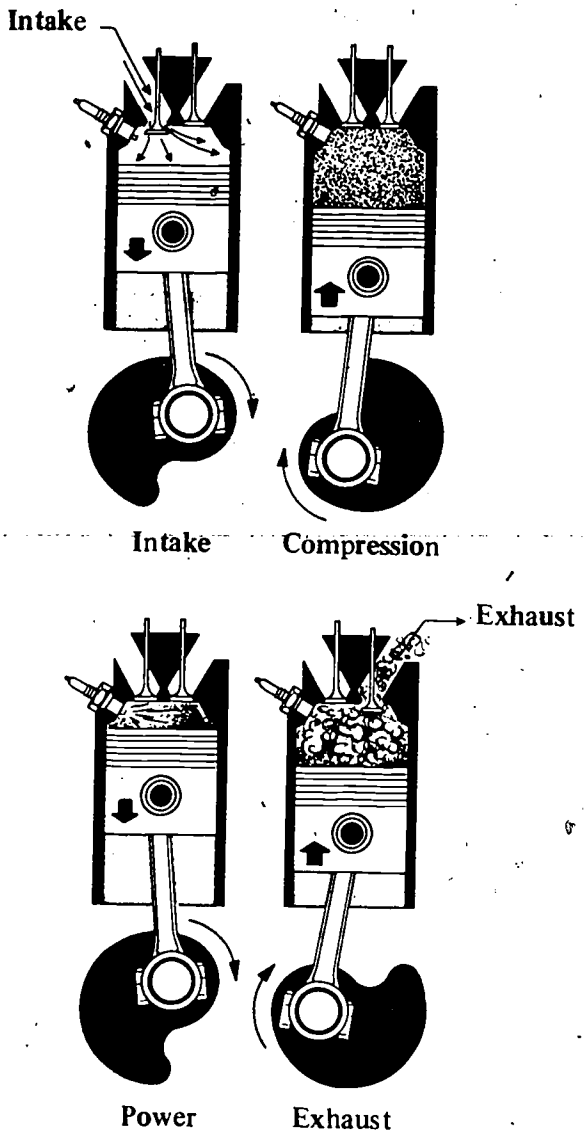

The four-stroke cycle of an internal-combustion engine takes two revolutions of the crankshaft.

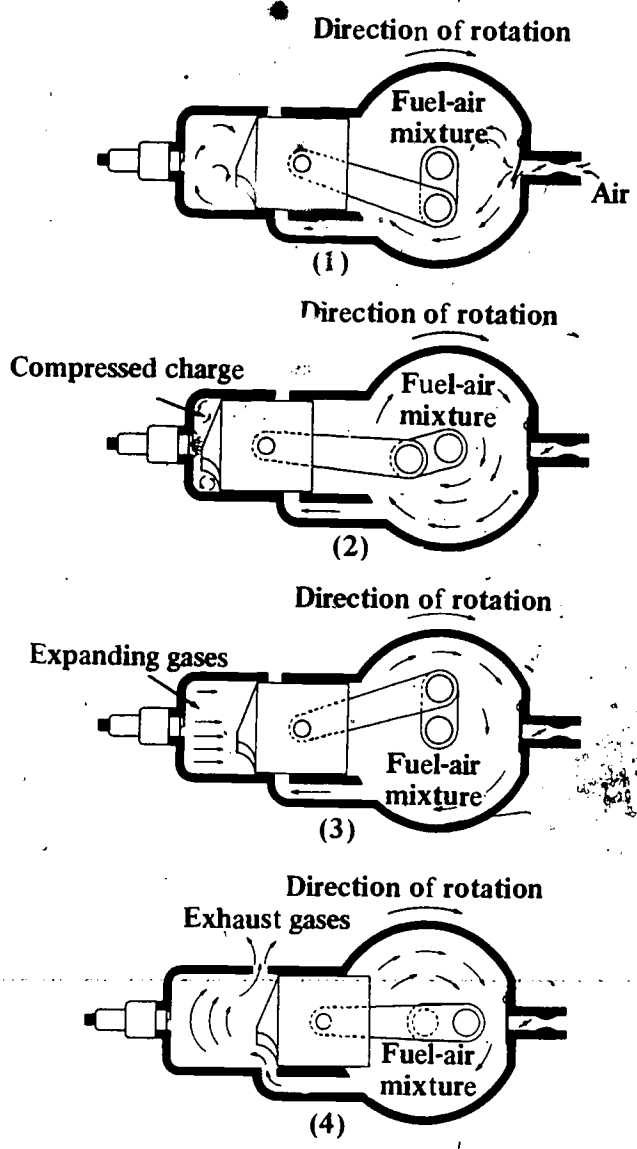

The two-stroke cycle of an internal-combustion engine takes one revolution of the crankshaft.

In a two-stroke-cycle engine, the four events take place in two strokes of the piston or one revolution of the crankshaft. Thus, a compressed fuel charge is fired each time a piston reaches TDC; each downward stroke is a power stroke. The incoming fuel-air mixture must be somewhat higher in pressure than the lowest pressure existing in the cylinder. The piston is used as an air pump

for this purpose; the engines are called "crankcase-scavenged."

Scientific Principle Involved: Expansion of Gases

A very important principle in the operation of the two- or four- cycle engine is the expansion of gases or the conversion of chemical energy to heat energy to mechanical energy. Energy is defined as the capacity to do work. The energy is stored in the molecules of gasoline. When the fuel is ignited, energy is released and produces heat, which increases the pressure of the gases above the piston. The piston is pushed down in the cylinder. The downward movement of the piston turns the crankshaft.

Application of Principle

1. Have students do as follows:
   a. Disassemble and assemble two- and four-cycle engines.
   b. Draw on engine schematics (provided by teacher) the flow of air-fuel and exhaust on each of the engine types.
   c. Identify valves, ports, pistons, rods, and other internal parts.
   d. Determine the firing order of an engine.
   e. Find the compression ratio of an engine by using actual measurements.
   f. Determine engine displacement by measuring the bore and stroke.
2. Calculate actual pressure on the top of a piston as a result of the expanding gases.

Selected References

Note: The numbers in parentheses in this section refer to entries in the list of selected references that appear within this publication immediately after the text.

(4), pp. 27-29; *(13)*, pp. 464-66; *(22)*, pp. 38-48; *(26)*, pp. 113-18; *(27)*, pp. 271-72; *(36)*, pp. 19-20; *(56)*, pp. 3-12; *(66)*, pp. 17-19; *(67)*, pp. 17-20; *(69)*, Chapter 1, pp. 7-22; *(72)*, pp. 4-31; *(75)*, Chapter 4, pp. 1-12.

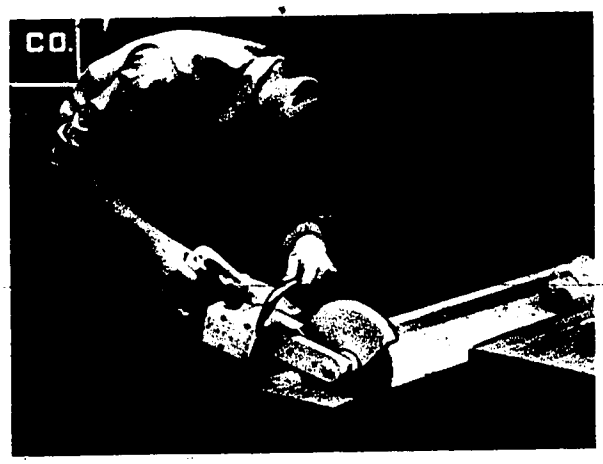

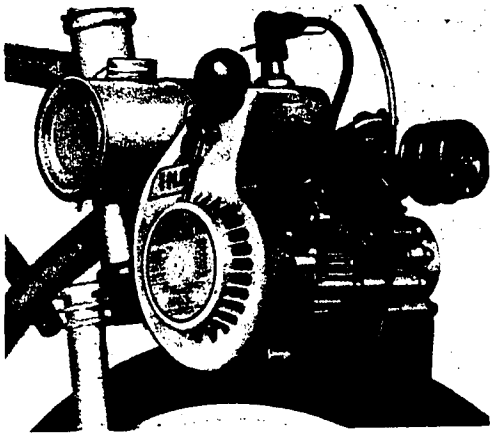

Single-cylinder, air-cooled, two-cycle engines are used to power a saw, pump, bicycle, and spray-gun compressor (Orline Products, Los Angeles, California).

Unit 18 — WANKEL ENGINES

The recently developed Wankel internal-combustion engine is relatively small, lightweight, and inexpensive to manufacture. It is extremely versatile: there is almost no limit on compression ratio, maximum revolutions per minute, type of fuel feed, and method of cooling. The Wankel engine is capable of running at high speeds for long periods of time. It is very successful in cutting down friction by a reduction in the number of moving parts.

As the rotor "piston" of the Wankel engine turns, it forms chambers between the three sides of the rotor and the wall of the housing. The shape, size, and position of the chambers are constantly being altered by the rotor's rotation. Cycles of intake, compression, power, and exhaust are going on simultaneously around the rotor when the engine is running. There are three power impulses for each rotor revolution.

As the rotor opens the intake port, which has no speed-restricting valve mechanism, the fuel-air mixture is drawn in. The rotor continues turning, closing the intake port by passing beyond it. Then the compression begins, followed by ignition, combustion, and expansion for the power stroke until the exhaust port is uncovered. The exhaust cycle then takes place, again with no speed-restricting valve mechanism. The entire operation cycle is thus completed.

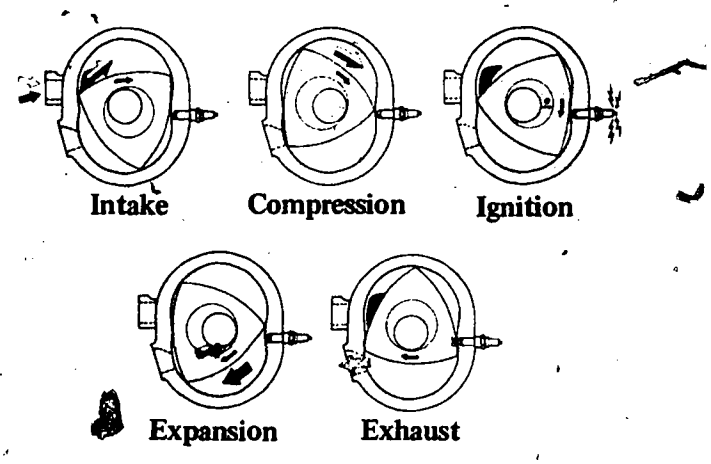

During the combustion cycle the rotor of the Wankel engine turns and forms chambers between the three sides of the rotor and the wall of the housing (Curtiss-Wright Corp.).

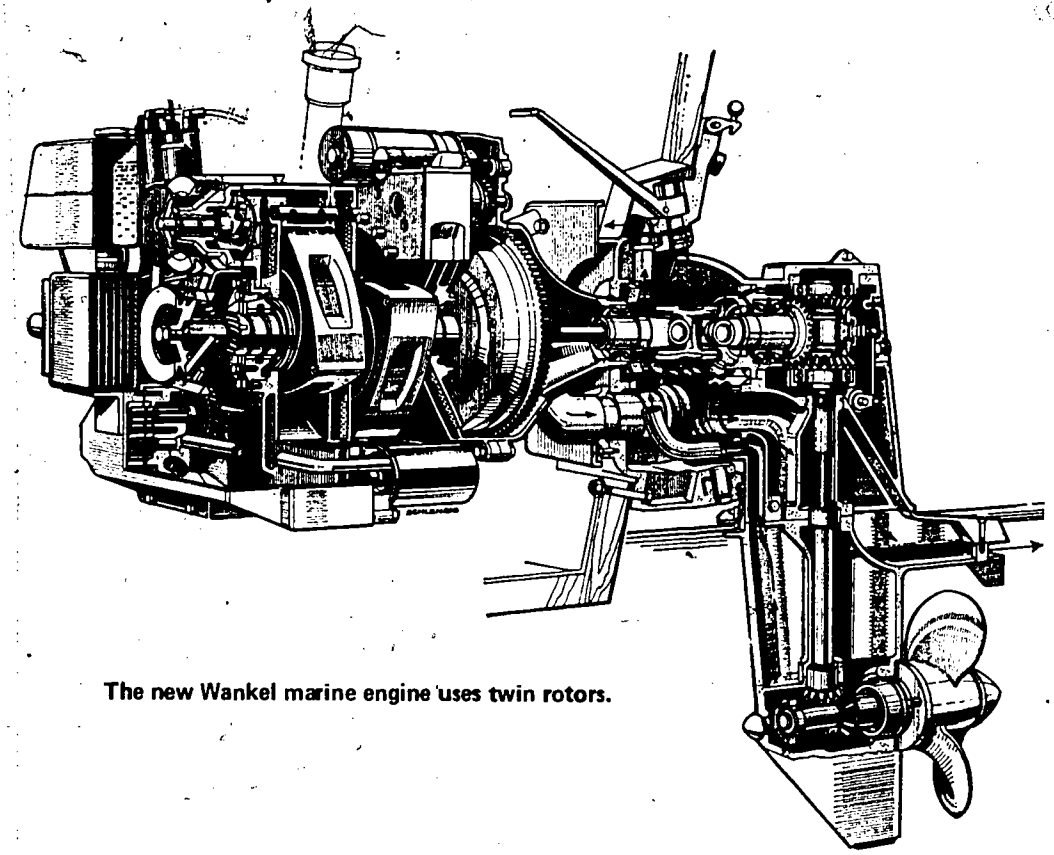

The new Wankel marine engine uses twin rotors.

Scientific Principle Involved: Movement of Inertia

A body continues in its state of rest or uniform motion unless an unbalanced force acts on it (Newton's first law of motion). A wheel mounted on an axle will not start to rotate unless a torque is applied to the wheel. A wheel which is spinning will continue to spin at constant angular velocity unless a torque acts on it. In both cases the wheel is in equilibrium. Thus, Newton's first law of motion also applies to rotary motion.

A rotating flywheel helps maintain a constant angular velocity of the crankshaft of a Wankel or conventional internal-combustion engine. The moment of inertia of a flywheel is large. Torques acting on it do not produce rapid changes in its angular momentum. As the torque from the combustion in each chamber or cylinder tends to accelerate the crankshaft, the flywheel provides a torque which resists this action. But as the torques from each chamber or cylinder where compression is occurring tend to decelerate the crankshaft, the flywheel provides a torque which resists this action also. The flywheel tends to maintain a uniform rate of crankshaft rotation.

Application of Principle

The Wankel engine, which has not been adopted for use in any American vehicle, is being used in NSU sports cars and marine engines manufactured in Germany. Several companies have been licensed to manufacture the engine, including Curtiss-Wright in the United States, Daimler-Benz and others in Germany, Perkins in England, and Kogyo in Japan. Most of these companies will provide drawings and photographs on request.

Selected References

Note: The numbers in parentheses in this section refer to entries in the list of selected references that appear within this publication immediately after the text.

(22), pp. 78-80; *(26)*, pp. 209-12; *(27)*, pp. 88-89, 108-9; *(46)*, p.86.

Unit 19 — THERMOSTATS

A thermostat is a device that is used to control temperature. It responds directly to a change in temperature and is usually set so that it maintains a desired temperature level. Most thermostats are used to open or close electrical circuits or to control the flow of liquids or gases.

Thermostats are used in the home to control the temperatures of heating systems, air conditioners, refrigerators, electric irons, stove ovens, and electric blankets. In the automobile a thermostat restricts the flow of the coolant in the radiator until the correct temperature of the engine is reached. The automobile heater, as well as the refrigeration system, uses the thermostat as a temperature-control device.

One of the most common thermostats uses a bimetallic strip that operates on the expansion and contraction of two different metals. When the temperature changes, the two metals expand or contract unequally. This causes the bimetallic strip to bend in the form of an arc. The bending of the strip can be used to open or close a circuit.

In a home-heating system the thermostat is set to open or close the circuit controlling the valve that turns the heater on or off at the desired temperature. A similar unit is used in the electric iron so that the circuit is broken and the iron is shut off when the proper temperature is reached. If the iron becomes too cool, the thermostat closes the electrical circuit and the iron heats up again.

In the automobile engine the thermostat is placed in the top of the block to close off the flow of coolant when the engine is cold. This closure causes the engine to reach operating temperature more quickly. The thermostat operates a valve so that, when the engine warms the coolant to the set temperature of the thermostat, the valve opens to permit normal circulation. Coolant thermostats are of various types which normally use the expansion of a liquid or wax to control the engine temperature. One type, called a bellows thermostat, contains a liquid that evaporates with increasing temperature and causes the pressure inside the bellows to expand and push the valve open. Another type, called a butterfly thermostat, uses a wax pellet, which also expands with increasing temperature to open the valve to permit the coolant to flow through the radiator.

Scientific Principle Involved: Thermal Expansion

Heat is the kinetic energy of randomly moving molecules. Adding heat to a substance causes the molecules to move more rapidly and produce a greater tendency for the molecules to overcome their mutual attracting forces and to move farther apart. Different solids have individual rates of expansion and different melting points because they are composed of unrelated molecules which are bonded together in different ways. Liquids also have various expansion rates and boiling points; but liquids in general expand more than solids under the same changes in temperature since liquid molecules move more freely. The molecules of gases are so far apart and free to move that the thermal expansion rates for gases are many times greater than those for liquids or solids.

Thermostatic controls in the form of spiral springs, such as those used to actuate the heat-riser valve in the automobile exhaust system, depend on the expansion of the metal in the coil to relax the tension of the spring.

Since brass expands about twice as much as steel, bimetallic bars made of these inexpensive metals, bonded together, make sensitive thermostatic controls which can also conduct electricity and withstand high temperatures.

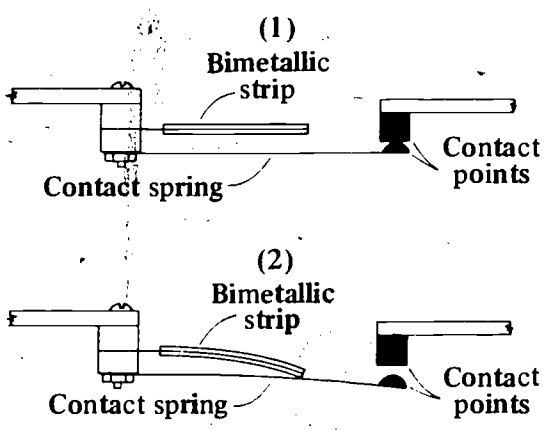

The two different metals in the thermostat expand unequally when the temperature rises, causing the closed contact points (1) to open (2).

Thermostatic controls which operate on the principle of thermal expansion of liquids and gases are generally more sensitive than those dependent on solids because of their high expansion rates. Gases and vapors are particularly useful in thermostats because their molecules, which are uniformly distributed, exert their pressure equally in all directions to all parts of the sealed container.

Application of Principle

1. Secure one or more thermostats from automobiles, a container for boiling water, a thermometer, and a heat source. Suspend the thermostat and thermometer in the container of water and increase the temperature of the water. Note the action of the thermostat as the temperature of the water approaches the temperature stamped on the thermostat. Record the temperature at which the thermostat begins to open, continue to observe the action of the thermostat, and record the temperature at which it is fully open. Discuss the thermostat as a means of control in the cooling system of the internal-combustion engine.
2. Conduct the same type of experiment by using the spiral spring found on the heat riser in the exhaust system of the automotive-type internal-combustion engine. Note that the application of heat to this spring will cause it to actuate the control valve, an action that can be readily observed when heating the spiral spring in the automatic choke on a carburetor. Observe that when heat is applied to this spring, the choke valve moves from the closed to the open position.
3. Note other applications of thermostats in electric irons, circuit breakers, and many other heat-controlled appliances. Obtain the thermostat from an electric iron or a circuit breaker from an automobile electrical system and either connect these units into an electrical circuit with a sufficient load to actuate them or apply heat directly and observe their action.

Selected References

Note: The numbers in parentheses in this section refer to entries in the list of selected references that appear within this publication immediately after the text.

(22), pp. 194-95, 349; *(26)*, pp. 146-47; *(27)*, pp. 233-38; *(46)*, pp. 211-12; *(47)*, pp. 267-71; *(66)*, p. 47; *(69)*, Chapter 4, pp. 9-11.

Unit 20 — WELDING PROCESSES

Welding is the process of joining metal parts by directing heat to melt and fuse parts together. When heat alone is used, the operation is called fusion welding. In some welding processes pressure is used to help join the metals. Many welds require that extra metal be added to the weld by melting a metal rod into the molten puddle.

Industry uses welding to fasten parts together permanently and to make repairs on broken equipment. Many buildings, bridges, and ships are fabricated by welding. The automobile has parts that are welded together; in "tooling up" for an automobile, the manufacturer spends considerable time in arranging for special welding equipment to fabricate many of its parts. As a means of fabrication, welding has proven fast, dependable, and flexible. It has made possible the simplification of design and the elimination of costly machining processes. The three most common methods of welding are gas, arc, and resistance welding.

Gas welding is accomplished by mixing oxygen and acetylene in the body of a welding torch and then lighting the gaseous mixture at the tip. The oxygen-acetylene flame produces a temperature of 6,300 degrees F. After properly adjusting the flame, the welder heats the metal part by holding the flame near the metal until a molten puddle forms. Then he applies the welding rod to build up the weld. One of the advantages of gas-welding equipment is that through the use of a special torch the flame can be used to cut metals.

In arc welding the electric power comes from either an electric generator or a transformer. One cable from the source of power is connected to the metal objects to be welded, and the other is connected to the holder that clamps the electrode. The welder strikes an arc by touching the metal part to be welded with the electrode. The arc produces a temperature of about 9,000 degrees F. The operator feeds the electrode into the joint, forming a bead as it is moved along the surface.

Spot welding, which is usually a method of resistance welding, is employed a great deal in industry to join sheet-metal parts. The pieces of metal are placed together and clamped under pressure between the tips of two electrodes. A large amount of current passes between the electrodes and fuses the metal pieces together at the point where the current passes through the metal.

Brazing, involving the use of gas-welding equipment, is not considered a method of welding. It is called hard soldering since the piece to be brazed is not melted. Instead, the brazing rod is melted into the edges of the pieces to be joined. This process is used in repairing broken parts because there is very little danger that any of the original parts will be damaged.

Safety Instructions

1. Obtain permission from your teacher before using welding equipment.
2. Make sure you have ample ventilation.
3. Be sure that you wear welding goggles while using oxygen-acetylene welding equipment. All assistants and observers must also wear welding goggles.
4. Wear a helmet with a proper observation window, a pair of treated gauntlet gloves, and a treated leather apron while using electric welding equipment. All assistants and observers must also wear this equipment.
5. Keep your sleeves and pants cuffs rolled down and wear a leather jacket while using electric welding equipment.
6. Make sure that welding equipment is working properly and that it is used correctly.

Scientific Principle Involved: Kinetic Molecular Theory

Heat is the kinetic energy of moving molecules. Chemical energy released on the burning of acetylene in the oxyacetylene torch is the source of energy used in gas welding. In the electrical-arc weld, the heat energy is produced by the acceleration of electrons and ions in the electrical field; in the resistance weld the heat is due to the resistance to the movement of electrons in the metal. The purpose of using heat in welding is to increase the temperature of the metals to the point where the kinetic energies of the molecules and atoms of the metals are sufficient to break the bonds which hold these particles together in the crystalline structure of the solid. When these bonds are broken, the metal fuses and the particles move more freely in the liquid state. On cooling, the particles lose kinetic energy and resume relatively fixed positions in the solid state. When these effects occur on the local heating of pieces of metal held closely together, as in spot or seam welding, the result is a strong, solid bond without the addition of more metal. Addition of molten metal, such as in gas and arc welding, allows bonds to form between the

added metal and the fused metal from the surface being welded. The molten metal flows into small spaces between the metal surfaces by capillary action caused by intermolecular forces of cohesion.

In brazing, a different metal with a lower melting point is used as the bonding material. The metals to be brazed are preheated (but not to the melting point) in order to increase the molecular motion, which promotes better penetration of the molecules of the solid metal surfaces by the molecules of the molten metal. The bonds in solids between unlike molecules (adhesion) can be as strong as or stronger than the bonds between like molecules (cohesion). The molten metal used in brazing flows into the small spacing between the metal pieces by capillary action, which is due both to the strong attraction (adhesion) between the molten metal and the solid metal surface and to the high surface tension (cohesion) of the molten metal.

Application of Principle

1. The most effective approach to the application of welding and brazing is to learn the basic technical information and acquire the skills involved in the welding and brazing process.
2. A demonstration of both the gas- and arc-welding processes should include the setup and adjustments necessary for each particular welding operation.
3. An aid which will allow the development of the necessary manipulative skills without the actual use of electrodes, welding or brazing rods, or oxygen and acetylene is a 1-inch dowel or stick approximately 14 to 16 inches in length. A hole is drilled in which an ordinary graphite pencil will fit snugly. The hole should be at an angle which approximates the position of the welding torch or electrode. By an adjustment of the length of the pencil to correspond to either a torch or an electrode, the basic patterns and strokes may be practiced on a piece of paper.

Selected References

Note: The numbers in parentheses in this section refer to entries in the list of selected references that appear within this publication immediately after the text.

(34), pp. 27-41, 237-51; *(47)*, pp. 276-79, 342; *(87)*, pp. 30-33.

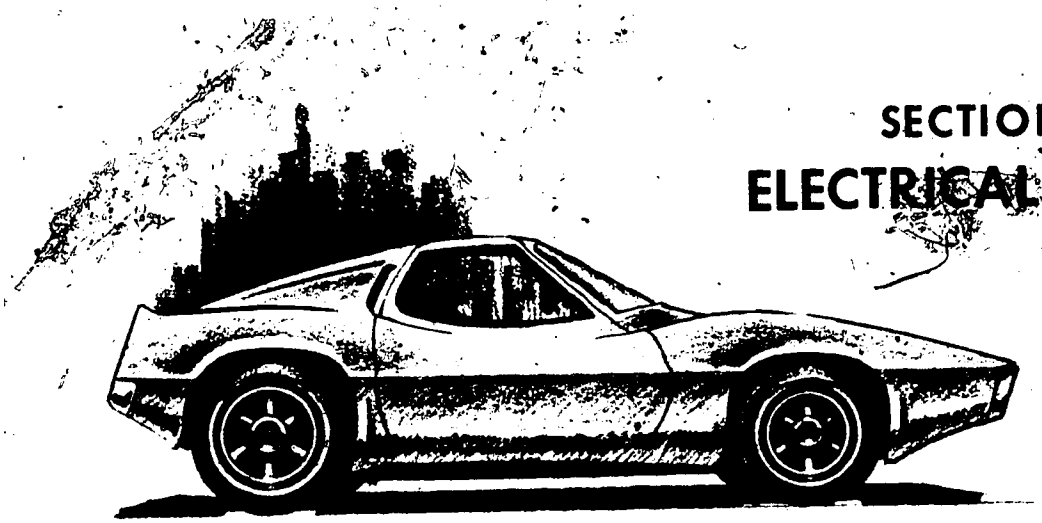

SECTION V
ELECTRICAL POWER

Unit 21 — DRY CELLS: PRIMARY CELLS

One of the most common sources of electrochemical energy is the dry cell (primary cell). Electrical devices such as flashlights, portable radios, and warning flashers on the highways are usually powered by dry cells, which are convenient and flexible power suppliers. Regardless of size a zinc-carbon single dry cell produces 1.5 volts of direct current (DC). The cell is most often made from (1) zinc, which is one of the electrodes and serves as the shell or container; (2) a carbon rod, which is the other electrode and extends through the center of the cell; and (3) an ammonium chloride paste, which is the electrolyte. The top of the cell is sealed to prevent evaporation of the moisture in the electrolyte, and the zinc shell is usually encased in steel or heavy paper. Proper care and intermittent use extends the life of this source of electrical energy.

In recent years the dry cell has been improved. One of these improvements is the so-called mercury cell. The negative electrode of this cell is made of an amalgam of powdered zinc and mercury, pressed into shape. The depolarizer is composed of mercuric oxide and graphite powder. The zinc-mercury amalgam cuts down local action, and the graphite helps reduce the internal resistance of the cell. Mercury cells have a considerably longer life than the ordinary zinc-carbon-ammonium chloride dry cell.

Scientific Principle Involved: Conversion of Energy

The dry cell produces an electric current by converting chemical energy into electrical energy. The conventional dry cell consists of a negative electrode (zinc case) and a positive electrode (carbon rod). Electrons must pass from the negative to the positive electrode (external circuit) before electrical energy is produced. A chemical substance (ammonium chloride) in the zinc container reacts with the zinc, forming zinc ions and liberating electrons. This reaction is very slight until the positive and negative electrodes are connected together in a circuit. When the circuit has been completed, the chemical reaction increases, and the electrons steadily move from the negative to the positive electrode through the external circuit. At this time hydrogen bubbles attempt to form a coating on the carbon electrode. Another chemical (manganese dioxide) is provided to dispose of these hydrogen bubbles in order that the chemical reaction may continue. The movement of electrons will continue until most of the zinc is consumed by the reaction.

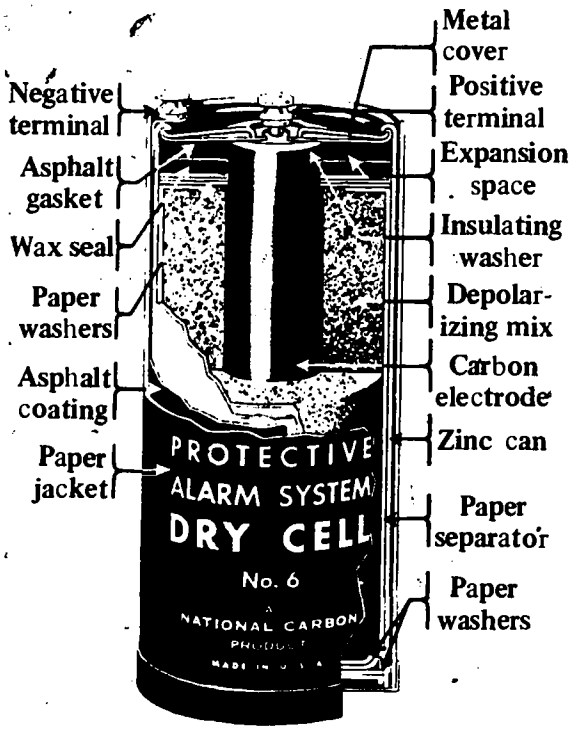

A cross-sectional view of a zinc-carbon-ammonium chloride dry cell shows the components (National Carbon Company, Inc.).

Application of Principle

1. Fresh dry cells and cells that are in various states of deterioration can be given an approximate test by connecting them in a circuit with a 1.5-volt light bulb and observing the intensity of the light. A more accurate test can be made with a battery tester which measures volts and amperes. Zinc-carbon cells, regardless of their size, deliver 1.5 volts. However, larger cells deliver more current. A fresh No. 6 dry cell delivers about 25 amperes, a penlight cell about three amperes. The ammeter test should be made only when necessary, and then as quickly as possible, because the drain of the current reduces the life of the cell. *Note:* Deteriorated cells are likely to expand or leak. They should be removed from flashlights and other devices. When dry-cell-powered equipment is stored, the batteries should be removed. A dry cell should be put into use before the expiration date that is stamped on the label.
2. The chemical action of a supposedly dead cell may be restored temporarily by punching a number of holes in the case and letting it stand in water for a short time. However, cells restored in this manner are of little practical use because they are only partially restored, their life is short, and they leak.
3. Dry cells in various states of deterioration may be displayed, attention being directed to swelling, perforation of the container, and corrosion. Cells may be cut in half to show their internal structure.

Selected References

Note: The numbers in parentheses in this section refer to entries in the list of selected references that appear within this publication immediately after the text.

(13), pp. 481-82; *(14)*, pp. 212-14; *(26)*, pp. 292, 297; *(27)*, pp. 458, 461, 465-66; *(36)*, p. 50; *(47)*, pp. 228-30; *(49)*, Volume 3, 276-79; *(54)*, pp. 331-32; *(65)*, pp. 41-42; *(66)*, pp. 155-56; *(86)*, pp. 40-41.

Unit 22 — STORAGE BATTERIES: SECONDARY CELLS

The storage battery is an electrochemical device for converting chemical energy into electrical energy. It consists of a number of storage cells connected in series. A storage cell is a secondary or voltaic cell that can be restored or recharged repeatedly. Storage cells of three types are now in general use: the lead-acid cell, the Edison cell, and the nickel-cadmium cell. The lead-acid storage cell, used in the batteries of automobiles, airplanes, trucks, motorcycles, and other equipment requiring a portable source of electrical energy, is by far the most widely used type. The electromotive force (emf) of each lead-acid cell is approximately 2.2 volts.

Lead-Acid Battery

Active materials within the lead-acid battery react chemically to produce direct current (DC) whenever lights, radio, starting (cranking) motor, or other current-consuming devices are connected to the battery circuit. This current is produced by the chemical reaction between the active materials of the plates and the sulfuric acid of the electrolyte.

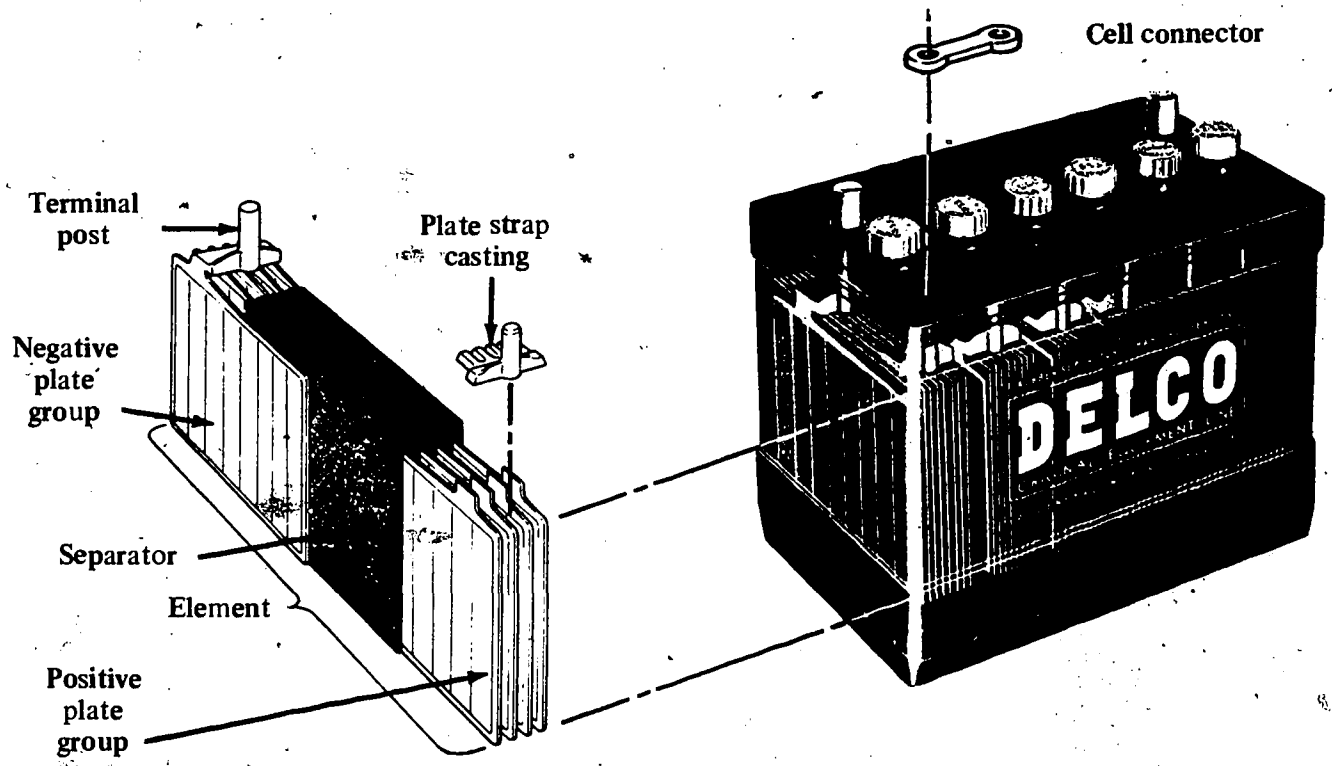

An interior-construction view of a typical 12-volt lead-acid storage battery illustrates internal cell connections (Delco-Remy Division, General Motors Corp.).

The battery performs three functions in automotive applications. First, it supplies electrical energy for the starting motor and for the ignition system as the engine is started. Second, it intermittently supplies current for the lights, radio, heater, and other accessories when the electrical demands of these devices exceed the output of the alternator. Third, the battery acts as a voltage stabilizer in the electrical system. Satisfactory operation of the vehicle is impossible unless the battery performs each of these functions.

The internal construction of a lead-acid storage battery is such that a highly reliable power source is provided. Two types of plates, one positive and the other negative, are the basic units. These plates consist of chemically active materials contained in grids. The grids are flat, rectangular, lattice-like castings. Each grid is designed specifically to hold the active materials. Once the grids have been pasted with the active materials, they are called plates. During the manufacturing process these plates are then said to be "charged." Charged negative plates contain sponge lead (Pb), which is gray in color. Charged positive plates contain lead peroxide (PbO_2), which has a dark brown color.

Safety Instructions

1. Obtain permission from your teacher before servicing or charging a storage battery.
2. Use proper instruments for testing a storage battery.
3. Avoid overfilling a battery, especially if it is to be charged.
4. Use water and baking soda (a neutralizer) to clean off the top of a battery.
5. Remove and transport a battery with a battery lifter.
6. Handle battery or acid with care. Wash immediately any part of your body or clothing that comes in contact with acid.
7. Wash hands immediately after handling a battery.
8. Wear goggles when using a charger.
9. Provide ample ventilation when using a charger.
10. Remove cell covers before charging a battery, unless the covers have other instructions upon them.
11. Keep open flames and sparks away from a battery being charged.

12. Turn off charger before disconnecting leads (wires) from charger to battery.
13. Replace cell covers before moving battery.

Scientific Principle Involved:
Conversion of Energy

Electromotive force (emf) can result from the immersion of certain pairs of dissimilar materials into the proper electrolyte. The lead-acid storage battery is a combination of negative plates of sponge lead (Pb) and positive plates of lead peroxide (PbO_2) immersed in an electrolyte of sulfuric acid (H_2SO_4) and water (H_2O). When the terminal posts are connected to form a complete circuit, a movement of electrons will result from the chemical action. This chemical reaction is between the active materials of two different kinds of plates and the electrolyte.

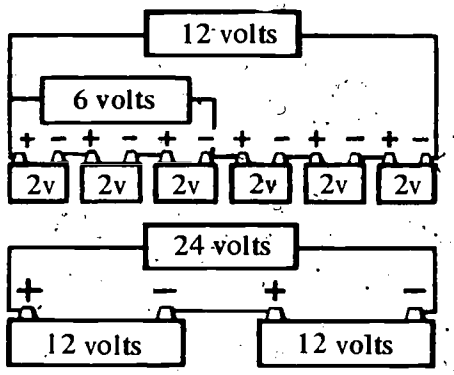

Each cell in a lead-acid storage battery has a potential of approximately 2 volts (actual potential is 2.2 volts per cell). Batteries containing three cells connected in series are 6-volt batteries; six cells connected in series are 12 volt. Applications requiring higher voltages use combinations of batteries, such as two 12-volt batteries connected in series to obtain a 24-volt system.

During the chemical reaction the oxygen (O_2) of the lead peroxide (PbO_2) of the positive plates combines with the hydrogen (H_2) of the sulfuric acid (H_2SO_4) to form water (H_2O); the sulfate (SO_4) from the sulfuric acid (H_2SO_4) combines with part of the lead (Pb) of the lead peroxide to form lead sulfate ($PbSO_4$). Also, a chemical change takes place at the negative plates. The lead (Pb) of the negative plate combines with the sulfate (SO_4) of the sulfuric acid (H_2SO_4) in the electrolyte to form lead sulfate ($PbSO_4$), which is the same material as the positive plates. The excess electrons transferred from the positive plates to the negative plates cause an imbalance which is corrected when the circuit is completed and the electrons move through the external circuit to the positive plates.

Application of Principle

1. A lead-acid cell can be made by placing parts of two plates (positive and negative) from a discarded storage battery in a dilute solution of sulfuric acid. When the plates are immersed in the electrolyte, little or no chemical action occurs. However, when the plates are connected in series with a 1.5-volt lamp, chemical activity will take place. *Note:* The use of an acid-resistant container of glass or plastic will make it possible to observe the chemical activity.
2. A simple voltaic cell can be made by inserting a strip of brass and a strip of galvanized iron (or a clean copper penny and a silver dime) into a lemon. Check current flow between strips or coins with a galvanomenter.

Selected References

Note: The numbers in parentheses in this section refer to entries in the list of selected references that appear within this publication immediately after the text.

(7), pp. 37-39; *(9)*, pp. 229-30; *(13)*; pp. 481-82; *(16)*, pp. 244-47; *(22)*, pp. 200-204; *(27)*, pp. 466-69; *(33)*, pp. 24-27; *(37)*, p. 415; *(47)*, pp. 233-42; *(65)*, pp. 44-47; *(66)*, pp. 155-57; *(69)*, Chapter 19, pp. 9-14; *(86)*, pp. 45-49; *(87)*, p.53.

Electrolysis

Electrolysis is the decomposition of a chemical compound by means of electrical energy. Electrolysis has been put to many useful purposes in industry, such as in the manufacturing of chlorine and fluorine gases, in electroplating, and in the extracting of aluminum and certain other metals from their ores. However, electrolysis can occur where it is not desirable; for example, during the charging of a storage battery. If the rate during charging (amperage rate of current flow) is too high, the battery will heat, producing an excessive amount of explosive gas (a mixture of hydrogen and oxygen) by electrolysis. These gases are also produced when the battery is overcharged (when charging is continued after the battery has a full charge). When a storage battery is being charged, the manufacturer's recommended charging rate should be followed; the charging should be done in a well-ventilated area, away from heat, sparks, and open flame.

Refer to the safety instructions previously mentioned in this unit.

Scientific Principle Involved:
Electrolysis

When an electrolytic cell (cell of a storage battery) is connected to a direct-current source, such as a battery charger, the cathode (negative plate) becomes negatively charged and the anode (positive plate) positively charged. Positive ions move to the cathode, where they acquire electrons from the cathode and are discharged. Negatively charged ions move to the anode and are discharged by giving up electrons to the anode. The loss of electrons by the cathode and the acquisition of a like number of electrons by the anode is, in effect, the conduction of electricity through the cell. The conduction of electricity through an electrolyte, together with the resulting chemical changes, is called electrolysis.

Application of Principle

The explosive nature of the hydrogen and oxygen gases produced through electrolysis when a storage battery is charged can be demonstrated by capturing the gases and igniting them in a safe manner. The demonstration can be conducted as follows:

1. A "cannon" can be constructed to demonstrate the potential hazard of a spark igniting gas given off from a storage battery being charged. An 18-inch length of 1½-inch pipe is capped at one end. The cap is drilled and tapped for a 14mm spark plug. This unit can be mounted on a stand. One terminal of a storage battery is connected by a length of No. 12 wire to a primary terminal of a 12-volt ignition coil and the cannon barrel (pipe). The other battery terminal is connected with No. 12 wire through a push-button starter switch to the other primary terminal of the ignition coil. The high-tension terminal is connected to the spark plug. Then the cannon barrel is placed for about five minutes over a cell opening of a battery that is charging and gassing freely. The cannon is then removed and placed at a demonstration location. The starter button is pressed to ignite the accumulated gas.

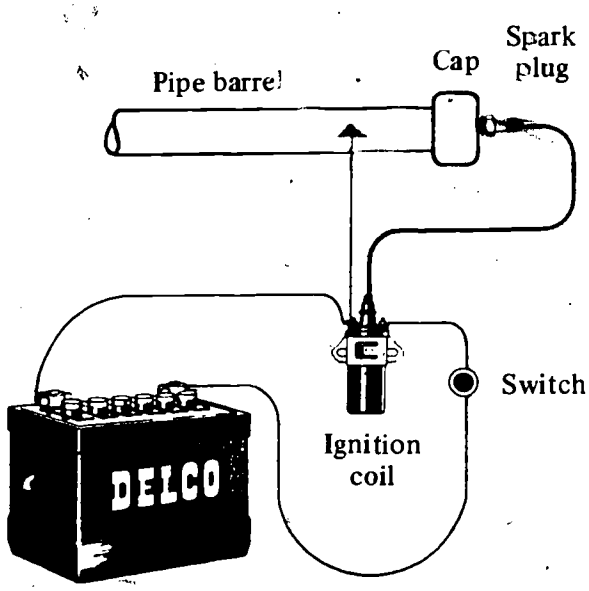

2. A simple means of capturing the gases produced during the charging of a storage battery is to insert in the cell openings of the battery rubber stoppers (with a hole in the center of each stopper for a glass elbow for the end cell and T joints for the others). The glass tubes are connected in series by the use of pieces of rubber tubing. This series hookup is then connected by a rubber tube that leads to a shallow pan partly filled with water. If all tubing connections are tight and the battery is charging, gas will bubble slowly from the submerged end of the tubing. After sufficient time has elapsed (ten minutes to half an hour) for the gases from the battery to replace the air in the tube, gas samples may be collected in small jars or wide-mouth bottles (2 to 8 ounces in capacity) by water displacement. So that the gas can be burned or exploded safely, the inverted jar is lifted from the pan, covered with a glass plate, and placed right side up on a table. At arm's length from the jar, the glass plate is removed and a burning match is thrust into the mouth of the jar. Pure hydrogen pops, then burns quietly with an almost invisible flame. Hydrogen mixed with oxygen or air explodes with a pop or a shriek, depending on the composition of the mixture. *Note:* Use only a small, wide-mouth bottle or jar for this demonstration. Do not collect gas in a large container and do not explode gas in a confined space, such as a bottle with a narrow neck or a bottle with a stopper. Do not attempt to light the gas at the end of the rubber tube.

Selected References

Note: The numbers in parentheses in this section refer to entries in the list of selected references that appear within this publication immediately after the text.

(9), pp. 46-47; *(13)*, pp. 280-81; *(27)*, pp. 498-506; *(37)*, p. 294.

Hydrometer Test

Each cell of a lead-acid storage battery contains balanced quantities of positive active material, negative active material, and sulfuric acid. The sulfuric acid is diluted with water, and the solution is called the electrolyte. When the cell is fully charged, the active materials are free of sulfate, and the strength of the electrolyte is at its maximum. When a cell discharges, the active materials react with the sulfuric acid in the electrolyte, and lead sulfate is formed on the plates. This reaction gradually lowers the strength of the electrolyte. Since the strength of the electrolyte varies directly with the state of the charge of the cell, this strength offers a convenient basis for estimating the state of the charge. To determine approximately the state of charge and how much energy is available from a battery, one needs only to measure the specific gravity of the electrolyte.

Specific gravity can be measured by means of a battery hydrometer. In the taking of a specific gravity reading, it is important that the float be freely suspended in the liquid, not touching the walls, top, or bottom of the barrel. It is important also that the eye be approximately at the liquid level when the reading is taken. Specific gravity readings are affected by temperatures; 80 degrees F. is the accepted standard. For every 10 degrees of electrolyte temperature *above* 80 degrees F., four gravity points (.004) must be *added* to the gravity reading. This addition compensates for the loss of gravity caused by expansion of the liquid as its temperature increases. For every 10 degrees of electrolyte temperature *below* 80 degrees F., four gravity points must be *subtracted* from the gravity reading. This subtraction compensates for the gain in gravity caused by the contraction of the liquid as its temperature decreases.

Refer to the safety instruction previously listed in this unit.

Scientific Principle Involved:
Specific Gravity

All liquids have weight; some weigh more than others. The weight of a unit volume (e.g., cubic centimeter) of a liquid is called its density. When the density of one liquid is compared to a standard, the relationship is called the liquid's specific gravity. All liquids are compared to water, which is given a specific gravity of 1.000. If it is found that 1 cubic centimeter of iron weighs 7.6 times as much as 1 cubic centimeter of water, it is said that the specific gravity of iron is 7.6. An object placed in a container of liquid is buoyed or lifted by an amount equal to the weight of the liquid it displaces; this is called Archimedes' principle. The denser the liquid, therefore, the greater is its buoyant force on the object. For example, as sulfuric acid is denser than water, a mixture containing more acid, as in a fully charged battery, will buoy a floating object higher than a mixture containing less acid, as in a discharged battery. A hydrometer uses a calibrated (specifically marked) float that measures the density or specific gravity of a liquid compared to pure water. Thus, this instrument will measure how much acid is mixed with the water in a battery by weighing the mixture – that is, more acid makes the float rise higher and less acid lets the float sink deeper. The markings on the calibrated float give the specific gravity of the mixture compared to pure water.

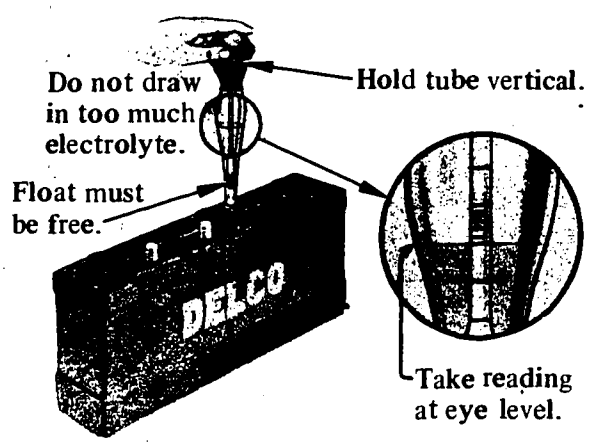

The hydrometer is used to measure the specific gravity of the storage battery electrolyte (Delco-Remy Division, General Motors Corp.).

Application of Principle

1. Information concerning the hydrometer can be applied by testing a storage battery (preferably one recently removed from an automobile). In the performance of the test, care

must be taken to avoid spilling the electrolyte because it contains sulfuric acid, which can burn a person's skin or destroy his clothing. If spilling should occur, the acid should be washed off with plenty of water. The hands should always be washed immediately after a storage battery has been handled.

2. A hydrometer can be used to measure/test antifreeze solutions and crude oil.

Selected References

Note: The numbers in parentheses in this section refer to entries in the list of selected references that appear within this publication immediately after the text.

(7), p.39; *(22)*, pp. 357-58; *(27)*, p. 207; *(47)*, p. 237; *(71)*, p. 28; *(86)*, p. 48.

Battery Installation and Servicing

A storage battery is designed to withstand normal operating conditions; however, excessive mechanical abuse will lead to early failure. Mechanical abuse often occurs during installation. So that a battery might be properly installed, recommendations for installation are given as follows:

1. Before installing the battery, check for proper battery polarity with respect to the vehicle's specifications. "Ground" polarity is usually indicated. Avoid reversed polarity during installation by marking cables as to their polarity when removing the old battery since reversed battery polarity may cause serious damage to the electrical system. Remember that the positive battery terminal post is larger than the negative terminal post. *Note:* When installing batteries, disconnect the "grounded" cable at the battery terminal first and reconnect it last to avoid damage to the battery and wiring by accidental "grounds."
2. Be sure that the battery carrier and hold-down device are clean and that the new battery rests level when installed.
3. Tighten the hold-down device until it is snug; however, do not draw it tight enough to distort or crack the battery case.
4. Be sure that the cables are in good condition and that the terminal clamps are clean.
5. Clean the battery terminals with a wire brush before attaching the cable clamps. Do not pound the clamps onto the battery terminals. When tightening cable nuts, use the wrench carefully to avoid twisting and damaging the cell cover.
6. Make sure that the cable terminals are clean and tight at the engine or frame and also at the cranking motor switch and solenoid.

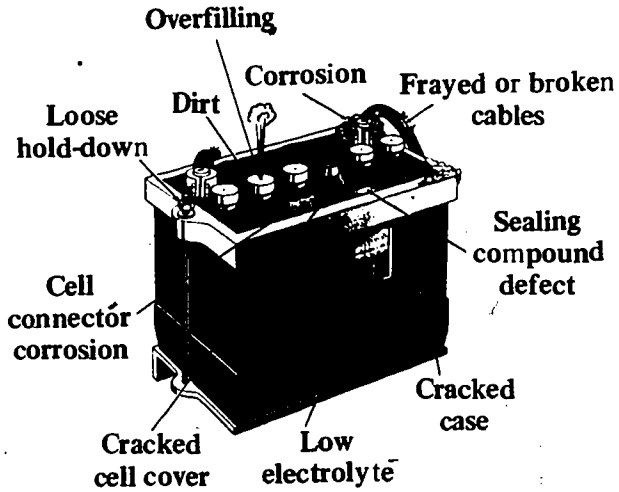

The importance of periodic battery service cannot be overemphasized. With a reasonable amount of attention and care, the useful life of the battery can be greatly extended; neglect and abuse, however, will shorten its life. Any servicing and maintenance program should include the following points:

1. Inspect the battery thoroughly for defective cables, loose connectors, corrosion, cracked cases and covers, and loose hold-down devices.
2. Check the electrolyte level periodically, particularly in hot weather, and add pure water if necessary to bring the liquid to the required level in each cell. Overfilling should be avoided, as this will cause the loss of electrolyte, resulting in excessive corrosion, reduced battery performance, and shorter battery life. Allowing the electrolyte level to drop below the tops of the plates will cause the exposed plate material to become dry and chemically inactive. Also, the high concentration of electrolyte remaining in the battery will cause permanent damage on the plate area below the electrolyte level, causing poor battery performance and shorter life.

   If the battery requires the addition of an excessive amount of water in normal service, an overcharged condition is indicated. Some water usage is normal, usually 1 to 2 ounces per battery per 1,000 miles of service, depending on the type of service and prevailing temperatures. If the water usage becomes

excessive, high battery temperatures or a high voltage-regulator setting should be suspected as the most likely causes. If very little water is used over three or four thousand miles of service, an undercharged battery may be indicated. Allowing the battery to remain in an undercharged condition for excessive periods may result in plate sulfation and permanent damage. The cause of the undercharged condition should be immediately corrected in order to insure optimum battery life.

3. Periodically, clean the battery top, posts, cable clamps, carrier, and hold-down device with a diluted ammonia or soda solution to remove corrosion and other foreign material. After cleaning, flush with clean water and apply a thin coating of petroleum jelly to the cable clamps and posts to retard corrosion. Tighten the hold-down device so that the battery will not shake in the carrier, but avoid over-tightening to avoid possible damage to the battery case.

Refer to the safety instructions previously listed in this unit.

Scientific Principle Involved:
Corrosion and Oxidation

The term corrosion may be used to denote the chemical change which takes place when a metal combines with oxygen. (Examples include the formation of an oxide scale on steel heated in air and of hydrous oxide rust on iron exposed to water or damp air.) Chemical change also occurs when metal comes into contact with an acid. The heat given off by an internal-combustion engine, moisture in the air, and the spilling or spraying of an electrolyte cause the corrosion of battery terminals, cable clamps, and holders.

Application of Principle

Skills can be applied and knowledge extended through the installation and servicing of storage batteries. Servicing can be made of batteries installed in automobiles or recently removed from them.

Selected References

Note: The numbers in parentheses in this section refer to entries in the list of selected references that appear within this publication immediately after the text.

(4), pp. 110-11; *(22)*, pp. 359-63; *(69)*, Chapter 19, pp. 13-14; *(71)*, p. 28; *(75)*, Chapter 36, pp. 19-24, *(78)*, pp. 247-57.

Battery Testing

The storage battery may be tested to determine if it is in good condition or if it is defective or worn out and must be replaced. Before the performance of any electrical checks, a visual inspection should be made to reveal any obvious defects. If the case or covers are cracked or if the battery has unusual odors or is otherwise damaged, the battery should be replaced.

The light-load test and the hydrometer test (which was explained earlier in this unit) should be performed on batteries having individual cell covers. The light-load test is simple, quick, and accurate; it should be applied to batteries before they are charged. Otherwise, defective cells may pass the test and cause a false diagnosis. An expanded scale voltmeter (one that has .01 volt per scale division) is needed for this test.

To check the electrical condition of battery cells using the light-load test, first check the electrolyte level in each cell. If necessary, raise it to the proper level by adding pure water. Then, if the battery is in the vehicle, place a load on the battery by holding the starter switch on for three seconds or until the engine starts. If the engine starts, turn off the ignition immediately. If the battery is out of the vehicle, place a 150-ampere load on it for three seconds. Next, turn on the headlights (low beam); or, if the battery is out of the vehicle, place a 10-ampere load on the battery. After one minute, with lights still on or the 10-ampere load still connected, read the voltage of each battery cell with a voltmeter, noting the exact voltages. It is necessary to remember only the highest and lowest cell voltages.

The condition of the battery can be determined by noting the difference in voltage readings between the individual cells as follows:

1. If any cell reads 1.95 volts or more and there is a difference of .05 volt (five divisions) or more between the highest and lowest cell, the battery is defective, damaged, or worn out and should be replaced.

2. If any cell reads 1.95 volts or more and the difference between the highest and lowest cell is less than .05 volt (five divisions), the battery is good and sufficiently charged.

3. If cells read both above and below 1.95 volts and the difference between the highest and lowest cell is less than .05 volt (five divisions), the battery is good but requires charging.

If all cells read less than 1.95 volts, the battery state of charge is too low to test accurately. Boost-charge and repeat the light-load test. Boost-charge all 12-volt batteries rated at 100 ampere-hours or less at 50 amperes for 20 minutes (1,000 ampere-minutes). Charge all other batteries, both 6-and 12-volt, at 60 amperes for 30 minutes (1,800 ampere-minutes). If none of the cells comes up at 1.95 volts after the first boost charge, the battery should be given a second boost. Batteries which do not come up after a second boost charge should be replaced. If the charger being used will not give the rate specified, charge for an equal number of ampere-minutes at the next lower rate available. For purposes of the light-load test, do not boost a battery more than the amount indicated. If the battery is found to be good after boosting, it should be fully recharged by the slow-charge method before being placed in service.

The "421" test, the specific-gravity cell-comparison test, and the hydrometer test (which was explained earlier in this unit) may be used on batteries. In the specific-gravity cell-comparison test, the specific gravity of each cell, regardless of state of charge, is measured and interpreted. If specific gravity readings show a difference between the highest and lowest cell of .050 (50 points) or more, the battery is defective and must be replaced.

The "421" test is a specific, programmed test procedure consisting of a series of timed discharge and charge cycles that will determine the condition of the battery with a high degree of accuracy in a very short period of time. The "421" testers, which are manufactured by a number of different suppliers, automatically subject the battery to the programmed "421" test. The "421" testers, when used in the procedure as outlined in the chart that follows, will in two or three minutes accurately determine the condition of any 12-volt unit regardless of size, in or out of the vehicle, in any state of charge, and at any temperature.

EXAMINATION OR TEST	WHAT TO LOOK FOR	ACTION
1. VISUAL INSPECTION NOTE: If no visual defects are found proceed to Test 2.	a. Cracked cases and covers	REPLACE BATTERIES
	b. Electrolyte level below top of plates.	Low electrolyte level may cause permanent damage to batteries. Fill with water to proper level and proceed with careful testing of battery, to determine if damage has occurred. Low electrolyte level indicates that the battery has been neglected for an extended period of time and/or the battery is being subjected to overcharge in which case the charging system should be checked for correct voltage setting.
	c. Other abuse.	REPLACE BATTERIES—If terminals are loose or bent, sealing compound removed, cell covers damaged, plates or separators damaged by insertion of probes, tools, etc.
2. "421" TEST NOTES: A. *Do not charge units* prior to making test. B. "421" testers are produced by a number of different manufacturers—follow the directions for tester operation. C. Be certain to obtain clean and tight connections before performing this test. D. All meter readings must be made immediately after indicator light comes "ON".	Batteries designated as *Bad* by tester.	REPLACE BATTERIES
	Batteries designated as *Good* and with no owner complaint or indication of poor performance.	RETURN TO SERVICE— Posts, cables and top should be clean and batteries should be in at least a 75% state-of-charge.
	Batteries designated as *Good* by tester, but are still questionable because of owner complaint or age of battery.	Proceed to Step 3.
3. SPECIFIC GRAVITY (HYDROMETER) TEST NOTE: DO NOT charge battery prior to making test.	a. 50 points or more variation between highest and lowest cells.	REPLACE BATTERIES
	b. Less than 50 points variation between highest and lowest cells.	RETURN TO SERVICE— Posts, cables and top should be clean and the battery should be in at least 75% state-of-charge.

Refer to the safety instructions previously listed in this unit.

Scientific Principle Involved:
EMF and Capacity Rating

The lead-acid storage battery for automobiles with 6-volt electric systems is three 2.2-volt cells connected in series. The emf is approximately 6.6 volts. Six cells are connected in series to make up the battery for 12-volt systems.

The quantity of chemical energy stored in a battery depends on the magnitude (greatness) of the charging current and the time the current flows to bring it to a fully charged state. The capacity of a battery is usually rated in ampere-hours. One having a capacity rating of 90 ampere-hours could supply a current of 1 ampere for 90 hours, 2 amperes for 45 hours, 3 amperes for 30 hours, and so on.

Application of Principle

The procedures provided in this section can be used in testing storage batteries installed in vehicles or recently removed from them.

Selected References

Note: The numbers in parentheses in this section refer to entries in the list of selected references that appear within this publication immediately after the text.

(22), p. 204; *(26)*, pp. 298-99; *(27)*, pp. 469-72; *(33)*, p. 26; *(47)*, pp. 234-35; *(65)*, p. 198; *(86)*, pp. 46-47.

Battery Charging

There are two basic methods of recharging batteries. One is the slow-charge method and the other is the fast-charge method. As the names imply, the methods differ in the length of time the battery is charged and in the amount of charging current supplied. Before any battery is recharged, the cells should be checked and water added if necessary to bring the electrolyte to the proper level. Periodically during the charging process, the temperature of the electrolyte should be measured; and if the temperature exceeds 125 degrees F., the charge rate must be reduced or temporarily halted to avoid damage to the battery. The electrolyte temperature should never be allowed to exceed 125 degrees F.

The slow-charge method supplies the battery with a relatively low charging rate for a long period of time. The charging rate should be 7 percent of the ampere-hour rating of the battery. *Example:* If the ampere-hour rating is 60 a.h., the charge rate should be 4.2 amperes or, for all practical purposes, 4 amperes. If the ampere-hour rating of the battery is unknown, the charge rate should be 5 amperes for passenger-car type batteries and 9 amperes for heavier batteries. Charging periods of 24 hours and more may be needed to bring the battery to full charge. The battery is fully charged when the cells are gassing freely and no change in specific gravity occurs over a one-hour period. Sulfated batteries (that is, batteries which have stood in a discharged condition for long periods of time without recharging) may require three or four days of slow charging in order to bring the battery to a fully charged condition. Batteries which are permanently sulfated can never be restored to a normal operating condition, regardless of the rate of charge or the length of time the charge is applied.

The fast-charge method supplies the battery with a high charging rate for a short period of time. Charging rates of 40 to 70 amperes are common, with charge periods varying from 1½ to 3 hours, depending on battery type and size. The high charging rate may be continued for as long as there is no electrolyte loss and the electrolyte temperature does not exceed 125 degrees F. Because of the short charging period and the high charging rate, the plates are not fully converted to lead peroxide (PbO_2) and sponge lead (Pb). This deficiency means that a battery cannot be fully recharged by the fast-charge method although it can be substantially "boosted" or recharged. For the complete recharging of the battery, the fast-charge procedure should be followed with a slow charge for a few hours. When fast chargers are used, the safeguards built into the charger by the manufacturer should never be ignored or circumvented as these safeguards are intended to protect the battery from damage. It is important to remember that an explosive mixture of hydrogen and oxygen gases is formed when any battery is being charged. As the mixture escapes through the battery vents, normal air circulation usually carries the explosive mixture away. But if circulation is poor or if the battery is being heavily charged, the explosive mixture may accumulate near the battery. Since a spark or flame can ignite the mixture and cause an internal battery explosion, care should be taken to avoid sparks and flame near the battery.

Refer to the safety instructions previously listed in this unit.

Scientific Principle Involved:
Chemical Change

The sulfuric acid electrolyte contains both hydrogen ions (H+) and sulfate ions (SO_4–). The negative plate, which is sponge lead, reacts with the sulfate ions in the electrolyte to produce a deposit of lead sulfate. During this reaction electrons are released; they move through the external circuit to provide electric power for the starter, lights, and other electrical equipment of the internal-combustion engine unit. The lead peroxide of the positive plate reacts with the hydrogen and sulfate ions of the electrolyte to form water and a deposit of lead sulfate.

When the external circuit is open, the movement of electrons is interrupted, causing both chemical reactions to stop. If the circuit is closed for a long period of time without the benefit of a charging current, the reactions will continue until the plate surfaces are covered with lead sulfate and most of the hydrogen and sulfate ions are removed from the electrolyte. The sponge lead of the negative plate and the porous lead peroxide of the positive plate provide greater internal surface areas for chemical change and collection of the lead-sulfate deposit.

Certain chemical reactions that produce a movement of electrons can be reversed if the movement of electrons is reversed. All rechargeable cells depend on a reaction of this type. When a lead and sulfuric acid battery is connected to a charger, the reactions are reversed. When charging is complete, both plates are restored to their original composition, and the electrolyte is restored to its original concentration of sulfuric acid (hydrogen and sulfate ions). This process is illustrated in a formula as follows:

$$PbO_2 + Pb + 2H_2SO_4 \underset{\text{Charging}}{\overset{\text{Discharging}}{\rightleftharpoons}} 2PbSO_4 + 2H_2O$$

Application of Principle

Charge lead-acid storage batteries and make tests covered under "Hydrometer Test" and "Battery Testing" in this unit.

Selected References

Note: The numbers in parentheses in this section refer to entries in the list of selected references that appear within this publication immediately after the text.

(4), pp. 105, 111; *(7)*, pp. 39-40; *(9)*, pp. 229-30; *(22)*, pp. 362-63; *(26)*, pp. 172-73; *(27)*, pp. 466-67; *(33)*, pp. 24-25; *(47)*, pp. 240-42; *(54)*, pp. 332-33; *(65)*, pp. 45-46; *(75)*, Chapter 36, pp. 21-23; *(78)*, pp. 242-43; *(86)*, pp. 46-49.

Unit 23 — GENERATION OF ELECTRICITY

This unit deals with (1) magnetos; (2) direct-current generators and alternators; (3) alternating-current rectifiers; and (4) generator regulation.

Magnetos

A magneto is a device which generates and distributes electricity for igniting the compressed fuel-air mixture in the combustion chamber of internal-combustion engines used to operate vehicles and portable or stationary equipment (for example, lawn mowers, motorcycles, chain saws, portable lighting systems, and outboard motorboats).

The magneto generates the electricity, steps up the low voltage to a high-tension voltage, and distributes it to the cylinder (or cylinders) at the correct instant. These operations are done without the aid of a storage battery. Certain magnetos are low-tension types; they generate a low voltage, which is then stepped up to a high voltage by means of a separate coil. High-tension magnetos produce voltage of sufficient value to jump the spark-plug gap without the use of a separate coil.

The difference between a magneto and a generator is that while the generator has an electromagnetic field requiring an outside source of electricity to excite it, the magneto uses permanent magnets for this field. Magneto ignition systems have certain advantages over the battery-demanding systems. The magneto systems are more portable and lighter, and they provide a spark that is hotter as the engine speed increases.

There are two types of magnetos, the low-tension type and the high-tension type. Magnetos are classified further according to the part of the magneto which is revolved. A magneto that has its windings on a rotor which is revolved in a magnetic field is known as a shuttle-wound magneto. In the

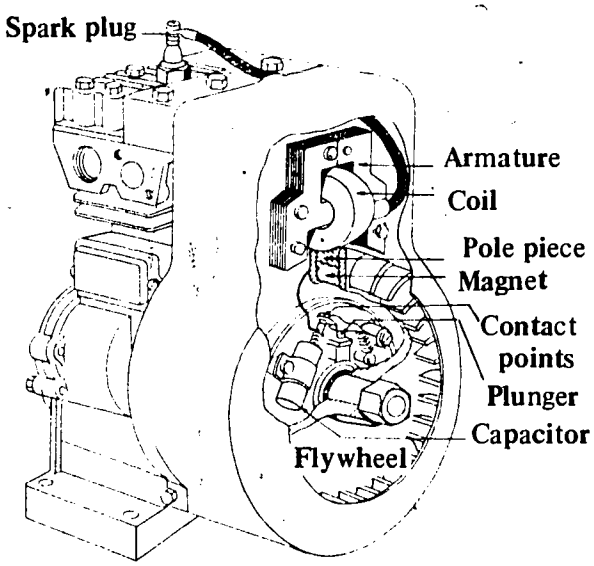

The magneto of a small engine produces electricity when the flywheel is rotated by the pulling of a rope wound around a pulley attached to the crankshaft (Briggs and Stratton Corp.).

inductor-type magneto both the coil and the magnet are mounted in stationary positions; movement of the magnetic field is obtained by making and breaking the magnetic field. A newly developed magneto, known as a revolving magnetic design, has been made possible by new types of magnets. The coil of the magneto is mounted in a stationary position, and one or more magnets are revolved between the pole pieces of the magneto.

A magneto, in a sense, consists of two simple circuits; one is called a primary circuit and the other a secondary circuit. Both circuits have windings which surround the same iron core, and the magnets in the flywheel or rotor act on both circuits. Current can be induced in each circuit by changing the magnetism in or around the coils. The primary circuit, which has relatively few turns of heavy wire, includes a set of breaker points and a capacitor. The secondary circuit, which has a coil with many turns of lighter wire wound around the outside of the primary winding, includes a spark plug. A permanent magnet is mounted in the flywheel or rotor; as the flywheel rotates, the magnet is brought into proximity with the coil and core.

Scientific Principle Involved:
Magnetism

Every magnet has a north pole and a south pole. Like poles repel each other (two north poles or two south poles); unlike poles attract each other (a north pole and a south pole). The reason for this phenomenon is that a magnetic force (or field) exists between the opposite poles of a magnet. This magnetic field is composed of invisible lines of force (magnetic flux).

There are two types of magnets, permanent magnets and temporary magnets (electromagnets). The earliest type of permanent magnet was the natural one of ore and was used as a compass in navigation. It was called a lodestone (lead stone). Now, permanent magnets are manufactured. Two common shapes of manufactured magnets are the bar magnet, which has a pole at each end, and the horseshoe magnet, which is a bar magnet that has been bent into a U shape so that the poles are close together. Originally, manufactured magnets were made of high carbon steel. Now, high quality permanent magnets are manufactured from alloys of steel and tungsten, chromium, and cobalt; from alloys of nickel and chromium; and from ceramics. These magnets not only are stronger but retain their magnetism for much longer periods.

The movement of electrons (flow of current) can be caused by revolving a coil of wire in a

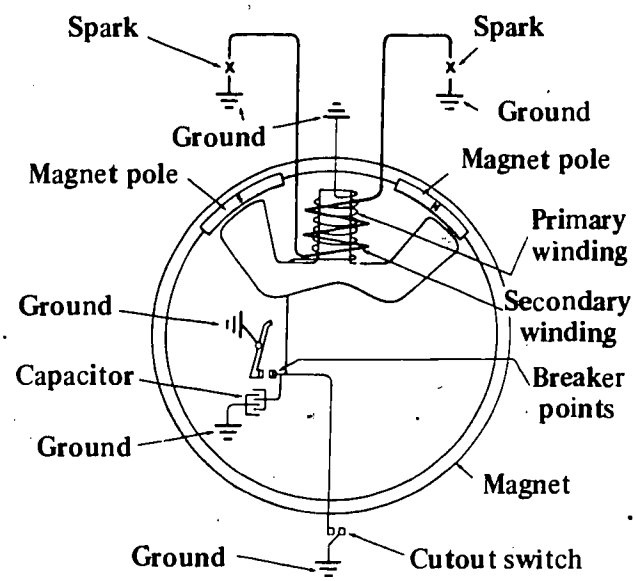

The schematic diagram given above presents the components of a flywheel-type magneto used in an outboard motor (Evinrude Motors).

magnetic field. In a conventional generator the magnetic field is produced by passing current through the field coils, which in turn produce the magnetic field (electromagnets). In the case of the magneto, the magnetic field is produced by means of permanent magnets. Magneto ignition systems

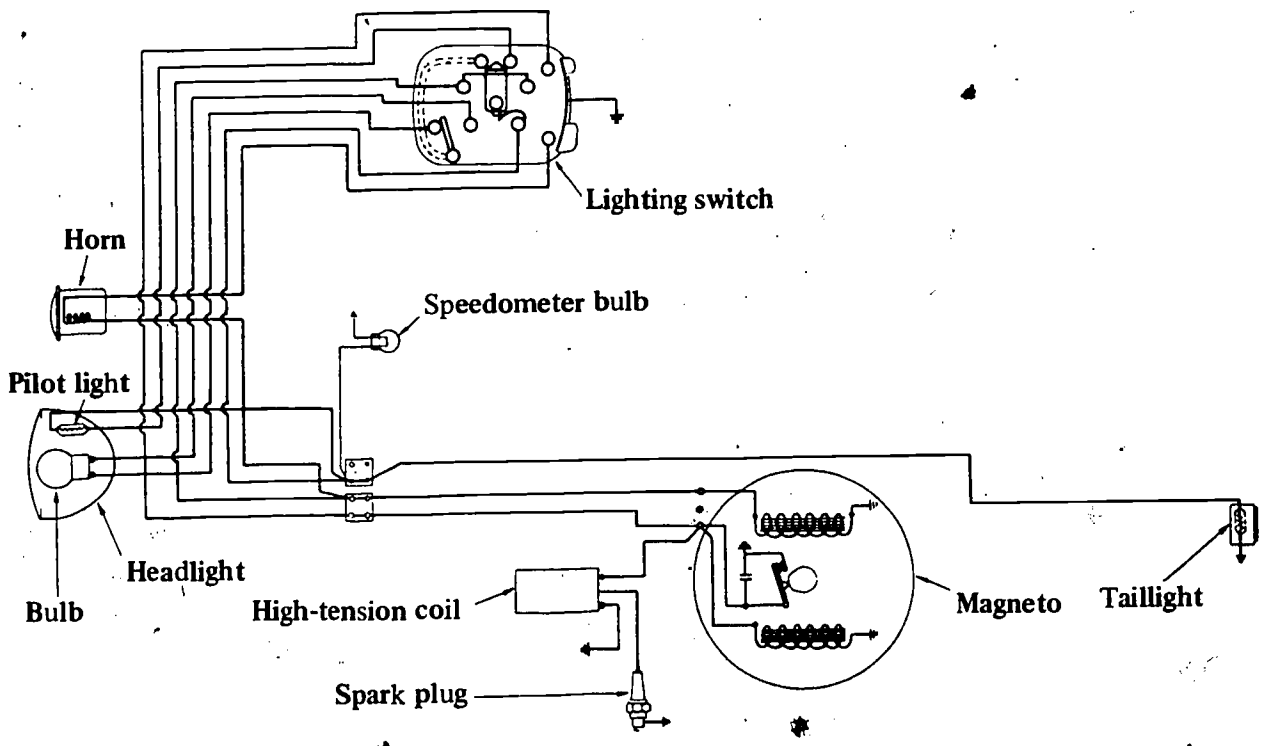

A flywheel magneto provides electrical current needed to operate the engine and the electrical components shown in the motor-scooter wiring diagram (Lambretta: Innocenti Motor Division).

have distinct advantages. They do not require any storage battery or other source of current, and the intensity of the generated voltage does not decrease but increases with the engine speed. Magnetos are particularly popular for internal-combustion engines where a storage battery is not needed for starting or lighting. The recent development of permanent magnets of greatly increased strength has improved their performance.

Application of Principle

1. Place a magnet under a sheet of glass or a piece of cardboard. Sprinkle iron filings on the glass or cardboard and tap lightly. The iron filings will show the form of the magnetic field.
2. Locate permanent magnets used in the components of small engines and automobiles (magneto, radio speaker, and compass).
3. Check the permanent magnet in a speedometer.
4. Service or repair a magneto.

Selected References

Note: The numbers in parentheses in this section refer to entries in the list of selected references that appear within this publication immediately after the text.

(13), pp. 482-90; *(15)*, pp. 13-22; *(19)*, pp. 28-33; *(26)*, pp. 159-61, 306-9; *(27)*, pp. 510-32; *(29)*, Section VII, pp. 1-3; *(32)*, pp. 15-18; *(33)*, pp. 55-58; *(47)*, pp. 57-61, 188-89; *(52)*, pp. 5, 9; *(53)*, pp. 19, 85-86; *(54)*, pp. 293-94; *(57)*, pp. 193-204; *(62)*, pp. 68-77; *(65)*, pp. 20-29; *(69)*, Chapter 3, pp. 18-21; *(75)*, Chapter 35, pp. 23-29, Chapter 36, p. 27; *(79)*, p. 20; *(81)*, pp. 25-27; *(84)*, pp. 46-47; *(85)*, Appendix; *(86)*, pp. 12-19, 104.

Direct-Current Generators and Alternators

The automobile must have some source of direct current (DC) to operate the starter, ignition, lights, and electrically operated accessories. A storage battery will furnish this electrical energy for a limited time. A direct-current generator, which converts mechanical energy provided by the engine to electrical energy, has been used for a number of years to keep the battery charged. Demands of the electrical system of modern automobiles have placed a heavy strain on the generator. For this reason the direct-current generator has been replaced in many vehicles by the alternator (alternating-current generator), which has the advantage of producing current at low speeds even when the

engine idles or the car is moving through slow traffic. The alternator produces alternating current (AC) much like that available in home electrical circuits. A rectifier is used to convert this alternating current to direct current. Manufacturers' directions should be followed when direct-current generators and alternators are installed and tested.

Scientific Principle Involved: Electromagnetic Induction

An electric potential is produced when a coil of wire is passed through a magnetic field. This principle is used in the automobile generator to produce current. When the armature (rotor) of a generator is turning, the coils pass through the magnetic flux of the field coils, producing an alternating current in the coils of the armature. The current alternates because the armature coil approaches the magnetic field from one direction and leaves in another. This movement causes the current to flow first in one direction and then in another, thus producing alternating current. The direct-current generator uses a commutator made of segments arranged on the armature so that they contact the brushes at the proper times during the rotation. This contact causes the pulsating current to flow in only one direction in the external circuit. The alternator uses slip rings and collects the alternating current, which is then converted to direct current with a rectifier. Unlike the magneto, which uses permanent magnets, these generators use field coils, which are electromagnets (temporary magnets). The electromagnets produce the

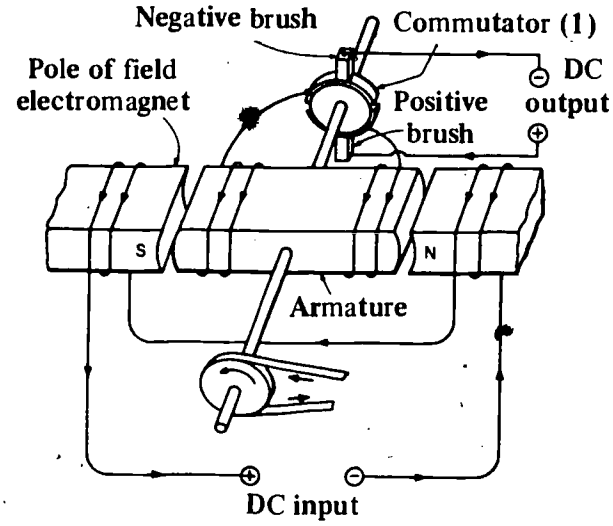

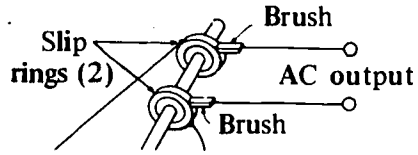

A basic direct-current generator is identical to a basic alternating-current generator except that one has a commutator and the other has slip rings. If the commutator (1) is replaced by the slip rings (2), the generator's output will become alternating current instead of direct current.

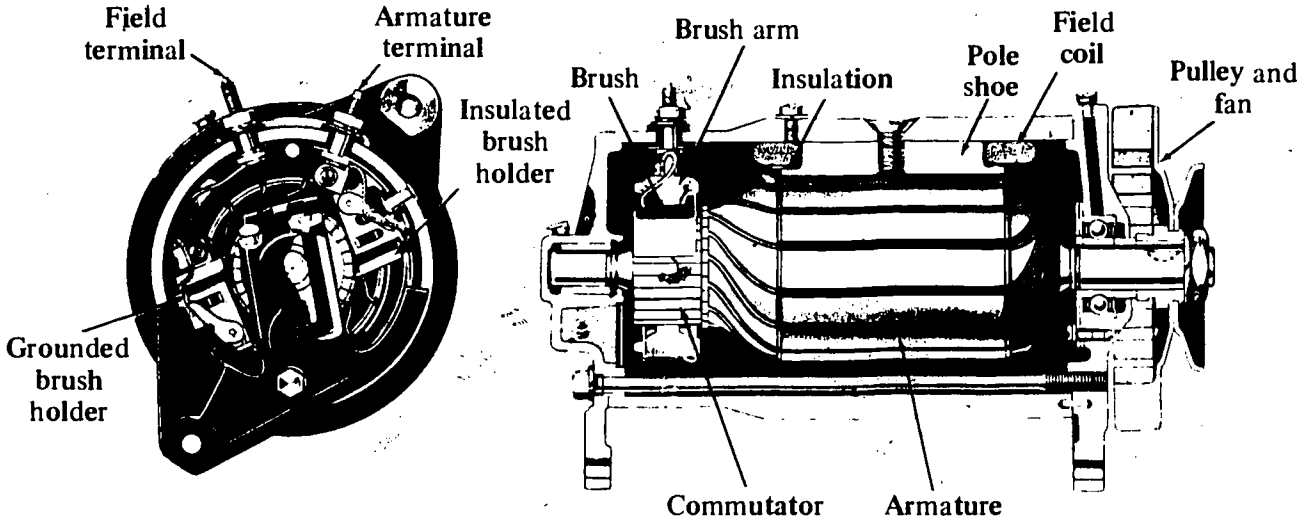

The illustrations presented above give an end view and a sectional view of a direct-current passenger-car generator (Delco-Remy Division, General Motors Corp.).

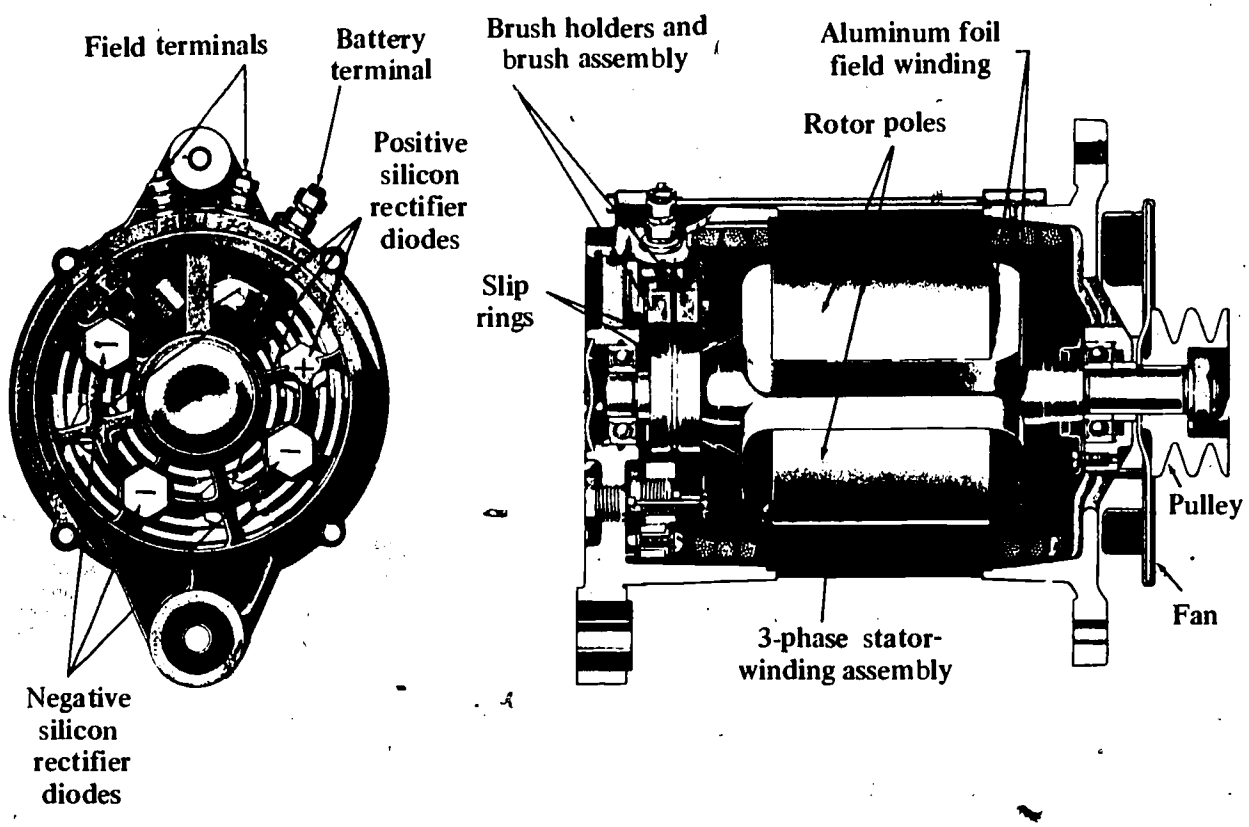

The illustrations presented above give an end view and a sectional view of an alternating-current generator (alternator) (Delco-Remy Division, General Motors Corp.).

properly oriented magnetic field when direct current is sent through the field coils as part of the direct current produced by the generator is supplied to these coils.

Application of Principle

1. The relationship of the field strength to the generator output can be shown by placing a variable resistor in the field circuit and regulating the amount of direct current supplied to the field.
2. A generator can be designed, constructed, and operated by a group of students.
3. Generators can be checked, serviced, and repaired.
4. A 6- or 12-volt light bulb can be connected to each end of a generator field coil; when the coil is lowered into the field of an operating growler, the bulb will light up.

Selected References

Note: The numbers in parentheses in this section refer to entries in the list of selected references that appear within this publication immediately after the text.

(10), pp. 7, 12-21, 24; *(13)*, [illegible]482, 490; *(22)*, pp. 215-25, 377-83; *(24)*, pp. [illegible]172-73; *(26)*, pp. 173-79, 316; *(27)*, pp. 53[illegible]; *(33)*, pp. 71-85; *(38)*, pp. 152-53; *(47)*, pp. 189-213, 218-22; *(51)*, pp. 5-11; *(54)*, pp. 321-26; *(62)*, pp. 111-17; *(65)*, pp. 200-201; *(66)*, pp. 158-59; *(69)*, Chapter 19, *pp. 1[illegible]-4*; (86), *pp. 105-8.*

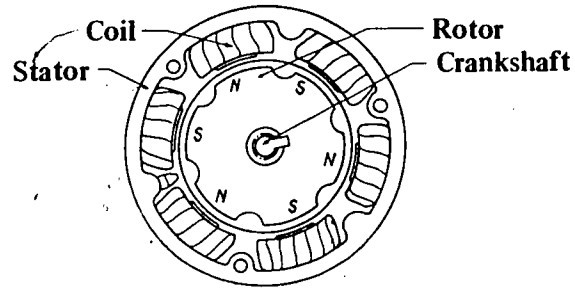

The rotor-type alternating-current generator used in motorcycles is composed of a stator with coils which are wound around iron cores and a rotor made of permanent magnets which is attached to the crankshaft (Honda Motor Company, Ltd.).

Alternating-Current Rectifiers

Alternating-current generators (alternators) produce alternating current that is used in the home, in industry, and in the electrical components of automobiles and other units driven by internal-combustion engines. However, direct current is required for the operation of certain components of many electric/electronic devices, such as the electrical systems of internal-combustion-engine units, the circuits of radio and television transmitters and receivers, and measuring instruments (meters). Therefore, the alternating-current output of alternating-current generators must at times be changed or rectified to direct current. This change or rectification is accomplished by the use of selenium, silicon, magnesium-copper sulphide, or copper-oxide rectifiers or electron tubes, which furnish a one-way path for electric current or movement of electrons.

The silicon rectifier or silicon diode rectifier is one of the most recent types of rectifiers to be developed. Because of its small size, it is built into the frame of the automobile's alternator. Plate-type rectifiers are relatively large in size and are mounted externally.

Single-phase alternating current would result in a pulsating current. To provide a much smoother flow of current, alternators are built with three stator circuits which, in effect, give overlapping pulses of alternating current. When these pulses are rectified through diodes, a comparatively smooth flow of direct current is obtained.

Scientific Principle Involved: Rectification

The process of changing alternating current to direct current is called rectification. When a silicon diode rectifier is placed in series with a load (electrical device) in a circuit and is supplied with an alternating current, the current is allowed to flow in only one direction. This type of rectifier, which is called a half-wave rectifier, provides pulsating direct current. For one half of each cycle of alternating current, the current flows through the rectifier and load. During the other half-cycle, the current cannot flow through the rectifier so that no current flows through the circuit. Capacitors can be used to smooth out the pulsating current; however, full-wave or bridge rectifiers, which use both halves of each cycle, or three-phase alternators produce a smoother direct-current output.

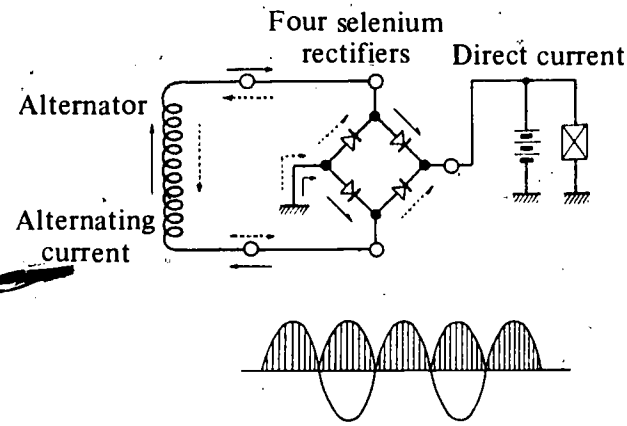

A full-wave or bridge rectifier is used to rectify alternating current produced by alternators. In the diagram presented above, four selenium rectifiers are interconnected to provide direct current during both halves of the alternating-current cycle (Honda Motor Company, Ltd.).

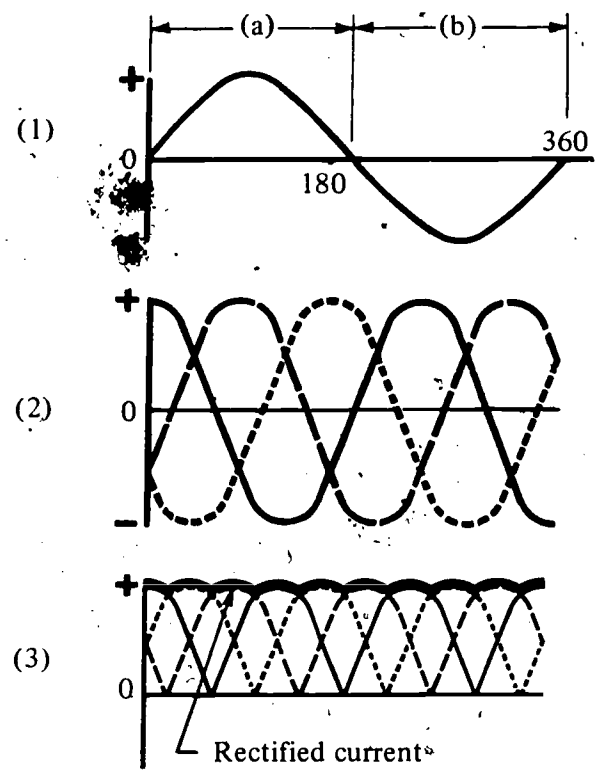

In the diagram of a single-phase alternating current (1), the positive half wave is represented by (a), the negative half wave by (b). In the three-phase alternating current (2), the phase outputs overlap but do not coincide. The three-phase alternating current depicted in (2) is shown as rectified direct current in (3).

Application of Principle

1. Locate rectifiers in the generator circuit of automobiles and other units driven by internal-combustion engines.
2. Disassemble, clean, check, and, if necessary, repair generators used in the electrical system of internal-combustion-engine units.
3. Mount a ½-horsepower, single-phase motor, a 35-ampere alternator, a regulator, and a storage battery on a piece of plywood. Charge the battery by driving the alternator with the motor.
4. Use an ohmmeter to demonstrate how a silicon diode rectifier will have low resistance in one direction and high resistance in the other.
5. Demonstrate magnetic fields by placing several coils around a cardboard tube and pulling a piece of iron through the tube by turning on each coil in turn.

Selected References

Note: The numbers in parentheses in this section refer to entries in the list of selected references that appear within this publication immediately after the text.

(5), pp. 1-15; *(13)*, pp. 489-90; *(22)*, pp. 217-22, 381-83; *(24)*, pp. 195-99; *(26)*, pp. 174-75; *(27)*, pp. 645-48; *(33)*, pp. 81-83, 177-80; *(38)*, pp. 152-56; *(47)*, pp. 172-78, 409; *(51)*, pp. 21-23; *(53)*, pp. 23-25; *(65)*, pp. 285-90; *(69)*, Chapter 19, pp. 25-29; *(75)*, Chapter 31, pp. 1-22; *(86)*, pp. 135-36.

Generator Regulation

Both alternating-current and direct-current generators require a regulator which prevents the generator from producing excessive voltage/current. Without regulation, a generator would continue to increase its output as speed increased until it would be producing so much current that it would overheat and burn up. If an unregulated generator were connected to the electric circuit of an automobile or to other units driven by an internal-combustion engine, the storage battery would be greatly overcharged and the electrical devices could be damaged. The direct-current generator uses an external resistance to control voltage and amperage output. Various devices are used to regulate alternating-current generators by placing resistance in the generator field circuit. Cutout relays (circuit breakers) are a part of the regulation system of direct-current generators and some alternating-current generators. The cutout relay closes the circuit between the generator and battery when the generator is producing current; it opens this circuit so that the battery cannot discharge through the generator when the generator slows or stops. Certain alternating-current generators, because their design makes them self-limiting, have no cutout relays and no current regulators. The rectifying diodes or transistors in the circuit (transistor systems) prevent reverse current or discharge of the battery through the generator.

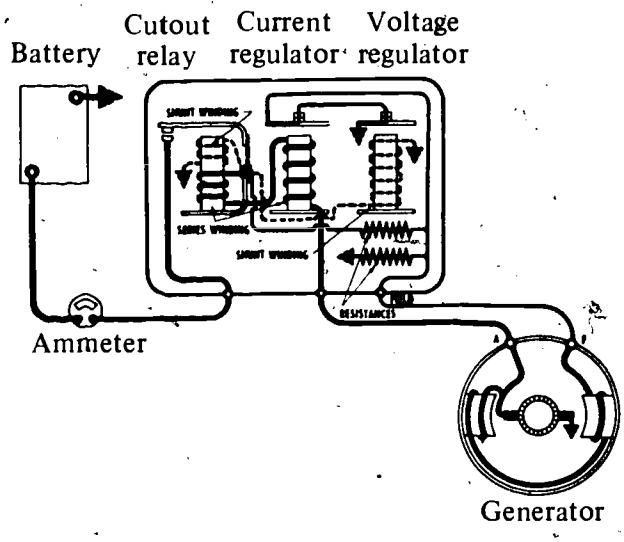

A conventional three-unit regulator is used with a generator.

Scientific Principle Involved: Electromagnetic Switch

The cutout relay, voltage regulator, and current regulator are switches operated by an electromagnet. The cutout relay consists of two windings (coils) around a core and a flat steel armature, mounted on a hinge above the core. A contact point on the armature is positioned just above a stationary contact point that is connected to the battery. When the generator is not operating, a spring holds the two points apart, keeping open the circuit between the generator and battery. When the generator begins to operate, current flows through one winding, induces voltage in the other winding, and creates a magnetic field around the core. The armature is pulled by the electromagnet and the contact points come together (close). This action completes the circuit between the generator and the battery. When the generator stops, current begins to flow from the battery to the generator.

This reversal of current flow creates a reverse magnetic field in one winding which bucks the magnetic field in the other winding. The weakened magnetic field can no longer hold the armature down and keep the contact points together. When the armature springs up, the circuit between the battery and the generator opens.

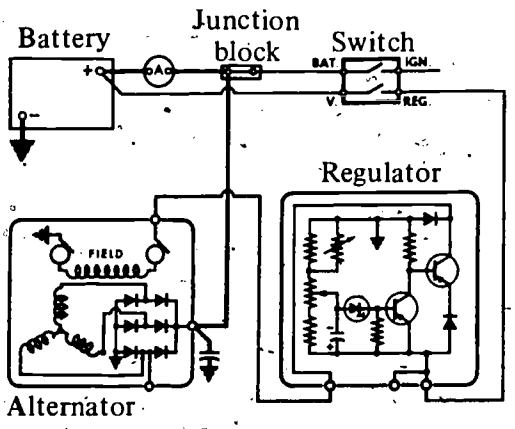

The alternator employs a transistor regulator.

Application of Principle

1. Locate regulators in the generator circuit of automobiles and other units driven by internal-combustion engines.
2. Clean, check, and, if necessary, repair regulators (cutout relays, voltage regulators, current regulators, and transistor systems).

Selected References

Note: The numbers in parentheses in this section refer to entries in the list of selected references that appear within this publication immediately after the text.

(4), pp. 124-27; *(5)*, pp. 1-15; *(7)*, pp. 42-44; *(13)*, pp. 486-87; *(19)*, pp. 226-37; *(22)*, pp. 2[illegible]5-32; *(26)*, pp. 309-11; *(27)*, pp. 519-24; *(33)*, p. 60; *(36)*, pp. 85-96; *(47)*, pp. 321-29; *(65)*, pp. 198-202; *(66)*, pp. 154-55; *(69)*, Chapter 19, pp. 20-23; *(75)*, Chapter 33, pp. 1-23; *(78)*, pp. 286-329.

Unit 24 — TRANSMISSION OF ELECTRIC POWER

Both the storage battery and the electric generator (alternator) have positive and negative terminals. The positive terminal, which has a shortage of electrons, attracts electrons. The negative terminal, which has an excess of electrons, repels electrons. When a circuit is completed between the terminals, electrons move through the circuit. They will move as long as there is a complete circuit and as long as the electromotive force is maintained. The original electrons that start out displace electrons in the next atoms, and so on along the length of the circuit. The movement of electrons is called an electric current.

The modern automobile has an alternator and a storage battery to supply the electrical system. Electrons move (or current flows) through wires to the ignition and lighting systems and through cables to the storage battery and the starting (cranking) motor. The internal current flow in the electrolyte is a movement of positive and negative ions in opposite directions.

Scientific Principle Involved:
Electromotive Force

A device such as a storage battery or an electric generator provides the electromotive force which removes electrons from one end of a wire and piles them up at the other end. When the number of electrons at one end of a wire exceeds the number at the other end, an electric field is set up between the ends of the wire. This field causes free electrons in the wire to move from the negative end to the positive one. This movement of electrons is the flow of electric current; it is the electromotive force (voltage) that creates the electric pressure that causes the current to flow.

Application of Principle

1. Use a proper meter to check the electromotive force (voltage) of a storage battery and a generator.
2. Use a proper meter to determine the positive and negative terminals of a dry cell and storage battery.

Note: An ammeter must always be connected in series with the circuit. To make a series connection requires breaking the circuit to connect the meter. A voltmeter is always connected in parallel or across the circuit. The circuit does not have to be broken so that voltage can be measured. Use direct-current meters to measure direct currents and voltages. Direct-current meters must always be connected with the correct polarity. Use alternat-

ing-current meters to measure alternating currents and voltages.

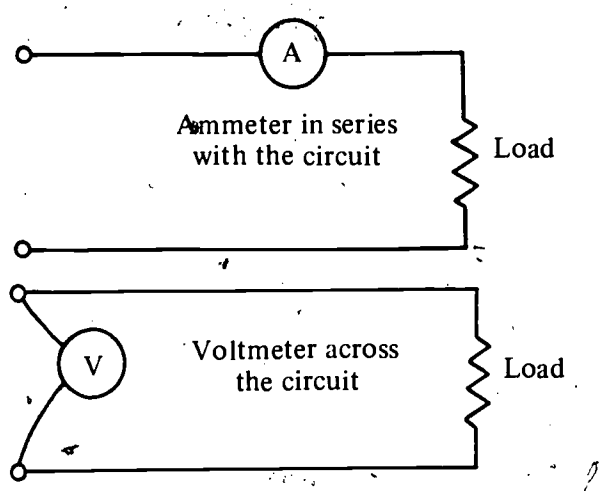

Selected References

Note: The numbers in parentheses in this section refer to entries in the list of selected references that appear within this publication immediately after the text.

(13), pp. 490-91; *(22)*, p. 201; *(26)*, p. 296; *(27)*, pp. 463, 560-61; *(33)*, pp. 152-64; *(47)*, pp. 22-23, 34-35; *(62)*, pp. 15-19; *(66)*, pp. 150-52.

Conductors and Insulators

A conductor is a material that readily allows a flow of electrical current (movement of electrons). Metals are good conductors of electricity. Silver is the best conductor; copper and aluminum follow, in that order. For this reason wires, cables, straps, and bars used in transmitting electric power are made of copper or aluminum, and silver is used in the manufacture of many electronic parts. Solutions of salts, acids, and bases are fairly good conductors.

An insulator is a material that will not readily conduct electricity (resisting the movement of electrons). Rubber, glass, porcelain, mica, amber, oils, and sulfur are good insulators. Rubber and plastic serve as insulating shields around wires used to conduct electricity. Power lines are attached to insulators made of glass or porcelain. Pure water is an insulator, but water from a faucet is not because it usually contains small amounts of dissolved impurities.

The movement of electrons can be stopped by an open circuit (a switch in the "off" position or a break in a conductor) or shorted or grounded by a conductor that is not a part of the intended circuit.

Scientific Principle Involved:
Electron Theory

An atom is composed of particles of matter called protons, neutrons, and electrons. The protons and neutrons form the nucleus, which is the center of the atom. The electrons are arranged outside the nucleus in an orderly manner. Each atom has an equal number of protons and electrons. The proton carries a positive (+) electric charge, the neutron carries no electric charge, and the electron carries a negative (−) electric charge. A normal atom has no electric charge because the positive charge of the protons in the nucleus is canceled or neutralized by the negative charge of the electrons outside the nucleus.

The protons in the nucleus cannot easily be moved; however, the electrons can be disturbed and even pulled away from the atom. When this occurs and electrons are taken away from a neutral atom, the atom has a positive charge and becomes a positive ion; that is, the atom has more positively charged protons than negatively charged electrons. Conversely, if extra electrons are added to a neutral atom, the atom has a negative charge and becomes a negative ion.

Some atoms hold their electrons very tightly. Substances made up of atoms of this type are known as insulators; electrons do not move through them easily. These substances are usually nonmetallic. Other atoms have electrons that are held very loosely. Some of these electrons jump rapidly from atom to atom as "free electrons." Substances made up of atoms of this type are called conductors; electrons move through them easily. The best conductors are metals, such as silver, copper, and aluminum. When electrons are taken from atoms in a conductor, the atoms become charged positively, and the electrons from nearby atoms are attracted to them, moving into spaces left by the departed electrons. This action is repeated along the entire length of the conductor. A positive charge placed on any part of the conductor causes a movement of electrons from atom to atom within the conductor. This movement of electrons is called an electrical current.

Application of Principle

1. Check the amperage of circuits using an ammeter, a 1.5-volt dry cell, and the types and lengths of wires that follow:
   a. Five feet each of No. 22 copper, aluminum, and nichrome wire, connected separately in circuits

b. Five feet of No. 18 copper wire, and then five feet of No. 28 copper wire
c. One foot of No. 28 copper wire and then a ten-foot piece of No. 28 copper wire

2. Attempt to operate the starting (cranking) motor of an automobile by connecting a small gauge conductor, such as a length of No. 16 copper wire, between storage battery and starter.
3. Inspect the electrical systems of a small engine unit and an automobile.

Selected References

Note: The numbers in parentheses in this section refer to entries in the list of selected references that appear within this publication immediately after the text.

(13), p. 491; *(27)*, pp. 430-31; *(33)*, pp. 16-17; *(47)*, pp. 10, 25; *(54)*, pp. 316-19; *(62)*, pp. 59-67; *(63)*, pp. 162-67; *(65)*, pp. 96-101; *(69)*, Chapter 2, pp. 5-7, Chapter 19, pp. 4-5; *(75)*, Chapter 30, p. 2, Chapter 36, pp. 4-12; *(81)*, pp. 17-18; *(86)*, pp. 5, 53.

Voltage, Current, and Resistance

Voltage (E) or electromotive force (emf) is electrical pressure that will cause electrons to move (current to flow) in a closed circuit. The force is the repelling force caused by a surplus of electrons and the attracting force caused by a deficiency of electrons. Electrical pressure or potential difference is measured in volts. It is the voltage which causes the flow of current in a closed circuit to provide heat and light and operate electrical equipment.

Current (I) is the rate of the electron movement. Current may be simply described as the rate of movement of electrons in a circuit. The basic unit of measurement for current is the ampere. Electrons move from negative to positive in a circuit.

Resistance (R) is opposition to the movement of electrons (flow of current) and is measured in ohms. All components in a circuit, including wires, have some resistance. Electric motors, appliances, and other electrical devices have resistance. Resistance is the property limiting the flow of current in a closed circuit.

Scientific Principle Involved:
Ohm's Law

The movement of electrons in an electrical circuit occurs when voltage overcomes resistance, causing current to flow. Voltage is the pressure that causes the flow of current (movement of electrons). Resistance is the opposition offered by the circuit to the flow of current (movement of electrons). Current is the movement of electrons. Ohm's law states the relationship of voltage, current, and resistance as follows: *Voltage = current × resistance.*

Ohm's law plays an important role in the checking of automotive and other electric circuits. When electric meters are used to measure the voltage, current, and resistance in a circuit, Ohm's law is applied. Voltage is measured in volts, current in amperes (amps), and resistance in ohms. The symbols or letters used to represent voltage, current, and resistance are E for voltage, I for current, and R for resistance. The relationship *Voltage = current × resistance* can also be expressed as $E = I \times R$. When the voltage and resistance are known, the amount of current is found by using $I = E \div R$; when the voltage and current are known, the resistance is found by using $R = E \div I$. Some practical examples are given as follows:

1. A headlight has a resistance of 4 ohms. When it is connected to a 12-volt battery, how much current will it draw?

   $I = E \div R; I = 12 \div 4; I = 3$ *amperes*

2. A 12-volt battery delivers 100 amperes to a starting motor. What is the total resistance of the starting circuit?

   $R = E \div I; R = 12 \div 100; R = .12$ *ohms*

3. A poorly connected battery cable has a resistance of 1 ohm. How much voltage will be required to push 300 amperes through this bad connection?

   $E = I \times R; E = 300 \times 1; E = 300$ *volts*

Application of Principle

1. Voltmeters, ammeters, and ohmmeters can be used to measure electrical conditions in circuits. An ohmmeter is used to measure the resistance of an open circuit. A voltmeter is used to measure the voltage drop between two points in a closed circuit and the total circuit voltage. An ammeter is used to measure current flow in a closed circuit.
2. A proper meter should be used to determine sources of resistance in the starting circuit of an automobile, including (a) corroded terminals; (b) broken insulation; and (c) frayed or broken wires.

3. Determine the resistances of resistors by reading the color codes and checking with an ohmmeter.

Selected References

Note: The numbers in parentheses in this section refer to entries in the list of selected references that appear within this publication immediately after the text.

(13), pp. 490-91; *(26)*, pp. 299-303; *(27)*, p. 473; *(33)*, pp. 36-38; *(47)*, pp. 31-32; *(58)*, pp. 15-59; *(62)*, pp. 15-16; *(65)*, pp. 70-95; *(86)*, pp. 53-71.

Series and Parallel Circuits

Electrons move (current flows) from a high-potential point (excess of electrons) to a low-potential point (deficiency of electrons). The path or paths followed by the electrons or current is called the electric circuit. All circuits must contain a source of electromotive force to bring about the difference of potential that causes electrons to move (current to flow). This source may be an electric cell, a mechanical generator, or another device that provides electric power. All paths of the circuit lead from the high-potential (negative) end of the electromotive source to its low-potential (positive) end.

The electrons (or current) in a circuit follow paths provided by solid conductors, liquids, gases, vacuums, or any combinations of these. Its path may include electric lights, heaters, motors, or any other of the many devices requiring electricity.

The three general types of electric circuits are (1) the series circuit, which provides a single, continuous path for electrons to move (current to flow) from the negative side of the electromotive-force source to the positive side; (2) the parallel circuit, which provides two or more parallel paths for electron movement (current flow) from negative to positive; and (3) the series-parallel circuit, a combination of the other two.

Scientific Principle Involved:
Direct-Current Circuit

In a series circuit the current flow is the same in all parts of the circuit; the total resistance is equal to the sum of the individual resistances; and voltage is equal to the sum of the potential differences across each of the individual resistances. In a parallel circuit the voltage is the same across all resistances; the total current is equal to the sum of the currents through its branches; and the total resistance is equal to the voltage across the resistances divided by the total current in the circuit.

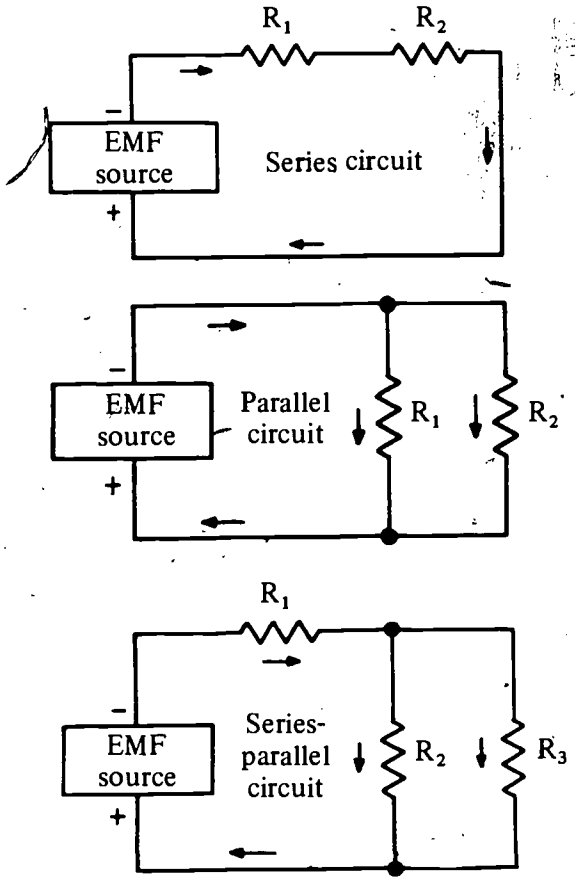

Electrons move from the negative side of the power source (EMF) through the resistances and back to the positive side of the source. In the series circuit the electrons move through resistors R^1 and R^2 (load); in the parallel circuit, through R^1 and R^2; and in the series-parallel circuit, through R^1 (in series) and then through R^2 and R^3 (in parallel).

Application of Principle

1. Trace, check, and measure circuits in electrical systems and devices.
2. Hook up series, parallel, and series-parallel circuits by using lengths of wire and light bulbs or other resistances to prove the relationships between voltage, current, and resistance in these circuits.

Selected References

Note: The numbers in parentheses in this section refer to entries in the list of selected references that appear within this publication immediately after the text.

(13), pp. 493-94; *(19)*, pp. 19-22; *(26)*, p. 303; *(27)*, pp. 454-91; *(33)*, pp. 44-49; *(47)*, pp. 40-48; *(62)*, pp. 21-46; *(65)*, pp. 114-19; *(66)*, pp. 152-53; *(86)*, pp. 55-57.

Unit 25 — TRANSFORMERS

Transformers are most often used where electrical voltage needs to be either increased or decreased. Power transformers used to increase or decrease voltage are classified as step-up or step-down transformers. A very common application of a step-down transformer can be found in the model train transformer or the doorbell transformer, where the 120-volt alternating current used in home electrical circuits is reduced from 8 to 24 volts. An example of a step-up transformer used to increase voltage is the transformer connected to a neon sign which will increase 120 volts to the several thousand volts necessary for the operation of the sign. Many electronic devices, such as radios, stereos, tape recorders, and television sets, use power transformers to increase or decrease voltage to the desired amounts.

Power transformers consist of two or more coils of wire wound around a laminated metal core. The winding carrying the current from the source of electrical power is called the primary winding. The other winding or windings which carry the induced voltage are called secondary windings. A transformer may have one or more secondary coils which step up or step down the voltage.

The two leads of the primary winding are connected to the source of power, which must be an alternating current or an interrupted direct current. The current through the secondary coil or coils is known as the induced current, and its voltage is known as the induced voltage. If the number of turns of wire in the secondary coil equals the number of turns in the primary coil, the induced voltage will be the same as the voltage applied to the primary coil. If the number of turns in the secondary coil is less than the number in the primary coil, the voltage will be reduced; and if the number of turns in the secondary coil is greater than the number in the primary coil, the voltage will be increased. Thus, the ratio of the voltage induced in the secondary coil or coils to the voltage applied to the primary coil is the same as the ratio of the number of turns of wire in the secondary coil to the number in the primary coil.

Scientific Principle Involved: Electromagnetic Induction

An electric current flowing in a wire produces a magnetic field around the wire; the greater the movement of electrons, the greater is the strength of the magnetic field. A coil of insulated wire carrying an electric current becomes an electromagnet whose strength is determined in direct proportion to the amount of current and the number of turns of wire in the coil. Using a permeable steel core also greatly increases the strength of the electromagnet because the core itself becomes a strong temporary magnet. Reversing the movement of electrons in the coil reverses the magnetic field of the coil.

Moving a magnet perpendicular to a wire produces the movement of electrons along the wire. Moving a magnetic field through a coil of wire induces an electromotive force in the coil. The strength of the electromotive force is in direct proportion to the rate of change of the magnetic field and to the number of turns of the coil. Reversing the magnetic field reverses the direction of the induced voltage.

In a power transformer the changing magnetic field that is produced by the alternating current in the primary induces an alternating electromotive force of the same frequency in the secondary. Since the rate of change of magnetic flux is the same for both the primary and secondary windings, the voltage ratio is the same as the ratio of turns of wire in the coils.

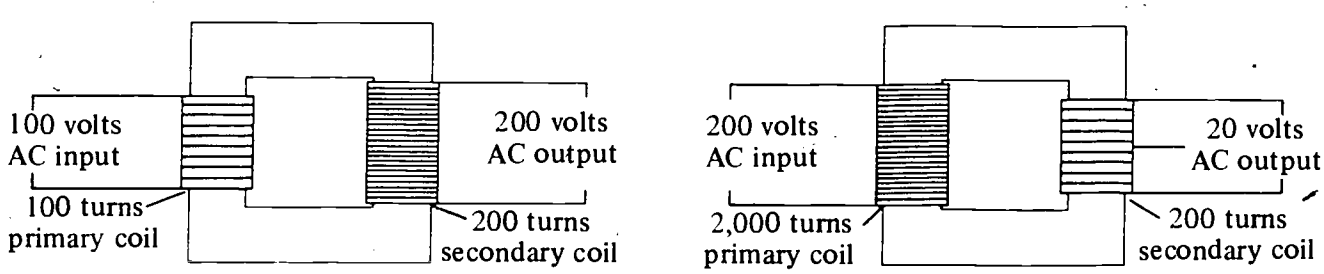

The step-up transformer (left) and the step-down transformer (right) show the direct relationship of the number of turns of the coils to the voltage.

In an ignition coil of an automobile, the voltage (6 or 12 volts) of the storage battery is transformed or stepped up to the high voltage required to make the current jump the spark-plug gap. The ignition coil has a primary circuit made up of a winding of a few hundred turns of relatively heavy wire and a secondary circuit made up of a winding of many thousands of turns of fine wire. When the distributor contact points close and current flows in the primary circuit, a magnetic field builds up. When the distributor contact points open and the current stops flowing, the magnetic field collapses. The collapsing magnetic field induces high voltage in the secondary winding. This induction creates the high-voltage surge that is conducted through the distributor rotor and cap to a spark plug.

The increase in voltage in the step-up transformer and the automobile ignition coil is accompanied by a corresponding decrease in current so that the power output (volts X amperes) cannot be greater than the power input. These devices are highly efficient (95 percent or better) since losses of energy are relatively small in the form of heat due to resistance of the windings, eddy currents, and hysteresis in the laminated and highly permeable core.

Application of Principle

1. Electromagnetic induction can be demonstrated by connecting a coil of wire to a galvanometer and moving a permanent magnet past or through the coil of wire. Induced voltage increases as the speed of the magnet is increased, and the direction of current flow (indicated by the deflection of the needle) changes as the direction of the magnet is changed.
2. A graphic illustration of how an electromagnet will develop a magnetic field can be obtained by connecting the ignition coil of an automobile to a battery and the high tension lead to a spark plug. A spark appears at the spark-plug gap as the flow of electricity is interrupted. An automotive ignition capacitor placed across the switch changes the spark as it arcs the gap. This change demonstrates an increase in voltage.
3. The following procedure can be used to illustrate a decrease in voltage: first, connect a doorbell transformer to the ordinary 120-volt house current; then connect a voltmeter across the output terminals and observe the voltage, which should be approximately 15 volts (depending on the specific transformer used).

Selected References

Note: The numbers in parentheses in this section refer to entries in the list of selected references that appear within this publication immediately after the text.

(4), pp. 82-85, 104; *(12)*, p. 379; *(13)*, pp. 491-93; *(15)*, pp. 13-22; *(22)*, p.239; *(25)*, p. 200; *(26)*, pp. 324-29; *(27)*, pp. 559-60; *(33)*, pp. 91-98; *(36)*, pp. 56, 92, 102-3; *(47)*, pp. 337-52; *(53)*, pp. 85-88; *(54)*, pp. 325-27; *(65)*, pp. 135-49; *(66)*, p. 53; *(69)*, Chapter 3, p.3.

Unit 26 — SPARK PLUGS

Spark plugs, which produce high-voltage sparks to ignite combustible fuel mixtures, are found in devices such as furnaces, heating units of steam cleaners, and internal-combustion engines. The spark plug consists of a steel shell in which is fastened a porcelain insulator. (An insulator is a nonconductor, a material through which electricity will not pass.) An electrode runs through the center of this insulator and another electrode extends out from the bottom of the steel shell to a position close to the center electrode. When the spark plug is used in the ignition system of an automobile, the shell is screwed into the cylinder head, and the wire from the distributor is connected to the top of the center electrode. The electricity (the voltage boosted by the coil) travels down the center electode and jumps the gap to the other electrode. Then it travels to the engine block and back to the coil through "ground." The fuel mixture is ignited when the electric spark jumps the gap between the electrodes at the proper time near the end of the compression stroke.

Spark plugs are classified according to a heat range which indicates their ability to transfer heat from the firing tip of the insulator to the cooling system of the engine. The rate of heat transfer is controlled basically by the distance the heat must travel to reach the cooling medium. A "cold" plug, which has a relatively short insulator nose, transfers heat very rapidly into the engine's cooling

system. Such a plug is used in heavy-duty or continuous, high-speed operation to avoid overheating. A "hot" plug, which has a much longer insulator nose, transfers heat more slowly away from its firing end. Thus it runs hotter and burns off combustion deposits which might tend to foul the plug during prolonged idle or low speed operation. Because the operating temperatures of spark plugs vary in different engines and under different engine service conditions, the plugs are made in several heat ranges.

Scientific Principle Involved: Ionization of Gases

Dry air at atmospheric or higher pressures is such a poor conductor of electricity that it can for practical purposes be considered an insulator for low voltages. The atoms that compose the molecules of any gas occasionally lose an electron and become positive ions. Thus, there are always a few positive ions and free electrons present in the air. A higher percentage of these electrically charged particles is normally present in heated gases, such as the compressed fuel-air mixture in the combustion chamber of a gasoline engine. The high voltage of the ignition coil produces strong electrical forces on the electrically charged particles in the gap between the electrodes. Free electrons accelerating rapidly toward the positive electrode collide with molecules of the gases, causing further ionization and a movement of electrons across the gap. Rapid interactions among the ions and molecules of the gases result in the release of heat, light, and sound energy in a spark discharge similar, but on a smaller scale, to the discharge of lightning between a cloud and the earth. This energy released in the gap of the spark plug is sufficient to ignite the fuel-air mixture in the combusion chamber.

Application of Principle

Compare the test results obtained on a spark plug cleaning and testing machine, using a new and a used spark plug. Remove, test, clean, and reinstall spark plugs according to the procedures that follow:

1. Loosen the plugs for one or two turns with a spark-plug wrench or a deep-socket wrench.
2. Blow the dirt out of spark-plug ports.
3. Remove the plugs the rest of the way, keeping them in their respective order.
4. Analyze visually the condition of the spark plug (normal, oil-fouled, too hot, too cold).
5. Clean the exterior of the plugs in solvent to remove grease and dirt. Allow to dry.
6. Clean with the spark plug cleaning machine.
7. Open the spark-plug electrode gap and file the electrodes to obtain clean, bright sparking surfaces.
8. Reset the spark-plug gap to proper specifications, using the wire-type gauge and bending the side electrode only.
9. Use a spark plug cleaning and testing machine. Compare sparking efficiency with a new plug.
10. Place the spark plugs (with new gaskets) back in the engine, tightening them to the recommended torque.

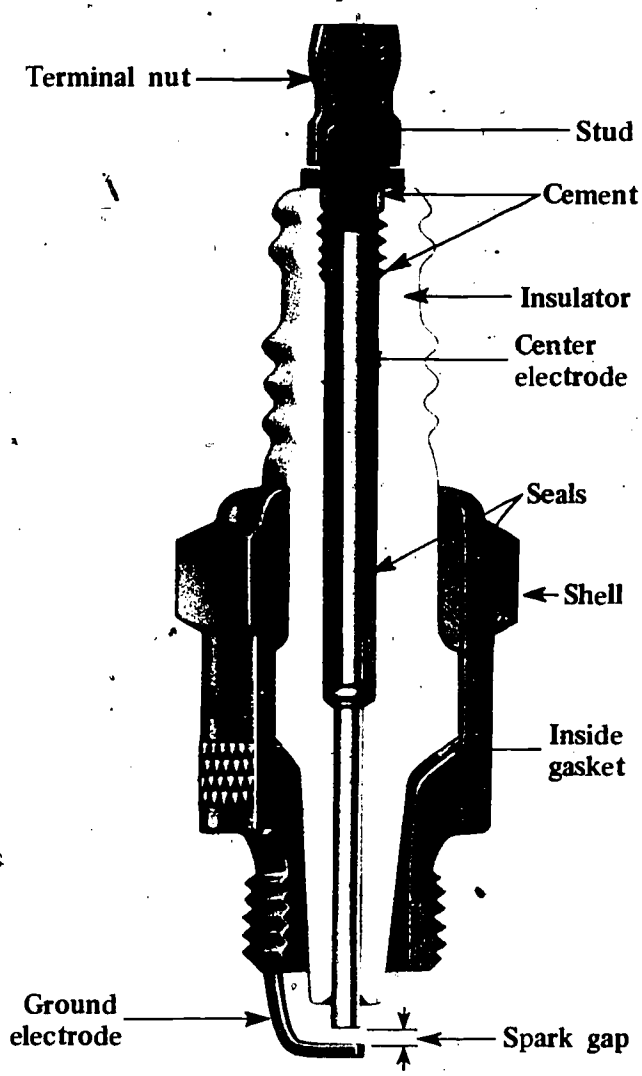

It is essential that the spark plugs be the right type for the engine in which they are used (Champion Spark Plug Company, Toledo, Ohio).

Selected References

Note: The numbers in parentheses in this section refer to entries in the list of selected references that appear within this publication immediately after the text.

(2), pp. 1-35; *(4)*, pp. 80-81; *(22)*, pp. 237-38, 386-88; *(27)*, pp.441-42; *(47)*, p. 25; *(56)*, p. 40; *(66)*, pp. 60-61; *(69)*, Chapter 3, pp. 9-12; *(75)*, Chapter 35, pp. 15-23; *(78)*, pp. 336-38; *(81)*, pp. 285-92.

Unit 27 — IGNITION SYSTEMS

The purpose of the ignition system is to develop and deliver high-voltage electricity so that the spark plugs in the engine cylinders can deliver a high-voltage spark to ignite the air and gasoline mixture at the proper time. The ignition system consists of a battery, ignition switch, ignition coil, distributor, spark plugs, and wiring.

The very high voltage needed to jump the gap of the spark plugs is obtained from the ignition coil. This coil is a step-up transformer that steps up the voltage to over 20,000 volts. The battery supplies the voltage to the primary circuit of the ignition coil. However, since pure direct current cannot be used to induce a voltage in the secondary of a transformer, it is necessary to start and stop the battery current.

The starting and stopping or opening and closing of the primary circuit of the ignition coil is done by the distributor, which is usually driven by the engine camshaft. The distributor has a set of contact points that are opened and closed by a rotating cam which has the same number of lobes as the engine has cylinders. The camshaft, which is driven by the engine, rotates at one half the speed of the crankshaft. This opening and closing of the contact points by the cam starts and stops the current flow in the primary of the ignition coil so that voltage is induced into the secondary coil. A capacitor (condenser) is placed across the points to prevent the burning of the contact points and to reduce arcing.

The distributor delivers the high voltage produced by the secondary of the ignition coil to the correct spark plug at the proper time. This delivery is accomplished by the rotor in the distributor. The rotor attached to the distributor shaft is connected directly to the output of the ignition coil. As the rotor turns in the distributor, it moves from one contact point to the next in the distributor cap. Each of the contacts in the cap is connected by a high-tension cable to a different spark plug. Thus, as the rotor turns, it distributes the high-voltage surges first to one spark plug, then to another, and so on, according to the engine firing order.

High-compression engines require a higher voltage at high speeds for efficient ignition of the fuel. In the conventional system the points open and close quickly, and the primary coil does not have time to build up to a very high voltage. Other defects found in this system are the limited life of the points and capacitor, along with the maintenance necessary to keep these units in working condition.

The transistorized ignition system eliminates these defects and provides far more dependable service than could be obtained from the conventional system. The transistor, which is capable of handling large amounts of current, switches the primary circuit on and off so that the points carry only a very small current. Since the points carry

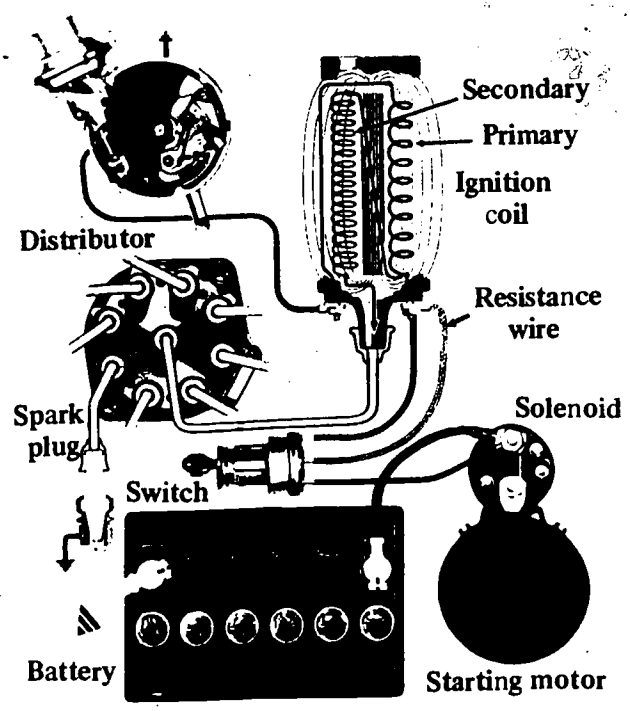

The ignition coil in a typical ignition circuit is shown schematically, with the magnetic lines of force indicated (Delco-Remy Division, General Motors Corp.).

such a small portion of the total current, arcing between them is eliminated and a capacitor is not required. However, a special coil with a higher turns ratio and current rating must be used.

Some transistorized ignition systems do not use a contact point in the primary circuit. Instead, a magnetic pickup coil is used to time the transistor current flow for the primary circuit. A permanent magnet ring is mounted on the top of the distributor shaft. This magnet has the same number of teeth as there are cylinders in the engine. Inside of the permanent magnet is a pickup coil that is wound around a steel core, which also has teeth. Each time the teeth align, the magnetic lines of force from the permanent magnet cut through the turns of wire in the pickup coil. This activity produces the same effect in the primary circuit as does the opening of the contact points. The specialized transistorized circuit connected to the pickup coil acts as a current amplifier and switch to turn the primary coil circuit off and on.

Scientific Principle Involved: Electromagnetic Energy

When the primary circuit of the ignition coil is interrupted by the opening of the points in the distributor, the magnetic field produced in the core of the ignition coil collapses rapidly. The change in flux induces a high electromotive force in the secondary winding, whose voltage ratio, compared to the voltage of the primary, is the same as the ratio of the number of turns in the secondary winding to the number of turns in the primary.

The capacitor (condenser) consists of two conducting plates separated by an electrical insulator, usually two strips of metal foil separated by wax paper wound into a roll. It operates on the principle that an electrical charge placed on one plate of the conductor induces an opposite charge in the other plate, which is connected to ground. These opposite charges on the plates [illegible] each other so that additional charges can be added to the charging plate. When the primary current to the induction coil is interrupted, the collapsing magnetic field induces a current in the primary winding as well as in the secondary. Rather than arc across the points, the primary current charges the capacitor. The capacitor then discharges back through the primary coil when the points are again on the make.

The high voltage on the center electrode of the spark plug produces a high rate of ionization of the gases in the fuel-air mixture in the combusion chamber. Sufficient force is supplied to the charged particles (ions) by the electric field to produce enough energy in the spark discharge across the gap to ignite the mixture, producing heat energy in the expanding gases as a result of the chemical reaction in the burning fuel.

The magnetic pickup coil used in some transistorized ignition circuits operates on the principle of electromagnetic induction, which produces an electromotive force whenever the flux through the coil changes. However, since this current is relatively small, timed voltage pulses are used to vary the bias on the transistor base to control the amplitude of the current through the primary circuit.

Ignition systems used on internal-combusion engines may be categorized as (1) the hot-tube or glow-plug types used on model airplane and diesel engines; (2) the magneto type; (3) the transistorized ignition; (4) the capacitor-discharge type; (5) the pulse pickup type; and (6) the conventional automotive-type ignition system. There are many other applications for ignition systems which employ the same basic principle; an example is the ignition system used for automatically fired gas furnaces, heaters, or steam cleaners.

Application of Principle

The students can do the following things:

1. Measure the voltage in the primary cirucit (approximately 6 to 12 volts in the automobile) and compare it to the measured secondary voltage (approximately 25 to 30 thousand volts, as measured with an oscilloscope).
2. Measure the voltage in as many ignition systems as are available and compare their primary and secondary voltages.
3. Measure the amperage flowing in the primary and secondary circuits of the conventional, transistorized, and magneto-ignition systems. Compare the amperage flowing in the primary of each system and discuss the implications of this comparison.
4. Demonstrate glow-plug ignition by connecting a model airplane glow plug to a 6-volt battery and observing the small coil of wire as it becomes red hot.
5. Examine and repair various ignition systems and their individual components.

Selected References

Note: The numbers in parentheses in this section refer to entries in the list of selected references that appear within this publication immediately after the text.

(4), pp. 80-95; *(12)*, pp. 436-43; *(15)*, pp. 15-22; *(16)*, pp. 249-53; *(19)*, pp. 397-429, 461-64; *(22)*, pp. 233-43; *(26)*, pp. 112-13, 117, 163-65; *(27)*, pp. 620-24; *(33)*, pp. 268-79; *(36)*, p. 110; *(47)*, pp. 353-54; *(66)*, pp. 99-101, 111; *(81)*, pp. 243-311.

Unit 28 — ELECTRIC MOTORS

An electric motor is a device that converts electrical energy into mechanical energy. Because of its ease of operation, efficiency, convenience, and economy of operation, it is used extensively in industry, in business, in the home, and in the automobile. Electric motors range in size from very small motors used to run electric clocks to very large motors used to operate industrial conveyor-belt systems.

Electric motors have a variety of characteristics, each of which is selected to meet the requirements that it must fulfill. The automobile has several different types of direct-current motors. One starts (cranks) the engine, another operates the blower of the heating/refrigeration system, and another raises and lowers the windows.

The motor used to start the engine in an automobile is a series-wound motor in which the field coils are connected in series with the armature coils. Series-wound motors have the advantage of developing a tremendous torque, which is essential when starting an automobile engine. Shunt-wound motors, which have the field coil connected in parallel with the armature coil, are used where constant speed is desired, such as for blowers. Another direct-current motor is called a compound-wound motor since it has one field coil in series with the armature and another in parallel with it. The compound-wound motor combines the starting torque of the series-wound motor with the constant speed of the shunt-wound motor. A rheostat is used to control the current flow in order to vary the speed of a direct-current motor.

The alternating-current motor is used extensively in the home and in industry, where alternating current is readily available. Alternating-current motors are usually classified as induction, universal, and synchronous motors.

The induction motor is the most common type used to operate industrial equipment such as drill presses, lathes, and grinders. Household equipment, such as washing machines, dryers, refrigerators, and disposals also uses induction motors. These motors are trouble-free and do not use the commutators or brushes found in direct-current motors. Induction motors require a starting system in order to get them rotating. There are a number of different systems used for this purpose. One of the most common methods of starting an induction motor is through the use of two sets of stationary windings. One winding is called the running winding and the other the starting winding. The starting winding is automatically disconnected from the circuit after the motor is in motion.

The universal motor is used where variable speeds are desired; it can be found in electric mixers and sewing machines. A rheostat is used to control the speed of a universal motor. The synchronous motor is used where constant speed is desired. The electric clock, which uses a synchronous motor, has a stator and a rotor with multiple poles.

Scientific Principle Involved: Electromagnetic Induction

An electric current flowing in a wire produces a magnetic field around the wire. If the wire is placed at right angles to a magnetic field, the interaction of the two magnetic fields produces a force on the wire, tending to move the force across the magnetic field. The amount of the force is directly proportional to the strength of current in the wire, the strength of the magnetic field in which it is placed, and the length of the wire. The direction of the force is determined by the direction of the movement of the electrons in the wire and the direction of the magnetic field in which the wire is placed. This interaction between magnetic fields is the underlying principle for the operation of all electric motors, where the attractions and repulsions between the magnetic fields of the armature (rotor) windings and the field (stator) produce the torque which turns the motor. The torque of the motor depends on the strength of the current, the number of windings in the armature, the number of turns in each winding, and the

strength of current and number of turns in the field coils. All direct-current motors utilize a commutator and brushes to change the direction of current flow in the armature coils at just the right instant during the cycle in order to maintain the rotation. Direct-current motors may be reversed in the direction of rotation by reversing the current in either the armature or in the field windings, but not in both. The series-wound direct-current motor can be operated on alternating current because both the armature and the field windings change polarity simultaneously in step with the alternations in the current.

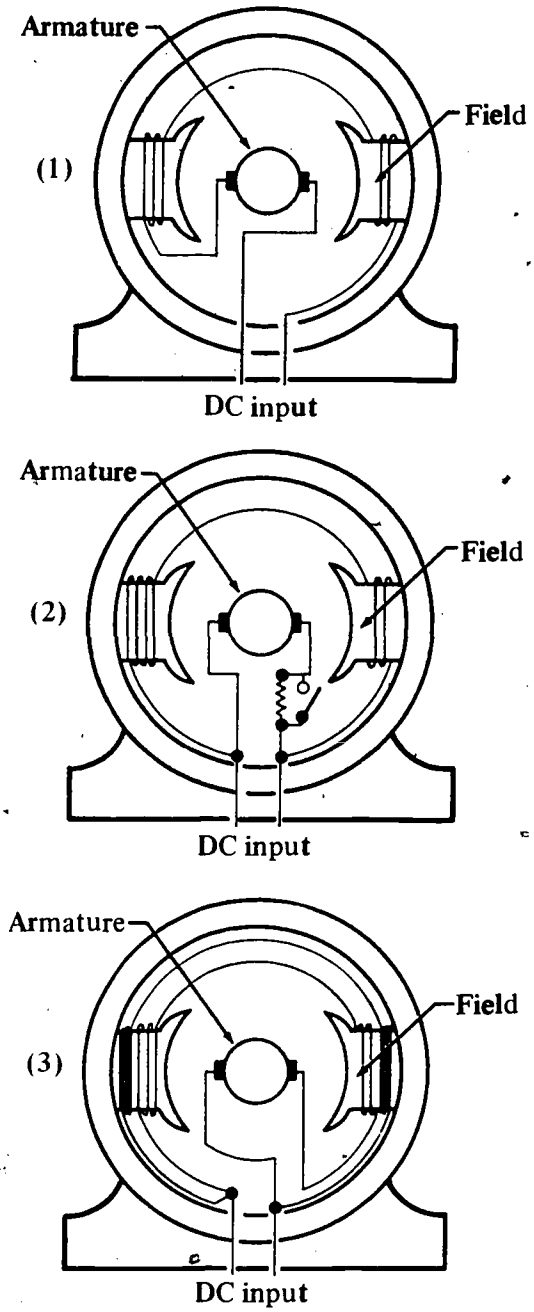

The diagrams show the wiring of (1) a direct-current series-wound motor; (2) a direct-current shunt-wound motor; and (3) a direct-current compound-wound motor.

The induction motor operates on alternating current only because the motor depends on the alternating magnetic field produced by the current in the stator to induce an alternating current in the rotor conductors. The current induced in the rotor is opposite in direction to the stator current; therefore, their fields are in direct opposition to each other. However, since a torque is necessary to produce rotation, the starting coil must have a current which is out of phase with the stator current. This change of phase of the stator coil is accomplished by either a capacitor or an induction coil, which causes the current to either lead or lag the impressed voltage. When the rotor approaches near-synchronous speed, the stator current is interrupted, and the alternations in the main stator coil which are out of phase with the induced current in the rotor will continue to supply torque to maintain the rotor at near-synchronous speed. The synchronous motor is a constant-speed motor because its speed of rotation is determined by the frequency (cycles per second) of the alternating-current power supplied to the stator and the number of poles on the rotor, in accordance with the formula $rpm = f \times 120 \div p$, where f = frequency of alternating current in cycles per second and p = number of poles.

Variable speeds are obtained in direct-current and universal alternating-current/direct-current motors by controlling the amount of current with a rheostat.

Since the electric motor is similar in construction to the electric generator, the rotating motor produces a current which opposes that being supplied to the motor. This opposition accounts for the fact that more current is required for starting an electric motor than for operating it at its designed speed.

Application of Principle

1. Laboratory activities involving all of the various types of electric motors would be virtually impossible. However, a list could be made identifying electrical motors by their type and utilization, such as AC, DC, induction, synchronous, series, shunt, and others;

and the advantages and disadvantages of each could be discussed. Skills could be applied and the understanding of technical information extended through disassembly, testing, and study of the various circuits involved.

2. A simple demonstration which indicates the relationship between the amount of current required and the load applied to the motor is obtained by connecting to a battery an internal-combustion-engine starter motor which has been removed from the engine, and measuring the amperage required by the free-running starter motor. Next, the ammeter is connected to a starter motor which is installed on an engine, the engine is started, and the amperage required to turn the starting motor now that the load of the engine has been added is noted. The two amperage readings are compared and their implications are discussed.
3. Another common application involves varying the speed of electric motors. Sewing machines, as well as automobile-heater and air-conditioning blower-motors, utilize a motor which requires a varying speed. The circuits of such motors could be analyzed and discussed, such points being discussed as the necessity for variable speed and the precise means of accomplishing such speed. The various components, such as the brushes, commutators, and rheostats, which make possible the varying of the speed of an electric motor, can be physically examined.
4. Opposed to an electric motor, which must operate at an infinite number of revolutions per minute, the synchronous motor must maintain continuous revolutions per minute. The rpm of the synchronous motor is controlled by the frequency of the alternating current and the number of poles in the motor. An example of a synchronous motor which should be examined is an electric clock.

Selected References

Note: The numbers in parentheses in this section refer to entries in the list of selected references that appear within this publication immediately after the text.

(4), pp. 120-23; *(13)*, pp. 497-98; *(22)*, pp. 205-14, 366-68; *(24)*, pp. 193-94; *(26)*, pp. 183-84; *(27)*, pp. 549-55; *(33)*, pp. 136-51; *(47)*, pp. 356-403; *(54)*, pp. 397-99; *(65)*, pp. 186-92; *(69)*, Chapter 19, pp. 31-32; *(75)*, Chapter 34, pp. 3-15; *(86)*, pp. 108-12.

Unit 29 — FUEL CELLS

Scientists are working constantly to find new methods for generating electrical power. One method that has great promise is the fuel-cell. This cell has been used to develop electrical power inside spacecraft that have carried astronauts into outer space.

Fuel cells produce a continuous flow of electricity by means of chemical action. These cells create electric energy with greater efficiency than do most other electrical generators. A fuel cell can produce electricity as long as it is fed fuel along with oxygen or air. Dry-cell batteries work on a similar principle but cannot be fed continuously with fuel.

The fuel cell consists of electrodes; an electrolyte; a fuel, such as hydrogen gas; and an oxidizing agent, such as oxygen. In the hydrogen-oxygen fuel cell, catalytic nickel is used for electrodes, and the electrolyte is potassium hydroxide. Oxygen is fed to the positive electrode and hydrogen to the negative electrode. The result of the chemical action in the cell is the production of water, which must be removed to maintain the proper electrolyte concentration. The voltage output is approximately 1 volt per fuel cell. Because of the high cost of producing a fuel cell, its use is limited at the present time.

In Gemini spacecraft the smallest active element of the fuel-cell battery is the thin individual fuel cell, which is 8 inches long and 7 inches wide. Each cell consists of an electrolyte-electrode assembly with associated components for gas distribution, current collection, heat removal, and water control. In the fuel-cell battery for the Gemini, 32 cells are series-connected to form a module. Terminal plates installed on the ends of the two outside cells in the module serve as electrical connectors for the external circuitry. Each module has its own hydrogen and coolant manifold as well as its own water-oxygen separator. Three modules containing a total of 96 single fuel cells are installed in a cylindrical container to form a compact fuel-cell

battery. The three modules are electrically independent and are connected in parallel through connections to the main electrical bus. The fuel-cell batteries may also be connected in parallel with the reentry batteries. Fuel cells are highly efficient; they have an overall thermal efficiency of more than 50 percent. They are capable of producing more electricity per pound of fuel than all but nuclear devices. The fuel-cell batteries are silent, fumeless, and operable without moving parts.

Scientific Principle Involved: Electrochemical Effect

The fuel cell is an electrochemical cell in which the energy of the chemical reaction between oxygen and a gaseous fuel such as hydrogen, natural gas, or carbon monoxide is converted directly into low-voltage, direct-current electrical energy. In the hydrogen-oxygen cell, hydrogen gas passes through the porous nickel electrodes and reacts with the hydroxide ions of the electrolyte. This reaction forms water and gives up electrons to the electrode. When an external circuit is completed to the oxygen-fed electrode, these electrons move to this electrode and enter into the chemical reaction, where the oxygen reacts with water to form negatively charged hydroxide ions. These ions replace those which were used up at the hydrogen-fed electrode. The net result of these reactions is the combination of hydrogen and oxygen to form water in the cell and the movement of electrons from the hydrogen-fed cathode to the oxygen-fed anode. In addition to acting as an electrical conductor, the porous nickel in the electrodes serves as a catalyst by breaking down molecules of the hydrogen and oxygen gases into separate atoms, helping to speed up the chemical reactions at the electrodes. Since the electrodes do not enter into the chemical reaction in this cell, they do not deteriorate as in the conventional electrochemical cell.

In Gemini spacecraft, ion-exchange membrane fuel cells convert the energy of the chemical reaction of hydrogen and oxygen directly into electricity. Unlike conventional batteries, fuel-cell batteries will continue to operate as long as hydrogen and oxygen are fed from an external source. The structure of the fuel cell contains an anode and cathode, which are in contact with a solid plastic electrolyte (ion-exchange membrane) that permits the exchange of hydrogen ions between electrodes. In the presence of a metallic catalyst, hydrogen gives up electrons to the load (where they do useful work as an electric current) while releasing hydrogen ions, which migrate across the electrolyte to the cathode. There the ions combine with oxygen and electrons from the load circuit to produce water, which is carried off by wicks to a collection point. Ribbed metal current-carriers are in contact with both sides of the electrodes to conduct the produced electricity. The fuel batteries and the fuel and oxidant supply are located in the spacecraft-equipment section. Total consumption is approximately 0.9 pound per kilowatt hour. Fuel and reactant flow is regulated to delivery pressure by a dual pressure regulator and relief valve. By-product water from the fuel-

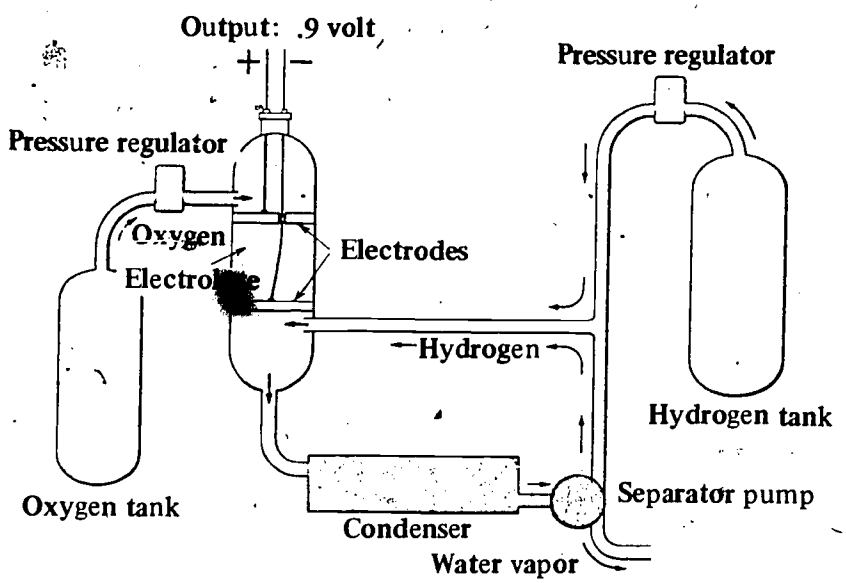

The hydrogen-oxygen fuel cell uses catalytic nickel electrodes and an electrolyte of potassium hydroxide.

cell battery provides a pressure reference for the reactant gases.

Application of Principle

Fuel cells are classified as one of the more exotic power sources in use today. Most of the fuel cells produced are used for scientific experimentation and military or specialized industrial applications. One source of information concerning laboratory activities relating to various types of fuel cells is contained in the laboratory manual (pp. 135-40) for the following book, which was written by Joseph W. Duffy: *Power: Prime Mover of Technology* (First edition). Bloomington, Ill.: McKnight & McKnight Publishing Co., 1964.

Selected References

Note: The numbers in parentheses in this section refer to entries in the list of selected references that appear within this publication immediately after the text.

(26), pp. 331, 336-39; *(27)*, pp. 468-69; *(36)*, pp. 82-85; *(64)*, p. 81; *(66)*, pp. 186-89.

Unit 30 — PHOTOELECTRIC CELLS

Some modern automobiles have automatic headlight dimmers and automatic light switches. These devices are operated by a photoelectric cell, which is used to convert radiant energy into a flow of electric current.

The first photoelectric cells used the photoelectric vacuum tube as the control device. The photoelectric tube can provide electric current for operating devices that will turn on burglar alarms, open doors, ~~pick up~~ sound in the sound motion-picture projectors, and control a variety of devices. Certain materials (such as potassium, sodium, selenium, and cesium) will give off small quantities of electrons when held in ordinary light. When light is focused on the material in the vacuum tube, a positive anode will attract the electrons which are emitted. The current flow in the phototube, which is very small, is usually increased by an amplifier. The output of the amplifier can be connected to a relay that will turn a circuit on or off.

Most present-day photoelectric cells use solid-state materials in which a small voltage can be produced when light shines on the material. These solar cells, called photovoltaic cells, use two types of material which generate a voltage at a junction between the material when light shines on the surface. A good example of such a device is the light meter used in photographic meters where the output of the cell is connected to a sensitive galvanometer. The stronger the light, the greater is the voltage produced by the cell. The increase or decrease of the cell voltage is determined by reading the needle movement in the galvanometer.

The automatic headlight switch used in the automobile turns the car lights on or off according to the light level. As evening approaches and daylight is reduced to the point where lights are needed, the photoelectric cell turns the car lights on. The photoelectric cell, which is mounted behind the windshield, is exposed to the light. This cell is connected to a transistor amplifier circuit which operates a sensitive relay. This relay is connected to a power relay that turns on the car lighting system.

Scientific Principle Involved: Photoelectric Effect

Photoelectric devices depend on the absorption of incident light (infrared through ultraviolet) by electrons in the sensitive material to alter the electric characteristics of the material. According to the quantum theory of light, photons are the small bundles of energy or quanta associated with light radiation. Since the energy of the photon depends on the frequency of the light wave, photons of ultraviolet light (higher frequency) have more energy than visible and infrared light. When an electron in a material absorbs a photon of radiant energy, it may be released from its bonds within the material, and its energy of motion will depend on how much energy it absorbs from the

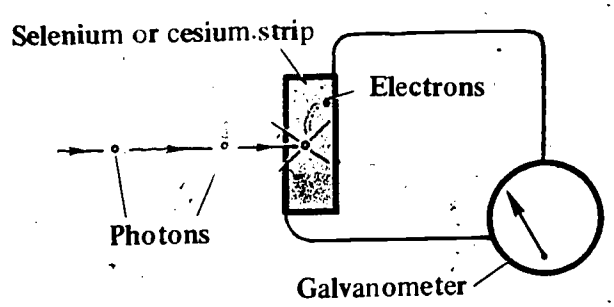

Light falling on certain metals, such as selenium or cesium, produces an electric current.

photon and how much of that energy was used in breaking the bonds. The magnitude of the photoelectric effect is determined by the intensity (number of photons) of radiation absorbed.

In the vacuum or gas-filled phototube, the sensitive element (cathode) is coated with a metal, such as potassium or cesium, which emits electrons from the surface when subjected to incident light. These photoelectrons are accelerated toward a positive anode in the same way as in the conventional electron tube.

Photocells which use a single semiconducting material, such as selenium or cadmium sulfide, depend on the photoelectric effect to produce pairs of free electrons and positive holes within the material. This increase in the number of free electrons and positive holes results in the proportional increase of conductance of the cell in the battery-powered circuit.

Photovoltaic cells, such as the solar cell, use two different semiconducting materials in contact with each other to form an N-P barrier. In the N-type material, such as selenium- silicon, conduction is due to excess free electrons; in the P-type material, such as boron-silicon, conduction is due to the excess positive holes. This separation of electrical charges produces an electrical field across the barrier. When light is absorbed at the barrier region, new pairs of free electrons and positive holes are produced by the photoelectric effect. The increase in the number of free electrons in the P-type material allows the more energetic electrons to move across the barrier into the N-type material, where they are free to move and deliver electrical power in the external circuit.

Application of Principle

1. Demonstrate the characteristics of photovoltaic cells by connecting a cell (silicon, selenium, or the like) to a milliammeter. Expose the cell to ordinary light and observe the action of the milliammeter (0-1). Vary the intensity of the light and note the meter readings also vary in direct proportion to the intensity of light striking the photovoltaic cell.
2. Use an ordinary lightmeter to measure the available light when taking photographs. Record the readings as the meter is exposed to direct and indirect light in varying degrees. Also note the change in the meter reading as the color of the subject or background changes.

Selected References

Note: The numbers in parentheses in this section refer to entries in the list of selected references that appear within this publication immediately after the text.

(9), p. 152; *(13)*, pp. 576, 577; *(16)*, pp. 307-8; *(26)*, pp. 339-42; *(27)*, pp. 333-34, 352, 458; *(33)*, pp. 27, 281-83; *(37)*, p. 513; *(47)*, pp. 39, 253-57, 405, 459; *(54)*, pp. 431, 448; *(65)*, pp. 64-65; *(86)*, p. 7.

Unit 31 — SEMICONDUCTOR POWER RECTIFIERS

In certain electronic circuits it is desirable to convert alternating current into direct current. Such devices as radio receivers, television sets, stereos, and tape recorders all require a source of direct current. To obtain the necessary direct current from an alternating-current power source, each of these pieces of equipment uses a rectifier. The rectifier changes the alternating current into direct current.

In the modern automobile the alternating-current generator, called an alternator, also must have the alternating-current output rectified to direct current so that the storage battery can be kept charged. With the increased electrical demands in the automobile, the alternator is replacing the direct-current generator because of its efficiency and generating capabilities at low speeds.

Vacuum tubes can be used as rectifiers, but in many devices they are being replaced by solid-state semiconductors. These semiconductors, called diodes, will permit current to flow through the conducting material quite easily in one direction. When the current is reversed, the semiconductor offers a great deal of resistance to the flow of current. Thus, the semiconductor diode will permit current to flow in one direction only; and when connected in an alternating-current circuit, the output from the diode is direct current.

The early semiconductor power rectifiers – copper oxide, copper sulfide, and selenium – were known as dry rectifiers. At the present time germanium or silicon are being used for solid-state rectifiers, which are usually mounted in the slip-ring end of the alternator.

When a single diode is used as a rectifier in an alternating-current circuit, the output, after passing through the diode, will be pulses of direct current. Direct current will flow only during half of the alternating-current cycle since the diode will permit current flow in one direction only. So that a much smoother direct current can be obtained, it is possible to design a circuit, called a full-wave rectifier that will rectify both halves of the alternating cycle. The output provides a much smoother flow of current since two pulses of direct current are produced for each cycle of alternating current. Such a circuit, called a bridge-rectifier system, uses four diodes.

In the automobile it is very desirable to have a fairly smooth direct current for charging purposes. Three stator windings are, therefore, [illegible] the alternator and are connected in [illegible] "Y" connection or a "delta" connection. This arrangement enables the generator to produce a three-phase alternating current which provides overlapping cycles of alternating current. The output of the three-phase current is connected to six solid-state diodes so that the output from the rectifiers is a fairly constant direct current. Since diodes produce heat when they are conducting current, it is necessary to use special devices called heat sinks to absorb this energy. The diodes are placed inside the alternator, and the heat sinks have large radiating surfaces to allow the heat to be radiated into the air surrounding the generator.

Scientific Principle Involved: Rectification with Semiconductors

Silicon and germanium are quite similar in their structure and chemical behavior. The atoms of both elements have four electrons bound in the same way in their respective crystals. In its transistor functions germanium is the more versatile semiconductor. Germanium acquires the diode property of rectification and the transistor property of amplification through the presence of certain impurities in the crystal structure. Two types of impurities are important; one is known as a donor, the other as an acceptor.

Arsenic and antimony are typical donor elements. When minute traces of antimony are added to germanium, each antimony atom donates one electron to the crystal structure. Four of the five electrons are paired, but the fifth electron is relatively free to wander like the free electrons of a metallic conductor. The detached electron leaves behind an antimony atom with a unit positive charge. Germanium with this type of crystal structure is called N-type, or electron-rich germanium. N-type germanium consists of germanium to which are added equal numbers of free electrons and bound positive charges so that the net charge is zero.

Atoms with three electrons, such as those of aluminum and gallium, will act as acceptors. When minute traces of aluminum are added to germanium, each aluminum atom accepts a single electron from a neighboring germanium atom, leaving a hole in the electron-bond from which the electron is acquired. This is the equivalent of a positive charge since it acts as a trap into which an electron can fall. As an electron fills the hole, it leaves another hole behind into which another electron can fall. In effect, then, the hole (positive charge) detaches itself and becomes free to move, leaving behind the aluminum atom with a unit negative charge. Germanium with this crystal structure is called P-type, or hole-rich germanium. P-type germanium consists of germanium to which is added an equal number of free positive holes and bound negative charges so that the net charge is zero.

Both P-type and N-type crystals are good conductors, and each will conduct equally well in either direction. When the two types are joined together, however, an electric barrier is established where their surfaces meet. The plane at which the P-type crystal meets the N-type crystal is called the P-N junction. The free holes of the P crystal cannot pass through the electric barrier at the P-N junction to reach the N crystal; the free electrons of the N crystal cannot cross the P-N junction to reach the P crystal.

A small potential difference impressed across the pair enables the free electrons to cross the junction

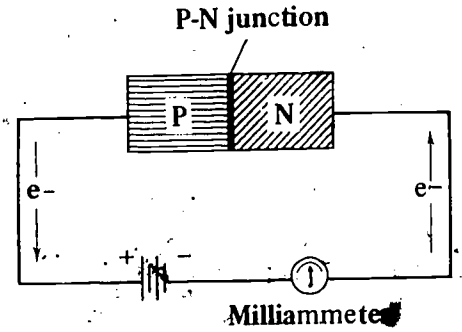

A small potential difference impressed across the P-type and N-type crystals enables the free electrons to cross the junction and pass into the P-crystal.

and pass into the P crystal. Similarly, the holes cross into the N crystal. The apparent movement of holes is in the opposite sense to the actual movement of electrons which fall in the holes of the P-type crystal. Thus, an electron movement is established across the P-N junction and in the external cirucit.

If the battery connections are reversed, the free electrons in the N crystal and the free holes of the P crystal are attracted away from the P-N junction. The junction region is left without current carriers; consequently, there is no conduction across the junction and no current in the circuit.

It is the junction which has the distinctive property of permitting electron movement in one direction with ease when a small voltage is applied in the proper sense. Thus, the P-N junction is the rectifying element of semiconductor crystals.

Application of Principle

A characteristic of solid-state rectifiers, such as the diodes used in automobile alternators, is that they will allow current to flow in one direction only. This characteristic may be demonstrated, and at the same time the diode may be checked for opens and shorts, by using an ohmmeter.

1. Select a diode, either positive or negative case, from an alternator. If a negative-case diode is selected, connect the negative lead of the ohmmeter to the case of the diode. Next, connect the positive lead of the ohmmeter to the positive lead of the diode. Reverse the connections when checking a positive-case diode. Although there may be a wide variation in the resistance of different diodes, the ohmmeter reading should be consistently above 300 ohms. If the reading is below 300 ohms, the diode has probably been shorted and should be replaced.
2. Check an open circuit in a negative-case diode by connecting the negative lead of the ohmmeter to the positive lead of the diode and the positive lead to the negative case of the diode. Reverse the connections when checking a positive-case diode. If an infinite resistance is indicated by the ohmmeter, the diode has an open circuit and should be replaced. *Note:* If the diode is good, there will be no current flow when the ohmmeter is connected as indicated previously. However, reversing the connections on the diode will cause a current to pass through the diode.

Selected References

Note: The numbers in parentheses in this section refer to entries in the list of selected references that appear within this publication immediately after the text.

(22), p. 220; *(26)*, pp. 348-49; *(27)*, pp. 621-23; *(33)*, pp. 269-70; *(47)*, pp. 433-39; *(65)*, pp. 268-70; *(75)*, Chapter 31, pp. 7-8.

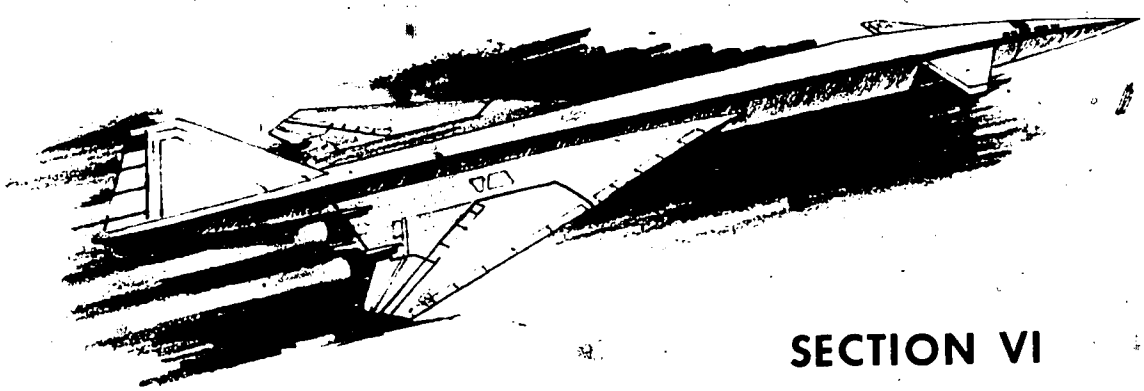

SECTION VI
HYDRAULIC POWER

Unit 32 — JACKS AND PRESSES

Through the use of hydraulics, the strength (muscle power) of a person can be multiplied thousands of times. For example, it is possible through the use of hydraulic jacks for a person to lift a part or all of a house. Hydraulic tools are used extensively in the automotive industry. Whenever a heavy force must be applied or a heavy weight lifted, a hydraulic tool has been designed to provide the means.

A hydraulic jack or press consists of large and small cylinders connected at their base by a small tube or internal passage. A piston fits into each cylinder. When a force is applied to the handle at the small piston, a pressure is developed in the small cylinder. The pressure developed depends on the area of the small piston and the force applied. This pressure is carried through the hydraulic line to the large cylinder. In this cylinder the pressure is applied to the large piston, forcing it to move.

In the simplified diagram of a hydraulic press, a lever is attached to the small piston. As the small piston is pushed down, some of the liquid from the small cylinder (1) is forced into the large cylinder (2). This pressure raises the large piston a small amount. As the lever is worked up and down, it pumps the liquid from the reservoir and forces it into the cylinder (2). When the pressure is to be

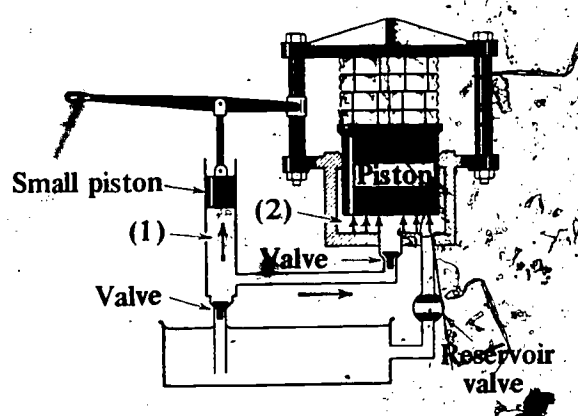

released, the reservoir valve is opened to let the liquid flow from the cylinder (2) back into the reservoir.

The force is determined by the pressure and the area of the pistons. For example, the small piston has an area of 1 square inch and is connected directly to the larger piston, which has an area of 100 square inches. If a force of 200 pounds is applied to the small piston, a pressure of 200 pounds per square inch is developed. This pressure is transmitted to the larger cylinder, which has a piston area of 100 square inches. This piston is, therefore, pushed with a force of 20,000 pounds (100 sq. in. × 200 lbs. per sq. in.) This gain in

force (from 200 to 20,000 pounds) is made at the expense of distance moved. If the small piston moved 5 inches, the large piston moved 5/100 of an inch. The output force could be doubled by decreasing the size of the small piston and cylinder to ½ square inch. However, the distance moved would be halved.

The force of 200 pounds applied to the small cylinder is easy to obtain. Most jacks, presses, and cranes have handles which are used to apply the force to the small cylinder. These handles are arranged as levers and multiply the applied force at the expense of distance. The 10-ton (20,000-pound) jack used as an example is relatively small, but 60- and 80- ton jacks are available. The output force is very high; however, movement is quite slow because of the tremendous mechanical advantage needed to multiply a 50- to 100-pound force to an 80-ton force.

Scientific Principle Involved: Pascal's Principle

A hydraulic pump or set of cylinders does not "pump" pressure. It merely produces a flow of hydraulic fluid. Pressure is generated only when a restriction or load is placed in the circuit. If the flow encounters negligible resistance, the developed pressure is negligible. As the resistance force increases, the pressure within the system produced by the pump (or cylinders) increases to meet the resistance force. The mechanical advantage produced by a set of hydraulic cylinders is equal to the ratio of the surface area of the pistons. This ratio determines the ratio of distances moved by each cylinder, another measure of the mechanical advantage.

Pressure applied anywhere on a confined liquid or gas is transmitted undiminished in every direction. The force thus exerted by the confined liquid or gas acts at right angles to every portion of the surface of the container and is equal upon equal areas (Pascal's principle).

Application of Principle

1. The mechanical advantage of hydraulic jacks can be determined by measuring and comparing the distance the small and large pistons move.
2. Different weights can be placed on the jack to show that a resistance is necessary to produce a mechanical advantage. A comparison of force applied to the weight lifted can also be calculated by operating the jack handle through a spring scale. The efficiency of the jack can be shown by a comparison of the theoretical mechanical advantage and the actual mechanical advantage.
3. Hydraulic devices can be disassembled and assembled to assist in understanding the operation of each part. The exact theoretical advantage of the hydraulic parts can be provided by the measurement of piston sizes.

Selected References

Note: The numbers in parentheses in this section refer to entries in the list of selected references that appear within this publication immediately after the text.

(6), pp. 3-6; *(27)*, pp. 200-202; *(36)*, pp. 54-60; *(69)*, Chapter 18, p.2; *(75)*, Chapter 51, pp. 4-5; *(80)*, pp. 463-72.

Unit 33 — MACHINE TOOLS

Many machine tools use hydraulic systems to control the movement of machining operations. Hydraulic systems provide rapid, accurate, and efficient control of intricate machine functions. Hydraulic power, as applied to tools and machines, relies on the principle that liquids can't be compressed. Liquids under pressure transmit the pressure throughout all parts of the fluid. This basic property allows the use of a liquid to transmit power from its source to the desired point of application by means of transmission lines (pipes or tubes).

In many applications hydraulic systems are more efficient than mechanical linkage or a train of gears. In addition, hydraulic systems are more flexible in terms of load, speed, and mechanical advantage. The basic system consists of an electric motor driving a hydraulic pump and other rotating parts of the machine. The hydraulic pump operates a hydraulic system consisting of control valves, cylinders, and gauges or sensing devices. Both vertical and horizontal motion of tables and machine platforms can be operated and controlled by the hydraulic system.

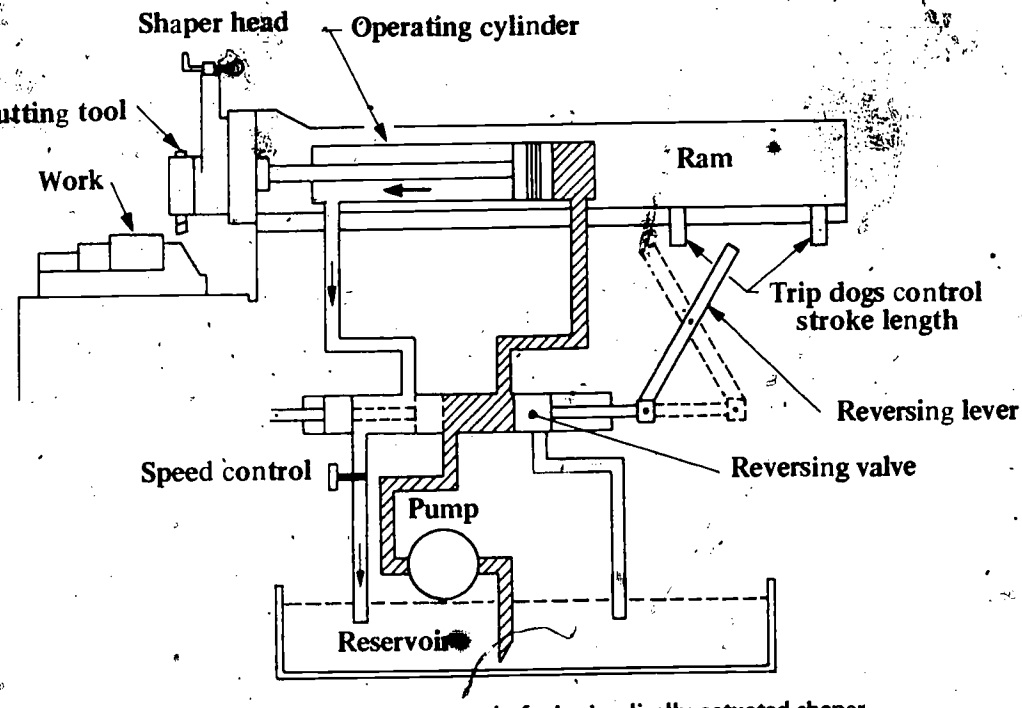

Simple valving permits accurate control of a hydraulically actuated shaper.

Scientific Principle Involved: Pressure Transmission by Liquid

Liquids, when subjected to pressure changes, transmit the pressure change to all parts of the fluid undiminished (Pascal's principle). This principle may also be stated as follows: Pressure applied anywhere on a confined fluid is transmitted undiminished in every direction. The force thus exerted by the confined fluid acts at right angles to every portion of the surface of the container and is equal upon equal areas. Note that fluids may be either liquids or gases; Pascal's principle applies to both of these states of matter.

Application of Principle

Devices in which liquids are used to transmit pressure, such as hydraulic presses, lifts, and brakes, can be examined, tested, and operated. Pressure gauges can be placed in the system to determine the system's pressure. Cylinders can be measured and the pressure converted to force to determine the force being used to produce a particular motion. Machines can be adjusted as follows to demonstrate the hydraulic principles:

1. The speed of the machine can be changed by restricting liquid flow.
2. An increase in pressure can be demonstrated by increasing the work load.

Selected References

Note: The numbers in parentheses in this section refer to entries in the list of selected references that appear within this publication immediately after the text.

(6), pp. 3-6; *(27)*, pp. 200-202; *(36)*, pp. 54-58; *(69)*, Chapter 18, p.2; *(80)*, pp. 463-72.

Unit 34 — BRAKING SYSTEMS

Devices for retarding or stopping motion are found in many pieces of equipment. The basic type of braking operation is a band tightened around or a pad pressed against a wheel in motion. Braking can be assisted by regulating the movement of fluids (liquids or gases), controlling the flow of electric current, reversing the rotation of ship propellers, reversing the pitch of airplane propellers, closing the clam-shell doors of jet engines, or pressing a disk against the face of a wheel.

In the braking systems of vehicles that move on wheels (such as automobiles, motorcycles, and

scooters), the friction between brake drums and brake shoes or between pads and metal disks slows the rotation of the wheels; however, it is the friction between the tires and the road that results in the stopping of the vehicles.

The application of hydraulic force is almost universal in the braking systems of modern automobiles. The modern hydraulic system is a combination of mechanical linkage and force transmitted through liquids to the brake shoes or disks. Power brakes use a pneumatic cylinder operated by the engine vacuum to increase the ease and efficiency of the braking force. The efficiency of the braking force continues to grow in importance as automobile speed increases and automobile safety receives greater attention.

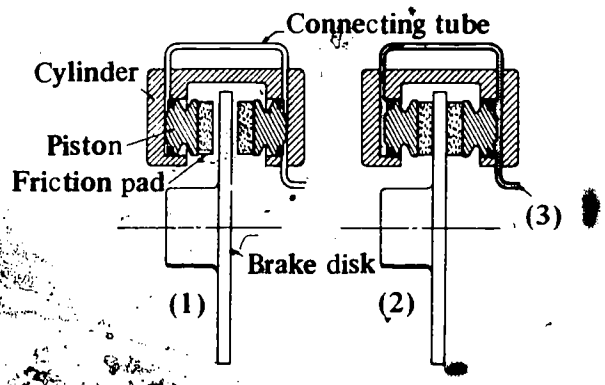

In sectional view (1) the disk brake is in a released position; in (2), the brake is in an applied position because of the hydraulic pressure (3) from the master cylinder.

A practical application of force distribution through liquid pressure is found in the four-wheel hydraulic brake system of the automobile. When force is applied to the foot pedal, a pressure is transmitted equally throughout the system to each wheel by the employment of the mechanical advantage of levers. At the road wheel hydraulic cylinders convert force through mechanical linkage to the brake shoes or friction pads. Release of pressure on the foot pedal reduces liquid pressure in the system, and spring tension returns to the original position all components, such as pistons, springs, and shoes.

Scientific Principle Involved: Pascal's Principle

Total force is the force acting against the entire area of a particular surface. A liquid exerts a total force against the entire area of the bottom and sides of its container. Since liquid pressure equals force per unit area, total force equals the product of the average pressure on the area times the entire area.

The principle of the transmission of force by a liquid can be illustrated as follows: If a force of 50 pounds were applied to a piston at a master cylinder whose area was 2 square inches, the 50 pounds of pressure would be distributed equally so that each square inch would produce 25 pounds of force. The force applied at each wheel cylinder would be 25 pounds if the cylinder had an area of one square inch. Force can be increased by enlarging the diameter of the output cylinder or by increasing the pressure per square inch (psi).

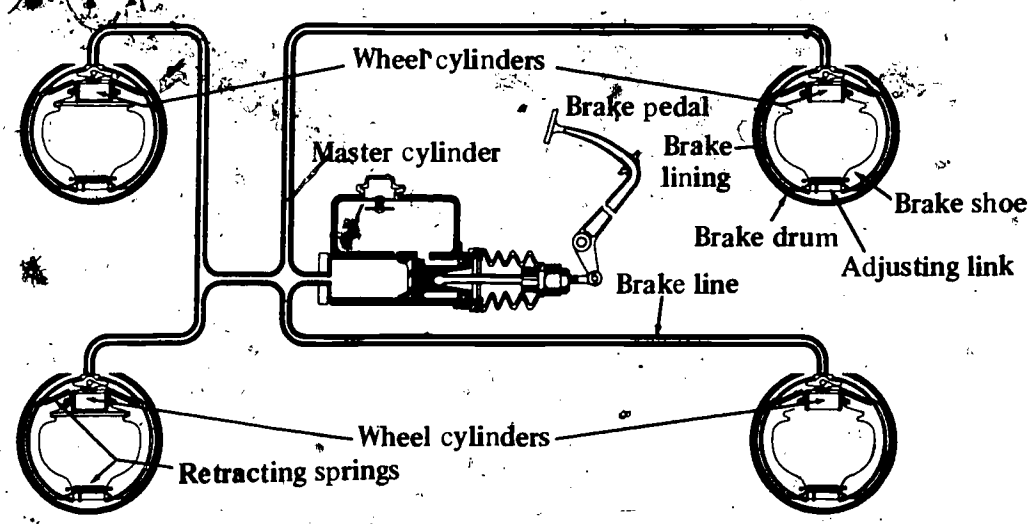

A schematic of a typical hydraulic system shows how brake shoes are activated to press the brake lining against the brake drums.

Application of Principle

Instruction relating to basic hydraulic principles can be furthered through activities involving the service and repair of automotive hydraulic brake systems. Some of the activities students can perform are as follows:

1. Measure the pressure developed in a brake system.
2. Calculate the force developed at each brake shoe.
3. Service and repair automotive brakes.
4. Determine the compressibility of air as compared to brake fluid by allowing air to be admitted into the system.

Selected References

Note: The numbers in parentheses in this section refer to entries in the list of selected references that appear within this publication immediately after the text.

(4), pp. 146-50; *(90)*, pp. 108-11; *(22)*, pp. 571-80, 587-94; *(27)*, pp. 200-202; *(36)*, pp. 54-60; *(63)*, p. 658; *(69)*, Chapter 18, pp. 1-10; *(75)*, Chapter 41, pp. 1-14, Chapter 51, pp. 1-5, *(78)*, pp. 504-18.

Unit 35 — FUEL PUMPS

The fuel pump is a simple example of the hydraulic pump used in almost all hydraulic applications. Power steering in the automobile is another application of the hydraulic pump. Many machines, jacks, and automobile lifts use hydraulics as their principal form of power. Production processes in industrial plants make extensive use of hydraulics.

The hydraulic fuel pump is designed to supply gasoline to the carburetor of an internal-combustion engine at a constant low pressure. It is a positive displacement pump using a diaphragm driven by a spring to develop and maintain pressure on the outlet side. In operation the diaphragm of the fuel pump is pulled back on the intake stroke by the action of the engine camshaft. As the diaphragm moves back on the intake stroke, a partial vacuum is produced in the fuel chamber. Atmospheric pressure acting on the fuel in the tank pushes it through the fuel lines, past the inlet valve, and into the fuel pump chamber. When the diaphragm is released, a spring located behind the diaphragm pushes the diaphragm forward, placing a pressure of approximately 6 pounds per square inch on the fuel in the chamber. This pressure forces the fuel against the inlet valve, closing it. When the carburetor needle valve opens, relieving the pressure in the line between the fuel pump and carburetor, the diaphragm moves forward, pushing fuel through the outlet valve and into the carburetor. The spring and diaphragm maintain an almost constant pressure on the fuel, thereby providing a continuous supply of fuel to the carburetor.

An electric fuel pump is used on some heavy-duty equipment, such as trucks and buses. This fuel pump contains a flexible metal bellows that is operated by an electromagnet.

Certain internal-combustion engines make use of the fuel-injection system. Instead of a carburetor this system uses a series of injection nozzles and a high-pressure fuel pump to spray the fuel into the air entering the engine cylinders.

Scientific Principle Involved: Atmospheric Pressure

Liquids will always flow to balance a pressure differential. When the pressure within the fuel pump chamber is reduced below atmospheric pressure (14.7 pounds per square inch) by the action of the diaphragm, atmospheric pressure within the gasoline tank pushes the gasoline from the tank into the fuel pump chamber, balancing the pressure within the tank and fuel pump chamber at atmospheric pressure.

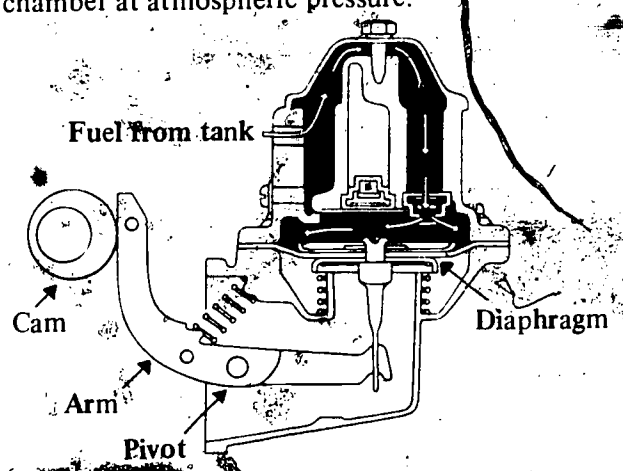

The illustration presented above shows a typical fuel pump in which the movement of the diaphragm produces a partial vacuum.

Application of Principle

1. Disassemble and assemble a fuel pump, studying the operation of each component part. Determine the operating characteristics of the total pump and the contribution of each part to the operation of the pump.
2. Test the fuel pumps in three ways — for volume, vacuum, and pressure — as follows:
   a. Conduct the volume test by disconnecting the outlet line of the fuel pump and pumping gasoline into a measured container. Run the engine at idle speed on the fuel remaining in the carburetor. In a specified time compare the output with the manufacturer's specifications.
   b. Conduct the vacuum test by attaching a vacuum gauge to the inlet side of the fuel pump. Operate the fuel pump and compare the obtained vacuum with the manufacturer's specifications.
   c. Conduct the pressure test by attaching a pressure gauge to the outlet side of the fuel pump. Operate the fuel pump and compare the obtained pressure with the manufacturer's specifications.

Selected References

Note: The numbers in parentheses in this section refer to entries in the list of selected references that appear within this publication immediately after the text.

(4), pp. 61-64; *(22)*, pp. 127-32; *(27)*, pp. 200-202; *(54)*, pp. 222-24; *(69)*, Chapter 6, pp. 1-10; *(75)*, Chapter 26, pp. 1-4, Chapter 51, pp. 1-5; *(78)*, pp. 180-81.

Unit 36 — POWER STEERING

Steering an automobile by moving the steering wheel manually has become more difficult because of increased weights and the use of wide, low-pressure tires. Ratios between the steering wheel and road wheels have been increased to compensate for the greater force needed to turn the automobile. A method of obtaining additional force to turn the wheels is the power-steering assembly. Power steering is a hydraulic system designed to assist the driver in turning the wheels of the automobile. During the past years a number of systems have evolved. Each, however, consists of a hydraulic pump driven by the automobile engine. The hydraulic fluid, under pump pressure, is controlled by a series of valves which direct the fluid to the proper chambers to assist the driver in turning the automobile.

The hydraulic pump is the heart of any hydraulic system. The pump develops no power of its own; it simply converts work applied to its drive shafts into the movement of a volume of oil under pressure. The volume is expressed in gallons per minute (gpm) and the pressure in pounds per square inch (psi). The two types of hydraulic pumps in common use are the positive-displacement pump and the nonpositive-displacement pump. The nonpositive-displacement pump uses the centrifugal force caused by rotation to move large quantities of fluid at low pressures. The automotive-engine water pump is of this design. When permitted to operate freely, it moves

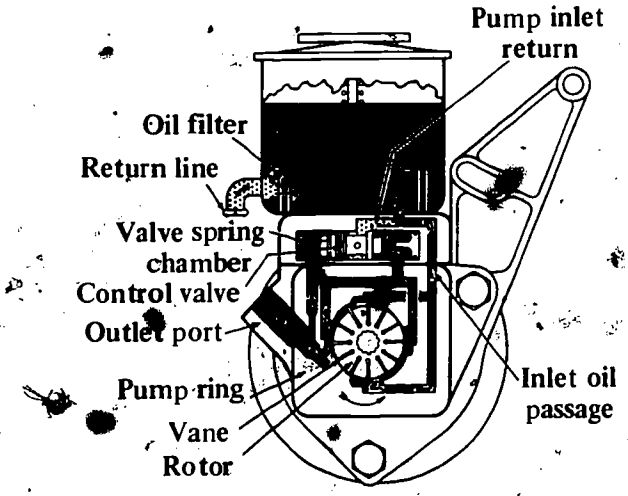

The vane-type power-steering pump provides additional force to assist in turning the wheels of an automobile (Ford Motor Co.).

large quantities of water through the cooling system. If the system is restricted, as it is when the engine is cold and the thermostat is closed, the pump will simply rotate without movement or displacement of water.

All power-steering systems use a positive-displacement pump. For each revolution of the pump shaft, a specific quantity of fluid is displaced; i.e., pumped into the outlet line. Positive-displacement pumps have the advantage of (1) capability for pumping high pressures;

(2) minimum size; (3) relatively high volumetric efficiency; (4) relatively small change in efficiency throughout the pressure range; and (5) great flexibility of performance. Most power-steering pumps on today's vehicles are based on a vane design or a modification of this design.

Some power-steering systems use a simple hydraulic cylinder connected to the steering linkage to assist the turning. In these systems fluid under pressure is pumped to one side of the cylinder. The pressure of the fluid in the cylinder forces the piston to move within the chamber. Since the piston is connected to the steering linkage, the movement of thepiston helps turn the automobile wheels. In some cases the piston is stationary and the cylinder is connected to the linkage. In this case the movement of the cylinder assists turning.

Scientific Principle Involved: Pressure Transmission by Liquids

Hydraulic fluids under pressure exert a force in every direction within a closed container. The force resulting from the pressure is determined by the pressure and the surface area on which the pressure is applied. When the pressure is applied to a movable piston (or stationary piston and movable cylinder), the resultant force is equal to the pressure per square inch (psi) times the area of the piston, measured in the same units (square inches).

Application of Principle

1. Power-steering systems can be tested on the automobile for operating pressure, flow (gpm), and relief-valve setting – maximum system pressure. By the installation of an engine tachometer, a decrease in engine speed will be noted when the pump is operating at maximum pressure.
2. Through the use of selected power steering components or purchased hydraulic pumps, motors, and cylinders, a number of devices can be constructed as follows:
   a. A drill-press vise can be made to operate hydraulically by the use of a hydraulic cylinder and pump.
   b. A hydraulically operated can crusher can be built through the use of a hydraulic cylinder and pump in addition to a chamber to hold the can being crushed.
   c. A pencil sharpener can be operated hydraulically through the use of a hydraulic pump and a motor.

Selected References

Note: The numbers in parentheses in this section refer to entries in the list of selected references that appear within this publication immediately after the text.

(6), pp. 3-6, 21-24, 45-48; *(22)*, pp. 190-91, 546-60; *(27)*, pp. 200-202; *(36)*, pp. 54-68; *(63)*, p. 37; *(69)*, Chapter 17, pp. 21-24; *(75)*, Chapter 11, pp. 3-4, Chapter 39, pp. 10-14, Chapter 51, pp. 1-5; *(78)*, pp. 464-71.

Unit 37 — AIR CONDITIONERS

Automobile air conditioners are designed to make the interior climate of the automobile comfortable during summer driving. This comfort is attained by removing both heat and water vapor from the air automatically. As the temperature of the air is lowered, the ability of the air to hold water decreases. The air reaches its coldest temperature in the car and air conditioner when it passes over the cooling coils (evaporator). Water vapor in the air condenses and is deposited on the cooling coils. The water is collected at the bottom of the coils, and a hose carries the condensed water to the ground under the automobile.

The automobile air conditioner uses the same principle of operation as that used by most home refrigeration units and industrial air conditioners. These systems use the principle that when a liquid changes to a gas, heat energy is required. The heat for this change of state comes from the surrounding materials and air. The change takes place at a constant temperature. The temperature at which this change of state takes place is, however, dependent upon the pressure placed above the liquid. As the pressure increases, the temperature at which the change of state occurs increases.

Freon-12, an odorless and nontoxic chemical consisting of carbon, fluorine, and chlorine, is the most common liquid used as a refrigerant in automobile air conditioners. At atmospheric pressure Freon-12 (F-12), boils at 21.7 degrees F.

below zero. At a pressure of 42 pounds per square inch, F-12 boils at 45 degrees F., which is a more practical temperature for air conditioning. Each pound of F-12 which changes to a liquid removes 70 British thermal units of heat. The heat comes from the surrounding air. Since heat is a form of energy, the removal of this energy from the air lowers the temperature of the air.

In this process the refrigerant is changed from a liquid to a gas. The gas is carried to a compressor, where the pressure is raised to 150 to 160 pounds per square inch. The boiling temperature is, therefore, increased to 115 to 120 degrees F. This temperature is above the normal air temperature. The high-pressure, high-temperature gas is pumped to a condenser next to the automobile radiator. At normal summer temperatures of 85 to 100 degrees F., air passes over the radiator, removing heat from the condenser and gas. As heat is removed, the refrigerant changes back into a liquid. If the outside temperature is higher than noted, the condensing pressure will increase to maintain a temperature of 20 to 30 degrees F. above the outside temperature.

When the gas is condensed into a liquid, the liquid flows back to the evaporator inside the automobile. Through the use of a valve or restrictor, the pressure is reduced to around 45 pounds per square inch. The refrigerant can again evaporate and remove more heat from the interior of the automobile. The air-conditioning cycle is continuous; the refrigerant is changing state in both the evaporator and condenser at all times during operation. Since the refrigerant is just "a carrier of heat energy," it is never expended. It need be replaced only if the system develops a leak.

The heat pump, sometimes used for home heating, is a reversal of the air-conditioning cycle. The evaporator is outside and takes heat from the outside air and discharges it through a condenser

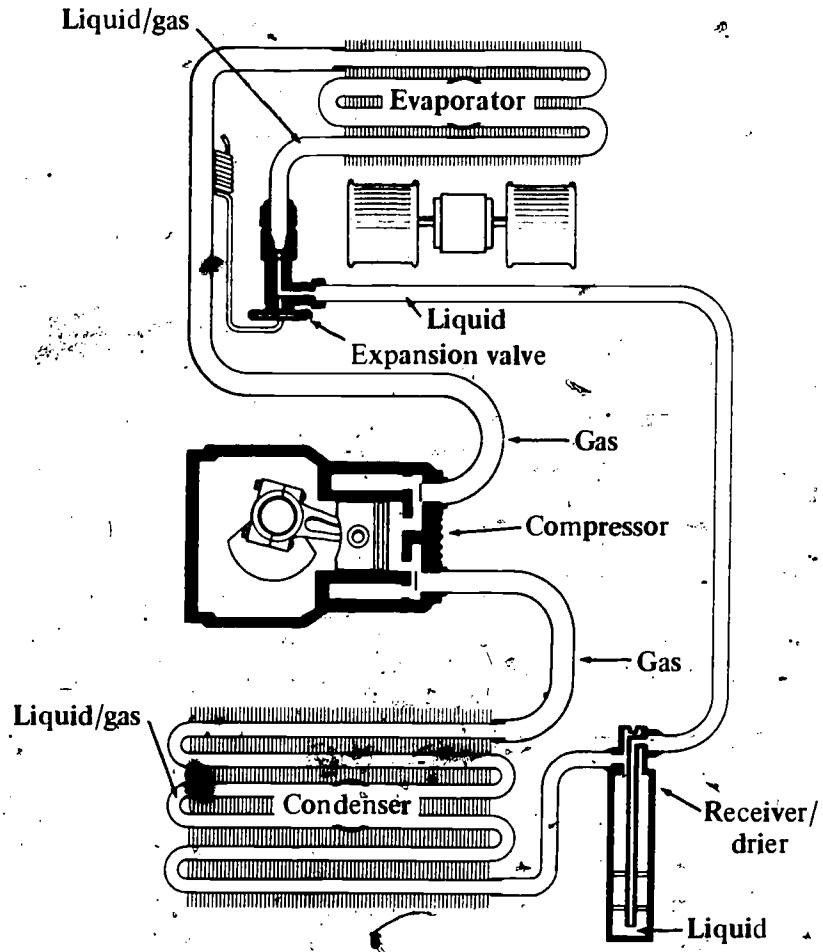

The state of the refrigerant at certain points in the air-conditioner unit is indicated in the diagram.

into the home. In the summer the system can be reversed through the use of valves to cool the home.

Scientific Principle Involved: Heat Transfer

During the change of state of a liquid, heat energy is either absorbed or expended at a constant temperature. This form of heat transfer is called "latent heat of vaporization." The amount of heat being removed or added depends upon the substance. Water has a higher latent heat of vaporization than any other common substance. It takes 970.4 British thermal units of heat to change one pound of water to one pound of steam. Water would make an excellent refrigerant except that in order to get water to boil at air-conditioning temperatures of 40 to 60 degrees F., the water must be under a vacuum of more than 20 inches of mercury. This pressure is inefficient since a very large compressor would be required to operate the system.

Application of Principle

1. An automobile air conditioner can be used for student demonstration and activities. Also, a teaching system can be developed by obtaining a refrigeration or air-conditioning system and providing it for student use.
2. Gauges can be put on both the high and low sides of the unit to determine the operating pressures and temperatures at which the change of state is taking place in the evaporator and condenser.
3. Possible leaks can be checked through the use of a leak detector or a solution of soap and water on all joints.
4. A compressor can be disassembled and assembled and the operation of the compressor studied.

Selected References

Note: The numbers in parentheses in this section refer to entries in the list of selected references that appear within this publication immediately after the text.

(13), pp. 263-65; *(22)*, pp. 602-4; *(27)*, pp. 279-80; *(28)*, pp. 1-369; *(36)*, pp. 68-74; *(54)*, pp. 555-58; *(69)*, Chapter 20, pp. 1-12; *(75)*, Chapter 48, pp. 1-9.

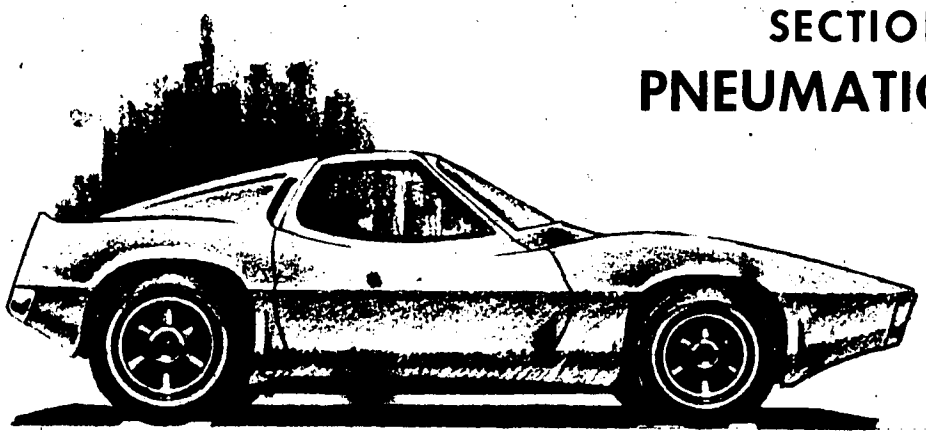

SECTION VII
PNEUMATIC POWER

Unit 38 — AIR-POWERED TOOLS

Air-powered (pneumatically operated) tools are particularly useful because they are relatively light and small, run cool, and have variable speed and torque. A few of the operations that can be performed by air-powered tools are drilling, sanding, grinding, chipping, tightening, and hammering. Other devices commonly found in industrial arts that depend on compressed air for their operation are spray guns, automatic feeds on printing presses, lubrication equipment, lifts, and jacks. In order that this flexible source of power can be used, an adequate supply of compressed air is needed, and hose connections should be conveniently located in the facility.

Air motors in air-powered tools require a pressure of approximately 90 pounds per square inch for efficient operation. A satisfactory source for obtaining this air pressure is the compressor in the automotive or woodworking facility; the compressor usually provides a pressure of 150 pounds per square inch. An air-powered tool is comprised of an air motor, housing, valve with lever, gears, spindle, and attachment to do the work. Motion in air-powered tools is produced in several ways. One method makes use of high-velocity air directed at a paddle or turbine wheel. The forced air causes the wheel to rotate like a waterwheel. Another method makes use of the relationship between pressure and volume. This second method is used to operate piston and rotary-vane motors, the two most common types of motors used in air-powered tools. These tools use reciprocating parts to accomplish work. Examples of these tools are the sheet-metal nibbler and the impact wrench used to tighten or loosen lug nuts on automobile wheels.

Scientific Principle Involved: Mechanical Properties of Gases

Two types of motors used to power air tools are the rotary type and the percussion or reciprocating type. In the first type a rotor with vanes is surrounded by a housing, usually made of cast aluminum. Air enters the housing, pushes on the vanes, and rotates a central shaft. The drill chuck or grinding wheel is fastened to the end of the central shaft. In the second type compressed air enters a cylinder and moves a piston that is connected to or strikes another part such as a chisel or riveting hammer. The pressure of compressed air and gases is frequently measured in atmospheres. One atmosphere of pressure is equal to 14.7 pounds per square inch (standard atmospheric pressure). When air is under a pressure of several atmospheres, it can exert a great expansive

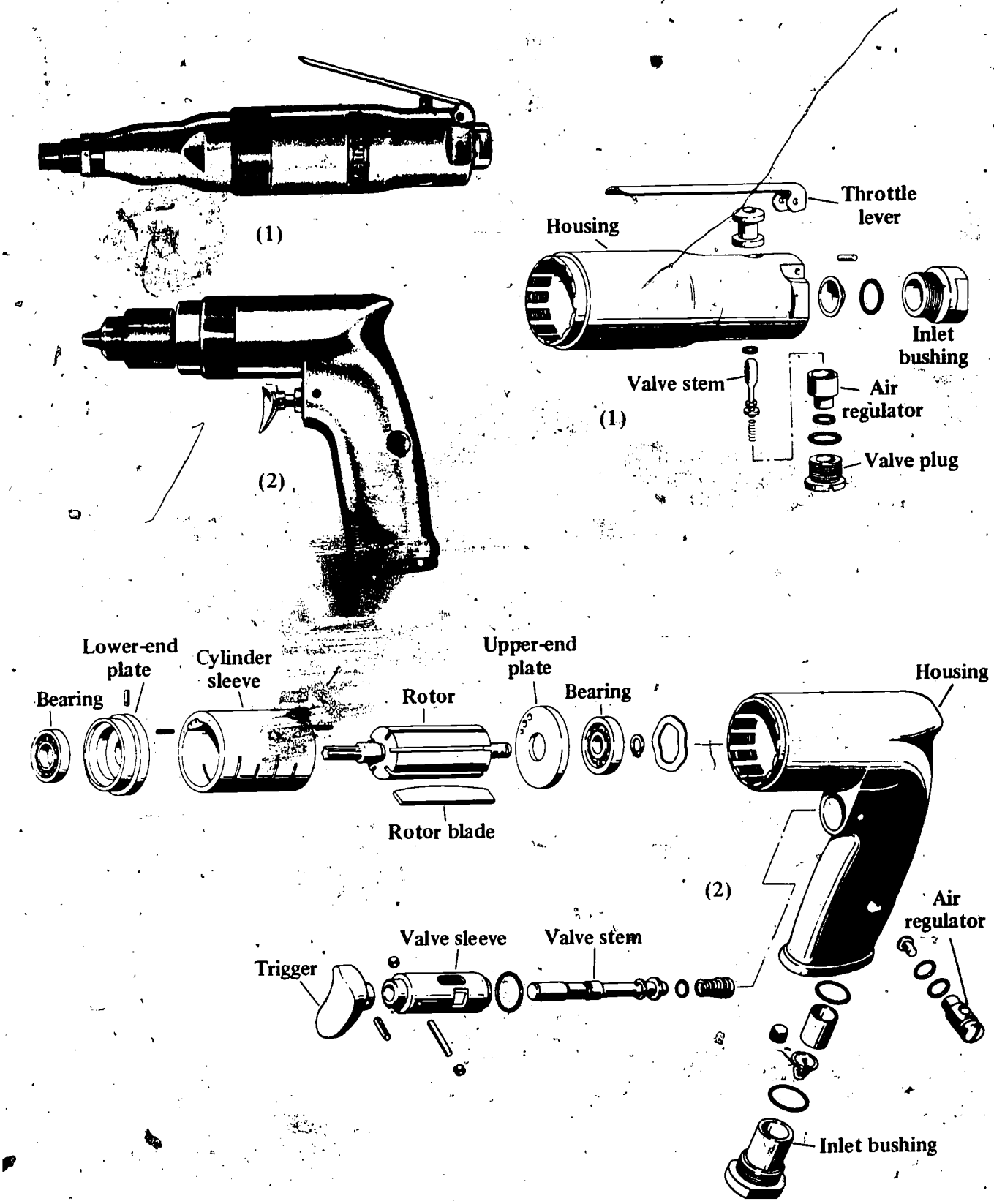

Photographs and exploded views illustrate units and components of air-powered tools (screwdrivers, nutsetters, and drills): (1) lever handle and (2) pistol handle (Stanley Air Tools).

force, and this force can be transmitted for a great distance through strong-walled tubes.

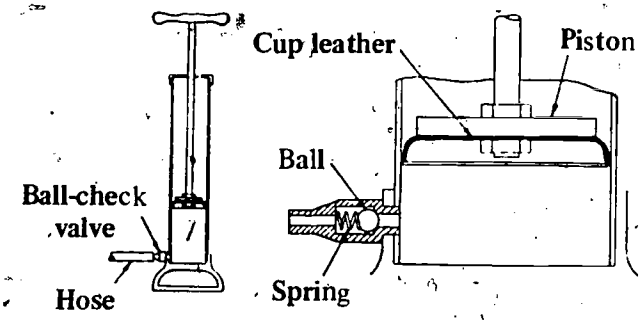

A bicycle pump is the simplest positive-displacement compressor. The piston, secured to a handle by a long rod, has a cup-shaped leather face opening downward when the pump is in use. The downward motion of the piston causes sufficient initial pressure to open up the cup and produce a tight seal between the leather and the cylinder wall. Air is forced through the ball-check valve into the tire.

The upstroke of the piston creates a partial vacuum inside the cylinder, permitting atmospheric air to flow past the cup leather and filling the cylinder with air so that the cycle may be repeated. The flexible cup leather actually serves the function of a check valve because it opens to admit air into the cylinder (on the upstroke) but prevents the escape of air from the cylinder (on the downstroke) as air pressure forces the edges of the leather tight against the inside of the cylinder.

Reciprocating air or gas compressors operate on the same principle as the bicycle pump but with design changes made in the interest of ruggedness, efficiency, and durability.

Application of Principle

1. Instruction relating to pneumatics can be extended and reinforced through the use of air-powered tools in power mechanics and automotive mechanics activities.
2. An understanding of how the scientific principles relating to pneumatics are applied can be gained through the disassembly and assembly of air motors or air-powered tools. Emphasis should be placed on understanding the function of the entire unit and the operation of each part in relation to the complete assembly.

Selected References

Note: The numbers in parentheses in this section refer to entries in the list of selected references that appear within this publication immediately after the text.

(3), pp. 1-47; *(13)*, pp. 277-78; *(25)*, pp. 20-49; *(31)*, pp. 1-16; *(41)*, p. 1941; *(42)*, p. 972; *(49)*, Volume 1, p. 143; *(54)*, pp. 211, 233-34; *(63)*, pp. 16-46; *(69)*, Chapter 18, p. 1; *(75)*, Chapter 50, p.19, Chapter 51, pp. 6-8.

Note: Additional information on air-powered tools can be obtained from (1) Stanley Air Tools, 4525 Firestone Boulevard, South Gate, California; or (2) Stanley Air Tools, 30520 Lakeland Boulevard, Willowick, Ohio 44095.

Unit 39 — SPRAY GUNS

Compressed air is passed through a tube leading to the nozzle of a spray gun. The rapidly moving air in this tube passes over the open end of another tube which leads from a vented container holding a liquid. The pressure on the open end of the second tube is lowered by the rapid air flow in the first tube. The air pressure on the surface of the liquid in the vented container forces the liquid to flow into the air stream, where it is atomized before reaching the spray nozzle.

A hand-held fly sprayer (with the hand pump to apply the air stream) can be used to demonstrate principle of operation. The tube supplying the liquid from the vented container is easily seen just in front of the opening from the air pump.

An orderly procedure for the use of a spray gun is given as follows:

1. Inspect all the parts to be sure that they are clean.
2. Reassemble the spray gun.
3. Fill the paint cup with properly thinned and strained paint.
4. Connect the spray gun to the regulator.
5. Set the regulator to the recommended pressure.
6. Test the spray-gun paint pattern on scrap material.
7. Adjust the paint-control valve and air pressure as needed.
8. Hold the nozzle 6 to 12 inches from work.

9. Spray the paint with even, overlapping strokes.
10. Empty the spray gun of unused paint and thoroughly clean the gun and parts in paint thinner.

Scientific Principle Involved: Bernoulli's Principle

When a fluid (gas or liquid) is undergoing a change in velocity, the pressure (measured at right angles to the direction of flow) is lowest at the point of highest velocity. A venturi (constriction) is built into the air tube leading to the nozzle of a spray gun just before the top of the tube from the spray pot. The air must speed up to flow through the venturi, causing a very low pressure as it reaches the top of the paint tube. The air pressure in the vented paint pot forces paint to flow up the paint tube into the air stream, where it is atomized.

Another application of Bernoulli's principle is found in the carburetor of the internal-combustion engine. The air passage through a carburetor is partially constricted at the point where gasoline is mixed with air. This constriction increases the speed of air, lowers its pressure, and permits more rapid evaporation of the gasoline.

Application of Principle

The student will gain valuable experiences and skill in the actual use of a spray gun.

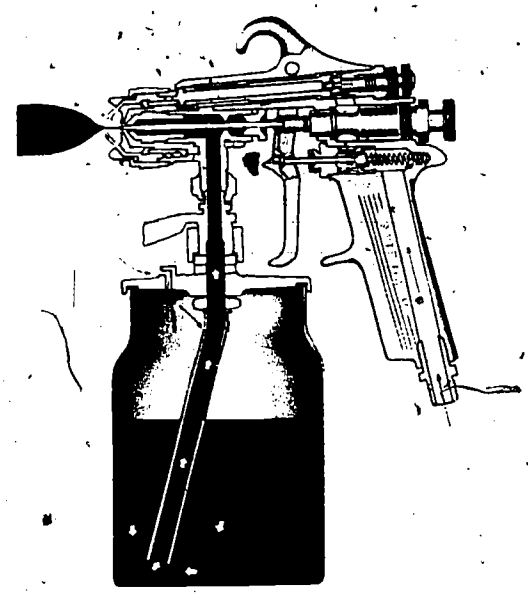

When the trigger of the spray gun is pulled, compressed air travels from the compressor, through the hose and spray gun, and out the nozzle. The air passing through the gun is at its highest velocity at the point where it meets the liquid from the tube of the container. The air pressure at the point where the air and liquid meet is lower than the air pressure in the container. This difference in pressure causes the liquid to rise in the tube and to enter into the air stream. The liquid is atomized and then expelled from the nozzle (DeVilbiss Co.).

Selected References

Note: The numbers in parentheses in this section refer to entries in the list of selected references that appear within this publication immediately after the text.

(9), p. 100; *(13)*, pp. 516-17; *(26)*, p. 151; *(27)*, pp. 223-25; *(49)*, Volume 1, pp. 155-56, Volume 10, p. 580; *(75)*, Chapter 50, pp. 21-28.

Unit 40 – VACUUM PUMPS

Pneumatic power can be produced through the use of compressed air (as explained in Unit 38, "Air-Powered Tools") or a vacuum pump and atmospheric pressure. A vacuum is a positive form of power. The source of this power is the weight of air, which is 14.7 pounds per square inch (psi). To use this power, a vacuum pump must remove the air from one end of a piston so that the air pressure can act on the other end to force it to do work. Vacuum pumps are used in the operation of windshield wipers, power brakes, power clutches, and door locks in the automobile.

Atmospheric pressure is used in the operation of many automotive windshield wipers. The wiper blades are moved by an air-powered motor which uses the pressure differential between the atmospheric pressure and the engine's intake-manifold vacuum for operation. The vacuum is decreased whenever the engine is rapidly accelerated or put under a heavy load. When these conditions occur, the pressure differential disappears, and the air-powered motor no longer has a pressure differential for operation. So that a continuous differential can be provided, a vacuum pump is placed between the windshield-wiper motor and the intake manifold. The vacuum pump maintains a sufficient vacuum (11 inches of mercury; i.e., $5\frac{1}{2}$ pounds below atmospheric pressure) to operate the wiper

motor. Since this vacuum is less than the normal intake-manifold vacuum, the wiper blades operate somewhat more slowly during acceleration and under other conditions requiring maximum engine power. The vacuum pump is an integral part of the fuel pump and operates in an identical manner. (See Unit 35, "Fuel Pumps.") The air flows from the windshield-wiper motor through the vacuum pump into the engine intake manifold. When the engine vacuum is greater than the vacuum developed by the vacuum pump, both the inlet and outlet valves remain open, and the air flows freely from the wiper motor to the manifold. When the manifold vacuum drops, as it does during open throttle and full power operation, the pump acts as a booster, maintaining a minimum vacuum for windshield wiper operation.

Pneumatic systems may be used to multiply a force developed by a man or a machine. An excellent example of a pneumatic power booster is the automobile power-brake system. As vehicle weight, power, and speed are increased, the effort needed to stop the automobile is also increased. The variable factor used to determine the rate of

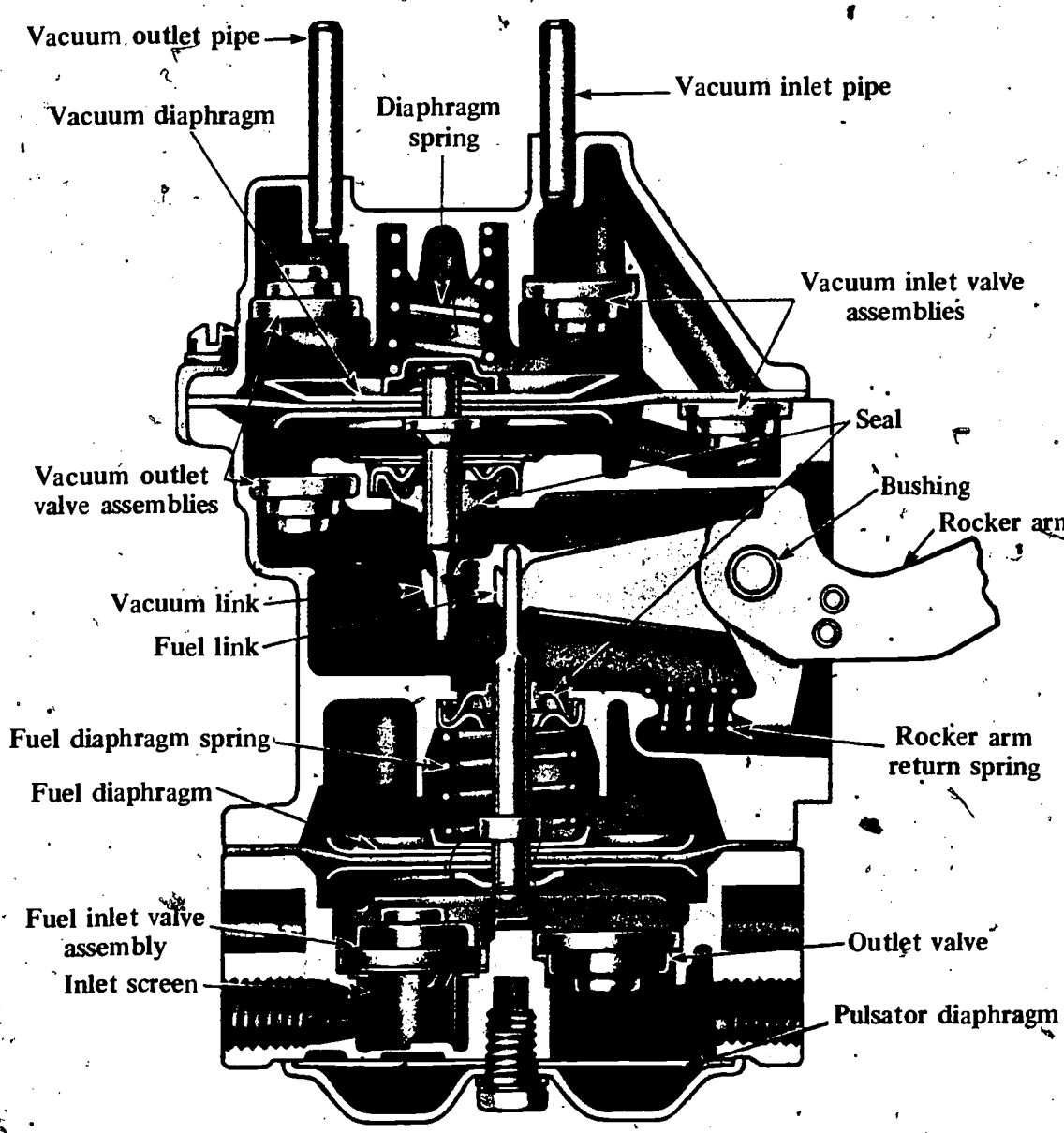

A combination fuel and vacuum pump shares a common housing and rocker arm (General Motors Corp.).

deceleration is the pressure applied on the brake pedal. So that quicker braking can be done with less movement of the pedal, a pneumatic booster has been added to the system. This booster multiplies the braking force applied to the brake pedal. As a result, a small force applied to the brake pedal provides a high pressure on the hydraulic fluid in the master cylinder that rapidly brings the car to a stop. The power-brake system uses the pressure differential developed by the intake manifold. The booster consists of a chamber, valves, and a piston or diaphragm. Atmospheric pressure is admitted on one side of the diaphragm by the movement of the brake pedal. The intake manifold vacuum on the other side produces a pressure differential on the diaphragm so that the diaphragm moves toward the vacuum. Since the diaphragm is connected directly to the master cylinder, this motion operates the brakes and stops the vehicle. Valves are used to control the braking pressure and to balance the pressure on both sides of the diaphragm when the brakes are released.

Scientific Principle Involved: Atmospheric Pressure

The vacuum pump uses the principle that gas flows from high to low pressure in an attempt to balance the pressure. Atmospheric pressure will pass into the windshield-wiper air motor in its effort to balance the vacuum. The air will then travel to the chamber of the vacuum pump since the action of the diaphragm has reduced the pressure below atmospheric pressure. When the diaphragm moves up on the exhaust stroke, the pressure is increased; thus, a flow of air is produced from the chamber.

Application of Principle

1. A vacuum pump can be disassembled and assembled to determine the principle of operation, the flow of air through the pump, and the function of each part of the pump.
2. Pump operation can be demonstrated by attaching an inflated balloon on the intake side and a deflated baloon on the outlet side. When the pump is operated, the air will move from one balloon to the other.

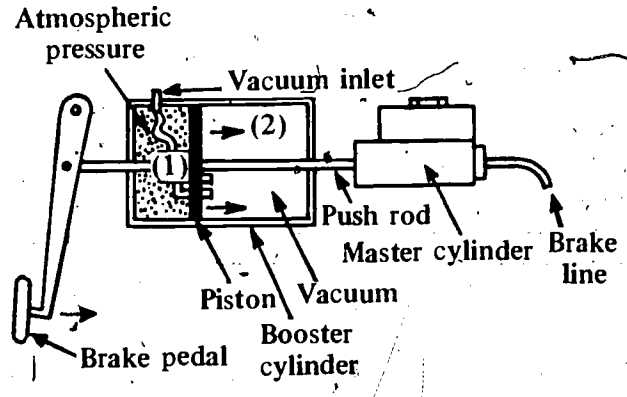

The schematic of a power brake shows how the control valve (1) can apply either engine vacuum or atmospheric pressure to section (2) of the booster cylinder.

3. Pump operation can be measured by attaching a vacuum gauge to the inlet side of the pump. As the pump is operated by hand, the pressure will drop (the vacuum will increase) to a pressure which counterbalances a mercury column approximately 11 inches high.
4. The force resulting from the operation of a power-brake unit can be determined for a number of different pressure differentials. This determination will require disassembly (or the use of a cutaway). Calculations may also include the mechanical advantage of the master and wheel cylinders in order to determine the available stopping force.
5. A power-brake booster assembly can be disassembled and assembled to determine the function and operation of each part as it contributes to the operation of the power-brake booster assembly.

Selected References

Note: The numbers in parentheses in this section refer to entries in the list of selected references that appear within this publication immediately after the text.

(4), pp. 62, 150; *(9)*, p. 98; *(13)*, p. 223; *(22)*, pp. 131, 582-86; *(26)*, p. 157; *(27)*, pp. 214-17; *(36)*, pp. 56-57; *(37)*, p. 24; *(54)*, p. 207; *(69)*, Chapter 6, p.10, Chapter 18, pp. 17-24; *(75)*, Chapter 26, pp. 1-3, Chapter 41, pp. 15-19, Chapter 51, pp. 6-9; *(78)*, pp. 519-24.

SELECTED REFERENCES

Note: The entries in this section are numbered for the purpose of reference. The numbers listed here correspond to the numbers in parentheses located within the text of this publication in sections entitled "Selected References."

1. *Above and Beyond: The Encyclopedia of Aviation and Space Sciences.* Chicago: New Horizons Publishers, 1968.
2. *AC Spark Plug Service Manual.* Flint, Mich.: General Motors Corp., 1966.
3. *Air Tools* (Catalog No. 166). Willowick, Ohio: Stanley Air Tools, 30520 Lakeland Blvd., 1966.
4. Allen, Willard A. *Know Your Car* (Second edition). Chicago: American Technical Society, 1967.
5. *Alternator Training Handbook* (Course 10,000.2 – 10,001.2). Dearborn, Mich.: Ford Motor Co., n.d.
6. Altland, George. *Practical Hydraulics.* Troy, Mich.: Vickers, Inc., P. O. Box 302, n. d.
7. Atteberry, Pat H. *Power Mechanics.* Homewood, Ill.: Goodheart-Willcox Co., 1961.
8. Baker, Philip S., and Others. *Chemistry and You.* Chicago: Lyons and Carnahan, 1966.
9. Barnard, J. Darrell, Celia Stendler, Ben Spock, and Lon Edward. *Science: A Key to the Future.* New York: Macmillan Co., 1963.
10. *Basic Automotive Electricity.* Dearborn, Mich.: Ford Motor Co., 1959.
11. Benrey, Ronald M. "Build a Slot Car Dynamometer," *Popular Science,* 189 (December, 1966), 98-100.
12. Blanchard, Harold F., and Ralph Ritchen. *Auto Engines and Electrical Systems* (Third edition). New York: Motor Book Department, 250 W. 55th St., 1963.
13. Brandwein, Paul F., and Others. *You and Science.* New York: Harcourt, Brace & World, Inc., 1960.
14. Branley, Franklyn M., Milton O. Pella, and John Urban. In two volumes. New York: Ginn & Company, 1965. (Vol. I: *World of Life;* Vol. II: *The Physical World.*)
15. *Briggs & Stratton Repair Instructions II.* Milwaukee, Wis.: Briggs & Stratton Corp., n. d.
16. Brinckerhoff, Richard, and Others. *The Physical World* (Second edition). New York: Harcourt, Brace & World, Inc., 1963.
17. Buban, Peter, and Marshall L. Schmitt. *Understanding Electricity and Electronics.* New York: McGraw-Hill Book Company, 1962.
18. *Construction Safety Orders.* (Article 27: "Powder-Actuated Tools.") Sacramento: Division of Industrial Safety, California State Department of Industrial Relations, 1965.
19. Crouse, William H. *Automotive Electrical Equipment* (Sixth edition). Manchester, Mo.: Webster Division, McGraw-Hill Book Company, 1966.
20. Crouse, William H. *Automotive Engines.* New York: McGraw-Hill Book Company, 1959.
21. Crouse, William H. *Automotive Fuel, Lubricating, and Cooling Systems.* New York: McGraw-Hill Book Company, 1955.
22. Crouse, William H. *Automotive Mechanics* (Fifth edition). Manchester, Mo.: Webster Division, McGraw-Hill Book Company, 1965.
23. Curtis, Francis D., and George Greisen Mallinson. *Science in Daily Life.* Boston: Ginn & Company, 1953.
24. Davis, Ira C., J. Burnett, and E. W. Gross. *Science, Discovery, and Progress.* New York: Holt, Rinehart & Winston, Inc., 1961.
25. Davis, Ira C., and Others. *Science 3, Discovery and Progress.* New York: Holt, Rinehart & Winston, Inc., 1965.
26. Duffy, Joseph W. *Power: Prime Mover of Technology.* Bloomington, Ill.: McKnight & McKnight Pub. Co., 1964.
27. Duff, Charles E., and Others. *Modern Physics.* New York: Holt, Rinehart & Winston, Inc., 1964.
28. Dwiggins, Boyce H. *Automotive Air Conditioning.* Albany, N. Y.: Delmar Publishers, Inc., 1967.
29. *Evinrude Outboard Motor Service Manual* (Fifth edition). Milwaukee, Wis.: Service Division, Evinrude Motors, 1960.
30. *Facts About Spark Plugs & Engines.* Toledo, Ohio: Champion Spark Plug Co., n.d.
31. *The Fundamentals of Compressed Air Power.* Cleveland, Ohio: Compressed Air and Gas Institute, 1966.
32. *General Theories of Operation.* Milwaukee, Wis.: Briggs & Stratton Corp., n.d.
33. Gerrish, Howard H. *Electricity and Electronics.* Homewood, Ill.: Goodheart-Willcox Co., 1964.

34. Giachino, J. W., William Weeks, and Elmer Brune. *Welding Skills and Practices.* Chicago: American Technical Society, 1967.
35. Gibbons, L. L., and L. L. Moody. *Power Mechanics: A Textbook and Laboratory Manual.* Dubuque, Iowa: William C. Brown & Co., 1964.
36. Glenn, Harold T. *Exploring Power Mechanics* (Second edition). Peoria, Ill.: Chas. A. Bennett Co., Inc., 1967.
37. Hogg, John C., Judson B. Cross, and Kenneth E. Vordenberg. *Physical Science: A Basic Course.* Princeton, N. J.: D. Van Nostrand Co., Inc., 1959.
38. *Honda 250, 300 Maintenance Manual.* Tokyo, Japan: Honda Motor Co., Ltd. (American Honda Motor Co., Inc., Gardena, California), 1960.
39. *How the Wheels Revolve.* Detroit, Mich.: General Motors Corp., 1952.
40. *Introductory Physical Science.* Physical Science Study Committee of Educational Services, Inc. Englewood Cliffs, N. J.: Prentice-Hall, Inc., 1965.
41. Jones, F. D., and Erik Oberg. *Machinery Handbook* (Sixteenth edition). New York: The Industrial Press, Inc., 1959.
42. Jones, Franklin D. *Engineering Encyclopedia* (Sixth edition). New York: The Industrial Press, Inc., 1954.
43. Leopold, Luna B., and Kenneth S. Davis. *Water.* New York: Time-Life Books, 1966.
44. Lewis, Edward V., and Robert O'Brien. *Ships.* New York: Time-Life Books, 1965.
45. Lindberg, Roy A. *Processes and Materials of Manufacturing.* Boston: Allyn & Bacon, Inc., 1964.
46. MacCracken, Helen Dolman, and Others. *Basic Physical Science.* New York: The L. W. Singer Company, Inc., 1964.
47. Marcus, Abraham. *Basic Electricity* (Second edition). Englewood Cliffs, N. J.: Prentice-Hall, Inc., 1964.
48. Mark, Herman F. *Giant Molecules.* New York: Time-Life Books, 1966.
49. *McGraw-Hill Encyclopedia of Science and Technology.* New York: McGraw-Hill Book Company, 1960.
50. O'Brien, Robert. *Machines.* New York: Time-Life Books, 1966.
51. *Original Electrical Equipment for Passenger Cars.* Anderson, Ind.: Delco-Remy Div., General Motors Corp., 1961.
52. *Owner's Manual.* Lincoln, Neb.: Cushman Motors, 1964.
53. Palmer, D. B. *The Lambretta Servicemen's Book* (Third edition). Croyden, England: Lambretta Concessionaires, Ltd., Trojan Works, Purley Way (31-17 38th Ave., Long Island City, N. Y.), n.d.
54. Pella, Milton O., and Aubrey G. Wood. *Physical Science for Progress* (Second edition). Englewood Cliffs, N.J.: Prentice-Hall, Inc., 1964.
55. *Power Goes to Work.* Detroit: General Motors Corp., 1963.
56. *A Power Primer.* Detroit: Public Relations Staff, General Motors Corp., 1955.
57. Purvis, Jud. *All About Small Gas Engines.* Homewood, Ill.: Goodheart-Willcox Co., 1956.
58. *The Radio Amateur's Handbook.* Newington, Conn.: American Radio Relay League, Inc., 1968.
59. Sandfort, John F. *Heat Engines.* Garden City, N.Y.: Doubleday & Company, Inc., 1962.
60. Semat, H., and R. Katz. *Physics.* New York: Harcourt, Brace & Co., 1958.
61. Sharpe, Philip B. *Complete Guide to Handloading.* New York: Funk & Wagnalls Co., 1941.
62. Shoultz, Kenneth G. *Basic Electricity: Theory and Practice.* Ontario, Canada: Macmillan Co. of Canada, Ltd., 1965.
63. Smith, Victor C., and B. B. Vance. *Science for Everyday Use* (Third edition). Philadelphia: J. B. Lippincott Company, 1954.
64. *Space Resources for the High School: Industrial Arts Resource Units.* Washington, D. C.: National Aeronautics and Space Administration, 1967.
65. Steinberg, William F., and Walter B. Ford. *Electricity and Electronics, Basic* (Third edition). Chicago: American Technical Society, 1964.
66. Stephenson, George D. *Power Mechanics.* Albany, N. Y.: Delmar Publishers, Inc., 1963.
67. Stephenson, George D. *Small Gasoline Engines.* Albany, N.Y.: Delmar Publishers, Inc., 1964.
68. Stever, Guyford H., and James J. Haggerty. *Flight.* New York: Time-Life Books, 1965.
69. Stockel, Martin W. *Auto Mechanics Fundamentals.* Homewood, Ill.: Goodheart-Willcox Co., 1965.
70. Stollberg, Robert, and Faith F. Hill. *Physics Fundamentals and Frontiers.* Boston: Houghton Mifflin Co., 1965.
71. *Storage Batteries* (DR-5133B). Anderson, Ind.: Delco-Remy Div., General Motors Corp., 1966.
72. *The Story of Combustion.* Detroit, Mich.: Educational Services, Chrysler Corp., n. d.
73. *The Story of Power.* Detroit: General Motors Corp., 1956.
74. Swanson, Robert S. *Plastic Technology: Basic Materials and Processes.* Bloomington, Ill.: McKnight & McKnight Pub., Co., 1965.
75. Toboldt, William K., and Jud Purvis. *Motor Service's Automotive Encyclopedia* (Fourth edition). Chicago: Goodheart-Willcox Co., 1962.
76. Trudeau, Terence J. "Analyzing Piston Engine Performance in Power Mechanics Courses," *Industrial Arts and Vocational Education/Technical Education,* LV (January, 1966).
77. Van Houten, L. F., and Phil Gilman. *General Science Today.* Chicago: Rand McNally & Co., 1954.

78. Venk, Ernest A., and Walter E. Billiet. *Automotive Fundamentals* (Third edition). Chicago: American Technical Society, 1967.

79. *Vespa 64: Parts and Accessories.* Boston: Vescony, Inc., 949 Commonwealth Ave., 1964.

80. Walker, John R. *Machining Fundamentals.* Homewood, Ill.: Goodheart-Willcox Co., 1969.

81. Wetzel, Guy F. *Automotive Diagnosis and Tune-Up.* Bloomington, Ill.: McKnight & McKnight Pub. Co., 1965.

82. White, Harvey E. *Modern College Physics* (Third edition). Princeton, N. J.: D. Van Nostrand Co., Inc., 1956.

83. Wilson, Mitchell. *Energy.* New York: Time-Life Books, 1963.

84. *Wisconsin Air-Cooled Heavy Duty Engines* (Model S-7D). Milwaukee, Wis.: Wisconsin Motor Corp., n. d.

85. *Wisconsin Air-Cooled Heavy Duty Engines* (Models VH4, VH4D). Milwaukee, Wis.: Wisconsin Motor Corp., n. d.

86. Woodward, Robert L., and J. Lyman Goldsmith. *An Introduction to Applied Electricity-Electronics.* Englewood Cliffs, N. J.: Prentice-Hall, Inc., 1963.

87. Woodward, Robert L. *Industrial Arts Safety Instruction.* Sacramento: California State Department of Education, 1966.

APPENDIX A

POWER MECHANICS COURSE OUTLINE

In the following relatively brief course outline for industrial arts power mechanics, the topics, where appropriate, are keyed to the instructional units presented in this publication – for example, under "II. A. Muscle Power (Unit 1)"; and to the comprehensive course outline for industrial arts automotive mechanics in Appendix B – for example, under "I. A. Shop/Laboratory Safety (Refer to Appendix B. Section 1, I.)" This power mechanics course outline, when used for a specific course/program, can be expanded by including (1) additional points covered in the designated units; (2) topics presented in the automotive mechanics outline; and/or (3) information from the publications listed under "Selected References" at the end of each unit.

I. Shop/Laboratory Orientation
- A. Shop/Laboratory Safety
  (Refer to Appendix B, Section 1, I.)
  1. General causes of accidents
  2. Personal causes of accidents
  3. Safety instruction
- B. Tools and Equipment
  (Refer to Appendix B, Section 1, II.)
  1. Appreciation of tools
  2. Care of tools
  3. Classification of tools

II. Natural Power
- A. Muscle Power (Unit 1)
  1. Introduction to simple machines
  2. Work, power, energy, force
- B. Waterwheels (Unit 2)
  1. Types: undershot, overshot, breast
  2. Water pressure
- C. Windmills (Unit 3)
  1. Types: multivane, propeller, "S" rotor
  2. Horsepower output of windmill
- D. Heat Collectors (Unit 4)
  1. Conversion of solar energy to electricity
  2. Nature of heat
- E. Solar Stills (Unit 5)

III. Mechanical Power
- A. Simple and Compound Machines (Unit 6)
  1. Mechanical advantage
  2. Lever, wheel and axle, inclined plane, wedge, pulley, screw
  3. Compound machines
- B. Lubrication (Unit 7)
  (Refer to Appendix B, Section 6, I-XVI.)
  1. Viscosity of oils
  2. Lubricating oil functions
  3. Dry, greasy, and viscous friction
- C. Springs (Unit 8)
  (Refer to Appendix B, Section 16, V.)
  1. Classification of springs
  2. Elasticity: Hooke's law
- D. Clutches (Unit 9)
  (Refer to Appendix B, Section 11, I-X.)
  1. Six classifications of clutches
  2. Sliding friction
- E. Dynamometers (Unit 10)
  1. Methods of providing load
  2. Horsepower

IV. Steam Engines
- A. Steam Engines and Turbines (Unit 11)
- B. Conversion of Heat Into Work

V. Thermal Power
- A. High-Energy Rate Forming (Unit 12)
  1. Four methods of forming
  2. Work, power, energy, force
- B. Powder-Actuated Tools (Unit 13)
  1. Precautions to be observed
  2. Expansion of gases
- C. Jet and Rocket Engines (Unit 14)
  1. Types of jet engines
  2. Newton's laws of interactions
- D. Gasoline Testing (Unit 15)
  (Refer to Appendix B, Section 8, IX.)
  1. Power tests
  2. Conversion of chemical energy to heat energy to mechanical energy
- E. Carburetion (Unit 16)
  (Refer to Appendix B, Section 8, VII.)
  1. Carburetor functions
  2. Bernoulli's principle
- F. Two- and Four-Cycle Engines (Unit 17)
  (Refer to Appendix B, sections 3, 4, 5.)
  1. Four-stroke cycle
  2. Two-stroke cycle
  3. Expansion of gases
- G. Wankel Engines (Unit 18)
  1. Rotor-type engine
  2. Moment of inertia

H. Thermostats (Unit 19)
(Refer to Appendix B, Section 7, VIII.)
1. Types and purposes
2. Thermal expansion

I. Welding Processes (Unit 20)
1. Gas, arc, and resistance welding
2. Kinetic molecular theory

VI. Electrical Power

A. Dry Cells: Primary Cells (Unit 21)
1. Zinc-carbon and mercury cells
2. Conversion of chemical energy into electrical energy

B. Storage Batteries: Secondary Cells (Unit 22)
(Refer to Appendix B, Section 9, IV.)
1. Conversion of chemical energy into electrical energy
2. Electrolysis
3. Hydrometer test
4. Specific gravity
5. Battery installation and servicing
6. Corrosion and oxidation of metals
7. Battery testing
8. Capacity rating of batteries
9. Battery charging
10. Chemical change in lead-acid storage cell

C. Generation of Electricity (Unit 23)
1. Magnetos
2. Magnetism
3. Direct-current generators and alternators
4. Electromagnetic induction
5. Alternating-current rectifiers
6. Rectification of current
7. Generator regulation
8. Electromagnetic switch

D. Transmission of Electric Power (Unit 24)
(Refer to Appendix B, Section 9, III.)
1. Electromotive force
2. Conductors and insulators
3. Electron theory
4. Voltage, current, and resistance
5. Ohm's law
6. Series and parallel circuits
7. Direct-current circuits

E. Transformers (Unit 25)
1. Types: step-up, step-down
2. Electromagnetic induction

F. Spark Plugs (Unit 26)
(Refer to Appendix B, Section 9, IX.D.)
1. Heat-range classification
2. Ionization of gases

G. Ignition Systems (Unit 27)
(Refer to Appendix B, Section 9, IX.)
1. Conventional and transistorized systems
2. Electromagnetic energy

H. Electric Motors (Unit 28)
(Refer to Appendix B, Section 9, V.)
1. Motors: series and shunt wound
2. Electromagnetic induction

I. Fuel Cells (Unit 29)
1. Use in spacecraft
2. Electrochemical effect

J. Photoelectric Cells (Unit 30)
1. Types and uses
2. Photoelectric effect

K. Semiconductor Power Rectifiers (Unit 31)
1. Types of rectifiers
2. P- and N-type semiconductors

VII. Hydraulic Power

A. Jacks and Presses (Unit 32)
1. Hydraulic pump components
2. Pascal's principle

B. Machine Tools (Unit 33)
1. Efficiency of hydraulic systems
2. Pressure transmission by liquids

C. Braking Systems (Unit 34)
(Refer to Appendix B, Section 20, I-VII.)
1. Devices for retarding or stopping motion
2. Pascal's principle

D. Fuel Pumps (Unit 35)
(Refer to Appendix B, Section 8, VI.)
1. Positive displacement pump
2. Atmospheric pressure

E. Power Steering (Unit 36)
(Refer to Appendix B, Section 17, VII.)
1. Advantage of power steering
2. Pressure transmission by liquids

F. Air Conditioners (Unit 37)
1. Types of air conditioners
2. Heat transfer

VIII. Pneumatic Power

A. Air-Powered Tools (Unit 38)
1. Piston and rotary-vane motors
2. Mechanical properties of gases

B. Spray Guns (Unit 39)
1. Operation and procedure for use
2. Bernoulli's principle

C. Vacuum Pumps (Unit 40)
1. Windshield wipers
2. Power brakes
(Refer to Appendix B, Section 20, IV.)
3. Balancing effect of atmospheric pressure

APPENDIX B

AUTOMOTIVE MECHANICS COURSE OUTLINE

Section 1: Shop/Laboratory Practice

I. Automotive Shop/Laboratory Safety
  A. General Causes of Accidents
    1. Improper attitude
      a. Disregard for rules of safety
      b. Recklessness
      c. Laziness
      d. Uncooperativeness
      e. Fearfulness
      f. Impatience
      g. Lack of consideration
      h. Immaturity
    2. Lack of knowledge or skill
      a. Lack of understanding what is to be done
      b. Lack of conviction of need for following prescribed procedures
  B. Personal Causes of Accidents
    1. Operating equipment without permission
    2. Neglecting to secure assistance when needed
    3. Failing to warn other people about unsafe practices or equipment
    4. Operating equipment at unsafe speeds
    5. Working too fast
    6. Neglecting to use safety devices
    7. Using hands instead of equipment for holding materials
    8. Assuming an unsafe position or posture
    9. Working unsafe equipment
    10. Distracting, teasing, abusing, and startling others
    11. Failing to use proper clothing and protective gear
  C. (Refer to *Industrial Arts Safety Instruction*, published by the California State Department of Education, as well as safety instructions issued by the offices of county superintendents of schools and by school districts.)

II. Automotive Tools and Power Equipment
  A. Appreciation of Tools
    1. Development
    2. Value to society
  B. Care of Tools
    1. Storage of tools
    2. Maintenance
      a. Sharpening
      b. Lubricating
      c. Repairing
      (Report tools in need of repair.)
  C. Classification of Automotive Tools
    1. Chisels
      a. Cape
      b. Cold
      c. Diamond-point
      d. Half-round
      e. Roundnose
    2. Drilling tools
      a. Hand drill
      b. Electric drill
      c. Twist drill
      d. Reamers
    3. Files
      a. Mill
      b. Taper
      c. Square
      d. Round
      e. Half-round
      f. Breaker-point
      g. Vixen-cut (body)
    4. Hammering tools
      a. Ball peen hammer
      b. Rawhide-faced mallet
      c. Plastic-tipped mallet
      d. Brass mallet
      e. Rubber mallet
      f. Sledgehammer
      g. Dinging hammer
    5. Measuring tools
      a. Feeler gauges
      b. Micrometers
      c. Steel rules
    6. Pliers
      a. Slip-joint (combination)
      b. Diagonal (cutting)
      c. Long-nose (needle-nose)
      d. Round-nose
      e. Pump-type (channel-lock)
      f. Side-cutting (electrician's)
      g. Vise-grip
      h. Brake-spring
      i. Hose-clamp
    7. Punches
      a. Aligning
      b. Center
      c. Pin
      d. Starting
    8. Hacksaw

9. Screwdrivers
   a. Standard-tipped
   b. Phillips
   c. Clutch
   d. Offset
   e. Setscrew driver (Allen wrench)
10. Shearing tools
   a. Straight shears
   b. Combination shears
   c. Duckbill shears
   d. Multileverage (aviation) shears
11. Soldering tools
   a. Soldering copper
      (1) Standard
      (2) Electric
   b. Fluxes
12. Threading tools
   a. Taps
      (1) Taper
      (2) Plug
      (3) Bottoming
      (4) Machine screw
   b. Dies
13. Wrenches and handles
   a. Open-end wrench
   b. Box-end wrench
   c. Socket wrench
      (1) Standard
      (2) Deep
      (3) Universal
   d. Torque wrench
   e. Adjustable-end wrench
   f. Monkey wrench
   g. Pipe wrench
   h. Handles
      (1) Speed (spinner)
      (2) Ratchet
      (3) Flex (break-over)
      (4) Tee
   i. Extensions
14. Specialized tools
   a. Pneumatic
   b. Hydraulic
   c. Electrical testing
   d. Engine and accessories' testing
   e. Body and fender
15. Power equipment
16. Welding equipment

Section 2: Automobile Components

I. Automobile Components
   A. Engine
   B. Framework
   C. Power Train
   D. Body
   E. Accessories

II. Engine
   A. Purpose
   B. Types
      1. Internal combustion
      2. External combustion
   C. Systems
      1. Fuel system
         a. Purpose
         b. Components
            (1) Fuel tank and lines
            (2) Fuel filter
            (3) Air cleaner (wet and dry)
            (4) Fuel pump
            (5) Carburetor
            (6) Fuel injectors
            (7) Intake manifold
            (8) Fuel-level indicator
      2. Ignition system
         a. Purpose
         b. Components
            (1) Battery (6 or 12 volts)
            (2) Distributor
            (3) Magneto
            (4) Coil
            (5) Spark plugs
            (6) Ignition switch
            (7) Wiring
      3. Lubrication system
         a. Purpose
         b. Components
            (1) Oil pump
            (2) Oil filter
            (3) Oil galleries and passages
            (4) Oil-pressure indicator
            (5) Crankcase
            (6) Crankcase ventilator
      4. Cooling system
         a. Purpose
         b. Types
            (1) Liquid-cooled
            (2) Air-cooled
         c. Components
            (1) Radiator
            (2) Fan blade
            (3) Water pump
            (4) Water jackets and passages
            (5) Thermostat
            (6) Temperature indicator
      5. Electrical system
         a. Purpose
         b. Components
            (1) Battery
            (2) Regulator
            (3) Generator/alternator
            (4) Starting motor
            (5) Wiring
            (6) Switches
            (7) All activated components

III. Framework
- A. Purpose
- B. Construction
  - 1. Box type
  - 2. X-type
  - 3. Unitized type
- C. Units Attached to Framework
  - 1. Engine
  - 2. Suspension system (front and rear)
    - a. Springs
      - (1) Purpose
      - (2) Types
        - (a) Coil
        - (b) Laminated leaf
        - (c) Single leaf
        - (d) Torsion bar
        - (e) Air suspension
    - b. Shock absorbers
      - (1) Purpose
      - (2) Type: direct-acting, telescoping
    - c. Steering system: purpose
    - d. Brakes
      - (1) Purpose
      - (2) Types
        - (a) Mechanical
        - (b) Hydraulic
        - (c) Pneumatic
        - (d) Electric
        - (e) Rigid or independent
      - (3) Components
        - (a) Brake-pedal assembly
        - (b) Master-cylinder assembly
        - (c) Brake lines
        - (d) Wheel-cylinder assemblies
        - (e) Wheel-brake assemblies
        - (f) Hand brake
      - (4) Principle of operation
      - (5) Power brakes
    - e. Tires
      - (1) Purpose
      - (2) Types
        - (a) Tube-type
        - (b) Tubeless
      - (3) Classification
        - (a) Size
        - (b) Plies
        - (c) Material

IV. Power Train
- A. Purpose
- B. Components
  - 1. Clutch
    - a. Purpose
    - b. Types commonly used
      - (1) Single dry disk
      - (2) Fluid coupling
  - 2. Transmission
    - a. Purpose
    - b. Types
      - (1) Standard: manual shift
      - (2) Automatic
      - (3) Overdrive
  - 3. Propeller shaft: purpose
  - 4. Differential
    - a. Purpose
    - b. Gear ratio
  - 5. Rear axles
    - a. Purpose
    - b. Types
      - (1) Live: rear
      - (2) Dead: front

V. Body
- A. Purpose
- B. Design (streamlining)
- C. Construction
  - 1. Pressed-steel panels
  - 2. Reinforcing members
  - 3. Attaching brackets
  - 4. Attaching bolts (rubber-mounted)
- D. Components
  - 1. Firewall assembly
  - 2. Instrument-panel assembly
  - 3. Floor assembly
  - 4. Roof assembly
  - 5. Doors- and center-pillar assembly
  - 6. Rear-quarter assemblies
  - 7. Rear-end assembly
  - 8. Front fenders, hood, and grill assembly
  - 9. Windshield and glass assemblies
  - 10. Seats
  - 11. Body-ventilating system
  - 12. Headlining assembly
  - 13. Exterior molding and trim
- E. Finishes
- F. Body Styles
  - 1. Sports coupe and sedan
  - 2. Convertible
  - 3. Sedans
  - 4. Station wagons
  - 5. Sports cars
  - 6. Compacts
  - 7. Sports wagons (buses, others)
  - 8. Pick-up trucks, trucks (assorted sizes and uses)

VI. Accessories
- A. Definition
  - 1. Comfort/convenience
  - 2. Safety and safety belts
- B. Examples
  - 1. Radio
  - 2. Heater, defroster, air conditioner
  - 3. Windshield wiper
  - 4. Clock
  - 5. Back-up lights
  - 6. Spotlight

7. Courtesy light
8. Automatic light-dimmer

Section 3: Types of Engines

I. Purpose of Engine Classification
   A. To Differentiate Between Engines for Clear Communication
   B. To Categorize Engines by Common General Features
   C. To Describe Engines for Information and Possible Application

II. Criteria for Engine Classification
   A. Types of Fuel
      1. Gasoline (high and low compression)
      2. Fuel oil (diesel, Hesselman)
      3. Liquefied petroleum gas (LPG)
   B. Cycling
      1. Four-stroke cycle
      2. Two-stroke cycle
   C. Cooling
      1. Liquid-cooled
      2. Air-cooled
      3. Combined
   D. Valve Arrangement
      1. L-head (flat head)
      2. I-head (overhead valve)
      3. F-head (combination L- and I-head)
      4. T-head
   E. Cylinders
      1. Number of cylinders
      2. Arrangement of cylinders
         a. Inline
            (1) Vertical
            (2) Inverted
            (3) Slant or tilt
         b. Vee
            (1) Vertical
            (2) Inverted
            (3) Variable angle
         c. Opposed (pancake)
         d. Radial
            (1) Single bank
            (2) Multibank
         e. Rotary Wankel
   F. Use
      1. Passenger car
      2. Truck or bus
      3. Agricultural machinery
      4. Construction equipment
      5. Aircraft
      6. Motorcycles
      7. Railroad engines
      8. Marine
      9. Stationary
      10. Specialized use
   G. Identification
      1. Manufacturer's name
         a. Real manufacturer: Ford, General Motors, others
         b. Application manufacturer: International Harvester, Gillig, Euclid, others
      2. Designer's name
         a. Individual designer: Diesel, Wankel, others
         b. Multiple designer: Pratt and Whitney, others
      3. Series number (390, F100, 300G, others)
   H. Additional Types and Innovations
      1. Turbojet
      2. Ramjet
      3. Gas turbine
      4. Free piston
      5. NSU-Wankel
      6. Rocket
      7. Fuel cell
      8. Solar
      9. Electric
      10. Steam

Section 4: Engine Operation and Measurement

I. Physical Principles Related to Engine Operation
   A. Definition of Physical Principles
   B. Structure of Matter
      1. Atoms
         a. Size
         b. Structure
            (1) Electrons
            (2) Protons
            (3) Neutrons
      2. Elements
      3. Molecules
         a. Structure
         b. Chemical reaction
   C. States of Matter
      1. Liquids
      2. Solids
      3. Gases
   D. Combustion
      1. Definition
      2. Products of combustion
         a. Heat
         b. Light
         c. By-products
   E. Heat
   F. Change of State
      1. Definition
      2. Method of accomplishment
         a. Application of heat
         b. Application of cold
   G. Expansion of Matter
      1. Liquids: thermometer
      2. Solids: thermostat
      3. Gases: combustion chamber

H. Pressure Increase
   1. Cause
   2. Results
      a. Temperature increase
      b. Compression
I. Gravity
   1. Definition
   2. Measurement: weight
J. Atmospheric Pressure
   1. Definition
   2. Weight of air
   3. Pressure exerted
K. Vacuum
   1. Definition
   2. "Partial vacuum"

II. Engine Operation
A. Cylinder Design
   1. Description
   2. Sealing
      a. Head
      b. Valves
B. Piston
   1. Description
   2. Piston fit
   3. Materials used
   4. Piston action
      a. Combustion
      b. Heat
      c. Pressure increase
C. Piston Rings
   1. Purpose
   2. Location
   3. Types
D. Valves
   1. Type
   2. Purpose
   3. Ports
      a. Intake
      b. Exhaust
   4. Valve operating mechanism
      a. Camshaft
      b. Cam followers or lifters
      c. Pushrods
      d. Valve spring
      e. Rocker arm
E. Crankshaft
   1. Purpose
   2. Description
   3. Rotary motion
F. Action in Cylinder
   1. Definition of "stroke"
      a. BDC to TDC
      b. TDC to BDC
   2. Four-stroke cycle
      a. Two crankshaft revolutions
      b. Four strokes
         (1) Intake
         (2) Compression
         (3) Power
         (4) Exhaust
   3. Two-stroke cycle
   4. Diesel engines
G. Flywheel
   1. Description
   2. Purpose

III. Forces
A. Work
   1. Definition
   2. Illustrations
   3. Measure in terms of distance and force
   4. Formula: $Work = f \times d$
B. Energy
   1. Definition
   2. Potential
   3. Kinetic
C. Power
   1. Definition
   2. High-powered machine
   3. Low-powered machine
   4. Horsepower
      a. Definition
      b. Formula: $Hp = \frac{force \times distance}{33{,}000 \times time}$
D. Inertia
   1. Definition
   2. Evidence of inertia at work
E. Torque
   1. Definition
   2. Method of measure (foot-pounds)
   3. Formula: $Torque = force \times distance\ (lever\ arm)$
F. Friction
   1. Definition
   2. Types
      a. Dry
      b. Viscous
      c. Greasy

IV. Engine Measurements
A. Bore
   1. Definition
   2. Method of determination
B. Stroke
   1. Definition
   2. Method of determination
C. Piston Displacement
   1. Definition
   2. Formula: $Displacement = \frac{\pi D^2 L}{4}$
   3. Multicylinder total displacement $\times$ number of cylinders
D. Compression Ratio
   1. Definition
   2. Clearance volume
   3. Formula: $Cylinder\ volume\ @\ BDC \div clearance\ volume$
   4. Problem related to higher compression ratios

a. Power increase
b. Predetonation more acute (knocking)

V. Engine Power Output
A. Brake Horsepower (bhp)
1. Definition
2. Prony brake test
B. Indicated Horsepower (ihp)
1. Definition
2. Oscilloscope test
C. Friction Horsepower (fhp)
1. Definition
2. Method of determination
D. SAE Horsepower
1. Definition
2. Purpose
E. Engine Torque
1. Definition
2. Method of determination

VI. Engine Efficiency
A. Mechanical Efficiency
1. Relationship between bhp and ihp
2. Formula: *ME = bhp ÷ ihp (answer in percent)*
B. Thermal Efficiency
1. Relationship between power output and energy in fuel burned
2. Heat losses
a. Cooling by water and oil (35 percent)
b. Lost in exhaust gases (35 percent)
3. Limitations to thermal efficiency
a. Excessive heat
b. Breakdown in lubrication system
C. Volumetric Efficiency
1. Relationship between amount of fuel-air mixture actually entering cylinder and amount that could enter
2. Factors affecting volumetric efficiency
a. Engine rpm
b. Temperature of fuel-air mixture

VII. Overall Efficiency
A. Rolling Resistance
B. Air Resistance
C. Acceleration (overcoming of inertia)

Section 5: Engine Construction

I. Manifolds
A. Methods of Manufacture
1. Materials used
2. Design
B. Intake Manifold
1. Purpose
2. Types
3. Location
C. Exhaust Manifolds
1. Purpose
2. Types
3. Location
4. Manifold heat-control valve
D. Manifold Inspection
1. Check for warpage
2. Check for cracks
3. Check surface
4. Check heat-control valve for freeness

II. Cylinder Head
A. Methods of Manufacture
1. Materials used
2. Design
B. Types
1. Valve-in-head
2. Flat head
C. Purpose
1. Combustion chamber
2. Water jackets
3. Intake and exhaust ports and passages
D. Rocker-Arm Cover

III. Oil Pan
A. Methods of Manufacture
1. Materials used
2. Design
B. Purpose
1. Baffles
2. Oil troughs
3. Nozzles
4. Drain plug
5. Seals
C. Oil Pump
1. Purpose
2. Types
a. Gear
b. Dual rotor
3. Location
4. Oil intake
5. Screen

IV. Valve Train
A. Camshaft
1. Methods of manufacture
2. Purpose
3. Types
a. Stock
b. Other grinds
4. Location
5. Components
a. Cam lobes
b. Fuel pump eccentric
c. Distributor drive gear
d. Bearing journals
e. Thrust plate
6. Camshaft timing gear or sprocket
7. Timing chain
B. Valve Lifters (Tappets)
1. Purpose
2. Location
a. I-head

b. L-head
c. F-head
3. Types
a. Solid
b. Adjustable
c. Hydraulic
C. Push Rod
1. Purpose
2. Location
3. Types
a. Tubular
b. Solid
D. Rocker Arm and Shaft
1. Purpose
2. Rocker-arm types
a. Cast
b. Forged
c. Stamped steel
3. Rocker-arm shaft
a. Location
b. Purpose
E. Valve Guides
1. Purpose
2. Location
3. Types
a. Pressed in
b. Slip in
c. Integral
4. Lifter guides
F. Valves
1. Methods of manufacture
2. Purpose
a. Intake
b. Exhaust
3. Types (past and present)
a. Rotary
b. Sliding-sleeve
c. Poppet or mushroom
4. Parts of poppet valve
a. Head
b. Margin
c. Face
d. Neck
e. Stem
f. Spring-retainer lock groove
g. Tip
5. Valve cooling
a. Purpose
b. Method
(1) Water jackets
(2) Water-distributing tube
c. Sodium valves
6. Valve seat
a. Purpose
b. Types
(1) Direct
(2) Inserts
G. Valve Springs
1. Purpose
2. Types
a. Single
b. Double
3. Retainers
a. Stationary
b. Free type
c. Positive type
4. Retainer locks (keepers)
a. Conical
b. Pin
c. Horseshoe
H. Relationship of Parts in L-Head Engine
I. Relationship of Parts in I-Head Engine
J. Relationship of Parts in F-Head Engine

V. Piston and Connecting Rod Assembly
A. Piston
1. Methods of manufacture
2. Purpose
3. Parts of piston
a. Head
b. Ring grooves
c. Ring lands
d. Pin boss and bushing
e. Skirt
(1) Major thrust face
(2) Minor thrust face
4. Expansion control
a. Steel rings
b. Struts
c. Slots
d. Cam ground pistons
B. Piston Rings
1. Methods of manufacture
2. Purpose
a. Seal compression
b. Control oil
3. Types
a. Compression
(1) Plain
(2) Tapered
(3) Grooved
b. Oil control
4. Ring joints
a. Types
(1) Butt
(2) Angle
(3) Lap
b. Ring gap
5. Ring expanders
a. Purpose
b. Location
6. Coated rings
7. Chrome-plated rings
C. Piston Pin
1. Purpose

2. Types
   a. Center-lock
   b. End-lock
   c. Slotted
   d. Press-fit
   e. Floating
D. Connecting Rod
   1. Purpose
   2. Method of manufacture
   3. Parts
      a. Rod
      b. Little end (bushing)
      c. Big end
      d. Rod cap
      e. Oil holes
      f. Rod nuts
         (1) Safe wire
         (2) Self-locking
         (3) Cotter pin
         (4) Palnut
      g. Tongue and groove
   4. Rod stretch and reconditioning
   5. Alignment of oil holes

VI. Bearings
   A. Methods of Manufacture
   B. Purpose
   C. Types
      1. Bushings
      2. Sleeve
      3. End thrust
      4. Poured
      5. Semi-fitted
      6. Precision insert: types of metal overlays
      7. Roller
      8. Ball
   D. Location
      1. Main bearings
      2. Connecting-rod bearings
      3. Camshaft bushings
      4. Piston pin bushings
      5. Clutch pilot-bushing or -bearing
      6. Camshaft thrust plate
   E. Oil Clearance
   F. Requirements
      1. Load-carrying capacity
      2. Fatigue resistance
      3. Embeddability
      4. Conformability
      5. Corrosion resistance
      6. Low wear rate

VII. Crankshaft
   A. Methods of Manufacture
      1. Materials used
      2. Design
   B. Purpose
      1. Connecting rod throws
      2. Main bearing journals
      3. Counterbalances
      4. Oil passages
      5. Oil slinger/thrust pad
   C. Flywheel
      1. Purpose
         a. Supplies inertia to crankshaft
         b. Engages with starter motor
         c. Driving member of clutch
      2. Location
   D. Crankshaft Timing-Gear or Sprocket
   E. Vibration Damper
      1. Purpose
      2. Construction
      3. Location

VIII. Cylinder Block
   A. Methods of Manufacture
      1. Materials used
      2. Design
   B. Purposes
      1. Cylinders
      2. Water jackets
      3. Welch plugs (soft plugs)
      4. Intake and exhaust ports and passages
      5. Valve-lifter chamber
      6. Oil galleries
      7. Pressure relief valve
   C. Engine Serial Number Location

IX. Gaskets
   A. Materials Used
      1. Soft metal
      2. Fiber
      3. Rubber
      4. Neoprene
      5. Cork
      6. Leather
   B. Purpose
   C. Types and Location
      1. Cylinder head
      2. Oil pan
      3. Push-rod cover
      4. Valve cover
      5. Manifolds
      6. Timing-gear cover and seal
      7. Main bearing seal

X. Miscellaneous Components
   A. Bell Housing
      1. Purpose
      2. Dust cover
   B. Engine Mounts

Section 6: Engine Lubrication System

I. Purpose of Lubrication System
   A. Lubricate Moving Parts to Prevent Wear
   B. Lubricate Moving Parts to Reduce Power Loss from Friction
   C. Act as Cooling Agent

D. Absorb Shock Between Bearings and Other Moving Parts
E. Form Seal Between Piston Rings and Cylinder Walls
F. Act as Cleaning Agent

II. Theory of Lubrication
A. Friction Bearings
B. Antifriction Bearings
C. Oil Passages
1. Circulation
2. Location
a. Internal
b. External

III. Source of Oil
A. History and Development
1. Discovery
2. Early uses
3. Oil and automobile
B. Modern Processes
1. Modern oil fields
2. Refining

IV. Properties of Oil
A. Viscosity
1. Body
2. Fluidity
B. Viscosity Ratings
1. Viscosimeter
2. Temperature
C. Viscosity Index
D. Resistance to Carbon Formation
E. Additives
1. Oxidation inhibitors
2. Antifoam agents
3. Detergents
4. Antiwear additives
5. Acid inhibitors
6. Varnish inhibitors
7. Sludge inhibitors

V. Water Sludge Formation
A. Process of Formation
B. Prevention of Sludge
1. Types of car operation
2. Temperature
3. Crankcase ventilating system

VI. Service Ratings of Oil (API)
A. MS
B. MM
C. ML
D. DS
E. DG

VII. Oil Changes
A. Purpose
1. Replace contaminated oil
2. Keep engine clean
3. Drain oil
a. From below
b. From above
B. Oil Change Interval
1. Factory recommendations
a. For engine with oil filter
b. For engine without oil filter
2. Other recommendations

VIII. Oil Consumption
A. Causes
1. Engine condition
2. Driving conditions
3. Mixture of oil types
B. Corrections

IX. Types of Lubrication Systems
A. Splash
B. Pressure Feed
C. Combination of Splash and Pressure Feed

X. Oil Pumps
A. Purpose: Circulation
B. Location
1. Internal
2. External
C. Types
1. Gear
2. Dual rotor
3. Vane
4. Plunger
D. Theory of Operation
1. Capacity
2. Priming
E. Method of Drive
1. Distributor
2. Cam gear
3. Crankshaft gear
F. Parts
1. Camshaft gear
2. Shaft
3. Body
4. Drive gear
5. Idler gear
6. Cover
7. Intake
8. Outlet
9. Screen

XI. Relief Valves
A. Purpose
B. Types
1. Plunger
2. Ball
C. Location
1. Block
a. Internal
b. External
2. Pump
D. Operation

XII. Oil Filters
A. Purpose
B. Location

C. Types
   1. By-pass
   2. Full-flow
D. Theory of Operation
E. Change Interval

XIII. Oil Coolers
A. Purpose
B. Types
C. Location
D. Operation
E. Transference of Heat

XIV. Oil-Pressure Indicators
A. Purpose
B. Location
   1. Dash unit
   2. Engine sender unit
C. Types
   1. Bourdon tube
   2. Electric
      a. Balancing coil
      b. Bimetal
      c. Warning light

XV. Crankcase Ventilation
A. Purpose
B. Types
   1. Standard
   2. Positive
C. Operation
D. Smog Control

XVI. Oil-Level Indicators
A. Purpose
B. Location

Section 7: Engine Cooling System

I. Purpose of Engine Cooling System
A. Maintain Efficient Engine Operating Temperature
B. Regulate Engine Operating Temperature to Driving Conditions
C. Maintain Temperature Limits
   1. Results of overheating
      a. Breakdown of lubrication oil
      b. Damage to bearing and moving parts
      c. Warpage and cracking of cylinder head
      d. Loss of coolant
      e. Stoppage of water circulation
      f. Changes in clearance
   2. Results of overcooling
      a. Loss of engine thermal efficiency
      b. Excessive consumption of fuel
      c. Dilution of engine oil
      d. Formation of sludge
         (1) Lubrication failure
         (2) Corrosive acids
      e. Changes in clearance

II. Types of Cooling Systems
A. Air-Cooled
   1. Cooling fins
   2. Circulation of air
B. Liquid-Cooled
   1. Thermosyphon
      a. Gravity
      b. Natural laws of water circulation (convection)
   2. Forced circulation
      a. Method of circulation
      b. Circulation under pressure

III. Four Essentials of Cooling System
A. Absorption
B. Circulation
C. Radiation
D. Control

IV. Water Jackets
A. Cylinder Block
B. Cylinder Head
C. Water-Distribution Tubes
D. Water Nozzles
E. Soft Plugs (Welch Plugs)

V. Water Pump
A. Purpose
B. Type Used
C. Location
D. Parts
   1. Housing
   2. Water inlet
   3. Water outlet
   4. Impeller
   5. Shaft
   6. Seals
   7. Pulley
   8. Bearings
E. Theory of Operation
F. Method of Drive

VI. Engine Fan
A. Purpose
B. Location
C. Method of Drive

VII. Radiator
A. Purpose
B. Compartments
   1. Air passages
   2. Water passages
C. Radiator Types
   1. Ribbon cellular
   2. Tube and fin
D. Radiator Parts
   1. Radiator shell
   2. Radiator core
      a. Top header
      b. Water tubes
      c. Air fins

3. Fan shroud
4. Shell attaching bolts
5. Water inlet
6. Water outlet
7. Upper tank
8. Lower tank
9. Connecting hoses
10. Drain cock

E. Draining Radiator
1. With pressure cap
2. Without pressure cap

VIII. Thermostats
A. Purpose
B. Location
1. Water-cooled
2. Air-cooled
C. Types
1. Bellows
2. Bimetallic
3. Solid expansion
D. Thermostat Parts
1. Case
2. Bellows or spring
3. By-pass valve
4. Air-bleed hole
E. Principles of Operation
1. Temperature ranges
2. Water circulation: cold
3. Water circulation: hot

IX. Radiator Pressure Cap
A. Purpose
1. Improve cooling efficiency
2. Prevent evaporation
3. Prevent surge losses
B. Physical Principles
1. Pressure increase
2. Boiling-point effects
C. Pressure Cap Parts
1. Vacuum valve
2. Blowoff valve
3. Overflow pipe
D. Pressure Cap Capacities

X. Temperature Indicators
A. Purpose
B. Location
1. Dash unit
2. Engine unit
C. Indicator Types
1. Vapor pressure
2. Electrical
a. Balancing coil
b. Bimetal thermostat

XI. Antifreeze Solutions
A. Purpose
B. Physical Principles
1. Freezing: expanding force
2. Prevention of freezing
C. Requirements for Good Antifreeze Solution
1. Mixes readily with water
2. Circulates freely
3. Must not damage system by corrosion
4. Must not freeze
D. Inadequate Antifreeze Solutions
1. Salt solutions
2. Sugar solutions
3. Oil products
4. Kerosene
5. Glycerin
E. Temporary Antifreeze Solutions
1. Alcohol
2. Alcohol base materials
a. Low boiling point
b. Evaporation
F. Permanent Antifreeze Solutions
1. Ethylene glycol materials: percentages
2. Methanol materials: percentages

XII. Radiator Additives
A. Cooling System Cleaners
B. Sealer
C. Acid and Rust Inhibitor

XIII. Special Features
A. Surge Tank
B. Radiator Covers
C. Radiator Screens

XIV. Hot-Water Car Heater
A. Purpose
B. Parts
1. Heater radiator
2. Fan motor
3. Fan blades
4. Connecting hoses
C. Theory of Operation

Section 8: Engine Fuel System

I. Purpose of Engine Fuel System
A. Store Fuel
B. Deliver Fuel to Engine
C. Mix Fuel and Air to Proper Proportions

II. History and System Types
A. Gravity Feed System
1. Tank located higher than carburetor
2. System used about 1900 to 1931
B. Vacuum System
1. Vacuum tank located higher than carburetor
2. Intake-manifold vacuum applied to vacuum tank
3. Gravity from vacuum tank to carburetor
4. System invented about 1920
C. Pressure System
1. Fuel tank under 2 to 4 pounds higher pressure than atmospheric
2. Hand pump on dash for starting

3. Engine pump used after running
4. System used in some higher-priced cars about 1915

D. Propane and Butane Systems
1. Creates own pressure
2. Stored as a liquid
3. Released as a vapor
4. Used in localities where readily available
5. Used now on some installations

E. Pump System
1. Draws from tank by vacuum
2. Forces to carburetor by pressure
3. Now standard type of installation

III. Fuel Tanks
A. Purpose
B. Location
C. Structure
1. Metal: spark proof
2. Corrugation
3. Baffles
4. Filler pipe
5. Filler cap
6. Vent
7. Gauge sending-unit location
8. Fuel line
9. Filter screen
10. Drain plug

IV. Fuel-Level Indicators
A. Purpose
B. Types
1. Stick
2. Hydrostatic
3. Mechanical
4. Electric
a. Bimetal type
b. Balancing coil type

V. Fuel Lines
A. Purpose
B. Types
1. Steel
2. Copper
3. Flexible
C. Fittings
1. Compression
2. Flared
D. Location
1. Vibration
2. Sharp edges
3. Heat

VI. Fuel Pumps
A. Purpose
B. Location
C. Diaphragm Types
1. Bellows
2. Plunger
3. Impeller
4. Combination
D. Operation

VII. Carburetion
A. Carburetor Fundamentals
1. Purpose of carburetor
2. Physical principles
a. Atmospheric pressure
b. Vacuum
c. Evaporation
d. Atomization
B. Carburetor Basic Parts
1. Air horn
2. Venturi
3. Fuel nozzle
4. Throttle valve
C. Fuel Mixtures
1. Rich
a. Ratio
b. Conditions when needed
2. Lean
a. Ratio
b. Conditions when needed
D. Float Circuit
1. Purpose
2. Operation
3. Fuel-pump control
a. Leverage
b. Hydraulics of surface areas
4. Concentric
a. Horseshoe float
b. Dual-float assembly
5. Dual-float circuits
6. Float-bowl vent
a. Balanced
b. Unbalanced
7. Air bleed: purpose
8. Adjustment
a. Fuel level too low
b. Fuel level too high
E. Idle- and Low-Speed Circuit
1. Purpose
2. Operation
a. Air-horn conditions
b. Idle circuit
c. Low-speed circuit
d. Air bleeds
3. Adjustment
a. Idle speed
b. Idle mixture
F. High-Speed Part-Load Circuit
1. Purpose
2. Operation
a. Mechanical (metering rod)
b. Vacuum (power valve)
G. High-Speed Full-Power Circuit
1. Purpose

2. Operation
   a. Mechanical (metering rod)
   b. Vacuum (power valve)
   c. Combination mechanical and vacuum

H. Accelerator-Pump Circuit
   1. Purpose
   2. Operation
      a. Plunger
      b. Diaphragm
   3. Adjustment

I. Choke Circuit
   1. Purpose
   2. Manual operation
   3. Vacuum operation
   4. Electric
   5. Adjustment

J. Other Carburetor Features
   1. Throttle cracker
   2. Fast idle
   3. Antipercolator
   4. Throttle-return checks
      a. Dashpot
      b. Diaphragm
   5. Distributor-vacuum circuit
   6. Starter switches
   7. Kick-down switches
   8. Governors

K. Carburetor Types
   1. Fuel entry to manifold
      a. Downdraft
      b. Updraft
      c. Side draft
   2. Barrels
      a. Single barrel
      b. Two barrel
      c. Four barrel
         (1) Primaries
         (2) Secondaries
         (3) Progressive linkage
         (4) Circuit variations from single and two barrel
   3. Multiple carburetors
      a. Two two-barrels
      b. Three two-barrels
      c. Two four-barrels
         (1) Unison linkage
         (2) Progressive linkage
         (3) Vacuum-controlled linkage
   4. Fuel injection
      a. Combustion chamber
      b. Intake manifold

VIII. Air Cleaners
   A. Purpose
   B. Oil-Bath Type
      1. Operation
      2. Service
   C. Dry Type
      1. Operation
      2. Service

IX. Fuels
   A. Fuels in General Use
      1. Gasoline
      2. Benzene
      3. Benzol
      4. Alcohol
      5. Natural gas
      6. Fuel oil
      7. Propane and butane
   B. Physics of Carburetion and Combustion of Gasoline
      1. Combustion
      2. Compression
      3. Fuel knock (detonation and preignition)
         a. Heat on irregular surfaces
         b. Compression ratio
         c. Ignition timing
         d. Rapid burning
            (1) Antiknock value
            (2) Measurement of antiknock value
            (3) Chemical control
            (4) Weight of air
            (5) Vaporization
               (a) Spraying
               (b) Heat
               (c) Vacuum
            (6) Volatility
               (a) Starting
               (b) Vapor lock
               (c) Warm-up
               (d) Acceleration
               (e) Economy
               (f) Crankcase dilution
               (g) Evaporation during nonoperation
               (h) Atmospheric conditions
               (i) Blend
            (7) Harmful chemicals and gum

Section 9: Electrical System

I. Purpose of Electrical System
   A. Cranks Engine for Starting
   B. Helps Create High-Voltage Surge for Ignition
   C. Provides Electrical Current for Electrically Operated Devices

II. Components of Electrical System
   A. Storage Battery
   B. Cranking Motor
   C. Generator/Alternator
   D. Regulators
   E. Ignition Distributor (Timer)
   F. Magneto
   G. Coil
   H. Spark Plugs
   I. Wiring
   J. Switches
   K. Accessory Units

III. Fundamentals of Electricity
- A. Characteristics
  - 1. Atoms
    - a. Electrons: negative (–)
    - b. Protons: positive (+)
  - 2. Attraction of opposite charges
  - 3. Repulsion of like charges
  - 4. Accumulation of electrons: electric charge
  - 5. Accumulation of electrons by generators and batteries
- B. Principles of Electric Current
- C. Conductors
  - 1. Example: copper
  - 2. Free movement of electrons
- D. Insulators
  - 1. Example: rubber
  - 2. Few free electrons
  - 3. Prevention of loss of electrons from conductors
- E. Electrical Terms
  - 1. Voltage
    - a. Electric pressure
    - b. Pressure measured in volts
  - 2. Amperage
    - a. Current flow
    - b. Flow measured in amperes
  - 3. Resistance
    - a. Resistance to electrical pressure
    - b. Resistance measured in ohms
- F. Ohm's Law
- G. Circuits
  - 1. Series
    - a. Current flow same in all parts of circuit
    - b. Total resistance equal to sum of individual resistances
    - c. Voltage equal to sum of potential differences across each of individual resistances
  - 2. Parallel
    - a. Voltage same across all resistances
    - b. Total current equal to sum of currents through branches
    - c. Total resistance equal to voltage across resistances divided by total circuit current
  - 3. Series-parallel
    - a. Certain components in series
    - b. Certain components in parallel
- H. Magnetism
  - 1. Magnets: characteristics
  - 2. Lines of force
    - a. Stretch between magnetic poles
    - b. Tend to be parallel (do not cross)
- I. Electromagnetism
  - 1. Lines of force produced by current flow
  - 2. Electromagnets: combined magnetic field
  - 3. Permeability
    - a. Iron core in coil
    - b. Increased magnetic field

IV. Storage Battery
- A. Purpose
- B. Construction
  - 1. Container
  - 2. Plates
    - a. Positive: lead peroxide
    - b. Negative: sponge lead
  - 3. Separators
  - 4. Post straps
  - 5. Terminal posts
  - 6. Cell covers
  - 7. Cell connectors (internal and external)
  - 8. Vent plugs
  - 9. Sealing compound
- C. Principles of Chemical Activity
- D. Battery Ratings
  - 1. Definition
    - a. Total area
    - b. Volume of active plate material
    - c. Amount of electrolyte
    - d. Strength of electrolyte
  - 2. Methods of rating
    - a. Ampere-hour capacity
    - b. Cold rating

V. Cranking Motor
- A. Purpose
- B. Principles of Motor Operation
  - 1. Magnetic field around conductor
  - 2. Conductor in magnetic field
  - 3. Lines of force action
  - 4. Current flow
- C. Construction of Cranking Motor
  - 1. Basic elements
    - a. U-shaped conductor
    - b. Contacts
    - c. Brushes
    - d. Magnets
    - e. Battery
  - 2. Components of cranking motor
    - a. Armature
    - b. Field-frame assembly
    - c. Commutator end-head assembly
    - d. Brushes
    - e. Drive housing
    - f. Drive mechanism
    - g. Solenoid assembly
    - h. Shift-lever assembly
- D. Cranking-Motor Drives
  - 1. Purpose
  - 2. Types
    - a. Overrunning clutch
    - b. Inertia
      - (1) Bendix drive
      - (2) Dyer drive
      - (3) Folo-thru drive
    - c. Principles of operation

E. Cranking-Motor Controls
   1. Purpose
   2. Manual operation
   3. Automatic control: solenoid
   4. Methods of operation
F. Simple Wiring Diagram

VI. Direct-Current Generator
A. Purpose
B. Principles of Generator Operation
   1. Conductor moving through magnetic field
   2. Current flow
   3. Magnetic lines of force
   4. Rate of cutting lines of force
C. Construction of Generator
   1. U-shaped conductor
   2. Contacts
   3. Brushes
   4. Field coils
   5. Drive unit
D. Components of Generator
   1. Frame assembly
      a. Frame
      b. Field coil
      c. Pole shoes
      d. Terminals
   2. Armature
   3. Commutator end frame
   4. Brushes
   5. Drive end frame
   6. Fan
   7. Pulley
E. Output control
F. Wiring diagram

VII. Generator Regulators (Conventional and Transistorized)
A. Purpose
B. Cutout Relay (Circuit Breaker)
   1. Purpose
   2. Construction
      a. Two windings
         (1) Current
         (2) Voltage
      b. Core
      c. Armature
      d. Contacts
      e. Spring
   3. Operation
      a. Voltage buildup
      b. Magnetic field produced
      c. Spring tension overcome
      d. Armature closes
      e. Generator current flowing
         (1) Current flows to battery from generator
         (2) Magnetic field buildup
         (3) Points held closed by current
      f. Generator current flowing
         (1) Current flows from battery to generator
         (2) Magnetic fields reversal-weakened
         (3) Contact points separate
         (4) Circuit opens
C. Voltage Regulator
   1. Purpose
      a. Prevents excessive voltage
      b. Maintains constant voltage
   2. Operation
D. Current Regulator
   1. Purpose
      a. Regulates current to battery
      b. Protects battery
   2. Operation

VIII. Alternating-Current Generator System (Alternator)
A. Wiring Diagram of Alternator Circuit
B. Function of Alternating-Current Generator (Alternator)
C. Construction and Description of Parts
D. Principles of Alternator Operation

IX. Ignition System (Conventional and Transistorized)
A. Purpose
B. Components
   1. Battery
   2. Switch
   3. Resistor
   4. Coil
   5. Distributor
   6. Spark plugs
   7. Wiring
   8. Switch
   9. Timer
C. Distributor
   1. Purpose
      a. Closes and opens circuit between battery and coil
      b. Distributes high-voltage surge to spark plugs
   2. Location
   3. Construction
      a. Housing
      b. Drive shaft
         (1) Breaker cam
         (2) Advance mechanism
      c. Breaker plate
      d. Contact points
      e. Rotor
      f. Cap
   4. Operation
   5. Spark advance mechanisms
      a. Purpose
      b. Types and operation
         (1) Centrifugal
         (2) Vacuum
         (3) Combination
         (4) Full vacuum
D. Spark Plugs
   1. Purpose
   2. Location

3. Construction
   a. Shell
   b. Insulator
   c. Electrodes
      (1) Center
      (2) Ground
   d. Terminal
   e. Sealing methods
   f. Threads
4. Heat ranges
   a. Heat path
   b. Hot
   c. Cold
5. Spark gap
6. Operation

E. Ignition Coil
1. Purpose
2. Location
3. Construction
   a. Case
   b. Coils (wire)
      (1) Primary
      (2) Secondary
   c. Iron core
   d. Insulating materials
   e. Terminals
      (1) Primary
      (2) Secondary
4. Operation
   a. Creating magnetic field
   b. Collapsing magnetic field: primary
   c. Collapsing magnetic field: secondary
   d. Capacitor (condenser) effect

F. Ignition Switch
1. Purpose
2. Operation

G. Wiring Diagram
1. Primary circuit
2. Secondary circuit

H. Ignition Timing Marks
1. Purpose
2. Location

X. Electrical Circuits
A. Horn
B. Lights (Internal)
C. Running Lights
1. Headlights
2. Taillights
3. Stop lights
4. Back-up lights

D. Directional Signals
E. Accessories

XI. Relays
A. Purpose
B. Uses
1. Lighting
2. Horn

Section 10: Engine-Trouble Diagnosis

I. Engine Failure
A. Compression Loss
B. Failure of Engine to Turn Over
C. Ignition Troubles
D. Carburetion Troubles

II. Compression Loss
A. Causes
1. Cylinder bore wear
2. Improper valve timing
3. Improper valve seating
4. Cylinder-head gasket
5. Cracks

B. Trouble Checklist
1. Crank engine; diagnose compression noises
2. Make compression test
3. Observe valve action
4. Check valve adjustment

III. Failure of Engine to Turn Over
A. Causes
1. Piston and ring fit
2. Bearing clearances
3. Valve action
4. Lubrication system
5. Cooling system
6. Starting system

B. Trouble Checklist
1. Check lubricating oil
2. Check water
3. Turn crankshaft by hand, if possible
4. Observe valve action
5. Diagnose abnormal knocks and noises

IV. Carburetion Troubles
A. Causes
1. Carburetor circuits
   a. Float
   b. Idle
   c. Part throttle
   d. High speed
   e. Accelerator pump
   f. Choke
2. Fuel pump
3. Fuel tank
4. Fuel lines
5. Manifold and exhaust system

B. Trouble Checklist
1. Check fuel level in tank
2. Check accelerator action
3. Remove carburetor fuel line; crank engine
4. Check fuel pump
5. Test fuel lines
6. Check air cleaner

V. Ignition Troubles
A. Causes
1. Primary system
   a. Battery

b. Switch
c. Primary winding
d. Connections
e. Voltage-dropping resistor
f. Coil primary-winding
g. Distributor points
h. Capacitor (condenser)
i. Ground return to battery
2. Secondary system
a. Coil secondary-winding
b. Distributor rotor
c. Distributor cap
(1) Broken
(2) Moisture
d. High-tension wiring
e. Spark plugs
f. Ground return through part of primary system

B. Trouble Checklist (Use of Jumper Wire and Voltmeter)
1. Remove coil wire from distributor
a. Crank engine
b. Check spark
2. Check battery side of coil
a. Check switch
b. Inspect wiring and battery connections
3. Check distributor side of coil
a. Check points
b. Inspect wiring and connections
c. Check capacitor (condenser)
4. Check ignition timing

Section 11: Clutches

I. Purpose of Clutch
A. Used with Standard Transmissions
B. Couples or Uncouples Engine and Transmission
1. Coupled position (normal running)
a. Power to transmission
b. In gear: power to rear wheels
2. Uncoupled position
a. Allows gears to be shifted easily
b. Allows engine to run with transmission in gear
C. Provides Gradual but Positive Application of Engine Power to Power Train
1. Minimizes shock
2. Provides comfortable starts

II. Principles of Operation
A. Frictional Contact Made Between Two Smooth Metallic Driving Surfaces and Facings Riveted to Driven Disk
1. Flywheel and pressure plate: driving surfaces
2. Friction disk: driven plate
B. Flywheel, Pressure Plate, and Friction Disk Held Together by Pressure Springs
C. Hub of Friction Disk Splined to Clutch Shaft
D. Clutch Uncoupled by Release of Spring Pressure on Pressure Plate by Operation of Clutch Pedal
E. Flywheel and Pressure Plate Permitted to Turn Independently of Friction Disk

III. Types of Clutches
A. All Similar in Construction and Operation
1. Expanding clutches
2. Contracting clutches
3. Cone clutch
4. Dry-disk clutches
a. Coil pressure-spring type
b. Diaphragm-spring type
c. Crown pressure-spring type
5. Multiple dry-disk clutches
6. Oil-bath disk clutches
a. Multiple disk
b. Single disk
B. Most Commonly Used Clutch: Single Dry-Disk

IV. Friction Disk
A. Hub Assembly
1. Splined hub
a. Splined to clutch shaft
b. Allows movement lengthwise
c. Forces hub to turn with clutch shaft
d. Must fit snugly yet without drag or bind
2. Torsional springs
a. Placed between drive washers
b. Absorbs torsional vibration from engine
c. Absorbs some engaging shock
3. Hub flange
4. Drive washers
5. Molded friction washer
a. Located between hub flange and drive washer
b. Prevents oscillation between hub flange and drive washer
6. Movement of hub flange limited by stop pin
B. Disk Assembly
1. Friction rings or clutch facings
a. Made of frictional material
(1) Asbestos main part of composition
(2) Heat-resistant materials
b. Provides proper amount of slipping when starting
c. Provides positive nonslipping drive when engaged
d. Usually riveted to cushioning springs
2. Cushioning springs
a. Provide cushioning effect as clutch is engaged
b. Produce smoother engagement
c. Consist of waved cushion springs
d. Waves compress when engaged

V. Pressure-Plate Assembly
A. Pressure Plate and Flywheel
1. Both driving surfaces
2. Surfaces smooth, parallel
3. Friction disk between driving surfaces
B. Clutch Cover
1. Bolted to flywheel
a. Becomes part of flywheel

b. Rotates with flywheel
c. All parts of pressure-plate assembly attached to clutch cover
2. Houses pressure spring arrangement
3. Houses clutch release mechanism

C. Pressure Springs
1. Coil
a. Contains three to nine springs
b. Spring loads friction disk between pressure plate and flywheel when coupled
c. Clutch released by compression of springs
2. Diaphragm (tapering-finger type)
a. Provides spring ~~pressure to~~ pressure plate
b. Acts as release levers
c. Reacts similarly to bottom of oil can when depressed
(1) Tapered fingers depressed
(2) Diaphragm pivots on pivot ring
(3) Outer edge raises
(4) Works against retracting spring to pressure plate
(5) Pressure plate pulled away from friction disk
d. Clutch engaged by built-in spring tension of diaphragm
3. Crown
a. Variation of diaphragm type
b. Diaphragm formed of single corrugated plate of spring metal
c. Action (same as in V.C.2.c.)

D. Release Levers
1. Purpose: to disengage clutch by relieving spring pressure to pressure plate
a. Coil-spring type
(1) Usually three levers
(2) Adjustable
(a) Adjustment screws
(b) Uniform pressure
b. Diaphragm-spring type
(1) Tapered fingers
(2) Nonadjustable
c. Crown-spring type
(1) Corrugated edge release
(2) Nonadjustable
2. Release levers depressed by throw-out bearing

VI. Throw-Out Mechanism
A. Clutch-Shaft Bearing Retainer and Sleeve
1. Front transmission bearing retained
2. Clutch shaft covered by sleeve
B. Throw-Out Collar
1. Slides on clutch shaft sleeve
2. Holds throw-out bearing
C. Clutch-Release Fork
1. Pivots on flywheel housing: ball stud
2. Moves throw-out bearing and collar forward
D. Throw-Out Bearing
1. Sealed ball bearing
2. Mounted on throw-out collar
3. Moved forward against release levers
4. Turns with the release levers
5. Depresses release levers, disengaging clutch

VII. Clutch Pedal and Linkage
A. Effects of Depressing Clutch Pedal
1. Clutch pedal arm depressed
2. Rotation of clutch pedal shaft
3. Adjusting link pushed or pulled
4. Rotation of cross shaft (if included)
5. Forward movement of throw-out fork
a. Forward movement of throw-out bearing
b. Release levers depressed
c. Pressure plate pulled away from friction disk
B. Effects of Releasing Clutch Pedal
1. Return of clutch pedal arm (assisted by return spring)
2. Clutch fork pulled back by linkage
3. Throw-out bearing pulled away from release levers
4. Return of release levers
5. Pressure plate, friction disk, and flywheel compressed by pressure springs
C. Hydraulically Clutch Operated

VIII. Clutch Shaft Support
A. Crankshaft End of Clutch Shaft Supported in End of Crankshaft or Center of Flywheel by Bushing, Roller, or Ball Bearing
B. Shaft to Be in Perfect Alignment (Will not "Whip")

IX. Semicentrifugal Clutch
A. Clutch Similar in Construction to Coil-Pressure-Spring Clutch
B. Weights Placed on Outer Ends of Release Levers
C. Added Pressure on Pressure Plate Exerted by Release Levers Because of Increased Speed
D. Centrifugal Action When Clutch Begins to Revolve

X. Clutch Trouble Diagnosis
A. Slipping
B. Chattering or Grabbing
C. Spinning or Dragging
D. Noises (When Engaged, Disengaged)
E. Pedal Pulsation
F. Friction-Disk Facing Wear

Section 12: Standard Transmissions and Overdrives

I. Purpose of Transmission
A. Provides Means of Varying Gear Ratios Between Engine and Rear Wheels
1. Ratios between engine and rear wheels (approximately)
a. Low gear ..... 12 to 1
b. Second gear ..... 8 to 1
c. High gear ..... 4 to 1
d. Reverse gear ..... 12 to 1
2. Ratios between clutch shaft and transmission main shaft
a. Low gear ..... 3 to 1

b. Second gear ..... 2 to 1
c. High gear ..... 1 to 1
d. Reverse gear ..... 3 to 1

B. Provides Reverse Gear for Backing Car

II. Transmission Gears
A. Relative Speed of Rotation (Gear Ratio)
1. Speed determined by number of teeth
a. Same number of teeth
(1) Turn at same speed
(2) Gear ratio: 1 to 1
b. Different number of teeth
(1) Smaller gear turns faster
(2) Large gear 24, smaller gear 12; gear ratio: 2 to 1
2. Number of teeth of driven gear divided by number of teeth of driving gear to determine ratio
B. Direction of Rotation
1. Turn in opposite directions (when two gears mesh)
2. Idler gears
a. Change direction of rotation
b. Do not change gear ratio between driving gear and driven gear
C. Types of Gears
1. Spur gear
2. Helical gear
3. Bevel gear
4. Skew-bevel gear
5. Worm gear
6. Rack gear
7. Pinion gear
8. Planetary gears
a. Internal or ring
b. Planetary
c. Sun
d. Spider or planet carrier

III. Torque (Transmission)
A. Change of Torque According to Gear Ratio
B. Torque in Any Turning Shaft or Gear
1. Torque applied to crankshaft
2. Torque supplied by crankshaft to gears in transmission so that gears turn
3. Torque carried through power train to rear wheels, causing rear wheels to turn
C. Torque on Gears Measured as Straight-Line Force at Distance from Center of Gears
D. Torque Ratio Opposite to Gear Ratio
E. Torque Increase Caused by Reduction of Gear Speed

IV. Basic Standard Transmission
A. Gears
1. Clutch or main drive gear
2. Cluster gear or countershaft gears
a. Countershaft drive gear
b. Countershaft second gear
c. Countershaft low gear
d. Countershaft reverse gear
3. Main-shaft low and reverse sliding gear
4. Main-shaft second and high sliding gear
5. Reverse idler gear
B. Shafts
1. Clutch or pilot shaft
2. Countershaft
3. Transmission main shaft
4. Reverse idler gear shaft
C. Thrust Washers
1. Countershaft
2. Main shaft
3. Reverse idler shaft
D. Bearings
1. Clutch gear bearing
2. Main-shaft rear bearing
3. Front pilot bearing
4. Countershaft bearings
5. Reverse idler bearing
E. Bearing Retainers
1. Clutch gear bearing retainer and throw-out bearing sleeve
2. Main-shaft bearing retainer
F. Transmission Case
G. Shifting Mechanism
1. Shifting forks
2. Shifting levers (side mount)
3. Cover

V. Operation of Basic Standard Transmission
A. Neutral
B. Low Gear
C. Second Gear
D. High Gear
E. Reverse Gear

VI. Gearshift Lever (Transmission)
A. H-Pattern
B. Two Separate Motions
1. Selection of gear assembly
2. Movement of gear assembly

VII. Transmission Synchronizing Device (Synchromesh)
A. Gears About to Mesh Made to Rotate at Same Speed
1. Mesh without clashing of gears
2. Easier shifting
3. Less wear on transmission parts
B. Synchromesh Types
1. Cone-clutch type (Ford)
2. Pin type (Dodge)

VIII. Constant-Mesh Transmission
A. Main-Shaft and Countershaft Second Gears Always in Mesh
B. Constant Mesh Used in Conjunction with Synchromesh
C. Principles of Operation

IX. Selector and Shifter (Transmission)
A. Types of Selector and Shifter Devices
B. Steering-Column Gearshift Mechanism
C. Floor-Shift Mechanism

X. Transaxle Units: Similar in construction and operation to other standard transmissions

XI. Purpose of Overdrive
- A. Establish More Favorable Gear Ratio
- B. Reduce Engine Speed at High Car Speed
- C. Provide More Economical Operation
- D. Lessen Engine and Accessory Wear Per Car Mile
- E. Drop Engine Speed About 30 Percent

XII. Method of Operation (Overdrive)
- A. Automatic
  1. Operation automatic at about 30 miles per hour
  2. Selective
     - a. Direct drive
     - b. Into overdrive: foot to be raised from accelerator
     - c. Out of overdrive
       - (1) Accelerator to be depressed "wide open"
       - (2) Throttle switch actuated
- B. Two Separate Controls
  1. Centrifugal device (governor)
  2. Electrical control (solenoid)

XIII. Freewheeling Mechanism (Overdrive)
- A. Coupling Between Two Shafts in Line with Each Other (Overrunning Clutch)
  1. Inner shell
  2. Outer shell
  3. Rollers between
- B. Solid Drive When Power Delivered to Input Shaft
- C. Output Shaft Overrun Because of Slowdown of Input Shaft
  1. Uncoupling of clutch
  2. Free turning of output shaft
  3. Input shaft on transmission
  4. Output shaft on propeller shaft
- D. Mechanical Principles of Operation

XIV. Planetary-Gear System (Overdrive)
- A. Components
  1. Outer ring gear (internal gears)
  2. Three planet pinions
  3. Planet-pinion cage
  4. Planet-pinion shafts
  5. Sun gear
  6. Sun-gear shaft
  7. Ring-gear shaft
- B. Principles of Operation
  1. Speed increase (sun gear stationary)
     - a. Planet-pinion cage turning
     - b. Sun gear stationary
     - c. Planet-pinion shafts carried around with cage
     - d. Planet pinions
       - (1) Rotate on shafts
       - (2) "Walk around" stationary sun gear
       - (3) Cause ring gear to rotate
  2. Speed increase (ring gear stationary)
     - a. Ring gear stationary
     - b. Planet-pinion cage turning
     - c. Sun gear rotating faster than cage
     - d. Driven member turning faster than driving member
  3. Speed reduction (ring gear turning)
     - a. Ring gear turning
     - b. Sun gear stationary
     - c. Planet-pinion cage turning slower than ring gear
     - d. Driven member turning slower than driving member
  4. Speed reduction (ring gear stationary)
     - a. Ring gear stationary
     - b. Sun gear turning
     - c. Planet pinions
       - (1) Turn on shafts
       - (2) "Walk around" ring gear
       - (3) Planet-pinion cage rotates
     - d. Cage rotating slower than sun gear
     - e. Driven member turning slower than driving member
  5. Reverse (planet-pinion cage stationary)
     - a. Planet-pinion cage stationary
     - b. Ring gear turning
     - c. Planet pinion
       - (1) Acts as reverse idlers
       - (2) Causes sun gear to turn in reverse direction to ring gear
     - d. Sun gear turning faster than ring gear
  6. Reverse (planet-pinion cage stationary)
     - a. Planet-pinion cage stationary
     - b. Sun gear turning
     - c. Ring gear turning opposite to and slower than sun gear
  7. Direct drive
     - a. Any two members locked together: then entire planetary-gear system locked, and input and output shafts turn at same speeds
     - b. No member held stationary and no two members locked together: system will not transmit power at all
- C. Application to Overdrive
  1. Ring gear attached to output shaft
  2. Planet-pinion cage splined to transmission main shaft
  3. Sun gear
     - a. May be permitted to turn free
     - b. May be locked in stationary position
       - (1) Ring gear (output shaft) forced to turn faster than transmission main shaft
       - (2) Transmission main shaft "overdriven" by output shaft

XV. Nomenclature (Overdrive)
- A. Clutch Cam
- B. Transmission Main Shaft
- C. Sun Gear
- D. Pinion-Cage Assembly
- E. Ring Gear
- F. Pinions

G. Output Shaft
H. Output-Shaft Bearing
I. Clutch-Cam Rollers
J. Control Shaft and Lever
K. Shift Fork
L. Solenoid Assembly
M. Control Rod
N. Sun-Gear Pawl
O. Blocker Ring
P. Sun-Gear Plate
Q. Governor

XVI. Overdrive Operation
A. Going into Overdrive
1. Car speed approaching 18 to 20 miles per hour
2. Sun-gear pawl retracted
3. Governor closing electrical contact
4. Solenoid energized
a. Spring loading solenoid pawl
b. Pawl held away by blocker ring
5. Accelerator pedal momentarily released by driver
a. Engine speed dropping
b. Freewheeling mechanism [illegible]g into action
c. Output shaft overrunning transmission main shaft
(1) Sun gear slowing and reversing direction
(2) Moving blocker ring
(3) Pawl moving inward
(a) Registers with notch on sun-gear control plate
(b) Locks control plate: stationary
(c) Locks sun gear: stationary
6. Driver accelerating and engine speed increasing: car going into overdrive (See XIV.B.1.)
B. Coming Out of Overdrive: Accelerator Pedal Depressed
1. Operates kick-down switch
2. Produces two actions
a. Opens solenoid circuit
(1) Attempts to withdraw pawl
(2) Considerable pressure against pawl
b. Grounds out ignition circuit
(1) Prevents engine from delivering power
(2) Relieves driving thrust on sun gear
(3) Pawl pulled back by solenoid
(4) Ignition circuit reopened by solenoid
C. Locking Out of Overdrive: Control Knob Pulled
1. Actuates control rod
2. Moves shift fork
a. Sun gear meshing with ring gear
b. Sun gear and ring gear locking
3. Locks sun-gear pawl
D. Reversing
1. Overdrive to be locked out (shaft mechanism reversed by transmission)
2. Overdrive control rod moved to lockout position when reverse shift is made

XVII. Overdrive Electrical Components
A. Battery
B. Ignition Switch
C. Relay
D. Kick-down Switch
E. Governor Switch
F. Ignition Coil and Distributor
G. Solenoid
1. Ground-out contact
2. Pull-in and hold-in winding
H. Wiring

Section 13: Automatic Transmissions

I. Main Sections of Automatic Transmission
A. Clutch Coupling or Torque Converter
B. Planetary Gear Box

II. Fluid Coupling (Torus)
A. Fluid Coupling Theory
1. Two fans facing each other
2. Oil coupling driving and driven torus (straight vanes in both torus units)
B. Engine Flywheel to Torus Cover Drive
C. Torus Cover to Driving Torus
D. Driven Torus and Input Shaft
E. Acts as Clutch

III. Torque Converter
A. Torque Converter Theory
1. Two fans facing each other
2. Stator redirecting oil at different angle to turbine
3. Torque multiplied
B. Engine Flywheel to Torque Converter Cover
C. Pump (Impeller) to Stator to Turbine
D. Turbine to Stator, Where Oil Is Returned to Pump
1. Turbine driving input shaft
2. Spiral vanes on turbine
E. Three Jobs of Stator
1. As stationary member for oil to push against
2. Redirects oil to pump
3. Overruns (like a bicycle coaster brake) when car reaches cruising speed
F. Torque Conversion Ended at Cruising Speed, with Coupling Taking Place

IV. Planetary Gears
(Review Section 12 of this outline.)

V. Automatic Transmission Operation
A. Oil Pump (to Supply Pressure)
B. Pressure Regulator Maintaining Constant Pressure
C. Shift Valve Directing Oil to Band-Servo or Clutch-Piston Action
D. Manual Valve Turning Oil Pressure On or Off
E. Governor
1. Operated by centrifugal force to make shifts occur automatically
2. Attached to transmission output shaft and thus sensitive to car speed

F. Throttle Valve
  1. Operated by accelerator pedal position to time shifts
  2. Works in opposition to governor pressure and thus sensitive to engine speed

VI. Automatic Transmission Maintenance
  A. Checking Oil Level
  B. Changing Oil

Section 14: Drive Lines

I. Purpose of Drive-Line Assembly
  A. Transfers Power from Transmission to Differential
    1. Change in angle
    2. Change in length
  B. Absorbs Rear-End Torque

II. Components of Drive Line
  A. Universal Joints
  B. Slip Joints
  C. Propeller Shaft
  D. Torque Tube
  E. Universal Ball Joint
  F. Supporting Members

III. Universal Joints
  A. Purpose
  B. Types
    1. Cross and Yoke
      a. Yoke
      b. Spider
      c. Trunnions
      d. Needle bearings
    2. Ball and trunnion
      a. Propeller shaft
      b. Pin
      c. Body
      d. Ball
      e. Needle bearings
      f. Centering button
      g. Grease cover
    3. Constant velocity
      a. Reasons for
      b. Construction
        (1) Body
        (2) Balls
  C. Operation
    1. Cross and yoke
    2. Ball and Trunnion
    3. Constant velocity
      a. Bendix
      b. Double cross and yoke

IV. Slip Joints
  A. Purpose
  B. Types
    1. Splines
    2. Built-in (ball and trunnion)

V. Types of Drive
  A. Torque-Tube Drive
    1. Construction
      a. Propeller shaft enclosed
      b. Universal joints
        (1) Type used
        (2) Number
      c. Universal ball joint
      d. Slip joints
      e. Support members
    2. Rear-end torque absorption
    3. Push delivered to front section of chassis
  B. Hotchkiss Drive
    1. Construction
      a. Propeller shaft exposed
      b. Universal joints
        (1) Type used
        (2) Number
      c. Slip joints
      d. Support members
    2. Rear-end torque absorption
    3. Push delivered to rear section of chassis
  C. Curved Flexible Shaft
    1. Construction
      a. Three-inch bow
      b. Ball-bearing pillow blocks
      c. No slip joints
      d. No universal joints
    2. Rear-end torque absorption
    3. Push delivered to rear section of chassis

Section 15: Rear Axles and Differentials

I. Purpose of Differential
  A. Transmits Rotary Power Through Right Angle
  B. Allows Different Rear-Axle Speed
    1. Prevents skidding in turns
    2. Improves steering control

II. Types of Differentials
  A. Conventional
  B. Nonslip (Limited Slip)
  C. Transaxle

III. Differential Components (Major)
  A. Differential-Side Gears
  B. Differential-Pinion Gears
  C. Differential-Pinion Shaft
  D. Differential Case
  E. Ring Gear
  F. Drive Pinion
  G. Drive-Pinion Carrier and Caps
  H. Differential-Bearing Adjusters
  I. Differential Bearing (Cone and Rollers)
  J. Axles (Axle Drive Shafts)

IV. Differential Power Flow
  A. Drive Pinion Driven by Propeller Shaft
  B. Drive Pinion Meshed with Ring Gear
  C. Ring Gear Bolted to Differential Case, Causing Case to Turn (Rotate)
  D. Differential-Pinion Shaft Mounted in Case

E. Differential-Pinion Gears Mounted on Shaft
F. Differential-Pinion Gears Meshed with Side Gears
G. Differential-Side Gears Splined to Axles

V. Differential Gear Action
A. Straight Ahead
1. Differential-pinion gears not rotating
2. Equal pressure exerted on side gears
3. Both wheels turning at same speed
B. Turning
1. Two pinion gears rotating on shaft
2. More turning movement exerted to outer side gear with same amount of torque
3. Outside wheel turning more rapidly

VI. Nonslip Differential
A. Similar in Construction to Conventional Type
B. Incorporates Two Sets of Clutch Plates (or Cones) Between Side Gears and Case
C. More Power Instead of Less Applied to Drive Wheel Hard to Turn

VII. Differential Gearing
A. Manner of Gear Reduction
B. Variance of Ratios According to Make and Application
1. Passenger cars (3.36:1 to 5:1)
2. Heavy- duty applications (9:1 by double reduction)
C. Calculation of Gear Ratio
D. Types of Gears
1. Spur (obsolete)
2. Spiral bevel (nearly obsolete)
a. More gear tooth contact
b. Even wear
c. Quieter operation
3. Hypoid
a. Similar to spiral bevel
b. Drive pinion lowered
c. Wiping action
d. Needs special lubricant
E. Nomenclature of Gears
1. Toe
2. Heel
3. Flank
4. Face
5. Pitch line
F. Gear Measurements
1. Clearance
2. Backlash

VIII. Rear Axles
A. Purpose
B. Types
1. Dead
2. Live
a. Semifloating
b. Three-quarter floating
c. Full-floating

IX. Differential Trouble Diagnosis
A. Noises Mistaken for Gear-Axle Noises
1. Road noise
2. Tire noise
3. Front-wheel bearing noises
4. Engine and transmission noises
B. Rear-Axle Bearing
1. Wheel bearing
2. Side gear and pinion
3. Pinion bearing
4. Ring and pinion noise
a. Drive
b. Coast
c. Float
d. Drive, coast, and float
5. Nonslip differential chatter

Section 16: Suspension Systems

I. Purpose
A. Support Weight of Front End of Car
B. Permit Steering of Car: Provide Safer Steering Control
C. Absorb Shock Through Springs
D. Provide Ride Control

II. Types of Front Suspension
A. Rigid Axle
B. Independent Front Suspension

III. Rigid Axle
A. Applications
1. Heavy-duty trucks and buses
2. Industrial vehicles
3. Early model autos
B. Construction
1. Beam
2. Steering knuckle
3. Kingpin
4. Leaf spring
C. Characteristics
1. Both front wheels affected by any surface change
2. Gyroscopic effect of tilted wheels

IV. Independent Front Suspension
A. Construction
1. Upper control arm
2. Lower control arm
3. Steering-knuckle support
4. Steering knuckle
5. Spring
6. Stabilizer shaft or sway bar
7. Shock absorber
B. Operating Characteristics
1. Wheels completely independent of each other
2. Better ride control
3. Smoother ride
C. Variations in Design of Independent Front Suspension
1. Coil spring
2. Transverse leaf spring

3. Torsion-bar spring
4. Ball-joint front suspension
   a. Replaces steering knuckle and support
   b. Uses spherical joints
   c. Uses fewer moving parts

V. Springs
A. Purpose
B. Operating Characteristics
1. Rate
2. Frequency
C. Types
1. Leaf
2. Coil
3. Torsion bar
4. Air suspension
D. Leaf Spring
1. Common types
   a. Semielliptic
   b. Quarter elliptic
2. Installation
   a. Transverse
   b. Longitudinal
3. Construction
   a. One or more leaves
   b. Master leaf
   c. Spring seat
   d. Center bolt
   e. U-bolt
   f. Rebound clips
   g. Spring eye
   h. Spring hanger
   i. Spring shackle
   j. Bushings
E. Coil Spring
1. Operating characteristics
   a. Free of friction
   b. Requires efficient shock absorber
2. Installation
   a. Requires linkage to support vehicle thrust
   b. Used primarily in front suspension
F. Torsion-Bar Spring
1. Operation
   a. Twisting action
   b. Free of friction
   c. Provision for adjustment
   d. Lightweight
2. Construction
   a. Spring-steel round shaft
   b. Linkage
   c. Adjustable anchor
G. Air Suspension
1. Operation
2. Construction
   a. Air-bag or air-spring assembly
   b. Air compressor
   c. Leveling valves

VI. Shock Absorbers
A. Purpose
1. Dampen spring oscillations
2. Keep wheels on pavement
3. Provide better control
4. Provide smooth ride
B. Types
1. Hydraulic
   a. Direct-acting
   b. Opposed-cylinder
   c. Parallel-cylinder
   d. Rotating-vane
2. Friction
C. Theory of Operation
1. Hydraulic principles
2. Forcing liquid through orifice
D. Testing

VII. Front-End Geometry
A. Definition
B. Purpose
1. Provide steering ease
2. Provide steering stability
3. Provide maximum tire life
4. Provide ride quality
C. Classifications
1. Camber
   a. Positive
   b. Negative
2. Kingpin inclination
3. Caster
   a. Positive
   b. Negative
4. Toe-in
5. Include angles
6. Toe-out on turns
D. Methods of Adjustment

Section 17: Steering Systems

I. Purpose of Steering System
A. Guide Car
B. Provide Easy Steering

II. Early Steering Systems
A. Tiller
B. Fifth-Wheel Steering

III. Ackerman Steering System
A. Front Wheels Supported on Pivots
B. Front Wheels Linked to Steering Wheel by Gears and Levers

IV. Classification of Steering Systems
A. Manual
B. Power
1. Integral or hydraulic
2. Linkage or mechanical

V. Manual Steering Gears
A. Recirculating Ball and Nut

B. Worm and Roller
C. Cam and Lever

VI. Steering Linkage
A. Steering Wheel
B. Steering Shaft
C. Steering Gear
D. Pitman Arm
E. Drag Link or Steering Connecting Rod
F. Tie Rod(s)
G. Relay Rod
H. Steering Arms
I. Steering Knuckles
1. Knuckle support
2. Kingpin
J. Ball Joints
K. Spindle
L. Wheel Bearings

VII. Power-Steering Operation
A. Hydraulic
1. Power-steering pumps
a. Construction
b. Operation
c. Location
2. Power-operating mechanism
a. Valve operation
b. Power cylinders
B. Mechanical
1. Construction
2. Operation
3. Location

Section 18: Tires and Tubes

I. Purpose of Tires
A. Provides Cushion
1. Absorbs shock
2. Tire flexes
B. Provides Frictional Contact
1. Minimizes skidding on turns
2. Provides for quick stops

II. Casing Construction
A. Plies (Variable Number)
B. Bead
C. Sidewall
1. Black
2. White
3. Colored
D. Curb Bead
E. Shoulder
F. Tread
1. Design
2. Purpose
a. Provide traction
b. Reduce surface area
c. Cool tire

III. Types of Tires
A. Solid
B. Pneumatic
1. Tube
2. Tubeless
3. Puncture-sealing
C. Materials
1. Natural rubber
2. Synthetic rubber

IV. Tire Sizes
A. Rim Size
B. Thickness at Sidewalls
1. Inflated
2. No load

V. Inner Tubes
A. Materials
1. Rubber
2. Synthetic
B. Air Valve
1. Stem
2. Core
3. Cap
C. Special Tubes
1. Puncture-sealing
2. Safety tube

VI. Tire Inflation
A. Proper Inflation
B. Low Pressure
1. Hard steering
2. Front-wheel shimmy
3. Steering kickback
4. Side of tread worn
5. Excessive flexing
a. Heat
b. Ply separation
6. Rim bruises
C. Excessive Pressure
1. Center of tread worn
2. Hard ride
3. Fabric rupture
D. Uneven Pressure (Pulls to Side)

VII. Tire Rotation
A. Purpose
B. Procedure

VIII. Causes of Tire Wear
A. Excessive Speed
B. Improper Inflation
C. Improper Front-Wheel Alignment
1. Excessive camber
2. Excessive toe-in or toe-out
D. Improperly Adjusted Brakes
E. Unbalanced Wheels
F. Incorrect Steering-Linkage Adjustment

IX. Recapping and Regrooving Tires

Section 19: Wheel Balance

I. Purpose of Wheel Balance
- A. Provide Ease of Steering
- B. Provide Comfortable Ride
- C. Provide Maximum Tire Mileage

II. Problems of Balancing Wheels
- A. Centrifugal Force
- B. Making Wheel Run True (Must Be Round)
- C. Flexing of Tire on Wheel
- D. Wheel Tramp (Bounce and Wobble)

III. Types of Wheel Imbalance (Out of Balance)
- A. Static
  1. Lies in plane of wheel rotation
  2. Causes front and rear wheels to bounce
- B. Dynamic
  1. Lies in zone on either or both sides of plane of rotation
  2. Causes front wheels to wobble as well as bounce

IV. Types of Balance
- A. Static
  1. Balanced wheel assembly, when on spindle, remains in fixed position regardless of how placed on the spindle
  2. Weight added or subtracted for equal distribution of wheel weight around its axis of rotation
- B. Dynamic
  1. Wheel rotation true, without wobble or shake
  2. Distribution of corrective weights on both sides of wheel

V. Tire Balance Marks
- A. Symbols Used for Marking Tires
- B. Markings to Line Up with Valve Stem Hole in Rim
- C. Less Accurately Balanced Assembly Marked by Red Dot

VI. Types of Wheel Run-Out
- A. Lateral
  1. Wheel alternately moves in and out from center of vehicle while rotating on its spindle
  2. Causes dynamic imbalance (out of balance)
  3. Checked by pointer near side wall
  4. Run-out not to exceed ⅛ inch
  5. Corrected by remounting tire on wheel or straightening wheel
- B. Eccentric or Radial
  1. Amount of spindle deviation from its center during wheel rotation
  2. Causes static and dynamic imbalance (out of balance)
  3. Checked by pointer near tire tread
  4. Corrected by shaving tread

Section 20: Automotive Brakes

I. Friction
- A. Definition
  1. Dry
  2. Greasy
  3. Viscous
- B. Factors Affecting Friction
  1. Pressure applied or load
  2. Roughness of surface
  3. Type of materials
- C. Types
  1. Static friction (at rest)
  2. Kinetic friction (in motion)
- D. Cause: Surface Irregularities
- E. Application
  1. Brake shoe and brake drum friction
     - a. Slows wheel rotation
     - b. Stops wheel rotation
  2. Tires to road surface friction
     - a. Sliding stop (kinetic)
     - b. Rolling stop (static)
  3. Front brakes larger than rear

II. Hydraulics
- A. Definition
- B. Physical Principles of Liquids
  1. Not compressible
  2. Transmit motion
     - a. Act as solids under pressure
     - b. Action and reaction
  3. Transmit pressure
     - a. Pressure equal throughout system
     - b. Pressure equal in all directions
     - c. Output force equals pressure times area
     - d. System pressure equal to input force divided by piston area

III. Hydraulic Brake Fluid
- A. Chemically Inert (Must Not Affect Metal and Rubber Parts)
- B. Must Not Vaporize at High Temperature
- C. Must Remain Fluid at Low Temperature
- D. Must Act as Lubricant
- E. Must Mix Readily With Other Hydraulic Fluids

IV. Types of Brakes
- A. Mechanical
- B. Hydraulic (Four-Wheel)
  1. Shoe
  2. Disk
  3. Caliper or spot
- C. Electric
- D. Air
- E. Vacuum

V. Components of Brake System
- A. Master-Cylinder Assembly
  1. Brake pedal
  2. Brake-pedal linkage
  3. Master cylinder
     - a. Body
       - (1) Reservoir
       - (2) Cylinder

b. Piston
(1) Primary cup
(2) Secondary cup
c. Piston return spring
d. Head nut
e. Check-valve assembly
f. Push rod
g. End boot
4. Dual Master Cylinder
B. Wheel Brake Mechanism
1. Wheel cylinder
a. Cylinder body
b. Pistons
(1) Piston cup
(2) Piston spring
c. Boots
d. Activating spring
e. Bleeder valve
2. Brake-shoe assembly
a. Backing plate
b. Brake shoes
(1) Friction material
(2) Primary shoe
(3) Secondary shoe
c. Anchor pin
d. Hold-down spring
e. Brake-shoe return spring
f. Adjusting mechanism
C. Hydraulic Brake Lines
1. Special type
2. Steel pipe
3. Fittings
4. Flexible hose
a. Front wheel connection
b. Rear axle connection

VI. Hydraulic Brake Operation
A. Application
1. Brake pedal depressed
2. Master-cylinder piston moving forward
a. Compensating port covered
b. Hydraulic fluid trapped in system
(1) Fluid moving in system
(2) Fluid under pressure
3. Wheel cylinder pistons moved outward
a. Activating pin moved outward
b. Brake shoes forced against drums
c. Frictional contact
(1) Heat
(2) Dragging effect
d. Slows wheel rotation
B. Release
1. Release brake pedal
2. Master-cylinder piston returns
3. Brake-shoe return spring activated
4. Brake shoes pulled from drums
5. Wheel cylinder pistons forced inward
6. Liquid returning to master cylinder
a. Pressure dropping
b. Check valve closing
(1) Maintains some pressure in system
(2) Keeps fluid in
(3) Keeps air out

VII. Accessories
A. Hand Brake
1. Drive shaft
2. Rear wheel
B. Power Brakes
1. Purpose
2. Basic principles of operation
C. Self-Adjusting Mechanism
1. Purpose
2. Method of operation
D. Hill Holder
1. Purpose
2. Method of operation
E. Stoplight Switch
1. Mechanically operated
2. Hydraulically operated

Section 21: Purchasing Automotive Parts

I. Make of Automobile
A. Model
B. Year

II. Engine Type
A. Number of Cylinders
B. Cylinder Arrangement
C. Valve Arrangement
D. Cubic-Inch Piston Displacement
E. Horsepower Rating

III. Exact Part to Be Purchased
A. Location
B. Casting Number (if available)
C. Part Number (if available)
D. Design
1. Type
2. Size
3. Description

APPENDIX C

BATTERY TERMINOLOGY

Amperage	The rate of flow of electric current (movement of electrons) in a closed circuit measured in amperes
Battery	A unit (two or more cells connected together) that consumes chemical energy to produce electric energy when needed
Electrolyte	A solution of salts, bases, or acids in water in which the negative and positive plates are immersed
Grid	A framework made of an alloy of lead and antimony that holds an active material
Hydrometer	An instrument used to measure the specific gravity of a liquid
Lead-acid cell	A secondary cell that can be recharged
Negative plate	A grid filled with sponge lead (Pb)
Overcharging	Passing a direct current through a battery that has already been charged to maximum
Positive plate	A grid filled with lead peroxide (PbO_2)
Primary cell	A cell that cannot be recharged
Secondary cell	A cell that can be recharged
Separator	An insulating material made of wood, glass, or rubber that separates the positive and negative plates
Specific gravity	The weight of any volume of a liquid divided by the weight of an equal volume of water or the ratio of the density of a substance to the density of a standard
Sulfation	A process in which lead sulfate coats the plates of a lead-acid battery that has been allowed to remain partially charged
Sulphuric acid and water	The electrolyte of a lead-acid battery
Voltage	Electric pressure, electromotive force (emf) that causes current flow (movement of electrons) when the external circuit is closed

APPENDIX D

ASSIGNMENT SHEETS

Unit 17: Four-Cycle Engines

Explain briefly what takes place during the following strokes:

Intake: _____

_____

_____

_____

_____

Compression: _____

_____

_____

_____

_____

Power: _____

_____

_____

_____

_____

Exhaust: _____

_____

_____

_____

_____

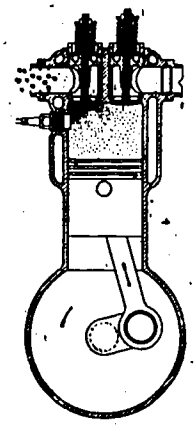

Intake

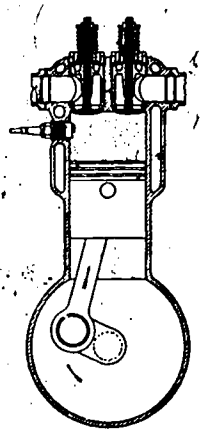

Compression

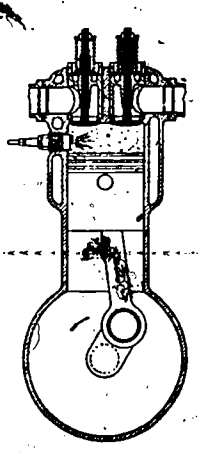

Power

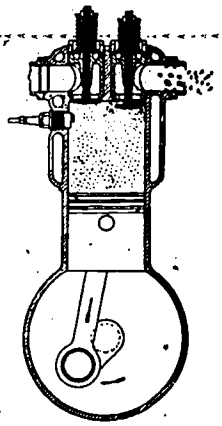

Exhaust

Unit 22: Storage Battery

1. What is the purpose of a storage battery? _____

2. What is the major difference between a storage battery and a cell? _____

3. What is meant by the capacity of a battery? _____

4. What determines the capacity of a battery? _____

5. What are the chemicals used in a conventional automobile battery?

   A. _____ B. _____ C. _____

6. What is a plate grid? _____

7. What is the composition of a plate grid? _____

8. What is meant by the overcharge of a battery? _____

9. What is a plate group? _____

10. The two types of plates used in a lead-acid cell are:

    A. _____ B. _____

11. How are the plates held apart? _____

12. What would happen if the plates touched? _____

13. Why are the separators made of wood, glass, or rubber? _____

14. What is the electrolyte of a storage battery? _____

15. Describe first aid procedures when an electrolyte is spilled on a person: _____

16. Explain what happens when the electrolyte is added to a dry-charged storage battery: _____

17. What is the maximum voltage of a storage battery cell? _____

18. What will occur when the two terminals of a battery are connected through an external circuit? _____

19. From which direction does internal current flow in a battery? _____

20. Describe what occurs when a continuous supply of current has been used from a battery: _____

21. Describe the chemical activity involved in recharging a battery: _____

_____

_____

22. How many cells are there in a 6-volt battery? _____ In a 12-volt battery? _____

How are the cells connected? _____

23. What two things determine the battery rating?

A. _____ B. _____

24. Of what material is the automobile battery case made? _____

25. What type of water should be added to a battery if the electrolyte becomes low? _____

_____

26. How is the specific gravity of the electrolyte in a battery determined? _____

_____

27. What is meant by a dry-charge battery? _____

_____

Unit 23: Magneto and Generator

1. What is a permanent magnet? _____

2. How is a magnet identified? _____

3. What makes up the external magnetic field between the two poles of a magnet? _____

4. In what direction do magnetic lines of force move? _____

5. What are two characteristics of lines of force?

   A. _____

   B. _____

6. What will happen when unlike poles of a magnet are brought together? _____

7. What is magnetic repulsion? _____

8. What is formed around a wire when current is flowing through it? _____

9. How can the magnetic lines of force around a wire be demonstrated? _____

10. State the left-hand rule: _____

11. What is an electromagnet? _____

12. Explain briefly what happens to the magnetic lines of force around two parallel wires that have electric current flowing through them: _____

13. What is the purpose of a magneto? _____

14. How is a magneto driven? _____

15. What is the purpose of a generator? _____

16. How is a generator driven? _____

17. Describe a simple magneto: _____

18. What is the meaning of a "load" in a generator circuit? _____

19. Explain the major difference between a simple direct-current generator and an alternator: _____

20. How is current generated in the windings of an armature? _____

21. What is the source of the current that flows through the field windings? _____

22. What effect does the current flow have on the field of an electromagnet? _____

23. What kind of current is produced in the armature of a direct-current generator? _____

24. How is the generator made to produce more current when its load is increased? _____

25. The three basic parts of a generator are: _____, _____

26. What are slip rings? _____

27. What is a commutator? _____

28. What is the function of brushes in a generator? _____

29. Where are the generator brushes located? _____

30. Why must the output of the generator be controlled? _____

31. What two devices must be used in controlling the output of the generator?

A. _____ B. _____

Unit 23: Rectification and Regulation

1. What is rectification of current? _____

2. Describe a silicon diode rectifier: _____

3. What is half-wave rectification? _____

4. What is full-wave rectification? _____

5. Describe pulsating current: _____

6. What is another name for a cutout relay? _____

7. What device made it possible to adapt alternators for use in automobiles? _____

8. Where is the cutout relay located in the electrical system? _____

9. What are two functions of the cutout relay?

   A. _____

   B. _____

10. Describe a cutout relay: _____

11. When the direct-current generator is in operation, what allows current to flow to the storage battery? _____

12. When the alternator is not operating, what prevents current from flowing from the battery through the generator? _____

13. What causes the contact points of the regulators to close? _____

14. What causes the contact points of the regulators to open? _____

15. Give two results that will cause damage if the generator output is not regulated:

    A. _____

    B. _____

16. What is the purpose of the voltage regulator? _____

17. Does the generator always charge the battery at the same rate? _____

Explain: _____

18. To which generator circuit is the voltage regulator connected? _____

19. As the battery approaches a charged condition, what happens to the voltage applied to the field coils? _____

20. What is the effect on the magnetic field around the armature as the voltage applied to the field coil changes? _____

21. What happens when a predetermined voltage is reached at the output terminals of a generator circuit? _____

22. Describe what happens in the voltage regulator when the output voltage of the generator drops below a predetermined voltage: _____

23. Why is a voltage regulator referred to as a vibrating voltage regulator? _____

24. Are current regulators similar to voltage regulators? _____ What is the basic difference? _____

25. Why is a current regulator described as a vibrating current regulator? _____

26. Where are the diodes installed in an automobile alternator? _____

27. Is a cutout relay needed in a transistorized regulator system? _____

Unit 24: Electricity/Electronics

1. What is the nucleus of an atom? _____
2. A proton in the nucleus of an atom has a _____ charge, and the electron outside the nucleus has a _____ charge.
3. When free electrons collect in one place, a _____ is formed.
4. When these free electrons move from one place to another, it is called _____
5. What two devices in the automotive electric system provide emf?
   A. _____ B. _____
6. What terminals are found on an automobile battery or alternator? _____
7. What substances allow electrons to move freely? _____
8. How is the negative (-) terminal determined? _____
   _____ Positive (+) terminal? _____
9. Why is copper wire a good conductor? _____
10. Why is rubber a good insulator? _____
11. What normally covers a conductor? _____
12. Define voltage: _____
13. If the voltage is increased, what will be the results on the electron movement? _____
14. How is voltage measured? _____
15. What is amperage? _____
16. How is amperage measured? _____
17. What is meant by resistance? _____
18. Why is there more resistance in a small wire than in a large wire? _____
19. Why is the resistance less in a short wire than in a long wire? _____
20. How is resistance measured? _____
21. State Ohm's law (in words): _____

22. What is the basic formula for Ohm's law? _____

23. In the formula, what instruments are used to measure each of the following? _____

E = _____, I = _____, R = _____

24. Using Ohm's law, how much voltage is required to force 8 amperes of current through a resistance of 4 ohms? _____

25. Describe a series circuit: _____

26. Describe a parallel circuit: _____

27. What is the advantage of a parallel circuit when a number of units are involved? _____

28. How are switches wired into a circuit? _____

29. What happens to the voltage as it travels through a circuit? _____

ACKNOWLEDGMENTS

The Bureau of Elementary and Secondary Education gratefully acknowledges the assistance of the Central California Automotive Technical Committee in the preparation of *Industrial Arts Power Mechanics.* It was this committee that authored *Industrial Arts Automotive Mechanics,* published by the California State Department of Education in 1964. The Bureau also gratefully acknowledges the assistance of the Statewide Industrial Arts-Science Study Committee, which appraised a set of proposed power mechanics activities involving the application of scientific principles; and the National Power Mechanics Review Committee, which evaluated the experimental edition of *Industrial Arts Power Mechanics.* The teachers, supervisors, or teacher educators who served as members of one or more of these committees are as follows:

California Committee Members

Richard S. Acuna, James A. Garfield High School, Los Angeles; Leslie L. Aldrich, Fresno State College; Cornel Amnasan, California High School, Whittier; Glenn F. Amsberry, San Ramon Valley High School, Danville; Howard Chester Anderson, Orange Coast College, Costa Mesa; Linley A. Anderson, Sylmar High School; Norman Avedian, Clovis High School; Fred A. Baer, Los Angeles Unified School District; William F. Bain, McLane High School, Fresno; Stan C. Barrett, Taft High School; Robert C. Beltzner, Rancho Cotate High School, Petaluma; William H. Bernard, Robert A. Millikan High School, Long Beach; Thomas W. Birch, Luther Burbank High School, Sacramento; Dean A. Bishop, Culver City High School; Ralph C. Bohn, San Jose State College; Clifford J. Boyd, Coronado High School; Gaylord B. Boyer, Modesto City Elementary and High School districts; Joseph J. Bradbury, James Lick High School, San Jose; Orval Breckheimer, Leuzinger High School, Lawndale; Benjamin D. Briscoe, Chatsworth High School; W. Harvey Bronsert, Washington High School, Fresno; B. Wesley Brown, Chico State College; John I. Brown III, Sweetwater High School, National City; Buster L. Burris, San Bernardino High School; Burl J. Bushman, Hueneme High School, Oxnard.

Laurence A. Card, Inglewood High School; Eugene A. Carlson, Wheatland High School; Carl W. Cavallo, Cordova High School, Rancho Cordova; John L. Cesareo, Western High School, Anaheim; Jesse Z. Chandler, Live Oak High School; Wallace M. Chaney, Sr., Ravenswood High School, East Palo Alto; Eugene A. Clarke, Pleasant Valley High School, Chico; Donald L. Cleland, El Capitan High School, Lakeside; Charles M. Coffman, Fresno City College; Robert A. Compton, James Logan High School, Union City; John M. Conway, Benicia High School; Dell O. Cooper, Terra Nova High School, Pacifica; Lloyd G. Corliss, Santa Barbara High School; Albert L. Cox, Helix High School, La Mesa; Walter D. Cox, Pacific Union College, Angwin; Eugene P. Crawford, Glendale High School; James A. Cresta, El Camino High School, South San Francisco; Lionel E. Cross, San Jose Unified School District; Robert A. Curtis, Bishop High School; Willie W. Dancer, Rancho Alamitos High School, Garden Grove; David G. Danish, Ravenswood High School, East Palo Alto; Glenn E. Dargatz, Jordan High School, Long Beach; Henry E. Davis, Analy High School, Sebastopol; John C. Davis (retired), Fresno City Unified School District; C. Thomas Dean, California State College at Long Beach.

Renso Del Carlo, La Sierra High School, Carmichael; Jack D. Diss, McFarland High School; Dale L. Dougherty, La Puente High School; Bruce R. Dunham, Dos Pueblos High School, Goleta; Eddie Nelson Dupee, Anderson High School; Russell J. Duval, San Luis Obispo High School; William W. Dyer, Oakdale High School; D. Dale Easter, Office of the Kern County Superintendent of Schools, Bakersfield; John D. Ehrenborg, Monte Vista Elementary School, Santa Barbara; Ralph B. Erb, Atascadero High School; Robert A. Escobar, Modesto High School; Larry E. Fanucchi, South High School, Bakersfield; Raymond E. Fausel, California State College at Los Angeles; Robert E. Finn, Richmond High School; George M. Fowler, California High School, Whittier; Milton J. Freitas, Fortuna High School; Herbert H. Gadbury, Rosamond High School; David M. Gallegos, Oceana High School, Pacifica; Keith E. Gittins, Foothill High School, North Highlands; Richard J. Glaff, William N. Neff High School, La Mirada; Lester M. Gosa, Thomas Downey High School, Modesto; Ruben C. Granados, Edison High School, Fresno; Edward J. Guffin, Point Loma High School, San Diego; Harley T. Haas, Narbonne High School, Los Angeles; Lee W. Haeberlein, Sierra Vista High School, Baldwin Park.

Jacob M. Hamann, Atascadero High School; Robert P. Hansler (retired), Fresno City Unified School District; John D. Herrell, Monache High School, Porterville; Marvin E. Hess, Pomona High School; Donald F. Hills, Gridley High School; Ivan D. Hinerman, Yucaipa High School; Jack R. Hodgman, Alhambra High School, Martinez; Walter E. Hoover, Bell Gardens High School; Paul W. Howard, Thomas Downey High School, Modesto; Fred P. Howe, Cordova High School, Rancho Cordova; J.

Brady Howell (retired), Santa Barbara City Elementary and High School districts; Douglas Hudiburg, Dos Palos High School; Robert J. Hughes, Albany High School; Frank J. Irgang, San Diego State College; Donald E. Jeisy, San Clemente High School; Delton Lee Johnson, E.O. Green School, Oxnard; Thomas Arnold Johnson, Santa Monica High School; Frank H. Jolly, Humboldt State College, Arcata; Mark Jones, Tustin High School District; John Z. Kell, Miramonte High School, Orinda; Stanley Kemper, Willow Glen High School, San Jose; James Kenley, Reedley College; Frank O. Kennedy, Tulare High School; David R. Kernberger, Napa High School; Billy H. Knoles, Apple Valley High School.

Donald S. Kyle, University High School, Los Angeles; James H. Laflin, Fontana High School; George C. Langley, San Jose Regional Vocational Center; William B. LaPorte, Whittier High School District; George B. Law, Jr., Sierra High School, Whittier; Alfred L. Leak, Fresno High School; Stephen V. Ledbetter, Marconi Technical Center, Sacramento; Peter A. Lefevre, Sunset High School, Hayward; Val T. Lepovitz, Mar Vista High School, Imperial Beach; Richard H. Levy, DeAnza High School, Richmond; Thomas Dan Love, Ramona High School, Riverside; Sterling C. Lowe, Encina High School, Sacramento; James H. Luckinbill, Nevada Union High School, Grass Valley; Angus J. MacDonald, San Jose State College; Richard S. MacPherson, John W. North High School, Riverside; Ernest P. MacRostie, Grossmont High School; Robert W. Magginetti, Capuchino High School, San Bruno; Stanley Mamulski, Polytechnic High School, Riverside; Harold L. Marsters, San Diego State College; Charles H. May, John Swett High School, Crockett; Ted A. McCoy, Hanford High School; Harry J. McDevitt, Oceana High School, Pacifica; Paul D. McLaren, Lower Lake High School; Ben H. McLeod, Brea-Olinda High School, Brea; J. M. McRobbie, California State Polytechnic College, San Luis Obispo.

Robert L. Meeks, Arcata High School; Robert D. Meran, formerly at Chico State College; James N. Milligan, Rio Linda High School; James Milum, Western High School, Anaheim; Oro D. Mitchell, Palo Alto High School; Lynne C. Monroe, University of California, Los Angeles; Prince Ell Moore, Gladstone High School, Azusa; A. D. Morehead, Selma High School; Robert E. Mullaney, San Marcos High School, Santa Barbara; Larry M. Munz, Cope Junior High School, Redlands; James E. Musick, formerly at Fresno State College; William Naman, Bullard High School, Fresno; Carl L. Nelson, Las Plumas High School, Oroville; Nicholas J. Neuburger, Chico State College; James L. Nolt, Turlock High School; Albert I. Odsen, La Serna High School, Whittier; Vern L. Osborne, Montgomery High School, Santa Rosa; Roy Louis Osella, Roseville High School; John I. Owens, Santana High School, Santee; Orville Page, Reedley College; William G. Palmtag, Analy High School, Sebastopol; Waldron H. Parker, Sonoma Valley High School; John E. Pierson, Vacaville High School; Thomas J. Powers, Fremont High School, Sunnyvale; Craig K. Preisendorf, Washington High School, Fremont.

Kenneth Proctor, Wasco High School; Robert B. Rankin, Redwood High School, Visalia; Albert L. Ratliff, Office of the Monterey County Superintendent of Schools; Ernest J. Rawson, California State College at Long Beach; Barratt W. Ray, McCloud High School; Fred Reddin, Arvin High School; Jack E. Reynolds, Sacramento City Unified School District; Earl S. Rice, Live Oak High School, Morgan Hill; James E. Rice, California State Polytechnic College, San Luis Obispo; Steven J. Richardson, Shafter High School; Larry W. Roberts, Enterprise High School, Redding; Dwight E. Robertson, North High School, Bakersfield; Earl A. Robertson, De Anza High School, Richmond; Adolphus G. Rogers, Centennial High School, Compton; John E. Rude, Lemoore High School; Ivan W. Ruhga, Patterson High School; John C. Ruppert, Ganesha High School, Pomona; William M. Savage, Mt. Whitney High School, Visalia; Frederick T. Schalesky, Rio Linda High School; Arden E. Schifer, Hamilton High School, Los Angeles; E. Blaine Schoolcraft, Santa Fe High School, Santa Fe Springs; James H. Sells, Summerville High School, Tuolumne; George E. Shelden, Sr., El Cerrito High School, Richmond; Floyd R. Sheppard, Alhambra High School, Martinez; Howard D. Simpson, Calexico High School.

Albert J. Sindlinger, College of the Sequoias, Visalia; James L. Smartt, Cubberley High School, Palo Alto; Sampson J. Smith, Jr., Ventura High School; Delbert L. Solomon, Atascadero High School; Sigurd M. Sonnevil, Modoc High School, Alturas; Richard R. Sonnie, Los Angeles High School; Norman R. Stanger, Office of the Orange County Superintendent of Schools, Santa Ana; Vernon R. Starr, Hanford High School; John H. Stead, Ventura Unified School District; Robert (Jack) Stinson, Monterey Peninsula Unified School District; Lester J. Swartz, San Juan Unified School District, Carmichael; Ernest M. Swenson, Sunset High School, Hayward; David O. Taxis, Office of Los Angeles County Superintendent of Schools; James I. Taylor, Hemet High School; James T. Taylor, Pacific High School, San Bernardino; Robert R. Telmos, Monte Vista High School, Whittier; Delbert C. Towell, Eagle Mountain High School; George F. Trasky, Paramount High School; Roy Tuttle, Delano High School; John L. Van Zant, Office of the Ventura County Superintendent of Schools; Robert J. Vargo, San Clemente High School; William Lee Vassar, Hiram W. Johnson High School, Sacramento; David F. Viera, Pittsburg High School, South Campus; Robert T. Vogel, Placer High School, Auburn; Dale G. Wagner, Merced High School.

James A. Walker, Clovis High School; Wayne E. Wallace, Wasco High School; John B. Walsh, Sequoia High School, Redwood City; Glenn D. Warrick, Long Beach Unified School District; Jay L. Webster, California State College at Long Beach; James L. Wellington, Lincoln High School, San Jose; Barton W. Welsh, Cerritos College, Norwalk; Norman D. Willems, Dinuba High School; Robert Willhoite, Coalinga High School; Clifford R. Williams, Willits High School; J. Howard Williams, Leuzinger High School, Lawndale; Frank T. Wilson, West Covina High School; Richard S. Winslow, Fairfield High School; Jack S. Yamabe, David Starr Jordan High School, Los Angeles.

Committee Members from Other States and Countries

Robert C. Anderson, Warwick Veterans Memorial High School, Rhode Island; Herbert Y. Bell, Washington State Department of Education, Olympia; Richard D. Berg, Wheaton Community High Schools, Illinois; T. Gardner Boyd, Kansas City School District, Missouri; Carl G. Bruner, Wichita City School District, Kansas; Carl W. Butler, Maine State Department of Education, Augusta; William Cady, Homewood-Flossmoor High School, Flossmoor, Illinois; Richard P. Callan, New Jersey State Department of Education, Trenton; Lee D. Carter, Idaho State Department of Education, Boise; Harlan Clouse, South High School, Pueblo, Colorado; Herman G. Collins, Northwest Missouri State College, Maryville, Missouri; Marvin A. Curtis, Highlands Junior High School, White Plains, New York; Howard B. Davenport, Pulaski High School, Milwaukee, Wisconsin; Ronald B. Disch, Bay View High School, Milwaukee, Wisconsin; Patrick R. Doherty, Jr., New Jersey State Department of Education, Trenton; Jack T. Duvall, Detroit City School District, Michigan; William R. Eister, Virginia State Department of Education, Richmond; Wade O. Fredrickson, New Mexico State Department of Education, Santa Fe; Nathan L. Friedman, New York City School District, Brooklyn; Leo B. Gardner, Mesa High School, Arizona; John J. Geil, Florida State Department of Education, Tallahassee; Ted Gould, Oregon State Department of Education, Salem; James L. Heller, Delaware State Department of Education, Dover; Thomas W. Hodgson, Seattle City School District, Washington; Marshall Hurst, Office of the Dade County Superintendent of Schools, Miami, Florida.

Joseph P. Indresano, U. S. Dependents Schools – European Area, APO New York – Germany; George C. Jackson, City School District No. 1, West Allis, Wisconsin; Richard V. Johnson, Waukesha High School, South Campus, Wisconsin; Willey P. Klingensmith (retired), Chicago City School District, Illinois; Harry Krane, New York City School District, Brooklyn; Deno G. Lepas, Central High School, Cheyenne, Wyoming; John Lucas, Ridgewood High School, New Jersey; Myles Marcovitch, Elizabeth D. Gillespie Junior High School, Philadelphia, Pennyslvania; W. A. Mayfield, Texas State Department of Education, Austin; Thomas C. McConnell, Dobyns-Bennett High School, Kingsport, Tennessee; Leo Millea, Jr., Lunenburg Junior-Senior High School, Massachusetts; Joseph Murri, John Bartram High School, Philadelphia, Pennsylvania; Edward H. Paloncy, Gary City School District, Indiana; Anthony J. Palumbo, Bowling Green State University, Ohio; Forest L. Penny, Kansas State College, Pittsburg, Kansas; Joseph A. Prioli, Brockton High School, Massachusetts; Kenneth L. Schank, Unified School District No. 1, Racine, Wisconsin; Dmitri Slobodian, Garden City High School, Michigan; Kendell C. Smith, Dimond High School, Anchorage, Alaska; Bragg Stockton, Dallas City School District, Texas; Thomas J. Straka, Kent City School District, Washington; Charles J. Teryek, Montclair State College, Upper Montclair, New Jersey; William A. Whitehouse, Board of Education, Toronto, Ontario, Canada.

In 8-115 (1717 & 1535) 78957 & 80202-300 8-70 10M