DOCUMENT RESUME

ED 128 654 CE 008 129

TITLE Assessing Vocational Education Research and Development.

INSTITUTION National Academy of Sciences - National Research Council, Washington, D.C. Assembly of Behavioral and Social Sciences.

PUB DATE 76

NOTE 138p.

AVAILABLE FROM Printing and Publishing Office, National Academy of Sciences, 2101 Constitution Avenue, Washington, D. C. 20418 ($8.00)

EDRS PRICE MF-$0.83 HC-$7.35 Plus Postage.

DESCRIPTORS *Educational Assessment; Educational Development; Educational Legislation; Educational Policy; *Educational Research; *Federal Legislation; Federal Programs; Federal State Relationship; Information Dissemination; Program Administration; *Program Evaluation; Research Coordinating Units; Research Reviews (Publications); *Vocational Education

ABSTRACT

Major conclusions of this report prepared by the Committee on Vocational Education Research and Development are that the $250 million spent by the U. S. Office of Education (USOE) on vocational education research and development during the last 10 years has not had documented, widespread impact because of lack of coherent policy, administration, and leadership. Chapter 1 gives an overview of the report by the committee (formed in 1974), whose two major tasks were to review and assess the research and development activities sponsored by USOE under the Vocational Education Act of 1963 as amended in 1968, and to recommend changes. Chapter 2 presents a brief discussion of vocational education in this country: how it differs from general education, how it has changed over the years, and what issues it faces today. Chapter 3 summarizes the history of vocational education research and development (R&D) legislation and funding. Chapter 4 gives the results of the committee's assessment of vocational education R&D programs which were obtained by reviewing large-scale evaluations, by searching for examples of successful projects, and by interviewing people involved in the R&D program. Chapter 5 presents the committee's description and assessment of the administration of vocational education R&D program and their recommendations for changes in the program's structure and management that are intended to result in an integrated R&D system. Details on procedures and findings are appended. (HD)

Assessing Vocational Education Research and Development

COMMITTEE ON VOCATIONAL EDUCATION
RESEARCH AND DEVELOPMENT
Assembly of Behavioral and Social Sciences
National Research Council

NATIONAL ACADEMY OF SCIENCES
Washington, D.C. 1976

CE 008 129

NOTICE: The project that is the subject of this report was approved by the Governing Board of the National Research Council, whose members are drawn from the Councils of the National Academy of Sciences, the National Academy of Engineering, and the Institute of Medicine. The members of the Committee responsible for the report were chosen for their special competences and with regard for appropriate balance.

This report has been reviewed by a group other than the authors according to procedures approved by a Report Review Committee consisting of members of the National Academy of Sciences, the National Academy of Engineering, and the Institute of Medicine.

International Standard Book Number 0-309-02526-5

Library of Congress Catalog Card Number 76-461-96

Available from

Printing and Publishing Office
National Academy of Sciences
2101 Constitution Avenue
Washington, D.C. 20418

Printed in the United States of America

80 79 78 77 76 10 9 8 7 6 5 4 3 2 1

COMMITTEE ON VOCATIONAL EDUCATION RESEARCH AND DEVELOPMENT

RUPERT N. EVANS *(Chairman)*, Professor of Vocational and Technical Education, University of Illinois

CLAUDE BROWN, Director of Research and Education, Teamsters Local Union No. 688, St. Louis, Missouri

GLORIA S. COOPER, (formerly Director, Research Coordinating Unit, New Hampshire State Department of Education), Project Director, The Ohio State University, The Center for Vocational Education

JOHN R. GUEMPLE, Assistant Deputy Commissioner for Administrative Services, Texas Education Agency

MARY ALLEN JOLLEY, Director of Public Affairs, American Home Economics Association, Washington, D.C.

JOHN D. KRUMBOLTZ, Professor of Education and Psychology, School of Education, Stanford University

DUANE R. LUND, Superintendent of Schools, Staples, Minnesota

PAMELA A. ROBY, Director, The Extended University and Chairperson of Community Studies, University of California, Santa Cruz, California

DAVID STERN, Institution for Social and Policy Studies, Yale University

GORDON I. SWANSON, Professor, Vocational Education, University of Minnesota

ROBERT E. TAYLOR, Director, The Center for Vocational Education, The Ohio State University

Preface

Almost all public policy decisions—in fact, almost all decisions—must be made on the basis of incomplete information. In the past decade, federal policy makers working in education who have tried to base decisions on program evaluations have been hindered by the insufficient quality and quantity of information. Since many of the programs being evaluated are planned and carried out by local school districts with only minimal supervision by state and federal officials, the evaluator needs, but seldom can secure, data from almost every school district in the nation. The evaluation of vocational education research and development (R&D) has similar problems. Vocational education R&D is conducted in literally hundreds of different places: in all states, in many large school districts, and at most major universities. Its evaluation is further complicated by the need to assess the utility of each of the R&D products in a setting appropriate for its intended use. Complete data to allow such an evaluation are not and probably never will be available. The Committee on Vocational Education Research and Development was concerned with these problems of evaluation as it sought to recommend changes for the future.

The Committee was formed in 1974 to perform two major tasks for the U.S. Office of Education: to review and assess the research and development activities sponsored by the Office of Education under the authority of the Vocational Education Act of 1963 as amended in 1968; and to recommend changes in R&D policies and programs for the coming decade. The Committee, which directed the writing of this report, was com-

posed of professionals from diverse parts of the vocational education community—universities, R&D institutions, national organizations, and state and local education agencies—as well as behavioral and social scientists and a labor union official.

Although we were asked to study only the R&D component of vocational education, we would have liked to review vocational education as a whole. How, after all, can one evaluate applied R&D in terms of improving programs without considering the goals of the programs it is designed to serve? The objectives of some programs are clearly defined, but their appropriateness has not been thoroughly investigated: some programs emphasize meeting the needs of employers, while others stress the sometimes antagonistic goal of increasing students' employment options. Most programs are designed to increase student adaptability to the existing world of work, but an increasing number attempt to provide students with skills and attitudes that can change the work place. After much soul-searching and after rereading our terms of reference, we decided to call for research on program objectives and for the convening of a panel of consultants similar to the panels that brought about major changes in vocational education in 1963 and 1968. Research on objectives should include the development of clear definitions, an examination of the suitability of objectives, and suggestions as to how to evaluate the success of programs in meeting their stated objectives.

The Committee and its staff gathered information from a wide variety of sources: we read many reports and talked to people involved in vocational education and its R&D, other education, business, and labor. This widespread search yielded disappointing results: many people believe that vocational education R&D has been beneficial, but there have been few efforts to measure its impact objectively. Although we had difficulty arriving at conclusions regarding the impact of R&D, it was relatively easy for us to reach conclusions about the administration of the R&D program. The need for important changes in the management and structure of the program was agreed upon unanimously and we were able to recommend strategies for change. However, we were not able to recommend a solution for every important problem.

The Committee wanted to include in this report a recommendation on the coordination of various federal R&D programs of relevance to vocational education, but we were unable to find a satisfactory solution to the widespread problem of lack of coordination. We believe that the work of three particular programs should be coordinated: the vocational education R&D program in the Bureau of Occupational and Adult Education of the U.S. Office of Education, the education and work program at the National Institute of Education, and the manpower R&D program in the

Department of Labor. The Committee on the Department of Labor Manpower R&D of the National Research Council recommended the formation of a National Center for Manpower Study, and a similar suggestion for a National Institute of Vocational Education has been proposed to Congress. Neither of these suggestions proposes the necessary linkages with the substantial R&D programs on technical education being conducted by the armed forces, the Agency for International Development, the Department of Agriculture, and many other public and private agencies. Although the Committee agreed that the directors of relevant R&D programs should share findings and products to minimize unnecessary duplication of effort, we were not able to agree on a mechanism for accomplishing the needed coordination in planning.

Perhaps the Committee's greatest difficulties came in assigning relative priorities to different research topics. So much needs to be done. Only the area of counseling and guidance has received sustained support for the past ten years, and even in this area all agree on the vast amount of work still to be accomplished. It is inevitable that a group as diverse as this Committee will not agree on every point. Most of our disagreements, however, were on matters of emphasis. For example, some Committee members, emphasizing the enormous gaps that remain in the education of minorities and women, would have recommended extensive additional work; others, emphasizing the progress that has been made, would have stressed the need to work on other topics. While we agreed to disagree on research priorities, we had no difficulty at all in decrying the past practice of emphasizing an area of research for a year and then ignoring it for two or three years.

Despite our differences, we have agreed that this report can lead to improvement in vocational education R&D—an important means to the end of offering improved vocational education services to individuals and society.

RUPERT N. EVANS, *Chairman*
Committee on Vocational Education Research and Development

Acknowledgments

The Committee wishes to acknowledge the valuable assistance of the staff provided by the National Academy of Sciences; without their help, the report could not have been completed. In the early months of the project, Mónica K. Sinding, Associate Executive Secretary, performed the critical tasks of organizing the Committee's work and beginning to gather information. Unfortunately, she left midway in the project, but two able social scientists, Susan W. Sherman, Research Associate, and Deborah R. Maloff, Research Assistant, quickly acquired a working knowledge of vocational education and of the work done previously by the Committee. They both made major contributions to the data analysis and to the writing; Dr. Sherman was also responsible for planning and structuring this report. Barbara L. Arenson handled the administrative details of the project accurately and efficiently. Melvin L. Barlow, consultant to the Committee and staff, served as a valuable resource, drawing on his extensive professional experience as a vocational educator and historian. Throughout the course of the project, Sherman Ross served as Executive Secretary.

David A. Goslin, Executive Director, and Lester P. Silverman, Associate Executive Director of the Assembly of Behavioral and Social Sciences, helped to guide and motivate the Committee and staff, especially when they faced difficulties in writing the report. This report has benefited from the work of the Assembly editors, Eugenia Grohman and Christine Lintz McShane. Ms. Grohman worked closely with the Committee and staff to revise the report at critical points in its development.

The Committee wishes to thank the staff at the U.S. Office of Education who provided much information essential to this report. Finally, we acknowledge the contributions of the many people interviewed during the project and those who wrote papers for us. The names of these people are listed in Appendix B.

Contents

1 Highlights 1

2 The Changing Focus of Vocational Education 7

3 Legislation and Funding 16

4 Assessment of Vocational Education R&D 28

5 Administration of the Vocational Education R&D Program 44

APPENDIXES

A Review of R&D in Major Priority Areas 83
B Sources of Information 112
C Priority Area and Project Type Section 4(c), Parts C, D, and I 118

References 125

1 Highlights

The Committee has found that the $250 million spent by the U.S. Office of Education on vocational education research and development during the last ten years has not had documented, widespread impact. Although the Committee did not have adequate data and models for a rigorous evaluation, the available data do not indicate that vocational education research and development (R&D) findings and products have had an influence on the knowledge, skills, or employability of large numbers of students. The Committee believes that vocational education R&D shares with educational R&D a lack of both demonstrated impact on students and methods for rigorously measuring impact.

There are several major reasons for the limited impact of vocational education R&D:

- Priorities for R&D have been based more on political and bureaucratic considerations than on the results of previous research. Further, priorities have changed frequently so that research on any given issue has not been continued long enough to yield results. There has been virtually no R&D on some important problems while research on other problems has been continued beyond the point of fruitful work.
- Geographic restrictions on the distribution of R&D funds have resulted in the failure of the R&D program to adequately address problems of national or multistate scope and, sometimes, to fund the most qualified researchers.

- There has been a lack of coordination of the separately administered parts of the federal R&D program.
- Systematic and effective strategies have not been implemented for disseminating and encouraging utilization of R&D products and results.
- There has been no systematic effort to maximize the impact of the vocational education R&D program, and the few attempts to measure impact have met with only limited success. The Committee believes that any program of applied R&D should emphasize maximizing and measuring impact.
- Most of the early expenditures were not used to produce usable R&D products but rather principally to develop R&D institutions and to train R&D personnel. This occurred because there were few trained researchers in vocational education and few social scientists knowledgeable about vocational education when substantial R&D funding began in 1965.

The Committee has concluded that these deficiencies stem from a lack of coherent policy, administration, and leadership in the vocational education R&D program.

The Committee believes that improvement in vocational education R&D requires, first and foremost, stable policy, leadership, and priorities. In this report, the Committee recommends specific ways to build a well-integrated system of vocational education R&D in order to improve the quality and impact of vocational education. The recommended plan for evaluation and changes in the management and structure of the R&D program are necessary if vocational education is to be continually improved by its R&D.

THE CHANGING FOCUS OF VOCATIONAL EDUCATION

Since 1917 the primary objective of vocational education has been to prepare students for jobs in order to meet the labor market needs of the American economy. Beginning in the 1960s, vocational education became increasingly concerned with meeting the needs of its students and of society. For example, vocational education now makes a special effort to serve economically and socially disadvantaged students and to increase the flexibility of all vocational education students in choosing careers and changing occupations.

Chapter 2 presents a brief discussion of vocational education in this country: how it differs from general education, how it has changed over the years, and what issues it faces today. Although vocational education R&D has touched on some of these issues, it has rarely addressed broad philosophical questions or played a significant role in clarifying major

issues. Instead, R&D has most often been concerned with more localized problems, descriptive studies, curriculum development, and demonstrations. Research on some important and difficult issues, such as measuring the actual benefits of vocational education, is nearly nonexistent. A review of R&D on nine major topics related to vocational education is presented in Appendix A.

The Committee believes that the primary purpose of vocational education R&D is the continual updating and improvement of vocational education programs. Vocational education R&D has been and should be addressing questions and problems arising in the practice of vocational education. In addition to this supportive and passive role, however, the Committee believes vocational education R&D can and should contribute to the clarification of the purposes of vocational education and help the program adapt as society changes. Defining objectives, measuring the actual benefits of existing programs, and initiating exploration of new subjects in vocational education, rather than simply reacting to problems of existing programs, are important activities for the R&D program. Vocational education R&D should be applied R&D, as Congress suggests, but the term "applied" should be interpreted more broadly than in the past; vocational education research should include the development of research methods. (The history of vocational education R&D legislation and funding is summarized in Chapter 3.)

ASSESSMENT OF VOCATIONAL EDUCATION R&D

The Committee attempted to assess the vocational education R&D program by reviewing large-scale evaluations, by searching for examples of successful projects, especially those with objective measures of impact, and by interviewing people involved in the R&D program. The results of that assessment are found in Chapter 4.

The Committee's assessment was hampered because the objectives of vocational education R&D have not been clearly defined. The Committee also had difficulty finding evidence of impact, partly because there are insufficient data to allow for a comprehensive evaluation of vocational education R&D. Impact measures have often been subjective and difficult to validate and have failed to measure the long-term effects of R&D.

The Commissioner of Education should ensure that USOE develop a comprehensive plan for evaluation of vocational education R&D. The objectives of R&D should be identified in conjunction with an examination of vocational education and its actual benefits. Evaluation criteria should be developed and a sample of projects should be extensively evaluated. Longitudinal studies of vocational students and their employers

should be conducted, and those studies should include measures of students' job satisfaction, continuation of education, job mobility and wages, employers' satisfaction, and savings in training costs.

Because vocational education is relatively new and rapidly changing, the ongoing program of R&D should be supplemented by a panel of consultants appointed by the President and charged with studying all vocational education, including its R&D. This panel should be convened every five years to study vocational education and its R&D.

ADMINISTRATION OF THE VOCATIONAL EDUCATION R&D PROGRAM

In Chapter 5 the Committee presents its description and assessment of the administration of the vocational education R&D program. The Committee recommends many changes in the program's structure and management that are intended to result in an integrated R&D system. These changes are designed to meet several goals:

(1) to facilitate communication and coordination among parts of the R&D program and to define the roles and interrelationships among institutions involved in the program;

(2) to ensure that long-term problems, especially those of national and multistate scope, are studied;

(3) to ensure that the needs of groups such as minorities, women, the disadvantaged, the handicapped, and those who do not speak English as their first language are addressed;

(4) to minimize political and bureaucratic influences on R&D priorities and distribution of funds;

(5) to increase the coverage, quality, and utility of the information collection and retrieval system; and

(6) to increase the extent and quality of dissemination and utilization of R&D results.

These six goals are not ends in themselves, but are means that, in the Committee's judgment, will lead to improved vocational education R&D and service to students. The Committee's major recommendations on the administration of the R&D program are summarized here.

Consolidation of Parts of the Vocational Education R&D *Program* Congress should consolidate research, development, and demonstration (Parts C, D, and I of the 1968 Vocational Education Amendments) in new legislation and in the structure of the U.S. Office of Education. Research should receive at least 20 percent of the funds appropriated.

Commissioner's Share of Funds National or multistate problems should be addressed by the Commissioner's share of funds (50 percent) while states should continue to address state and local problems. The current geographic limitation on awards of the Commissioner's share should be removed.

Procedures for Setting Priorities The Commissioner of Education and state directors of vocational education should initiate a rigorous system of setting priorities, using continuing advisory groups and management information systems to determine long-range plans for R&D. More input from researchers should be considered in establishing priorities.

National Vocational Education R&D *Centers* The Congress and the Commissioner of Education should ensure the continued existence of at least one national vocational education R&D center, which should receive long-term support for addressing national and regional problems, including those identified by the center(s). The center(s) should coordinate their work with the research activity within the states and should assist in disseminating research products and training R&D personnel.

Information Collection and Retrieval The Department of Health, Education, and Welfare (HEW) should support a comprehensive and well-integrated information resource system linked to a dissemination network serving practitioners. A clearinghouse for vocational and technical education should include the abstracting and indexing functions of Abstracts of Instructional and Research Materials (AIM/ARM) and be well coordinated with other vocational education R&D activities. Every vocational education R&D project should be required to submit final reports to Educational Resources Information Center (ERIC) and AIM/ARM. Provision needs to be made for collecting and disseminating audio-visual materials.

Information Analysis The Commissioner of Education should establish an information analysis program to transform R&D information on critical problems into appropriate forms for diverse user groups. This program should provide interpretations useful to each of those groups of users. Effective dissemination techniques should be developed and implemented for these products.

Utilization A significant proportion of federal R&D funds should be designated for dissemination and utilization, under the direct responsibility of the Bureau of Occupational and Adult Education of USOE. In conjunc-

tion with the information resource system for vocational education, a comprehensive dissemination and utilization plan involving the national R&D center(s), research coordinating units, state and local education agencies, and other organizations should be developed. User training programs should be conducted to improve the flow of information from the resource system to practitioners.

2 The Changing Focus of Vocational Education

In a community college in Michigan, there are two lunch lines in the cafeteria: one serves the regular $0.75 lunch; the other, for $1.25, serves a gourmet meal prepared by students in the chef training program. In a high school in Illinois, handicapped and other vocational students operate a combination motel, restaurant, and gas station completely on their own. In another high school district, vocational students have built and sold 35 residential houses in the last 35 years, combining the efforts of students in drafting, interior decorating, sheet metal shop, and building trades. These are only three examples of scores of ways in which vocational educators are trying to meet their primary objective: preparing students for work.

Vocational education is unique in a number of ways. It treats students as practitioners, preparing them for skilled entry-level jobs not requiring a baccalaureate. It offers training in specialized skills such as nursing, auto mechanics, and irrigation technology, usually in high schools or in two-year post-secondary schools. It frequently uses instructional settings other than (and in addition to) the traditional classroom. Its success in terms of placing students in jobs is highly dependent upon the economy. In high schools it serves primarily students of lower socioeconomic status and less academic ability than the general student population.

This chapter sets vocational education in its social and historical context and presents the issues that have faced vocational educators and researchers. These issues are also discussed as they relate to present and future vocational education and its R&D.

BACKGROUND

The notion that schools should prepare students for work is relatively new. Schools began to introduce practical subjects, which were designed to "train the hand as well as the mind," toward the end of the nineteenth century, when most young people were taking advantage of free public elementary education, and an increasing number were continuing through high school. Manual training, domestic science (home economics), agriculture, and business courses attracted many students, and enrollment in these curricula grew rapidly. Around the turn of the century, however, some of the manual training educators and many agricultural, business, and industrial leaders became aware of the need to prepare people for more specific occupations. The idea of developing vocational education courses for high school students who wanted to prepare for work grew from this need.

Three pieces of legislation were critical in the development of vocational education: the Smith-Hughes Act of 1917 (P.L. 64-347), the Vocational Education Act of 1963 (P.L. 88-210), and the 1968 Amendments (P.L. 90-576) to the 1963 Act. The Smith-Hughes Act provided federal aid for vocational education offered by public secondary schools; this significantly increased the number of programs and students, from 160,000 students in 1918 to almost four million in 1960. Many of these students were adults who wanted better jobs. The Vocational Education Act of 1963 authorized increased funding for vocational education and also encouraged vocational education to shift to broader goals related to the development of human potential and long-term employment. Vocational education had been first offered in public schools in the United States during a period of thriving industrialism, when the needs of workers were considered to be secondary to the needs of the economy. At that time, vocational education accepted the short-term goals of meeting the rapidly changing demands of the labor market; it was less concerned with gradual trends in the labor market or with human needs. With the passage of the 1963 Act, the objectives of vocational education became much broader than they had been 60 years earlier. Because of the broadened focus and increased funding, enrollment in vocational education programs more than doubled in the next four years.

The 1968 Vocational Education Amendments continued the emphasis on serving the needs of students. An important objective of the Amendments was to provide better service to the disadvantaged, the handicapped, post-secondary, and adult students. The legislation also provided support for the career education movement by stressing career planning as well as employment preparation of students.

ISSUES IN VOCATIONAL EDUCATION

Vocational education of the 1970s differs markedly from the program initiated in 1917. In 1974, there were 13.5 million students in vocational education programs, including the disadvantaged, the handicapped, and those needing more advanced specialized training in post-secondary institutions. Vocational education programs are today more varied in content, employ more sophisticated instructional methods, and attempt to teach much more than occupational skills. Vocational counseling plays an increasingly important role in vocational education, so that students can be better equipped to make decisions regarding occupational choice.

The objectives of vocational education have been expanded since 1917. While a major objective is still to prepare people for work in order to meet the needs of the economy, a second objective, which emerged in the 1960s, is to increase the employment options available to each person. Vocational education has become concerned with developing flexible occupational and decision-making skills so that students may choose any of several occupations after graduation. A third, usually implicit, objective is motivating students to learn basic academic skills.

Researchers have done and continue to do investigative and developmental work to improve vocational education. (The Committee's review of R&D related to vocational education is presented in Appendix A.) Three particular lines of investigation have been pursued—characteristics of students, instruction of students, and the relation of vocational education to work. First, vocational education researchers have tried to identify the characteristics of students being served by the programs so that the needs of the students can be considered when designing programs. Vocational educators and researchers are sensitive to the need to serve all students, including women, minorities, the disadvantaged, and the handicapped. Second, vocational educators are concerned with the instruction received by students. Accordingly, research and development is carried out to make curricula flexible, to develop new programs in career education, and to compare the effectiveness of various modes of instruction. Third, vocational educators are concerned with the objectives of vocational education and the relationship between programs and the work place. Researchers use labor-market information to adapt programs to the demands of the economy. They study career development and guidance to increase the flexibility and decision-making skill of each student. They also evaluate vocational education to measure the extent to which those programs are meeting their stated objectives and to judge the appropriateness of the objectives.

CHARACTERISTICS OF VOCATIONAL EDUCATION STUDENTS

Tailoring Programs to the Needs of Students

In light of the expanded objectives of vocational education, practitioners now generally believe that the characteristics and needs of students should be understood before programs can be developed to best meet students' needs. Several studies have shown that, compared with other students, vocational education students usually come from families of lower socioeconomic status and have less academic, especially verbal, ability. Their parents usually have received less education. It is not known, however, why students of lower socioeconomic status, lower occupational aspirations, or less academic ability are in vocational education programs. Researchers have not determined to what extent students with these characteristics actively choose vocational programs over other programs and to what extent they are assigned by school administrators to vocational programs more often than other students. There seems to be a tacit assumption that these students are better prepared for work by vocational than general education since they learn skills for blue-collar jobs, which they are likely to hold because of their socioeconomic backgrounds. The implication that vocational education thus perpetuates social class distinctions has not been investigated.

It is also assumed that vocational students learn basic educational skills (the three Rs) better if they are enrolled in both vocational and general education courses because they are more interested in the context in which these skills are taught. Frequently, students who are ready to drop out of general high school programs are reportedly "turned on" by vocational programs and become enthusiastic students and productive workers. This assumption has not been questioned in a scientific manner.

Equal Access to Programs

Educators are now required to provide equal program opportunities to all students. Emphasis has been placed on minorities, the handicapped, the disadvantaged, adults, and more recently, women and those who do not speak English as their first language. Vocational education has been encouraged to eliminate sex stereotyping in programs and to provide equal access to programs associated with occupations that have been traditionally dominated by one sex. It is not clear to what extent this requirement is being met. There is some question as to how vocational education can best serve those students who have been socially and eco-

nomically disadvantaged. For example, how can vocational education take into account differences in the cultural values, especially those concerning work, of different ethnic groups and provide training to maximize students' chances of getting and holding jobs? Rarely do teachers receive special training to help them meet the unique needs of different groups of students. (Suggestions for further research on meeting the needs of minority group members and women are contained in articles by Hamilton [1975] and Roby [1976].)

INSTRUCTION OF VOCATIONAL EDUCATION STUDENTS

Flexibility in Curricula

The training needed by vocational education students has changed markedly over the years. With rapidly changing economic and technological developments in business and industry, new skills are required and old skills become obsolete. Although substantial efforts have been made in R&D to develop a means for keeping curricula up-to-date and responsive to the changing needs of students, this remains a major problem in vocational education. Institutional rigidity has sometimes resulted in the training of outmoded skills on obsolete equipment by teachers whose knowledge of industry is not current.

Further, it is becoming increasingly likely that people will change occupations at least once in their lifetimes, so that vocational education programs should teach multiple and generalizable skills that will prepare people better for mid-career changes. The objective of training students for occupational versatility has not been easy to meet. Vocational education R&D has not successfully solved the problem of training people for the specialized technical skills required by certain occupations and, simultaneously, preparing them for a broader range of job opportunities.

Career Education

Career education, a major R&D topic funded under the 1968 Amendments, has attempted to expand the boundaries of traditional vocational education. The essential concept of career education is that all students, not just vocational education students, should be exposed to career development opportunities throughout their school years and that every student should leave school with the skills necessary for job entry, whether that student completes the tenth grade or a four-year college course. Career education ideally exposes students to the full range of career opportunities, helps them decide their occupational futures, and provides

education and training appropriate to their career choices. Career education includes vocational education in that occupational training for specific skills is one of its essential elements, but it is also concerned with preparing all students to make career decisions and changes throughout their lives.

Despite the heavy investment of R&D funds in career education programs, research has neither established an empirical or theoretical basis for career education nor evaluated its effectiveness. It has not been determined at what point in a student's education knowledge about jobs and careers should be introduced, when specialized skills should be taught, or how career education can be individualized for students with differing needs and ambitions.

On-the-Job Training versus Classroom Training

Another critical issue in vocational education instruction has been the identification of the advantages of classroom instruction relative to those of on-the-job training (which can take place under the auspices of the employer or in conjunction with school-sponsored cooperative education). Some have argued that training at the work site is the most effective and relevant method of job instruction. In addition, if only a few students desire instruction in a given field, classroom training may not be feasible. On the other hand, classroom instruction has other advantages: job simulation minimizes penalties for error and allows students to learn at a flexible pace. The need to measure the advantages of on-the-job training relative to those of classroom training remains a challenge to vocational education R&D.

VOCATIONAL EDUCATION AND WORK

Objectives of Vocational Education

The primary objective of vocational education programs has been to prepare students for occupations, with a recent emphasis on equality of access to programs. Some other objectives, benefits, and purposes of vocational education have been identified but not fully studied. Vocational education programs usually serve the perceived needs of students and workers as well as those of employers. Success is usually measured by the proportion of graduates who get jobs. The costs and benefits of vocational education and the distribution of these costs and benefits to the public and private sectors have not been investigated. Similarly, the distribution of costs and benefits to employees and employers has not

been studied. For example, training aviation mechanics in public schools reduces training costs for the private airline companies. (In theory, the more the training is specifically tailored to actual job requirements, the greater the benefit to the employer.) To the extent that competition exists among employers, the saving in private training costs from vocational education programs may be passed on to the consumers. The extent to which public vocational schools augment private profits or cause lower prices has not been measured.

Vocational education can serve both public and private purposes. An example of a public purpose for vocational education would be helping people become responsible citizens by helping them to become responsible workers. Training for citizenship, of course, is one of the principal purposes of schools in general. Vocational schools may have a particularly important role to play because there is evidence that people are more inclined to participate responsibly in democratic government if they have the experience of responsible participation at work.

Democratic responsibility in the work place has been a major political issue in other industrial countries for years. In October 1975, the U.S. Congress established the National Center for Productivity and Quality of Working Life, to promote, among other things, inquiry into the possible benefits of increased participation by employees in decision making in the work place. In order to enhance their ability to participate responsibly at work, students in public vocational programs might be given opportunities to learn, for example, what a corporation is and what a producers' cooperative is, how collective bargaining works, what the stock market does, and how time-and-motion studies are performed. They might also be trained in the skills required to own and operate their own businesses. Researchers should seek ways in which vocational education can help students achieve the level of economic literacy necessary to exercise their full rights and responsibilities at work.

Job Placement

Because job training has been a major goal of vocational education, there have been many attempts to maximize the proportion of vocational education graduates placed in jobs. Two complementary strategies have been used—labor market forecasting and career guidance.

Labor market information is used by vocational educators to predict future demand for certain occupations and to adapt programs to meet the demands. Many states have developed and are using their own labor market management information systems, but present forecasting methods can be improved in at least three ways. First, labor market demand

forecasts should attempt to take into account the extent to which wages and working conditions will change if more or fewer workers are trained. Second, program planners and researchers should recognize that labor market information from various vocational education districts must be coordinated in some way because workers move from place to place. Third, since macroeconomic or institutionally oriented employment policy affects total demand for labor, it should be taken into account in labor market forecasts.

Career development and guidance strive to meet the needs of individual students while they are enrolled in programs and after graduation. The overall goal of career guidance is to improve the ability of students to make career decisions. Traditionally, guidance counselors waited until students came to them with career or job problems. Now some counselors are trying to anticipate and prevent problems by providing students with career information and decision-making skills that will reduce the frequency of decisions based on incomplete information or inappropriate choice strategies.

Educational personnel are increasingly concerned with providing students more information on available instructions and training programs. Students might find it helpful to learn about the experiences of graduates and dropouts from these institutions. At present, there is more information available to help institutions select individuals than to help individuals select institutions. The effects on students and institutions of the availability of this information is not known.

Evaluation of Vocational Education Programs

A necessary step in improving the connection between vocational education and work is evaluation, which measures the extent to which programs are meeting their stated objectives. Past evaluations of vocational education programs have rarely been adequate. The studies most often cited as model evaluations generally need improvement. Larger and better-designed samples, more appropriate experimental and questionnaire design, better measurement of criterion and background variables, and more suitable statistical techniques could strengthen future evaluations.

Further, some believe that current evaluations offer little assistance to the vocational education policy maker, curriculum developer, or teacher because the criterion measures inadequately reflect program success: evaluators have most often measured success in terms of initial job placement, which is determined by many factors, including the availability of jobs, the social status, personality, and intellect of the student, and chance. The existing criterion variables could be supplemented with new

measures of other aspects of program success, for example, job satisfaction, job turnover rates, the socioeconomic mix of students, and changes in student self-perceptions.

CONCLUSIONS

The issues facing vocational education also affect other behavioral and social sciences. In the past, vocational education researchers have been able to draw on the work of social and behavioral scientists in areas such as human learning and development. However, in some cases, vocational education R&D has proceeded without the benefit of established social and behavioral science theories or an extensive knowledge base. The Committee hopes the education and manpower work program of the National Institute of Education and the research program of the Department of Labor will provide support for the development of coherent theoretical perspectives leading to more useful applied research in vocational education.

In addition to the exchange of knowledge and theories on substantive issues, methodological advances made by other social science researchers can benefit vocational education researchers. However, existing R&D methods have sometimes been inadequate or inappropriate for use in vocational education. In order to meet the methodological needs of vocational education R&D, the USOE definition of applied research should be expanded to include the development of research tools.

In the past 60 years, vocational education has broadened its objectives in response to changes in American society. Enrollment in programs has expanded to include groups of students never before served by vocational education. Diverse needs of students have been addressed as societal pressures demanded. In the future, vocational educators and researchers may want to take a more active role, anticipating altered demands of the labor market and of society.

Most of the past research in vocational education cannot be generalized beyond the immediate situation that was studied. Questions with far-reaching implications have not been investigated; for example, alternative instructional settings have not been successfully compared, highly flexible and generalizable curricula have not been developed, and the objectives of vocational education have not been carefully examined. If research is to improve the education of vocational students, it must be more far-sighted, expanded in scope, and improved in quality.

3 Legislation and Funding

HISTORICAL BACKGROUND OF EDUCATIONAL RESEARCH

FEDERAL COMMITMENT TO EDUCATIONAL R&D

A national commitment to educational R&D began a half century before a commitment to vocational education R&D. The federal Department of Education, established in 1867, was charged with data gathering and dissemination of statistics that would "show the condition and progress of education in the several States and Territories . . . " (U.S. Department of HEW 1969, p. 47). Later, these duties were assumed by the U.S. Office of Education and until the mid-1950s they constituted the total federal commitment to educational R&D (Clark 1974, p. 4).

In 1953, the new Commissioner of Education, Samuel Brownell (1955, p. 2), sought to expand the R&D functions of the U.S. Office of Education (USOE): "If I were asked to name the one field in which the Office can be of greatest service at this time, I should answer 'educational research' ". In 1954 the Cooperative Research Act (P.L. 531) authorized the Commissioner of Education to enter into "contracts or jointly financed cooperative arrangements with universities and colleges and state educational agencies for the conduct of research, surveys, and demonstrations in the field of education." Although the Act was not funded until 1956, and then at a low level, it represented the first federal commitment to an educational R&D role broader than data collection and dissemination.

The Elementary and Secondary Education Act of 1965 expanded the

USOE involvement in educational R&D. A wide variety of new programs were initiated under the authority of Titles III and IV of the 1965 Act. In an effort to improve dissemination and utilization of research results, 21 R&D centers were established, as well as 20 regional laboratories, to develop projects and interact directly with school systems. To complement its investments in educational R&D, USOE funded the Educational Resources Information Center (ERIC) in 1966 to serve as an information collection and retrieval system for providing ready access to educational literature. By the early 1970s, "literally thousands of Title III projects were funded in local school districts and the federal investment in education R&D (loosely defined) was approaching $200 million (per year)" (Clark 1974).

Perhaps as a result of the rapid growth of the federal investment in educational R&D, support grew for the establishment of the National Institute of Education (NIE) to serve the educational community in much the same manner as the health community is served by the National Institutes of Health. The Educational Amendments Act of 1972 authorized the formation of NIE to: "help to solve or to alleviate the problems of, and promote the reform and renewal of, American education; advance the practice of education, as an art, science, and profession; strengthen the scientific and technological foundations of education; and build an effective educational research and development system" (U.S. Department of HEW 1973, pp. 9-10).

FEDERAL COMMITMENT TO VOCATIONAL EDUCATION R&D

The Smith-Hughes Act of 1917 and the George Barden Act of 1946, which provided federal funds for vocational education, permitted support of studies and reports designed to improve the administration and management of vocational education programs, but neither provided specifically for R&D funding. Prompted by the report of the 1961 Panel of Consultants on vocational education (U.S. Department of HEW 1963), the Vocational Education Act of 1963 explicitly provided substantial funding for vocational education R&D. The Panel observed that most of the small amount of R&D in vocational education had been applied research; almost none had been experimental research under controlled conditions. Most of the research had been local in scope and was little known outside its own locality. The Panel also noted that a considerable amount of the research had been devoted to the collection of data, with little attention to interpretations of the data collected and their implications.

In its report, the Panel noted several factors that had contributed to

some of the shortcomings of vocational education research. First, few individuals had been trained for research in vocational education, and vocational educators did research only to solve problems, not to prevent them. Second, much of the research in vocational education was done to fulfill requirements for graduate degrees; these requirements fostered minor studies rather than comprehensive research projects. Third, comprehensive research is facilitated by adequate financing and organizational structures, neither of which was available. (Other reasons for the absence of major research efforts can be found in the full report of the Panel.)

The research committee of the 1961 Panel recommended funds earmarked for research and advocated the establishment of a research center or clearinghouse to coordinate, stimulate, and conduct R&D activities.

Section 4(c) of the Vocational Education Act of 1963 reflected the Panel's concern with research:

> Ten per centum of the sums appropriated pursuant to section 2 for each fiscal year shall be used by the Commissioner to make grants to colleges and universities, and other public or nonprofit private agencies and institutions, to State boards, and with the approval of the appropriate State board, to local educational agencies, to pay part of the cost of research and training programs and of experimental, developmental, or pilot programs developed by such institutions, boards, or agencies, and designed to meet the special vocational education needs of youths, particularly youths in economically depressed communities who have academic, socio-economic, or other handicaps that prevent them from succeeding in the regular vocational education programs.

The 1963 Act also provided for the creation of the ad hoc Advisory Council on Vocational Education (the Essex Council), which reviewed the entire vocational educational program between 1963 and 1967. In December 1967 this group presented a series of recommendations that expressed dissatisfactions with the nature of the research and the administration of the research program. The Essex Council recommended reducing administrative complexities, providing specific training for the handicapped, authorizing work-study programs and residential vocational schools, and increasing the emphasis given to post-secondary and adult programs. The Council recommended changes in federal-state relationships in order to give greater latitude to the states in both program planning and management. It was recommended that ten percent of the funds appropriated for vocational education continue to be available for research-related activities, including the support of state research coordinating units and state research programs. The Council also recommended that funds be allocated directly by the Commissioner of Education to support research on critical problems of national scope.

Like the 1961 Panel, the 1967 Essex Council wanted the administration, supervision, and coordination of the research funds to remain in the vocational education division of the U.S. Office of Education in order that such research might bear directly upon the needs of vocational education.

The 1968 Amendments incorporated many of the Essex Council's recommendations, including continuation of the ten percent authorization for research and a new division of research funds on a 50/50 basis between the U.S. Commissioner of Education and the states. The Amendments specified that, in addition to research, exemplary projects and curriculum development be supported with R&D funds.

OVERVIEW OF VOCATIONAL EDUCATION R&D

Between 1965 and 1974 (inclusive), the U.S. Office of Education spent close to $250 million to support almost 5,000 vocational education research and development projects. This section gives a brief description of the funding, priority areas, and general characteristics of that R&D, which was conducted under the 1963 Act and 1968 Amendments and administered by USOE. Project listings, abstracts, and files were supplied by the Division of Research and Demonstration, Bureau of Occupational and Adult Education, U.S. Office of Education. An evaluation of demonstration projects was also reviewed (Development Associates 1975). Detailed tables summarizing the information on which this discussion is based are presented in Appendix C.

Section 4(c) of the 1963 Act provided support for vocational education R&D for fiscal 1965 through fiscal 1969. Beginning in fiscal 1970, R&D has been supported under the authority of Parts C, D, and I of the 1968 Amendments: Part C funds support research, demonstration, and curriculum development; Part D funds are used to demonstrate innovative vocational education or career education programs in school settings; and Part I funds are authorized to support curriculum development and dissemination. Since all funding for R&D supported under Section 4(c) was superseded by Part C, Section 4(c) expenditures are analyzed in conjunction with the discussion of Part C.

Table 1 presents fiscal data for the separate parts of the vocational education R&D program from fiscal 1965 through fiscal 1975. The administration requested the full authorization for any part only in fiscal 1965 and fiscal 1966. In each year except fiscal 1971, the request for Part C has been for less than one-third of the authorization; the request for Part D, less than one-fourth; and for Part I, less than one-half.

In fiscal 1965, 1966, and 1972 through 1975 (except for Part I in fiscal

TABLE 1 Funds (in millions) for Parts C, D, & I and Section 4 (c)

Fiscal Year	Authorized	Requested	Appropriated
		SECTION 4 (c)	
1965	$ 11.8	$11.8	$11.8
1966	17.8	17.8	17.8
1967	22.5	17.8	10.0
1968	22.5	17.1	13.6
1969	35.5	15.7	11.6
TOTAL	$110.1	$86.2	$64.8
		PART C	
1969	$ 35.0	$ 0	$ 0
1970	56.0	1.1	1.1
1971	67.5	*	35.8
1972	67.5	†	18.0
1973	67.5	18.0	18.0
1974	67.5	18.0	18.0
1975	67.5	18.0	18.0
TOTAL	$428.5		$108.9
		PART D	
1969	$ 15.0	$ 0	$ 0
1970	57.5	13.0	13.0
1971	75.0	*	16.0
1972	75.0	†	16.0
1973	75.0	16.0	16.0
1974	75.0	16.0	16.0
1975	75.0	16.0	16.0
TOTAL	$447.5		$93.0
		PART I	
1969	$ 7.0	$ 0	$ 0
1970	10.0	2.0	.9
1971	10.0	*	4.0
1972	10.0	†	4.0
1973	10.0	6.0	4.0
1974	10.0	4.0	4.0
1975	10.0	4.0	1.0
TOTAL	$67.0		$17.9

NOTE: During each year of Part C funding, a small number of special projects of national scope have been supported by a skim-off of the state allotments of the Commissioner's Part C funds. Funding for these projects are included in this table but in no others in this report.

*Combined requests for Parts C, D, and I was $25.7 million: the combined appropriation was $55.8 million.

†Combined request for Parts C, D, and I was $36.0 million: the combined appropriation was $38.0 million.

1975), appropriations equaled requests; in fiscal 1971 and 1972 appropriations exceeded requests. In all, $284,430,000 was appropriated for vocational education R&D between fiscal 1965 and fiscal 1975 (of which almost $250,000,000 had been spent through fiscal 1974); this represented less than 28 percent of the amount authorized.

Appropriations for Section 4(c) ranged between $10 million and nearly $18 million. Part C has received $18 million per year since fiscal 1972. Since fiscal 1971, Part D has received $16 million per year. Part I, the smallest of the three programs, received $4 million per year between fiscal 1971 and fiscal 1974 and was reduced to $1 million in fiscal 1975. However, since Part C funds can be used for any Part I activity and Part D can support demonstrations of new curricula, the severely reduced funding for Part I did not necessarily lead to a parallel reduction in curriculum development projects.

PARTS OF THE R&D PROGRAM

Section 4(c) and Part C

Funds from Section 4(c) and Part C have been used to support grants and contracts for research; training programs to familiarize personnel with research results and products; developmental, experimental, or pilot programs intended to meet the special vocational needs of youth, especially disadvantaged youth; demonstration and dissemination projects; and state RCUs, which administer and sometimes conduct state research and development programs. As noted above, all of the activities specified under Parts D and I can also be conducted under Part C.

While Section 4(c) funds were reserved for the Commissioner of Education for direct federal grants and contracts, Part C funds are divided equally between the Commissioner and the states. Both the Commissioner's share and the states' share of Part C funds are allocated to states according to a population and income formula. Income is a negative factor in the equation; that is, states with a higher per capita income receive less money. Different age groups in the states' populations are differentially weighted: ages 15–19 most heavily, ages 20–24 less, and ages 26–65 least.

Federally administered Part C projects, typically 18 months long, are selected from proposals made in response to announcements published periodically in the *Federal Register*. The states' share of Part C is used to pay part of the costs of R&D programs and projects in accordance with the state plan. Because both federal and state shares are distributed by state according to a population formula, and because in some states only

the state education agency (SEA) applies for the federal share, SEAs sometimes receive both shares. Except for a few large projects, awards for study of national scope are charged against the federal share allocated to the state in which the national study has its headquarters.

Funding and Project Size Under Section 4(c), projects averaged between $60,000 and $90,000 each. In fiscal 1971, eight large career education models (averaging over $1,000,000 each) were funded from the Commissioner's share of Part C, inflating the mean project size to over $500,000. In fiscal 1972 and fiscal 1973, more projects were funded—at least one in each state—and, consequently, the mean project size decreased. With full competition in fiscal 1974, mean project size decreased further. From fiscal 1971 through fiscal 1975, there were between 400 and 700 state Part C projects annually at a mean cost of $12,000 to $20,000 each.

Types of Projects Under Section 4(c), about 32 percent of the funding supported applied or fundamental research, while about 37 percent supported experimental, developmental, or pilot projects. In fiscal 1971, about 68 percent of federal Part C funds supported experimental, developmental, or pilot projects, and in fiscal 1972 and fiscal 1973, all of the federal Part C money went to such projects. In fiscal 1974, however, only 31 percent of Part C funds supported experimental, developmental, or pilot projects and 68 percent supported research.

For state Part C projects, a rough classification by project titles indicates that less than 40 percent of the classifiable projects can be called research even in the broadest sense of the term. About 35 percent of the awards went to developmental projects, and the other awards supported demonstrations, evaluations, dissemination, or research coordinating unit activities. This classification must be taken as only a rough approximation: it is very difficult and sometimes impossible to classify projects by title only, and only titles were available. Between 19 and 25 percent each year could not be classified at all. It seems clear, however, that the world "experimental" as it is used in the phrase experimental, developmental, or pilot projects rarely refers to scientific experiments; rather, it usually seems to mean a trial accompanied by subjective evaluation.

R&D Topics Priority areas are announced yearly by USOE for Section 4(c) and for the Commissioner's share of Part C. They have changed substantially from year to year for the 10-year period surveyed:

FISCAL 1965–FISCAL 1967

Program evaluation
Curriculum experimentation
Personal and social significance of work
Personnel recruitment and development
Program organization and administration
Adult and continuing education
Occupational information and career choice

FISCAL 1968–FISCAL 1969

Application of manpower data to occupational education
The student and his environment
State and local planning techniques
Instructional systems development
Career development, guidance, placement, and follow-up
Instructional facilities
Organization and administration
Research and development centers
Evaluation

FISCAL 1971

Same as fiscal 1968 and fiscal 1969, excluding R&D Centers

FISCAL 1972–FISCAL 1973

Career education with a strong guidance and counseling component

FISCAL 1974

Curriculum studies
Disadvantaged, handicapped and minorities
Alternative work experience programs
Guidance, counseling, placement and student follow-up
Manpower information and system for education

FISCAL 1975

Administration of vocational education at the state level
Administration of vocational education at the local level

Comprehensive systems of guidance, counseling, placement, and follow-through
Services
Educational personnel serving the educationally disadvantaged, handicapped, and minorities
Curriculum, demonstration, and installation studies

The priority areas are very broad, indicating that USOE has chosen to study many different topics related to vocational education rather than focusing on a few. (Information on the priority-setting process and the resultant instability in priorities is presented in Chapter 5. Additional information on the shifts in emphasis among the priorities is presented in Appendix C.)

The Section 4(c) program can be characterized as covering five major topics: (1) identification of current and emerging training needs, (2) vocational curriculum development, (3) problems of vocational education resource development, (4) vocational guidance and career choice processes, and (5) adult and continuing education. In its early years, the program focused most sharply on curriculum development; in fiscal 1967 through fiscal 1969, it became involved in the development of a program called Educational System for the '70s (ES '70). This program was intended to focus primarily on equipping each high school student with a specific marketable skill plus the academic prerequisites to enter a two- or four-year post-secondary institution. Throughout the 4(c) program, support was also given to the establishment of new institutional programs, including funding teacher-administrator in-service training institutes, national vocational education R&D centers, and state research coordinating units.

Over the period fiscal 1971 to fiscal 1975, by far the largest portion of the Commissioner's share of Part C funds was spent on career education and career guidance. This is also the only topic that received funds every year. In an attempt to assist the states with the development and implementation of local career education programs, in fiscal 1972 and fiscal 1973 the Commissioner turned over to the states $9 million of the Commissioner's share for the purpose of establishing a career education site in each state.

Part D

The 1968 Amendments authorize Part D funds to support exemplary, pilot, and demonstration projects at elementary and secondary school levels. Part D funds are also divided equally between the Commissioner and the states. A major emphasis of the Commissioner's share of Part D,

which is 50 percent of the total, has been career education. The principal objectives of Part D projects have been to familiarize students with occupations and to provide work experience programs, guidance, and counseling. Part D projects have served as demonstration sites within each state, providing practical, operating examples of career education.

As required by law, the federally administered Part D projects are geographically distributed in such a way that each state has at least one project. Additionally, a population formula ensures that larger states receive larger awards. Most projects are funded for a three-year period.

A state's share of Part D funds is usually granted by the state to local school districts or individual local schools for exemplary programs. In some states, the state Part D funds are combined with those of the federal share to support one project.

In the first round (fiscal 1970 through fiscal 1973) of Part D funding from the Commissioner's share, at least one project in each state was funded for a three-year period, although not all projects began during the first year. The first round of funding supported 66 projects in all, and the second round (fiscal 1973 through fiscal 1976) supported 52 projects. Allocations were approximately $100,000 to $200,000 per state per year, but obligations were usually considerably less than allocations.

Between fiscal 1970 and fiscal 1972, the states' share of Part D supported between 300 and 410 projects per year at a median cost of approximately $130,000 per project. (Development Associates calculated median rather than mean funding level due to the skewed distribution of funding levels.) Thus, both state and Commissioner's Part D projects were funded at approximately the same level.

Part I

Part I funds are used to promote the development and dissemination of vocational education curriculum materials, to develop standards for curriculum development, to coordinate state efforts and prepare current lists of available materials, to survey curriculum materials produced by other government agencies, to evaluate materials and their uses, and to train personnel in curriculum development.

Nearly all of the Part I money has been spent on curriculum development and dissemination. Very little has been spent on the establishment of standards for curriculum development or on evaluation of the materials developed.

Unlike Parts C and D, all Part I funds are federally administered. Most activities are carried out through individual projects developed in response to requests for proposals. The U.S. Commissioner of Education

is authorized to make grants and contracts with colleges and universities, state boards of education, and other public and nonprofit private agencies and institutions, as well as profit-making institutions. Project duration ranges from one to four years. Because there are no geographic restrictions on Part I awards, there has not been one Part I project in each state each year. Between fiscal 1971 and fiscal 1974, Part I funds supported between 13 and 28 projects per year; the average award size ranged from $122,000 to $391,000.

In 1972 the Office of Education developed 15 occupational clusters to guide curriculum development: agribusiness and natural resources, business and office, communications and media, construction, consumer and homemaking, environment, fine arts and humanities, health, manufacturing, marine science, marketing and distribution, personal services, public service, recreation and hospitality, and transportation. This represented a significant shift from the more traditional notion of seven primary vocational education areas: agriculture, distributive education, health occupations, home economics, office occupations, technical education, and trade and industrial occupations. Between fiscal 1972 and fiscal 1974, more than half of the Part I curriculum development projects addressed two or more of the 15 occupational clusters.

CONCLUSIONS

Several broad generalizations can be drawn from the information presented in this chapter. First, there has been more development and demonstration than research in the past decade of vocational education R&D. In addition, most early research was largely descriptive rather than experimental. In the mid-1960s there were few vocational education personnel who knew how to conduct research projects and the social scientists involved knew little about vocational education.

Second, career education has been heavily emphasized, especially in projects supported by funds from Parts C and D. In 1971, at the Commissioner's direction, USOE invested $7.5 million of Part C and D funds in the development of six large-scale, school-based, career education models. Alternative approaches to career education were also funded in fiscal 1971; employer-based, home/community-based, and residential-based career education models were heavily supported. (In fiscal 1975, for the first time, a separate career education budget of nearly $10 million was approved by Congress.)

Third, there has been much activity in curriculum development, although Part I has always been the smallest of the three parts. Part C has supported the development and dissemination of many curriculum mate-

rials. Part D has also supported demonstration sites to aid in the installation of new curricula.

It should be noted that many of the data that would have helped this Committee describe the vocational education R&D program were not available. For example, only project titles, name of grantee or contractor, and amount of award were available for state Part C projects: even short abstracts of the projects could not be obtained. Final reports, when submitted, are sent to ERIC, where they may or may not be reproduced, and stored by USOE in permanent, relatively inaccessible files. If this information had been readily available, the Committee could have prepared a more thorough description and assessment of the R&D programs.

4 Assessment of Vocational Education R&D

What has been gained from the $250 million invested by the U.S. Office of Education in vocational education R&D over the past decade? The Committee's assessment of the vocational education R&D program focused on two questions: What contributions have been made by R&D to knowledge about vocational education? What has been the impact of R&D on students? Both of these questions have been difficult to answer.

In its attempt to identify the accumulation of knowledge on various topics related to vocational education, the Committee was hampered by the absence of reports on projects funded by USOE. Because the work funded only by USOE could not be reviewed as a separate body of literature, the Committee reviewed research related to vocational education--regardless of funding agency. (The results of that review are summarized in Appendix A, and a related discussion of research issues is presented in Chapter 2.) In looking for evidence of impact of R&D on students, the Committee and staff interviewed many people involved in vocational education and its R&D, conducted hearings, and reviewed evaluation reports. (The individuals and organizations that were contacted are listed in Appendix B.)

R&D conducted by federal agencies to address social problems can serve primarily either the agency or the practitioners throughout the country. For example, the Department of Labor conducts its manpower R&D program to produce information for its own use and to help solve national manpower problems, while the vocational education R&D program in the Office of Education serves primarily the needs of practition-

ers. USOE allocates R&D funds by state in order to meet the differing needs of the numerous vocational education programs, which are operated by state and local education agencies. Evaluation of vocational education R&D is quite difficult because of the complexities of the educational and R&D programs: the thousands of R&D products should be evaluated according to the differing needs of practitioners and in settings appropriate for their intended use.

Assessing the impact of the R&D program on students has been difficult because there are virtually no data that permit a rigorous evaluation of all the R&D and its outcomes. Project evaluations have been rare, and the impact measures used have been weak, superficial, and transitory. Evaluation of demonstration projects has been especially problematic, partly due to lack of criteria for measuring success. In addition, follow-up or longitudinal data on graduates from various vocational education and other programs have not been collected. The Committee has therefore based its assessment of vocational education R&D on incomplete and sometimes subjective information, program evaluations, and project descriptions.

The Committee had difficulty finding evidence that R&D has had a measurable impact. Although we do know that some R&D products have been disseminated and used by practitioners, we do not know what proportion of the total they are or what proportion is either reasonable or desirable. Further, we do not know how well these products fit the needs of potential or actual users. Even complete information about implementation of R&D products does not accurately reflect impact. Since research often involves testing ideas or products, discovering that a promising idea or product is, in fact, unworkable is still a valuable contribution. Many ideas or products should not be implemented or adopted, and researchers perform a valuable service by finding evidence that prevents wasteful application.

In short, there are no hard data to substantiate the belief that the vocational education R&D prompted by the legislation of 1963 and 1968 has improved vocational education. Even though there are other benefits from R&D (such as accumulation of knowledge, building R&D capability) these have rarely been measured, documented, or validated.

LARGE-SCALE EVALUATIONS OF R&D

There have been major efforts by two organizations (Project Baseline and Development Associates, Inc.) to evaluate broad impact of vocational education R&D. Project Baseline, located at Northern Arizona University, is funded under the federal share of Part C of the 1968 Amendments

to collect data and report on several aspects of vocational education in the United States. Project Baseline, which usually receives over $200,000 yearly, has produced four comprehensive annual reports and several supplemental reports on such topics as preparing vocational education teachers, women in vocational education, and the impact of manpower training programs on the labor market. Project Baseline attempted to evaluate state-administered Part C and D projects and federally administered Part D projects; this evaluation of R&D is just one of their recent activities. Development Associates, Inc., a private management consulting firm specializing in evaluating social programs, attempted to evaluate Part D programs, focusing more sharply on the federal than the state projects. These evaluations have had only limited success and produced rather narrow and superficial definitions of impact. There is not more evidence of impact partly because impact is not usually immediately manifest, and this Committee is studying a time span that is both short and recent.

The Committee presents the findings of Project Baseline and Development Associates both for their inherent value and to explain the need for more and higher-quality evaluative data. These two projects present the only large-scale evidence of impact of vocational education R&D known to the Committee. However, the reader should be cautioned that the data collected by these organizations and presented here are not adequate for a rigorous evaluation. Project Baseline surveyed people who had been deeply involved in the projects evaluated, so the probability of judgments biased in favor of the R&D is extremely high. Development Associates' conclusions are tenuous partly because of problems in obtaining unambiguous enrollment data on the students sampled.

PROJECT BASELINE

Project Baseline attempted to determine the impact of research, development, and exemplary projects on vocational education funded under the state-administered Part C program, the state-administered Part D program, and the first round of the Commissioner's share of the Part D program. In Project Baseline's Fourth National Report (Lee 1975) the term "impact" is used to mean the extent to which local districts have maintained and implemented previously developed products and results. This measure of impact was used to assess project outcomes because Baseline did not have nor could it obtain accurate measures of changes in student skills and other evaluative data.

The impact of federally administered Part D projects is classified in five categories:

1. Implementation in many states
2. Extensive implementation within a state (Extensive is operationally defined as enough acceptance that the majority of schools in the state are using some or all of the concepts, materials, and other products.)
3. Some implementation in several areas of a state
4. Implementation within a district
5. Minimal or no implementation

A similar classification scheme is used for state-administered projects:

1. Wide implementation or extensive use within a state
2. Implementation in the original site and in a few additional sites
3. Implementation only in the original site
4. Use of results as a basis for additional work
5. Little or no known current use

An effort was made by Baseline to assess 54 federally administered Part D projects by reading final reports and interviewing project directors by telephone. Interview questions solicited information regarding the extent of the dissemination and utilization of R&D results and products. Baseline found that 40 of the 54 projects fell into the first four categories; they "have had some impact in bringing about changes in at least a few additional school districts within their states and in additional schools within their own districts" (Lee 1975, p. 61). Twelve of the 40 projects have had extensive impact within the state (category 2), and four have been adopted in whole or part by other states (category 1).

Stratified random samples of state-administered Part C and D projects were selected for assessment by Project Baseline. Stratification of Part C projects was based on statewide versus local focus and whether or not impact was primarily on policy, administrative practices (including guidance), or instruction. Part D projects were stratified according to the following topics: "cooperation between education and manpower, post-secondary education programs directed toward out-of-school youth, and programs for young people in school" (p. 63). Information about projects was obtained by telephone contact with research coordinating unit directors, project directors, or school district personnel. Respondents were asked about the extent to which projects, methods, and results had been implemented in additional schools or school districts. There was no follow-up to determine the duration of newly adopted programs or products or to verify the responses independently. Baseline found that 94 percent of the sample of 96 state-administered Part C projects had had some impact, at least locally (categories 1-4); 29 percent were "widely

implemented or extensively used" (category 1). There were similar findings for state-administered Part D projects: 97 percent had some impact (categories 1-4) and 20 percent were widely implemented or used (category 1).

Problems in obtaining student outcome information were experienced in the Project Baseline evaluation. The lack of baseline data made it impossible to assess accurately indicators of student growth and progress. Instead, the study describes several state-administered Part C and D projects that were judged by state R&D personnel to have had the greatest impact. Again, success appears to have been determined by the extent to which the product is used by other schools, generates interest among students, teachers, and the community, and provides information for use by teachers and administrators. The benefits of using research results were not assessed.

DEVELOPMENT ASSOCIATES

In their evaluation, Development Associates attempted to assess the Part D program for USOE, using pre- and post-treatment measures of career development. For each of the 50 projects selected for evaluation, experimental groups were drawn from students in grades 6, 9, and 12 participating in Part D programs, and control groups were drawn from students not participating in those programs. The study was hampered by difficulties in sample identification: " . . . most projects were not able to identify precisely either the students who were 'participants' in the program or what constituted 'participation'" (Development Associates 1975, p. 23).

Questionnaires and tests of student outcomes were given to experimental and control groups. The 13 questions used to measure student outcomes included:

Are student participants able to identify a greater number of occupations than non-participants?

Do students demonstrate more familiarity with tasks and functions associated with selected occupations than the comparison groups?

Are a greater number of students who have graduated from school and who participated in the Part D project employed full-time or engaged in further training than students who did not participate?

The questionnaires produced mixed results. Five questions were eliminated from the summary due to factors such as insufficient or invalid

data. Significant differences between participants in the Part D projects and non-participants were found for only some grade levels on only three outcome questions. In light of the problems of identifying the study sample as well as the inconclusive findings, it is impossible to conclude that the Part D projects significantly improved student outcomes.

Several of the problems of evaluating vocational education R&D after projects have been completed are evident in the work of Development Associates: participation in the projects was hard to define since it is not a simple yes/no variable. Because of inadequate records, administrators had difficulty in determining which students had participated in the projects; the measures of impact that could be collected were somewhat weak. In addition, placement and follow-up data, which Development Associates did not have, can be collected only with expenditures of much time and money. Even though the study appeared to be very carefully planned, it could not overcome the shortcomings imposed by these other factors.

EXAMPLES OF PROJECTS JUDGED TO BE SUCCESSFUL

Definitive conclusions on the whole body of vocational education R&D cannot be drawn on the basis of the two national evaluations described above. Therefore, in an attempt to find some substantiation of the impact of R&D, the Committee analyzed individual projects on the basis of their descriptions.

The Committee was able to locate a number of projects with some measure of impact. Six projects judged to be successful were drawn from lists compiled by USOE and the Southwide Research Coordinating Council; other examples were supplied by Committee members and a consultant. The nine examples are described here.

U.S. OFFICE OF EDUCATION

Eighteen federally funded projects were cited by Howard F. Hjelm and Glenn C. Boerrigter (1974) as examples of visible and useful accomplishments of vocational education R&D over the past decade. Three projects taken from their list are described below. The Committee selected these projects as examples because they demonstrate three different objective measures of impact.

In the initial phase of the Aviation Mechanics Project (reported in Allen 1968), a core curriculum for aviation mechanics was identified. During Phase II, airlines and aviation companies were surveyed in order to identify industry requirements. Phase III consisted of two parts: Dur-

ing Part I, 100 teachers were involved in curriculum development and teacher training. During Part II, 30 percent of the companies surveyed in Phase II were resurveyed. The second survey showed the necessity for readjusting school curricula in major tasks such as painting and welding. As a result, the core curriculum was updated and a method by which the Federal Aviation Administration could continue periodic updates was established. Recommendations made on the basis of the second survey reflect current requirements of the aviation industry. Establishing a method for industry to update vocational curricula may provide more relevant training for vocational students, but the actual improvement in student job prospects and the advantage to employers in hiring graduates trained with this curriculum have not been measured.

The objective of the Electro-Mechanical Equipment Technology Project (reported in Roney 1971) was to assist two-year colleges in establishing training programs by developing the necessary planning and instructional materials and by providing direct program planning assistance. Researchers developed and tested an integrated system of instruction built around discrete technical concepts that are basic to more than one technology. Student achievement was measured and recorded at all stages of the project. Instructional materials were tested on students and revised. Case studies were written for the purpose of identifying administrative problems. By the end of the project, materials were being used in 30 states and planning assistance had been provided to 375 schools. Materials were disseminated widely after the project was completed.

Evaluation of the electro-mechanical equipment curricula showed that students successfully learned skills and knowledge in electro-mechanical equipment technology. However, it is not clear how many of the students who used the curriculum materials were placed in jobs or how many used the acquired skills and knowledge on the job. The success of the project cannot be fully determined until it can be shown that the students trained in electro-mechanical equipment technology gained an advantage in finding and keeping good jobs because of their training.

"The Kingdom of Could be You" (reported in Sutherland Associates 1974) consisted of 16 short cartoon and real-life films related to occupational clusters. The project had three objectives: to develop awareness of future job opportunities in young children; to enlarge the vocational self-concept by encouraging children to see themselves in a variety of occupational roles; and to engender a work ethic in children. The films were originally presented on the Captain Kangaroo Show.

The film evaluation project involved 124 children, three to seven years of age, with appropriate ethnic, sex, and socioeconomic distribution. Pre- and post-tests were used to measure gain in career awareness. Children

showed a remarkable gain in awareness of occupational opportunity as judged by comparison of interviews before and after exposure to the films. The 16 films are available from a commercial distributor.

SOUTHWIDE RESEARCH COORDINATING COUNCIL

The Southwide Research Coordinating Council, consisting of the research coordinating units in 14 states in the southeastern United States, compiled a casebook of R&D activities they judged to have had impact (1975). The report is not intended to assess all vocational education R&D, but to demonstrate that some projects have had a positive impact in the Southeast. Although the sources of information are not explicitly described in the report, it appears that project directors or staff members of projects supplied impact data on their own projects. Therefore, the objectivity of the information is open to question. A sample of three of these 26 projects demonstrates the kinds of projects included and ways in which impact is defined.

The Alabama Vocational Management Information System was designed to provide manpower data for management of vocational education programs in the state. In addition, an accounting system provides fiscal data as well as student enrollment, completion, and follow-up information by teacher, school, program, and occupational objective in order to evaluate programs. As a result, an increase in planning activities has been noted as the data are made available to assist local planning efforts. Special data requests from teachers, administrators, and planners have indicated that the data are needed, and the management information system is reported to have resulted in more accurate and useful information. However, the accuracy of the data supplied by the system has not been evaluated objectively.

A Part D project in Florida, "An Exemplary Model for a Total Ecological Approach to Non-graded Vocational Programs in Separate Educational Centers," was designed to improve students' attitudes toward their environment, improve academic achievement, and develop occupational skills, as well as to develop new techniques for teaching disadvantaged students. Project staff reported that achievement measures indicated that all of these objectives were met. This project was the forerunner of career education in the state, and eventually the model was adopted by all education districts in the state.

A career education project in Mississippi exposed students to occupational education in elementary school and continued preparing students for the world of work through high school and post-secondary school. An evaluation using experimental and control student groups showed

that students in the project had more positive attitudes toward work and a greater knowledge of careers than did students in the control group. Project staff reported that the project's career education methods have spread to 22 school systems in the state.

Most of the other projects listed in the Southwide Research Coordinating Council's report have impact measures similar to those in these three examples. For most placement services, management information systems, and evaluation models, adoption by a certain number of schools or school districts is reported as the measure of impact. Impact of curriculum materials and instructional techniques is reported by adoption and by the number of teachers and students involved. Occasionally, the report of a third-party evaluation is cited. The measures of impact that are reported are generally not objective and do not convey information about changes directly related to students.

OTHER EXAMPLES

Some projects can be considered successful if research findings are used to change program policy. An example was provided by a member of this Committee, the Texas Director of Vocational Education. A Part C project entitled "A Survey of the Occupational and Educational Needs of the American Indian in Dallas County" was designed to collect information for use in program planning. Findings indicated specific educational needs, and on the basis of recommendations in the final report, the Dallas County Community College District (1973) initiated a cooperative education program for Dallas County Indians. Study findings also provided a basis for the development of a pre-school program and a youth program for Indians later funded by USOE. The Inter-Tribal Center and Clinic also used the findings to develop a manpower training program funded by the Department of Housing and Urban Development. Finally, as an outgrowth of the study, the Dallas County Community College District began operating three outreach programs designed to recruit and counsel American Indian students and other minority group members. However, the impact of the pre-school, youth, manpower training, and outreach programs has not been studied in formal evaluations.

A nationwide project on allied health occupations (reported in Anderson 1973 and Fielstra 1973) developed, validated, tested, and disseminated instructional material for more than 20 allied health occupations. Nationwide conferences and national advisory committees were involved in developing the instructional material. Twelve of the final instructional material documents were published by commercial publish-

ers. One of the publications (nursing) has sold over 80,000 copies, and another (dental assisting) has sold nearly 35,000 copies. These materials have been used by every state in the nation and by 35 foreign countries. Other materials not published commercially are in great demand three years following the completion of the basic project. Again, however, students trained with these materials have not been followed up to determine how helpful the materials are in preparing students for jobs.

Krumboltz et al. (1967, 1968) constructed "job experience kits" in accounting and six other occupations in order to test the social learning theory that career interests are learned as a result of successfully mastering occupationally related tasks. The kits were designed to stimulate young people to explore career opportunities by exposing them to simulated occupational tasks and easily solved problems. In one of the studies the theory was tested by administering the accounting kit to a random sample of high school students and giving control groups other information about accounting or general occupational information. Follow-up interviews and questionnaire responses revealed that interest in accounting was increased by the problem-solving accountant kit significantly more than by other treatments. Interest in 41 other occupations changed no more than would be expected by random fluctuation; however, the experience of using the accounting kit seemed to stimulate later inquiries about other occupations. Other experimental results showed that problem solving was an effective method of stimulating interest, particularly for students from communities of low socioeconomic status. The developers of the job experience kits contracted with an outside agency to develop kits in 13 more occupational areas and to distribute them nationally. The kits have been distributed in every state.

CONCLUSIONS

Although the examples of projects cited here represent only a fraction of the thousands of projects funded, they demonstrate some of the potential contributions of vocational education R&D to vocational education. The actual contributions have not been well-documented: most of the projects described as successful have not been rigorously evaluated. Often, they are said to have impact because research products are "widely disseminated" or "interest is generated" among students and teachers. Projects are also said to be successful if their reports are published commercially and large numbers of copies are sold. It should be noted that few of the projects cited as successful have addressed the needs of students in secondary schools, where vocational education enrollments have been concentrated.

Rarely has it been shown that students have benefited from the projects cited as successful. In most cases it cannot be determined that R&D results or products are actually used, and, if they are used, it cannot be determined whether they have any significant or long-lasting effects on students. The lack of evidence implies that much vocational education R&D has probably not had a widespread effect on classroom activities and student outcomes.

PERCEPTIONS OF R&D EFFECTIVENESS

In the interviews and hearings conducted by the Committee and staff, respondents were requested to give information on the impact of R&D on various groups of vocational education consumers, especially students.

Virtually all of the people interviewed had great difficulty in judging the effectiveness of the research and development familiar to them. The effects of R&D are diffuse: R&D may affect the work and attitudes of federal and state administrators of both vocational education and R&D, other researchers, teachers, other school personnel, students, and employers of vocational graduates. All respondents felt it nearly impossible to trace changes in students' acquired abilities and attitudes to research projects. Most could cite advances in vocational education that had accompanied progress in research but were not necessarily caused by research. Some improvements that were mentioned often are an increase in student enrollment, "better" and "more meaningful" programs, improved teacher attitudes, and greater student enthusiasm.

One research coordinating unit director stated that vocational education R&D has enhanced the stature of other types of research in his state; people recognize that research can be practical and is, therefore, valuable. There have been similar improvements in the image of vocational education as a result of increased awareness of the field by the public.

Several people have noted that research may have benefits that are less visible than the accumulation of knowledge about particular topics. Scientific research is often described as a way of testing existing hypotheses, but it can also raise new questions, or help to map unexplored territory as well as test existing hypotheses. Researchers can reformulate old questions on the basis of new evidence.

Some of the people interviewed have observed innovative demonstrations and development programs and believe them to be more interesting than traditional programs. In one state, the teaching efficiency in a nursing program has increased due to an innovative project, resulting in a shorter program covering the same amount of material. This sort of measure is much more quantifiable than many, for example, measures of

students' enthusiasm or the effectiveness of programs. Some of those who often visit the schools are convinced that exciting things are happening partly as a result of vocational education R&D efforts. It is as difficult to refute such statements as it is to use them as hard evidence that R&D has made a difference.

Virtually no hard data on the impact of R&D projects were presented at the hearings conducted by the Committee. Some witnesses noted that impact is very difficult to assess since many factors, not just R&D, affect events. Some noted that knowledge has increased in certain areas, but they were not asked to substantiate such statements and did not do so. One local administrator stated that he had observed very little impact as a direct result of R&D. He noted that many local vocational education administrators share his perception of R&D. Most of the witnesses, however, were very enthusiastic about R&D and its value in improving vocational education.

The mere existence of vocational education R&D is felt by many to have had some notable benefits not specifically related to changes in the structure and content of vocational education and the R&D program. Funding for vocational education R&D has most certainly helped develop research capability and increased the prominence of vocational education. Research personnel have been drawn to vocational education, vocational educators have gained experience in research, and a community of vocational education researchers has developed. In addition, research institutions supported by R&D funding have added to the visibility of vocational education R&D and have provided a setting that potentially increases research capability. Most of those interviewed noted changes in the supply of useful data as a result of research. Perhaps equally important is the seldom-noted fact that as the supply of information increases, administrators tend to rely less on intuition and more on data. Finally, as the data supply and demand increase, so do the standards for judging the quality of research.

LACK OF EVALUATIVE MATERIAL

There are no evaluative data or even judgmental statements that would make possible a comprehensive assessment of the vast majority of vocational education R&D over the last ten years. A comprehensive evaluation is virtually impossible for two major reasons. First, the priorities and objectives of vocational education R&D have been poorly defined and have rapidly changed so that there are no goals against which to measure actual accomplishments. Second, there has not been a consistent, broadly based, and long-term concern with collecting, analyzing, and reporting

evaluative data on R&D products and their effects on students and society in general.

Rigorous evaluations and follow-up studies are not only costly, but quite difficult to conduct. As is the case with all social science research imposing laboratory conditions on real-life situations is all but impossible for both ethical and economic reasons. Project evaluations in vocational education typically have been self-reports or post hoc, third-party reports rather than evaluations built into project designs. There have been very few follow-up studies to determine the eventual impact of R&D projects on students. The problems associated with evaluation are by no means unique to vocational education. Egon G. Guba explained many shortcomings of the methods of evaluation, but expressed optimism that the problems would soon be solved (Guba 1969, p. 29):

> The American educational establishment is currently making a massive effort at self-improvement. Unprecedented resources, stemming mainly from the federal government . . . , are being expended on a variety of promising but as yet unproved programs. To assure the effective and efficient uses of these resources, and, even more importantly, to determine the real utility of the innovative approaches, it is necessary to gather hard data about their performance. Evaluation is the process best suited for this purpose.
>
> The traditional methods of evaluation have failed educators in their attempts to assess the impact of innovations in operating systems. Indeed, for decades the evidence produced by the application of conventional evaluation procedures has contradicted the experiential evidence of the practitioner.

Advances have been made in evaluation technology since Guba's article was published in 1969, but there are still problems to be solved, and the advances already made must be put into practice. More recently, Jerome Moss, Jr., and Ernst W. Stromsdorfer (1971, p. 261) concluded:

> It is apparent from this review of studies, both non-economic and economic, that the methodological issues facing any analysis of the effects of vocational education are formidable . . . [I]t is our opinion that the existing analyses, taken as a whole, do not use effectively the methodological knowledge which is currently available. For instance, the concept of use of a control group would appear obvious; yet in studies which pose hypotheses whose testing clearly implies the need for a control group, none is employed. And, in other evaluations, where recommendations are made which involved extensive commitment of economic resources, there is no treatment of costs along with benefits. These are only examples. Unfortunately, they do not represent uncommon errors.

CONCLUSIONS AND RECOMMENDATIONS

CONCLUSIONS

The Committee's assessment of vocational education R&D has been limited because a collection of final reports of all R&D projects is not available. Further, data for program evaluation have not been collected. Therefore, the Committee's assessment has been based on partial evaluations conducted by others, small-scale surveys of researchers and administrators, some reports of R&D projects, impressions of acknowledged experts, and judgments of Committee members. The Committee has concluded that vocational education R&D of the past decade has not had documented, widespread impact. The available data do not indicate that vocational education R&D findings and products have had an influence on the knowledge, skills, or employability of large numbers of students.

There are insufficient data to allow for a comprehensive evaluation of vocational education or its supporting R&D. Program success has most often been measured in terms of initial job placement, and little attention has been given to assessing the effects of programs over an extended period of time. The impact of R&D has been measured most often in terms of user acceptance, defined as frequency of requests for information rather than frequency of implementation of findings and installation of products. Impact measures have often been subjective and difficult to validate. They have sometimes been superficial and have failed to consider the long-term consequences of vocational education programs or R&D. In addition, the quantified effects of different programs or projects often cannot be compared because measurements were not standardized across projects.

The Committee recognizes that vocational education R&D is relatively new and that it faces many of the difficulties of all educational research and, in fact, of all social science research. One difficulty is that models for evaluation are not readily available. Further, the effects of R&D projects cannot be isolated: many social, psychological, and economic factors can confound or weaken the impact of R&D.

Despite these difficulties, the Committee believes that vocational education R&D has added to the body of knowledge about vocational education and its students. Vocational education R&D has also produced new programs and classroom techniques for use across the nation. Many curriculum materials have been published commercially and have been purchased by large numbers of people, although the extent to which these products or other research results are beneficial or are actually used by practitioners cannot be adequately determined at this time. Funding

for vocational education R&D has also increased research capability. National and state institutions exist to facilitate and coordinate the conduct of R&D, and numerous researchers have been trained in or drawn to vocational education.

RECOMMENDATIONS

The Committee recommends several interrelated strategies that are necessary for a comprehensive evaluation of vocational education R&D. First, the goals and objectives of the R&D program, which should logically follow from the objectives of vocational education, should be clearly defined. Only then can evaluation measure the degree of success in attaining these objectives. The U.S. Commissioner of Education and state directors of vocational education should begin to fund studies of the objectives and priorities of vocational education programs and related work.

Second, in order to identify in the future contributions made by R&D, funding agencies should be able to provide access to final reports of all R&D projects. Research synthesis documents would be especially helpful in reporting and assessing what has been learned.

Third, USOE should develop, with ample input from researchers and practitioners, a plan for evaluation of R&D that includes the collection of longitudinal data. A planned mix of self-evaluation, agency evaluation, and third-party evaluation is suggested. In general, post hoc evaluations should be avoided. A sample of R&D projects should receive funding for evaluations, planned at the same time as the projects themselves. Not all R&D projects need extensive external evaluation: a few have adequate evaluation built into the research design, and others are so small that adequate evaluation would cost more than the original research.

USOE should determine exactly what factors are to be measured by evaluations. Presently, impact on the knowledge, skills, and employability of students is the most widely accepted factor. Also of interest are the qualifications of the researchers; factors related to research design (quality and appropriateness, implementation, data analyses, interpretations, and the extent of validation of results); the methods of dissemination; and the degree of utilization of products. A comparative, evaluative data base is needed for determining what vocational education programs and R&D have been effective and should receive continued support. Evaluation criteria should be studied and standards developed so that evaluations of different projects would be as nearly comparable as possible, given their inherent differences. However, important questions that are

unique to certain programs or projects should not be eliminated simply because of their uniqueness.

In order to measure the effectiveness of vocational education programs, USOE should collect long-term, follow-up data on a national sample of all people who enroll in vocational education programs and of comparable people who do not enroll. The data collected should include measures such as job satisfaction, upward job mobility, wages, satisfaction of the employer with the worker, and continuation of education (vocational as well as academic, both degree and non-degree). If longitudinal data were collected on new and traditional vocational programs, their differential effectiveness could be studied. Finally, long-term, longitudinal studies of potential client groups could be a useful, albeit expensive, means of gathering data and might be used by USOE for evaluation of vocational education.

Because vocational education R&D is relatively new and rapidly changing, the ongoing program of R&D should be supplemented by the work of an advisory panel charged with studying all of vocational education, including its R&D. This panel should be convened every five years to assess the accomplishments and failures of vocational education and to make recommendations in terms of goals and objectives for the future. The broad, long-range perspective of such an advisory panel would strengthen and give guidance to continuing work in vocational education R&D.

5 Administration of the Vocational Education R&D Program

Vocational education R&D has not had as great an impact as it could have had partly because of certain characteristics of the administration of the R&D program. In this chapter, the Committee recommends several changes in the administration of the program that are intended to improve the resulting R&D. Before these recommendations are presented, however, the structure and management of the R&D program are described.

The administration of the vocational education R&D program is complicated by the need to accommodate two major factors: three categories of R&D (research and development, demonstration, and curriculum development), and three levels of organization (federal, regional, and state). This chapter discusses the administration of the vocational education R&D program with respect to planning, administration, and management, outlining the roles of the major national, regional, and state organizations: the U.S. Office of Education, the two national R&D centers, the National Advisory Council on Vocational Education, USOE regional offices, the National Network for Curriculum Coordination in Vocational and Technical Education, state education agencies, state research coordinating units (RCUs), and State Advisory Councils. (See Appendix B for a discussion of sources of information.)

After the organizations involved in the administration of the R&D program are described, a separate discussion of dissemination and utilization of R&D products is presented. The problem of dissemination and

utilization involves many different types of organizations and so is treated separately.

NATIONAL INSTITUTIONS

U.S. OFFICE OF EDUCATION

The U.S. Office of Education of the Department of Health, Education, and Welfare plays the major role in the administration of the vocational education R&D program. It is responsible for overall planning, including coordination of Part I and of the federal shares of Parts C and D, and for setting priorities. It announces the availability of money for grants and contracts, reviews proposals received in answer to its requests for proposals, and monitors projects once they are funded. USOE is also responsible for some dissemination of information and materials produced by those projects. It is becoming more concerned with evaluation of individual projects as well as evaluation of the entire vocational education R&D effort.

Although the Office of Education in Washington, D.C., has received some guidance from USOE personnel in the ten regional offices of HEW, the functions of the regional offices have not been well defined. Under President Nixon's move to decentralize the government, the regional offices were to be given increased authority, including some decision-making power for the administration of the Commissioner's share of Part D funds; however, after court rulings nullifying certain decentralization actions, decision-making authority was withdrawn from the regional offices. At the present time, the regional offices have very little responsibility for Parts C and I funds or projects: they can review applications for Part C awards and review requests for proposals for Part I awards prior to publication.

The regional offices have a greater role in connection with Part D, participating in planning and setting priorities. They review applications for Part D grants or contracts from states in their regions and send recommendations to the federal office. Other regional office functions in connection with Part D include negotiating grants and awards, providing technical assistance and information to researchers, monitoring ongoing projects, participating in site visits for evaluation, closing out completed projects, and participating in federal office seminars and workshops. On the average, one person in each region is available for these Part D functions, and that person usually has additional responsibilities for other programs.

Administrative Location

Since 1964, the vocational education R&D program has been managed by many different divisions within the Office of Education. To administer the research program, which came into existence as a result of the 1963 Vocational Education Act, an Occupational Research and Planning Unit was established in 1964 within the USOE Division of Vocational and Technical Education. Branches within the Unit were established to manage research in each of three substantive areas identified by USOE: employment opportunities, human resources development, and education resources development and training. Table 2 lists changing administrative locations of the R&D program since 1964. At least partly as a result of these shifts in administrative structure, there is evidence of a rapid succession of contradictory long-range plans.

TABLE 2 Location of Federal Administration of Vocational Education R&D within the U.S. Office Of Education

Fiscal Year	Administrative Location
1964	Bureau of Adult, Vocational and Technical Education Division of Vocational and Technical Education Occupational Research and Planning Unit
1965-1967	Bureau of Research Division of Adult and Vocational Research
1968*	National Center for Educational Research and Development (bureau level) Division of Comprehensive and Vocational Research
1969-1971†	National Center for Educational Research and Development Division of Comprehensive and Vocational Research *and* Bureau of Adult, Vocational and Technical Education Division of Vocational and Technical Education
1972-1973	Bureau of Adult, Vocational and Technical Education Division of Vocational and Technical Education
1974	Bureau of Occupational and Adult Education Division of Vocational Education Research
1975‡	Bureau of Occupational and Adult Education Division of Research and Demonstration

*This change is mostly a change in the title of a group.
†Administration was split between the two divisions.
‡This change reflects only the renaming of a group. In this case, the major organizational structure and personnel involved remained the same. However, in other instances, especially in fiscal 1964-1965 and fiscal 1972-1974, there were major shifts in the personnel and structure involved in administration of the vocational education R&D program.

Coordination

Since 1975 the Division of Research and Demonstration in the Bureau of Occupational and Adult Education (BOAE) has administered the federal half of the Part C research program, the federal half of the Part D demonstration program, and the Part I curriculum development program. The Division attempts to coordinate these efforts by developing plans encompassing all three Parts and specifying their interrelationships. In general, Part C funds support applied research and developmental studies; Part D, demonstrations; and Part I, development of nationally needed curricula. The USOE staff tries to move useful research products into developmental and later into demonstration stages. The staff also strives to coordinate vocational education R&D work with general educational R&D , with R&D in special education, and with research supported by the National Institute of Education (NIE).

Despite those attempts, Parts C, D, and I have not been coordinated to produce a well-integrated research and development program. There is little evidence that Part D demonstrations are based upon information gained from Part C or from products developed under Part I. Instead, Part D funds have generally supported career education models. In addition, each of the three programs has its own set of priorities that may or may not coincide with the priorities of the other two programs.

To some extent, attempts at coordination are hampered by the legislated purposes of the three parts. Part D funds have been used appropriately for career education. In general, they cannot be used to support demonstrations of Part C projects not related to career education. Thus, lack of coordination of Parts C, D, and I is a legislative as well as an administrative problem.

Planning and Setting Priorities

Most of the planning in the Office of Education has been on a year-to-year basis although there are some longer-range plans. Long-range planning of a specific nature is exemplified by the multi-year commitment of the Part I staff to develop curricula in each of the USOE-designated occupational clusters in the early 1970s. The development of occupational cluster curricula was established as a Part I priority in response to pressures in BOAE but outside the Division.

ES '70 (Educational System for the 70's) and career education are notable examples of attempts to initiate long-range planning, and both are also examples of the use of vocational education research funds for purposes that extend well beyond the goals of the authorizing legislation.

Each program was advocated strongly by one administrator and, therefore, was dominant in vocational education R&D for a period of time. David S. Bushnell, Director of the Occupational Research and Planning Program in the Division of Vocational and Technical Education between 1965 and 1969, was the major proponent of ES '70. ES '70 has been closely associated with the idea of an "organic" curriculum that would prepare students for a variety of post-high school activities. The organic curriculum was designed to include both academic and occupational training, as well as components of personal development, real work experience, and post-high school placement.

Career education became a high priority with the strong advocacy of Sidney P. Marland, Jr., Commissioner of Education between 1970 and 1972. The career education program, as originally supported by USOE, was transferred to NIE in 1972. Poorly defined roles created some difficulty for NIE and USOE in formulating an R&D plan for career education. NIE has defined its role with respect to career education as the "examination of the relationship of education and work, and the development of programs and products to improve this relationship" (U.S. Department of HEW 1975, p. 8). USOE's role has been "assistance to states and local education agencies to use, demonstrate and improve the practice of education in relationship to the world of work" (U.S. Department of HEW 1975, p. 8). Not only is it difficult to see the difference between these definitions of career education R&D, but also both clearly overlap with vocational education R&D.

The notions of both ES '70 and career education were dominant (and almost exclusive) themes of the federal vocational education R&D program at various times. For example, several of the Section 4(c) projects funded during fiscal 1967-69 were directed toward the development of the ES '70 program in such areas as career guidance and modern management practices for education. In addition, in fiscal 1972 and 1973, Parts C, D, and I were all oriented towards research, development, and demonstrations that would increase the knowledge base for career education.

There is no evidence that a national dialogue for planning involving a representative segment of the vocational education community or its R&D sub-community occurred during the years 1964 to 1974. A five-year or even a two- or three-year vocational education research agenda has never been published. While priorities are set yearly for Parts C and I, Part D priorities are set every three years.

Procedures for setting priorities are similar for all three programs; the Part C procedure is described here. The yearly procedure has three phases. During the first phase, which lasts about one year, the Director of the Division of Research and Demonstration meets with branch chiefs and

various groups to determine possible priorities. These groups include: The Research Committee of the National Advisory Council on Vocational Education; the State Directors of Vocational Education Research Liaison Committee; an ad hoc group of state RCU directors; Curriculum Coordinating Center directors; USOE regional personnel; and ad hoc interest groups. Recommendations from sources such as General Accounting Office reports, USOE program evaluation reports, the Commissioner of Education, and influential national leaders are also sought.

During the second phase, the Deputy Commissioner for the Bureau of Occupational and Adult Education makes the final decision regarding yearly priorities. Typically, new priorities are favored over the continuance of old priorities.

During the third phase, grant announcements and RFPs are prepared, moved through the administrative levels, and approved for publication in the *Federal Register* (or in *Commerce Business Daily* for contract announcements).

The procedure for setting priorities is much more responsive to political pressures than to scientific pressures. It is clear that researchers have h ' little representation in Phase I. Strong and Jarosik (1975, p. 6) note that in Phase II "leadership in vocational education tended not to have control of how research funds were to be spent," and offered the example of the use of those funds predominantly for career education. In fiscal 1972 and 1973 at the direction of Commissioner Marland, the Deputy Commissioner specified that vocational monies were to be spent for career education; thus he redirected money that could have been used to support program categories that were more specifically implied by the vocational education legislation.

The identification of particular priorities is partly dependent on the composition of the ad hoc groups that are convened during Phase I. The level of sophistication and particular interests of these groups can and do influence the priorities established. Hence, the people who convene them influence priorities, and there have been different conveners over the last ten years. Obviously, the use of ad hoc groups that change from year to year results in lack of stability in the research program. Concern has also been raised about the extensive participation of certain state leaders in setting federal priorities. A nationwide program of research should take state priorities into account, but it is not clear how great a role the states should have in setting federal priorities. Nor is it clear on what basis certain state leaders have been invited to participate.

The lack of stability in priorities has been perceived as detrimental by the vocational education researchers interviewed. A concern with short-term, product-oriented research, a lack of concern for long-term, pro-

grammatic studies, and a lack of emphasis on high-risk efforts that have promise of high payoff have characterized Part C priorities. Moreover, USOE itself reports that identification of new priorities takes precedence over continuation of last year's priorities, regardless of the probability of payoff from further effort toward a goal partly reached during the past year.

Policy Development

Both understaffing at USOE and frequent administrative shifts may account for the lack of long-range planning. Whatever the reason, policy decisions have not been derived in a consistent and systematic manner and often have been determined externally. The need for quick answers to pressing problems, changing goals with each new Commissioner of Education, and reaction to political pressures have tended to increase the emphasis on targeted, product-oriented priorities. Policy and decision making have generally not been influenced by past R&D activities, to continue research needed in some areas and to allow for learning from past R&D. Stronger and continuing national leadership in policy development is needed.

Awarding Grants and Contracts

Announcements The availability of funds and priorities for the federal halves of Parts C and D are announced in the *Federal Register*, which is sent to all state departments of education, RCUS, and others and is available nationally. Winning applicants are usually awarded grants, unless they are profit-making institutions. For Part I projects, requests for proposals (RFPs) for contract awards are announced in *Commerce Business Daily*, also available to all.

Some practitioners and researchers believe that the announcement of availability of funds in these publications is, in itself, discriminatory. Although the publications are distributed widely to departments of education and school districts, they are not available without charge. Small private organizations such as consulting firms and academic researchers can be especially handicapped. Moreover, simply keeping abreast of announcements and information in these publications is a time-consuming task that may be too expensive for some would-be applicants. In addition, the time for writing applications or proposals can be as short as two weeks once the announcement is located and discussed with collaborators; however, it is generally estimated that it takes four weeks to write a proposal and secure necessary local approvals.

Nearly all awards are made on a competitive basis and few proposals outside the stated priorities are funded. Because priorities change from year to year, researchers who want to follow a consistent plan of research over several years are likely to be denied an opportunity to compete on an equal footing for funds each year, regardless of the quality of their past work.

Announcements requesting grant applications or RFPs are essentially the only form of dissemination of information about proposed research used by USOE. Grant announcements and RFPs specify quite clearly what research USOE wants, including goals and methods of accomplishing these goals. This procedure requires that USOE have well-defined priorities, that USOE know exactly how the research should be planned and conducted, and, preferably, that the priorities adequately and accurately reflect the needs of vocational education. If announcements and RFPs are to be well-written and responsive to those needs, good communication must exist between USOE and vocational educators. In addition, USOE must be adequately staffed with competent vocational researchers or it must employ such researchers as consultants. The current limitations on salary and expense budgets prevent either of these options from being effectively implemented.

Review Procedures Proposals are reviewed by panels, usually composed of five people and chaired by the USOE Part C program chief. No more than three of the panel members can be federal employees, and they must be from outside the Division of Research and Demonstration. Hjelm and Boerrigter (1974, p. 43) specify:

> A typical panel will consist of two members being content specialists, one member being a design specialist, one member being an evaluation specialist, and a fifth member being an educator or user of the products of the R&D program. Attention is given to the geographical spread and the spread by type of institution of the non-federal reviewers. The panels are representative in terms of minority groups and women.

These often are not peer reviews (reviews by other vocational education researchers) like those often used in social science, physical science, and medical research. The review procedure is characterized by a tendency to fund projects at the lowest possible cost.

Award Recipients

Figure 1 shows the flow of vocational education R&D funds; the dollar figures are based on fiscal 1974 data. The agencies and institutions iden-

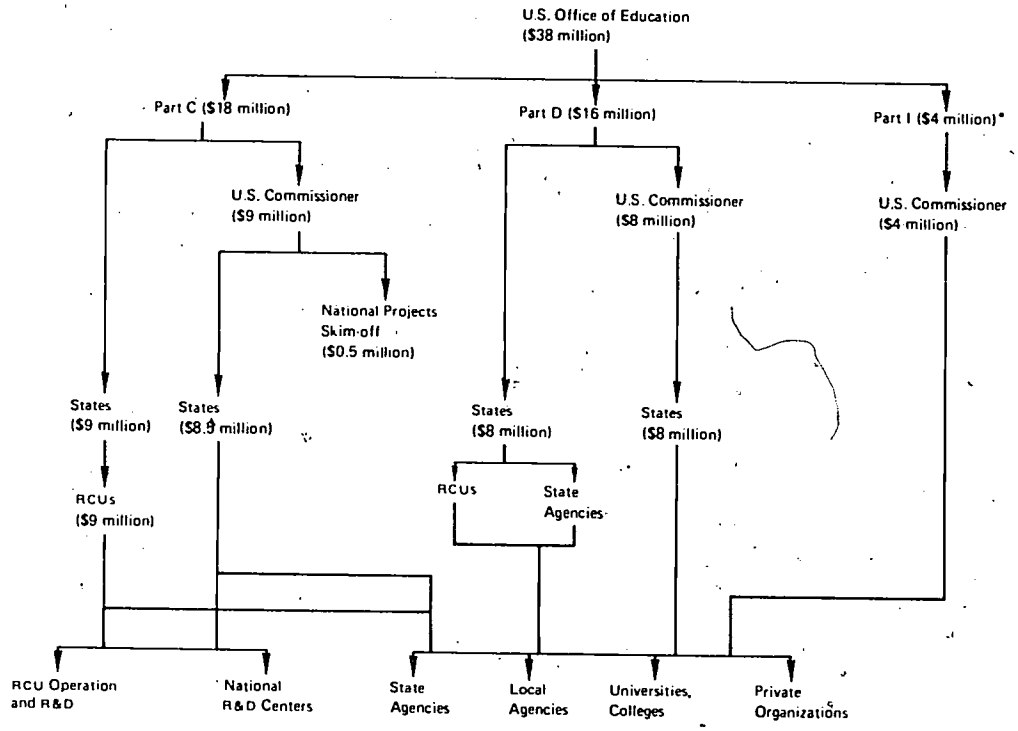

FIGURE 1 Actual flow of vocational education R&D funds (figures based on fiscal 1974 data).

tified in Figure 1 did not necessarily receive awards in every year of funding.

Section 4(c) and Part C The types of institutions that most frequently have received grants or contracts have varied from program to program and from time to time. Throughout the Section 4(c) program (up to 1969), colleges and universities predominated as award recipients, while in the Part C program (since 1971), there has been a greater percentage of state education agencies (SEAs) as grantees. In fiscal 1972 and 1973, all federal share Part C funds went to SEAs to support career education and experimental, developmental, and demonstration projects. Since the state half of Part C funds is awarded directly to SEAs, there has been extensive state control over research funds; in fiscal 1972 and fiscal 1973, SEAs received all Part C funds. Research awards are displayed by type of recipient for the Section 4(c), federal share Part C, and state share Part C programs in Tables 3, 4, and 5. It should be noted that in a few cases award recipients may not be the actual researchers because they may subcontract the work.

TABLE 3 Sample of 149 Research Awards by Recipient Institution, Section 4 (c)

	Percentage of Dollar Awards				
Fiscal Year	State Education Agencies	Local Education Agencies	Universities or Colleges	Private Nonprofit Institutions	Total
1965	22.8	–	65.8	11.2	99.8
1966	5.7	0.8	65.4	20.1	100.0
1967	10.6	1.3	78.6	9.3	99.8
1968	2.3	6.2	57.7	33.6	99.8
1969	8.3	5.5	76.6	9.4	99.8

TABLE 4 Research Awards by Recipient Institution, Federal Part C

	Percentage of Dollar Awards				
Fiscal Year	State Education Agencies	Local Education Agencies	Universities or Colleges	Private Institutions	Total
1971	1.9	–	43.3	54.8	100.0
1972	100.0	–	–	–	100.0
1973	100.0	–	–	–	100.0
1974	39.7	10.9	27.7	21.4	99.7

TABLE 5 Research Awards by Recipient Institution, State Part C

	Percentage of Projects				
Fiscal Year	Schools and State and Local Education Agencies	Universities or Colleges	Vo-Tech Schools	Other*	Total
1971	37.6	45.1	9.4	8.0	100.1
1972	38.6	41.0	10.2	10.2	100.0
1973	31.7	44.9	9.2	14.2	100.0

*Private organizations, individuals, state departments other than education, unknown or unclassifiable agencies.

Part D Because of the nature of the Part D program, the majority of the grants are made to local education agencies. Data collected by Development Associates (1975, p. 142) on the states' share of Part D indicate that over 80 percent of the grants made during the first three years were to local education agencies or schools, 16 percent were to universities or colleges, and only three percent were to SEAs. In many cases, federal share Part D funds were awarded to SEAs (see Table 6).

Part I Throughout the Part I program, a significant number of research projects have been conducted by private agencies (see Table 7). Many of these private agencies are private-for-profit: in fiscal 1972, 23 percent of all award recipients were private-for-profit; in fiscal 1973, 20.4 percent; and in fiscal 1974, 46.6 percent. (Data on percentage of nonprofit and for-profit agencies are not available for fiscal 1970 and 1971.) Universities or colleges also received a substantial portion of Part I funds.

TABLE 6 Research Awards by Recipient Institution, Federal Part D

	Percentage of Projects				
Funding Round	State Education Agencies	Local Education Agencies	Universities or Colleges	Other*	Total
1st (fiscal 1970-73)	23.1	63.1	4.6	9.2	100.0
2nd (fiscal 1974-76)	34.6	59.6	5.8	.0	100.0

*Private organizations, individuals, state departments other than education, unknown or unclassifiable agencies.

TABLE 7 Research Awards by Recipient Institutions, Part I

	Percentage of Dollar Awards				
Fiscal Year	State Education Agencies	Local Education Agencies	Universities or Colleges	Private Agencies	Total
1970	4.6	1.4	33.6	60.4	100.0
1971	41.8	2.5	21.5	34.2	100.0
1972	21.7	0.6	31.3	46.4	100.0
1973	22.7	3.9	47.9	25.4	99.9
1974	0	0	16.0	84.0	100.0

Project Directors Data on the sex of project directors have been collected for Section 4(c), federal Part C, and Part I programs. Tables 8 and 9 display project awards for these programs by sex of project directors. There seems to be a random fluctuation in the rate of female participation in the Section 4(c) and Part C programs, with a ten-year average of 8.3 percent. Under Part I, female project directors outnumbered males in one year (fiscal 1974), possibly due to a large curriculum project awarded to the American Home Economics Association (see Table 8). Data on the ethnic minority representation among project directors are not available.

TABLE 8 Section 4 (c) and Federal Share Part C Project Directors by Sex

Fiscal Year	Males	Females	Total	N
Section 4 (c)				
1965	79.3%	20.7%	100.0%	29
1966	88.9	11.1	100.0	45
1967	100.0	0	100.0	22
1968	95.0	5.0	100.0	20
1969	91.0	9.0	100.0	33
Part C				
1970	0	0	0	0
1971	100.0	0	100.0	33
1972	89.9	10.1	100.0	92†
1973*	–	–	–	–
1974	89.8	10.2	100.0	98‡

*No data available.
†3 projects had two co-directors.
‡5 projects had two co-directors.

TABLE 9 Part I Project Directors by Sex

Fiscal Year	Male	Female	Unknown	Total
1972	25	1	2	28
1973	9	3	1	13
1974	8	10	0	18
TOTAL	42 (71.9%)	14 (23.7%)	3 (5.1%)	59 (100%)

NOTE: Only new starts are included.

Monitoring and Evaluating Projects

Monitoring ongoing grants and contracts is seen as an important function by USOE in an effort to ensure adequate benefits from the expenditure of taxpayers' money. In practice, however, limited numbers of staff and insufficient funds for travel prevent USOE from doing as much monitoring as it thinks desirable. In general, contracts require closer monitoring than do grants.

The Office of Education has only infrequently required evaluation to be a component of R&D projects. (In fiscal 1972 and 1973, career education projects funded under Part C were required to have third-party evaluations.) Instead, USOE has awarded contracts to three groups—Development Associates, Inc., Project Baseline, and this Committee—to perform post hoc evaluations of the Parts C, D, and I programs. All three groups have faced difficulties because evaluation was not given early consideration in the design and conduct of most R&D projects. Therefore, criteria for "success" and desired outcomes were not defined at the outset of each project, and projects did not keep complete records that would allow post hoc measurement and evaluation of outcomes.

In addition, evaluation of the quality of research performance has been missing. There is essentially neither a quality control procedure nor a mechanism to ensure that research performers who have done unsatisfactory work in the past will not be awarded grants or contracts in the future.

Dissemination

The Office of Education relies heavily on written reports for the dissemination of R&D products. Abstracts of completed projects are published in a periodic USOE report and are sent to Abstracts of Instructional and

Research Materials (AIM/ARM) and the Science Information Exchange of the Smithsonian Institution. Final reports are sent to Educational Resources Information Center (ERIC) and AIM/ARM. Beginning in 1975, information about Part D projects funded by USOE and NIE will be compiled into an annual report. USOE believes commercial publication to be the most effective means of disseminating curriculum materials and, therefore, encourages Part I project directors to seek such publication. However, the curricula developed are often highly specialized and the market is considered to be speculative because of the Part I focus on new occupations. Therefore, it is often impossible to secure commercial publication for these materials.

The view of dissemination currently most popular among educators and social science researchers involves two principles:

1. To be effective, dissemination must be planned at the outset of a research project.
2. Dissemination modes must be flexible and must take into account the varied needs of the audiences addressed.

However, USOE does not routinely require that researchers and developers carefully consider the appropriate means of disseminating the results of R&D efforts before a project is completed. (The National Network for Curriculum Coordination and the state RCUs were established partly to aid in dissemination of R&D projects. These institutions are discussed later in this chapter.)

NATIONAL VOCATIONAL EDUCATION R&D CENTERS

In 1965, USOE established a series of national and regional R&D institutions to respond to specific substantive needs in education. The Division of Vocational and Technical Education established institutions related to vocational education: an RCU in each state, two national R&D centers, and four research development units. Due to funding reductions, the four research development units have been phased out; the other institutions still exist but receive little funding from USOE.

The two R&D centers are the Center for Vocational Education at the Ohio State University and the Center for Occupational Education at North Carolina State University. Both were funded initially under Section 4(c) and are now supported by several sources on a project-purchase basis. Each center stresses slightly different aspects of R&D. At present, the Ohio Center is much larger than the North Carolina Center.

The North Carolina Center was established in 1965 to serve 14 southern states. Its expressed mission is to provide a national resource for policy analysis and development: (1) to inform constituency groups of issues that may affect vocational education; (2) to assist federal agencies in working with others in policy development; and (3) to respond quickly to questions of vocational education policy. It also provides technical assistance. This Center stresses a multidisciplinary approach to R&D in vocational education.

The mission of the Ohio Center is "to increase the ability of diverse agencies, institutions, and organizations to solve educational problems relating to individual career planning and preparation." In order to fulfill its mission, the Center conducts national programs and projects related to six objectives (Council for Educational Development and Research, Inc., p. 38):

1. Generating knowledge through research
2. Developing educational programs and products
3. Evaluating individual program needs and outcomes
4. Installing educational programs and products
5. Operating information systems and services
6. Conducting leadership development and training programs.

Whenever possible, the Center undertakes multi-year endeavors that address national priorities.

The two national Centers received general institutional support from USOE until fiscal 1972 when they were transferred to NIE, which established a project-purchase policy. They currently receive grant and contract awards for R&D projects from NIE, USOE, SEAs, local school districts, and business and industry. The project-by-project funding focuses the Centers' efforts on short-term, product-oriented research.

Both Centers usually receive grants from the Commissioner's share of Part C. Although the Centers study problems of regional and national scope, these awards are charged against the Ohio and North Carolina state allotments of the Commissioner's share; this penalizes both the states and the Centers and can strain the working relationship between a Center and the state in which it is located.

NATIONAL ADVISORY COUNCIL ON VOCATIONAL EDUCATION

The National Advisory Council on Vocational Education (NACVE) was established by the 1968 Amendments, which authorize funds for its sup-

port. It consists of 21 members appointed by the President for terms of three years. The legislation specifies that the members be representative of labor and management as well as of the general public. They should also be familiar with manpower problems and the administration of manpower programs, the administration of state and local vocational education programs, the training of the handicapped and disadvantaged, and post-secondary and adult education. NACVE's three tasks, set forth in the 1968 Amendments [Sec. 104(a)(2)], are to:

(A) advise the Commissioner concerning the administration of, preparation of, general regulations for, and operations of, vocational education programs supported with assistance under this title;

(B) review the administration and operation of vocational education programs under this title, including the effectiveness of such programs in meeting the purposes for which they are established and operated, make recommendations with respect thereto, and make annual reports of its findings and recommendations (including recommendations for changes in the provisions of this title) to the Secretary for transmittal to the Congress; and

(C) conduct independent evaluations of programs carried out under this title and publish and distribute the results thereof.

NACVE has a research committee that commissions research and evaluation activities and informs the Council of state vocational education research work. The research committee is concerned primarily with the second and third tasks listed above. Indicating NACVE's interest in R&D, in April 1975 Roman Pucinski testified for NACVE before the House Subcommittee on Elementary, Secondary, and Vocational Education. Pucinski suggested that a major portion of federal funds for vocational education should be used for supporting innovative programs.

NATIONAL DISSEMINATION SYSTEMS

There are two national dissemination systems supported by federal funds for vocational education. One is the ERIC Clearinghouse in Career Education (ERIC/CICE), supported by Central ERIC at NIE; the other is AIM/ARM, supported by USOE.

ERIC/CICE was preceded by the ERIC Clearinghouse in Vocational and Technical Education (VT-ERIC), which was originally established at the Ohio Center in 1966. VT-ERIC was the first clearinghouse in the ERIC system to: (1) develop information analysis products; (2) partition the ERIC file; (3) engage in dissemination activities; (4) computerize its own

file; (5) conduct user studies; (6) develop a user training package; and (7) develop supplementary abstract publications (AIM/ARM). The Clearinghouse benefited from the resources and contacts of the Ohio Center: a research library; a large, interdisciplinary staff of vocational education R&D specialists; a research program on dissemination; and links to the vocational education community.

For 1966-68, VT-ERIC was totally supported with vocational education funds authorized by the 1968 Amendments at about $300,000 per year. In 1969, Central ERIC funded the Clearinghouse at reduced levels and, for the next few years, funding ranged from $175,000 to $240,000 per year. Another cut in funding came when Central ERIC, which had moved to NIE in 1973, merged VT-ERIC and the Adult and Continuing Education ERIC Clearinghouse at Syracuse University into a new clearinghouse, ERIC/CICE at Northern Illinois University. The contract awarded was for about $152,000, far less than the previous year's funding for VT-ERIC and about one half of the combined funding for the two displaced clearinghouses.

Lacking experience in clearinghouse operation and limited by inadequate funding, ERIC/CICE could not continue the activities of VT-ERIC. Central ERIC had drastically curtailed information analysis at clearinghouses and discontinued support for local clearinghouse collections. ERIC/CICE has not developed a comprehensive information resource system for vocational education even though it has received increased funding from NIE in recent years. Its principal emphasis has been upon acquisitions of research reports, input to *Resources in Education*, and computer searches of the ERIC files.

Many potential users of vocational education research products have not been totally satisfied with the ERIC system. At the summer 1975 meeting of the six curriculum centers, the two principal complaints against ERIC raised by participants were the time delay (about six months) before materials submitted to ERIC are accessible, and the screening performed by ERIC. In many cases, states want immediate access to all curricula, however. Other criticisms of the ERIC system are that it takes too long for requests to be filled and that it is difficult to work with microfiche.

Because of curtailed ERIC clearinghouse services, in 1974 BOAE decided to continue support of AIM/ARM as a project. AIM/ARM had been conceived originally as an ERIC-compatible, supplementary publication providing comprehensive coverage of research and instructional materials for the vocational education audience. With its new project status, AIM/ARM had the additional responsibility of reporting projects in progress, conducting literature searches for BOAE, supplying bibliographies in

support of solicitations for Parts C and D project applications, developing interpretative papers, and consulting with dissemination network components.

AIM/ARM's bimonthly publication, *Abstracts of Instructional and Research Materials*, includes sections entitled:

Instructional Materials Abstracts
Instructional Materials Subject Index
Research Materials Abstracts
Research Materials Subject Index
Curriculum Development Projects in Progress
Research Projects in Progress

The projects-in-progress sections announce current activities funded under the 1968 Amendments. In addition to the bimonthly publication, AIM/ARM products include (Magisos 1975):

Annual indexes to AIM/ARM
Computer search tapes, including summaries of at least 16,000 documents.
Microfiche of research documents and products
Information searches for the sponsor
Interpretative papers
Consultation with affiliates in the linked information dissemination network
Repackaged indexes to instructional materials
Pilot testing of state information dissemination services
Training workshops for information specialists
Development of a guide to operating information dissemination systems and a guide to existent information resources
User training and development of user training materials.

To some extent, AIM/ARM overlaps with ERIC/CICE. Neither is a complete information and retrieval facility, and both omit certain classes of information for reasons other than quality. However, to the extent that they are utilized, both systems serve to provide the vocational education community with completed and in-progress instructional and research materials. The state RCUs and regional curriculum centers (discussed below) help to feed information into these systems, encourage more widespread use, and disseminate microfiche to requesters.

REGIONAL ORGANIZATIONS

NATIONAL NETWORK FOR CURRICULUM COORDINATION

The National Network for Curriculum Coordination in Vocational and Technical Education is made up of six regional centers. It was established by USOE in June 1972 with five centers, after 30 states responded to the initial RFP; in June 1973 two other centers were added. One year later the seventh center was discontinued because of lack of funds, and the states were regrouped into six regions more nearly consistent with the ten USOE regions. The National Network is supported under Part I; current funding is about $40,000 per year per center.

Originally, there was dual motivation for funding the centers: to improve the curriculum management capabilities of states and to put curriculum development and management in the context of career education (Simpson 1975, p. 23). Secondary goals were to improve communication among states, especially among neighboring states, to enhance coordination in reducing duplication of effort, and to promote cooperation in developing, validating, evaluating, disseminating, and installing curricula.

In a statement prepared by USOE for Congressional oversight hearings in the spring of 1974, four primary purposes of the National Network were outlined:

- Information sharing: to provide a mechanism for the sharing of information on curriculum materials available and under development, and for reporting on coordination efforts.
- Standards: to develop and recommend guidelines for curricula and curriculum development with the ultimate goal of increasing the effectiveness of curriculum materials and enhancing their transportability.
- Curriculum needs, as a basis for planning: to establish and maintain a system for determining curriculum needs in vocational-technical education and reporting conclusions to the field.
- Coordination: to coordinate activities in curriculum development dissemination and utilization with the aim of avoiding unwarranted duplication, enhancing quality of effort, increasing the transportability of curriculum materials, and improving the acceptance and use of curriculum materials.

Curriculum development is viewed by the National Network as distinct and separate from the rest of R&D. Communication between curric-

ulum developers and other researchers is not presently one of the National Network goals. It is important to note that Part C functions overlap considerably with the functions of the National Network centers.

Each center is presently staffed at a marginal level and operates as best it can under the circumstances, but the centers' efforts are fragmented and isolated. The centers duplicate some of the work of ERIC and AIM/ARM, in part because they are not satisfied with these services. Their efforts at dissemination are neither as far reaching nor as concentrated as might be desired. Their efforts at evaluating their dissemination work have been severely hampered and sometimes eliminated because of lack of funds. Although the centers are organized along USOE regional lines, there is no evidence that geographic differences in curricula are larger than the similarities or that the differences that do exist are related to variability among USOE regions. Because regions lack the revenue base of either local or state government, it is not possible for the centers to obtain a multiplier effect (matching federal funds with state or local money). There is no apparent reason for regionalization of curriculum development efforts.

STATE ORGANIZATIONS

On the state level, institutions involved in the vocational education R&D program are concerned primarily with the states' share of Parts C and D funds. These institutions are the SEAs (which may be called state education agencies or state departments of education), state departments of vocational education, which may or may not be part of the SEAs, RCUs, and state advisory councils on vocational education.

Vocational education R&D programs vary greatly by state, reflecting factors such as the amount of allotments from USOE, the amount of local and state matching funds, the scope and function of the RCUs, the administrative structure, and the state's philosophy toward research. State appropriations to match Parts C and D funds vary widely. In most states, Parts C and D funds are not matched equally by state funds. Small states receive very small Parts C and D allotments and seem to be uniformly unable to provide sufficient state revenue to have enough money for productive vocational education R&D. RCUs, which play a key role in states' research programs, usually function as a branch of the state vocational education department, but in a few states they are located at and partly funded by a university or are part of a more general educational research operation in the SEA.

RESEARCH COORDINATING UNITS

All RCUs administer their states' share of Part C research funds. Part C funds pay up to 75 percent of the costs of operating the RCU and up to 90 percent of the costs of R&D grants and contracts. Some states support the operations of their RCUs with state funds and use the Part C funds to expand the research effort within the state; other states supply only the required matching.

In addition to managing Part C funds, RCU functions include setting research priorities, coordinating state R&D efforts, and disseminating R&D results and products. In some states, the RCUs play a large part in conducting research; in other states, research funds are awarded to individuals, local education agencies, and other organizations that conduct Part C research. In addition, RCUs have the potential to form a national network and link the national, state, and local levels of the R&D program.

Usually, RCUs set research priorities with the approval of the state director of vocational education. About half of the ten RCUs visited by the staff (see Appendix B) claim to consider the federal priorities for the Commissioner's projects in setting their own state priorities, but some RCU directors believe that federal priorities change too frequently. The ten RCUs sampled review their priorities annually, some using a more highly refined process than others. Most gather input from teachers and state and local administrators and sometimes from lay or labor people. A few RCUs use management by objective and therefore stress measurable goals and objectives under their priorities. They believe that this is a good way of ensuring that state priorities will be addressed and of assessing the progress of projects done by either the RCU or other researchers.

In awarding grants and contracts for Part C, there is considerable variability in the use of RFPs. (In a few RCUs, all research is in-house; consequently, they do not use RFPs.) Some RCUs use some form of announcement, usually not as formal or as structured as the federal RFP. There is some hesitancy to use RFPs, partly because it is difficult to write them. Perhaps even more important is that RFPs require researchers to prepare lengthy proposals without any guarantee of being funded, and this is thought to waste time and energy and to alienate the research community.

All but two of the ten RCUs visited fund researcher-initiated proposals, although some RCUs require that these projects fit within the state priorities. In one small state where communication between the RCU and researchers is excellent, all projects result from such proposals. Half of the states surveyed use sole-source awards to some extent. Usually they are

used for specific ideas judged by the RCU to be important and most appropriately handled by one well-known performer. Minigrants (awards of approximately $5,000 or less) are frequently awarded to teachers or schools because they seem to generate interest and enthusiasm and result in substantial informal matching of funds or services from the school or locality. However, two states visited do not use minigrants because of the high administrative costs involved.

A common problem faced by the RCUs in making awards is the time lag between federal appropriations and obligations. According to some RCU directors, the uncertainty of funding is a factor that influences the use of RFPs, the quality of proposals, and even the quality of projects funded. Some RCUs have additional uncertainties with regard to state support, which further handicaps planning.

In some states RCUS take on additional functions such as training research personnel, developing a management information system, and maintaining a research information clearinghouse. For those RCUs with little in-house research, typical activities include providing technical assistance to both producers and consumers of research products and monitoring ongoing projects.

In about half the states, RCUs also manage projects funded by Part D, while in the other states a separate section within the state department of vocational education or the SEA administers Part D. While almost all SEAS (or RCUS within SEAS) monitor Part D projects, the extent of their involvement varies widely. Data collected by Development Associates, Inc. (1975) indicated that in 20 states, Part D project sites were visited at least monthly; in 22 states, they were visited three or more times per year; in seven states, one or two times per year; and in one state, as needed.

The amount of coordination between Parts C and D is closely related to whether or not the two parts are administered by the same agency. When Part D is administered by a separate section within the SEA and not by the RCU, communication problems between the SEA and the RCU seem frequently to inhibit coordination between the two programs. These problems are more acute when the SEA staff shows a lack of receptivity to research.

Dissemination activities, although variable in type, are carried out to some extent by all RCUS. In all but one of the ten states visited, final reports are required of every project and some of these reports are eventually included in the ERIC dissemination system. Most of the RCUs have ERIC collections with computer retrieval systems, and microfiche is available upon request.

Beyond involvement with ERIC, RCU dissemination efforts vary considerably. Dissemination in about half of the states visited is geared primarily to requests for information. All but three states prepare abstracts of projects done in their states in addition to microfiche of final reports. The abstracts are usually available upon request and, in some states, are distributed routinely to a selected audience. In one state, each request for information is handled individually and copies of searches are not kept for future use. Other states answer some requests with information gathered for earlier requests. The former method has a personal touch and is felt to increase the interest of users; the latter approach is less costly and probably less time-consuming.

Other RCUs take the initiative in circulating information. Several send out newsletters or journals that announce the availability of research products. Less common vehicles for dissemination are personal contacts through workshops, demonstration sites, in-service training, and regional centers. It is generally felt that personal contact is the most effective dissemination technique, particularly since many potential users are unfamiliar with research processes, research methodologies, and the use of microfiche. Personal contact as a means of dissemination is widely recognized as very expensive and time-consuming for RCUs with relatively limited budgets and few staff.

STATE DEPARTMENTS OF VOCATIONAL EDUCATION

Each year the state boards of vocational education, in conjunction with the state advisory councils, develop state plans for vocational education as specified in the 1968 Amendments. These plans, which identify both annual and long-range objectives, focus primarily on instructional programs, but they include R&D as well. The plans are submitted to USOE and must be approved before a state can receive any money under the 1968 Amendments.

In addition to their involvement with the states' share of Parts C and D, state departments of vocational education review and approve proposals from local education agencies for federal Part C awards. In many cases, they even assist in the writing of those proposals. In fiscal 1975, the SEAs were also asked to review all proposals submitted from their state and to advise USOE of any duplications. Since SEAs are also eligible to receive discretionary awards, there may be a conflict of interest in this SEA function. Some SEAs avoid this problem by choosing not to compete for discretionary federal money or by approving all proposals from local education agencies that are submitted to them.

STATE ADVISORY COUNCILS ON VOCATIONAL EDUCATION

The state advisory councils on vocational education (SACVES) are involved in planning with regard to the states' share of Parts C and D. Functioning autonomously, the councils are responsible for evaluating the effectiveness of state and local vocational education programs in terms of the goals and objectives outlined in the state plans. Recommendations for change resulting from state evaluations, contained in annual evaluation reports, are sent to the National Advisory Council on Vocational Education, USOE, the particular state board of vocational education, and other state agencies. The relationships of the SACVES to RCUS differ widely. For example, among the sample of ten states visited, five SACVES advise the RCUS on research priorities and read and react to research proposals. In the other five states, the SACVES do not do so and are not seen by the RCUS as being very helpful to them.

SACVES vary considerably in the size of their budgets. Those SACVES whose budgets provide for more than a minimal staff are frequently involved in supporting research to aid their evaluative functions. For example, Illinois had funded 25 projects and Texas had funded 17 projects as of June 1975. Most projects were funded by the annual federal allotment for SACVES, but the availability of state funds for other SACVE activities frees federal monies for SACVE research and evaluative activities.

DISSEMINATION AND UTILIZATION

Dissemination and utilization activities have been inadequate for vocational education R&D to have had measurable impact. After R&D projects are completed, final reports are usually prepared (as required by USOE), the required number of copies are supplied to USOE, and some distribution is made. Reports are then entered in the vocational education information storage and retrieval systems (ERIC and AIM/ARM) and occasionally reviewed or mentioned in other publications. Although a wide variety of techniques for dissemination have been developed, widespread dissemination is rare, and little attention has been given to increasing the use or adoption of disseminated products. Systematic identification of target audiences and packaging of information to meet the needs of different audiences have been lacking. Joseph F. Blake (1975, p. 25) identified some special needs:

> The practitioner groups need information for policy decisions and program development. The researcher-developer group needs information about completed

and on-going work to avoid duplication and to benefit by existent knowledge. Among these groups the need is for collection and processing of materials accessible and available on a continuing stable basis. They need a system searchable through different levels of sophistication and capable of providing repackaged and digestible versions for special target audiences.

There is little documentation of the utilization of R&D products and frequent failure to distinguish between dissemination and utilization. Existing documentation of utilization is questionable because it often does not really measure the actual adoption of products, but rather the extent to which products have been disseminated. For example, some states document "utilization" by keeping records of requests for microfiche copies of research reports. There is apparent difficulty in identifying utilization of the results of information-seeking research as well as utilization of the products of development-oriented research. For example, it is difficult to determine if the new information gained by a certain research activity was considered in the decision-making process that resulted in a certain change.

Blake (1975, p. 52) identifies some of the present problems in improving utilization by practitioners:

- Many practitioners do not understand how R&D can help them deal with their daily problems.
- Many practitioners need help in identifying, locating, and acquiring potentially useful materials.
- Practitioners need more information or help to determine the probable utility, reliability, or validity of R&D products and results.
- Many practitioners need help in interpreting and applying the findings of research reports.

At present, many administrative agencies have some responsibility for dissemination, yet the vast majority of R&D products and results are not widely disseminated, and there is no systematic way of determining which ones should be disseminated. It is not clear which level of project administration (federal, regional, state, or local) has or should have primary responsibility for encouraging practitioner utilization of R&D products and results.

CONCLUSIONS AND RECOMMENDATIONS

The following conclusions and recommendations in this section are based on the information presented above on the administration of the

vocational education R&D program. The Committee recommends changes in only the functions and institutions that are most important to the vocational education R&D program. These conclusions and recommendations are organized differently from the descriptive material above; they are grouped into four categories: program structure, program planning and administration, institutions involved in the R&D program, and dissemination and utilization.

PROGRAM STRUCTURE

Consolidation and Use of Parts C, D, and I of the Vocational Education R&D Program

Conclusion The results of research funded under Part C have not been fully used as a basis for developing curriculum products under Part I and designing demonstrations under Part D. The lack of coordination and the separate setting of priorities among Parts C, D, and I have reduced the potential for a cumulative impact of the R&D program. In addition, there has been some overlap in the activities funded under the separate Parts, due in part to legislative mandate.

At the state level, the points at which the Committee was able to find links between Parts C and D were in states in which both programs were administered by the RCU. In some states there is virtually no communication between the Part C program administered by the RCU and the Part D program administered by a division within the SEA.

Recommendation Without reducing the overall appropriation, the Congress should change existing legislation to provide that the vocational education R&D programs be consolidated. In addition, the legislation should mandate that not less than 20 percent be allocated for research, defined as scientific inquiry designed to generate new knowledge.

Research, development, demonstration, dissemination, and evaluation are related elements of the same R&D system and belong together for purposes of administration, coordination, and communication. R&D products resulting from research programs should be considered in defining some of the priorities for demonstration and curriculum development. Unexpected results from demonstration and curriculum development should be further studied by researchers. Results from research, development, and demonstration projects should be considered in setting priorities for R&D and should be used in the training of vocational education personnel.

Administrative Location

Conclusion Rapid shifts in policies and goals of the vocational education R&D program are due in part to frequently changing administrators. Further, the three parts of the R&D program have been shifted and reorganized within USOE, fragmenting the total effort and, at times, removing research from its proximity to the operating unit for vocational education, the Bureau of Occupational and Adult Education.

Recommendation The Committee recommends to Congress, the Secretary of HEW, and the Commissioner of Education that the research, demonstration, and curriculum development parts of the vocational education R&D program (Parts C, D, and I) continue to be administratively located within the Bureau of Occupational and Adult Education in USOE in order to help ensure stability of planning and to facilitate coordination of research with program operations.

Commissioner's Share of Funds

Conclusion Because both the Commissioner's (federal) half and states' half of Parts C and D funds are distributed to states on a formula basis, SEAs have received a sizable portion of vocational education R&D funds, and problems of multi-state or national scope have not received adequate attention.

Recommendation Congress should designate 50 percent of all vocational education R&D funds (Parts C, D, and I) as the Commissioner's share, reserved for attempts to solve national or multi-state problems; these funds should not be subject to state formula allocations.

Career Education

Conclusion Career education has been supported heavily with vocational education R&D funds since 1971, and activities supported with these funds have contributed materially to the development of career education. Career education is a broad concept in which vocational education plays an important role. However, there are major conceptual differences in their programs.

Recommendation The Congress should authorize separate funding for career education R&D and vocational education R&D. The Commissioner

of Education should articulate or integrate, as appropriate, career education and vocational education R&D.

PROGRAM PLANNING AND ADMINISTRATION

Procedures for Setting Priorities

Conclusion There has not been a long-term, scientifically based schedule of national priorities for the support of research, demonstration, and curriculum development. Only one research topic, guidance and counseling, has been included in the list of research (Part C) priorities each year of the past decade. Some research topics have appeared as priorities once or twice during the past ten years, and some important research topics have never appeared as priorities. During two years, fiscal 1972 and fiscal 1973, there was only one designated research priority—career education, with an emphasis on guidance and counseling. There appears to be no rational or empirical basis for the inclusion, exclusion, or repetition of particular priorities. While priorities are established through suggestions from vocational educators and administrators, rarely have researchers been adequately represented in the process of setting priorities. Those involved in vocational education R&D have not been informed about the process and have no formal means for participating in it.

State priorities for research and related activities are often determined administratively without any involvement of research producers and consumers in the state. In many states there appears to be no formal procedure for setting priorities.

Recommendation A systematic, open, cumulative, and data-based process should be initiated by the Commissioner of Education for identifying national priorities for vocational education R&D and by the state directors of vocational education for identifying state priorities. The process should involve advisory groups at both national and state levels that represent the clients of vocational education, including students, employees and employers, and professionals in vocational education. More input from researchers is necessary to determine what R&D is feasible from a scientific viewpoint and to identify the most appropriate mode of working on each problem and the most productive sequence of working on different problems. Terms of advisory group members should be sufficiently long and overlapping to allow setting priorities that are long-term and programmatic as well as those that address problems requiring a more immediate response. Priorities should be reviewed and updated

annually. The process should be well-publicized so that those who want to participate can do so. The process should also use the cumulative data base developed by management information systems.

Administration of Awards

Conclusion The availability of the Commissioner's share of federal funds for vocational education R&D projects has been advertised as RFPs in the *Commerce Business Daily* and as grant competition announcements in the *Federal Register*. Awards for Parts C and D are distributed according to a state formula, and applications (or proposals) are subject to veto by state directors of vocational education if the directors judge them to be duplicative. Using only RFPs, especially when further restrictions are imposed by state veto, does not adequately allow or encourage researchers with an exceptional idea outside the announced research priority areas to submit proposals or applications.

In some states, the states' share of federal funds for R&D is allocated primarily for the study of state administrative problems. In other states, priorities for allocating resources are determined solely by administrators (state directors of vocational education or RCU directors). Some states announce priorities and issue RFPs or announcements of award competitions. Only a few states follow procurement policies that permit open competition in response to state priorities determined through open procedures.

Recommendation A broad mix of announcements and funding procedures should be used by the Commissioner of Education and the state directors of vocational education. The appropriateness of contracts, grants, or sole-source funding will vary with the nature of each project and the general availability and interest of competent researchers. It should be recognized that field-initiated applications and proposals that are not in response to contract or grant announcements also have advantages. In the interest of encouraging innovation, a portion of R&D funds should be reserved for good proposals or applications that do not address federal or state priorities or are not in response to RFPs.

In order to accommodate the variable capacity of contenders to produce proposals rapidly, USOE and the states should allow potential applicants at least two months to respond to the announcements of all competitions for federal research funds. A pre-announcement of the date on which a grant competition is to appear may be useful. USOE and the states should also experiment with a two-phase announcement process: in the first phase, an initial announcement would solicit project prospecti;

in the second phase, those applicants whose projects are considered promising would be encouraged to develop full proposals.

The Role of Women and Minorities in Research Activity

Conclusion Women have been involved as researchers in vocational education far less often than men. There are virtually no data on the involvement of minorities in R&D projects. Further, vocational education researchers have not taken into account research on perceptions held by different groups within society concerning the acquisition of desirable skills, role performance, and attitudes toward time and work.

Recommendation The Commissioner of Education and state directors of vocational education should ensure that researchers and administrators representative of population subgroups (women and minorities) are involved in the R&D program. All RFPs and announcements of research opportunities should state that women and minorities as well as others are encouraged to apply. In addition, for the purpose of ascertaining trends in the participation of various population subgroups in vocational education research activities, the Commissioner and the state directors should keep annual status reports on the percentage of R&D project directors who are members of various population subgroups. The Commissioner should also encourage the involvement of researchers from population subgroups in R&D concerning those subgroups. Funds for training personnel should be used to build the R&D capacity of these groups. It should be determined how data on cultural differences can be used to create opportunities for equitable access to vocational programs and jobs.

Management Information System

Conclusion USOE does not have an efficient system for collecting and recording information on many aspects of the vocational education R&D program. Little information on research performers is collected; records of project impact are not usually kept; and those project evaluations that have been done have rarely been analyzed in depth and used to improve programs. Moreover, as in any research program, not all project directors submit interim and final reports. Therefore, it is extremely difficult to measure the impact that R&D projects have had on vocational education. There is essentially no evidence of quality control of research performance to ensure that the quality of past work of researchers affects the probability that they will receive awards in the future. There is no

system for collecting information on the research needs of vocational educators or on unnecessary duplication of research projects. In addition, there is no way to determine whether or not isolated charges of duplication of effort are accurate.

Some states rely heavily on management information systems while others lack systems for information collection and use. The extensiveness of monitoring and evaluating activities and the extent to which systems are dynamic and interactive also vary greatly among states.

Recommendation The Commissioner of Education should provide for the development and operation of a national management information system for vocational education R&D. Such a system should include data for monitoring and evaluating projects, measuring dissemination and utilization of project results, keeping track of the quality of research performance, and maintaining records of the characteristics of the research program (including data on research performers, institutional affiliation of award recipients, type of projects funded, and amount awarded to each state). Analysis of these data would help USOE identify factors that are critical in determining success or usefulness of R&D projects. The development of state management information systems should also be encouraged by state directors of vocational education.

An important function of a management information system for R&D would be to provide a systematic means for collecting information on the needs of vocational educators. At the same time, topics that have received repeated and duplicative attention could be identified and unnecessary duplication eliminated.

INSTITUTIONS

National Vocational Education R&D Centers

Conclusion The national vocational education R&D centers serve useful and essential functions. The centers have increased the research capability of vocational education and have studied topics of national importance. They have considerable potential for filling the present need for national leadership in policy making for vocational education R&D. However, the centers must seek support by pursuing contracts and grants on a project-purchase basis from diverse agencies. Thus, only in scattered instances have they been able to devote themselves to long-range vocational education projects of national importance. In addition, the centers are forced to compete with agencies within their states for Part C funds. This has tended to impair the relationship between the centers and the vocational education communities within their states.

Recommendation Congress, the Secretary of HEW, and the Commissioner of Education should ensure that there is at least one adequately funded national vocational education R&D center. The national R&D effort in vocational education needs continuity, from setting priorities to the use of validated results. The efforts would be enhanced by comprehensiveness that goes beyond that normally achieved in single, unrelated projects. Variety and quality of work would be increased through the operation of two or three national R&D centers. The center(s) should receive support from federal vocational education funds, including adequate resources for activities initiated by the centers.

The center(s) should address priorities that meet primarily national or multi-state (as opposed to state or local) needs and should build R&D capacity. However, they should also be free to contract with any state or locality to provide needed services so long as these do not interfere with the primary task of meeting national and multi-state needs. The center(s) should aid in planning and policy development for the national vocational education R&D system, including providing USOE and states with data needed for planning. USOE should view the center(s) as the appropriate place for conducting high-risk research where the payoff may be high. The center(s) should communicate with the research operations within each state; they should assist in dissemination of research products and in the training necessary for carrying out R&D activities. To increase the relevance of research, practitioners (teachers, counselors, etc.) should be involved in center operations, including planning, policy decisions, and improving dissemination capacity. There should be funding to allow practitioners to work with center(s), through means such as grants and summer institutes.

Curriculum Centers

Conclusion The National Network for Curriculum Coordination in Vocational and Technical Education funded by Part I has received less than adequate federal financial support for its intended activities. It is a regional effort, but the only regional financial support that is available comes through voluntary cooperation of groups of states; in only rare instances have groups of states contributed the necessary finances. Consequently, the efforts of the network have been fragmented and ineffective. Further, the centers are duplicating some of the functions of a comprehensive information system as well as some Part C functions usually performed by RCUs. There is no apparent reason for separating the coordination and dissemination of curriculum development products from that of other R&D products.

Recommendation The Commissioner of Education should require that the following curriculum coordination functions be performed: (1) identifying common curriculum needs among states; (2) encouraging local practitioners to become involved in curriculum development; (3) feeding curriculum information for the states into ERIC and AIM/ARM; (4) performing curriculum searches of these systems for vocational educators; (5) improving techniques for curriculum development, and (6) discouraging unnecessary duplication in curriculum development. Since curriculum development is very expensive, eliminating unnecessary duplication is economically desirable.

If adequate funding for the Curriculum Center Network cannot be provided, the Network should be disbanded and the functions should be assumed by the national vocational education R&D center(s). The R&D center(s) should receive additional funding, which would probably be less than that needed to support separate institutions partly because of economies of scale.

Research Coordinating Units

Conclusion RCUs vary widely in organization, function, and effectiveness. All RCUs have attempted to stimulate state and local interest in the R&D process and disseminate information on R&D products, thereby legitimizing R&D within the states. However, many states have had difficulty in disseminating research results and products and in promoting their utilization. In addition, some states deliberately separate the administration of research from that of development and demonstration. In small states, RCUs have not had enough money to support research, a full-time director, and clerical services. In some states, Part C funds are being used for purposes that should be supported by program operating funds (Part B), for example, operation of state management information systems and routine program evaluation (although development of management information systems and plans for evaluation are legitimate R&D functions).

Recommendation Congress and the Commissioner of Education should ensure that the Office of Education allocate funds specifically for the RCUs based on a periodic evaluation of each RCU's activities. States that have effective RCUs should receive a minimum allocation (approximately $25,000) plus a population-determined amount, even if this necessitates a cutback in the present funding levels of the larger states. The states should be encouraged to provide additional funding from program monies (Part B) and from other state sources. One way of doing this would

be to require that federal research funds for RCUs be matched (perhaps at a 25-percent rate) from federal funds for program operation or state sources.

The Office of Education should provide guidelines and organizational support for the management of R&D in RCUs and for the establishment of cooperative activities among RCUs.

RCUs should be responsible for state-level management of demonstrations (Part D), research (Part C), and curriculum development projects (Part I). They should be required to develop a process for defining research priorities for their states and providing input for setting priorities at the federal level. RCUs should also be concerned with the validation of R&D products before these products are widely disseminated or implemented in the state. RCUs should require that intensive evaluation be built into a sample of their research projects. RCUs should be required to continue dissemination and utilization efforts in order to develop their capacities to serve as brokers of R&D. RCUs should cooperate with the national R&D centers and with other national dissemination efforts. RCUs should both provide intellectual leadership for research and involve local practitioners in research in order to facilitate the utilization of R&D results in vocational education.

DISSEMINATION AND UTILIZATION

The Committee views dissemination and utilization as extremely important aspects of the vocational education R&D program. Both are essential in moving R&D products into operating vocational education programs. Three components of the dissemination and utilization process are discussed below in separate conclusions and recommendations: information collection and retrieval, information analysis, and utilization. Dissemination is discussed in conjunction with each of these components.

Information Collection and Retrieval

Conclusion Research reports and other products of vocational education R&D have been made accessible by the NIE-sponsored ERIC system, supplemented by the USOE-sponsored AIM/ARM project. However, the development of a comprehensive information resource system linked to a dissemination network has not received adequate support from Central ERIC. The work of ERIC/CICE and AIM/ARM have not been sufficiently integrated and, taken together, have only partly met the needs of vocational education personnel. Audiovisual materials are one of the major omissions from existing retrieval systems.

Recommendation The Secretary of HEW and the Commissioner of Education should ensure that vocational education has a comprehensive information resource system linked to a dissemination network serving practitioners. The vocational and technical education portion of [illegible]/CIJE should be administered separately by USOE's Bureau of Occu[illegible]nal and Adult Education until Central ERIC is able to support a [illegible]prehensive system for vocational education. The system should be [illegible]ated by an organization that has demonstrated ability to coordinate [illegible]ergent activities and develop strong links with practitioners. An adequately funded clearinghouse for vocational and technical education should include AIM/ARM and articulate with other vocational education R&D activities.

Every vocational education R&D project should be required to submit its reports and products to ERIC's Resources in Education and Current Index to Journals in Education, to AIM/ARM, and to vocational education research libraries, where they will be available for selection, adoption, adaptation, and installation by users through the linking dissemination network. In addition, selected projects should be required and funded to widely disseminate their own R&D products. There should be an intensive program of activities to help RCUs in their dissemination role in a comprehensive dissemination network. The ERIC and AIM/ARM systems should cooperate with other agencies to maintain system compatibility and avoid duplication of effort. The vocational education information resource system should cooperate with Central ERIC, ERIC contractors, other information systems, and the vocational education community to overcome the persistent technical problems related to copyrighted, nonprint, and poor print materials. Some provision should also be made for establishing a system for maintaining and disseminating audiovisual materials.

Information Analysis

Conclusion Many vocational educators are either unaware of R&D results and products or are unable to understand (and subsequently use) them. Simply mailing out copies of reports is not always adequate. Information synthesis and analysis have not been given adequate or long-lasting support by USOE. Various kinds of information analysis are often desirable: summary and synthesis of research on the same or related topics, and research analyses performed for different purposes or different audiences. Nonprint media are often effective but not often used. Personal contacts between the research and practice communities at workshops and demonstration sites have been more successful than writ-

ten forms of communication in disseminating R&D but have been used much less frequently.

Recommendation The Commissioner of Education should establish an information analysis program to transform information on critical problems into appealing, new forms targeted to diverse user groups. These new products should include interpretations of research and commissioned analyses of research. Special collections of information on topics such as vocational education consultants, nonprint media, legislation, and exemplary programs should be developed.

The Commissioner of Education should fund studies of the needs of users of R&D to determine the most effective methods of dissemination and the most appropriate forms of information analysis for different situations and different users. New products and dissemination strategies based on the results of user studies should be developed and implemented.

Utilization

Conclusion In general, neither the federal sponsors (in requests for proposals and grant announcements) nor researchers have planned for adequate dissemination and utilization activities. There has been little effort to increase user receptivity to R&D outcomes, to provide technical assistance in utilization, or to document utilization. Dissemination and utilization have not been included among federal priorities for vocational education R&D.

Recommendation USOE must assume responsibility for ensuring that R&D results and products are disseminated and utilized and should designate a significant proportion of federal R&D funds for these activities. RCUs should be funded and encouraged to serve as state-level links in the dissemination network and to provide practitioners with opportunities for involvement in the R&D process. The national center(s) should be made responsible for assessing R&D outcomes, for creating user awareness of promising innovations, and for assisting users with application of suitable R&D outcomes. Periodically, selected SEAs, local education agencies, universities, professional organizations should be funded to demonstrate dissemination strategies, to assist with dissemination and utilization of specific products, and to conduct research on dissemination and utilization. User training programs involving R&D personnel, administrators, and educators designed to improve the flow of information from the resource system to the practice community should be conducted.

APPENDIXES

Appendix A
Review of R&D in Major Priority Areas

The members and staff of the Committee on Vocational Education Research and Development reviewed literature on nine major research topics:

- Career development and guidance
- Students with special needs
- Characteristics of students
- Teacher education
- Instructional techniques
- Curriculum development
- Labor market supply and demand information
- Administration of vocational education
- Evaluation of vocational education programs

Sources included 15 papers commissioned by the Committee (see Appendix B) on various aspects of vocational education R&D; the review and synthesis monograph series published by the Ohio State University Center for Vocational Education; and numerous reports recommended by members of the Committee and others working in vocational education.

These resources did not provide a complete review of vocational education R&D over the last ten years. The Ohio State monograph series, which is intended to review and synthesize the literature in several categories within vocational education, is necessarily selective in the findings reported and the topics reviewed. Further, the less recent monographs of

the series, written between 1966 and 1970, do not contain current information. Unfortunately for this Committee as well as for the progress of vocational education R&D, the monograph series was largely discontinued after 1972 when funding was withdrawn.

As noted in Chapter 4, the Committee was unable to review projects funded only under the 1963 Act and the 1968 Amendments because many project reports do not exist and because it was impossible in many cases to identify a project's funding source. Therefore, this review covers R&D projects pertinent to vocational education, whether or not they were funded under the vocational education R&D legislation.

CAREER DEVELOPMENT AND GUIDANCE

One line of research in career development dates back to Super's longitudinal Career Pattern Study of the late 1950s, which became the foundation for the self-concept approach to career decision making (Herr 1975). Super's self-concept theory suggests that people choose careers in which they can implement their self-concepts. Students' self-concepts are hypothesized to be similar to their descriptions of people in the occupations they feel they will eventually enter.

Hypotheses derived from Super's theory have been tested by numerous educational and other researchers. For example, Ziegler gathered data from 428 male college students on self-descriptions, preferred occupations, and probable occupations (Mitchell et al. 1975). Study results indicate that students saw themselves as being more like people in careers they wanted to enter than like people in jobs they disliked, a finding that supports Super's self-concept theory. However, the precise events and experiences that create various self-concepts have not been specified.

Like Super, many theorists have been concerned with occupational selection as an expression of personality. For example, Holland's model of vocational choice behavior includes a six-category typology of personality and predicts that individuals will choose occupations in categories consistent with their personality types (Mitchell et al. 1975). Empirical studies exploring this theory have yielded inconclusive results, partly due to the difficulty of assigning students to personality types. What causes people to prefer occupations in one or more of these six categories remains to be discovered.

Krumboltz (1975) has advanced a social learning theory approach specifying factors that influence educational or occupational preferences. Mitchell's review confirms several propositions of the theory, showing that educational or occupational preferences are related to (1) positive reinforcement (such as successful performance in a course), (2) reinforce-

ment by a valued person (such as a parent or a favorite teacher) who advocates entry into a course or occupation, or (3) exposure to "positive words and images associated with the course, occupation, or field of work" (Mitchell 1975, p. 42). Other studies confirm that an individual is more likely to enroll in a course or seek employment in an occupation if he or she has recently expressed a preference for that course or occupation, if opportunities exist for participation or employment, or if he or she has learned skills that match the occupational requirement (Mitchell et al. 1975).

Still other studies, reviewed by Homer, Buterbaugh, and Carefoot (Mitchell et al. 1975), show that occupational choice is influenced by the occupation of the father, attitudes of parents toward education, and the education of parents. They note that on-the-job experience influences decision making; rural students are more concerned with learning a specific vocation than are urban students; and farming as an occupation is more often transmitted from father to son than are other occupations. Many theories of occupational decision making have one common implication for vocational guidance: guidance should not merely react to a problem or concern an immediate choice, but should teach decision-making skills appropriate to vocational choices. However, evidence that teaching such skills results in better decisions does not exist. Although a large body of empirical data exists on certain aspects of vocational decision making, knowledge is sketchy and the studies cannot be compared easily with one another (Mitchell et al. 1975).

With the growth of career development theory, the elements and objectives of vocational guidance have received more attention. For example, Martin developed a conceptual model for the design of guidance materials for non-college-bound and culturally disadvantaged young people (Tennyson 1968). Krumboltz and his colleagues evaluated the success of specific guidance techniques in effecting desired changes in vocational behavior. They found that "verbal reinforcement of information seeking responses during the (counseling) interview resulted in greater exploration of relevant occupational and educational information outside of the counseling situation" (p. 360).

Other research has attempted to identify effective guidance techniques, such as counseling skills required to accomplish specific goals. Counseling skills identified by researchers at Michigan State and Stanford Universities are related to contact, postural position, reflection of feeling, and summarization of feeling (Herr 1975). The trend toward creating behavioral objectives for those receiving vocational guidance has accelerated since the career education movement began in 1971. Researchers at the Center for Vocational Education in Ohio created a ten-phase mod-

el for vocational guidance programming that includes the translation of goals into student behavioral objectives (Herr 1975).

Measurement devices have been developed to gauge success in attaining the specific behavioral goals of career development. For example, Crites developed the Career Maturity Inventory, composed of an attitude scale and a competence test intended to measure work orientation, independence in decision making, self-appraisal, and occupational information (Herr 1975).

Several computer-based guidance systems have been developed, such as the Pennsylvania State University Computer-Assisted Career Exploration System. These systems attempt to provide accurate and complete occupational information for rational decision making by students. Information is provided in multimedia forms, such as slides and computer printouts. Some systems even provide students with training in decision making (Herr 1975).

Many of these programmatic approaches to vocational guidance focus on preparing students to deal with the process of career decision making rather than with the actual career choice (Herr 1975). Vocational education needs more knowledge of how and why people choose and change careers.

STUDENTS WITH SPECIAL NEEDS

In accordance with the legislative intent that R&D be directed toward the problems of the disadvantaged and the handicapped, researchers have investigated the characteristics and problems of groups with special needs, and programs have been developed to serve those groups. Also, recent legal and social pressures have prompted R&D to study women in vocational education.

Women

An Ohio State research synthesis monograph on women in the world of work describes studies that have assessed the training needs of women, patterns of expected growth in job openings for women, and influences on the vocational choices of women. One study identified the attitudes of women toward careers and marriage by analyzing data on a career history sheet and a set of attitudinal scales for a sample of 1,237 girls and women. Attitudes affecting life-style included: "(1) a woman's impression of male's reaction to the use of her intelligence; (2) struggle over the possible position of dominance of men at work and the place of women

at home; and (3) conflict between family and work demands upon the time of wife and mother" (Kievit 1972, p. 63).

Although there are some studies on women in vocational education, Roby (1975) notes that there has been relatively little vocational education R&D funding devoted to the needs of women, particularly since more than half the students in vocational education programs are women. For example, in fiscal 1974 only one out of 93 federally funded and administered Part C projects pertained directly to women. In the same year, no projects specifically on women were funded under Part I or Part D. Furthermore, in 1975 only three of the 50 state departments of education were sponsoring research on the needs of girls and women.

The Disadvantaged

R&D concerned with problems of the disadvantaged became a USOE priority in fiscal 1971, although legislation first emphasized the problems of the disadvantaged in 1963. Many studies concern the assessment of needs, identification of special problems, or development of programs to meet special needs. The Ohio State monograph synthesizing research on the urban disadvantaged acknowledges that research has lacked extensiveness and quality. Topics needing more attention include public school vocational education programs, national surveys, teacher preparation, student follow-up studies, and structured evaluation (Lockette and Davenport 1971). In addition, "among the studies related to vocational education which exist, there is considerable duplication of data" (p. 34).

However, some significant findings on the disadvantaged have emerged. For example, it has been shown that the involvement of the community in vocational education programs for the disadvantaged increases the completion and placement rates of both in-school and out-of-school trainees (Lockette and Davenport 1971). Also, research on out-of-school vocational education programs for the urban disadvantaged has shown them to be more successful than in-school programs in placing graduates in jobs.

Some research has been done to determine the vocational education needs and characteristics of young people in rural areas and to compare these with the needs and characteristics of urban youths. For example, Boykin's findings support the generalization that the educational and occupational aspirations of urban youths are higher than those of young people in rural areas (Griessman and Densley 1969). It has also been shown that most rural students ultimately look for urban jobs. This sug-

gests that local occupational surveys cannot accurately determine what occupations should be taught in each school.

Adults

Research related to adult students has been directed towards identifying effective techniques for teaching adults. For example, one study reports that programmed learning was more successful than the lecture-discussion method in terms of total knowledge gained in adult vocational agriculture departments in five Northeastern states (Adams 1972, p. 38).

Ethnic Minorities

Phyllis Hamilton's report (1975) on vocational education R&D on the needs of ethnic minorities states that little research has been aimed toward minority student needs, in part because administrators of vocational education R&D apparently hope that special needs could be met through general research on vocational education. From fiscal 1964 to fiscal 1969, about eight percent of Section 4(c) funding was devoted to ethnic minority needs, and about five percent each year of Part C funding was concerned with the problems of minority students.

A few studies focusing on the needs of ethnic minorities have received much attention. For example, a study by Wilford Wilms shows that neither public nor vocational education has been successful in helping minority students overcome barriers of class and income (Hamilton 1975). However, whether or not vocational education can reasonably be expected to overcome these barriers has received little [illegible] Hamilton draws several conclusions on the basis of her review [illegible] conducted under the 1963 and 1968 legislation (pp. 40–49).

1. The small amount of vocational education research that has been conducted for ethnic minority student needs has been underutilized in program development.
2. The negative image of vocational education held by minority groups has been reinforced by its use of labels such as "disadvantaged."
3. Much of vocational education research has been based on stereotypes of the "culturally disadvantaged." Few have tried to identify positive attributes.
4. Specific skill training has been a major emphasis of vocational education research for ethnic minorities although remedial basic academic training was a minor emphasis.

5. Part D exemplary projects and fiscal 1974 projects show increased emphasis on more relevant career guidance for minority students.

6. A negative self-concept was seen as the biggest block to motivation for ethnic minorities; use of peer counselors was found to raise self-image.

7. Staff attitudes, expectations, and behaviors are critical variables in providing effective vocational training for minority students.

8. No research on recruitment was conducted, but use of classroom para-professionals was a major theme of training activities.

9. Little research on ethnic minorities has concentrated on improving external linkages with business and industry.

10. There is an emerging bicultural emphasis in vocational education research activity on ethnic minority needs.

CHARACTERISTICS OF STUDENTS

Several research efforts describe the personal and social characteristics of vocational education students. Although a 1970 USOE study (Lecht 1972) reports that vocational students resemble the general student population, most studies indicate that vocational students have lower socioeconomic status and less academic ability than other students. The USOE report, although fairly recent and involving 29,000 secondary school students, contains data inconsistencies noted by Lecht, and its conclusions are therefore questionable.

Other national studies—Project TALENT and Somer's 1966 national survey of 1,500 students—indicate that the heads of families of vocational students have had less education than family heads of high school students in the academic curriculum (Lecht 1972). Project TALENT data also indicate that vocational students have less academic ability than other students, as measured by tests of verbal knowledge, verbal reasoning, mathematical aptitude, general knowledge, and similar indices. In addition, vocational students differ on the average from the general student population in their socioeconomic background as measured by occupation, income, or education of family heads (Evans and Galloway 1973). The degree to which these differences are due to student choice or to assignment by the school (tracking) has not been determined (Bowen 1975).

A 1969 USOE survey and a University of Wisconsin national survey in 1966 collected data on the racial composition of vocational education programs. The USOE survey found that 20 percent of secondary school vocational students were from minority groups, while the earlier Wisconsin study indicated that eight percent were from minority groups; this

suggests that vocational education may have served more minority students in 1969 than in 1966 (Lecht 1972). Official reports indicate that the proportion of "disadvantaged" students in vocational education programs has increased since 1966, but the data are not conclusive, and the extent to which "disadvantaged" students are from minority groups is not clear. Changes in definition and classification and lack of information on students' backgrounds collected by local school districts have limited the collection of national data on racial and other characteristics of students.

In addition to national surveys, state research projects have attempted to obtain information on the age, sex, socioeconomic background, and academic ability of vocational education students. Lecht (1974) cites examples of findings from such projects:

1. "More women of moderate ability enter occupational curricula whereas occupational men tend to be concentrated at lower ability levels," according to a review of several studies (p. 118).
2. A survey of 50 junior colleges shows that "vocational-technical college students do not differ greatly in self-reported high school grades from junior college students in general, but females tend to be superior to males" (p. 119).
3. A sample of students enrolled in Washington State high schools, who plan to attend post-secondary business or vocational schools, reported lower grades, less interest in school work, and more dissatisfaction with school than a sample planning to attend college (p. 131).
4. In the same sample, it was found that students' educational aspirations were influenced by their parents' educational attainments (p. 131).
5. A survey of freshmen at a community college in Michigan shows that those enrolled in an academic curriculum evaluated their career potentials higher than did students enrolled in an occupational curriculum (pp. 140-141).

TEACHER EDUCATION

The goal of teacher education, as described by Evans and Terry (1971), is to devise ways in which teachers can be prepared to teach accurately, effectively, and broadly so that their students will have maximum opportunities to control their own future environments. Research in teacher education has not had a high priority in the vocational education R&D program funded under the 1963 and 1968 legislation. Consequently, as observed by Hamilton (1973), many researchers have concluded that

little is known about achieving teacher effectiveness or about the relationship between teacher behavior and student growth. There have been some more recent developments in teacher education, but it cannot be demonstrated that they have been incorporated into existing vocational teacher education. Kievit (1975) reports that teacher education programs are most often determined by tradition or personal experience. She states that "the extent to which R&D has had an impact on teacher behavior through pre-service and in-service education is still largely speculative" (p. 32).

Another reviewer of research in teacher education, Douglas Sjogren (1971a), notes that evaluations of teacher education programs are rare. Many are either accreditation reviews by regional agencies or by the National Council for Accreditation of Teacher Education. Others are one-time-only evaluations of specific projects that have little or no impact on future projects and have little utility for making decisions about programs while they are operating; this type of evaluation is appropriate only when limited resources preclude more extensive study, according to Sjogren. Sjogren states that there have been no rigorous, objective, empirical, process-oriented evaluations. However, Schill and Allen (1974) did a follow-up study of 692 full-time teachers who had completed their education during the preceding five-year period; the study indicates that teachers in the teacher education program in California had learned to perform most of the tasks encountered in instruction.

Another review of vocational teacher education (Swanson 1974) stresses the inadequacy of the data base for reviewing and improving the preparation of teachers. First, there are few data on programs not sponsored by the states, such as on-the-job training in business and industry. Second, data on students are usually only enrollment data; data on institution, program, occupational area, and duration of enrollment are not usually collected. Therefore, it is hard to assess even current demand for vocational teachers. Third, there are insufficient data on the current and future supply of teachers. Fourth, not enough is known about vocational teacher programs, for example, who conducts them, how the programs compare with one another, and how good their graduating teachers are.

Despite limitations in knowledge available on teacher education, some progress has been made by R&D in finding more effective ways to alter teacher behavior. The identification of teacher competencies and research on pre-service and in-service education have been major subjects of exploration. An Ohio State research synthesis monograph by Peterson (1973) reports several studies that determined the competencies required of vocational teachers. For example, Peterson cites three studies in agriculture by Nattress, Kruskap, and Mitschele that examined competen-

cies needed by vocational agriculture teachers in crops and soil science, farm management, and animal science.

Peterson (1973) also reports on an evaluation of competency-based teacher education (CBTE) programs in Nebraska and Minnesota that show evidence of improved beginning teacher performance and highly improved student and teacher satisfaction. Using the CBTE approach, teacher competencies are specified and prospective teachers are held accountable for acquiring them. Hamilton (1973, p. 5) states that CBTE is "primarily an outgrowth of the accountability movement in education," which is viewed as a radical innovation in education, but is not really different from earlier efforts. Hamilton states that CBTE is based upon an inadequate research foundation (p. 21). She cites a report by Heath and Nielsen based on a review of 42 studies of CBTE concluding that an empirical basis for CBTE simply does not exist (p. 20). Hamilton cautions that CBTE is "being oversold by USOE and creating unrealistic expectations for widespread educational reform that could prematurely destroy the movement's potential" (p. vii). However, advocates of CBTE believe that teacher education will be emphasized in the future and that CBTE programs will be developed on the basis of empirical knowledge of learning.

A considerable number of research projects have been conducted in pre-service education, which is directed toward teaching novices the necessary competencies for effective teaching. Moss (1971) reviewed research designed to test some of the assumptions underlying pre-service programs and found that the best predictor of teacher effectiveness appears to be academic achievement in teacher education programs. Moss cited several studies indicating that the number of years of teachers' experience in the occupation being taught is not correlated with student gains in verbal and manual skills (p. 45). Teachers' technical skills are important to student learning, but years of occupational experience do not necessarily ensure high levels of technical skills. Moss states that acquisition of technical skills by teachers via work experience usually takes longer than necessary; skills are too highly specialized to be maximally useful; and by the time workers become teachers, the probability of pursuing further education has been reduced and their "worker value orientation may be too rigid" (p. 47). Also, a study by Cappiello reported by Moss indicates that student teaching has some benefits but that "it is frequently too little and too late" (p. 59).

Research funds for pre-service and in-service teacher education have supported numerous workshops, conferences, and institutes as means of disseminating information to teachers (Kievit 1975). Relatively few studies have assessed the influence of workshops and institutes on teacher

behavior, but there are some. Miller studied a ten-week summer apprenticeship program for prospective teachers and found that it changed attitudes that improved teacher preparation (Peterson 1973). Techniques for micro-teaching, which deals with the division of instructional material into small or micro units, have been developed and evaluated for pre-service teacher education. Peterson cites one study by Bell that found micro-teaching superior to traditional forms of teacher preparation.

In-service teacher education is directed toward continuing the improvement and development of experienced teachers. Research on in-service teacher education has compared the merits of various educational feedback techniques for improving teacher skill performance (Peterson 1973). Peterson reports that the use of video-taping techniques in supplying both pre-service and in-service teachers with feedback relating to their teaching performance has attracted much attention. Hoerner et al. conclude that the use of video-feedback was a beneficial technique in pre-service trade and industrial education workshops (Peterson 1973). Kelley et al. (1971), in a study of the feasibility of remote supervision of home economics student teachers, found that teachers and supervising teachers expressed greater satisfaction with face-to-face and video-phone techniques as opposed to audio-phone techniques. Harrington and Doty (1971) found that video-feedback of micro-teaching techniques was effective and feasible for improving selected teaching skills of technical teachers.

It appears that R&D in vocational teacher education has had little actual influence to date upon improving teacher effectiveness, although some gains have been reported. Few, if any, national priorities or state plans have included research and development in vocational teacher education.

INSTRUCTIONAL TECHNIQUES

Although a recent, comprehensive summary or synthesis of research on instructional methods in vocational education is not available, several instructional techniques are reported in the Ohio State review and synthesis monographs on vocational education content, industrial arts, community colleges, adult education, education of the rural disadvantaged, and individualized instruction.

Many instructional methods described in the reviews attempt to give vocational instruction or guidance with substantially reduced interaction between student and teacher or counselor. Such methods include programmed instruction (usually printed material), television, computer-assisted guidance, teaching machines, multimedia packages, and a variety

of methods of self-instruction. These methods often are very costly to develop, requiring specialized professional talent and training to design and implement as well as much field testing before they can be used with confidence. None of the methods is unique to vocational education and only a small fraction of the research on those methods has been conducted using vocational education content, students, or settings. Vocational education research on these methods has used defective and weak methodology. As a result, many conclusions are tentative and only limited guidance can be given for the designation of methods for specific learning situations.

A second group of instructional methods in vocational education is characterized by settings for learning outside the classroom. Such settings are considered important in relating occupational preparation to learning appropriate interpersonal behavior and attitudes (Law 1971). Included in this category are cooperative education methods, clinical practica, on-the-job training, vocational exploration, and a variety of special-purpose techniques such as those devised to assist the rural disadvantaged: family-centered educational planning, pre-school preparation, vocational exploration and mobile training facilities. Much of the research on these extra-classroom instructional methods has been descriptive, developmental, or comparative. There has been only limited use of experimentation, and research methodology has often been defective. Like the previous group of methods, these methods seem to affect learning, but on the basis of limited evidence it is difficult to demonstrate their superiority over other methods or prescribe them differentially for particular learning problems.

Cooperative education programs train students by combining schoolwork with job experience. The planning and supervision of these programs is done by both the school and the employers so that each contributes to the students' education and to their employability. An assessment of research in cooperative vocational education methods (Wallace 1970) includes observations that apply to all extra-classroom instructional methods. Wallace notes (1) the lack of a theoretical framework to guide the research and the applications of research findings; (2) the need for improved research technology for evaluation of such complex instruction; (3) the need for attention to many student and teacher variables and their interactions in complex learning environments; and (4) the need for attention to changes in students related to higher-level intellectual skills, social skills, attitudes, and self-identity.

However, a recent study (Walsh and Breglio 1976) in large cities indicates that at the post-secondary level, cooperative education markedly increases the entry-level earnings of minority group members. Moreover,

jobs for students in training were readily available except in one city in which the unemployment rate was nearly 15 percent.

The effectiveness of job training in industry has been explored, and some of the benefits and drawbacks of job training at the work site have been identified. Little research has been done on this beyond the documentation of trends in the location of training (Wenig and Wolansky 1972). Very little is known about which tasks are taught most effectively on the job or in school.

A third group of instructional methods in vocational education, used in enrichment programs in schools for occupational learning, include the simulations of occupational experience, team teaching, and individualized instruction. The job simulation methods offer the means of acquiring and practicing job skills in a controlled situation having instructional intervention, pacing for effective learning, minimum real penalties for error, and substantially reduced training costs compared with on-the-job learning. The effectiveness of simulation seems critically dependent upon the aspects of the performance setting being simulated, and the fidelity with which those aspects are simulated (Fitzpatrick and Morrison 1971). Although most of the research on simulation has been done outside vocational education, notably in military and business settings, the evidence (for example, McClelland 1970) seems to be that simulation can be effective in vocational instruction.

Individualized instruction allows each student to progress in a program at his or her own pace. Research on individualized instruction in vocational and technical education has demonstrated that some individualized instructional techniques have been effective for specific student groups under specific conditions. However, results are typically neither conclusive nor generalizable. Esbensen's report (Impellitteri and Finch 1971) of experiences in Duluth, Minnesota, states, "It is difficult to state with assurance that individualized instruction is indisputably superior to traditional forms of schooling" (p. 21).

Although much of the research concerned with individualized instruction is inconclusive, many vocational education programs are using tutorial laboratories to individualize instruction. For example, in Charlotte, North Carolina, an occupational mix program in ten high schools supplements the regular vocational courses in business education. Teachers proficient in individualized instruction manage laboratories containing autotutorial materials. Regional occupational centers and programs in the western states have also used individualized instructional laboratories to assist students with learning difficulties to attain the learning achievement necessary for entering the regular vocational education programs.

One kind of instructional approach that is difficult to classify is the residential school that often combines aspects of all three types of instruction identified above. Warmbrod (1970) describes a dozen residential programs as well as some Job Corps programs. Relatively little research has been conducted on these programs, but there is some favorable evidence concerning graduations, job placements, and other program objectives. Most residential programs did not survive beyond the initial short-term federal funding period.

A special case is the Mountain-Plains project at Glasgow Air Force Base, Montana, which has been supported by federal funds since fiscal 1971. The Mountain-Plains project is described by the program's director, Bruce C. Perryman (1975) as a family-oriented, residential program designed to economically rehabilitate disadvantaged rural families from a six-state region. Programs and services provided for participating families include career guidance; a career development program encompassing the development of work attitudes and occupational preparation; limited medical, dental, and optical services; a family core curriculum that teaches home management, health, consumer education, parent responsibility, and recreation skills; and community and job placement services. Over 900 families have entered the program, including 22.6 percent representing minority groups. Project analysts predict the program will be cost-beneficial to society, but some researchers question large expenditures for residential projects when R&D funds are limited.

CURRICULUM DEVELOPMENT

Curriculum development, demonstration, and research have been listed frequently among federal priorities for vocational education R&D since the passage of the Vocational Education Act of 1963. The federal resources made available for curriculum work, augmented by substantial investments by state and local agencies, have resulted in a large number of highly diverse curriculum projects.

The development of new curricula does not always result in usable curriculum materials. When contractors or grant recipients have little or no functional relationship to the agencies involved in instruction or teacher preparation, they may develop inappropriate curricula. The testing of curriculum materials has sometimes occurred under highly contrived conditions involving special incentives or preferential treatment for the testing sites but not for the operating programs. Evaluations have rarely assessed the capacity of the curricula to continue as part of a nonexperimental instructional program.

Much of the curriculum development in vocational education has

been directed toward a small proportion of students and instructors involved in new occupations because they are said to need special program assistance. However, the result is that the programs, with large enrollments—for example, home economics, business and office education, agriculture, and auto mechanics—are not supported by adequate curriculum development.

Curriculum Content

Several studies of vocational students and graduates in the 1960s indicate little relationship between the pattern of program enrollments and the distribution of job opportunities in the community and found that relatively small proportions of vocational graduates obtained jobs directly related to their training. However, since those studies were completed, some progress has been made toward improving both the methods for selecting curriculum content and the relevance of curricula for real job opportunities.

Studies to determine the content of curricula to be developed have used both primary and secondary sources. Primary sources noted by Larson (1969) include mail surveys and interviews with teachers, employers, and students; secondary sources include manuals, articles, and textbooks. In addition, Phipps and Evans (1968) note that subject matter is often determined by the opinions of experts. They state that development "is questionable when no validation studies are conducted to confirm the wisdom and biases of the 'experts'" (p. 372). The use of expert opinion in the development of curricula is noted by Carpenter and Rodgers (1970) as one of the primary sources for the development of agriculture education curricula. They state (p. 24):

> In practice, the typical curriculum builder in agricultural education considers results of a competency study of his own or of another investigator, seeks out expert opinion by formal or informal surveys, and uses experienced teachers to assist in developing a curriculum outline and related teaching materials . . .

Some studies relying heavily on primary sources to determine the content of curricula are reported in the Ohio State review and synthesis series. Crawford (Ashmum and Larson 1970) interviewed workers and supervisors to determine critical tasks to be learned by students in distributive (sales occupations) education programs. Crawford's work served as a basis for the development of courses of study and materials for individual use by students. For office occupations, Bangs and Hiliestad analyzed interview responses from data processing managers, employers, teachers, and executives and developed data processing curricu-

la and course outlines (Price and Hopkins 1970). Similarly, Carter surveyed several hundred local office supervisors to identify which tasks should receive more or less emphasis in business occupations curricula (Price and Hopkins 1970).

Another approach to improving the correspondence between vocational curricula and jobs has been the development of task analysis. Task analysis is a method of examining the various tasks required in a job and identifying their characteristics and the skills required for them. Methods for constructing and analyzing job task inventories, developed by the U.S. Air Force (Christal 1974), have been adapted for application to civilian occupations (for example, Melching and Borcher 1973). Innovative methods have been devised for identifying the technical concepts required for effective performance of various occupations (Moss et al. 1970). Computer programs have been developed to perform the data processing required by the new methods (for example, Mead 1972, Stacey 1974).

In order to improve the relevance of curricula to the job market, curricula have been developed for new occupations, such as biomedical equipment technician, electro-mechanical technician, laser and electro-optical technician, a variety of allied health occupations, and computer science occupations (Simpson 1975). Traditional programs have also been revised to correspond more closely with current employment opportunities. For example, the NOBELS project (Lanham et al. 1972) was designed to develop and keep current a new secondary school curriculum in business and office occupations. Data were gathered on the performance requirements of new office occupations (Huffman and Gust 1970) as well as on current jobs; a comprehensive set of educational objectives was prepared for which efficient learning conditions could be devised.

Student Needs

Ten years ago, the vocational education programs in most schools were limited in variety, and entrance standards were sometimes as severe as for academic programs. Recent reviews of vocational education curricula (Maxwell et al. 1973, Oakleif 1971, Lockette and Davenport 1971, Simpson 1975) suggest that more curricula now offer a broader range of educational and vocational choices and will accommodate the needs of many more students.

Phipps and Evans (1968) list curricula that have been developed for dropout-prone students and for disadvantaged rural youth. Morrison (1970) cites programs to prepare disadvantaged students for health, food,

education, and service occupations. Simpson (1975), reporting a trend toward paying more attention to students' characteristics and needs, cites among other curricula a source book developed to assist in devising programs for inmates of correctional institutions, career education materials for Spanish-speaking children, and business management curricula for minorities and disadvantaged learners. Stutz and Merrell (1967) describe the development of a vocational program designed for students in small, isolated, rural schools. The Center for Vocational Education (1975) developed curricula for deaf students and continues to prepare career education materials for them. Curricula also have been completed to prepare Indian students to be advanced electro-mechanical technicians (Terry et al. 1975).

In another attempt to meet students' varying needs, individualized curricula have been developed to enable any student to enter a program at a level determined by his or her own capabilities. Each student can then acquire vocational training in an individual sequence that provides preparation for occupations at successively higher levels. Such a program can accept virtually all students and provide each with vocational competence at whatever level is permitted by the student's interests, abilities, motivation, and time.

Several programs have been undertaken to implement individualized curricula. The pre-engineering technology program, or Richmond Plan (Asbell 1967), employed the basic concept but limited entrance to students of at least average ability who were underachieving. Project FEAST (Batmale 1966), which adapted the Richmond Plan to food, education, and service technology, accommodated students at all levels of ability and provided a graduated sequence of occupational goals. An attempt was made to use this strategy comprehensively in Project ABLE of the American Institutes for Research and the Quincy, Massachusetts, Public Schools (1964): individualized curricula were developed in 11 broad vocational areas involving over 200 occupations organized into more than 30 sequences.

Occupational Adaptability

Because individuals can expect to shift occupations several times during their working lives, it is important to design vocational curricula that provide a useful basis for occupational versatility. Phipps and Evans (1968) identify and illustrate several strategies that have been used to determine such curriculum content. The transferability approach attempts to identify content with high transfer value (generalizability) for many types and levels of jobs. The competency pattern approach at-

tempts to identify patterns of competencies or skills needed in occupational areas as contrasted with studies of single job titles. The functions of industry approach analyzes those functions from which the educational needs of workers are deduced.

By far, the most commonly used strategy has been the cluster approach, in which learners are prepared for a group or cluster of occupations. The strategy identifies requirements common to several current occupations and includes preparation for these shared requirements in the curriculum (Sjogren and Sahl 1966). The cluster approach has been used to develop curricula for technicians (Schill and Arnold 1965), office workers (Perkins et al. 1968), building trades workers (Bakamis et al. 1966), construction workers (Frantz 1967), and agricultural and metal workers (Sjogren et al. 1967). Simpson (1975) reports the development of curricula in each of the 15 occupational clusters identified by USOE. A clustering system having curriculum implications for the comprehensive career education model is reported by Taylor et al. (1972).

Significant methodological and theoretical problems are faced by researchers attempting to identify common requirements in existing jobs or to provide preparation for a variety of job opportunities. Sjogren (1971) notes that jobs have most commonly been clustered by using an arbitrary definition of similarity; this method, although subjective, is nonetheless quite reliable (repeatable). Sjogren reports the frequent use of statistical techniques such as factor analysis to define clusters by analyzing ratings or other quantified judgments of job or task characteristics. Sjogren (1969) notes that no matter what kinds of measurement and analysis techniques are used, clusters are determined in large part before the analysis, when certain jobs are selected for study and others are not. Any job or set of tasks would probably sort into different clusters depending upon the mix of jobs studied. Further, since any job is an arbitrary collection of tasks that varies from instance to instance, each job would probably sort differently depending on the particular job sites studied. Clusters have not often been studied across skill levels within job hierarchies, although such studies would identify curriculum content important for career progression.

Curriculum Integration

Gagne (1965) states that the goals of education include satisfaction with work or vocation, responsible citizenship, and participation in a variety of aesthetic experiences. Vocational educators have recognized the need to prepare students for more than just the job skills required for a particular occupation, and they have begun to emphasize the need to integrate

vocational and other curriculum elements. Attempts to provide more comprehensive, integrated programs have not usually included the extensive analysis and development that seems required for a new curriculum.

Three projects illustrate such attempts to produce comprehensive integrated curricula. Project ABLE (American Institutes for Research and Quincy Public Schools 1964) attempted to develop a full secondary school curriculum to accommodate all students who were not preparing to enter a four-year college program. The project strove to prepare students for vocational competence, responsible citizenship, and self-fulfillment (Morrison and Lecznar 1966). Numerous difficulties were encountered (Morrison 1968) and the resulting curriculum was neither as complete nor as well integrated as was intended.

The second project, called Educational System for the 70's or ES '70 (Bushnell 1967, Bushnell and Rubel 1968, E. F. Shelley & Co. 1968), was a larger and more ambitious undertaking by an organization of 17 school systems across the country in cooperation with the U.S. Office of Education. The goal was to develop a secondary school curriculum from which graduates could choose to enter a four-year college, a junior or community college, advanced vocational programs, or gainful employment. Objectives for the curriculum, stated as performance skills to be acquired by students, were to be assembled from a variety of sources, including vocational and academic education, and consolidated to define the major structure of the trial curriculum. This large, expensive project was discontinued (during an administrative reorganization of USOE) before work on a substantial portion of its objectives could be initiated.

Finally, the career education model programs (Goldhammer and Taylor 1972) were attempts to use various settings (home, school, community, work place, special residence) to integrate and give wider meaning to the elements of an educational program. Different integration strategies were used: infusing career awareness, career exploration, or career preparation into existing curricula; and using a life situation (such as a work task) as the vehicle for learning related skills (such as calculation). The models varied in their structure and methods, but each attempted to develop adaptable systems for the integrated learning of important skills. None of these models was permitted to develop as originally planned, and all terminated short of their original objectives (after an administrative reorganization in HEW). Even though some of the products and results have been disseminated, no integrated career education curricula are ready to be installed in schools.

None of these massive programs has successfully constructed an integrated curriculum that has been adopted by others. The failure may be due to the financial costs of such development, to the size and complexi-

ty of the task, to the time required for development, or to practitioners' suspicions of centrally developed curricula. However, curriculum integration is still viewed as a desirable goal. Medium-sized curricula that have been tested on students and revised, and for which teachers have been trained, have been adopted widely.

Curriculum Evaluation

According to Larson (1969), designing curricula involves the setting of training objectives. Pilot tests and evaluations to determine whether objectives are being met have been incorporated into several large-scale curriculum projects. Householder (1972) describes the American Industry Project, which developed an instructional program to help students understand basic concepts of industry and which was extensively field tested, evaluated, and revised. Evaluation studies found that students enrolled in this program had more positive attitudes towards its courses than towards others, acquired knowledge of job opportunities in industry, and showed greater interest in seeking industrial employment than they had shown prior to exposure to the program.

The Industrial Arts Curriculum Project, also described by Householder (1972), included components of field testing and in-service teacher education as well as curriculum development. Two courses were developed by the project—the World of Construction and World of Manufacturing. Developed materials were field tested throughout the country over a four-year period, evaluated, and revised. Subsequently, the project "attained a new milestone" (p. 20) by making commercially available an instructional system for industrial arts.

Householder also cited an evaluation of a project that provided industrial education experiences at the secondary, community college, and university level and emphasized the interrelationships between industry and other social institutions. The evaluation showed that students enrolled in courses in the project improved their attitudes toward school and had better attendance after participation.

Despite the positive results of the evaluative research noted in industrial arts education, Householder notes that "the body of knowledge upon which industrial arts courses is based has not yet been fully defined, categorized, and communicated" (p. 43). Similar conclusions have been drawn by reviewers of research studies in health occupations, technical education, agricultural education, and home economics education (Holloway and Kerr 1969, Phillips and Briggs 1969, Carpenter and Rogers 1970, and Nelson 1970). Nevertheless, in the Committee's hearings and in interviews, respondents mentioned curriculum projects more consist-

ently than any other type of vocational education R&D as having had impact on practitioners.

LABOR MARKET SUPPLY AND DEMAND INFORMATION

Projected labor market supply and demand information in specific occupations, particularly at the state and regional levels, can be quite useful in determining the types and amounts of vocational and technical education required for the future. Kelley et al. (1975) identified more than 300 projection studies over the period 1965-73 that have been based on local, state, and national data. The two general types of demand forecasting techniques are employer surveys and analytic projections, such as trend extrapolation. Kelley et al. state that in the studies they reviewed, 51.4 percent used employer surveys and 48.6 percent used analytic projections (p. 128). The major problem associated with both methods is that they cannot foresee all the elements that would cause trends to change, create demands in new occupations, or cause old occupations to become obsolete.

Two techniques of labor market supply analysis—multitrack and single-track research—have been discussed by Young et al. (1972). Multitrack research attempts to evaluate alternative training methods or develop data systems for evaluation. For example, Foster studied sources of trained personnel in the construction industry and found that vocational education is not supplying a "significant" number of skilled workers relative to other types of training (Young et al. 1972). He also reports that on-the-job training was judged by workers to be better than classroom training in helping people acquire skills. Similarly, Horowitz and Hermstadt analyzed workers in the tool- and die-making trade and found that many accomplished craftsmen were high-school dropouts (Young et al. 1972, p. 38). However, they also found that vocational high school combined with apprenticeship seemed to be highly effective in training workers.

Single-track research analyzes a particular type of vocational training, such as apprenticeship, on-the-job training, or military service training. Young et al. (1972) report that a national survey shows that construction, machinist, and tool- and die-skilled workers believe apprenticeship is a helpful way to learn their trades. Several studies indicate that on-the-job training is highly valued by both industry and employees (Young et al.).

Studies of labor mobility also help to determine future labor supply. These studies report fairly consistently that a high proportion of secondary school graduates find and keep jobs in or near the community in which they have attended school. For example, Eninger reports that ap-

proximately 80 percent of a national sample of 1953, 1958, and 1962 trade and industrial graduates had not moved to another city for employment purposes (Young et al. 1972). Labor market forecasts are most frequently done at state and local levels. Kelley et al. (1975) found that 12.1 percent of the studies are national in scope, 46.3 percent are state forecasts, and 41.6 percent are local. They also report that national forecasts across all occupations are recent, limited, concerned more with demand than supply, and dominated by the projections program of the Bureau of Labor Statistics. Most other national forecasts reported are related to specific occupations.

Kelley et al. conclude their review of labor market forecasting by stating that there are serious limitations in the studies they reviewed. In addition, Kaufman and Brown note that it is almost impossible to predict future supply or demand because of the many external influences on the labor market; many projections have proven to be inaccurate (Price and Hopkins 1970).

The Ohio State monograph series reviewing occupational research reports labor market research in nearly every area of vocational training. In agricultural education, for example, Heady and others have made estimates of labor requirements in farming occupations to 1980 (Carpenter and Rodgers 1970). Studies of farming opportunities, which are primarily local in scope, are appropriate because farmers tend to live within 25 miles of the schools they attended. General conclusions drawn from these studies are that aggregate farm employment, perhaps much of it of a marginal type on less productive land, has been declining, as has marginal employment in other sectors of the economy. On the other hand, the work force in nonfarm agricultural occupations is increasing. Many studies conclude that there is also an inadequate supply of off-farm agricultural workers (Carpenter and Rodgers 1970).

Price and Hopkins (1970) report that studies indicate that the occupational opportunities for business education graduates will continue to grow. Like the research on farming opportunities, local research is most useful to vocational educators since business graduates tend to work close to the schools from which they graduated.

Ohio State reviewers also report many local studies in home economics, health, trade and industrial, sales, and technical occupations. In general, growth is expected in sales occupations, public services, human services, such as social work, and environmental occupations, such as sanitation.

Studies of labor market demand for vocational education personnel are of special concern to vocational education. In 1971, Somers reported uncertainties in projections and disagreements about the likelihood of a

shortage of vocational education teachers in 1975. In the past, forecasters failed to estimate correctly the flexibility and adaptability of the sources supplying instructional personnel. Although reasonably accurate local projections have been made, Somers is critical of the few national projections of teacher supply and demand. He blames the lack of data and inaccurate projection techniques for the fact that various national studies have produced varying estimates of the size of predicted teacher shortages.

Both the quantity and quality of labor market supply data in vocational education have improved in the last few years. Many people are trying to improve demand information, which is much more difficult to predict accurately than supply information. Several states have developed and instituted management information systems containing labor market supply and demand data for use in planning vocational education programs.

ADMINISTRATION OF VOCATIONAL EDUCATION

Studies of the administration of vocational education have been reviewed by Ralph C. Wenrich (1970) for the Ohio Center for Vocational Education. In federal, state, and local administration, topics of interest include policy making, administrative structures, and program and facility planning, financing, and staffing. Studies of federal policy making have identified changes in past policies and recommended improvements based on the judgments of the researchers. The role of state departments of education in vocational education policy has also been studied. For example, Swanson studied state-level vocational education administration and found that "the primary emphasis was . . . on compliance (checking and regulating) and the secondary consideration was change and leadership" (Wenrich 1970). Other studies in state policy making, such as Frigiola's study in New Jersey, have provided the basis for recommendations for improving a state's vocational education services and programs (Wenrich 1970).

There have been few studies of the federal administration of the vocational education R&D program. Some state-level studies have attempted to describe the structure and function of area vocational schools or other state vocational programs, but few have analyzed the role of research coordinating units or state departments of education with respect to R&D or vocational education programs.

Studies of program planning at the state and local levels are usually preceded by studies of labor market demands. Researchers often attempt to match existing programs with projected labor market needs. For ex-

ample, Hendrix designed a data collection instrument to determine the labor market needs of the community, the goals of the people, space and equipment availability, and special instructional needs (Wenrich 1970). Recent understaffing at vocational schools has been a problem, and some researchers have attempted to identify new sources of teachers. In Michigan, Messerschmidt studied recruitment and hiring practices and determined that the "primary source of part-time instructors was local business and industry, and attempts to use retired industrial and military personnel were not successful" (Wenrich 1970, p. 35). Wenrich notes that a high proportion of the projects on administration are surveys involving the use of mail questionnaires. Attempts to generate information about administration are improving, but generally lack sophistication. He states (p. 56):

> We need controlled experiments, some of which would, of necessity, extend over a period of years and would involve data based upon observation rather than mere opinion.

Many researchers, developers, administrators, and practitioners cite the development of management information systems (MISS) as one of the most significant accomplishments of the past ten years of vocational education R&D. John Evans defined educational MISS as systems that "convert data into information of use to managers at different levels, places and times in the decision making process" (Hale 1971, p. 69). MISS have been developed by several state, regional, and even national organizations. For example, the "System for State Evaluation of Vocational Education" (Hale 1971) developed by the Center for Vocational Education contains data on pupil characteristics, program characteristics, and employment rates. Management reports produced by the MIS can show information such as the ethnic distribution of students by programs. Status reports on students can also be produced, enabling researchers to periodically follow-up students who graduate from or drop out of vocational education programs.

Generating state-level data about vocational education students and programs is a major task of the RCUs. Some RCUs have developed MISS with federal R&D funds. For example, the Tennessee RCU developed an MIS containing follow-up data and an occuational information system containing descriptions of jobs and vocational or career programs for all grade levels. The Tennessee MIS, developed for reporting purposes, is used to respond to requests for data analyses. This information, along with the RCU's supply and demand projections, is used in program planning. Researchers have developed state-level vocational guidance sys-

tems, containing data on job openings obtained through employer surveys, and designed to match young people with jobs.

Regional management information systems are often more efficient than state-level systems since costs and benefits can be shared by many school districts. Hale (1971) describes the Midwestern States Educational Information Project, which developed a system for collecting data on facilities, financing, instructional programs, personnel, and students that are comparable among local school districts and among cooperating states.

In addition to MISS, other techniques have been developed to facilitate management; for example, trend analysis is used to forecast student enrollment data. However, adequate data bases and relatively static conditions are necessary for trend analysis to be accurate. Hale (1971) states that often expert opinion is more valuable in planning vocational education programs than trend analysis because experts have experience that enables them to deal with a number of factors that are not formally used in trend analysis.

EVALUATION OF VOCATIONAL EDUCATION PROGRAMS

The literature describing the evaluation of vocational education programs is discouraging; it yields little useful information for vocational educators. The research designs have used analytic procedures requiring simple quantitative input and have failed to encompass many important educational issues. Evaluations have used research methods that are incompatible with the complexity of the learning, teaching, and administrative situations.

Brief reviews of what are considered to be some of the best evaluations of vocational education in the last ten years are presented in this section. The specific criterion variables studied are vocational graduates' knowledge about occupations, their job readiness, job satisfaction, and earnings.

Occupational Information

The amount of occupational information possessed by people entering the labor force may be an important determinant of future success. Decker Associates (1967) found that, compared with students in academic or general curricula, vocational graduates know slightly less about occupations and are more likely to name skilled trades as the best jobs known to them. Other students cite professional, technical, and managerial jobs as best. However, since Decker failed to control for socioeco-

nomic factors, the observed differences may be due to the differing backgrounds of the students rather than to the curricula in which they were enrolled. Using data on male high school graduates who did not attend college, Grasso (1972) found no evidence to indicate that students from vocational, general, and academic curricula differ in their knowledge about occupations. Since Grasso controlled for variables such as aptitude, family background, grades, and work experience, his conclusions are probably more valid than Decker's.

Although career education emphasizes knowledge about occupations, some vocational educators doubt that it is a valid measure of program success, since it may not be directly related to the quality or appropriateness of curricula.

Job Readiness of Vocational Graduates

Some researchers expect that a vocational graduate will be ready for the responsibilities of a particular job without further training, so that a program can be considered successful if its graduates infrequently desire immediate further training.

Grasso (1972) found that approximately 85 percent of all high school graduates who have not attended college express a desire for additional training. Among whites but not blacks, nonvocational graduates are more likely than vocational graduates to feel a lack of education or training. It is not surprising that academic students most prefer to attend college. However, for both blacks and whites, there is almost no difference in the desired type of additional training between the general and the vocational graduates. Thus, one might question the view that vocational education graduates regard themselves as better prepared for employment.

Grasso found little variation among whites from different high school programs in the kind of training they seek (which included business college, company school, apprenticeship, military service, and others). However, the types of post-secondary training actually received by the different graduates does vary; academic graduates report twice as much professional or technical training as graduates of the other programs, whereas commercial students report greater managerial training, and vocational students more skilled manual training. It appears that blacks participate in additional training to a lesser extent than whites.

Kaufman and Lewis (1968) found that almost 90 percent of the vocational graduates said their programs had made a "real effort" to prepare them for employment. This figure appears less impressive when one considers that almost 60 percent of the academic students said the same

about their programs, which put less emphasis on preparing students for immediate employment.

It must be noted that job readiness may have validity only as a short-term goal. All too often specific training for a job immediately after graduation becomes less valuable when jobs change or a student's or worker's interests change.

Job Satisfaction

Kaufman et al. (1967) found no significant differences in job satisfaction reported by graduates of vocational, academic, and general high school programs in the Northeast. Eninger (1965, 1968) found that trade and industry graduates have greater job satisfaction than do those from non-vocational curricula. Job satisfaction tends to be greater among those whose jobs relate to their training.

Garbin et al. (1970) found no difference between vocational and non-vocational programs in the degree to which their graduates report being hired at anticipated levels, achieving expected income, or "coping" with jobs. Grasso found that both black and white academic graduates and white commercial graduates hold more favorable career positions than do others, and that vocational graduates do not differ from general curriculum graduates. White academic and commercial graduates are found to have higher overall job satisfaction than graduates of the general curriculum, while the latter group is not significantly different from vocational graduates. However, for blacks, job satisfaction, which is much lower than for whites, does not vary significantly with their curricula.

Earnings

Much of the research on the effects of vocational education programs compares the earnings of vocational education graduates with either general or academic curricula graduates. Differences in starting pay and in the progression of pay with increased experience are often investigated. However, since many of the studies do not control for variables related to both the choice of high school curricula and measures of labor market success, their conclusions are suspect.

In a national study of the graduating classes of 1953, 1958, and 1962, Eninger (1965, 1968) found different results at different points in time. For example, he reported that the extent to which training is related to a graduate's job seems to affect wage rates in some samples but not in others. Eninger's conclusions are further confounded because he failed to use available control variables.

Persons et al. (1968) performed a cost-benefit study of a farm business management program conducted by public schools in Minnesota to improve both technical and entrepreneurial skills of farm operators. Criterion variables, which were the farm operator's labor earnings, returns to capital and family labor, and total farm sales, were adjusted for yearly fluctuations in annual farm income. Persons et al. found that benefits to both the individual participating farmers and the community outweighed direct and indirect costs. The study resulted in considerable growth of the farm business management program and in state legislation for program support.

Two recent studies of vocational education graduates featured special attempts to assess the effects of education on future earnings. Stromsdorfer (1972) analyzed the National Longitudinal Survey data for both 1966 and 1968. All male, out-of-school youths—with widely varying amounts of formal education—were treated as a single group. He chose to indicate annual income by multiplying earnings of the survey week by 52, thus reflecting differently from other researchers the influences of overtime, job change, multiple jobs, and time not worked. Stromsdorfer found no significant differences across curricula in the 1966 data, but in 1968 he found that former vocational students were earning about $400 more per year than academic graduates and approximately $275 per year more than the general curriculum graduates.

Grasso (1972) investigated the effects of curricula on the hourly rate of pay. For black males, he found no significant curricular differences; even work experience and post-secondary school training did not help to explain differing wage rates among blacks. For white males, curricular differences were not found to be related to the starting wage rates, but white male vocational graduates apparently benefited more from additional training than did graduates from other curricula.

Follow-Up Studies

At least two basic kinds of information to serve two different purposes can be collected in student follow-up studies: students' opinions about their programs can be used directly to alter the programs, and data on the students' performance (employment information) can be used to evaluate the success of the programs. Allen (1975) collected both types of data in his three-year follow-up study of 364 California vocational graduates. Allen overcame a common problem of follow-ups, locating the students, by using addresses supplied by the Department of Motor Vehicles, thereby maintaining contact with 97 percent of the study group. At the end of the 1973-75 period, Allen found that 75 percent of the respon-

dents were working, and 72 percent had jobs related to their high school vocational training. Seventy percent said the high school vocational training was helpful in their present jobs, and 88 percent would recommend vocational training to other students. Fifty percent had enrolled in advanced training, and 49 percent had had additional training on the job. When respondents were asked about what changes they would recommend in the program, 71 percent of the respondents recommended more applied practice; 66 percent, more job-related information, and 67 percent, better help in job placement. Most seemed satisfied with their teachers. Allen concludes (p. 25): "There is no doubt that follow-up studies can provide schools with data and information necessary for instructional modification and improvement."

Appendix B
Sources of Information

The Committee used a wide variety of sources to evaluate vocational education R&D and to describe the structure and management of the R&D program. In addition to the literature review reported in Appendix A, the Committee and its staff reviewed evaluations of vocational education, visited ten state research coordinating units (RCUs), held hearings, interviewed USOE personnel, and conducted a mail survey and a series of telephone interviews. It should be noted that comments made by personnel about their own organizations were verified by others outside those organizations whenever possible.

Two major projects evaluating the national R&D effort were reviewed, as well as listings and descriptions of single projects reported to be successful. Examples of successful projects were cited by USOE, the Southwide Research Coordinating Council, and Committee members.

Papers covering a wide range of topics were commissioned by the Committee and prepared by 15 prominent vocational educators and researchers. In addition, one Committee member prepared a paper on vocational education and women. A list of these papers is presented in Table B1.

Visits to state RCUs, which are responsible for the management of the vocational education R&D effort in each state, provided another source of information for assessing R&D and describing its administration. In order to gather relatively complete data on the RCUs—their functions and the impact of R&D in their states—ten states were chosen for comprehensive

TABLE B1 Commissioned Papers

Author	Title
Edwin L. Herr, Pennsylvania State University	Guidance and Counseling, Vocational Education, Research and Development
Jacob J. Kaufman, Pennsylvania State University	Human Resource Development and Vocational Education
Merle E. Strong, University of Wisconsin	The Status of Research Capability in Vocational Education Research and Development
Carl J. Schaefer, Rutgers University	Helter-Skelter: Vocational Education R&D
Grant Venn, Georgia State University	An Analysis of Vocational Education Research and Development Policies from Three Perspectives
Mary B. Kievit, Rutgers University	Vocational Education Research and Development as a Factor Influencing Teachers to Change Practices
Roman Pucinski, Chicago, Illinois	Vocational Research and Development: Key to Survival in America's Third Century
Teh-Wei Hu, Pennsylvania State University and Ernst W. Stromsdorfer, U.S. Department of Labor	An Analysis of the Impact of Applied Research and Demonstration Projects in Vocational Education
Phyllis D. Hamilton, Stanford Research Institute	Vocational Education Research and Development for Ethnic Minority Students
Garry R. Bice, RCU-Knoxville, Tennessee	An Analysis of Dissemination and Utilization of Vocational Education Research and Development Efforts
Joseph F. Blake, Millersville State College	Dissemination of Research and Development Products and Results in Vocational Education
David S. Bushnell, Human Resources Research Organization	Policy Alternatives in the Evaluation of Vocational Education
Carl E. Thoresen, Stanford University and Craig K. Ewart, Stanford University	Careers, Counseling, and Control
Henry M. Brickell, Policy Studies in Education	A Framework for Developing Alternative Scenarios for Vocational Education R&D
Elizabeth J. Simpson, University of Wisconsin-Madison	Curriculum Development in Vocational-Technical Education: The Part I Program

NOTE: Paper added to series by Committee member Pamela A. Roby, "Vocational Education and Women."

study. States were selected to be representative in four ways: by region, by amount of federal RCU allotment, by institutional location, and by administrative responsibility relative to Part D. RCUs in two states were visited in each of five regions: Northeast, Southeast, North Central, South Central, and West. Four states receive relatively large allotments

from the federal government; five, medium-sized allotments; and one, a small allotment. Two of the ten RCUs are based primarily at a university, the other eight are based in a division of the state department of education. In seven states, the RCU directors administer state Part D funds; RCUs in the other three do not. The Committee also chose RCUs that had both continuity in staffing and relatively high quality programs, judged on the basis of Committee and staff conversations with many RCU directors and USOE personnel. In addition to the directors of the ten RCUs selected, Committee staff interviewed a few former RCU directors, those in charge of Part D administration and dissemination, and additional RCU staff.

The Committee conducted a series of hearings in May 1975 to gather first-hand information from many people knowledgeable about vocational education R&D. Twenty selected organizations were invited to participate in the hearings. Two organizations—one representing the chief state school officers and the other representing proprietary schools—chose not to participate. Two others, representing organized student groups and vocational researchers, were unable to attend, although the researchers did send written information. In addition to the organizations, a small number of individuals representing college and university leadership in vocational education were invited to participate. A total of 24 people participated:

STATE LEADERSHIP ORGANIZATIONS

State Advisory Council on Vocational Education

John A. Beaumont, Chairman, State Advisory Council on Vocational Education (Florida)

William Bruce Howell, Executive Director, State Advisory Council on Vocational Education (Florida)

Council of Chief State School Officers

(Chose not to participate)

National Association of State Directors of Vocational Education

Carl Lamar, Assistant Superintendent for Vocational Education (Kentucky)

National Association of Research Coordinating Unit Directors

Ronald D. McCage, RCU Director (Illinois)
Garry Bice, RCU Director (Tennessee)

LOCAL LEADERSHIP ORGANIZATIONS

National Council of Local Administrators

Fred Miner, Assistant Superintendent (Lakewood Center, Washington)

American Association of School Administrators

Abram Friedman, Assistant Superintendent, Division of Career/Continuing Education (Los Angeles, California)

National Association of Large City Directors of Vocational Education

B. J. Stamps, Assistant Superintendent for Career Education (Dallas, Texas)

National Coordinating Council for Vocational Student Organizations

Mildred Reel, National Advisor—Future Homemakers of America (Washington, D.C.)

Proprietary Schools

(Chose not to participate)

COLLEGE AND UNIVERSITY LEADERSHIP

Junior Colleges

Dwight Davis, Dean, Joliet Junior College (Illinois)

Universities

Keith Goldhammer, College of Education, Michigan State University
Alfred H. Krebs, Acting Vice President for Academic Affairs, Virginia Polytechnic Institute

OTHER

American Personnel and Guidance Association

Edwin L. Herr, Pennsylvania State University

AIM/ARM

Joel E. Magisos, AIM/ARM, Center for Vocational Education, The Ohio State University

Project Baseline

Arthur M. Lee, Director

American Vocational Education Research Association
Jerome Moss, Jr., University of Minnesota

American Vocational Association, Inc.
Mary Ellis, Technical Education Research Center

U.S. Chamber of Commerce
Thomas P. Walsh, Associate Director, Education and Welfare

AFL/CIO
John A. Sessions, Assistant Director for Education

American Association of Community and Junior Colleges
Sandy Drake, Director, Research & Data Gathering Department

Network Council
Joseph Kelly, Director, Northeast Curriculum Coordinating Center

Council for Educational Development and Research, Inc.
John K. Coster, Center for Occupational Education (North Carolina)

ERIC Clearinghouse in Career Education
David Tiedeman, Northern Illinois University
Richard Erickson, Northern Illinois University

All witnesses were requested to supply the Committee with written testimony prior to the hearings. The Committee and its staff developed a set of preliminary questions to help participants organize their written comments. The questions solicited information on the management problems of vocational education R&D, issues requiring additional research, the role or functions of R&D, and evidence of the impact of R&D. Nearly all witnesses supplied the Committee with written responses.

Another major Committee effort was a survey conducted in September 1975. Committee members identified 16 people whose research was related to vocational education and who could cite significant contributions made by vocational education R&D over the last decade:

Garry R. Bice, Tennessee Research Coordinating Unit
Robert S. Campbell, Center for Vocational Education, Ohio State University

John Coster, Center for Occupational Education, North Carolina State University
Mary Ellis, President, American Vocational Association
Edwin L. Herr, Pennsylvania State University
Robert Hoppock, New York University
Ray E. Hosford, University of California, Santa Barbara
G. Brian Jones, American Institutes for Research
Jacob J. Kaufman, Pennsylvania State University
Mary B. Kievit, Rutgers University
Edward Morrison, Ohio State University
Jerome Moss, University of Minnesota
Herbert Parnes, Ohio State University
Merle E. Strong, University of Wisconsin
Grant Venn, Georgia State University
Louise Vetter, Center for Vocational Education, Ohio State University

A letter posing questions was mailed to these people, followed by a telephone interview conducted by the Committee's staff.

The Committee informally interviewed many other people who are directly or indirectly involved in vocational education R&D . Program officers from the Office of Education were consulted frequently. The staff attended meetings of the National Network for Curriculum Coordination in Vocational and Technical Education and a national meeting of the RCU directors. In addition, the Committee invited Garry Bice of the Tennessee RCU and Eugene Lehrmann, Wisconsin's Director of Vocational Education, to participate at some of its meetings as resource individuals. Finally, the Committee conducted two small surveys of the State Advisory Councils on Vocational Education in order to determine the extent of their involvement in R&D and to describe their relationships with the state RCUs. In all, more than 50 people were interviewed and many more were contacted by mail.

Appendix C
Priority Area and Project Type Section 4(c), Parts C, D, and I

TABLE C1 Sample of 149 Research Awards by Priority Areas, Section 4(c), Fiscal 1965-1969

	Annual Percentage of All Dollar Awards				
Priority Area	1965	1966	1967	1968	1969
Curriculum Development	32.0	30.2	4.0	53.9	16.4
Program Organization and Administration (RCUs)	21.6	32.8	36.3	6.4	41.6
Career Development, Guidance	3.1	7.9	8.9	0	1.0
Application of Manpower Data to Occupational Education	0	0	0	23.5	11.4
The Student and His Environment	0	0	0	1.1	5.2
Adult and Continuing Education	13.1	8.0	0	0	0
Program Evaluation	1.0	3.7	0.8	9.4	5.2
Personnel Recruitment and Development	11.2	15.9	10.9	0	0
Miscellaneous*	17.8	1.1	39.1	5.4	18.9
TOTAL	99.8	99.6	100.0	99.7	99.7

*This category includes such priority areas as the personal and social significance of work, instructional facilities, planning techniques, and R&D centers.

TABLE C2 Research Awards by Priority Areas, Part C, Fiscal 1971-1974

Priority Area	Percentage of Dollar Awards			
	1971	1972	1973	1974
Curriculum Development	43.2	0	0	26.3
State and Local Administration	13.7	0	0	0
Career Education, Guidance	27.8	100.0	100.0	19.8
Manpower Studies	9.4	0	0	26.7
Disadvantaged, Handicapped, and Minorities	0	0	0	10.4
The Student and His Environment	5.8	0	0	0
Work Experience	0	0	0	16.8
TOTAL	99.9	100.0	100.0	100.0

TABLE C3 Number of Projects Reporting Federal Activity Components in Federal Share Part D Funds, Fiscal 1970-1973

Activities	Number of Projects Reporting Participants	Percentage of 50 Projects
Elementary Activities	49	98
Junior High Activities	49	98
Senior High Activities		
Placement	37	74
Senior High Participating Teacher	31	62
Work Experience Programs	26	52
Job Entry Skill Training	23	46
Intensive Guidance and Counseling	22	44
Other Activities	7	14

NOTE: This table prepared by Development Associates (1975, p. 45).

TABLE C4 Percentage of Obligated Funds Attributed to Objectives, States' Share Part D, Fiscal 1970-1973

Objective	Year I	Year II	Year III
Occupational Familiarization	23	24	23
Work Experience	14	14	12
Guidance and Placement	13	12	13
Curriculum Improvement	25	26	25
Exchange of Personnel	7	7	6
Young Workers	4	4	4
Vocational Education Careers	7	8	9
Other	6	6	6

NOTE: This table prepared by Development Associates (1975, p. 146).

TABLE C5 Percentage of State's Share Part C Projects by Research Type

Fiscal Year	Research	Development	Demonstration	Evaluation	Dissemination	Other	Total
1971	31.6	28.4	2.6	13.1	5.3	19.0	100.0
1972	28.2	25.9	2.3	13.4	6.5	23.6	99.9
1973	31.5	25.4	0.6	9.6	7.1	25.8	100.0

NOTE: The data presented in Table C5 should be viewed as only an approximation since projects were classified solely on the basis of title reported by USOE. Categories are roughly as follows:

TITLE	CONTENTS
Research	Research, surveys, profiles
Development	Development, pilot projects, field tests
Demonstration	Demonstration
Evaluation	Evaluation, follow-up, accountability studies
Dissemination	Dissemination, training, workshops
Other	RCU operation, teaching programs, coordination, policy decision, administrative planning, management information systems, unknown.

TABLE C6 Research Awards by Project Type, Section 4(c), Fiscal 1965-1969

	Annual Percentage of All Dollar Awards					
Type	1965	1966	1967	1968	1969	Total
Experimental, Developmental, or Pilot	36.8	51.1	4.1	62.9	19.1	37.4
Research	27.9	31.6	16.8	23.4	48.5	31.9
Training	9.1	8.1	14.2	9.6	4.2	8.4
Research Coordinating Unit	17.8	9.2	35.7	4.0	12.6	14.1
National R&D Center	8.4	0	29.2	0	15.6	8.3
TOTAL	100.0	100.0	100.0	99.9	100.0	100.1

TABLE C7 Research Awards by Project Type, Federal Part C, Fiscal 1971-1974

	Annual Percentage of All Dollar Awards				
Type	1971	1972*	1973*	1974	Total
Experimental, Developmental, or Pilot	68.1	100.0	100.0	30.8	74.4
Research	11.9	0	0	67.9	17.2
Training	0.8	0	0	1.2	0.5
Curriculum Centers	19.2	0	0	0	7.8
TOTAL	100.0	100.0	100.0	99.9	99.9

*All projects funded in fiscal 1972 and 1973 were career education models.

TABLE C8 Part I Awards by Legislative Purpose (Percentage of Dollar Awards)

Fiscal Year	Curriculum Development and Dissemination	Standards for Curriculum Development	Coordinating States' Efforts	Survey Materials	Material Evaluation	Personnel Training	Total
1970	79.8	0	1.1	19.1	0	0	100.0
1971	82.5	0	0	3.2	0	14.3	100.0
1972	65.2	1.0	26.4	1.0	3.5	2.9	100.0
1973	73.5	3.8	22.7	0	0	0	100.0
1974	82.6	0	0	0	0	17.4	100.0
TOTAL	77.4	0.6	8.6	2.2	0.8	10.4	100.0

TABLE C9 Classification of Projects by Occupational Cluster, Part I, Fiscal 1972-1974

Cluster	1972	1973	1974	Total Number	Total Percentage
Agribusiness and Natural Resources	1	0	0	1	1.7
Business and Office	1	3	2	6	10.2
Communications and Media	0	0	0	0	0
Construction	0	0	0	0	0
Consumer and Homemaking	2	0	1	3	5.1
Environment	0	0	0	0	0
Fine Arts and Humanities	0	1	1	2	3.4
Health	0	1	0	1	1.7
Manufacturing	3	1	0	4	6.8
Marine Science	0	0	1	1	1.7
Marketing and Distribution	1	1	0	2	3.4
Personal Services	0	0	2	2	3.4
Public Service	0	0	0	0	0
Recreation and Hospitality	0	0	1	1	1.7
Transportation	0	0	0	0	0
Combination	20	6	10	36	61.0
TOTAL	28	13	18	59	100.1

References

Contract and grant numbers indicate contracts with the U.S. Office of Education, U.S. Department of Health, Education, and Welfare.

ED numbers indicate availability through the ERIC Clearinghouse in Career Education, Northern Illinois University, College of Education, 204 Gabel Hall, DeKalb, Illinois 60115.

The Center for Vocational Education was formerly called the Center for Vocational and Technical Education.

Adams, D. A. (1972) *Review and Synthesis of Research Concerning Adult Vocational and Technical Education.* Columbus, OH: The Center for Vocational Education, The Ohio State University.

Allen, D. (1968) *The Aviation Mechanics Project.* Contract OEC-6-85-043 with the University of California, Los Angeles. (ED 010 279)

Allen, D. (1975) *A Three-Year Follow-Up Study.* Los Angeles, CA: Division of Vocational Education, University of California.

American Institutes for Research and Quincy Public Schools (1964) *Development and Evaluation of an Experimental Curriculum for the New Quincy (Mass.) Vocational-Technical School.* Pittsburgh: American Institutes for Research.

Anderson, M. H. (1973) *Development and Validation of Instructional Programs for the Allied Health Occupations.* Grant OEG-0-8-080627-4672 to the University of California, Los Angeles. (ED 090 370)

Asbell, B. (1967) *New Directions in Vocational Education.* Washington, DC: U.S. Government Printing Office.

Ashmum, R. D. and Larson, R. A. (1970) *Review and Synthesis of Research on Distributive Education.* Columbus, OH: The Center for Vocational Education, The Ohio State University.

Bakamis, W. A., Kuhl, R. E., Hill, E. K., Swarthout, B. and Nish, D. L. (1966) *Identifica-*

tion of Task and Knowledge Clusters Associated with Performance of Major Types of Building Trades Work. Pullman: Washington State University.

Batmale, L. F. (1966) Project FEAST: A preparatory program for employment in hotels and restaurants. In C. Quirk & C. Sheehan, eds. *Research in Vocational and Technical Education*. Madison: University of Wisconsin, pp. 265-275.

Blake, J. F. (1975) Dissemination of Research and Development Products and Results in Vocational Education. Unpublished paper, Committee on Vocational Education R&D, National Research Council, Washington, DC.

Bowen, E. (1975) Factors Related to Teacher Assignment of Students to School Curricula. Unpublished doctoral dissertation. Urbana: University of Illinois.

Brownell, S. (1955) *U.S. Office of Education Handbook*. Washington, DC: U.S. Department of Health, Education, and Welfare.

Bushnell, D. S. (September 1967) An education system for the 70's. Paper presented at Aerospace Education Foundation Conference, Washington, DC.

Bushnell, D. S., and Rubel, R. G. (1968) A skill and a choice. *American Vocational Journal*, 43(6):31-33.

Carpenter, E. T. and Rodgers, J. H. (1970) *Review and Synthesis of Research in Agricultural Education*. Columbus, OH: The Center for Vocational Education, The Ohio State University.

The Center for Vocational Education (1975) *An Orientation to Career Education: Discussion Guides*. Revised edition. Columbus, OH: The Center for Vocational Education, The Ohio State University.

Christal, R. E. (1974) *The United States Air Force Occupational Research Project*. Brooks AFB, Texas: Air Force Human Resources Laboratory, Air Force Systems Command. (AFHRL-TR-73-75)

Clark, D. L. (1974) *Federal Policy in Educational Research and Development*. Columbus, OH: The Center for Vocational Education, The Ohio State University.

Council for Educational Development and Research, Inc. (no date) *Resources for R&D: Institutional Capability Statements of Eighteen Contractors*. Washington, DC: Council for Educational Development and Research, Inc.

Dallas County Community College District (1973) *A Survey of the Occupational and Educational Needs of the American Indian in Dallas County*. Austin: Texas Education Association. (ED 088 623)

Decker Associates (1967) *Information About the World of Work, Job Corpsmen, and High School Students*. Silver Spring, MD: Louis B. Decker Associates.

Development Associates (1975) *An Evaluation of Vocational Exemplary Projects*. Washington, DC: U.S. Department of Health, Education, and Welfare.

Eninger, M. U. (1965) *The Process and Product of T & I High School Level Vocational Education in the United States: The Product*. Volume 1. Pittsburgh: American Institutes for Research.

Eninger, M. U. (1968) *The Process and Product of T & I High School Level Vocational Education in the United States: The Process*. Volume 2. Pittsburgh: Educational Systems Research Institute.

Evans, R. N. and Galloway, J. D. (1973) Verbal ability and socioeconomic status of 9th and 12th grade college preparatory, general, and vocational students. *The Journal of Human Resources* 8(1).

Evans, R. N. and Terry, D. R. (1971) *Changing the Role of Vocational Teacher Education*. Bloomington, IL: McKnight and McKnight Publishing Company.

Fielstra, C. (1973) *The UCLA Secondary Schools Pilot and Demonstration Project for an*

Introduction to the Allied Health Careers, 1970-1973. A Summary Evaluative Report. University of California, Los Angeles. (ED 082 016)

Fitzpatrick, R., and Morrison, E. J. (1971) Performance and product evaluation. In R. L. Thorndike, ed. *Educational Measurement.* (2nd edition). Washington, DC: American Council on Education.

Frantz, N. R. (1967) The cluster concept. In C. Quirk & C. Sheehan, eds. *Research in Vocational and Technical Education.* Madison: University of Wisconsin, pp. 83-94.

Gagne, R. M. (1965) Educational objectives and human performance. In J. D. Krumboltz, ed. *Learning and the Educational Process.* Chicago: Rand McNally.

Garbin, A. P., Salomone, J. J., Jackson, D. P., and Ballweg, J. A. (1970) *Worker Adjustment Problems of Youth in Transition from High School to Work.* Columbus, OH: The Center for Vocational Education, The Ohio State University.

Goldhammer, K., and Taylor, R. E. (1972) *Career Education: Perspective and Promise.* Columbus, OH: Charles E. Merrill.

Grasso, J. T. (1972) The Contributions of Vocational Education, Training and Work Experience to the Early Career Achievements of Young Men. Unpublished doctoral dissertation, Ohio State University.

Griessman, B. E. and Densley, K. G. (1969) *Review and Synthesis of Research on Vocational Education in Rural Areas.* Columbus, OH: The Center for Vocational Education, The Ohio State University.

Guba, E. G. (1969) The failure of educational evaluation. *Educational Technology* 9(5):29-38.

Hale, J. A. (1971) *Review and Synthesis of Research on Management Systems for Vocational and Technical Education.* Columbus, OH: The Center for Vocational Education, The Ohio State University.

Hamilton, P. D. (1973) *Competency-Based Teacher Education.* Menlo Park, CA: Educational Policy Research Center, Stanford Research Institute.

Hamilton, P. D. (1975) Vocational Education Research and Development for Ethnic Minority Students. Unpublished paper. Committee on Vocational Education R&D, National Research Council, Washington, DC.

Harrington, F. W. and Doty, C. R. (1971) *Assessment of Micro-Teaching and Video Recording in Vocational and Technical Education, Phase VI-Feedback Techniques for In-service Technical Teacher Education.* Research and Development Series No. 60. Columbus, OH: The Center for Vocational Education, The Ohio State University.

Herr, E. L. (1975) Guidance and Counseling, Vocational Education Research and Development. Unpublished paper, Committee on Vocational Education R&D, National Research Council, Washington, DC.

Hjelm, H. F. and Boerrigter, G. C. (December 1974) The vocational education R&D program. Speech before the American Vocational Education Research Association, Denver, CO.

Holloway, L. D. and Kerr, E. E. (1969) *Review and Synthesis of Research in Health Occupations Education.* Columbus, OH: The Center for Vocational Education, The Ohio State University.

Householder, D. L. (1972) *Review and Evaluation of Curriculum Development in Industrial Arts Education.* Columbus, OH: The Center for Vocational Education, The Ohio State University.

Huffman, H., and Gust, D. D. (1970) *Business Education for the Emergent Office.* Columbus, OH: The Center for Vocational Education, The Ohio State University.

Impellitteri, J. T. and Finch, C. R. (1971) *Review and Synthesis of Research on Individual-*

izing Instructions in Vocational and Technical Education. Columbus, OH: The Center for Vocational Education, The Ohio State University.

Kaufman, J. J. and Lewis, M. V. (1968) *The Potential of Vocational Education: Observations and Conclusions.* University Park, PA: The Institute for Research on Human Resources, the Pennsylvania State University.

Kaufman, J. J., Schaefer, C. J., Lewis, M. V., Stevens, D. W., and House, E. W. (1967) *The Role of the Secondary Schools in the Preparation of Youth for Employment.* University Park, PA: Institute for Research on Human Resources, The Pennsylvania State University.

Kelley, S. C., Chirikos, T. N., and Finn, M. G. (1975) *Manpower Forecasting in the United States: An Evaluation of the State of the Art.* Columbus, OH: Center for Human Resource Research, The Ohio State University.

Kelley, P. S., Doty, C. R., Dalrymple, J. I., and Cotrell, C. J. (1971) *Assessment of Micro-Teaching and Video Recording in Vocational and Technical Teacher Education: Phase VIII—Remote Supervision of Home Economics Student Teachers.* Columbus, OH: The Center for Vocational Education, The Ohio State University.

Kievit, M. B. (1972) *Review and Synthesis of Research on Women in the World of Work.* Columbus, OH: The Center for Vocational Education, The Ohio State University.

Kievit, M. B. (1975) Vocational Education Research and Development as a Factor Influencing Teachers to Change Practice. Unpublished paper, Committee on Vocational Education R&D, National Research Council, Washington, DC.

Krumboltz, J. D. (1975) A social learning theory of CDM. In A. M. Mitchell, G. B. Jones and J. D. Krumboltz, eds. *A Social Learning Theory of Career Decision Making.* Palo Alto, CA: American Institutes for Research.

Krumboltz, J. D., Sheppard, L. E., Jones, G. B., Johnson, R. G., and Baker, R. D. (1967) *Vocational Problem-Solving Experiences for Stimulating Career Exploration and Interest.* Grant OE-5-85-059.

Krumboltz, J. D., Baker, R. D., and Johnson, R. G. (1968) *Vocational Problem-Solving Experiences for Stimulating Career Exploration and Interest: Phase II.* Grant OEG-4-070111.

Lanham, F. W., Lanham, C. P., Herschelmann, K. M., and Cook, F. S. (1972) *Development of Task Performance Statements for a New Office and Business Education Learning System* (NOBELS). Columbus, OH: The Center for Vocational Education, The Ohio State University.

Larson, M. E. (1969) *Review and Synthesis of Research: Analysis for Curriculum Development in Vocational Education.* Columbus, OH: The Center for Vocational Education, The Ohio State University.

Law, G. F. (1971) *Contemporary Concepts in Vocational Education.* Washington, DC: American Vocational Association. Chapter 7.

Lecht, L. A. (1972) *Policy Issues and Analytical Problems in Evaluating Vocational Education.* Center for Priority Analysis, National Planning Association. Washington, DC: U.S. Department of Health, Education, and Welfare.

Lecht, L. A. (1974) *Evaluating Vocational Education—Policies and Plans for the 1970's.* New York: Praeger Publishers.

Lee, A. M. (1975) *Learning a Living Across the Nation.* Volume 4. Project Baseline Fourth National Report. Flagstaff: Northern Arizona University.

Lockette, R. E. and Davenport, L. F. (1971) *Review and Synthesis of Research on Vocational Education for the Urban Disadvantaged.* Columbus, OH: The Center for Vocational Education, The Ohio State University.

Magisos, J. H. (1975) Unpublished written testimony prepared for the Committee on Vocational Education R&D, National Research Council, Washington, DC.

Maxwell, D. K., Brown, A. J., and McCracken, J. D. (1973) *Career Education: Curriculum Materials for the Disadvantaged.* Columbus, OH: The Center for Vocational Education, The Ohio State University.

McClelland, W. A. (1970) Simulation, can it benefit vocational education? *American Vocational Journal*, 45:23-25.

Mead, M. A. (1972) RCMAT—A FORTRAN program to calculate relatedness coefficients among stimulus words by comparing lists of verbal responses to the stimuli. *Behavioral Science* 17:568.

Melching, W. H., and Borcher, S. D. (1973) *Procedures for Constructing and Using Task Inventories.* Washington, DC: U.S. Government Printing Office.

Mitchell, A. M. (1975) Analysis and synthesis of CDM literature as related to this theory. In A. M. Mitchell, G. B. Jones and J. D. Krumboltz, eds. *A Social Learning Theory of Career Decision Making.* Palo Alto, CA: American Institutes for Research.

Mitchell, A. M., Jones, G. B., and Krumboltz, J. D. (1975) *A Social Learning Theory of Career Decision Making.* Palo Alto, CA: American Institutes of Research.

Morrison, E. J. (1968) Some problems in developing curricula by analysis of performance objectives. *National Business Education Quarterly* 36(3):23-27.

Morrison, E. J. (1970) Trends in vocational-technical education and curriculum. *Vocational Guidance Quarterly* 18:243-248.

Morrison, E. J. and Lecznar, W. B. (1966) *The Sequencing of Learning Units.* Pittsburgh: American Institutes for Research.

Moss, J., Jr. (1971) Assumptions underlying pre-service programs for beginning level vocational teachers. In R. N. Evans and D. R. Terry, eds. *Changing the Role of Vocational Teacher Education.* Bloomington, IL: McKnight and McKnight Publishing Co.

Moss, J., Jr., Pucel, D. J., Smith, B. B., and Pratzner, F. C. (1970) An empirical procedure for identifying the structure of the technical concepts possessed by selected workers. In B. B. Smith & J. Moss, Jr., eds. *Process and Techniques of Vocational Curriculum Development.* Minneapolis: Minnesota Research Coordinating Unit, for Vocational Education, University of Minnesota.

Moss, J., Jr., and Stromsdorfer, E. W. (1971) Evaluating vocational and technical education programs. In G. G. Somers and J. K. Little, eds. *Vocational Education: Today and Tomorrow.* Madison, WI: University of Wisconsin Press.

Nelson, H. Y. (1970) *Review and Synthesis of Research on Home Economics Education.* Columbus, OH: The Center for Vocational Education, The Ohio State University.

Oaklief, C. (1971) *Review and Synthesis of Research on Vocational and Technical Education for the Rural Disadvantaged.* Columbus, OH: The Center for Vocational Education, The Ohio State University.

Perkins, E. A., Jr., Byrd, R. F., and Roley, D. E. (1968) *Clusters of Tasks Associated with Performance of Major Types of Office Work.* Pullman: Washington State University.

Perryman, B. C. (May 20, 1975) *The Continuation of Funding for the Mountain-Plains Program at Glasgow AFB, Montana.* Testimony before Appropriations Subcommittee, State, Justice, Commerce, and Judiciary, House of Representatives.

Persons, E. A., Swanson, G. I., Kittleson, H. M., and Leske, G. W. (1968) *An Economic Study of the Investment Effects of Education in Agriculture.* Office of Education, Bureau of Research. Washington, DC: U.S. Department of Health, Education, and Welfare.

Peterson, R. L. (1973) *Review and Synthesis of Research in Vocational Teacher Education.* Columbus, OH: The Center for Vocational Education, The Ohio State University.

Phillips, D. S. and Briggs, L. D. (1969) *Review and Synthesis of Research in Technical*

Education. Columbus, OH: The Center for Vocational Education, The Ohio State University.

Phipps, L. and Evans, R. N. (1968) Curriculum development. *Review of Educational Research*. 38:367-381.

Price, R. G. and Hopkins, C. R. (1970) *Review and Synthesis of Research in Business and Office Education*. Columbus, OH: The Center for Vocational Education, The Ohio State University.

Public Law 64-347 (1917) Vocational Education Act of 1917 (Smith-Hughes Act). 39 Stat. 929.

Public Law 531 (1954) *An Act to Authorize Cooperative Research in Education*. 68 Stat. 533 et. seq.

Public Law 88-210 (1963) *Vocational Education Act of 1963*. 77 Stat. 403 et. seq.

Public Law 90-576 (1968) *Vocational Education Amendments of 1968*. 82 Stat. 1064.

Roby, P. A. (1975) Vocational Education and Women. Unpublished paper, the Committee on Vocational Education R&D, National Research Council, Washington, DC.

Roby, P. A. (1976) Toward full equality: more job education for women. *The School Review* 84(2):181-212.

Roney, M. (1971) *Development and Evaluation of Educational Programs in Electro Mechanical Technology*. Technical Education Research Center, Inc. (ED 012 372)

E. F. Shelley and Company (1968) *An Educational System for the Seventies*. Washington, DC: E. F. Shelley.

Schill, W. J. and Allen, D. (1974) *An Analysis of Vocational Teacher Education Conducted by the Division of Vocational Education, University of California*. Los Angeles: University of California Printing Office.

Schill, W. J. and Arnold, J. P. (1965) *Curricula Content for Six Technologies*. Urbana: University of Illinois.

Simpson, E. (1975) Curriculum Development in Vocational-Technical Education: The Part I Program. Unpublished paper, Committee on Vocational Education R&D, National Research Council, Washington, DC.

Sjogren, D. D. (1969) A functional approach to curriculum development. In J. W. Cunningham, ed. *The Job-Cluster Concept and Its Curricular Implications*. Raleigh, NC: Center for Occupational Education, North Carolina State University.

Sjogren, D. D. (1971) *Review and Synthesis of Research on Occupational Adaptability*. Columbus, OH: The Center for Vocational Education, The Ohio State University.

Sjogren, D. D. (1971a) Evaluation of Vocational Teacher Education. In R. N. Evans and D. R. Terry, eds. *Changing the Role of Vocational Teacher Education*. Bloomington, IL: McKnight and McKnight Publishing Co.

Sjogren, D. D. and Sahl, R. (1966) *Review of Research on Common Job Behaviors*. Fort Collins: Colorado State University.

Sjogren, D. D., Schroeder, W. and Sahl, R. (1967) *The Identification of Common Behavioral Factors as Basis for Pre-entry Preparation of Workers for Gainful Employment*. Fort Collins: Colorado State University.

Somers, G. (1971) Critique of manpower projections for instructional staff in vocational education. In R. N. Evans and D. R. Terry, eds. *Changing the Role of Vocational Teacher Education*. Bloomington, IL: McKnight and McKnight Publishing Co.

Southwide Research Coordinating Council (1975) *Educational Impact*. Frankfort, KY: Southwide Research Coordinating Council.

Stacey, W. D. (1974) CODAP: *Control Card Specifications for the* UNIVAC *1108*. Brooks AFB, Texas: Air Force Human Resources Laboratory, Air Force Systems Command.

Stromsdorfer, E. W. (1972) *Review and Synthesis of Cost-Effectiveness Studies of Vocational*

and Technical Education. Columbus, OH: The Center for Vocational Education, The Ohio State University.

Strong, M. E. and Jarosik, D. (1975) The Status of Research Capability in Vocational Education Research and Development. Unpublished paper, Committee on Vocational Education R&D. National Research Council, Washington, DC.

Stutz, R. C. and Merrell, R. G., eds. (1967) *Educating Rural Youth for Success in the World of Work*. Salt Lake City, Utah: Western States Small School Project.

Sutherland Associates (1974) *The Kingdom of Could Be You*. Film. Los Angeles.

Swanson, G. I. (1974) The Preparation of Teachers for Vocational Education. Project Baseline Supplemental Report, Washington, DC: Technical Education Research Centers, Inc.

Taylor, J. E., Montague, E. K., and Michaels, E. R. (1972) *An Occupational Clustering System and Curriculum Implications for the Comprehensive Career Education Model*. Alexandria, VA: Human Resources Research Organization.

Tennyson, W. (1968) Career development. *Review of Education Research* 38:346-366.

Terry, A. S., Ashley, N., Kopp, L., and Shellberg, K. (1975) *Electro-mechanical Trouble Shooting*. Columbus, OH: The Center for Vocational Education, The Ohio State University.

U.S. Department of Health, Education, and Welfare (1963) *Education for a Changing World of Work. Report of the Panel of Consultants on Vocational Education*. Washington, DC: U.S. Department of Health, Education, and Welfare.

U.S. Department of Health, Education, and Welfare (1969) *Educational Research and Development in the United States*. Bureau of Research, Office of Education. Washington, DC: U.S. Department of Health, Education, and Welfare.

U.S. Department of Health, Education, and Welfare (1973) *Building Capacity for Renewal and Reform*. National Institute of Education. Washington, DC: U.S. Department of Health, Education, and Welfare.

U.S. Department of Health, Education, and Welfare (1974) Statement prepared for Congressional oversight hearings. U.S. Office of Education. Washington, DC: U.S. Department of Health, Education, and Welfare.

U.S. Department of Health, Education, and Welfare (1975) *Program Plan for Fiscal Year 1975*. National Institute of Education. Washington, DC: U.S. Department of Health, Education, and Welfare.

Wallace, H. R. (1970) *Review and Synthesis of Research on Cooperative Vocational Education*. Columbus, OH: The Center for Vocational Education, The Ohio State University.

Walsh, J. and Breglio, V. J. (1976) *An Assessment of School Supervised Work Education Programs*. Contract OEC-0-74-8718 with Olympus Research Corporation, San Francisco, CA.

Warmbrod, C. P. (1970) *Review and Synthesis of Literature on Residential Schools in Vocational and Technical Education*. Columbus, OH: The Center for Vocational Education, The Ohio State University.

Wenig, R. E. and Wolansky, W. D. (1972) *Review and Synthesis of Literature on Job Training in Industry*. Columbus, OH: The Center for Vocational Education, The Ohio State University.

Wenrich, R. C. (1970) *Review and Synthesis of Research on the Administration of Vocational and Technical Education*. Columbus, OH: The Center for Vocational Education, The Ohio State University.

Young, R. C., Clive, W. V., and Miles, B. E. (1972) *Vocational Education Planning: Manpower, Priorities and Dollars*. Columbus, OH: The Center for Vocational Education, The Ohio State University.