DOCUMENT RESUME

ED 126 343 CE 007 479

TITLE Fireman: Naval Rate Training Manual and Nonresident Career Course.

INSTITUTION Naval Education and Training Command, Pensacola, Fla.

REPORT NO NAVEDTRA-10520-E

PUB DATE 76

NOTE 248p.; Photographs will not reproduce in microfiche

AVAILABLE FROM Superintendent of Documents, U.S. Government Printing Office, Washington, D.C. 20402 (Stock Number 0502-LP-052-6010)

EDRS PRICE MF-$0.83 HC-$12.71 Plus Postage.

DESCRIPTORS *Engineering; *Engineering Technicians; Engines; *Equipment Maintenance; Fluid Power Education; Hydraulics; *Job Training; Manuals; *Occupational Information; Ocean Engineering; *Study Guides

IDENTIFIERS *Navy

ABSTRACT

The Rate Training Manual and the Nonresident Career Course (RTM/NRCC) was prepared to assist the fireman apprentice to qualify and to advance to fireman in the Navy. The manual is designed for individual study and provides subject matter that relates directly to the occupational qualifications of the fireman rating. Fireman is one of the lower ratings in the engineering department, which is organized for the efficient operation, maintenance, and repair of the ship's propulsion plant, auxiliary machinery, and piping systems. The areas covered include: (1) administrative and operational functions of the engineering department; (2) various laws and phenomena of nature related to engineering fundamentals; (3) principles and types of ship propulsion; (4) areas of operation in basic steam cycles; (5) operating principles of boilers; (6) components of the steam turbines and reduction gears; (7) location and function of auxiliary machinery and equipment; (8) measurement instruments; (9) pumps, valves, and piping; (10) different shipboard electrical equipment; (11) internal combustion engines; and (12) engineering watches and duties. A glossary of engineering terms and the metric system are appended and an index is included. A series of six assignments is provided in the NRCC to assist the student through the training manual. (Author/EC)

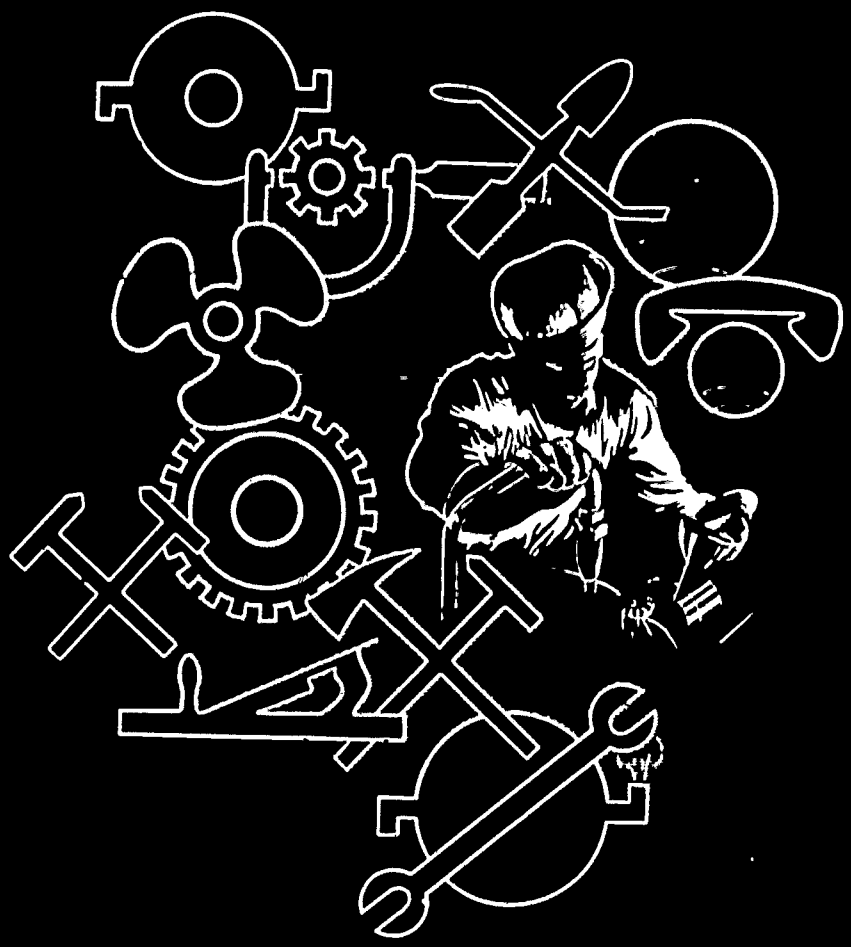

FIREMAN

NAVAL EDUCATION AND TRAINING COMMAND

RATE TRAINING MANUAL
AND NONRESIDENT CAREER COURSE

NAVEDTRA 10520-E

PREFACE

This Rate Training Manual and the Nonresident Career Course (RTM/NRCC) has been prepared to assist the Fireman Apprentice to qualify and to advance to Fireman. Study of this training manual should be combined with practical experience, with study and review of other applicable Rate Training Manuals, and with study of manufacturers' technical manuals, *NavShips Technical Manual*, and other applicable material.

Designed for individual study and not formal classroom instruction, the RTM provides subject matter that relates directly to the occupational qualifications of the Fireman rating. The NRCC provides the usual way of satisfying the requirements for completing the RTM. The set of assignments in the NRCC includes learning objectives and supporting items designed to lead students through the RTM.

As one of the Rate Training Manuals, *Fireman* and the NRCC has been prepared by the Naval Education and Training Program Development Center, Pensacola, Florida, for the Chief of Naval Education and Training. Information provided by numerous manufacturers, publishers, and associations is gratefully acknowledged. Technical assistance has been provided by the Naval Sea Systems Command, Service School Command, San Diego, and the Service School Command, Great Lakes.

Revised 1976

Stock Ordering No.
0502-LP-052-6010

Published by
NAVAL EDUCATION AND TRAINING SUPPORT COMMAND

UNITED STATES
GOVERNMENT PRINTING OFFICE
WASHINGTON, D.C.: 1976

THE UNITED STATES NAVY

GUARDIAN OF OUR COUNTRY

The United States Navy is responsible for maintaining control of the sea and is a ready force on watch at home and overseas, capable of strong action to preserve the peace or of instant offensive action to win in war.

It is upon the maintenance of this control that our country's glorious future depends; the United States Navy exists to make it so.

WE SERVE WITH HONOR

Tradition, valor, and victory are the Navy's heritage from the past. To these may be added dedication, discipline, and vigilance as the watchwords of the present and the future.

At home or on distant stations we serve with pride, confident in the respect of our country, our shipmates, and our families.

Our responsibilities sober us; our adversities strengthen us.

Service to God and Country is our special privilege. We serve with honor.

THE FUTURE OF THE NAVY

The Navy will always employ new weapons, new techniques, and greater power to protect and defend the United States on the sea, under the sea, and in the air.

Now and in the future, control of the sea gives the United States her greatest advantage for the maintenance of peace and for victory in war.

Mobility, surprise, dispersal, and offensive power are the keynotes of the new Navy. The roots of the Navy lie in a strong belief in the future, in continued dedication to our tasks, and in reflection on our heritage from the past.

Never have our opportunities and our responsibilities been greater.

CONTENTS

CREDITS

The illustrations indicated below are included in this edition of Fireman through the courtesy of the designated companies, publishers, and associations. Permission to use these illustrations is gratefully acknowledged. Permission to reproduce these illustrations and other materials in this publication should be obtained from the source.

Source	Figures
Babcock & Wilcox Company	6-16C
Buffalo Meter Company	9-16, 9-17
Cooper-Bessemer Corporation	4-12
Crane Company	10-15
Crosby Valve & Gage Company	9-6
General Electric Company	7-14, 7-15, 11-2, 11-3
General Motors Corporation	12-6
Detroit Diesel Engine Division	4-13
Electro-Motive Division	4-8
James G. Biddle Company	9-21, 9-22
Jones Motorola Company	9-20
Manning, Maxwell & Moore, Inc.	9-1, 9-2, 9-3, 9-4, 9-5
U.S. Naval Institute	5-4, 7-5, 7-6, 7-7, 7-11, 7-12, 7-13, 7-16, 8-5, 8-6, 8-7, 8-8, 9-7, 9-8, 9-11, 9-12, 9-13, 9-23, 10-9, 10-16, 10-17, 10-24, 10-27, 10-28, 10-29, 10-31
Westinghouse Electric Corporation	5-3, 7-10, 9-19

CHAPTER 1

PREPARING FOR ADVANCEMENT

Study of this training manual will start you on your way to earning one of the Engineering and Hull ratings. (See fig. 1-1.) This training manual is one of several which will help you meet the technical requirements for advancement.

As a member of the engineering department aboard ship, you know that you are assigned to the heart of the ship. It is through your efforts and the efforts of every other member of the department that your ship becomes alive and is able to meet its commitments anywhere on the oceans of the world.

RATE OF FIREMAN

A Fireman is basically an engineering trainee who must perform a wide variety of tasks. Some of these tasks may seem quite unnecessary although there is a very distinct reason for the tasks you will be required to perform. The reason, even though it sometimes may be unclear, is to increase the operational readiness of the ship and to further your training. Everyday throughout your Navy career, you will learn something new to increase your knowledge and to make you more valuable to yourself and to the Navy.

You must be able to serve as a competent assistant to the petty officers holding any of the 10 ratings in the engineering department. (These ratings are discussed in chapter 2 of this training manual.) You will learn to operate pumps, motors, and turbines; to read gages and thermometers; to maintain and clean engines, machinery, and compartments; and to identify refrigeration equipment, anchor windlasses, distilling plants, and compressors. You will be required to perform preventive and corrective maintenance in accordance with the 3-M system. (For additional information on this system, refer to *Basic Military Requirements*, NAVEDTRA 10054-D, Chapter 16.) You will also stand security and fire watches in engineering spaces, act as a boat engineer, take part in drills, and perform the duties of damage control repair party telephone-talker and messenger.

You may ask yourself the question, "How am I ever going to learn to do all these jobs?" In the beginning, you will work with the petty officer who is responsible for seeing that a specific job is done properly. He will show you exactly how to perform every detail of each operation. Then he will have you do the job under his supervision. Finally, when he has confidence in you and your ability to do the job, he will give you the opportunity to perform on your own. This general procedure will be observed throughout your entire period as a striker.

In addition to meeting these requirements, you will also be required to have a basic knowledge of mathematics and blueprint reading. Sources of information which will be useful in learning about these subjects are listed later in this chapter.

ADVANCEMENT AND ELIGIBILITY REQUIREMENTS

Before you can advance in rate, you must fulfill certain military and professional requirements.

Naval requirements for advancement are those general standards applicable to all enlisted

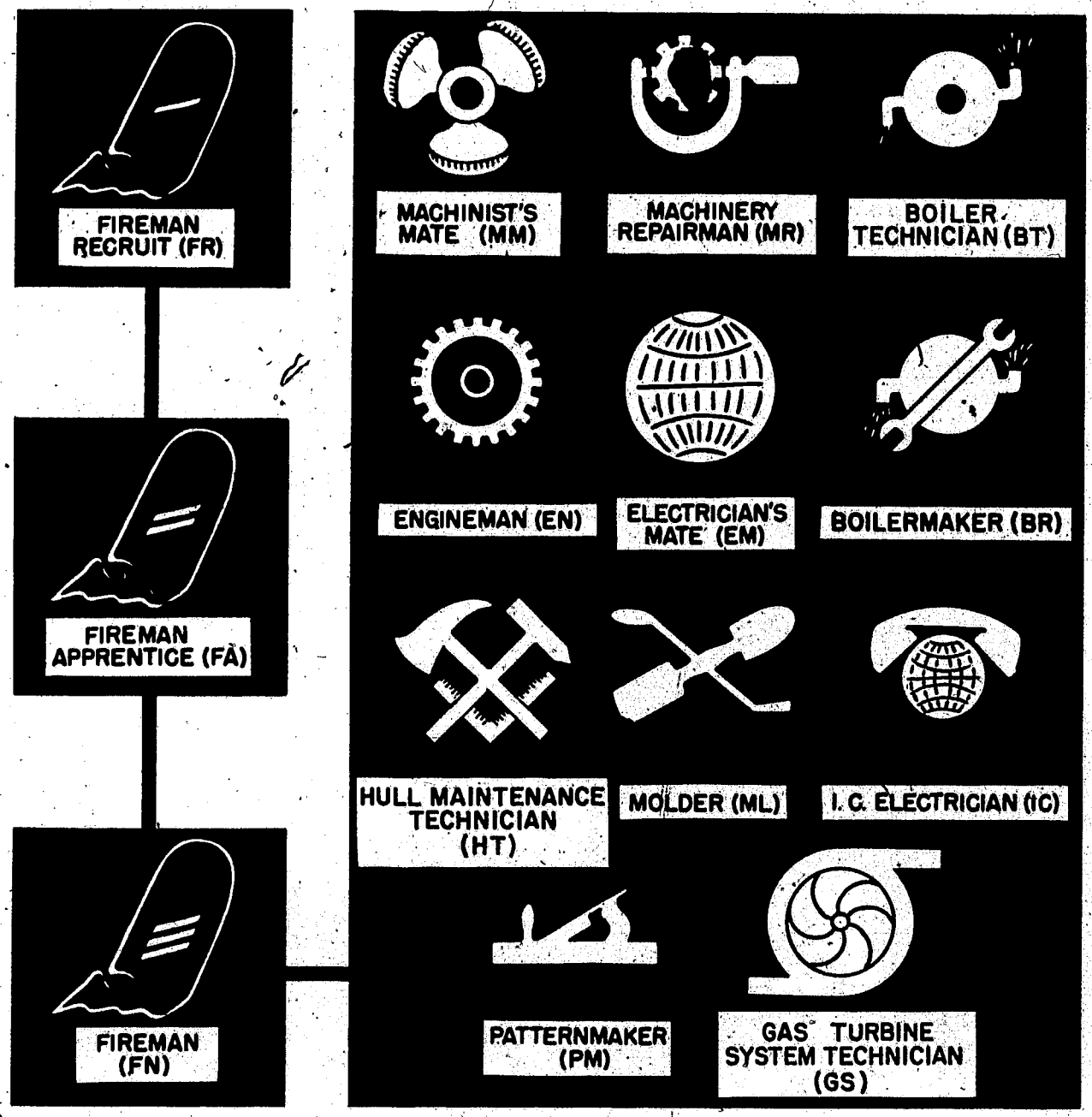

3.10

Figure 1-1.—Engineering and Hull Ratings.

personnel, such as watch standing, first aid, and military conduct. You must show that you are proficient in each of the naval standards specified for the next higher pay grade. These are discussed in *Basic Military Requirements*, NAVEDTRA 10054-D.

Professional requirements for advancement are technical standards that are directly related to the work of each rating.

Both the naval requirements and the professional requirements are divided into subject matter groups, which are further subdivided into practical factors and knowledge factors. Practical factors are things that you must be able to do. Knowledge factors are the minimum things you must know in order to perform your duties.

The professional and naval requirements just discussed are listed in the *Manual of Navy Enlisted Manpower and Personnel Classifications and Occupational Standards*, NavPers 18068-D (with changes). This manual provides the minimum requirements for advancement to each pay grade within each rating.

The standards for Fireman form the basis for this manual and they were current at the date of this printing. However, the standards change occasionally, and the questions in the advancement examinations for all pay grades are based on the latest revision. Consequently, long before taking an examination for advancement, you should check for revisions and assure yourself that your knowledge covers all the latest standards.

A special form known as the RECORD OF PRACTICAL FACTORS, NAVEDTRA 1414/1, is used to keep a record of your practical factor standards. The form lists all practical factors, both military and professional. As you demonstrate your ability to perform each practical factor, appropriate entries are made in the DATE and INITIALS columns by the division officer or your supervising petty officer.

Since changes are made periodically to the *Manual of Navy Enlisted Manpower and Personnel Classifications and Occupational Standards*, revised forms of NAVEDTRA 1414/1 are provided when necessary. Extra space is provided on the Record of Practical Factors for entering additional practical factors as they are published in changes to the *Occupational Standards Manual*. The Record of Practical Factors also provides space for recording demonstrated proficiency in skills which are within the general scope of the rating but which are not identified as minimum occupational standards.

If you are transferred before you qualify in all practical factors, the NAVEDTRA 1414/1 is forwarded with your service record to your next duty station. You can save yourself a lot of trouble by making sure that this form is actually inserted in your service record before you are transferred. If the form is not in your service record, you may be required to start all over again and requalify in the practical factors which have already been checked off.

The Navy has established certain requirements that must be met before you are eligible to take the examination for advancement. You must—

First: Meet basic requirements, such as length of service in pay grade and total service.

Second: Have a statement in your service record that you satisfactorily performed the practical factors for the next higher pay grade.

Third: Have a statement in your service record that you successfully completed the training manual for the next higher level of advancement.

Fourth: Be recommended by your commanding officer.

When you satisfy all of these requirements, you are eligible to participate in the examination. If you pass the examination with a high enough score, your commanding officer has the authority to advance you in rate.

SOURCES OF INFORMATION

The Navy has set definite limits on the material for which you are accountable on the examination. The sources from which examination items are taken are listed in the *Bibliography for Advancement*, NAVEDTRA 10052. This bibliography is available on your ship or station. It is revised annually, so be sure

to consult the current edition. It provides the titles of publications and sections of publications that you should study when preparing for the examination. The publications listed contain material covering all the standards listed in the *Occupational Standards Manual*. An asterisk (*) identifies the training manual or manuals that you must complete before you can be eligible to take the examination for advancement.

One of the most useful things you can learn about a subject is how to find out more about it. No single publication can give you all the information you need to know to perform your duties. Basic training manuals which will be helpful to you as you prepare for advancement are listed below. Your petty officers will assist you in obtaining other sources of information.

Tools and Their Uses, NAVEDTRA 10085-B

Blueprint Reading and Sketching, NAVPERS 10077-D

The glossary section in the Appendix of this training manual is another good source of information. Unfamiliar or difficult to understand engineering terminology which has been used throughout this text is defined in this section.

REWARDS OF ADVANCEMENT

Each time you advance, you receive many rewards. These rewards include higher pay and allowances together with additional pension benefits when you retire. But the really important gains are opportunities for more interesting and challenging assignments, increased respect from your superiors as well as from the men you supervise or help, and the chance for greater fulfillment of your abilities. Above all, you are afforded the opportunity to serve your command, your Navy, and your country at a higher level of responsibility in a more important job.

As a member of the United States Navy, you have the satisfaction of knowing that, as you advance, you are serving your country in a most important way. Do your job well at all times, and take pride in what you do and how you do it. Service to your country is a special privilege. You must make every endeavor to serve with honor.

Tradition, valor, and victory are the Navy's heritage. The long history of outstanding achievements and noble service of the Navy provide an inspiration and a challenge to you and your shipmates. It is up to you to help maintain and enlarge the prestige and the traditions of the naval service.

CHAPTER 2

ENGINEERING DEPARTMENT

The engineering ratings cover all phases of operation, maintenance, and repair of machinery and equipment under the cognizance (control) of the engineering department. To fully understand the nature of your new assignments as a Fireman, you must understand the organization of the engineering department and be familiar with the scope of each Group VII (Engineering and Hull) Rating.

In this chapter we shall discuss the administrative and operational functions of the engineering department and the Group VII Ratings.

ORGANIZATION OF ENGINEERING DEPARTMENT

The engineering department is organized for the efficient operation, maintenance, and repair of the ship's propulsion plant, auxiliary machinery, and piping systems. In addition, the engineering department is responsible for (1) the control of damage, (2) the operation and maintenance of electric generators and distribution systems, (3) repair to the ship's hull, and (4) for general shipboard repairs.

The organization of the engineering department is established by the ship's organization book. This organization is made up of a number of divisions whose functions are discussed later in this chapter.

The organization of the department will vary according to the size of the ship and the engineering plant. Forces afloat, which are primarily concerned with repairs, will have a repair department consisting of many of the engineering ratings, in addition to an engineering department which will be concerned with the operation and maintenance of the propulsion plant of the repair ship or tender. Smaller ships, because of the smaller number of engineering ratings aboard, will combine many ratings into a single division.

Figure 2-1 shows the organization structure of the engineering department aboard a large ship and the functions of the various divisions of the department. Remember that this organization does not represent a particular type or class of ship. It should be noted that the administrative assistant, the department training officer, and the special assistants are aides to the engineer officer and these responsibilities are often assigned as additional duties to officers functioning in other capacities at any of the levels in the direct chain of command.

The three principal assistants to the engineer officer are the main propulsion assistant, the damage control assistant, and the electrical officer. Each of these assistants, in turn, administers those divisions assigned as indicated on the organization chart.

The division officer is responsible for the organization of his division. The Watch, Quarter, and Station Bill reflects the organization of the division by sections and shows the assignments for all emergency drills. The billets assigned depend upon the complement of the division and the capability of personnel assigned to the division.

ENGINEER OFFICER

The engineer officer is the head of the engineering department. In addition to the duties of a department head, the engineer officer

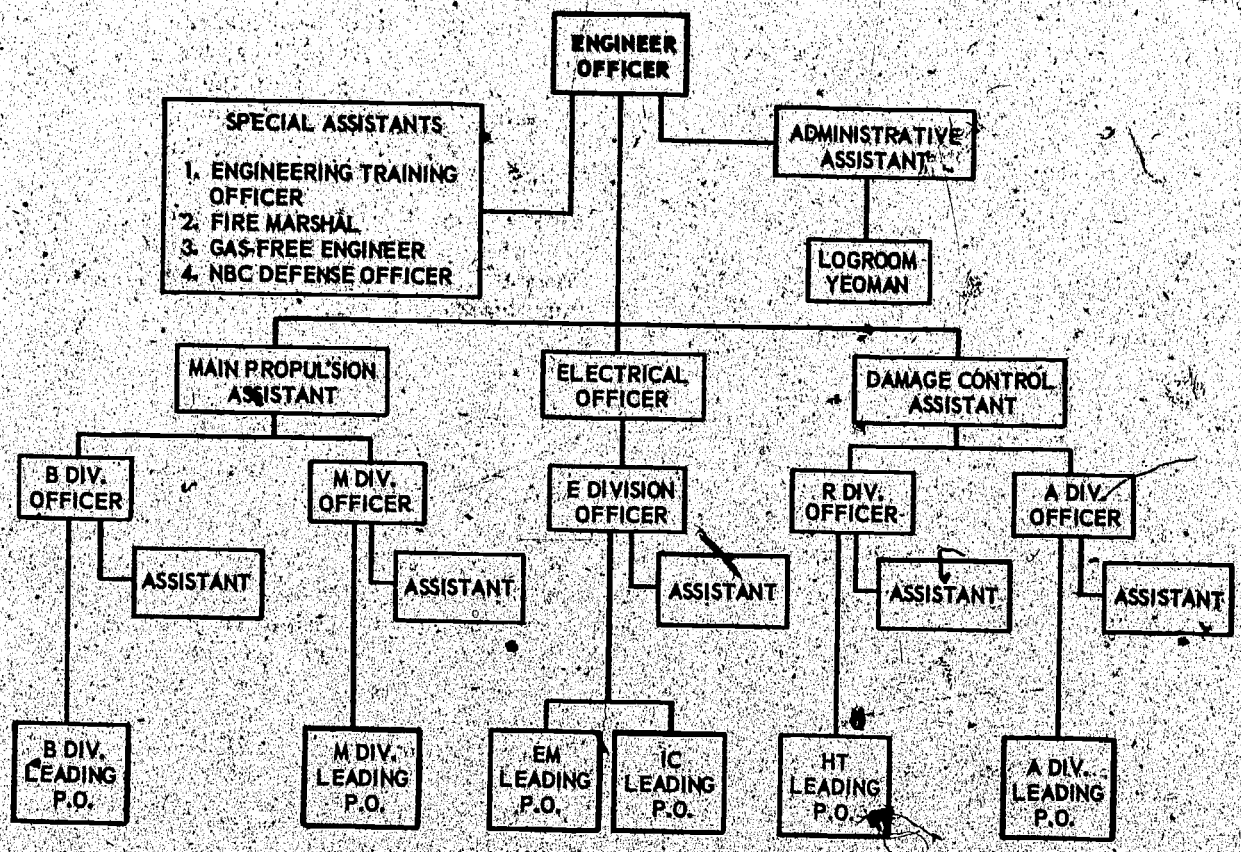

27.2

Figure 2-1.—Typical engineering department organization.

is responsible for the operation, care, and maintenance of all propulsion and auxiliary machinery; the control of damage; and the accomplishment of repairs within the capacity of the shops in the engineering department.

Detailed information concerning the duties and responsibilities of the engineer officer are given in *U.S. Navy Regulations*, and in your *Ship's Organization and Regulations Manual*.

DEPARTMENT ADMINISTRATIVE ASSISTANT

The department administrative assistant functions as an aide to the engineer officer in the details of administration. His responsibilities and duties are as follows:

1. To supervise the operation of the department administrative office, ensuring the maintenance of assigned office spaces and the care and upkeep of office equipment.

2. To train, supervise, and direct the department Yeomen.

3. To screen all incoming correspondence routed to the engineer officer and initiate required action when appropriate; to screen and ensure correct preparation of all outgoing correspondence.

4. To assist in the preparation of all department directives and, following release by the engineer officer, exercise control over their issuance.

5. To supervise the maintenance of department records and maintain a tickler file on all required reports.

6. To coordinate the preparation of the department in-port daily watch bill.

7. To assign tasks to, and evaluate the performance of department Yeoman and other enlisted personnel assigned to the department office.

In an engineering department where an administrative assistant billet is not provided within the framework of the ship's organization, the engineer officer may delegate the duties of such a billet to any competent person.

DEPARTMENT TRAINING OFFICER

The duties of a department training officer are generally performed by the engineer officer, or an assistant to the engineer officer. Some of these duties are:

1. To develop a department training program in support of the training objectives of the ship.

2. To implement approved training plans and policies within the department.

3. To coordinate and assist in the administration of division training programs within the department, including: (a) supervision of the preparation of training materials and review of curricula, training courses, and lesson plans; (b) assist in the selection and training of instructors; (c) observation of instruction given at drills, on watch, on station, and in the classroom, followed by recomendations to the engineer officer; (d) procurement, through the ship's training officer, of required training aids and devices including films, projectors, training courses, and books.

4. To maintain department training records and training reports.

5. To disseminate information concerning the availability of fleet and service schools.

6. To initiate requisitions for training supplies and materials, subject to the approval of the engineer officer.

MAIN PROPULSION ASSISTANT

The main propulsion assistant is responsible, under the engineer officer, for the operation, care, and maintenance of the ship's propulsion machinery and related auxiliaries. He has cognizance over the care, stowage, and use of fuels and lubricating oils. The preparation and care of the Engineering Log and Bell Book are the responsibility of the main propulsion assistant, as is the preparation of operation and maintenance records and procedures.

Machinery Division

If you are assigned to the M division, you will probably work in one of the enginerooms. Normally, there is one engine for each of the ship's propellers. On ships with two or more enginerooms, the enginerooms are generally located immediately aft of the firerooms which supply them with steam. In an emergency, any engineroom can be isolated while the ship continues underway on the remaining engines.

Boiler Division

The B division operates the boilers and the auxiliary fireroom machinery. If you are assigned to this division, your duty station may be one of the firerooms. The firerooms are usually located amidships on the lower levels. There may be as many as 6 or 8 firerooms, depending on the size and type of ship. In ships having more than one fireroom, each fireroom generally has two boilers installed either facing each other, or side by side. The boilers are so arranged that any number of them can be used to supply steam to the ship's engines. The firerooms are separated by watertight bulkheads so that any fireroom may be sealed off while the ship operates on the remaining boilers.

On your first trip through the fireroom you may wonder why there are so many lines and valves. You will become familiar with a few of them at a time, and by paying strict attention you will gradually learn how all of them are used.

Steam, water, fuel oil, or air may be carried in these lines. The lines which carry steam or water are covered by insulation and lagging for

personnel safety and to prevent heat loss and condensation. Lines are stenciled to indicate the fluid carried and the direction of flow.

These lines do not run through the ship at random, but connect the units of the systems according to a definite plan. In the course of your training you will trace these lines from one unit to another throughout each system. The ship's blueprints and drawings are of particular value in tracing out systems in the engineering plant.

DAMAGE CONTROL ASSISTANT

The damage control assistant is responsible, under the engineer officer, for the prevention and control of damage, including control of stability, list, and trim. Conditions of closure, watertight integrity, and compartment testing are carried out under his supervision. The damage control assistant (DCA) administers the training of the ship's personnel in damage control, firefighting, emergency repair work and nonmedical defensive measures against NBC attack. The hull maintenance shops and the machine shop are under the cognizance of the DCA. In these shops, all necessary repairs to the hull and the ship's boats, within the shop's capacities, are made by the assigned personnel.

Auxiliary Division

Personnel of A division operate the refrigeration plant, air compressors, emergency fire pumps, emergency diesel generators, and the ventilation, heating, and air conditioning systems. They are the boat engineers in small boats and maintain the ship's steering engines. If you are assigned to this division, you may be stationed in the auxiliary spaces or in any other part of the ship where the auxiliaries under A division are located.

The refrigeration plant, similar in many respects to the home refrigerator, preserves the supply of fresh foods and provides ice for general shipboard use. The air compressors supply compressed air for pneumatic tools, for cleaning parts of machinery, for diesel engine air starting systems, and for various other purposes. The equipment assigned to the A division is located throughout the ship.

Repair Division

The R division is responsible for maintaining the watertight integrity of the ship. The R division consists of the hull maintenance shops. If you are assigned to this division you will work in one of these shops.

All damage control and firefighting equipment aboard ship is maintained by the R division. Much of the training of personnel in damage control is carried on by R division personnel.

ELECTRICAL OFFICER

The electrical officer is responsible, under the engineer officer, for the operation, maintenance, and repair of the electrical machinery and systems throughout the ship. The maintenance of the ship's power and lighting systems is the primary concern of the electrical officer. Repair shops are provided on larger ships for extensive repairs to electrical equipment. The IC system, under the electrical officer, is a part of the E division.

The E division has charge of generators, gyrocompasses, intercommunications, and other electrical equipment. The generators in the enginerooms provide electricity for power and light. The steam turbines which drive the generators are operated by the M division. On electric-driven ships, the E division also operates the main generators and main electric motors which turn the shaft. If assigned to this division, you might work in the main motor rooms, the enginerooms, the electric repair shop, or in the IC rooms.

NBC DEFENSE OFFICER

Since nuclear, biological, and chemical (NBC) defense procedures are classified and subject to frequent modification, it is best to refer to current OpNav Instructions for a detailed description of the NBC defense officer's duties. In general, the NBC defense officer (collateral duty of the damage control assistant) is responsible for the training of shipboard personnel in defense against NBC attack. He is also responsible for the procurement, distribution, maintenance of NBC defense

equipment. In addition, he must ensure decontamination of personnel, equipment, and the ship; and the management and transportation of NBC casualties with the advice and assistance of the medical officer.

FIRE MARSHAL

The fire marshal, under the engineer officer and the damage control assistant, is responsible for the maintenance and readiness of the ship's firefighting equipment. He is also responsible for the prevention and elimination of fire hazards in the ship.

GAS-FREE ENGINEER

The duties and responsibilities of the gas-free engineer are given in chapter 9920 of *NavShips Technical Manual*. Briefly, the gas-free engineer tests and analyzes the air in compartments or voids that have been closed and are being opened for inspection, to determine whether such spaces are safe for personnel to enter without danger of poisoning or suffocating. He also determines whether it is safe to perform "hot work" (welding or cutting) within, on the exterior boundaries, or in the way of such spaces without danger of fire or explosion. (The person designated as the gas-free engineer must have the qualifications set forth by NavSeaSysCom.

DIVISION OFFICERS

In addition to the duties as set forth in *U.S. Navy Regulations*, the Ship's Organization and Regulations Manual generally prescribes that a division officer shall:

1. Direct the operation of his division through leading petty officers, as prescribed in the division organization.

2. Assign personnel to watches and duties within the division (develop rotation programs for battle stations, watches, and general duties to ensure the training and proficiency of assigned personnel).

3. Ensure that division personnel receive indoctrination, and military and professional training.

4. Prepare enlisted performance evaluation sheets for personnel of his division.

5. Maintain a division notebook containing personnel data cards, training data, a space and equipment responsibility log, the watch and battle stations to be manned, and such other data as may be useful for the orientation of an officer relieving him, and for ready reference.

6. Be responsible for all forms, reports, and correspondence originated or maintained by his division.

7. Establish and maintain a division organization manual and other directives which may be necessary for the administration of his division.

8. Ensure that prescribed security measures are strictly observed by personnel of his division.

9. Make recommendations for personnel transfers and changes in the division allowance to his department head.

10. Forward requests for leave, liberty, and special privileges, and make recommendations for their disposition.

11. Conduct periodic inspections and exercises, and musters to evaluate the performance and discipline of his division and to initiate disciplinary action, when he deems it necessary, in accordance with the Uniform Code of Military Justice and other regulatory directives.

TECHNICAL ASSISTANTS

The duties of technical assistants (LDO, Warrant Officer, E-8, and E-9 personnel) vary with the different specialities. In general, a technical assistant's duties and responsibilities apply to the operation, maintenance, and repair of machinery, equipment, and systems under the cognizance of the division to which the technical assistant is assigned.

ENLISTED PERSONNEL

In addition to the general ratings for enlisted personnel of the engineering department, there are specific billets or assignments which require

special mention. Three of these billets are the oil and water king, the movie operator, and the boat engineer.

Oil and Water King

On a large ship, the billet for oil and water king is usually divided into two billets—one for the fuel oil details, and the other for potable (fresh) water and feed water.

The oil and water king is a Boiler Technician on steam-driven ships and is generally an Engineman on diesel-driven ships. His responsibilities are as follows:

1. Supervising the operation of all valves of the fuel oil system, the transfer and booster pumps, fuel oil manifolds, fuel oil heating coils as necessary, and the fresh water system as prescribed by the casualty control bills for those systems.

2. Properly maintaining fuel oil service tanks, and shifting suction among service tanks.

3. Maintaining the distribution of fuel oil and water so that the ship will remain on an even keel and with proper trim.

4. Preparing fuel and water reports.

5. Testing and recording the alkalinity, chloride content, hardness, and other properties of feed and boiler water, and making required tests of fuel oil. Detailed information concerning such tests can be obtained from *NavShips Technical Manual*, chapter 9550 for oil tests and chapter 9560 for water tests.

6. Refer to *Basic Military Requirements*, NAVEDTRA 10054-D, for information on safety precautions to be observed when handling fuel oil.

Movie Operator

Movie operators are generally graduates of a sound motion picture school or duly qualified by competent authority. Provision is generally made to have a sufficient number of operators to accommodate the ship's needs.

Boat Engineer

Firemen, Enginemen, or Machinist's Mates from the A division are detailed as boat engineers. Boat engineers operate, clean, and inspect the parts of the boats assigned to them. Boat engine repairs are undertaken by Enginemen assigned to that duty.

ENGINEERING DEPARTMENT RATINGS

After serving as a Fireman for the required length of time, you may strike for a third class petty officer's rating. But first, you must make an important decision. You may choose any of 10 different ratings. The decision you make will determine largely the kind of work you will be doing throughout the balance of your Navy career.

In general, the engineering department ratings require an aptitude for things mechanical, a degree of proficiency in mathematics and physics, and some experience in repair work. A knowledge of mechanical drawing is also desirable. Rate Training Manuals and Nonresident Career Courses covering many aspects of basic engineering are available. Self-reliance, ingenuity, and resourcefulness are particularly important to any man striking for an engineering rating.

Schools for engineering ratings are available to those who can qualify. The various types of schools are covered in *Basic Military Requirements*, NAVEDTRA 10054-D. A list of all schools and their requirements is given in the *Catalog of Navy Training Courses* (CANTRAC), NAVEDTRA 10500.

The titles and job descriptions of the various engineering department ratings are given in the sections which follow.

MACHINIST'S MATE (MM)

Machinist's Mates operate and maintain the propulsion turbines, reduction gears, condensers, air ejectors, and such miscellaneous auxiliary equipment in the engineering spaces as pumps, air compressors, generators, evaporators, valves, oil purifiers, oil and water heaters, governors, and propeller shafts. Figure 2-2 shows a

Figure 2-2.—Machinist's Mate recording evaporator readings. 139.1

Machinist's Mate recording readings from an evaporator.

ENGINEMAN (EN)

Enginemen operate and maintain power plants used to operate shipboard auxiliaries and to propel boats and ships. In addition to working with internal combustion engines (diesel and gasoline), Enginemen must know how to operate, maintain, and repair many kinds of shipboard auxiliary equipment. Such equipment includes refrigeration and air conditioning systems, pumps, air compressors, and various kinds of hydraulic equipment. Figure 2-3 shows an Engineman standing watch on a diesel engine.

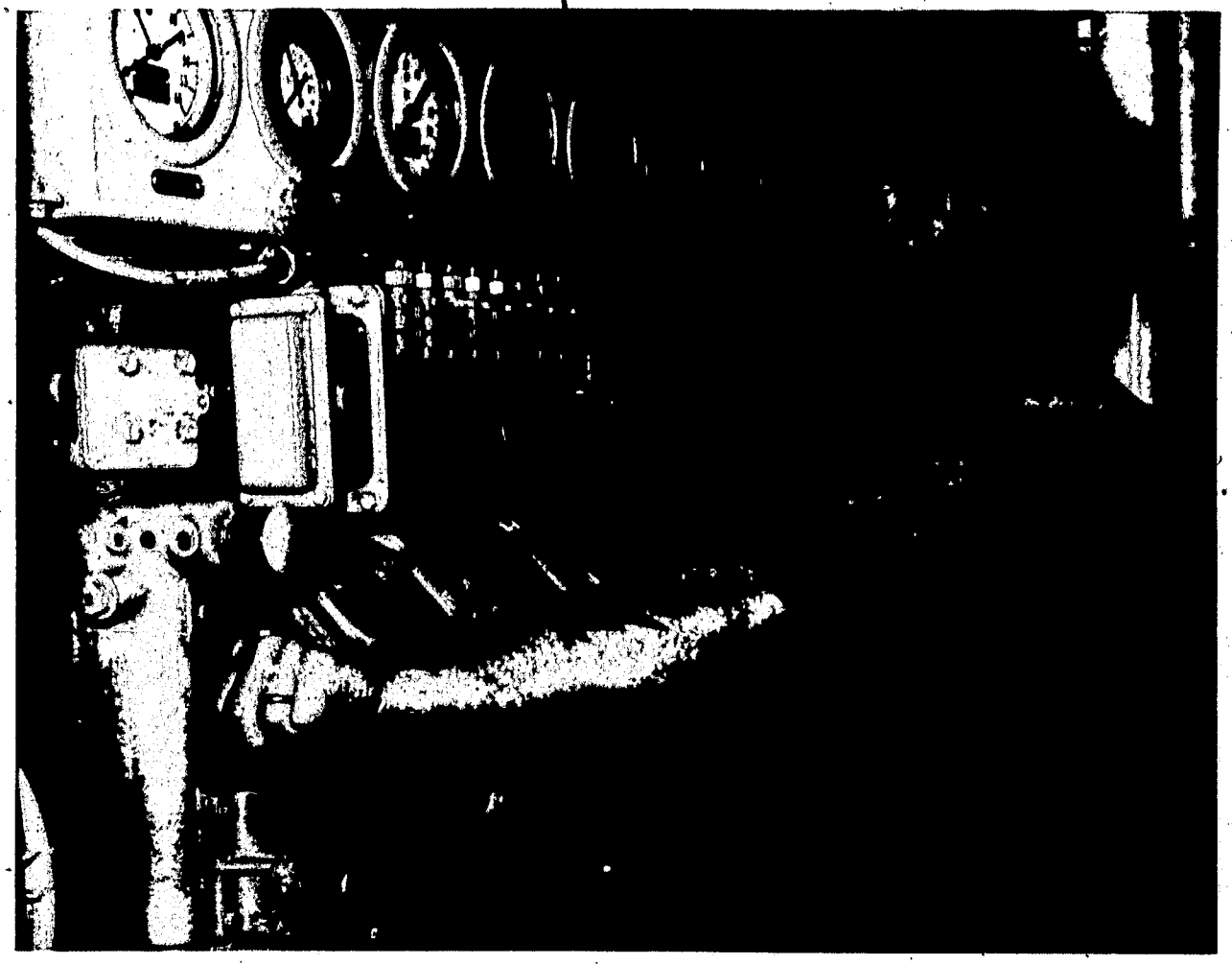

Figure 2-3.—Engineman standing watch on a diesel engine. 139.2

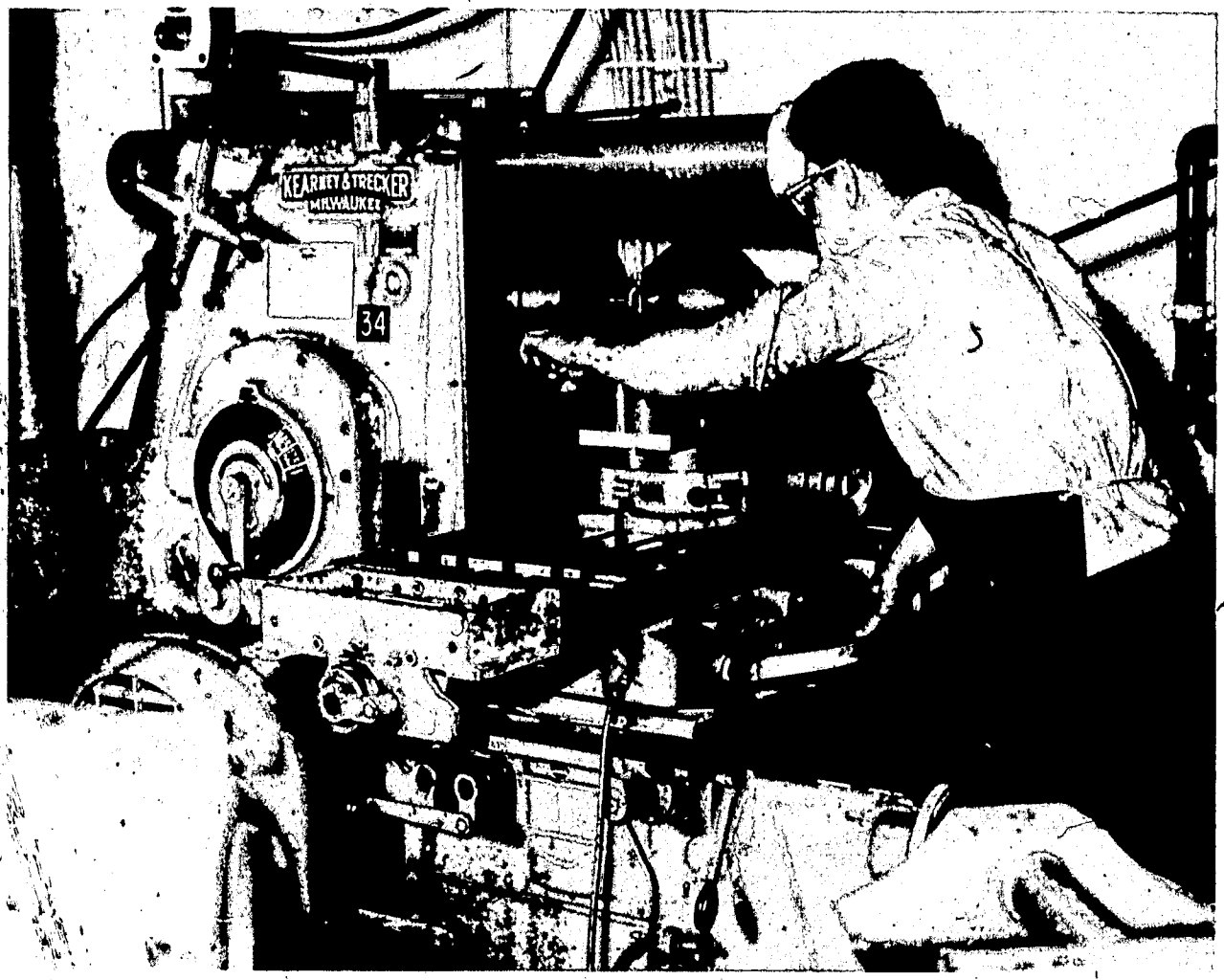

139.3

Figure 2-4.—Machinery Repairman operating a milling machine.

MACHINERY REPAIRMAN (MR)

Machinery Repairmen make all types of machine shop repairs on shipboard machinery. This work requires the skillful use of lathes, milling machines, boring mills, grinders, power hacksaws, drill presses, and other machine tools, as well as all handtools and measuring instruments usually found in a machine shop. The job of restoring machinery to good working order, ranging as it does from the fabrication of a simple pin or link to the complete rebuilding of an intricate gear system, requires skill of the highest order. Often, in the absence of dimensional drawings or other design information, a Machinery Repairman must depend upon his ingenuity and know-how to successfully machine a repair part. Figure 2-4 shows a Machinery Repairman operating a milling machine.

BOILER TECHNICIAN (BT)

The Boiler Technicians operate all types of marine boilers and fireroom machinery (pumps and forced draft blowers). They transfer, test,

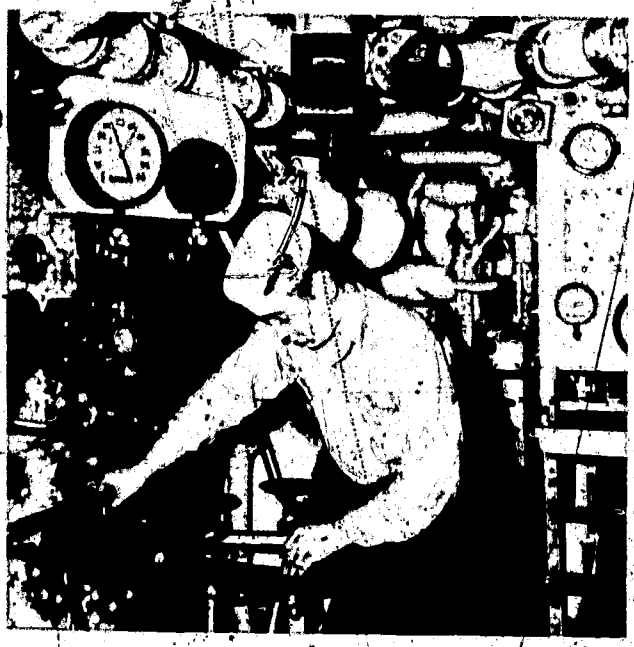

139.4

Figure 2-5.—A Boiler Technician removing an atomizer from a burner.

and take soundings of fuel and feed water tanks. They also maintain and repair boilers, pumps, and associated machinery. Figure 2-5 shows a Boiler Technician removing an atomizer from a burner.

BOILERMAKER (BR)

Boilermakers test, maintain, and repair marine boilers, heat exchangers, and associated equipment; inspect boilers and effect corrective measures; perform electric arc and oxyacetylene welding in boiler repairs; and maintain records and reports.

ELECTRICIAN'S MATE (EM)

Electrician's Mates stand watch on generators, motors, switchboards, and control equipment; operate searchlights and other electrical equipment; maintain and repair power and lighting circuits, electrical fixtures, motors, generators, distribution switchboards, and other electrical equipment; test for grounds or other casualties; and repair and rebuild electrical equipment in an electrical shop. Figure 2-6

139.5

Figure 2-6.—An Electrician's Mate taking readings on main switchboard.

139.6

Figure 2-7.—Hull Maintenance Technician preparing to weld.

103.70

Figure 2-8.—Hull Maintenance Technician removing damaged planks.

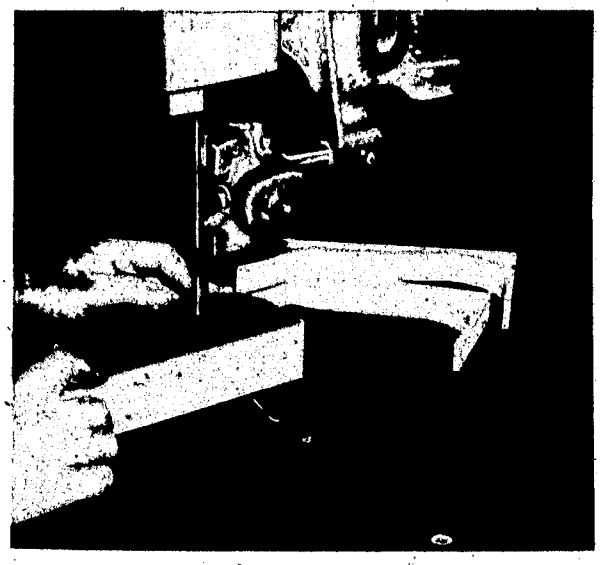

29.137D

Figure 2-9.—A Patternmaker sawing a pattern.

68.124

Figure 2-10.—A Molder finishing a core.

shows an Electrician's Mate taking readings at the main switchboard.

INTERIOR COMMUNICATIONS ELECTRICIAN (IC)

IC Electricians maintain and repair interior communications (IC) systems, gyrocompass systems, amplified voice systems, and alarm and warning systems, and related equipment; and stand IC and gyrocompass watches. (An IC Electrician may be responsible for maintaining motion picture equipment aboard ship.)

HULL MAINTENANCE TECHNICIAN (HT)

On 27 February 1970 the Secretary of the Navy approved the establishment of the Hull Maintenance Technician (HT) general rating and the attendant disestablishment of the Shipfitters general rating (and included service ratings) and the Damage Controlman general rating.

Hull Maintenance Technicians (HT) plan, supervise, and perform tasks necessary for fabrication, installation and repair of all types of structures shipboard and shore-based plumbing and piping systems, qualify in the techniques, skills and use of damage control and firefighting equipment, carpentry, nuclear, biological and chemical (NBC) defense; perform tasks in the field of shipboard damage control NBC defense and firefighting; organize, supervise and train personnel in maintenance repair, NBC defense and damage control duties. Figure 2-7 shows an HT preparing to weld two pieces of angle iron together.

Hull Maintenance Technicians are responsible for maintaining and preparing damage control equipment and for preserving watertight integrity, by such means as adjusting dogs and renewing gaskets on watertight doors, hatches, scuttles, etc. Figure 2-8 shows two Hull Maintenance Technicians removing damaged planks.

PATTERNMAKER (PM)

Patternmakers make wooden, plaster, and metal patterns, and other equipment used by Molders in a Navy foundry. They mount patterns on match plates and on follow boards for production molding. Patternmakers make master patterns; make full scale layouts of wooden patterns, core boxes, and templates; and index and store patterns. Figure 2-9 illustrates a Patternmaker sawing a pattern.

MOLDER (ML)

Molders operate foundries aboard ship and at shore stations; make molds and cores, rig flasks, prepare heats, and pour castings of ferrous, nonferrous, and alloy metals; shake out and clean castings; and pour bearings. Figure 2-10 illustrates a Molder finishing a core.

OTHER RATINGS

In addition to the Group VII Engineering and Hull Ratings, you will be required to know some of the other ratings in the Navy. Figure 2-11 gives you a chart of the Navy Ratings.

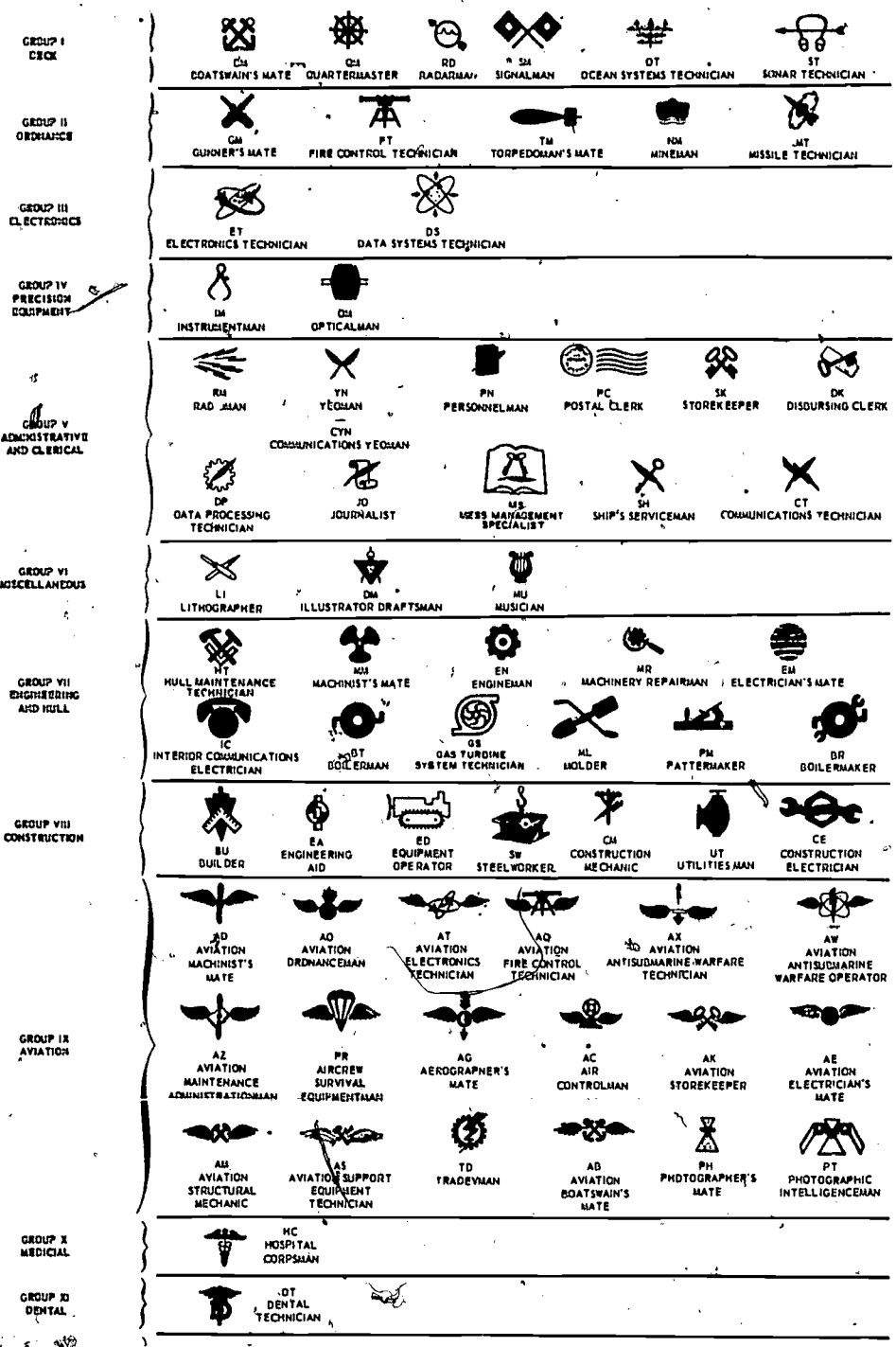

22

3.10

Figure 2-11.—Specialty marks for enlisted ratings.

CHAPTER 3

ENGINEERING FUNDAMENTALS

This chapter is designed to acquaint you with various laws and phenomena of nature. Included is information pertaining to matter and energy, force and motion, heat and temperature, pressure, combustion, the laws of perfect gases, and some fundamental information about metals. The information provided here is general in nature; but it has been included to give you a better understanding of how or why engineering machinery operates or produces work. As you study this chapter, remember that anything that occupies space and has weight is called MATTER.

PHYSICS

The forces of physics and the laws of nature are at work in every single piece of machinery or equipment aboard ship. It is by these forces and laws that the machinery and equipment produce work.

MASS, WEIGHT, AND INERTIA

The physical principles of mass and inertia are involved in the design and operation of the heavy flywheels and bull gears that are at work in the ship's engineering plant. The great mass of the wheel tends to keep it rotating once it has been set in motion. The high inertia of the wheel keeps it from responding to small fluctuations in speed and thus helps to keep the engine running smoothly.

The mass and the weight of an object are not the same. The mass of an object is the quantity of matter which the object contains. The weight of the object is equal to the gravitational force with which the object is attracted to the earth. Inertia is that physical property which causes objects that are at rest to remain at rest, unless they are acted upon by some external force; and which causes objects moving at a constant velocity to continue moving at this constant velocity, and in the same direction, until acted upon by some external force.

FORCE

Force is what makes an object start to move, or speed up, or slow down; or keep moving against resistance. This force may be either a push or a pull. You exert a force when you push against a truck, whether you move the truck, or only try to move it. You also exert a force when you pull on a heavy piano, whether you move the piano, or only try to move it. Forces produce or prevent motion, or have a tendency to do so.

A tendency to prevent motion is the frictional resistance offered by an object. This frictional resistance is called frictional force. While it can never cause an object to move, it can check or stop motion. Frictional force wastes power, creates heat, and causes wear. Although frictional force cannot be entirely eliminated, it can be reduced with lubricants.

SPEED, VELOCITY, AND ACCELERATION

Speed is defined as the distance covered per unit of time. Velocity is speed in a certain direction. Acceleration is the rate at which velocity changes. If, for example, the propeller shaft rate of rotation increases from stop to 100

revolutions per minute (rpm) in 20 minutes, the acceleration is 5 rpm. In other words, the velocity has increased 5 revolutions per minute, during each minute, for a total period of 20 minutes. A body with uniform motion has no acceleration. When the velocity of an object changes by the same amount each second or minute, you have uniform acceleration. Uniform deceleration is obtained when the decrease in velocity is the same each second or minute.

ENERGY

Energy may be described as the ability to do work. In the physical sense, work is done when a force acts on matter and moves it. We use heat energy to turn a steam turbine and electric energy to drive motors. The mechanical energy of the pistons in an automobile engine is transmitted to the wheels by the crankshaft, transmission, drive shaft, differential gears and rear axles. Nuclear energy is used to generate electric power and to drive naval ships.

Perhaps the most common definition of energy is "the capacity for doing work." However, this is not quite a complete statement because energy can produce other effects which could not be considered as work. For example, heat can flow from one object to another without doing any work; yet heat is a form of energy and the process of heat transfer produces an effect. Therefore, a better definition of energy is "the capacity for producing an effect."

Energy is normally classified according to the size and nature of the objects or particles with which it is associated. So we say that mechanical energy is the energy associated with large objects—usually things that are big enough to see—such as pumps and turbines. Thermal energy is energy associated with molecules. Chemical energy is energy that arises from the forces which bind the atoms together in a molecule. Chemical energy is released whenever combustion or any other chemical reaction takes place. Electrical energy, light waves, and radio waves are examples of energy that are associated with particles smaller than atoms. Nuclear energy is obtained by splitting the atoms. Each of these types of energy (mechanical, thermal, etc.) must also be classified as either (1) stored energy, or (2) energy in transition.

Stored energy is energy that is actually contained within or stored within an object. There are two kinds of stored energy: potential energy and kinetic energy. Potential energy is energy within an object waiting to be released; while kinetic energy is energy that has been released. For example, potential energy exists within a rock resting on the edge of a cliff, water behind a dam, or steam behind a turbine throttle valve.

Kinetic energy exists because of the relative velocities of two or more objects. If you push the rock, open the gate of the dam, or open the turbine throttle valve, something will move. The rock will fall, the water will flow, and the steam will jet through the turbine nozzle valves. Thus the potential energy is converted to kinetic energy.

Energy in transistion exists when the rock hits the ground, the water hits the bottom of the dam of the paddles of a water wheel, or when the steam hits the blades of the turbine rotor.

In the examples just discussed, an external souce of energy was used to get things started. External energy was used to push the rock, to open the gate of the dam, or to open the throttle valve. Thus, you see that one energy system affects another energy system. There is a tremendous amount of chemical energy stored in fuel oil; but it will not raise the steam in the boiler until some external energy has been expended to start the oil burning.

Energy can be measured. The most common measurement of expended energy is in work units of foot-pounds. When an object has been moved through a resisting force, work has been done.

WORK

The turbines and other power equipment used aboard ship are important because they do work. Work is defined as the result of force moving through distance. The unit of measure for work is the FOOT-POUND (ft-lb). The two parts of this unit are the POUND OF FORCE and the FOOT OF DISTANCE.

Force is measured in pounds. The gravitational pull on an object weighing 1 pound

is a force of 1 pound. If you lift a 1-pound weight from ground level to a height of 1 foot, you exert a force of 1 pound through a distance of 1 foot, and you have done 1 foot-pound of work in the process. A force of 100 pounds is required to raise a 100-pound anvil; if you lift it to the top of a 30-inch bench, the work you have done is 2 1/2 ft x 100 lb = 250 ft-lb. Work (in foot-pounds), therefore, equals the force (in pounds) times the distance (in feet).

Now, suppose you want to move a 60-pound anvil across the deck without lifting it. It will take a considerable force to slide the anvil. If you slide it 10 feet, you do 600 foot-pounds of work. Here the force of 60 pounds is required to overcome the resisting force of friction between the anvil and the deck. A great deal of the work done by any machine is the overcoming of many frictional forces which resist the motion of the parts.

POWER

The ship's main engines, boilers, main reduction gear, main shaft, and propellers are frequently called the POWER PLANT; and they are commonly rated according to how much power they can develop. For example, it might take one man 10 hours to load 20,000 pounds of ammunition on a truck, whereas a crane could do the same job in 5 minutes. The amount of work done is the same, but the crane is much more powerful than the man. It can do the work faster. Power, then relates to work and time; it is the time rate of doing work. If we assume that the ammunition is raised an average height of 6 feet, the work done is equal to 6 ft x 20,000 lb or 120,000 ft-lb. Considering the man also as a machine, the power of each of the two machines if found by dividing this amount of work by the time required in each case. Expressing 10 hours in minutes, the man would work at the rate of 120,000 ft-lb ÷ 600 min. = 200 ft-lb per min. The computed power of the crane would be 120,000 ft-lb ÷ 5 min = 24,000 ft-lb per min or 400 ft-lb per sec.

The most common unit of power is known as the HORSEPOWER. One horsepower is equivalent to 550 ft-lb per second, or 33,000 ft-lb per minute. Thus, if a lifting machine raises a weight of 100 pounds at the rate of 250 ft-lb per second, the machine is exerting only 0.454 horsepower (250 ft-lb ÷ 550 ft-lb = 0.454 hp).

If crane hoists 2,000 pounds of cargo to a height of 30 feet in 5 seconds, how much horsepower is developed? Here is how to get the answer:

$$\text{Power} = \frac{\text{work}}{\text{time}} = \frac{2{,}000 \text{ lb} \times 30 \text{ ft}}{5 \text{ sec}}$$

$$= 12{,}000 \text{ ft-lb per sec}$$

$$\text{Horsepower} = \frac{12{,}000 \text{ ft-lb per sec}}{550 \text{ ft-lb per sec}} = 21.8$$

Or suppose a turbine has a known horsepower of 37,500 at rated capacity, and you want to know how much work it does. You find out by multiplying the developed horsepower by the hours in operation. This gives HORSEPOWER-HOURS, which is a measure of work for main propulsion machinery.

LAWS OF GASES

The energy transformation of major interest in the shipboard engineering plant is the transformation from heat to work. To see how this transformation occurs, we need to consider the pressure, temperature, and volume relationships which hold ture for gases. In the middle of the 17th century, Robert Boyle, an English scientist, made some interesting discoveries concerning the relationship between the pressure, the temperature, and the volume of gases. In 1787, Jacques Charles, a Frenchman, proved that all gases expand the same amount when heated one degree if the pressure is kept constant. The relationships that these two men discovered are summarized as follows:

1. When the temperature is held constant, an increase in the pressure on a gas causes a proportional decrease in volume. A decrease in the pressure causes a proportional increase in volume.

2. When the pressure is held constant, an increase in the temperature of a gas causes a

proportional increase in volume. A decrease in the temperature causes a proportional decrease in volume.

3. When the volume is held constant, an increase in the temperature of a gas causes a proportional increase in pressure. A decrease in the temperature causes a proportional decrease in pressure.

Suppose we have a boiler in which steam has just begun to form. With the steam stop valves still closed, the volume of the steam remains constant while the pressure and the temperature are both increasing. When operating pressure is reached and the steam stop valves are opened, the high pressure of the steam causes the steam to flow to the turbines. The pressure of the steam thus provides the potential for doing work; the actual conversion of heat to work is done in the turbines.

PRESSURE AND VACUUM

Because pressure is very important to the engineering plant, it is necessary that you understand the relationships between gage pressure, atmospheric pressure, vacuum, and absolute pressure. These relationships are indicated in figure 3-1.

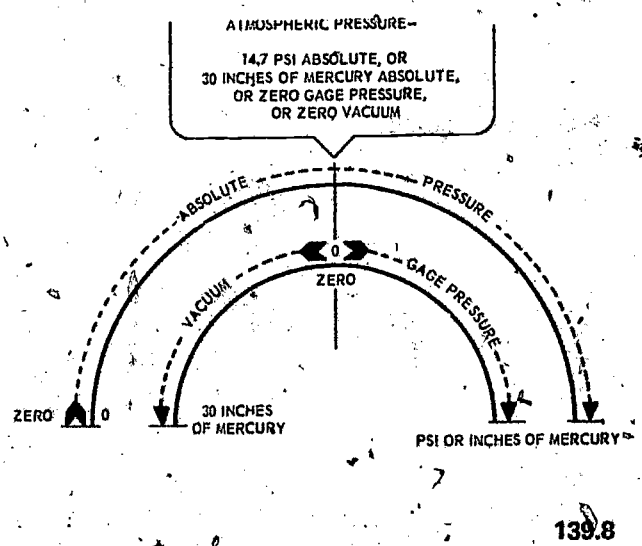

Figure 3-1. Relationships between vacuum, gage pressure, absolute pressure, and atmospheric pressure.

Gage Pressure

Gage pressure is the pressure actually shown on the dial of a gage which registers pressures at or above atmospheric pressure. Gage pressure is actually shown in pounds per square inch (psi); but it may be shown in inches of water, mercury, or other liquid. A reading of 1 inch of water means that the exerted pressure is able to support a column of water 1 inch high, or that a column of water in a U-tube will be displaced 1 inch by the pressure being measured. Similarly, a gage pressure reading of 12 inches of mercury means that the measured pressure is able to support a column of mercury 12 inches high. Gages are calibrated in inches of water when they are to be used for measuring very low pressures. Inches of mercury may be used when the range of pressures to be measured is somewhat higher, since mercury is approximately 14 times heavier than water.

Note that a gage pressure reading of zero means that the pressure being measured is exactly the same as the existing atmospheric pressure. A gage reading of 50 psi means that the pressure being measured is 50 psi IN EXCESS OF the existing atmospheric pressure.

Atmospheric Pressure

Atmospheric pressure, or the pressure exerted by the weight of the air in the atmosphere, is measured with a BAROMETER (fig. 3-2). A barometer is similar to a manometer (see chapter 9), except that the indicating tube is sealed at the top. A barometer may be made by filling a tube with mercury and then inverting it so that the open end rests in a container of mercury which is open to the atmosphere. The absence of pressure at the closed end of the tube permits atmospheric pressure, acting upon the surface of the mercury in the open container, to hold the mercury in the tube at a height which corresponds to the pressure being exerted.

Normally, at sea level atmospheric pressure will hold the column of mercury at a height of approximately 30 inches. Since a column of mercury 1 inch high exerts a pressure of 0.49 pounds per square inch, a 30-inch column of

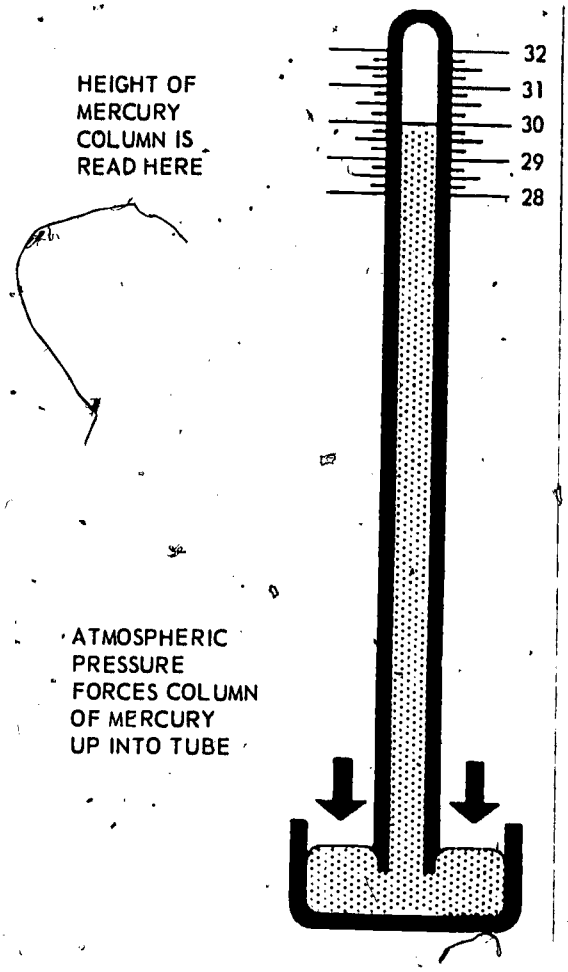

69.86

Figure 3-2.—Operating principle of mercurial barometer.

mercury exerts a pressure which is equal to (30. x 0.49) 14.7 pounds per square inch. Thus, we can say that atmospheric pressure (zero gage pressure) at sea level is 14.7 psi, or 14.7 pounds per square inch absolute (psia). Notice, however, that 14.7 psi is the STANDARD for atmospheric pressure. Since fluctuations from this standard are shown on the barometer, the term BAROMETRIC PRESSURE is used to describe the atmoshperic pressure which exists at any given moment. As a rule, you can use the term ATMOSPHERIC PRESSURE and the value 14.7 psi in place of the actual barometric pressure; but there may be times when it will be important to know the actual (barometric) pressure, in order to make precise measurements of gage pressure or vacuum.

Vacuum

A space in which the pressure is less than atmospheric pressure is said to be under vacuum. The amount of vacuum is expressed in terms of the difference between the pressure in the space and the existing atmospheric pressure. Vacuum is measured in inches of mercury—that is, the number of inches a column of mercury in a U-tube will be displaced by a pressure equal to the difference between the pressure in the vacuum space and the existing atmospheric pressure.

Vacuum gage scales are marked from 0 to 30. When a vacuum gage reads zero, the pressure in the space is the same as the existing atmospheric pressure—or, in other words, there is no vacuum. A vacuum gage reading of 30 inches of mercury indicates a nearly perfect vacuum. In actual practice, it is impossible to obtain a perfect vacuum; and the highest vacuum gage readings are seldom over 29 inches of mercury.

Absolute Pressure

Absolute pressure is atmospheric pressure plus gage pressure, or atmospheric pressure minus vacuum. For example, if gage pressure is 300 psi, absolute pressure is 314.7 psi; or if the measured vacuum is 10 inches of mercury, absolute pressure is approximately 20 inches of mercury. It is important to note that the amount of pressure in a space under vacuum can be expressed only in terms of absolute pressure.

Sometimes it is necessary to convert a reading from inches of mercury to pounds per square inch. Figure 3-1 gives you all the information you need to make this conversion. Since atmospheric pressure is equal to 14.7 psi or to 30 inches of mercury, it is easy to see that 1 inch of mercury is equal to (14.7 psi ÷ 30) 0.49. Now convert your gage reading to absolute pressure (in inches of mercury) and then multiply this figure by 0.49 psi. For example to

convert a vacuum gage reading of 14 inches of mercury to psi, you would proceed as follows:

1. Convert 14 inches of mercury vacuum to absolute pressure. Absolute pressure is atmospheric pressure minus vacuum (30 inches - 14 inches = 16 inches).

2. Multiply the absolute pressure in inches of mercury by 0.49. Since 1 inch of mercury is equal to 0.49 psi, 16 inches of mercury is equal to (16 x 0.49 psi) 7.8 psi (approximately 8 psi). Remember that this answer is in terms of absolute pressure.

As you can see, it is also easy to convert psi to inches of mercury. Since atmospheric pressure is equal to 14.7 psi or to 30 inches of mercury, 1 psi is equal to (30 inches of mercury ÷ 14.7) 2.04 inches of mercury. For example, 10 psi absolute is equal to (10 x 2.04 inches of mercury) 20.4 inches of mercury absolute.

In order to interpret the reading on a pressure gage, you must know the location of the gage in relation to the line in which the pressure is being measured. As a general rule, pressure gage connections are led from the top of the pressure line. Occasionally, however, it is necessary to locate a pressure gage at some distance below the pipe; then the reading on the gage will indicate the pressure being measured plus the pressure exerted by the weight of the column of liquid above the gage. The required correction should be made in calibration of the gage. If the correction has not been made in calibration, it must be made in the interpretation of the gage reading.

Correction for a head of liquid should be made as follows:

1. Measure the vertical distance from the center of the gage to the line in which the pressure is being measured.

2. For each foot of the distance measured, subtract from the gage reading the weight of a column of liquid 1 foot high and 1 inch square in cross section. If you are measuring pressure on a steam or water line, you must correct for a pressure head of water. Since a column of water 1 foot high and 1 inch square in cross section weighs 0.433 pounds, you subtract 0.433 psi from the gage reading for each foot of drop. (CAUTION: The weight of each liquid is different, and must be determined before you can make this correction.)

For example, to correct a pressure gage reading for a pressure head of water, assume that a steam pressure gage is connected 10 feet below the steam line. The steam cools and condenses in the gage connection line, filling the connection line with water. The uncorrected gage reading is 250 psi. Multiply 0.433 psi by 10, and then subtract the resulting figure from 250 psi:

(1) 0.433 psi x 10 = 4.33 psi.
(2) 250 psi - 4.33 psi = 245.67 psi.

Thus the true pressure in the steam line is 245.67, or approximately 246 psi.

It is sometimes necessary to connect a water pressure gage at some distance above the point at which the pressure is being measured; then the reading on the gage will show the pressure being measured minus the pressure required to support the column of water up to the gage. To correct the reading you must add the weight of the column of water—that is, you must add 0.433 psi to the gage reading for each foot of rise.

For example, assume that a water pressure gage is connected 5 feet above the point at which the pressure is being measured. The gage reading is 30 psi. To obtain the actual pressure at the point of measurement, you must add (5 x 0.433 psi) 2.17 psi to the gage reading. Thus the actual pressure is 32.17 psi.

PRINCIPLES OF HYDRAULICS

The word hydraulics is derived from the Greek word for water (hydōr) plus the Greek word for a reed instrument like an oboe (aulos). The term "hydraulics" originally covered the study of the physical behavior of water at rest and in motion. However, the meaning of hydraulics has been broadened to cover the physical behavior of all liquids, including the oils that are used in present day hydraulic systems.

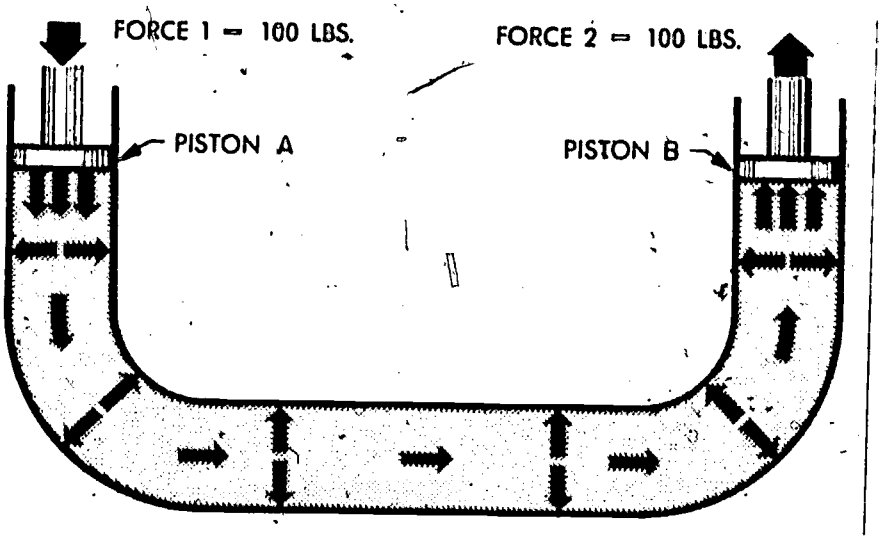

5.181

Figure 3-3.—Principle of mechanical hydraulics.

During the period before World War I, the Navy began to apply hydraulics extensively to naval mechanisms. Since that time, naval applications have increased to the extent that many ingenious hydraulic devices are used in the solution of problems of gunnery, navigation, and aeronautics. Aboard ship today the applications of hydraulics include anchor windlasses, power cranes, steering gear, remote controls, power drives for the elevation of guns and training of mounts and turrets, powder and projectile hoists, recoil systems, gun rammers, and airplane catapults.

The foundation for modern hydraulics began in 1653 when Pascal discovered that "pressure set up in a liquid acts equally in all directions." This pressure acts at right angles to the containing surfaces.

When we apply a force to the end of a column of confined liquid, the force is transmitted not only straight through to the other end, but also equally in every direction throughout the column—forward, backward, and sideways—so that the containing vessel is literally filled with pressure. This is the reason that a flat firehose takes on a circular cross section when it is filled with water under pressure. The outward push of the water is equal in every direction. Water will leave the hose at the same velocity, through leaks, regardless of where the leaks are in the hose.

Let us now consider the effect of Pascal's law in the system shown in figure 3-3. If the force at piston A is 100 pounds and the area of the piston is 10 square inches, then the pressure in the liquid must be 10 pounds per square inch (psi). This pressure is transmitted to piston B—so that for every square inch of its area, piston B will be pushed upward with a force of 10 pounds. In this example we are merely considering a liquid column of equal cross section so that the areas of the pistons are equal. All we have done is to carry a 100-pound force around a bend; however, the principle illustrated is the basis for practically all mechanical hydraulics.

The same principle may be applied where the input piston is much smaller than the output piston or vice versa. Assume that the area of the input piston is 2 square inches and the area of the output piston is 20 square inches. If you apply a pressure of 20 pounds to the smaller piston, the pressure created in the liquid will again be 10 pounds per square inch because the force is concentrated on a smaller area. The upward force on the larger piston will be 200

pounds–10 pounds for each of its 20 square inches. Thus you can see that if two pistons are used in a hydraulic system, the force acting on each piston will be directly proportional to its area, and the magnitude of each force will be the product of the pressure and the area of the piston.

PRINCIPLES OF PNEUMATICS

Pneumatics is that branch of mechanics that deals with the mechanical properties of gases. Perhaps the most common application of these properties, used in the Navy today, is the use of compressed air. Compressed air is used to transmit pressure, according to Pascal's principle, in a variety of applications. For example, in tires and air-cushioned springs, compressed air acts as a cushion to absorb shock. Air brakes on locomotives and large trucks contribute greatly to the safety of railroad and truck transportation. In the Navy, compressed air is used in numerous ways. For example, tools such as riveting hammers and pneumatic drills are air operated. Automatic combustion control systems utilize compressed air for the operation of the instruments. Compressed air is also used in diving bells and diving suits. Perhaps a brief discussion on the use of compressed air as an aid in the control of submarines will best explain the theory of pneumatics.

Submarines are designed with a number of tanks that may be used for the control of the ship. These tanks are flooded with water to submerge; or they are filled with compressed air to surface.

The compressed air for the pneumatic system is maintained in storage tanks (called banks) at a pressure of 4,500 psi. During surfacing the pneumatic system delivers compressed air to the desired control tanks. Since the pressure of the air is greater than the pressure of the water, the water is forced out of the tank. As a result, the weight of the ship decreases; it becomes more buoyant, and thus tends to rise to the surface.

HEAT

You undoubtedly know from experience that heat and temperature are related; however, they are not the same. Water from a water main feels cool until it has been over a fire a few minutes. It evidently must have received something from the fire. If you place two pennies together, one of which was heated by being held in the flame of a match, in a short time the two pennies will be equally warm. Again, something passed into the cooler object and made it hot. That something is called heat.

Many forms of mechanical action also produce considerable quantities of heat. For example, you rub your hands together to warm them when they are cold. Matches are ignited by rubbing them on a rough surface. A Hull Maintenance Technician can notice heat in a piece of metal after hammering it; and the head of a nail is heated when the nail is driven into wood.

The molecules in the nail (as in all matter) are in continual motion. The blow on the nail increases the molecular motion. The molecules in the top layer receive the impulse from the hammer and vibrate with greater violence. The increased vibration and energy of motion is passed on to layer after layer of molecules. Thus, the effect produced by the blow is a general increase in the motion of the molecules. This energy of molecular motion is called heat.

Because molecules are constantly in motion, they exert a pressure on the walls of the pipe, boiler, cylinder, or other object in which they are contained. Also, the temperature of any substance arises from and is directly proportional to the activity of the molecules. Therefore, every time you read thermometers and pressure gages you are finding out something about the amount of internal energy contained in the substance. High pressures and temperatures indicate that the molecules are moving rapidly and that the substance therefore has a lot of internal energy.

Heat is a more familiar term that internal energy, yet one that may actually be more difficult to define correctly. The important thing to remember is that HEAT IS THERMAL ENERGY IN TRANSITION–that is, it is thermal energy that is moving from one substance or system to another.

An example will help to illustrate the difference between heat and internal energy. Suppose there are two equal lengths of pipe, made of identical materials and containing steam at the same pressure and temperature. One pipe is well insulated, the other is not insulated at all. From everyday experience you know that more heat will flow from the uninsulated pipe than from the insulated pipe. When the two pipes are first filled with steam, the steam in one pipe contains exactly as much internal energy as the steam in the other pipe. We know this is true because the two pipes contain equal volumes of steam at the same pressure and at the same temperature. After a few minutes, the steam in the uninsulated pipe will contain much less internal energy than the steam in the insulated pipe, as we can tell by measuring the pressure and the temperature of the steam in each pipe. What has happened? Stored thermal energy—internal energy—has moved from one place to another, first from the steam to the pipe, then from the uninsulated pipe to the air. The MOVEMENT or FLOW of thermal energy is what should be called heat.

Units of Measurement

Both internal energy and heat are usually measured using the unit called the BRITISH THERMAL UNIT (Btu). For most practical engineering purposes, 1 Btu is defined as the amount of thermal energy required to raise the temperature of 1 pound of water 1°F.

When large amounts of thermal energy are involved, it is usually more convenient to use multiples of the Btu. For example, 1 kBtu is equal to 1,000 Btu, and 1 mBtu is equal to 1,000,000 Btu.

Another unit in which thermal energy may be measured is the CALORIE, the amount of heat required to raise the temperature of 1 gram of water 1° C. One Btu equals 252 calories.

Sensible Heat and Latent Heat

Sensible heat and latent heat are terms often used to indicate the effect that the flow of heat has on a substance. The flow of heat from one substance to another is normally reflected in a temperature change in each substance—the hotter substance becomes cooler, the cooler substance becomes hotter. However, the flow of heat is not reflected in a temperature change in a substance which is in the process of changing from one physical state (solid, liquid, or gas) to another. When the flow of heat is reflected in a temperature change, we say that SENSIBLE HEAT has been added to or removed from the substance. When the flow of heat is not reflected in a temperature change but is reflected in the changing physical state of a substance, we say that LATENT HEAT has been added or removed.

Does anything bother you in this last paragraph? It should. Here we are talking about sensible heat and latent heat as though we had two different kinds of heat to consider. As noted before, this is common (if inaccurate) engineering language. So keep the following points clearly in mind: (1) heat is the flow of thermal energy; (2) when we talk about adding and removing heat, we mean that we are providing temperature differentials so that thermal energy can flow from one substance to another; and (3) when we talk about sensible heat and latent heat, we are talking about two different kinds of EFFECTS that can be produced by heat, but not about two different kinds of heat.

The three basic physical states of all matter are SOLID, LIQUID, and GAS (or vapor). The physical state of a substance is closely related to the distance between molecules. As a general rule, the molecules are closest together in solids, farther apart in liquids, and farthest apart in gases. When the flow of heat to a substance is not reflected in a temperature change, we know that the energy is being used to increase the distance between the molecules of the substance and thus to change it from a solid to a liquid or from liquid to a gas. You might say that latent heat is the energy price that must be paid for a change of state from solid to liquid or from liquid to gas. The energy is not lost; rather, it is stored in the substance as internal energy. The energy price is repaid, so to speak, when the substance changes back from gas to liquid or from liquid to solid, since heat flows from the substance during these changes of state.

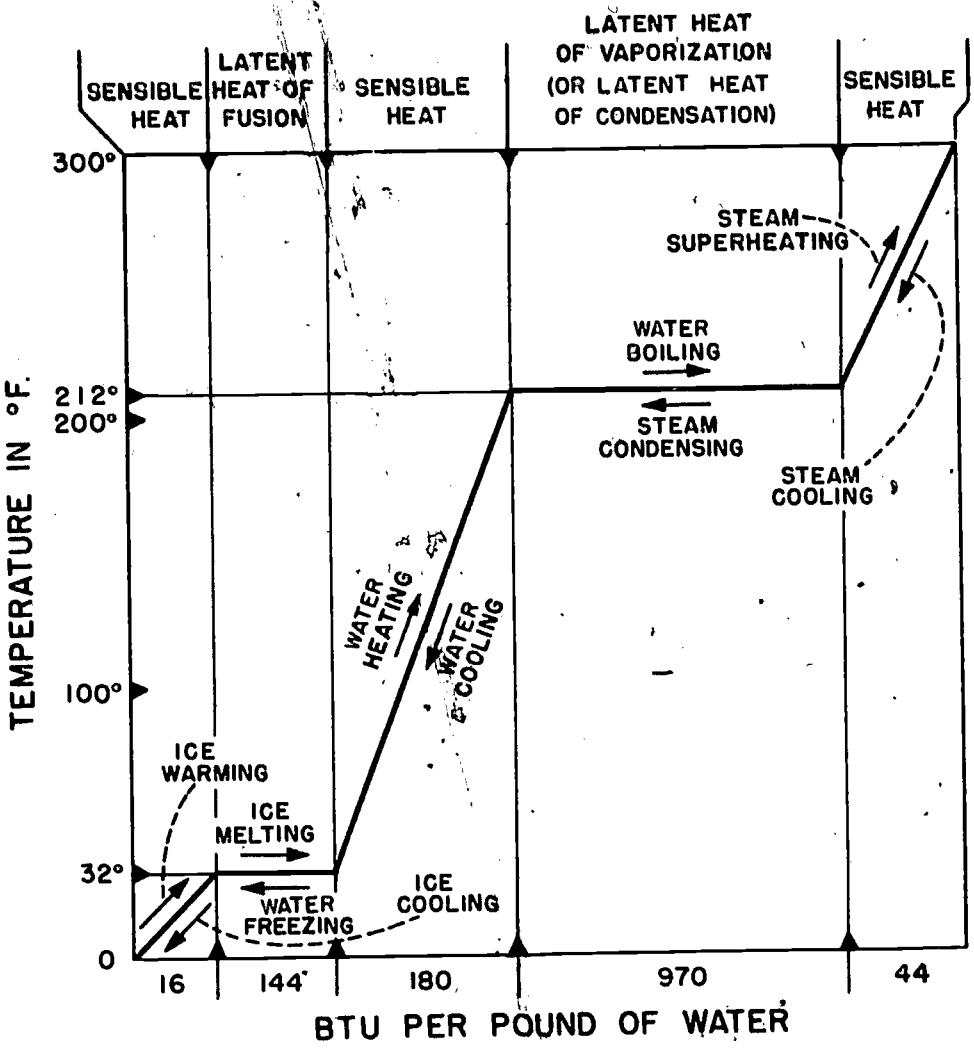

38.1

Figure 3-4.—Relationship between sensible heat and latent heat for water at atmoshperic pressure.

Figure 3-4 shows the relationship between sensible heat and latent heat for one substance, water, at atmospheric pressure. (The same kind of chart could be drawn for other substances; however, different amounts of thermal energy would be involved in the changes of state.)

If we start with 1 pound of ice at 0° F, we must add 16 Btu to rasie the temperature of the ice to 32° F. We call this adding sensible heat. To change the pound of ice at 32° F to a pound of water at 32° F, we must add 144 Btu (the LATENT HEAT OF FUSION). There will be no change in temperature while the ice is melting. After all the ice has melted, however, the temperature of the water will be raised as additional heat is supplied. If we add 180 Btu—that is, 1 Btu for each degree of temperature between 32° F and 212° F—the temperature of the water will be raised to the boiling point. To change the pound of water at 212° F to a pound of steam at 212° F, we must add 970 Btu (the LATENT HEAT OF VAPORIZATION). After all the water has been converted to steam the addition of more heat

will cause an increase in the temperature of the steam. If we add about 44 Btu to the pound of steam which is at 212° F, we can superheat it to 300° F.

The same relationships apply when heat is being removed: The removal of 44 Btu from the pound of steam which is at 300° F will cause the temperature to drop to 212° F. As the pound of steam at 212° F changes to a pound of water at 212° F, 970 Btu are given off. When a substance is changing from a gas or vapor to a liquid, we usually use the term LATENT HEAT OF CONDENSATION for the heat that is given off. Notice, however, that the latent heat of condensation is exactly the same as the latent heat of vaporization. The removal of another 180 Btu of sensible heat will lower the temperature of the pound of water from 212° F to 32° F. As the pound of water at 32° F changes to a pound of ice at 32° F, 144 Btu are given off without any accompanying change in temperature. Further removal of heat causes the temperature of the ice to decrease.

TEMPERATURE

The temperature of an object is a measure of how hot or cold the object is; it can be measured by thermometers and read on their temperature scales.

The temperature scales employed to measure temperature are the Fahrenheit scale and the Celsius (centigrade) scale. In engineering and for practically all purposes in the Navy, the Fahrenheit scale is used. It may, however, be necessary for you to convert Celsius readings to the Fahrenheit scale, so both scales are explained here.

The FAHRENHEIT SCALE has two main reference points—the boiling point of pure water at 212°, and the freezing point of pure water at 32°. The size of a degree of Fahrenheit is 1/180 of the total temperature change from 32° to 212°. And the scale can be extended in either direction—to higher temperatures without any limits, and to lower temperatures (by using MINUS degrees) down to the lowest temperature theoretically possible, the absolute zero. This temperature is -460°, or 492° below the freezing point of water.

In the CELSIUS SCALE, the freezing point of pure water is 0° and the boiling point of pure water is 100°. Therefore, 0° C and 100° C are equivalent to 32° F and 212° F, respectively. Each degree of Celsius is larger than a degree of Fahrenheit since there are only 100° Celsius between the freezing and boiling points of water, while this same temperature change requires 180° on the Fahrenheit scale. Therefore the degree of Celsius is $\frac{180}{100}$ or 1.8° Fahrenheit. In the Celsius scale absolute zero is -273°.

Figure 3-5 shows the two temperature scales in comparison and also introduces the simplest

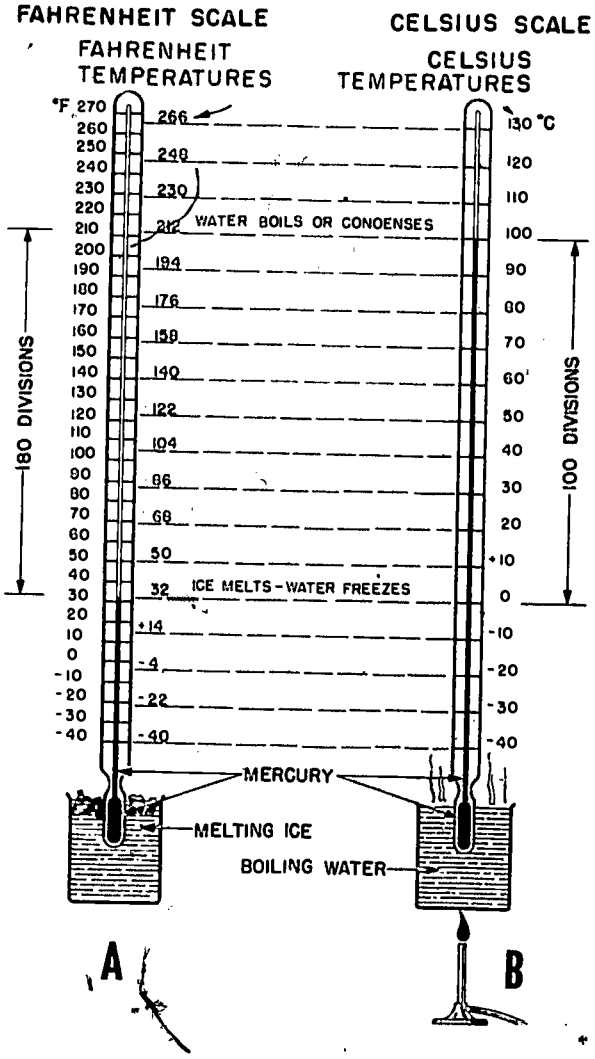

Figure 3-5.—Temperature scales.

of the temperature measuring instruments, the liquid-in-glass thermometer. The two thermometers shown are exactly alike in size and shape; the only difference is the outside markings or scales on them. Each thermometer is a hollow glass tube which has a mercury-filled bulb at the bottom, and which is sealed at the top. Mercury, like any liquid, expands when heated and will rise in the hollow tube. The illustration shows the Fahrenheit thermometer with its bulb standing in ice water (32° F), while the Celsius thermometer is in boiling water (100° C).

The essential point to remember is that the level of the mercury in a thermometer depends only on the temperature to which the bulb is exposed. If you were to exchange the thermometers, the mercury in the Celsius thermometer would drop to the level at which the mercury now stands in the Fahrenheit thermometer, while the mercury in the Fahrenheit thermometer would rise to the level at which the mercury now stands in the Celsius thermometer. The temperatures would be 0° C for the ice water and 212° F for the boiling water.

If you place both thermometers in water containing lumps of ice, the Fahrenheit thermometer will read 32° and the Celsius thermometer will read 0°. Heat the water slowly. The temperature will not change until the ice in the water has completely melted (a great deal of heat is required just to melt the ice), then both mercury columns will begin to rise. When the mercury level is at the +10° mark on the Celsius thermometer, it will be at the +50° mark on the Fahrenheit thermometer. The two columns will rise together at the same speed and, when the water finally boils, they will stand at 100° C and 212° F, respectively. The same temperature change—that is, the same amount of heat transferred to the water—has raised the temperature 100° Celsius and 180° Fahrenheit, but the actual change in heat energy is exactly the same.

COMBUSTION

The term "combustion" refers to the rapid chemical union of oxygen with a fuel. The perfect combustion of fuel should result in carbon dioxide, nitrogen, water vapor, and sulphur dioxide. The oxygen required to burn the fuel is obtained from the air. Air is a mechanical mixture containing by weight 21 percent oxygen, 78 percent nitrogen, and 1 percent other gases. Only oxygen is used in combustion of the fuel; nitrogen is an inert gas which has no chemical effect upon the combustion.

The chemical combination obtained during combustion results in the liberation of heat energy, a portion of which is used to propel the ship. Actually, what happens is a rearrangement of the atoms of the chemical elements into new combinations of molecules. In other words, as the temperature of the fuel oil in the presence of oxygen is increased to the ignition point, the various chemical elements in the fuel begin to separate from each other and to unite with certain amounts of oxygen to form entirely new substances, which give off heat energy in the process. A good fuel has a high speed of combustion, thus producing a large amount of heat in a short time.

PERFECT COMBUSTION is the objective. However, this cannot be achieved as yet in either a boiler or the cylinders of an internal-combustion engine. Theoretically, it is simple. It consists of bringing each particle of the fuel (heated to its ignition temperature) into contact with the correct amount of oxygen. The following factors are involved:

1. Sufficient air must be supplied.

2. The air and fuel particles must be thoroughly mixed.

3. Temperatures must be high enough to maintain combustion.

4. Enough time must be allowed to permit completion of the process.

However, COMPLETE COMBUSTION can be achieved. This is accomplished by supplying more oxygen to the process than would be required if perfect combustion were possible. The result is that some of the excess oxygen appears in the combustion gases.

STEAM

Steam is water to which enough heat has been added to convert it from the liquid to the gaseous state. When heat is added to water in an open container, steam forms, but it quickly mixes with air and cools back to water which is dispersed in the air, making the air more humid. If you add the heat to water in a closed container, the steam builds up pressure. If you add exactly enough heat to convert all the water to steam at the temperature of boiling water, you get saturated steam. SATURATED STEAM is steam saturated with all the heat it can hold at the boiling temperature of water.

The boiling temperature of water becomes higher as the pressure over the water becomes higher. Steam hotter than the boiling temperature of water is called SUPERHEATED STEAM. When steam has 250° F of superheat, the actual temperature is the boiling temperature plus 250° F. At 600 psi the boiling temperature of water is 489° F. So if steam at 600 psi has 250° F of superheat, its actual temperature is 739° F. WET STEAM is steam at the boiling temperature which still contains some water particles. DESUPERHEATED STEAM is steam which has been cooled by being passed through a pipe extending through the steam drum; in the process the steam loses all but approximately 20°F or 30°F of its superheat. The advantage of desuperheated steam is that it is certain to be dry, yet not so hot as to require special alloy steels for the construction of the piping that carries the desuperheated steam about the ship.

METALS

As you look around, you see that not only is your ship constructed of metal, but also that the boilers, piping system, machinery, and even your bunk and locker are constructed of some type of metal. No one type of metal can serve all the needs aboard ship. Many types of metals or metal alloys must be used. A strong metal must be used for some parts of a ship, while a lightweight metal is needed for other parts. Some areas require special metal that can be shaped or worked very easily.

The physical properties of some metals or metal alloys make them more suitable for one use than for another. Various terms are used in describing the physcial properties of metals. By studying the following explanations of these terms you should have a better understanding of why certain metals are used on one part of the ship's structure and not on another part.

STRENGTH refers to the ability of a metal to maintain heavy loads (or force) without breaking. Steel, for example, is strong, but lead is weak.

HARDNESS refers to the ability of a metal to resist penetration, wear, or cutting action.

MALLEABILITY is a property of a metal that allows it to be rolled, forged, hammered, or shaped, without cracking or breaking. Copper is a very malleable metal.

BRITTLENESS is a property of a metal that will allow it to shatter easily. Metals such as cast iron or cast aluminum, and some very hard steels are brittle.

DUCTILITY refers to the ability of a metal to stretch or bend without breaking. Soft iron, soft steel, and copper are ductile metals.

TOUGHNESS is the property of a metal that will not permit it to tear or shear (cut) easily and that allows it to stretch without breaking.

Metal preservation aboard ship is a continuous operation since the metals are constantly exposed to fumes, water, acids, and moist salt air; all of these will eventually cause corrosion. The corrosion of iron and steel is called rusting and results in the formation of iron oxide (iron and oxygen) on the surface of the metal. Iron oxide (or rust) can be identified easily by its reddish color. (A blackish hue occurs in the first stage of rusting but is seldom thought of as rust.) Corrosion can be reduced or prevented by using better grades of base metals, by adding special metals such as nickel and chromium, or by coating the surface with paint or other metal preservatives.

Metal and alloys are divided into two general classes: ferrous and nonferrous. Ferrous metals are those that are composed primarily of iron. Nonferrous metals are those that are composed

primarily of some element or elements other than iron. One way to tell a common ferrous metal from a nonferrous metal, is by using a magnet; most ferrous metal is magnetic and nonferrous metal is nonmagnetic.

Elements must be alloyed (or mixed) together to obtain the desired physical properties of a metal. For example, alloying (or mixing) chromium and nickel with iron produces a metal known as special treated steel. Special treated steel (STS) has great resistance to penetrating and shearing forces and is used for gun shields, turrets, protective decks, and other vital areas. A nonferrous alloy that has many uses aboard ship is copper-nickel, which is used extensively in salt water piping systems. Copper-nickel is produced by mixing copper and nickel together. There are many other different metals and alloys used aboard ship which will not be discussed here.

With all the different types of metals used aboard ship, some way must be used to identify these metals in the storeroom. At the present time, the Navy utilizes two systems of identifying metals: the continuous identification marking system and the color marking system. These systems have been so designed that even after a portion of the metal has been removed the identifying marks are still visible.

In the continuous identification marking system, the identifying information is actually painted on the metal with a heavy ink. This marking appears at specified intervals over the length of the metal. The marking contains the producer's trademark and the commercial designation of the metal. The marking also indicates the physical condition of the metal such as "cold drawn," "cold rolled," "seamless," and others.

In the color marking system, a series of color symbols with a related color code is used to identify metals. "Color symbol" refers to a color marking actually painted on the metal. The symbol is composed of one, two, or three colors and is painted on the metal in a conspicuous place. These color symbols correspond to the elements of which the metal is composed.

For further information on the metals used aboard ship, their properties and identification systems, refer to the Rate Training Manual, *Hull Maintenance Technician 3 & 2*, NAVEDTRA 10573.

CHAPTER 4

SHIP PROPULSION

The primary function of any marine engineering plant is to convert the chemical energy of a fuel into useful work and to utilize that work in the propulsion of the ship. A propulsion unit consists of the machinery and equipment, including their controls, which are mechanically, electrically, or hydraulically connected to a propulsion shaft.

This chapter contains information on the principles of ship propulsion and, in addition, acquaints you with some of the different types of ship propulsion units, which include the geared-turbine drive, the turboelectric drive, diesel electric drive and the straight diesel engine drive.

PRINCIPLES OF SHIP PROPULSION

A ship is propelled through the water by means of some device which imparts velocity to a column of water and moves it in the direction opposite the direction in which it is desired to move the ship. A reactive force (thrust) is thereby developed against the velocity-imparting device, and this thrust, when transmitted to the ship, causes the ship to move through the water. All propelling devices—oars, paddle wheels, and propellers—are designed to move a column of water in order to build up a reactive force sufficient to move the ship.

The screw-type propeller is the propulsion device used in practically all naval ships. The thrust developed on the propeller is transmitted to the ship's structure by the shaft through the thrust bearing. On most steam-driven ships, the mechanical energy required to turn the propeller is provided by the turbines. Reduction gears are used on practically all steam-driven ships to connect the turbine to the shaft in a manner that allows the turbines to operate at high rotational speeds while the propellers operate at lower rotational speeds, thus allowing most efficient operation of both turbines and propellers.

The general principle of ship propulsion is illustrated in figure 4-1.

TYPICAL PROPULSION UNITS

Propulsion units with various types and designs of prime movers are currently in use in naval ships. The prime movers of a propulsion unit may be either a geared turbine, a turbine and a generator, a diesel engine and a generator, or a straight diesel engine. These are the most common types of prime movers of propulsion units with which we are most concerned.

GEARED-TURBINE DRIVE

In the geared-turbine drive, the unit parts or sections that make up the individual propulsion units consist of the main turbines and the reduction gear.

Figure 4-2 shows the general arrangement of the turbines and gears in a geared-turbine propulsion unit. Not all geared-turbine plants have the cruising turbine which is included in the diagram. Ordinarily, cruising turbines will be found in only the older destroyers.

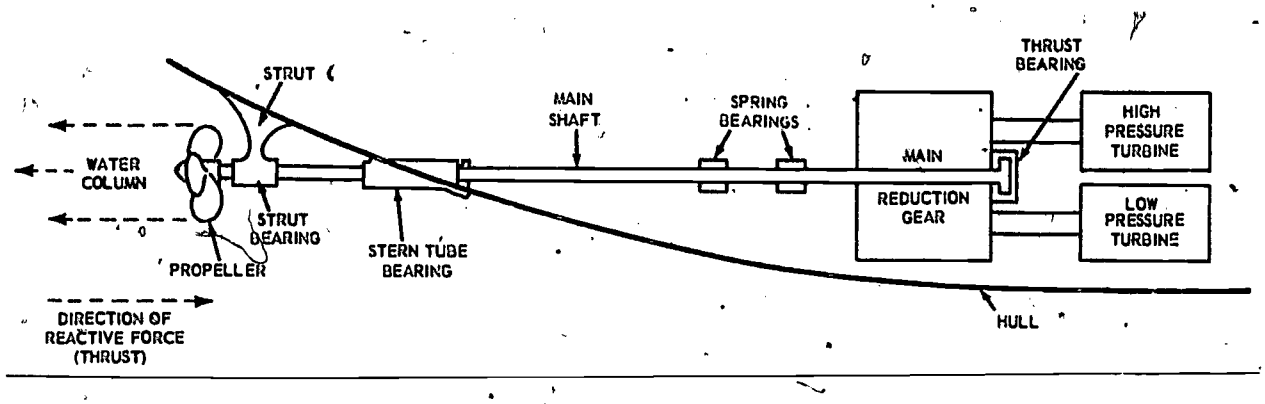

47.42

Figure 4-1.—General principle of ship propulsion.

In a typical destroyer propulsion plant, the speed reduction ratio between the cruising turbine shaft and high pressure turbine shaft is approximately 1.8 to 1. The speed ratio between the high pressure turbine shaft and propeller shaft is 16 to 1, and the ratio between the low pressure turbine and propeller shaft is 13 to 1. In other words, in operation, if the propeller shaft is revolving at 100 rpm, the cruising turbine will be revolving at 2,880 rpm (1.8 X 16 X 100), the high pressure turbine at 1,600 rpm (16 X 100), and the low pressure turbine at 1,300 rpm (13 X 100).

Figure 4-2 shows two astern elements, one at each end of the low pressure turbine. This arrangement is typical for combatant type ships; auxiliary type ships usually have one astern element instead of two, and that one invariably

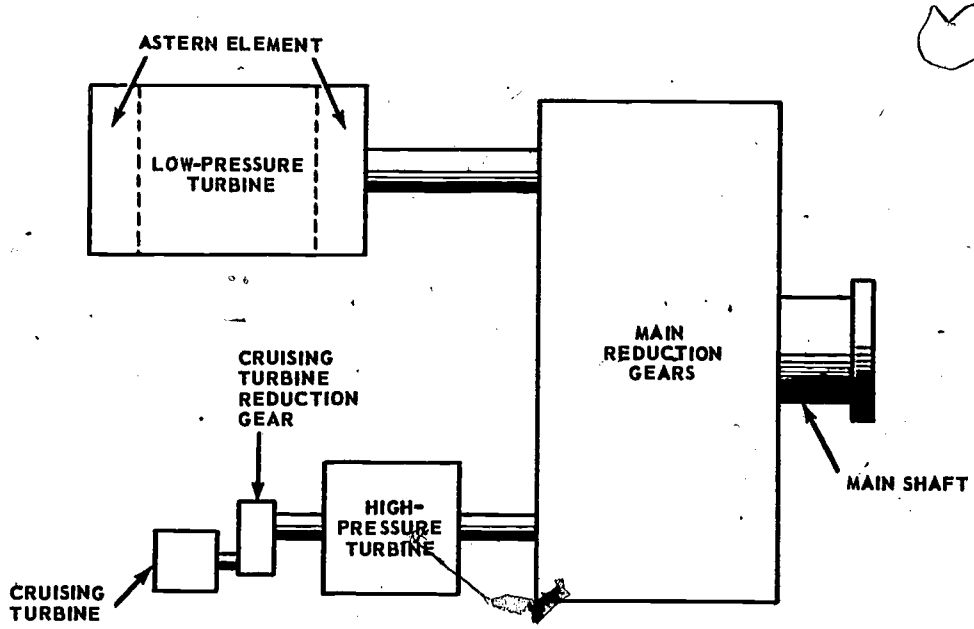

47.1

Figure 4-2.—Geared-turbine propulsion unit.

is located at the forward end of the low pressure turbine (the end farthest from the reduction gear).

The propulsion shaft, which extends from the main gear (low speed) shaft of the reduction gear to the propeller, is supported and held in alignment at the spring bearings, the stern tube bearings, and strut bearing. The axial thrust, acting on the propulsion shaft as a result of the pushing effect of the propeller, is absorbed in the main thrust bearing. In most ships, the main thrust bearing is located at the forward end of the main shaft, within the reduction gear casing. In some very large ships, however, the main shaft thrust bearing is located farther aft in a machinery space or a shaft alley.

TURBOELECTRIC DRIVE

Turboelectric drive installations have a single turbine unit for each installed shaft. Figure 4-3 shows the diagrammatic arrangement of a turboelectric propulsion unit. As you can see, the propulsion unit includes a turbine, main generator, propulsion motor, and a propulsion control board, a direct current generator for supplying rotor field current to the propulsion motor and excitation current to the generator. Figure 4-4 is an illustration of a typical control board.

The speed reduction ratio between turbine and propeller in the turboelectric drive is approximately the same as in the geared-turbine

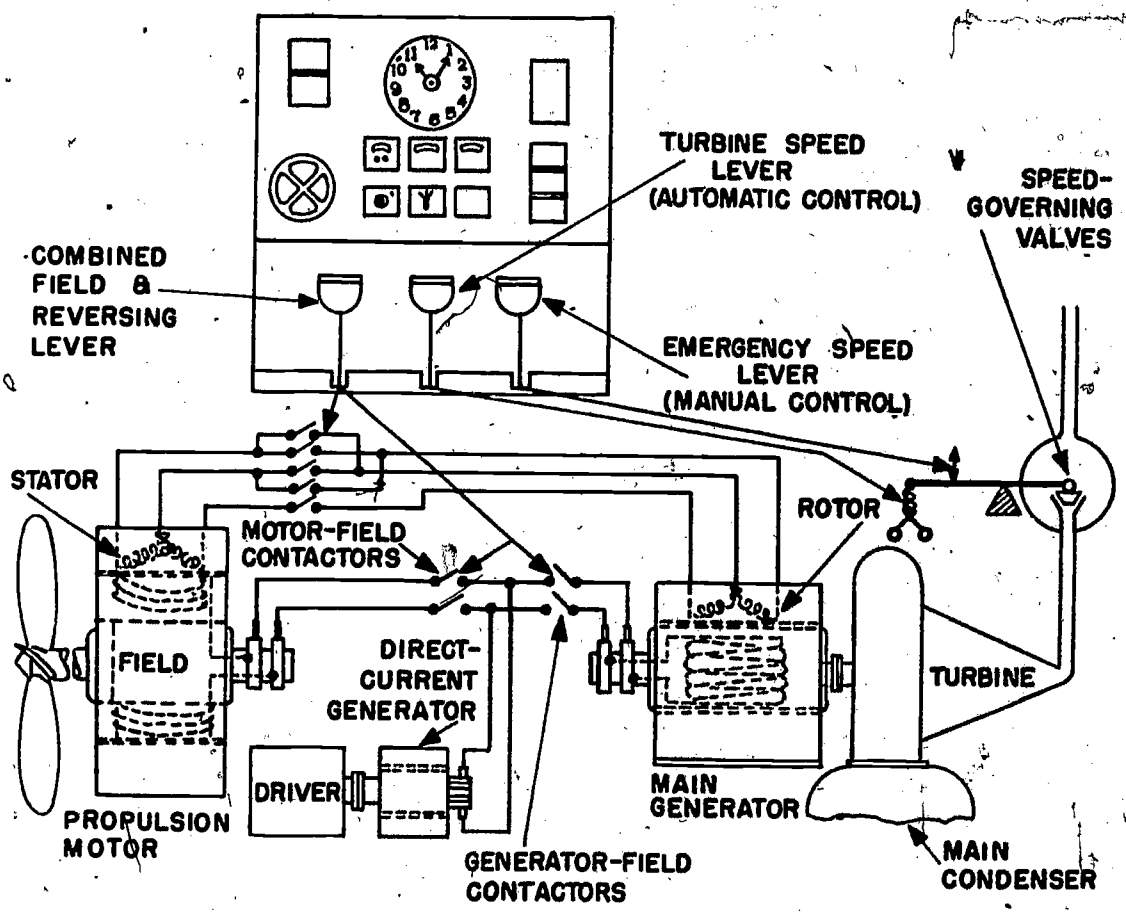

47.2

Figure 4-3.—Diagram of the turboelectric drive.

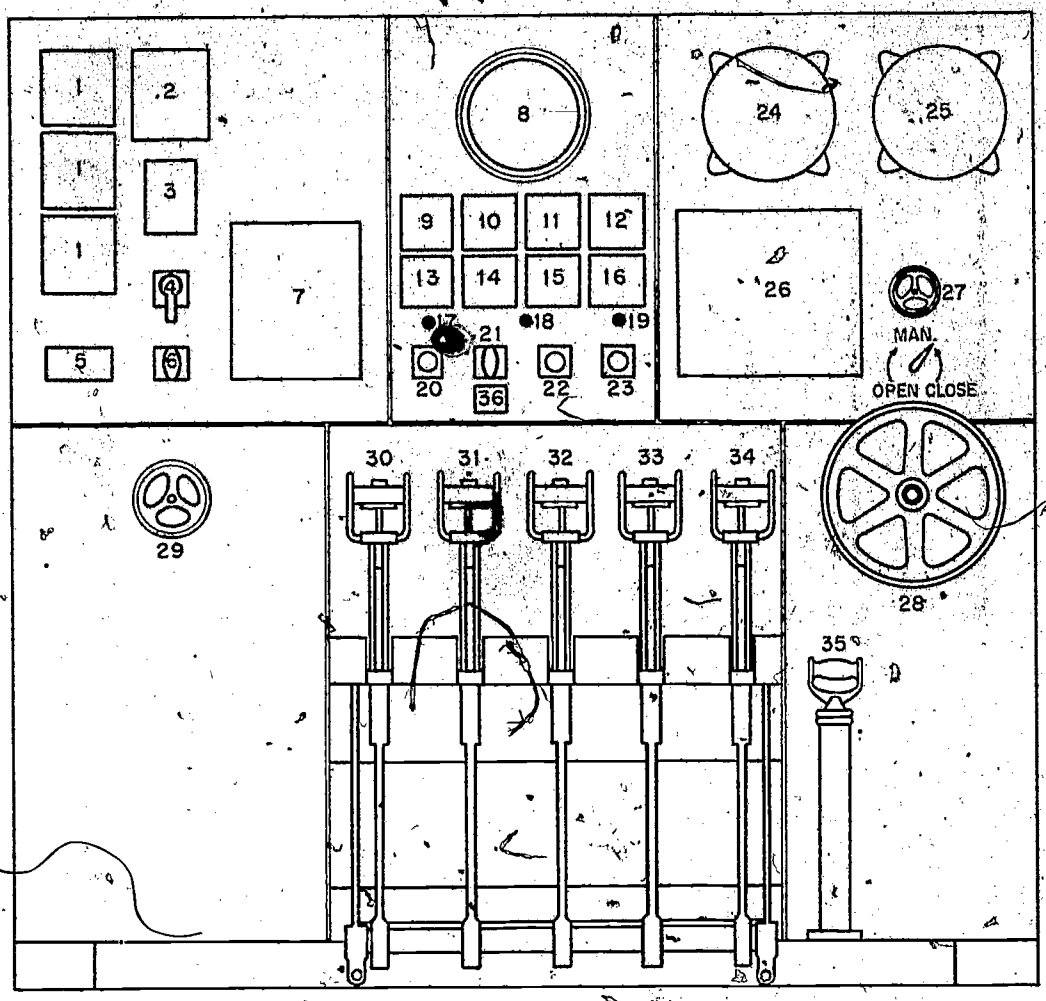

1. PHASE BALANCE RELAYS
2. GROUND PROTECTIVE RELAY
3. NAMEPLATE FOR GEN FIELD AMP
4. EXCITATION SET STARTING SWITCH
5. TEST BLOCK
6. STANDBY EXCITER CONTROL SWITCH
7. ENGINE ROOM TELEGRAPH
8. CLOCK
9. GENERATOR FIELD AMMETER
10. TURBINE SPEED INDICATOR
11. GENERATOR INDICATING WATTMETER
12. MOTOR FIELD AMMETER
13. EXCITER AND GROUND DETECTOR VOLTMETER
14. GENERATOR AMMETER
15. GENERATOR VOLTMETER
16. STATOR COIL TEMPERATURE INDICATOR
17. INDICATING LAMP CONTROL BUS
18. INDICATING LAMP WRONG DIRECTION INDICATOR
19. INDICATING LAMP HEATER
20. EXCITER VOLTMETER AND GROUND DETECTOR SWITCH
21. CONTROL SWITCH
22. MOTOR STATOR TEMPERATURE INDICATOR SWITCH
23. GENERATOR STATOR TEMPERATURE INDICATOR SWITCH
24. SHAFT RPM INDICATOR AND REVOLUTION COUNTER
25. SHAFT RPM INDICATOR AND REVOLUTION INDICATOR
26. RPM TELEGRAPH
27. LOAD LIMIT CONTROL RELEASE
28. LOAD LIMIT CONTROL HANDWHEEL
29. EXCITER FIELD RHEOSTAT
30. MOTOR SET UP LEVER
31. FIELD LEVER
32. REVERSER LEVER
33. GOVERNOR CONTROL LEVER
34. EMERGENCY LEVER
35. TURBINE TRIP HANDLE
36. NAMEPLATE FOR EMERGENCY OPERATION

27.95

Figure 4-4.—Propulsion control equipment—DE-51 class.

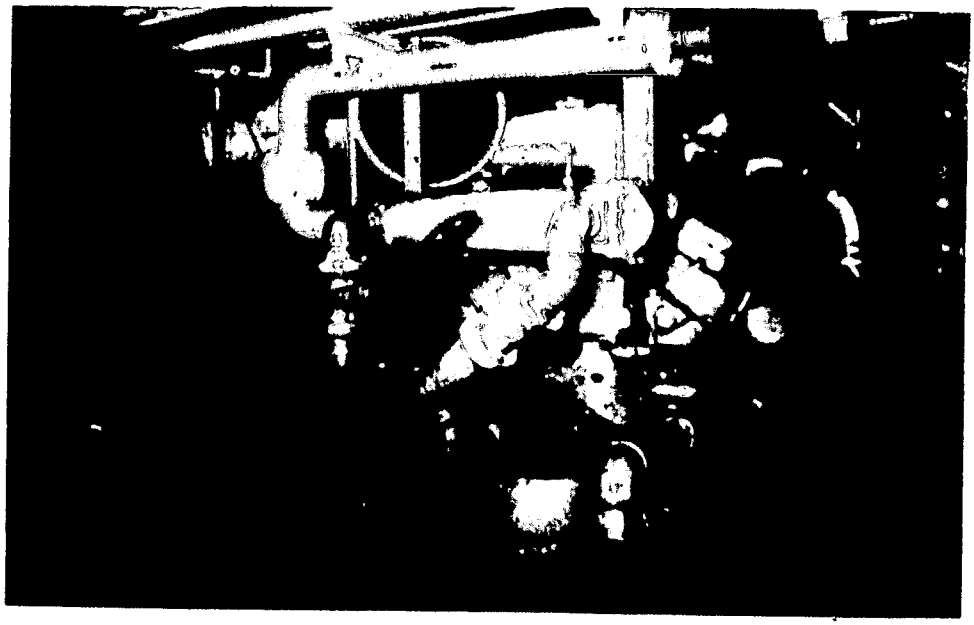

139.10

Figure 4-5.—Main propulsion diesel engine.

drive and is brought about electrically. For example, in one class of turboelectric drive type destroyer escort, the normal operating range fixed speed ratio between the turbine-generator set and the propulsion motor is 14 to 1.

One of the outstanding differences between geared drive and electric drive is that the latter does not have an astern turbine element. In the electric drive the direction of rotation of the propulsion motor, and consequently the propeller, is controlled by the electrical switch setup. Therefore, there is no need to reverse turbine rotation for astern operation.

DIESEL ELECTRIC DRIVE

Diesel electric drive is best suited to ships in the low or medium horsepower range up to about 6,000 shaft horsepower. It has been installed in approximately 175 escort ships and 500 surface ships and craft of other types, including minesweepers, submarine tenders, older submarines, fleet and harbor tugs, fuel oil tankers and barges, rescue and salvage craft and miscellaneous unclassified craft.

Figure 4-5 shows one of the main propulsion diesel engines aboard an oceanographic research ship. Figure 4-6 shows the main propulsion switchboard operating station aboard the same ship.

The propulsion equipment for a fleet tug that utilizes diesel electric drive consists of four diesel-engine driven generators furnishing power to one propulsion motor rated at 3,000 horsepower which in turn drives the propeller. The four generating units are normally located amid-ships—two on the port side and two on the starboard side.

The control of direction (forward or reverse) and the speed of propeller rotation is accomplished at the control board. A typical control board installation aboard a fleet tug is shown in figure 4-7.

In the propulsion plants of some diesel-driven ships, there is no mechanical connection between the engine(s) and the propeller(s). In such plants, the diesel engines are connected directly to generators. The electricity produced by such an engine-driven

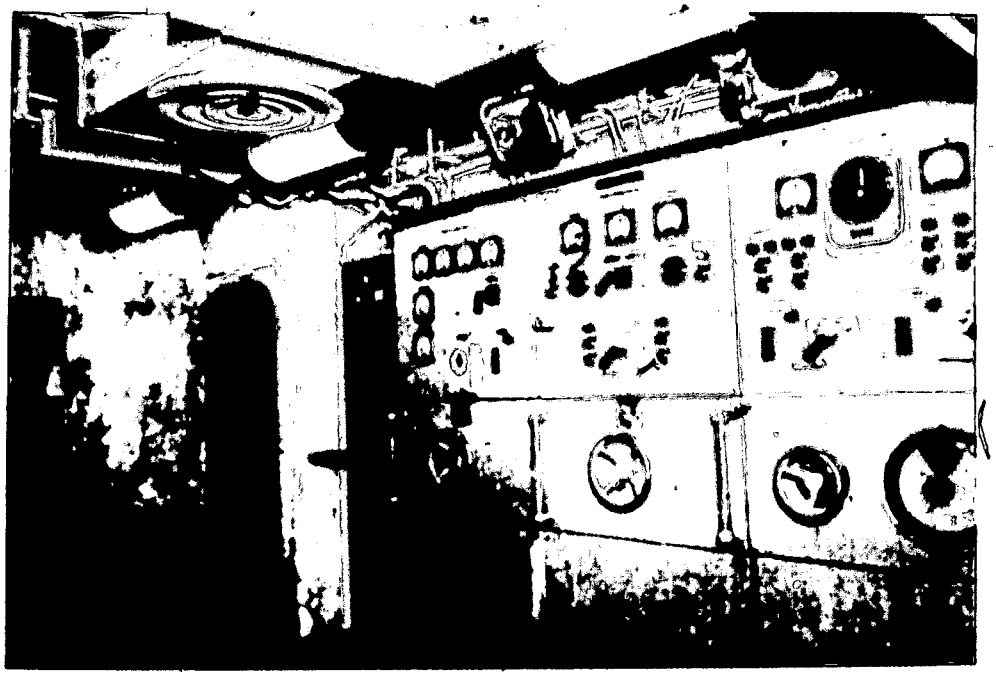

139.11

Figure 4-6.—Main propulsion switchboard, enclosed operating station.

generator is transmitted through cables to a motor. The motor is connected to the propeller shaft directly, or indirectly, through a reduction gear. When a reduction gear is included in a diesel electric drive, the gear is located between the motor and the propeller.

The generator and the motor of a diesel electric drive may be of the alternating current (a-c) type or of the direct current (d-c) type. Almost all diesel electric drives in the Navy, however, are of the direct current type. Since the speed of a d-c motor varies directly with the voltage furnished by the generator, the control system of an electric drive is so arranged that the generator voltage can be changed at any time. An increase or decrease in generator voltage is used as a means to control the speed of the propeller. Changes in generator voltage may be brought about by electrical means, by changes in engine speed, or by a combination of these methods. The controls of an electric drive may be in a location remote from the engine, such as the pilot house.

In a d-c electric drive, a reverse gear cannot be used to reverse the direction of rotation of the propeller. The electric system is arranged so that the flow of current through the motor can be reversed. This reversal in the flow of current causes the motor to revolve in the opposite direction. Thus, the direction of rotation of the motor and of the propeller can be controlled by manipulating the electrical controls.

DIESEL ENGINE DRIVE

Diesel engine drive is used on various types of auxiliary ships and craft such as minesweepers, subchasers, ammunition ships, patrol craft, landing ships (LST), and numerous other yard craft and small boats. You may also find diesel drive on a few of the older destroyer escorts.

The Navy uses the diesel engines except where special conditions favor the gasoline engine. Standardization of fuels, cheaper fuel, and reduction in fire hazards have been the chief factors in favor of the diesel engine.

The diesel engine used in some of the older destroyer escorts developed approximately 6,000 hp. The diesel engines of minesweepers

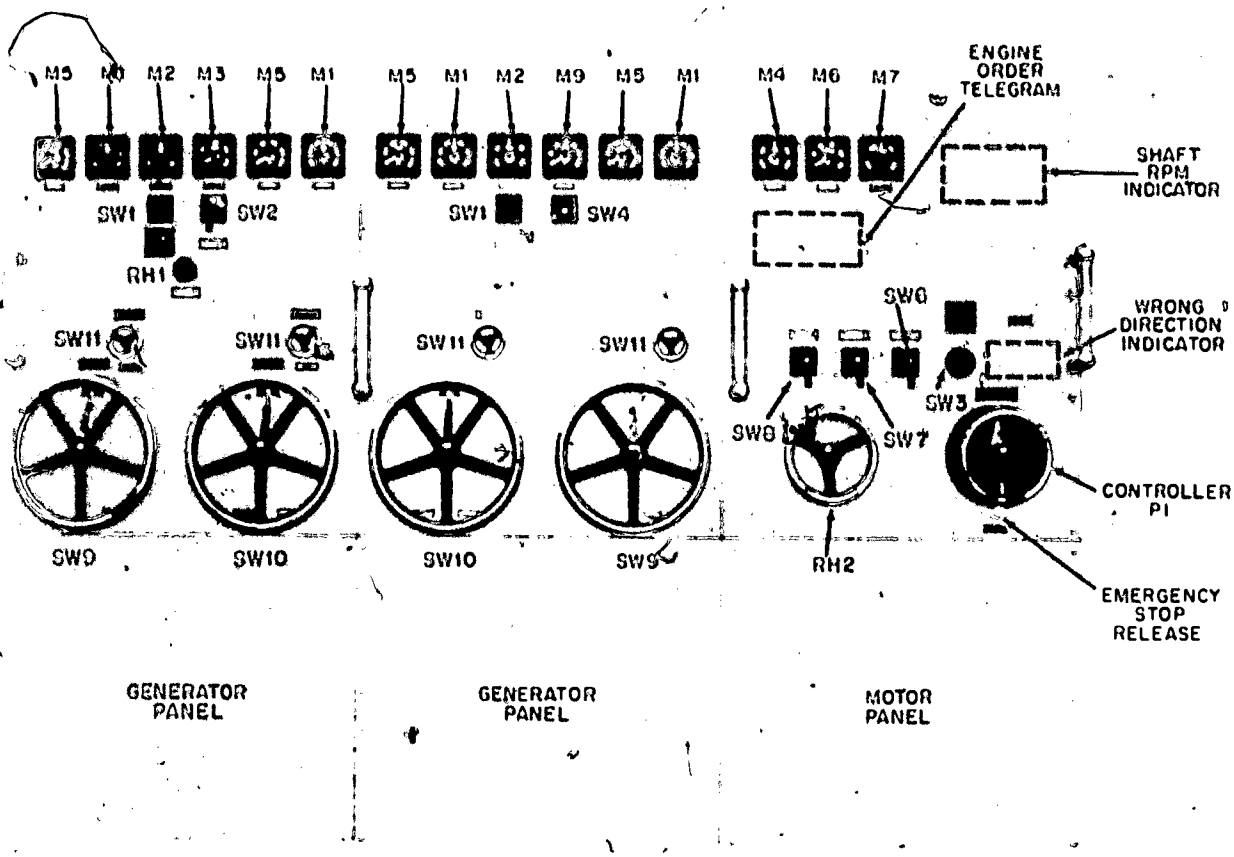

M1-GENERATOR VOLTMETER, 500-0-500
M2-EXCITER AND GROUND DETECTOR VOLTMETER, 100-0-100
M3-AUXILIARY POWER AMMETER, 0-200
M4-MOTOR AND GROUND DETECTOR VOLTMETER, 1000-0-1000
M5-ENGINE SPEED INDICATOR, 0-100
M6-MOTOR FIELD AMMETER, 0-150
M7-MOTOR AMMETER, 3000-0-3000
M8-PILOT HOUSE MOTOR AMMETER, 3000-0-3000 (NOT SHOWN)
M9-EXCITATION VOLTMETER (SHIP'S SERVICE), 0-300
SW1-EXCITER VOLTMETER AND GROUND DETECTOR TRANSFER SWITCH
SW2-AUXILIARY POWER GENERATOR FIELD CONTROL SWITCH
SW3-MOTOR VOLTMETER AND GROUND DETECTOR TRANSFER SWITCH
SW4-EXCITER VOLTMETER AND GENERATOR FIELD GROUND DETECTOR TRANSFER SWITCH
SW5-ENGINE SPEED-EXCITER FIELD SWITCH ON GENERATOR SET-UP SWITCH (NOT SHOWN)
SW6-ENGINE SPEED CONTROL SWITCH
SW7-EXCITATION CONTROL SWITCH
SW8-PILOT HOUSE-ENGINEROOM TRANSFER SWITCH
SW9-10-GENERATOR SET-UP SWITCHES
SW11-GENERATOR CONTROL SWITCH
RH1-AUXILIARY POWER GENERATOR FIELD RHEOSTAT
RH2-MOTOR FIELD RHEOSTAT
P1-ENGINEROOM CONTROLLER

27.100

Figure 4-7.—Propulsion control equipment-fleet tug.

and subchasers will develop approximately 1,800 hp; while some of the engines in the smaller yard craft will develop from 190 to 225 hp. A typical diesel engine is shown in figure 4-8.

Some diesel engines are directly reversible. This means that the propeller shaft is connected directly to the diesel engine, so that the speed of the propeller shaft is controlled by the speed of the diesel engine. When it becomes necessary to change the direction of rotation of the propeller shaft, the diesel engine must be stopped, the cam shaft of the engine must be shifted for reverse rotation, and then the engine is restarted. This allows the engine to operate in the opposite direction; thus reversing the rotational direction of the propeller shaft. You can see that this would take time and be very hard to do if sudden changes in direction were required.

To eliminate this stopping-starting situation and to make a smoother transition from forward to reverse in less time, reverse-reduction gears, clutches, and hydraulic couplings are used. (These are discussed in the following sections of this chapter.)

CONVERTING POWER TO DRIVE

The basic characteristics of a propulsion unit make it necessary, in most instances, for the

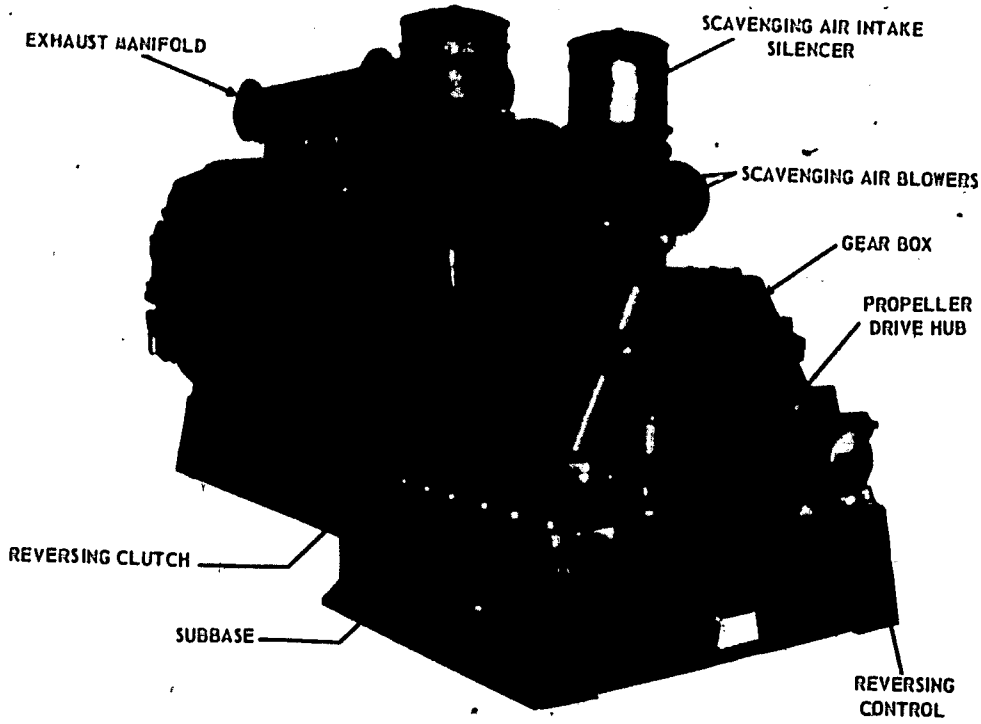

44

75.44X

Figure 4-8.—Typical diesel engine and reduction gear.

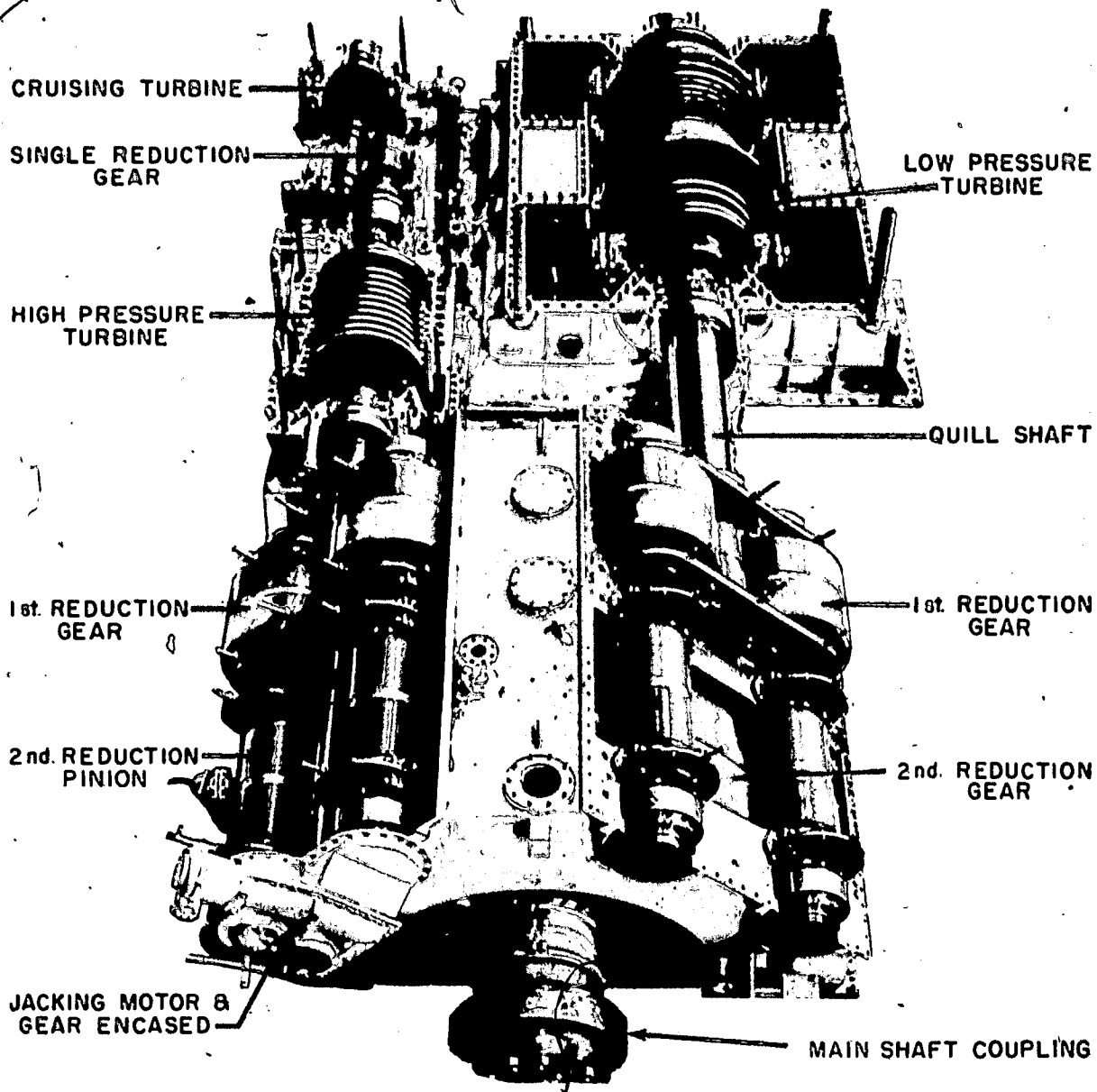

47.30

Figure 4-9.—Turbine and locked train double reduction gearing installed on a DD-692 class destroyer.

drive mechanism to change both the speed and the direction of shaft rotation. In order that both the engine and the propeller may operate efficiently, the engine in many installations includes a device which permits a speed reduction from the engine to the propeller shaft. This device, which is a combination of gears and which effects the speed reduction, is called a reduction gear.

REDUCTION GEARS

Turbines must operate at relatively high speeds for maximum efficiency, whereas

propellers must operate at lower speeds for maximum efficiency. Reduction gears are used, therefore, to allow both the turbine and the propeller to operate within their most efficient revolutions per minute (rpm) ranges. A typical reduction gear illustration is shown in figure 4-9.

The use of reduction gears is by no means limited to ship propulsion. Other steam turbine-driven machinery, such as ship's service generators and various pumps, also has reduction gears. In these units of machinery, as well as in shipboard propulsion units, turbine operating efficiency requires a higher rpm range than that suitable for the driven unit.

Reduction gearing in many current combatant ships makes use of double helical gears. The use of double helical gears produces a smoother action of the reduction gearing and avoids tooth shock. Since the double helical gear has two sets of teeth at complementary angles to each other, the end thrust, such as developed in single helical gears, is thereby eliminated.

Reduction gears are classified by the number of steps used to bring about the speed reduction and the arrangement of the gearing. A gear mechanism consisting of a pair of gears or a small gear (pinion) driven by the turbine shaft, which drives a large (bull) gear on the propeller shaft directly, is called a SINGLE REDUCTION GEAR. In this type of arrangement the ratio of speed reduction is proportional to the diameter of the pinion and the gear. For example, in a 2 to 1 single reduction gear the diameter of the driven gear is twice that of the driving pinion; and in a 10 to 1 single reduction gear, the diameter of the driven gear is 10 times that of the driving pinion.

Ships built since 1935 have DOUBLE REDUCTION PROPULSION GEARS. In this type of gear, a high-speed pinion, connected to the turbine shaft by a flexible coupling, drives an intermediate (first reduction) gear which is connected by a shaft to the low-speed pinion; this, in turn, drives the bull gear (second reduction) mounted on the propeller shaft. For example, a 20 to 1 (6000-300) speed reduction might be accomplished by having a ratio of 2 to 1 (6000-3000) between the high-speed pinion and the first reduction gear, and a ratio of 10 to 1 (3000-300) between the low-speed pinion on the first reduction shaft and the second reduction gear on the propeller shaft

$$(6000 \div 2 = 3000 \div 10 = 300).$$

For a typical example of a double reduction application, let us consider the main reduction gear installation on a DD-692 class destroyer, shown in figure 4-9.

The cruising turbine is connected to the high pressure turbine through a single reduction gear. The cruising turbine rotor carries with it a pinion which drives the cruising gear (coupled to the high pressure turbine shaft). The cruising turbine rotor and pinion are supported by three bearings, one at the forward end of the turbine and one on each side of the pinion in the cruising reduction gear case.

The high pressure and low pressure turbines are connected to the propeller shaft through a locked-train type double reduction gear, shown in figure 4-10. (Note: This type of reduction gear is used aboard many naval combatant ships.) First reduction pinions are connected by flexible couplings to the turbines. Each of the first reduction pinions drives two first reduction gears. A second reduction (slow speed) pinion is attached to each of the first reduction gears by a quill shaft and flexible couplings. These four

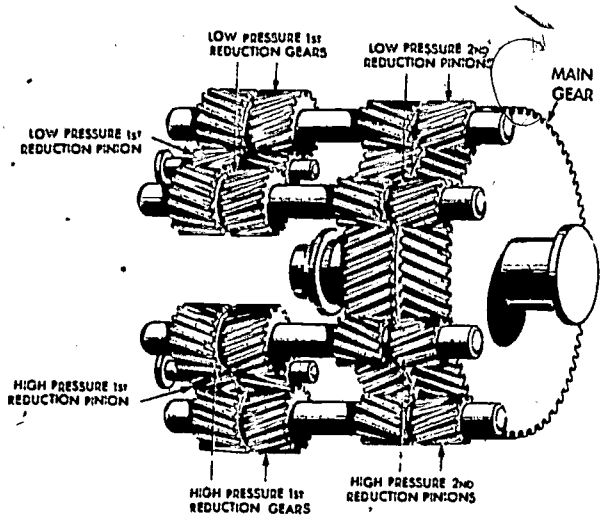

47.27

Figure 4-10.—Locked-train type gearing.

pinions drive the second reduction (bull) gear which is attached to the propeller shaft.

CLUTCHES AND REVERSE GEARS

Clutches are normally used on direct-drive propulsion engines to provide a means of disconnecting the engine from the propeller shaft. In small engines clutches are usually combined with reverse gears and are used for maneuvering the ship. In large engines special types of clutches are used to obtain special coupling or control characteristics and to prevent torsional (twisting) vibration.

Reverse gears are used on marine engines to reverse the direction of rotation of the propeller shaft, during maneuvering, without changing the direction of rotation of the engine. They are used principally on relatively small engines. If a high-output engine has a reverse gear, the gear is used for low-speed operation only and does not have full-load and full-speed capacity. For maneuvering ships with large direct-propulsion engines, the engines are reversed.

Diesel propelling equipment on a boat or a ship must be capable of providing backing-down power as well as forward power. There are a few ships and boats in which backing down is accomplished by reversing the pitch of the propeller; in most ships, however, backing down is accomplished by reversing the direction of rotation of the propeller shaft. In mechanical drives, reversing the direction of rotation of the propeller shaft may be accomplished in one of two ways; by reversing the direction of engine rotation or by using the reverse gears.

The drive mechanism of a ship or a boat is required to do more than reduce speed and reverse the direction of shaft rotation. It is frequently necessary to operate an engine without having power transmitted to the propeller. For this reason, the drive mechanism of a ship or boat must include a means of disconnecting the engine from the propeller shaft. Devices which are used for this purpose are called clutches.

The arrangement of the components depends on the type and size of the installation. In some small installations, the clutch, the reverse gear, and the reduction gear may be combined in a single unit; in other installations, the clutch and the reverse gear may be in one housing and the reduction gear in a separate housing attached to the reverse gear housing.

In large engine installations, the clutch and the reverse gear may be combined; or they may be separate units, located between the engine and a separate reduction gear; or the clutch may be separate and the reverse gear may be combined.

In most geared-drive, multiple propeller ships the propulsion units are independent of each other. An example of this type of arrangement is illustrated in figure 4-11.

In some installations the drive mechanism is arranged so that two or more engines drive a single propeller. This is accomplished by having the driving gear, which is on—or connected to—the crankshaft of each engine, transmit power to the driven gear on the propeller shaft. In one type of installation, each of two propellers is driven by four diesel engines (quad power unit). The arrangement of the engines, the location of the reduction gear, and the direction of rotation of the crankshaft and the propeller shaft in one type of "quad" power unit are illustrated in figure 4-12.

The drive mechanism illustrated includes four clutch assemblies (one mounted to each engine flywheel) and one gear box. The box contains two drive pinions and the main drive gear. Each pinion is driven by the clutch shafts of two engines, through splines in the pinion hubs. The pinions drive the single main gear, which is connected to the propeller shaft.

Friction clutches are commonly used with smaller, high-speed engines, up to 500 hp. However, certain friction clutches, in combination with a jaw type clutch, are used with engines up to 1,400 hp; and pneumatic clutches, with a cylindrical friction surface are used with engines up to 2,000 hp.

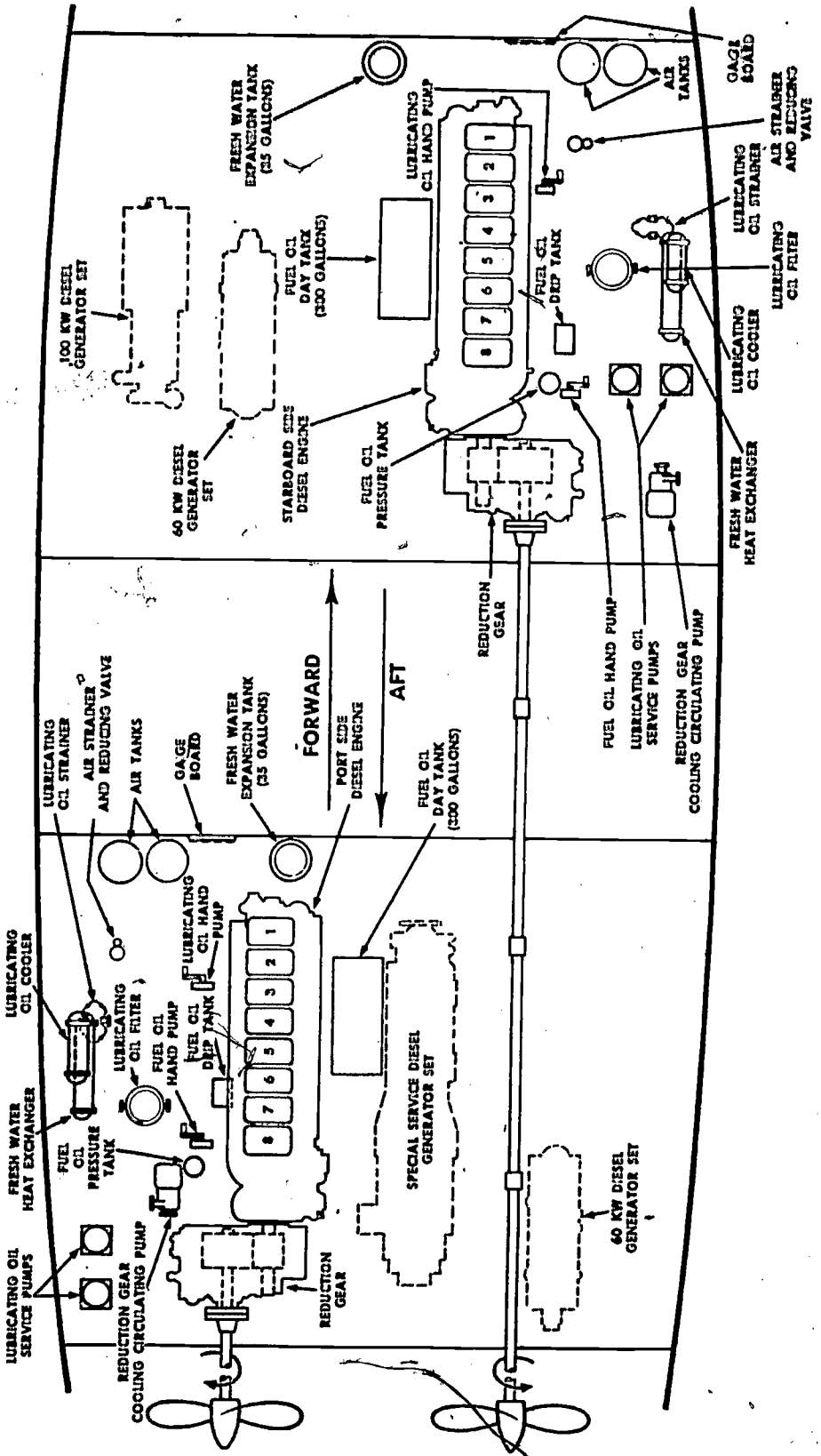

75.248

Figure 4-11.—Example of independent propulsion units.

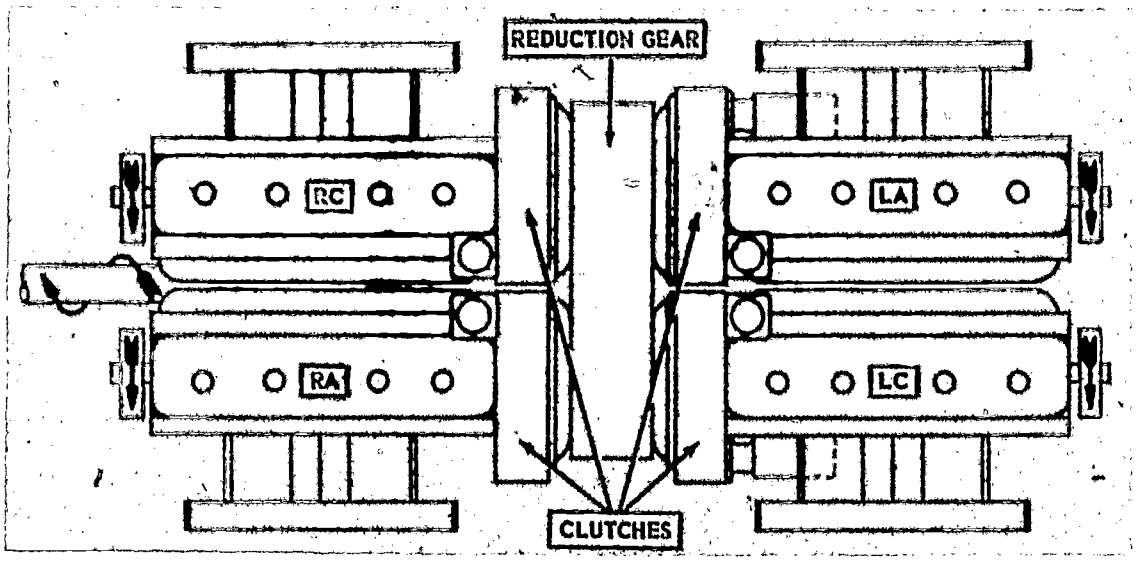

75.249X

Figure 4-12.—Four engines (quad unit) arranged to drive one propeller (GM 6-71).

Friction clutches are of two general styles; the disk and the bank styles. In addition, friction clutches can be classified as dry or wet types, depending on whether the friction surfaces operate with or without a lubricant. The designs of both types are similar, except that the wet clutches require a large friction area because of the reduced friction coefficient between the lubricated surfaces. The advantages of wet clutches are smoother operation and less wear of the friction surfaces. Wear results from slippage between the surfaces not only during engagement and disengagement, but also, to a certain extent, during the operation of the mechanism. Some wet type clutches are filled with oil periodically; in other clutches the oil is a part of the engine-lubricating system and is circulated continuously. Such a friction clutch incorporates provisions which will prevent worn-off particles from being carried by the circulating lubricating oil to the bearings, gears, etc.

The friction surfaces are generally constructed of different materials, one being of cast iron or steel; others are lined with some asbestos-base composition or bronze for dry clutches, and bronze, cast iron, or steel for wet clutches. Cast iron surfaces are preferred because of their better bearing qualities and greater resistance to scoring or scuffing.

Force-producing friction is needed to engage the friction clutches and can be obtained either by mechanically jamming the friction surfaces together by some toggle-action linkage, or through stiff springs (coil, leaf, or flat-disk type). The operation of friction clutches is discussed in the paragraphs which follow.

TWIN-DISK CLUTCH AND GEAR MECHANISM.—One of the several types of transmissions used by the Navy is the Gray Marine transmission mechanism. Gray Marine high-speed diesel engines are generally equipped with a combination clutch and a reverse and reduction gear unit—all contained in a single housing at the after end of the engine.

The clutch assembly of the Gray Marine transmission mechanism is contained in the part of the housing nearest the engine. It is a dry type, twin-disk clutch with two driving disks. Each disk is connected through shafting to a separate reduction gear train in the after part of

the housing. One disk and reduction train is for reverse rotation of the shaft and propeller; the other disk and reduction train is for forward rotation.

JOE'S CLUTCH AND REVERSE GEAR.—A typical gear mechanism found on many power boats is Joe's clutch and reverse gear, shown in figure 4-13. The drive from the engine crankshaft is taken into the clutch and reverse gear housing by an extension of the crankshaft drive gear. The crankshaft rotation is transmitted to the reduction gear shaft through the clutch and the reverse gear unit.

AIRFLEX CLUTCH AND GEAR ASSEMBLY.—On the larger diesel-propelled ships, the clutch, reverse, and reduction gear unit has to transmit an enormous amount of power. To maintain the weight and size of the mechanism as low as possible, special clutches have been designed for large diesel installations. One of these is the airflex clutch and gear assembly used with General Motors 12-567A engines on LST's.

A typical airflex clutch and gear assembly for AHEAD and ASTERN rotation, is shown in figure 4-14. There are two clutches, one for forward rotation and one for reverse rotation. The clutches, bolted to the engine flywheel, both rotate with the engine at all times at engine speed. Each clutch has a flexible tire (or gland) on the inner side of a steel shell. Before the tires are inflated, they will rotate out of contact with the drums, which are keyed to the forward and reverse drive shafts. When air under pressure (100 psi) is sent into one of the tires, the inside

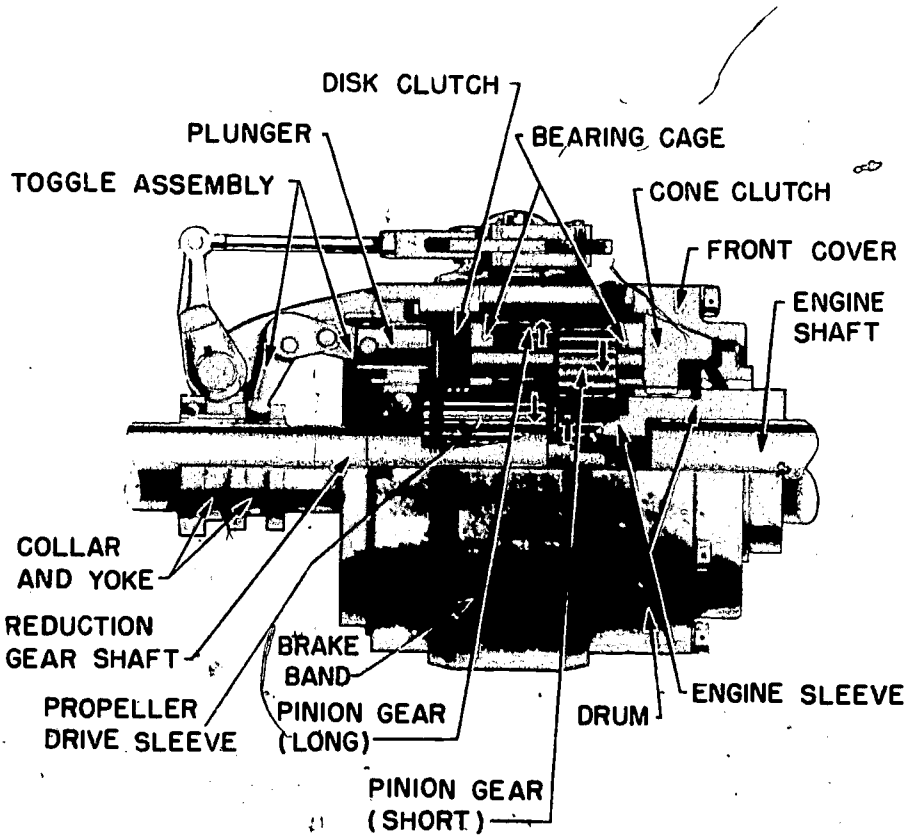

75.254

Figure 4-13.—Cutaway view of Joe's clutch and reverse gear.

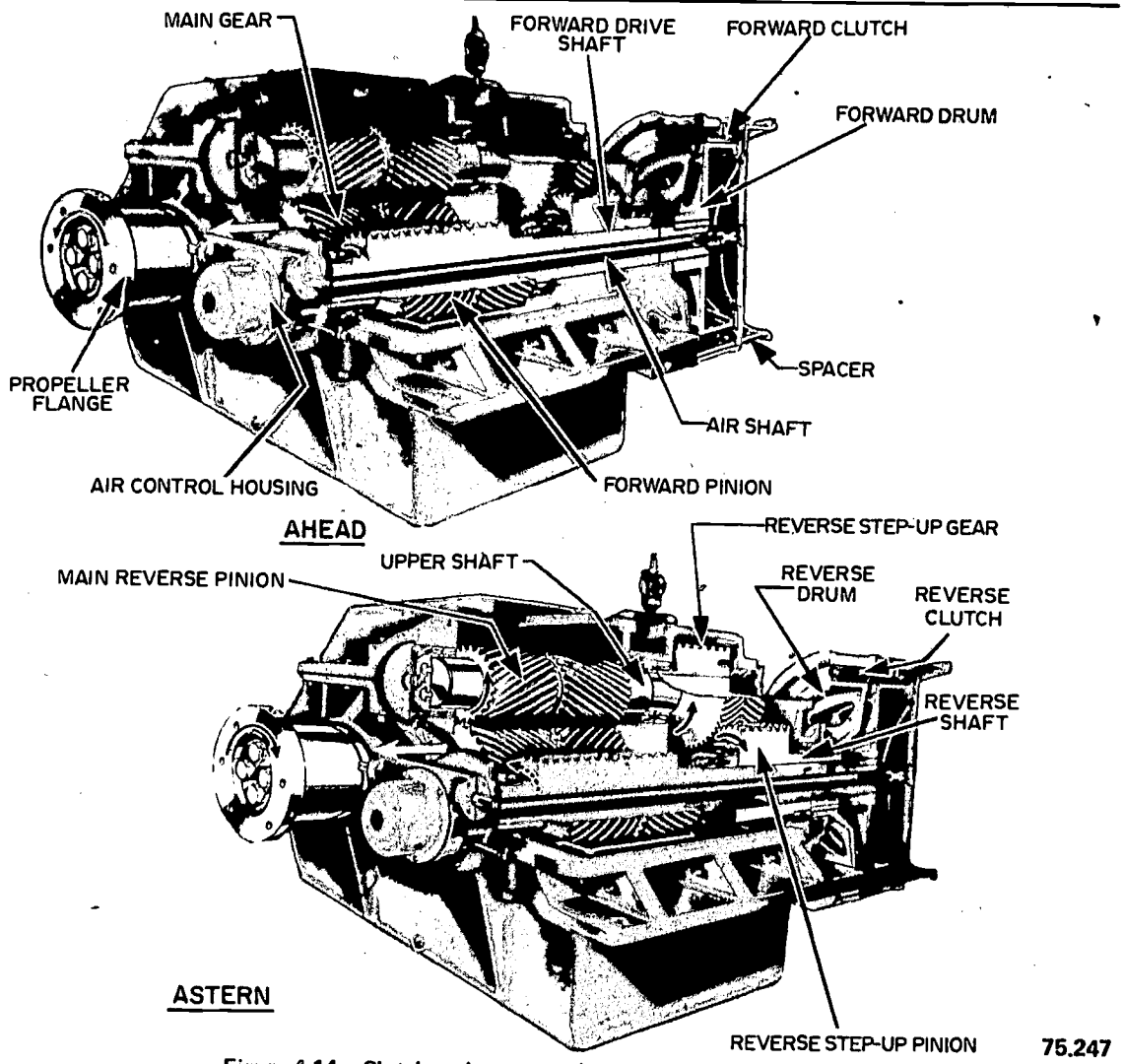

Figure 4-14.—Clutch and reverse-reduction gear assembly.

diameter of the clutch decreases. This causes the friction blocks on the inner tire surface to come in contact with the clutch drum, locking the drive shaft with the engine.

HYDRAULIC CLUTCHES OR COUPLINGS.—The fluid clutch (coupling) is widely used on Navy ships. The use of a hydraulic coupling eliminates the need for a mechanical connection between the engine and the reduction gears. Couplings of this type operate with a small amount of slippage.

Some slippage is necessary for operation of the hydraulic coupling, since torque is transmitted because of the principle of relative motion between the two rotors. The power loss resulting from the small amount of slippage is transformed into heat which is absorbed by the oil in the system.

Compared with mechanical clutches, hydraulic clutches have a number of advantages. There is no mechanical connection between the driving and driven elements of the hydraulic coupling. Power is transmitted through the coupling very efficiently (97 percent) without transmitting torsional vibrations, or load shocks, from the engine to the reduction gears. This

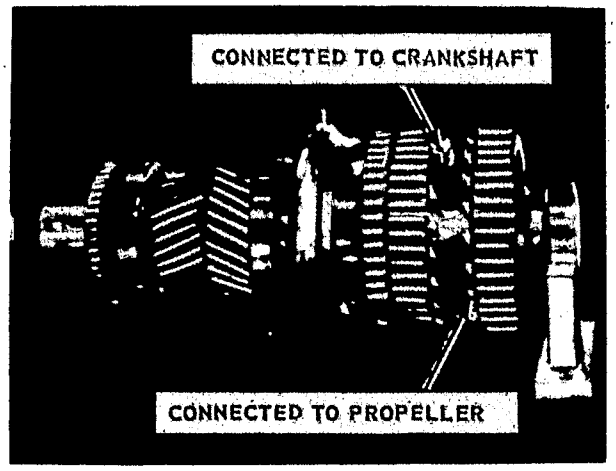

75.264

Figure 4-15.—Dog clutches.

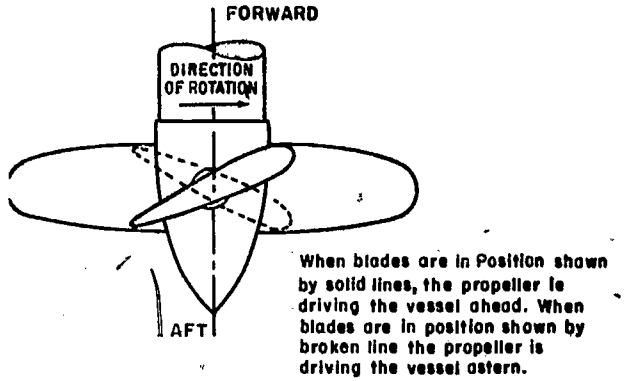

139.56

Figure 4-17.—Schematic diagram of a controllable pitch propeller.

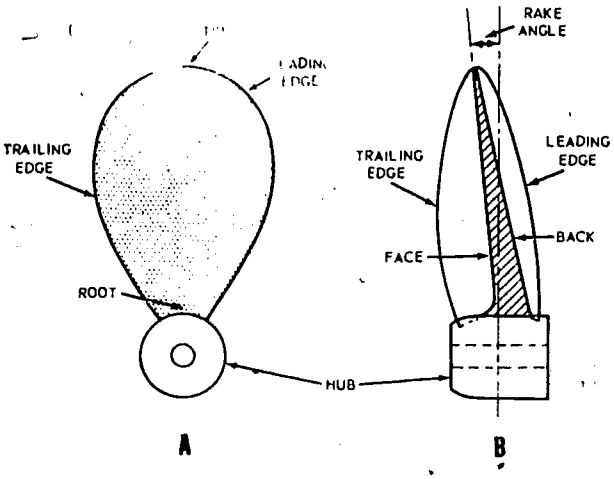

147.46

Figure 4-16.—Propeller blade.

protects the engine, the gears, and the shafting from sudden shock loads which may occur as a result of piston seizure or fouling of the propeller. The power is transmitted entirely by the circulation of a driving fluid (oil) between radial passages in a pair of rotors. In addition, the assembly of the hydraulic coupling will absorb or allow for slight misalignment.

DOG CLUTCHES.—Dog-type clutches perform much the same function as the friction type in that they allow the engine shaft to be disconnected from the propeller shaft. The dog clutch ensures a positive drive without slippage and with a minimum amount of wear. (Forward drive is generally accomplished by one set of dogs, shown in figure 4-15, connected to the crankshaft, engaging and turning another set of dogs, connected to the propeller shaft.)

In several installations, the dog clutch is used in addition to a friction clutch; the dog clutch is engaged after the friction (or synchronizing) clutch brings the two shafts to an equal speed. The engagement of the dog clutch eliminates slippage and holds friction clutch wear to a minimum.

PROPELLER

The screw-type propeller consists of hub and blades (usually three or four) all spaced at equal angles about the axis. When the blades are integral with the hub, the propeller is known as a SOLID propeller. When the blades are separately cast and secured to the hub with studs, the propeller is referred as a BUILT-UP propeller.

Some of the parts of the screw propeller are identified in figure 4-16. The FACE (or pressure face) is the afterside of the blade when the ship is moving ahead. The BACK (or suction back) is the surface opposite the face. As the propeller

rotates, the face of the blade increases pressure on the water to move it in a positive astern movement. The overall thrust, or reaction force ahead, comes from the increased water velocity moving astern.

The TIP of the blade is the most distant from the hub. The ROOT of the blade is the area where the blade joins the hub. The LEADING EDGE is the edge which first cuts the water when the ship is going ahead. The TRAILING EDGE (also called the following edge) is opposite the leading edge.

A RAKE ANGLE exists when the tip of the propeller blade is not precisely perpendicular to the axis (hub). The angle is formed by the distance between where the tip really is (forward or aft) and where the tip would be if it were in perpendicular position.

A screw propeller may be broadly classified as FIXED PITCH OR CONTROLLABLE PITCH. The pitch of a fixed pitch propeller cannot be altered during operation; the pitch of a controllable pitch propeller can be changed at any time, subject to bridge or engineroom control. The controllable pitch propeller can reverse the direction of a ship without requiring a change of direction of the drive shaft. The blades are mounted so that each one can swivel or turn on a shaft which is mounted in the hub, as shown in figure 4-17. Most propellers in naval ships are of the fixed pitch type, but some controllable pitch propellers are in service.

53

CHAPTER 5

BASIC STEAM CYCLES

In addition to knowing how steam is generated, you must know what happens to steam after it leaves the boiler. One of the best ways to learn about the steam plant on your own ship is to trace the path of steam and water throughout its entire cycle of operation. In this chapter, the main steam cycle and the auxiliary steam cycle are discussed. In each of these cycles the water and the steam circulate throughout the entire cycle of operation without ever being exposed to the atmosphere.

A discussion follows of the four basic areas of operation in a steam cycle, shown in figure 5-1: part A—generation; part B—expansion; part C—condensation; and part D—feed.

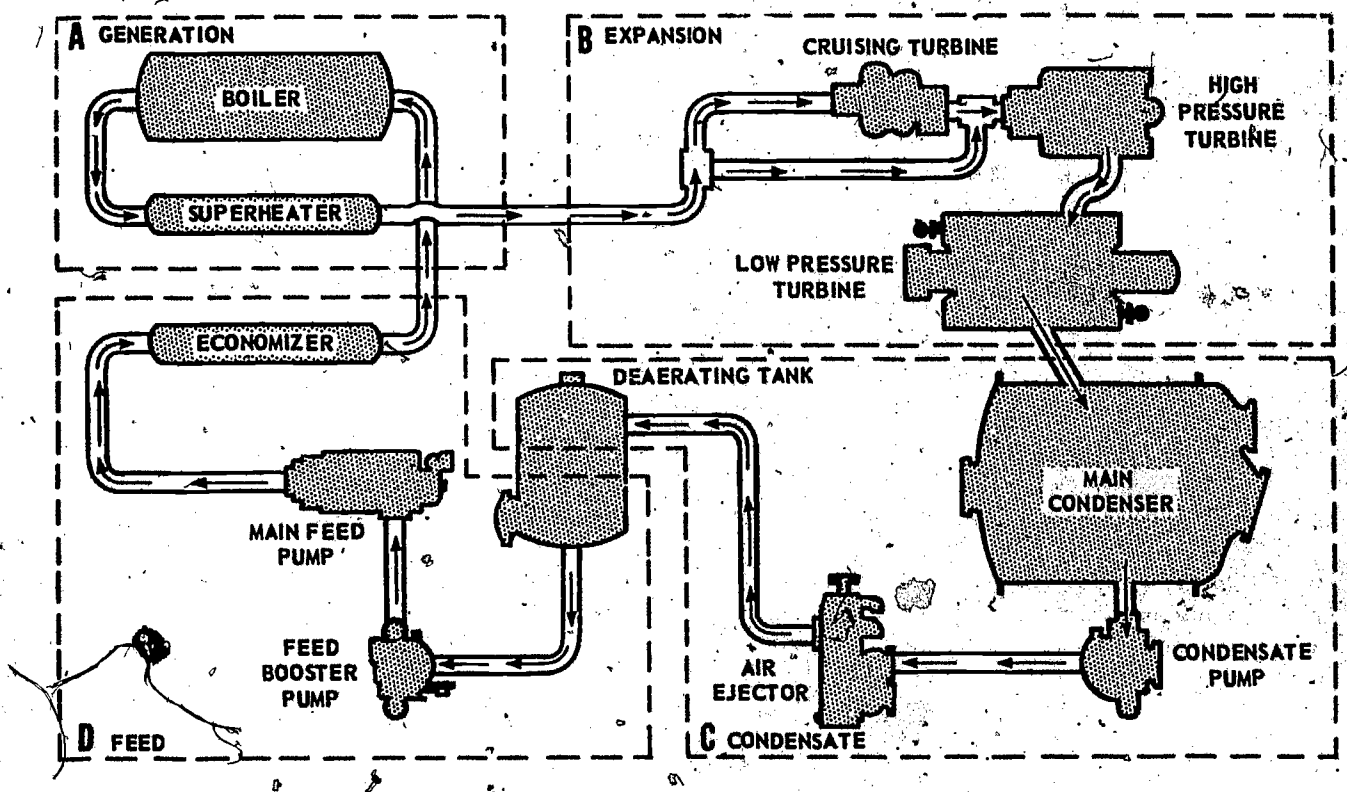

38.2

Figure 5-1.—Diagrammatic, arrangement of the main steam cycle.

MAIN STEAM CYCLE

GENERATION

To generate steam, it is first necessary to heat water to its boiling point and then add a sufficient amount of heat to change (convert) the boiling water into steam. The heat required to change boiling water into steam, at any given temperature of the boiling water, is called the latent heat of vaporization. When steam condenses back to water (at boiling point), an equal amount of heat is given off; it is called the latent heat of condensation. The amount of heat required to convert boiling water to steam, or the amount of heat given off when steam is condensed back to water at its boiling temperature, varies with the pressure under which the process takes place. Part A of figure 5-1 illustrates the generation area of the cycle.

There are definite pressure-temperature relationships involved in the generation of steam. The boiling point of water is 212° F at sea level, where the atmospheric pressure is 14.7 psi. At higher altitudes, where atmospheric pressure is reduced, water boils at a lower temperature. If the pressure is increased, the boiling temperature of water will also be increased. In a boiler operating under a pressure of 600 psig, water must be heated to approximately 489° F to make it boil. In boilers operating under a pressure of 1000 psig, water must be heated to approximately 544° F to make it boil. Therefore, the boiling point of water is determined by the pressure.

It is important to note that the temperature of steam is determined by the temperature at which the water boils, as long as the process is taking place in a closed vessel or in a closed system such as a boiler. As long as the pressure remains constant, steam in contact with the water from which it is being formed must remain at the same temperature as the boiling water. Therefore, in a boiler operating under a pressure of 600 psig, the temperature of the steam in the steam drum must be approximately 489° F—the same temperature as the boiling water. (The steam drum of the boiler is a sealed chamber that holds the water and steam.)

The steam in the steam drum is called SATURATED STEAM—this is steam which has not been heated above the temperature of the water from which it was generated. Saturated steam is used aboard ship to operate most of the auxiliary equipment and also in the various types of heaters.

It is impossible to raise the temperature of saturated steam without also increasing the pressure as long as the steam is in contact with the water from which it is formed. However, the steam can be heated above its saturation temperature if it is first drawn off into another vessel, where it is no longer in contact with the water, and if additional heat is applied. Steam which has been heated above its saturation temperature is known as SUPERHEATED STEAM. The device which allows this extra heat to be added to the steam is known as a SUPERHEATER. Figure 5-2 shows a simple form of both a boiler and a superheater.

Most naval propulsion boilers are equipped with superheaters. Superheated steam has many advantages over saturated steam for use in propulsion machinery. Because the steam is dry, it causes relatively little corrosion or erosion of piping and machinery. In addition, superheated steam does not conduct heat as rapidly as saturated steam; therefore, it does not lose heat as rapidly. The use of superheated steam for propulsion purposes greatly increases the overall efficiency of the engineering plant; this increased efficiency results in large savings in fuel consumption, and in space and weight requirements.

Since most auxiliary machinery is designed to operate on saturated steam, naval boilers are designed to produce both saturated and superheated steam.

EXPANSION

The expansion portion of the main steam cycle is that part of the cycle in which steam is led from the boilers to the main turbines and expanded in those turbines to remove the heat energy stored in the steam and to transform that

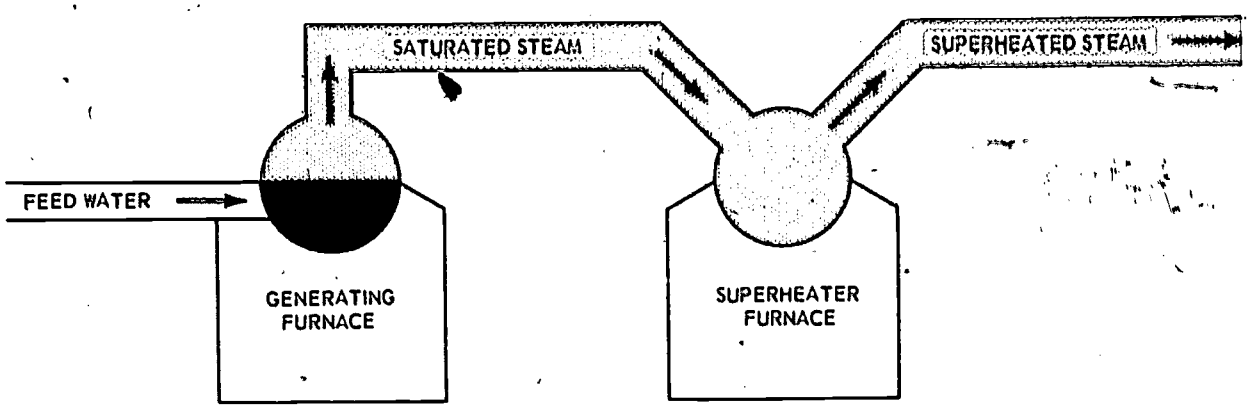

38.3

Figure 5-2.—Elementary boiler and superheater.

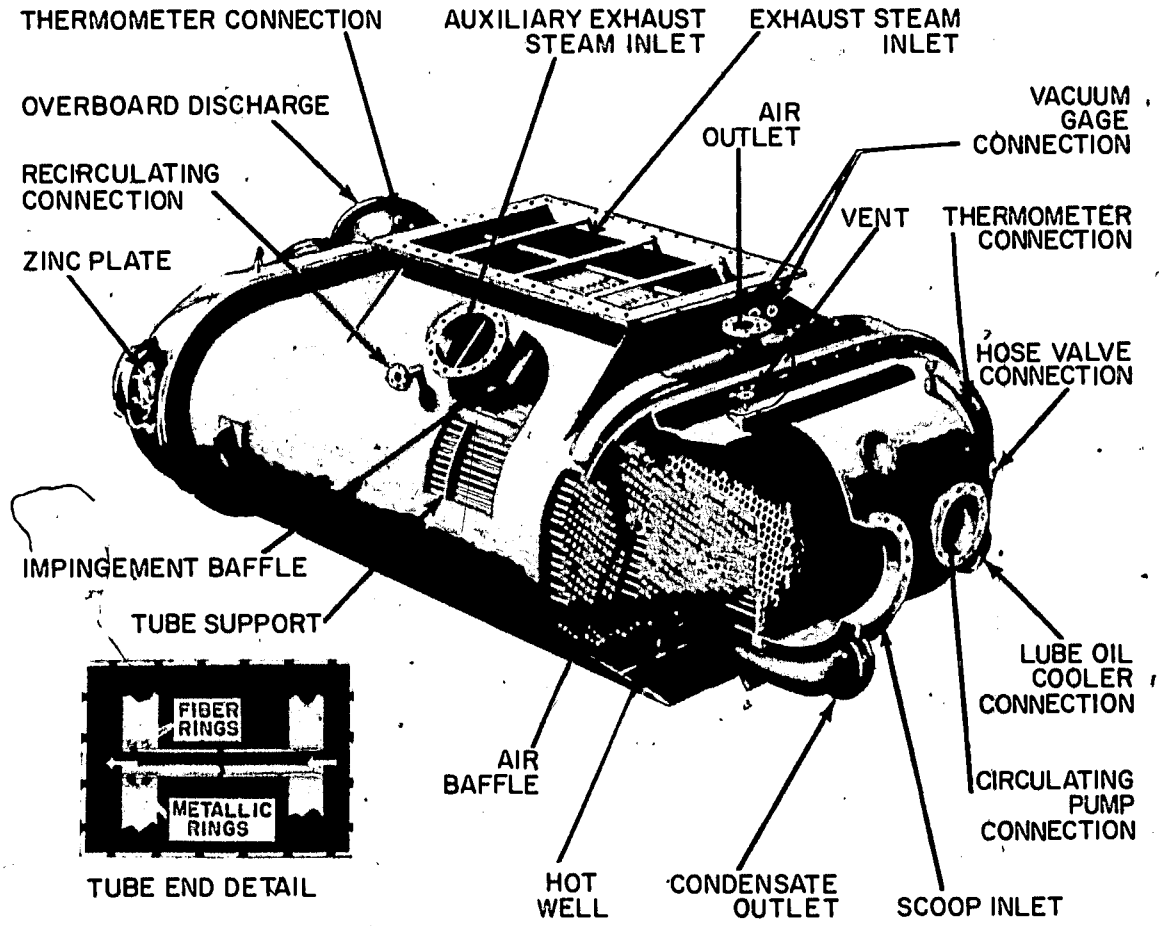

47.70X

Figure 5-3.—Cutaway view of a main condenser.

energy into mechanical energy of rotation. The main steam system is the piping system which leads the steam from the boilers to the main turbines.

The main turbines generally consist of the cruising turbine, high pressure turbine, and the low pressure turbine. The steam may flow into the cruising turbine, then to the high pressure turbine and on into the low pressure turbine; or the cruising turbine may be bypassed. Some main turbine installations do not have a cruising turbine. Part B of figure 5-1 illustrates the expansion portion of the main steam cycle; it contains the cruising turbine, high pressure turbine, and low pressure turbine.

CONDENSATION

Since each ship must produce sufficient quantities of feed water for the boilers and since a marine engineering plant must be as efficient as possible, the feed water must be used over and over again.

As the steam leaves or exhausts from the low pressure turbine, it enters the condensate system. The condensate system is that part of the steam cycle in which the steam condenses to water and flows from the main condenser (fig. 5-3) toward the boilers while it is being prepared for use as feed water.

The several components of the condensate system, in sequence, from the low pressure turbine are: (1) main condenser, (2) main condensate pump, and (3) the main air ejector. (See fig. 5-4.) These components are shown in part C of figure 5-1.

The main condenser receives the steam from the low pressure turbine and condenses the steam into water. The main condensate pump takes suction from the main condenser and delivers the condensate into the condensate piping system and through the main air ejector. As its name implies, the air ejector removes the air that was picked up in the main condenser. The condensate, after passing through the air ejector, enters the vent condenser section of the deaerating feed tank before entering the tank.

FEED

The deaerating feed tank (fig. 5-5) is sometimes considered as the dividing line between condensate and feed water. This tank

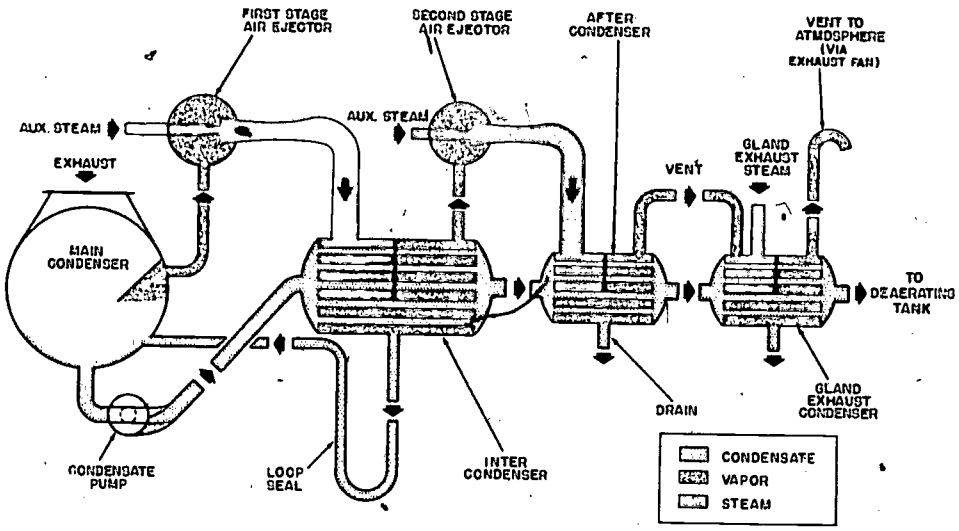

47.77X

Figure 5-4.—Flow diagram of a two-stage air ejector.

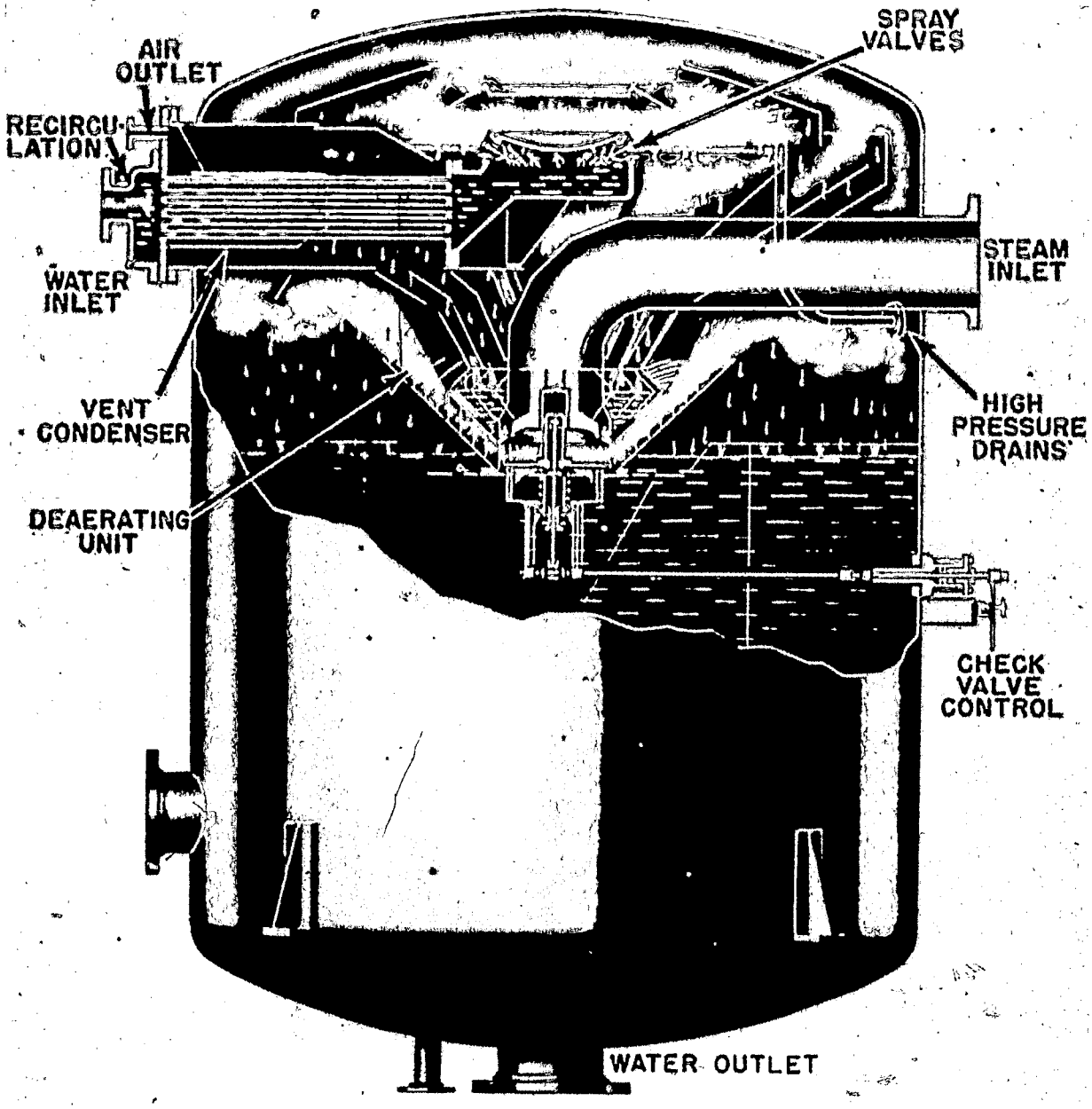

38.17

Figure 5-5.—Deaerating feed tank.

has three basic functions: (1) to free the condensate of all trapped oxygen and air, (2) to heat the water to a degree which will allow the economizer to introduce all the remaining necessary heat before discharging it to the boiler, and (3) to act as a reservoir in which to store water to take care of rapid increases in feed needs and to absorb sudden increases or surges of the condensate.

As the condensate enters the deaerating feed tank, it is sprayed into the dome of the tank by nozzles. Here it is discharged in a fine spray throughout the steam-filled top or preheater. The break up of the condensate into a fine spray releases the trapped oxygen and air from the condensate. The air-free, oxygen-free condensate falls to the bottom of the tank, while the air and oxygen are exhausted from the tank.

The condensate that is collected in the storage section of the deaerating feed tank is now called feed water and becomes a source of supply for the main feed booster pump. The main feed booster pump takes suction from the deaerating feed tank and maintains a constant discharge pressure to the main feed pump.

The main feed pump picks up the water (delivered from the booster pump) and discharges it into the main feed piping system. Part D of figure 5-1 illustrates the path of the water from the deaerating feed tank to the economizer. The discharge pressure of the main feed pump is usually about 150 psi greater than the boiler operating pressure. For example, the discharge pressure of a main feed pump, discharging to a boiler operating at 600 psi, will normally be 750 psi. The discharge pressure is maintained throughout the main feed piping system; however, the quantity of water discharged to the economizer is controlled by a feed stop and check valve or automatic feed water regulator valve.

The economizer is positioned on the boiler to perform one basic function; that is, to act as a preheater. The gases of combustion flow around the economizer tubes which absorb some of the heat of combustion, and the economizer in turn heats the water that is flowing through the economizer tubes. As a result the water is approximately 100° F hotter as it flows out of the economizer to the boiler.

AUXILIARY STEAM CYCLE

The generation section of the auxiliary steam cycle is the same as the main steam cycle. The main difference is that the auxiliary steam does not go through a superheater. Therefore, the auxiliary steam in all cases is a saturated steam.

Another difference occurs between the generation and expansion sections. Note that in figure 5-6, the line that carries the steam to the auxiliary equipment (where expansion takes place) has a number of lines leading to various pieces of equipment such as main feed pumps, main feed booster pumps, main condensate pumps, main lube oil pumps, and steam reducing valves, just to name a few pieces of equipment, serviced by the various tap offs. In the main steam cycle, only the main turbines are serviced by the main steam line. Another major difference is that after expansion has taken place, the exhaust steam does not go directly into the main or auxiliary condenser (fig. 5-7) but goes into an auxiliary exhaust header and then to either the main or auxiliary condenser via an unloading valve (fig. 5-8). Normally, in port the auxiliary steam plant will be used. The unloading valve associated with the plant that is in operation will be used. The unloading valve maintains about 10-15 pounds of exhaust steam pressure on the exhaust steam header for plant efficiency.

The condensation section of the steam cycle is the same process in both the main and auxiliary steam cycles. The system where salt water is used in a heat exchanger (main or auxiliary condenser) to turn the low pressure or exhaust steam back to condensate for future use is called a condensing section. The basic difference is that the main condenser will not always be used as a heat sink in the auxiliary steam cycle. As stated before, in most cases in port you will be using the auxiliary condenser and the associated auxiliary equipment will be used to operate the auxiliary steam plant.

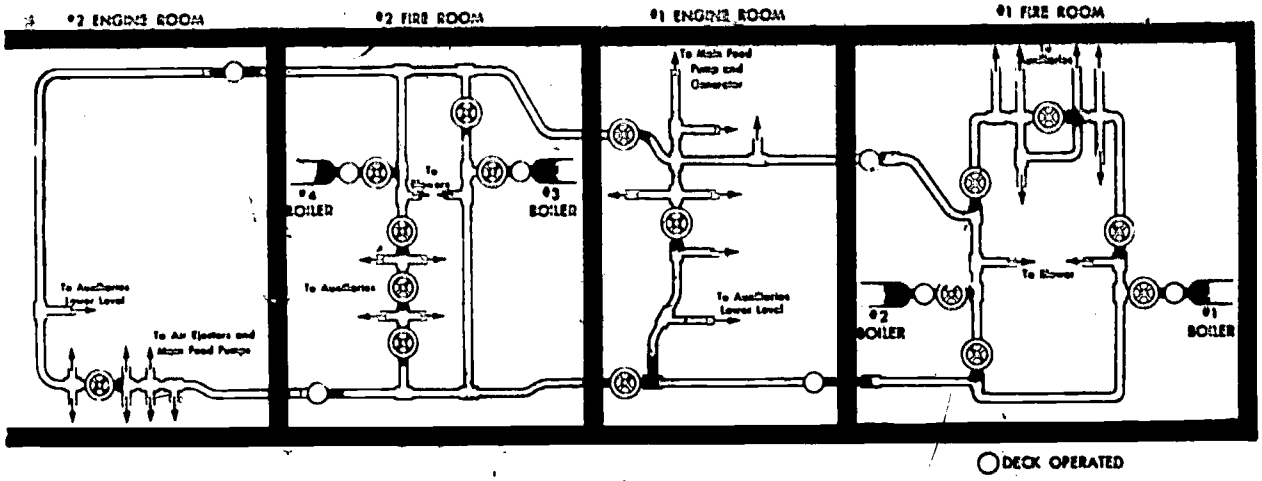

38.18

Figure 5-6.—Auxiliary steam system.

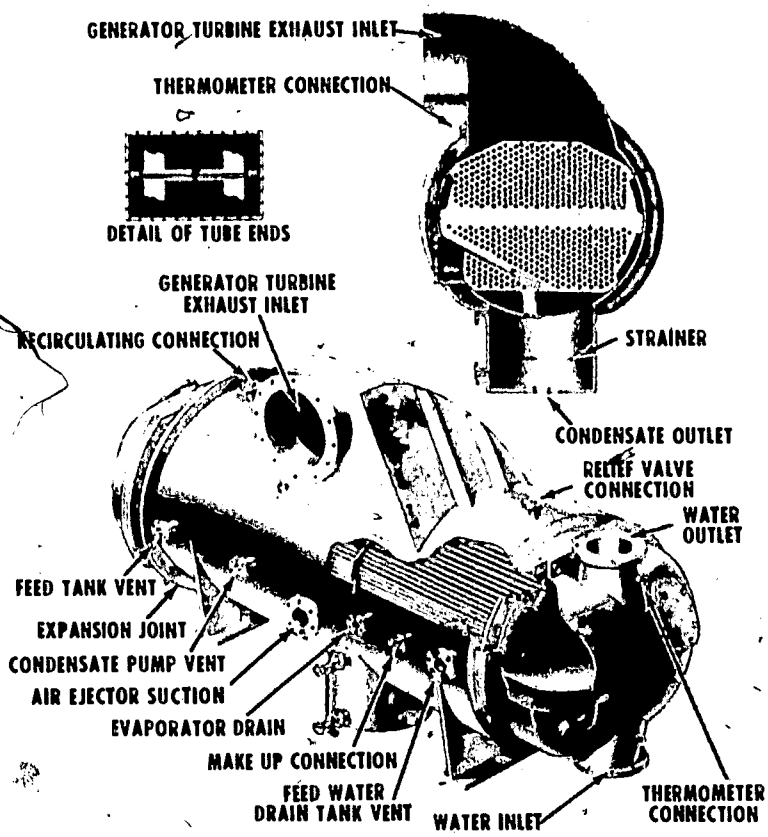

47.71

Figure 5-7.—Auxiliary condenser.

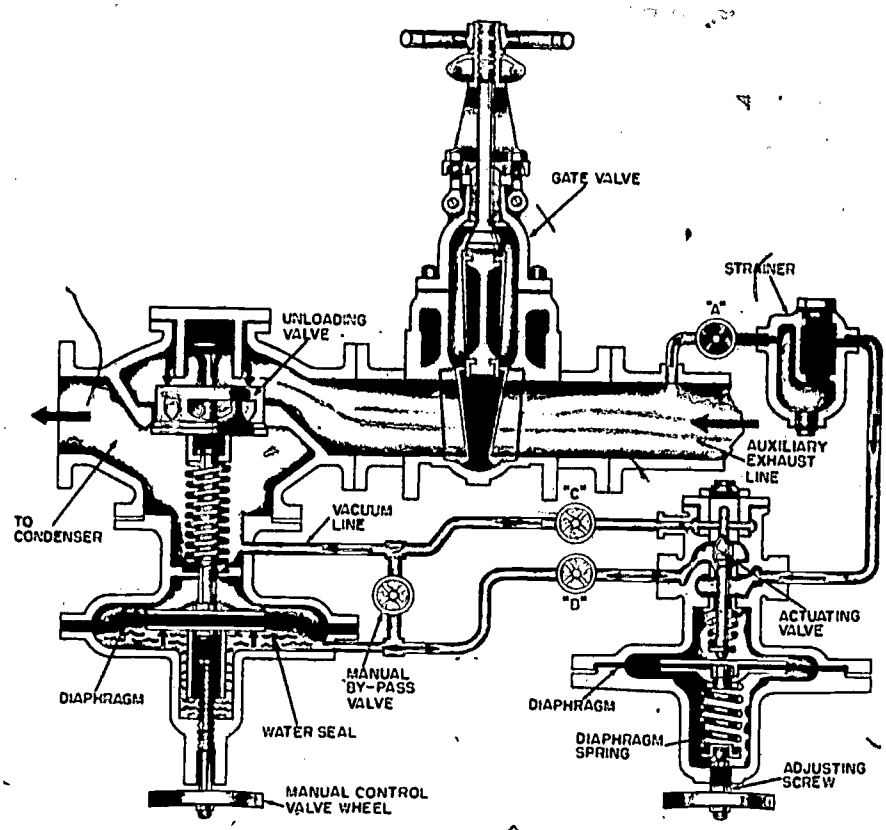

47.61

Figure 5-8.—Swartwout unloading valve.

The feed system is the same with one major difference, that is, in port an auxiliary feed booster pump (electric driven) can be used instead of the main feed booster pump to take suction on the deaerating feed tank. This auxiliary pump can be used to supply the head of water to the emergency feed pump (a reciprocating pump) instead of the main feed pump which, in turn, will feed the water back to the boilers to be converted back to steam.

CHAPTER 6

BOILERS

This chapter gives you basic information on boilers and their operating principles. We shall discuss boiler construction and the major parts and their functions. Also, you will find numerous fireroom safety precautions which must be observed when boilers are being fired.

BOILER ASSEMBLY

A boiler is that part of the steam cycle in which water is converted into steam. The boiler consists of metal drums, headers and tubes, and accessories for controlling steam pressure and temperature and other aspects of boiler operation. You will also find a furnace with casing and uptake; steam and water drums; generating, circulation, and water screen tubes; a superheater; an economizer; and the necessary piping and accessories to ensure an ample supply of fuel, water, and air.

A cutaway view of a D-type boiler is shown in figure 6-1. As we continue our discussion on boiler assembly, imagine that you are assembling a similar boiler. As you add each part to your boiler, follow the line drawing that describes the position of that part.

The steam drum (fig. 6-2) is a cylinder, located at the top of the boiler, and it runs lengthwise from the front to the back of the boiler. The steam drum provides a space for the accumulation of steam generated in the tubes and for the separation of moisture from the steam. It also serves as a storage space for boiler water, which is distributed from the steam drum to the downcomer tubes. (During normal operation, the steam drum is kept about half full of water.) In addition to these basic functions, the steam drum either contains or is connected to many of the important controls and fittings required for the operation of the boiler.

At the bottom right side of the boiler you will find the water drum and on the bottom left side is another drum, the header, or sidewall header, shown in figure 6-3. The waterdrum is larger than the header, but both are smaller than the steam drum. They equalize the distribution of water to the generating tubes and collect the deposits of loose scale and other solid matter which may be present in the boiler water. The drum and header each has a blowdown valve. When the valve is opened, some of the water is forced out of the drum or header and carries the loose scale, sediment, or dirt with it.

At each end of the steam drum are a number of large tubes (fig. 6-4) that lead to the water drum and sidewall header. These tubes are the downcomers through which water flows downward from the steam drum to the water drum and the header. The downcomers range in diameter from 3 to 8 inches.

A great number of other tubes also link the steam drum to the water drum and the steam drum to the header. The several rows of tubes that lead from the steam drum to the water drum are the generating tubes (fig. 6-5) which are arranged in the furnace so the gases and the heat of combustion can flow around them. The large arrows in figure 6-5 show the direction of flow of the combustion gases.

The generating tubes are made of steel that is strong enough to withstand the high pressures

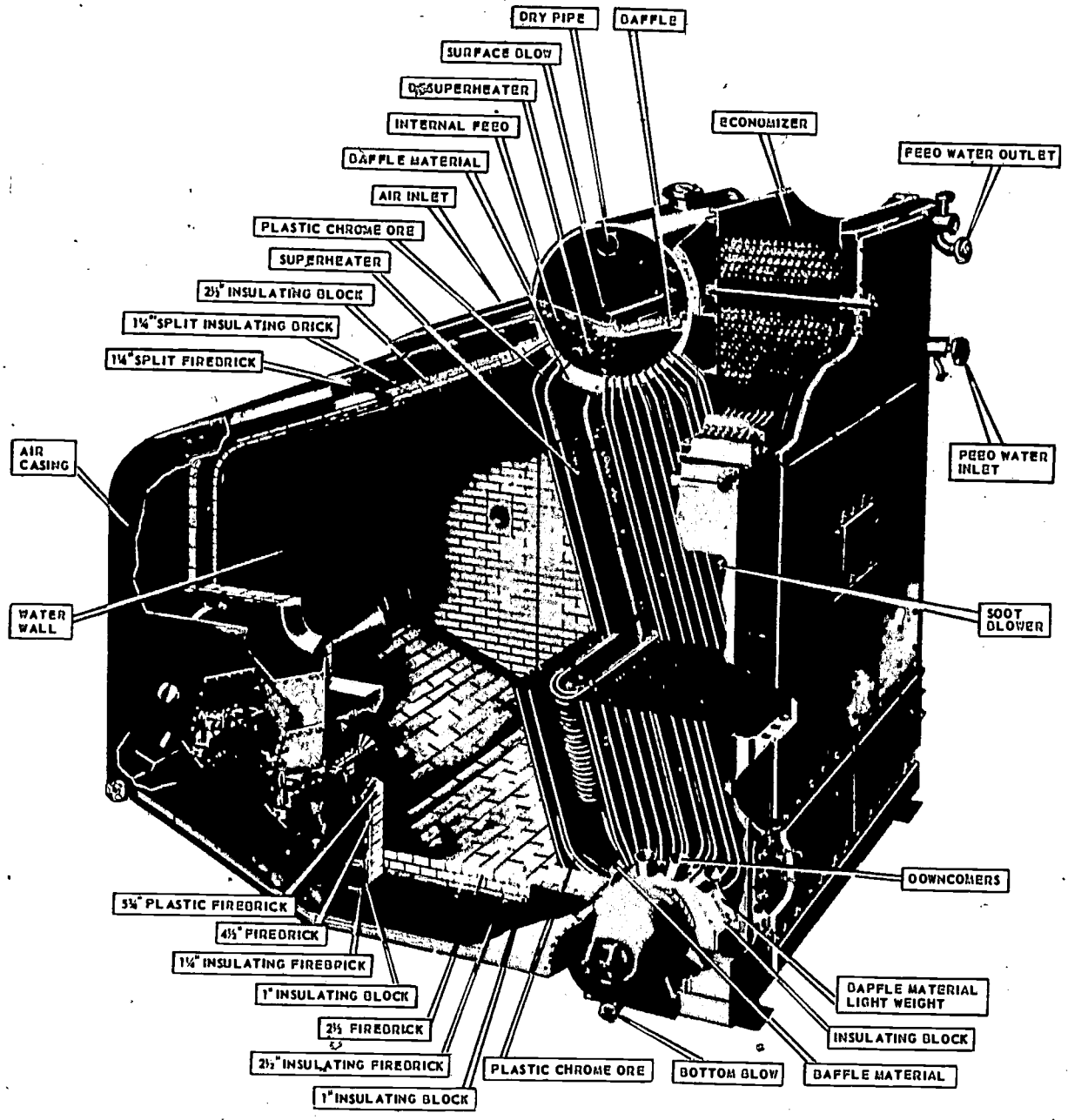

38.40

Figure 6-1.—Cutaway view of a D-type boiler (older type).

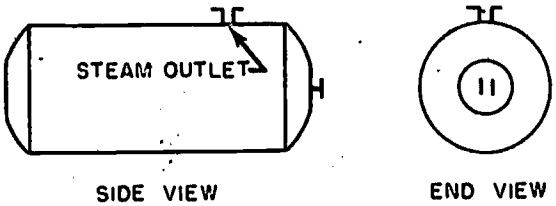

139.13

Figure 6-2.—Steam drum.

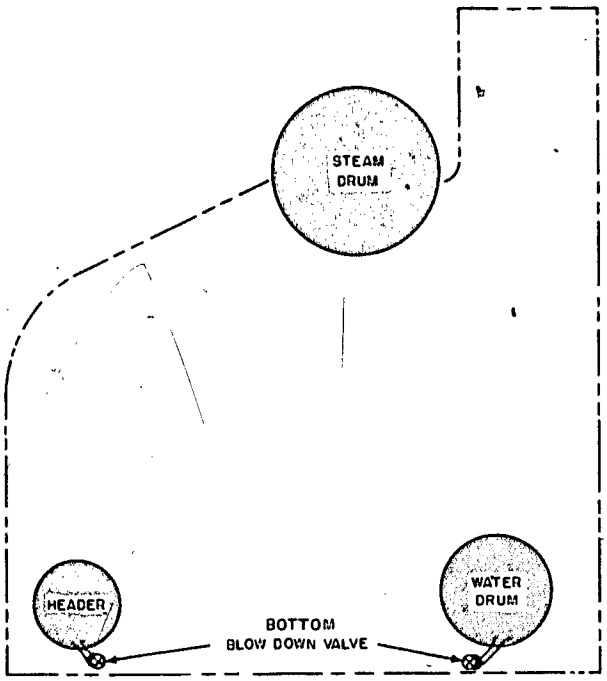

139.14

Figure 6-3.—Steam drum, water drum and header.

and temperatures within the boiler. In most boilers these tubes are usually 1 to 2 inches in diameter, but there may be some that are 3 inches. These small tubes present a large surface area to absorb the heat in the furnace. Note that a 2-inch tube has twice the surface area of a 1-inch tube, but four times the volume. A 3-inch tube has 3 times the surface area of a 1-inch tube, but 9 times the volume. The smaller the diameter of the tube, the higher is the ratio of absorption surface to the volume of water.

Normally there is only one row of generating tubes leading from the steam drum to the

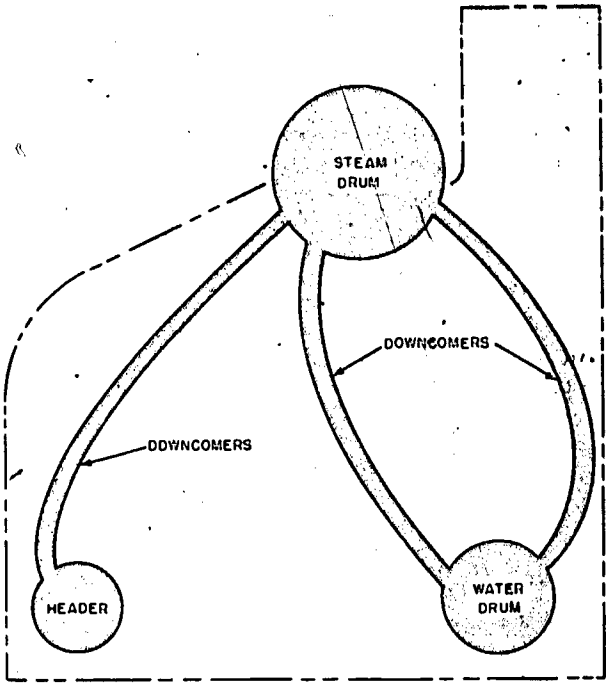

139.15

Figure 6-4.—Addition of downcomer tubes.

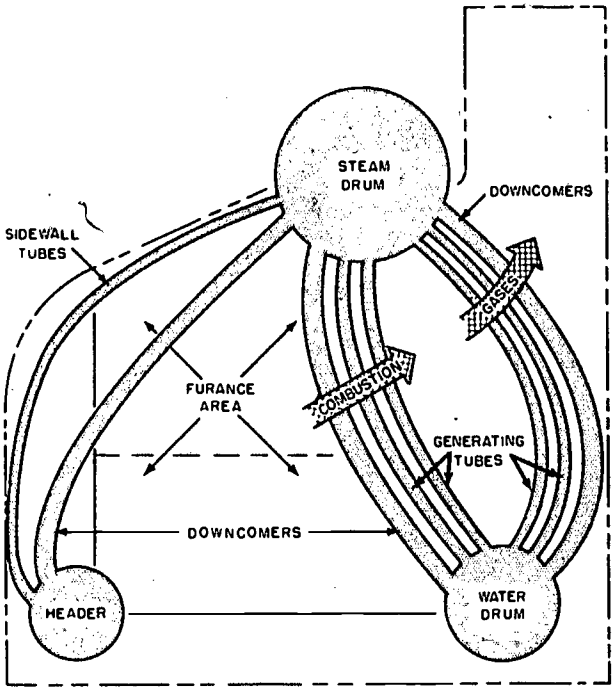

139.16

Figure 6-5.—Adding generating tubes and furnace area.

sidewall header. These are the sidewall (water wall) tubes which provide a cooling effect to protect the side wall of the furnace.

So far we have assembled the drums, header, downcomers, and the generating tubes. Before going any further with the assembly, let us trace the path of the water through the boiler. The water flows out of the steam drum down through the downcomers into the water drum and the sidewall header. As the water is heated it forms a vapor (steam) that is lighter than the water in which it is contained. The steam rises through the generating tubes and returns to the steam drum. The arrows in figure 6-6 show the circulation path of the boiler water as it leaves the steam drum and as it returns to the steam drum as steam.

The furnace, or firebox (fig. 6-5) is the large, room-like space where air and fuel are mixed for the combustion of the fuel (fire). The fire heats the water that is in the drums, tubes, and headers.

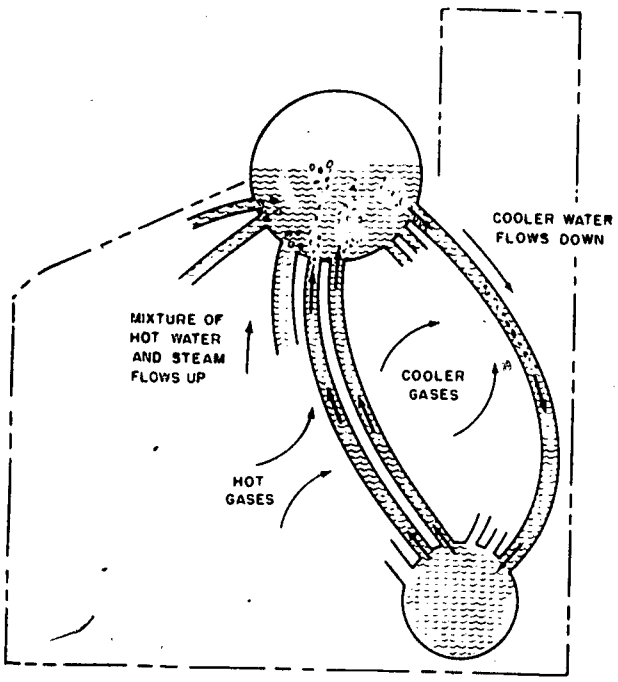

139.17

Figure 6-6.—Natural circulation (accelerated type).

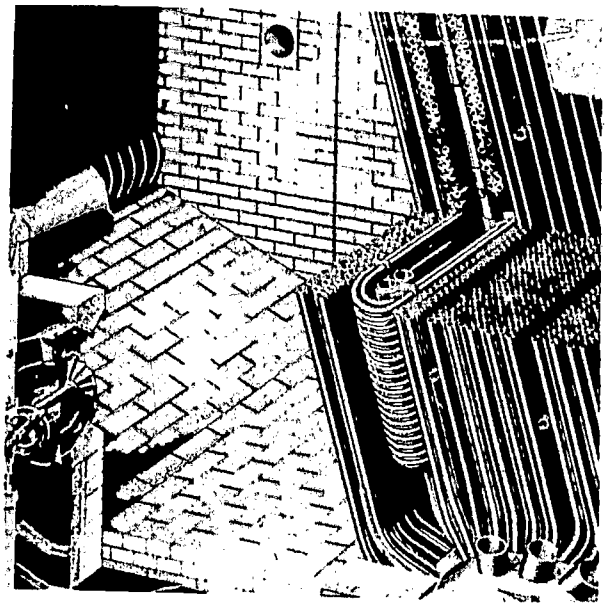

38.40

Figure 6-7.—Refractory lined furnace.

The furnace is more or less a rectangular steel casing which is lined on the floor, front wall, side walls, and rear wall with refractory (heat resisting) material. Refractory materials used in naval boilers include firebrick, insulating brick, plastic firebrick, and air-setting mortar.

The refractory lining protects the furnace steel casing and prevents the loss of heat from the furnace. The refractories retain heat for a relatively long period of time and thus help to maintain the high furnace temperatures that are needed for complete combustion of the fuel. Figure 6-7 shows a refractory lined furnace.

There are many different types of refractories. Each type is used according to its physical and chemical properties which determine the refractory's location within the furnace. Some refractory materials can withstand greater temperatures than others and are positioned nearer to the intense heat of the fire.

In chapter 5 you discovered that an economizer is positioned on the boiler (fig. 6-8) where it acts as a pre-heater. It absorbs heat

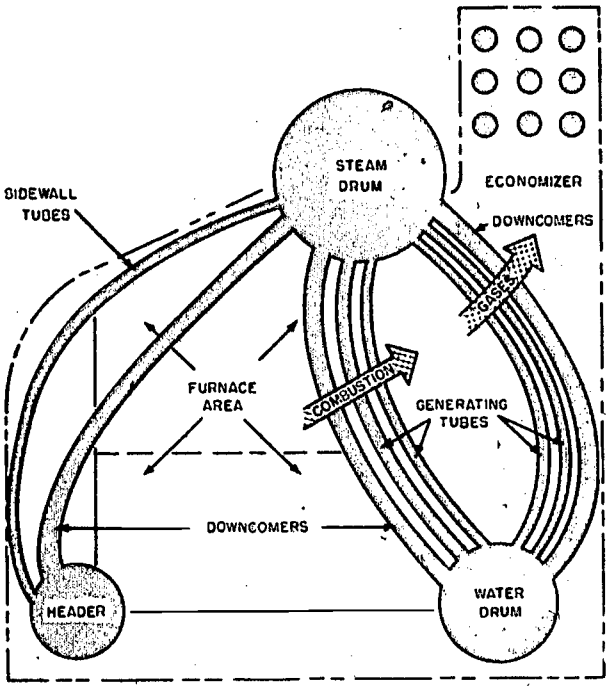

139.18

Figure 6-8.—Relative position of economizer.

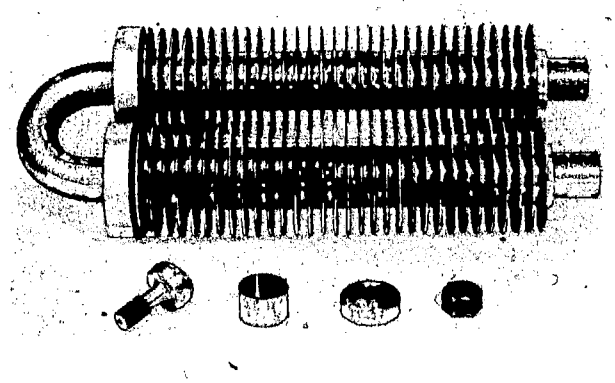

38.28

Figure 6-9.—U-bend economizer tube with aluminum gill rings.

from the furnace and transmits this heat to the incoming feed water. The economizer is made up of a number of tubes which are illustrated in figure 6-9. The fins on the tube absorb the heat from the gases of combustion and in turn transfer the heat to the incoming feed water.

One more basic component is needed to complete the water-steam flow path. From your study of the steam cycle do you remember what that component might be? In chapter 5 you were told that the steam, as it leaves the steam drum on its way to the main turbines, passes through a superheater.

The superheater (fig. 6-10) is constructed of a number of U-shaped tubes which are installed horizontally projecting forward into the furnace. The superheater tubes are connected to the superheater headers which are installed vertically at the rear of the boiler; one end of the tube enters one header and the other end of the tube enters the other header. (Some superheaters are of the vertical type with horizontal headers.)

The superheater tubes are so positioned in the boiler that they are surrounded by the generating tubes. They are also placed so the hot gases of combustion flow over and around them. Figure 6-11 shows the relative position of the superheater tubes installed in the boiler. You have now assembled the major parts of the boiler. Look again at the assembled boiler shown in figure 6-1. Identify the component parts and review their functions.

FUEL OIL BURNERS

Now that you have assembled the major components of the basic boiler, you are ready to inject the fuel and air into the furnace where combustion takes place. Look at the fuel oil burners that are mounted on the boiler front (fig. 6-12). The complete burner assembly consists of the atomizer, the air registers, and the valves and fittings needed to connect the atomizer to the fuel line.

ATOMIZERS

The atomizers divide or break up the fuel oil into very fine particles as illustrated in figure 6-13. There are three major types of atomizers in use on naval boilers. Straight-through-flow atomizers are found in the oldest ships. The return-flow atomizers (fig. 6-13) are used on many of the newer ships; you may also find steam-assist atomizers on some of the newer ships.

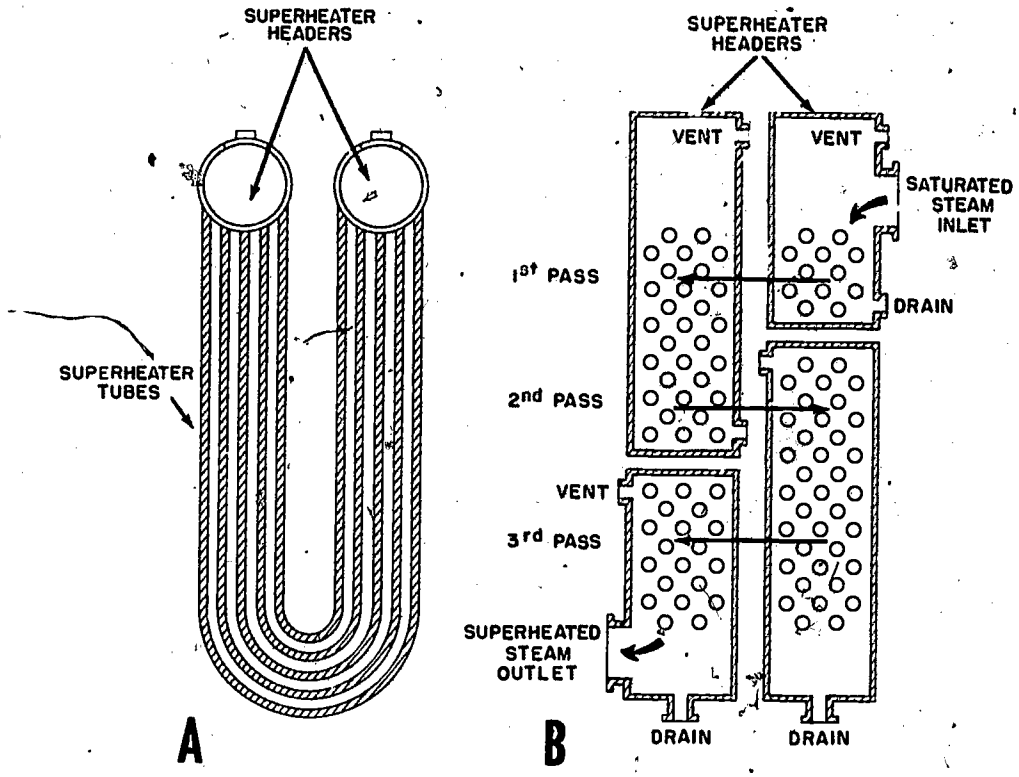

Figure 6-10.—Diagrammatic arrangement of superheater.

38.23

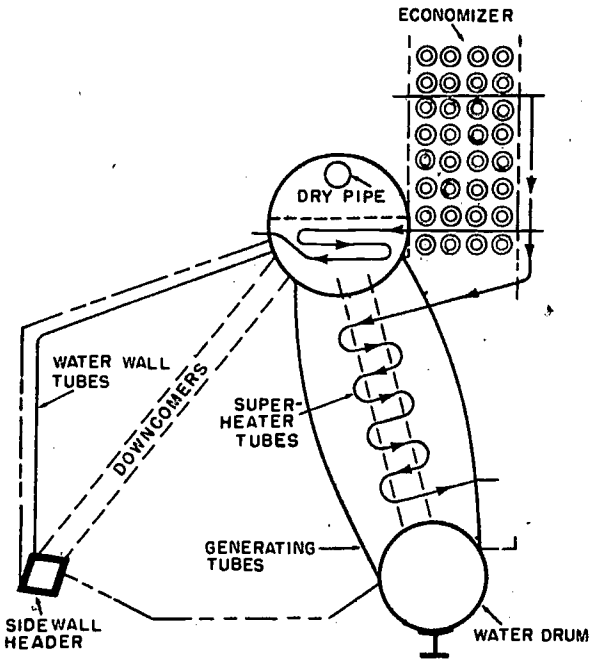

38.39

Figure 6-11.—Relative position of superheater tubes.

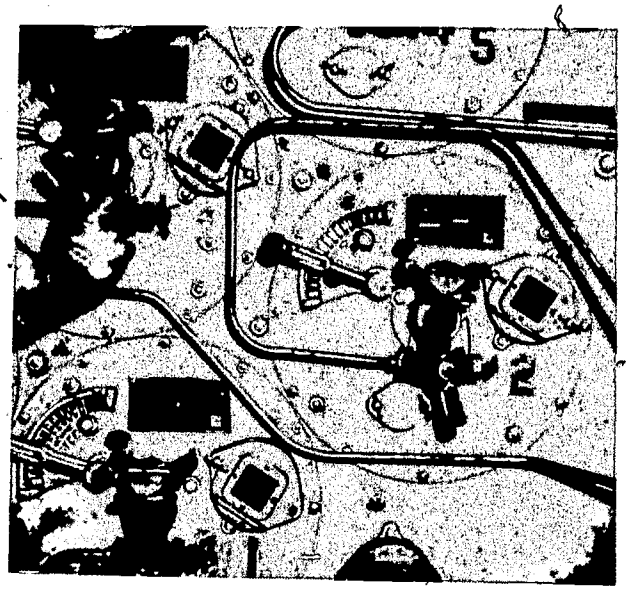

38.70

Figure 6-12.—Babcock and Wilcox Caroline-type fuel oil burners installed on a boiler front.

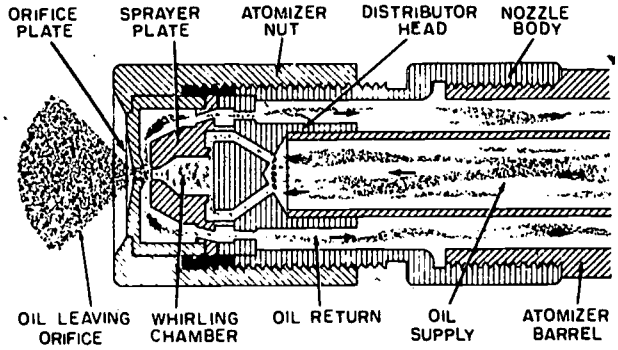

38.75

Figure 6-13.—Return-flow atomizer.

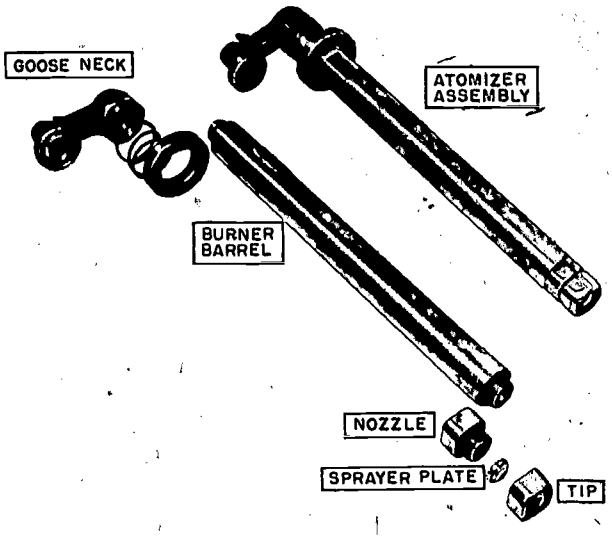

38.71

Figure 6-14.—Parts of a straight-through-flow atomizer assembly.

Figure 6-14 shows an atomizer of the straight-through-flow type. It consists of five major parts: the tip, sprayer plate, nozzle, burner barrel, and the gooseneck. The nozzle, sprayer plate, and tip assembly fit on the end of the burner barrel which projects into the furnace. The gooseneck fits on the outer end of the burner barrel. Fuel oil enters the atomizer assembly through the gooseneck and is sprayed into the furnace.

AIR REGISTERS

Air enters the furnace through the air register where it mixes with the fine oil spray which entered through the atomizer. Figure 6-15 shows the arrangement of air register parts in a burner assembly. The air register consists of three main parts: (1) air doors, (2) a diffuser, and (3) air foils. The air doors are used to open or close the register as necessary. They are usually kept either fully opened or fully closed. When the air doors are open, air rushes in and is given a whirling motion by the diffuser plate. The diffuser plate causes the air to mix evenly with the atomized oil in such a way that the flame will not blow away from the atomizer. The air foils guide the major quantity of air so that it mixes with the larger particles of oil spray beyond the diffuser.

Oil is forced under pressure through the burner barrel. It goes through the holes in the nozzle (fig. 6-16A) into the tangential grooves of the rear side of the sprayer plate (fig. 6-16B). These grooves are so shaped that the oil is given a high rotational velocity as it discharges into a small cylindrical whirling chamber in the center of the sprayer plate.

The whirling chamber is cone-shaped at the end and has as opening (orifice) at the small end of the cone. The oil leaves the chamber through the orifice and is broken up into very fine particles to form a cone-shaped fog-like spary. A strong blast of air, which has been given a whirling motion in its passage through the register, catches the oil fog and mixes with it. The mixture of air and oil enters the furnace where combustion takes place.

CLASSIFICATION OF BOILERS

Naval boilers may be classifed in a number of different ways, according to various design features. Some knowledge of these methods of classification will help you understand the design and construction of modern naval boilers.

LOCATION OF FIRE AND WATER SPACES

First of all, boilers are classified according to the relative location of their fire and water

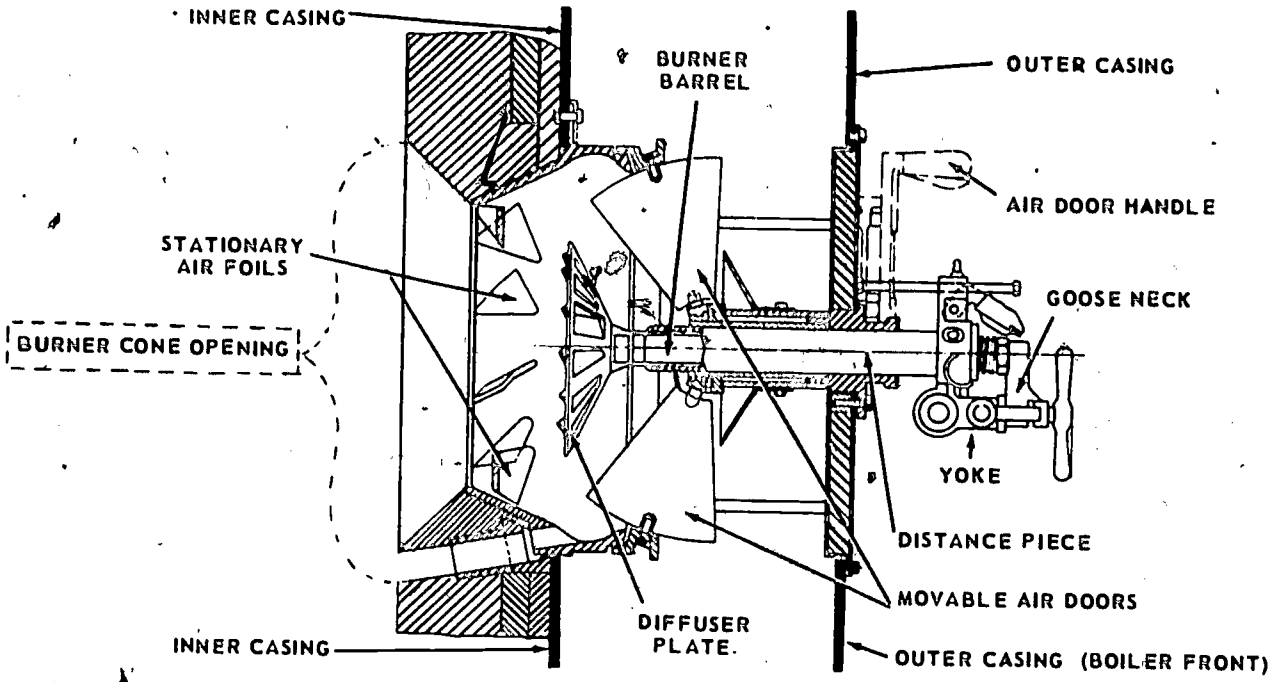

BURNER (SIDE VIEW)

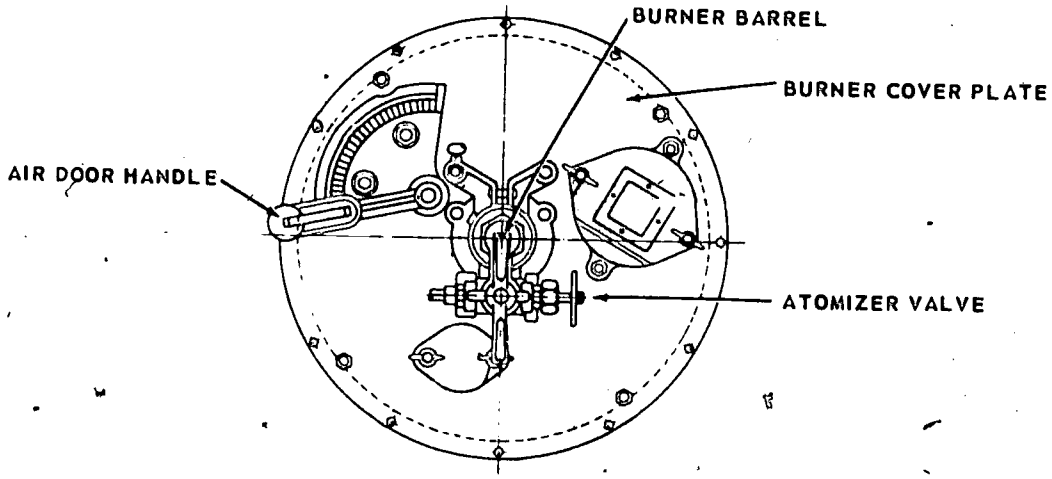

BURNER (FRONT VIEW)

38.69

Figure 6-15.—Cross-sectional view of Babcock and Wilcox Carolina-type fuel oil burner with straight-through-flow atomizer.

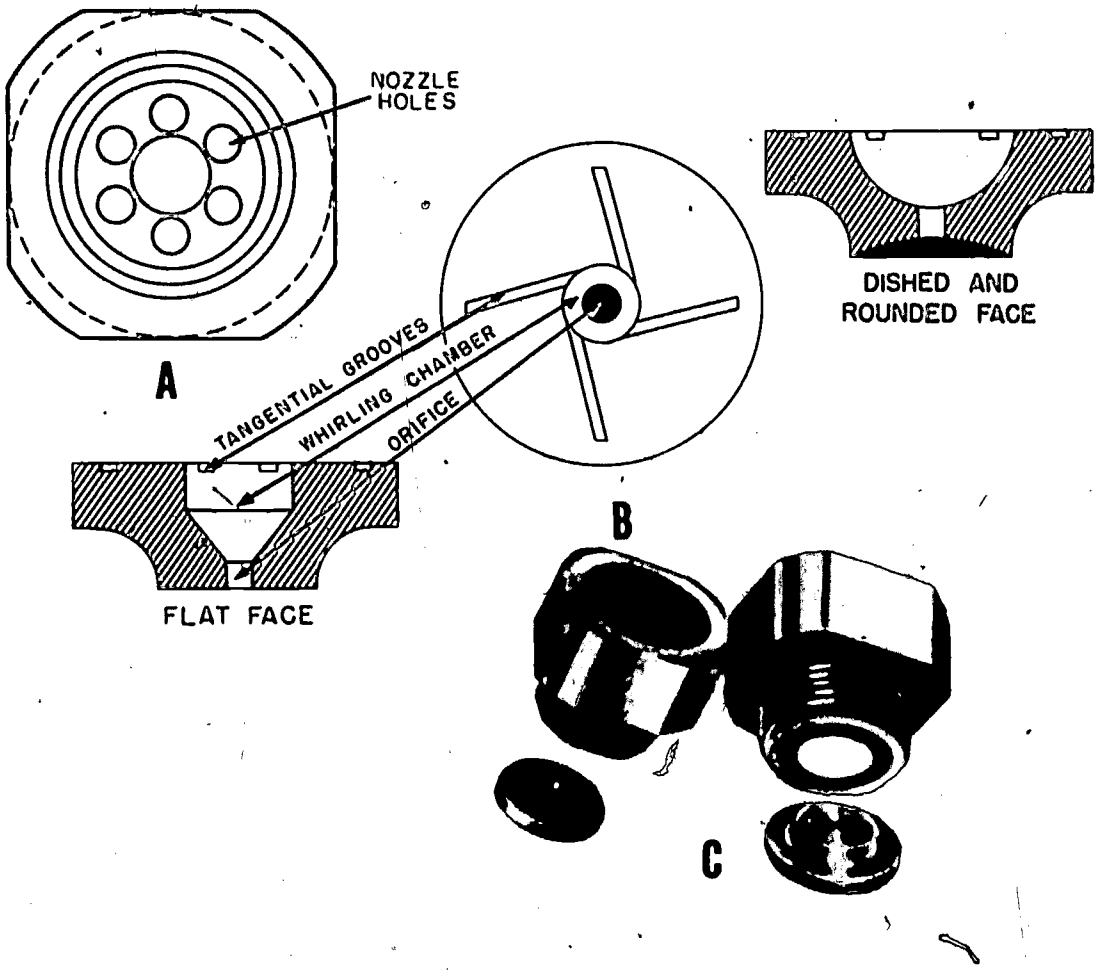

38.72X

Figure 6-16.—Nozzle and sprayer plate showing holes, groove and whirling chamber.

spaces. By this method of classification, all boilers may be divided into two groups: fire-tube boilers and water-tube boilers. In FIRE-TUBE BOILERS, the gases of combustion flow through the tubes and heat the surrounding water. In WATER-TUBE BOILERS, the water flows through the tubes and is heated by the gases of combustion that fill the furnace.

All boilers used in propulsion plants of naval ships are water-tube boilers. Fire-tube boilers, which were once used extensively in marine installations, are still used in propulsion plants of some older merchant ships. However, these boilers are not suitable for use on modern naval ships because of their excessive weight and size, the excessive length of time required to raise steam, and their inability to meet demands for rapid speed changes.

TYPES OF CIRCULATION

Water-tube boilers are also classified according to the type of circulation. Natural circulation boilers are those in which the

circulation of water depends on the difference in density between a rising mixture of hot water and steam, and a falling body of relatively cool, steam-free water. The difference in density occurs because the water expands as it is heated, thus becoming less dense. There are two types of natural circulation—free and accelerated.

In FREE CIRCULATION BOILERS, the tubes which connect the lower and upper drums or headers are only slightly inclined to allow the lighter hot water and steam to rise while the heavier and cooler water descends. Installing the generating tubes at a greater angle of inclination increases the rate of water circulation. Therefore, boilers in which the tubes slope more steeply between the water drums or headers and the steam drum are ACCELERATED CIRCULATION BOILERS.

Most modern naval boilers are designed for accelerated natural circulation. In such boilers, large tubes (3 inches or more in diameter) are installed between the steam drum and the water drums. We discussed these large tubes, the downcomers when we assembled the boiler earlier in this chapter. The downcomers are located outside the furnace (fig. 6-1) and away from the heat of combustion, thereby serving as pathways for the downward flow of relatively cool water. The small tubes, the generating tubes, then carry the steam and water upward.

TYPE OF SUPERHEATER

On practically all boilers currently used in the propulsion plants of naval ships, the superheater tubes are protected from radiant heat by water screen tubes. These tubes absorb the intense radiant heat of the furnace, and the superheater tubes are heated by convection currents rather than by direct radiation. Hence, the superheaters are referred to as CONVECTION-TYPE SUPERHEATERS.

On some older boilers, the superheater tubes were not screened by water screen tubes but were exposed directly to the radiant heat of the furnace. Superheaters of this type are called RADIANT-TYPE SUPERHEATERS. Although this type of superheater is uncommon at the present time, it may be used again in future boiler designs.

FURNACE ARRANGEMENT

All natural circulation boilers now in naval use may also be classified according to the furnace arrangement. By this classification, boilers are either SINGLE-FURNACE BOILERS or DOUBLE-FURNACE BOILERS. Double-furnace boilers are also referred to as DIVIDED-FURNACE BOILERS.

OTHER NAVAL BOILERS

There are many different kinds of boilers used in naval ships. Earlier in this chapter you studied and assembled the 600 psi D-type boiler. The other boiler used in naval ships is the 1200 psi boiler shown in figure 6-17. Notice that this boiler is very similar to the boiler shown in figure 6-1. However, the boiler in figure 6-17 has some special operating and design features which make it different from the one shown in figure 6-1. A relatively new boiler that is presently installed on some new construction of the DE 1040 class ship is the pressure fired boiler shown in figure 6-18. Since the pressure fired boiler is used for propulsion only, those ships that have a pressure fired boiler installed also have an auxiliary boiler.

Auxiliary boilers are not generally used on steam-driven ships because all steam for auxiliary service is taken from the propulsion-plant boilers. Auxiliary boilers are a wide variety of small boilers that are used in diesel-driven ships to supply steam or hot water for distilling plants, space heating, galley and laundry services. Auxiliary boilers contain their own accessories and controls and operate as a complete self-contained unit. The three basic types of auxiliary boilers in naval use are (1) fire-tube boilers (fig. 6-19), (2) water-tube boilers with natural circulation (fig. 6-20), and (3) water-tube boilers with forced circulation (fig. 6-21).

Generally, operating pressures of auxiliary boilers range from 50 psi to 125 psi. Most

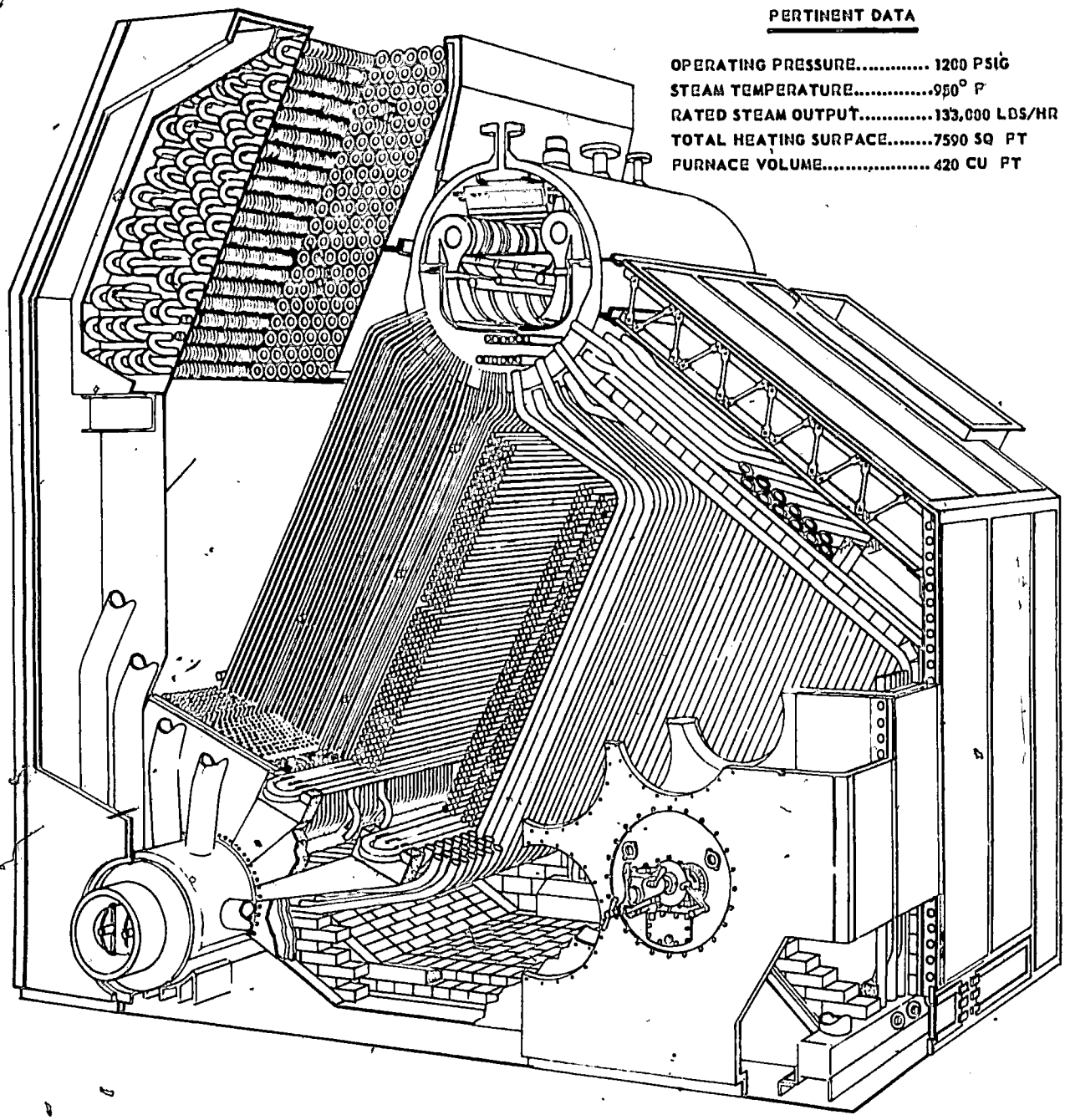

38.41

Figure 6-17.—1200 psi single-furnace boiler.

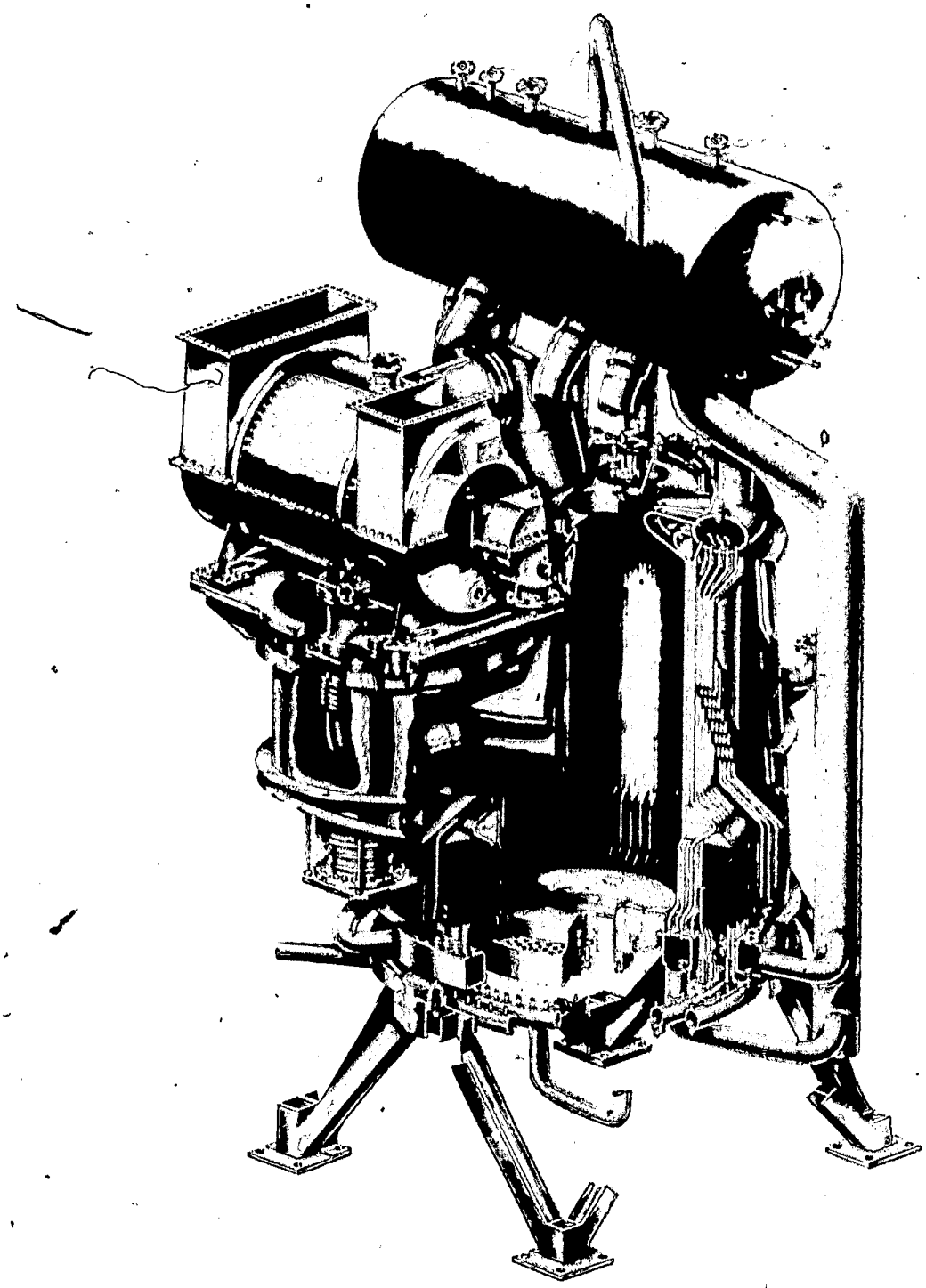

139.19

Figure 6-18.—Pressure fired boiler.

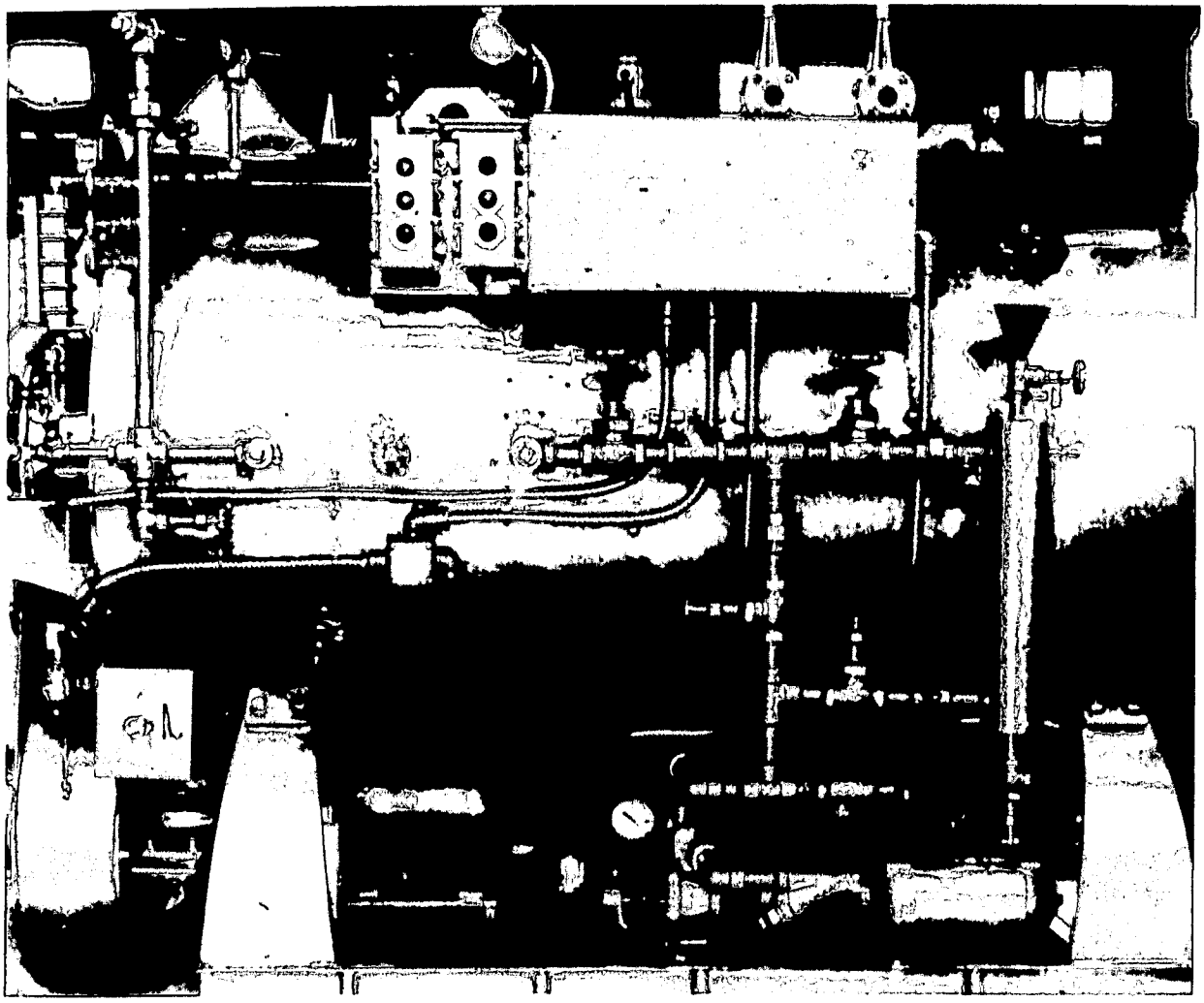

139.20

Figure 6-19.—Fire-tube auxiliary boiler.

operating and maintenance procedures for main propulsion boilers are also applicable to auxiliary boilers.

NEW HIGH-PRESSURE BOILERS

The modern trend in boiler design is toward higher pressures and temperatures. High pressure boilers are smaller, lighter, and more economical in fuel usage, in any given shaft horsepower, than boilers which operate at lower pressures and temperatures. Boilers operating at 4500 psi and above are now in use in some stationary steam power plants. For naval propulsion boilers, such pressures are not practicable at the present time. However, a number of boilers, operating at 1200 psi pressure and at 950° F, have been installed on new naval ships. Increasing use of these boilers will be made.

A HIGH-PRESSURE BOILER is any boiler that operates at 700 psi or above. The HIGH-PRESSURE, D-TYPE BOILER is a

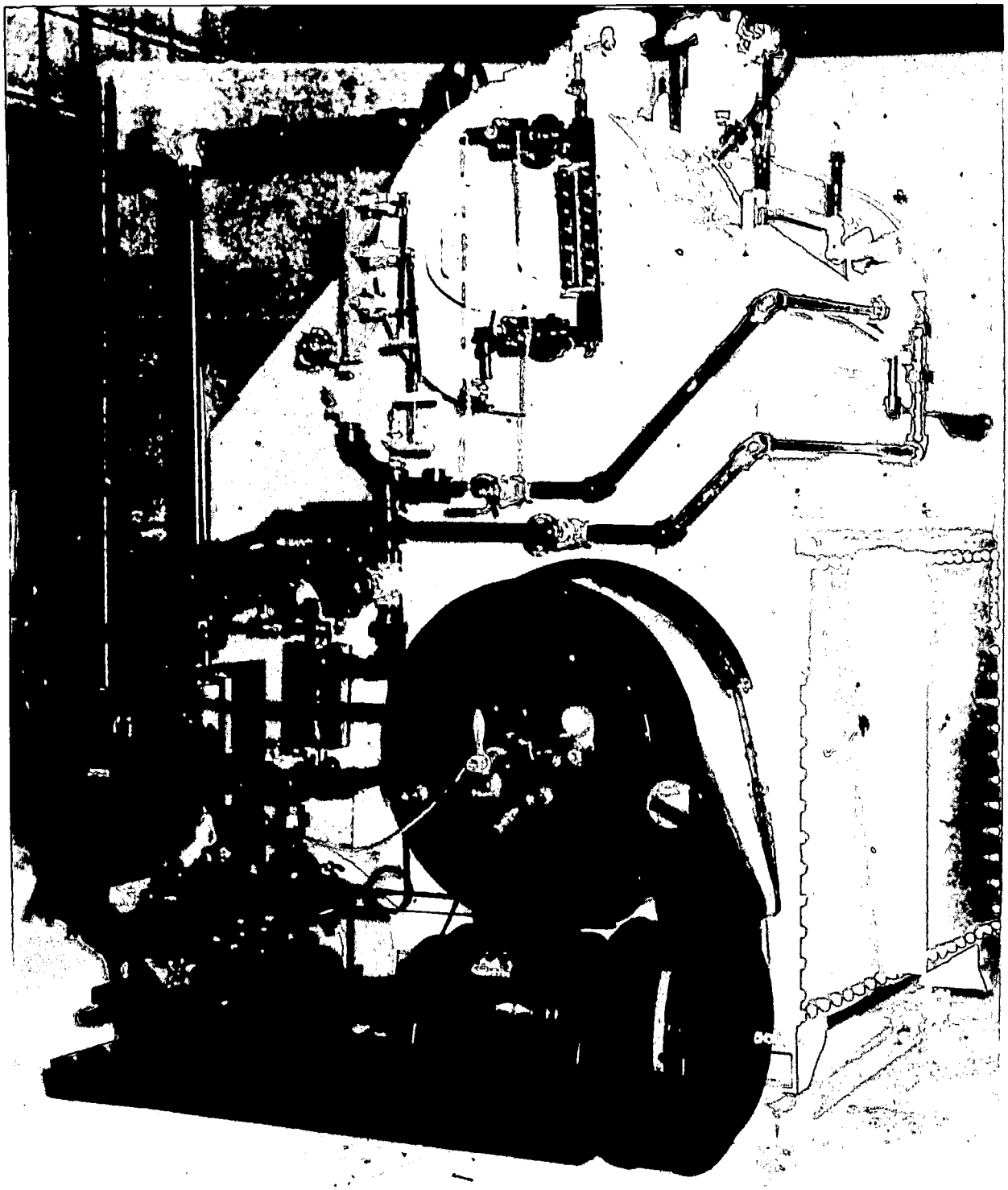

139.21

Figure 6-20.—Assembly view, water-tube auxiliary boiler (natural circulation).

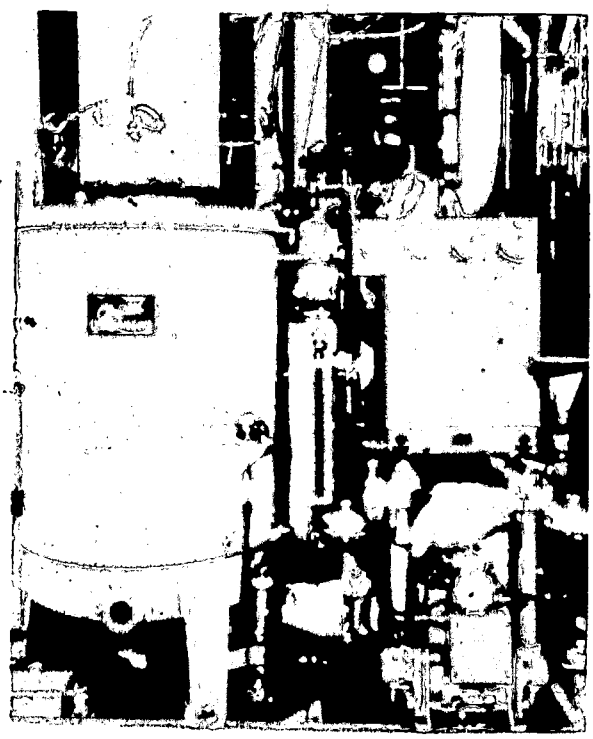

139.22

Figure 6-21.—Assembly view, water-tube auxiliary boiler (forced circulation).

natural circulation boiler that is the same as the D-type boiler, except that it has been modified for higher operating pressures.

FIREROOM SAFETY PRECAUTIONS

Safety precautions are for your protection as well as for the protection of machinery and equipment. When working in a steaming fireroom, you should be fully clothed. The valves, pipes and exposed metal in firerooms are always hot and will burn the flesh and leave a scar. Not only should you keep your shirt on, but you should also keep your shirt sleeves rolled down. Whenever you are assisting in lighting off or securing boilers, or just generally working in the fireroom, pay strict attention to posted safety precautions and to those precautions that your petty officers will tell you.

A few important safety precautions are listed here; your petty officers will instruct you in many more:

1. Do not open or close any valve you are not told to open or close.

2. Do not play games of any kind in the fireroom.

3. Do not leave tools lying around the fireroom; always return them to their proper stowage.

Observe the following precautions when lighting off a boiler:

1. Remove stack cover.

2. Run the water level down until it is below lighting off level and, then, add water with the emergency feed pump until it is at lighting off level.

3. Always purge the furnace before lighting off the first burner.

4. Stand well clear when inserting and withdrawing the torch.

Observe the following precautions during boiler operation:

1. Never leave disconnected atomizers in place.

2. Keep the atomizer root valves closed to secured burners, except during maneuvering.

3. Test the drain from the oil heater once each hour.

4. Blow through the gage glasses once each watch.

5. Poke through the burner drain holes once each watch.

6. Wipe up spilled oil at once.

Observe the following safety precautions when securing a boiler:

1. In shutting down a fireroom, do not close the master oil valve until the fuel oil pump is secured.

2. Remove atomizers from registers as soon as possible after securing.

3. Close all openings to the furnace as soon as all atomizers have been extinguished.

4. Pump the water level to three-fourths glass on cutting out a boiler.

CHAPTER 7

STEAM TURBINES AND REDUCTION GEARS

We have discussed the basic steam cycle and various turbine propulsion units. In this chapter we shall discuss the components insde the casing of the turbines and reduction gears so that you will have a basic understanding of how the stored energy (heat) in steam is transformed into the mechanical energy (work) of rotation.

TURBINES

The development of steam power was built around the reciprocating engine; however, the earliest steam engine operated on the TURBINE prniciple. Almost 2,000 years ago Hero, a Greek mathematician built a small steam turbine and demonstrated that steam power could be used to operate other machinery (fig. 7-1). Hero's turbine consisted of a hollow sphere which carried four bent nozzles. The sphere rotated freely on two tubes that carried steam from the boiler. Steam generated in the boiler passed upward through the tubes and into the sphere and out through the nozzles. As the steam left the nozzles, the sphere rotated rapidly.

Down through the ages the turbine principle has been applied to many different types of machines. The water wheel that was used to operate the flour mills in colonial times, the common windmill used to pump water, and the two-bladed windmill used to charge batteries are all examples of the turbine principle. In these examples the power is derived from the effect of the wind or a stream of water on a set of blades attached to a wheel. In the steam turbine, steam under pressure serves the same purpose as the wind or the flowing water in the other types.

CLASSIFICATION OF TURBINES

Turbines may be classified in four ways:

1. By the manner in which the steam causes the turbine rotor to rotate.
2. By the type of staging and compounding of steam pressure and velocity.
3. By the division of the steam flow.
4. By the direction of the steam flow.

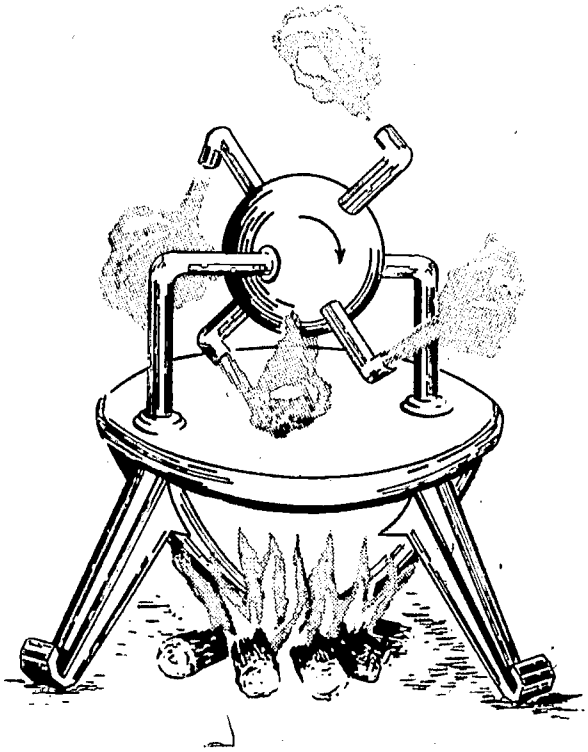

139.23

Figure 7-1.—Hero's steam Turbine.

Under each of these classifications, there are several types of turbines, some of which are described briefly in the following paragraphs.

Impulse Turbines

The energy to rotate an impulse turbine is derived from the kinetic energy of a steam jet or some other rapidly moving fluid. The term "impulse" means that the force which turns the turbine comes from the impact of the rapidly moving fluid. The toy pinwheel (figl 7-2) can be used to study some of the basic principles of turbines. When you blow on the rim of the wheel, it spins rapidly. The harder you blow, the faster it turns. The steam turbine operates on the same principle, except that instead of the air you were blowing, it uses the high pressure steam from the ship's boiler.

The impulse turbine consists essentially of a rotor or spindle mounted on a shaft that is free to rotate in a set of bearings. The outer rim of the spindle carries a set of curved blades, and the whole assembly is enclosed in an airtight case. Several nozzles direct the steam against the blades and turn the spindle (fig. 7-3).

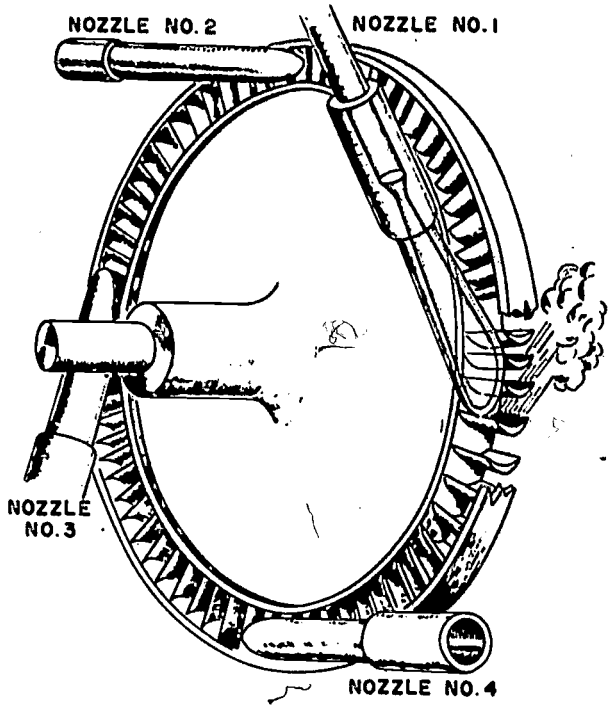

33.46

Figure 7-3.—A simple impulse turbine.

STEAM NOZZLES (hereafter referred to as nozzles or stationary blades) are connected to the line that carries high pressure steam from the boiler. As the steam passes through each nozzle, its pressure is reduced, but its velocity is greatly increased. The potential energy of the steam under pressure is converted to kinetic energy in the high-speed jets emerging from the nozzles. These jets are directed against the turbine blades and turn the spindle. In other words, the velocity of the steam is reduced in passing over the blades, and some of its kinetic energy is transferred to the blades as a force to turn the spindle. The modern impulse turbine operates on the same general principle as the model just described, but it has many refinements.

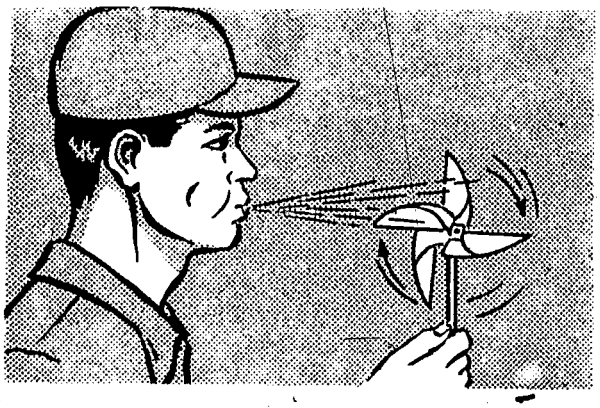

139.24

Figure 7-2. The toy pinwheel operates on the impulse turbine principle.

COMPOUND TURBINES have several rows of revolving blades with stationary nozzles or blades mounted between each row. As the steam passes through the first stage, it moves faster in the nozzles and slows down while going through the moving blades. The second set of nozzles speeds the steam up again, making additional kinetic energy available for the second row of moving blades. This sequence continues through all of the successive stages until the pressure is

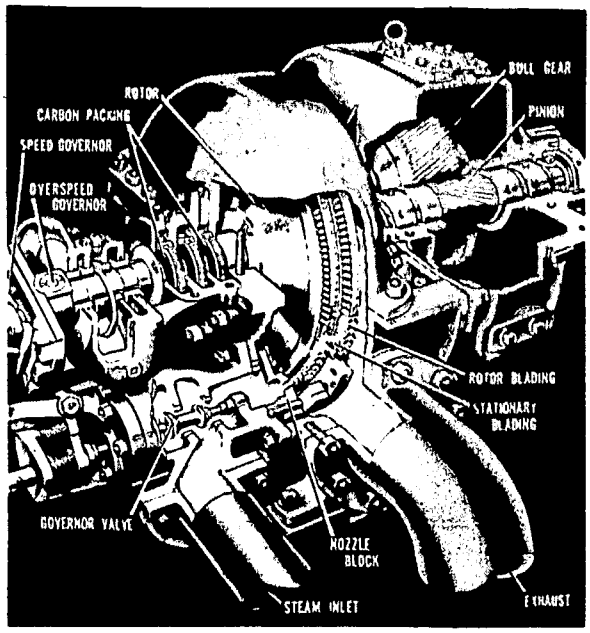

139.25

Figure 7-4.—A velocity compounded impulse turbine with a reduction gear.

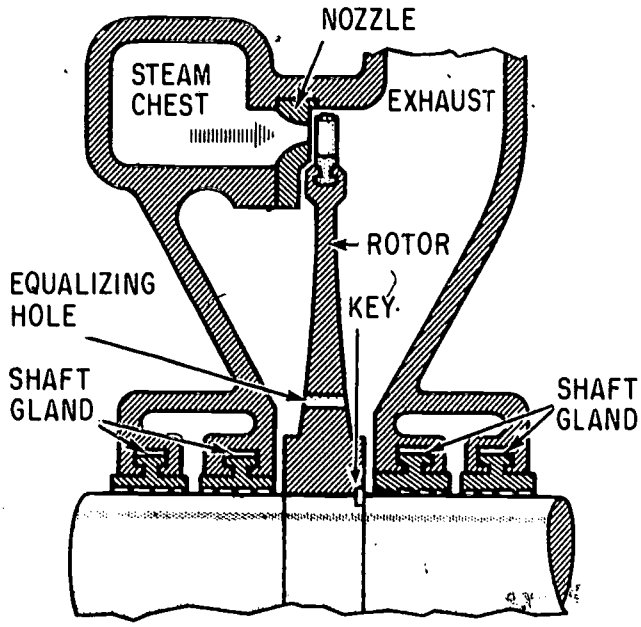

38.78X

Figure 7-5.—Impulse turbine.

reduced to the point that it would not be feasible to take any more energy from it.

The velocity compound impulse turbine shown in figure 7-4 has two rows of moving blades. Steam enters through the inlet, flows through the governor valve, and passes through the stationary nozzles. The steam undergoes a large pressure drop and a large velocity increase out of the nozzles. The steam then enters the first row of moving (rotor) blades, attached to the rotor where there is a decrease in velocity. It then flows through the stationary blades or guide blades. There is neither a pressure drop nor a velocity increase while the steam goes through the stationary blades. The stationary blades, attached to the turbine casing, merely provide a place for the steam to reverse its flow before it enters the next row of moving blades. The steam then enters the second row of moving blades where there is also a decrease in velocity. The velocity is so reduced that by the time the steam reaches the exhaust, most of the energy has been used to turn the spindle.

The shaft of the spindle revolves in bearings supported by the turbine casing. Carbon packing rings keep the steam from escaping through the shaft bearing. We shall discuss the reduction gear shown on the turbine in figure 7-4 later in the chapter. It consists of a pinion gear (attached to the spindle shaft) and a much larger bull gear. Because of its larger diameter, the bull gear rotates much more slowly than the high-speed turbine.

Impulse turbines are used in the Navy to drive the forced draft blowers and most of the feed water and fuel pumps. They have few moving parts, are lightweight, do not take up much space, and run with very little vibration.

In an impulse turbine, a STAGE is defined as one set of nozzles and the succeeding row or rows of moving and fixed blades. Another way to define a stage is that is includes the nozzles and blading in which only one pressure drop takes place. (In an impulse turbine, remember, the only pressure drop takes place in the nozzles. Therefore, the number of sets of nozzles in an impulse turbine indicates the number of stages.)

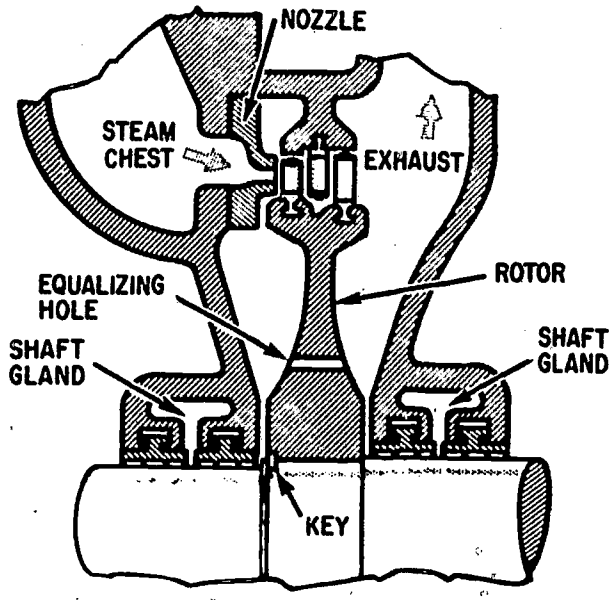

38.79X

Figure 7-6.—Velocity-compounded impulse turbine.

Figure 7-5 shows a SIMPLE IMPULSE TURBINE. This turbine has one stage, consisting of one set of nozzles and one row of moving blades mounted on the rotor. Simple impulse turbines do not completely utilize the velocity of the steam, and are therefore not very efficient.

One way to increase the efficiency of a single-stage impulse turbine is to add another row (or even two more rows) of moving blades to the rotor wheel. Figure 7-6 shows a turbine which has two rows of moving blades. This type turbine is a VELOCITY-COMPOUNDED IMPULSE TURBINE because the lowered velocity of the steam leaving the first row of moving blades is used in the second row of moving blades; and, if a third row is added, the additionally lowered velocity of the steam is used again in the third row. The fixed blades, which are fastened to the casing rather than to the rotor, serve only to direct the steam from one row of moving blades to another.

Another way to increase the efficiency of an impulse turbine is to arrange two or more simple impulse stages in one casing. The casing is internally divided by diaphragms which contain nozzles so that the residual steam pressure of one stage is utilized in the following stage. This type of turbine is known as a PRESSURE-COMPOUNDED IMPULSE TURBINE because a pressure drop occurs in each stage, as the steam expands through each set of nozzles. Figure 7-7 shows a pressure-compounded impulse turbine with four stages.

Reaction Turbines

The ancient turbine built by Hero operated on the reaction principle. Hero's turbine was invented long before Newton's time, but it was a working model of Newton's third law of motion which states: FOR EVERY ACTION THERE MUST BE AN EQUAL AND OPPOSITE REACTION. On first thought, you may find it difficult to accept this statement on its face value. However, let us look at some more understandable samples of Newton's theory.

If you set an electric fan on a roller skate, it will take off across the table (fig. 7-8). The fan pushes the sir forward and sets up a breeze (velocity); the air is also pushing backward on the fan with an equal force, but in an opposite direction. You enjoy the breeze that is blowing

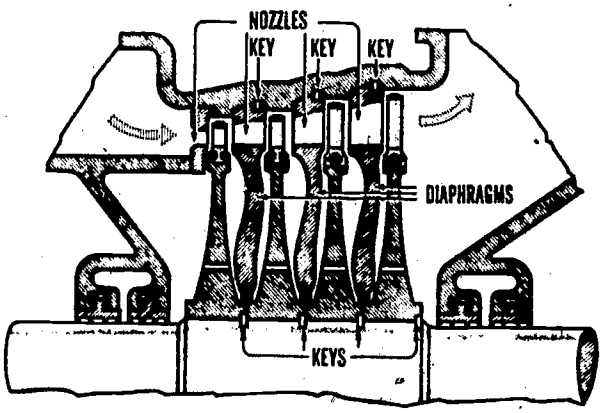

38.80X

Figure 7-7.—Pressure-compounded impulse turbine.

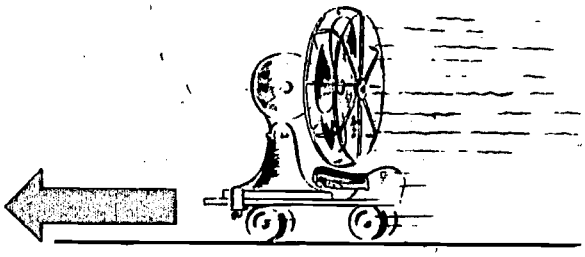

139.26

Figure 7-8.—The reaction of the air on the blades rolls the electric fan across the table.

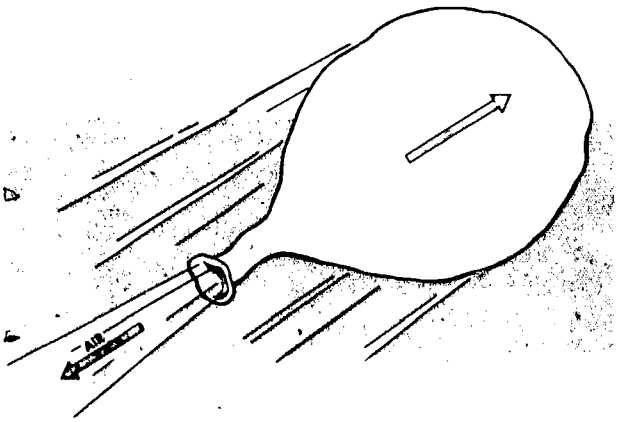

139.27

Figure 7-9.—A toy balloon demonstrates the "kickback" or reaction principle.

from the front of the fan, but the breeze produces an opposite force on the back side of the blades to move the fan backward.

When you try to push a car, you may not know it but, you are pushing back with your feet as hard as you are pushing forward with your hands. Try it sometime when you are standing on an icy road. You will not be able to move the car unless you can dig in with your feet to exert the backward force. With a little thought on your part you should be able to come up with enough examples to prove to yourself that Newton's third law of motion holds true under all circumstances.

The reaction turbine uses the reaction of a steam jet to drive the spindle. You have learned that in an impulse turbine the nozzles increase the velocity of the steam and transform the potential energy of the steam under pressure into kinetic energy in the steam jet. A forward force must be applied to the steam to increase its velocity as it passes through the nozzle. From Newton's third law of motion you have seen that the steam jet exerts a force on the nozzle and an equal reactive force on the turbine blades in the opposite direction; this is the force that drives the turbine.

In the reaction turbine, stationary blades attached to the turbine casing act as nozzles and direct the steam to the moving blades. The moving blades are mounted on the rotor. Most reaction turbines have several stages, with alternate rows of stationary and moving nozzle blades.

The "kickback" or reaction force generated by the nozzle blades can be demonstrated by a toy balloon. Blow up the balloon and toss it into the air. The air will rush out through the opening and the balloon will shoot off in the opposite direction (fig. 7-9).

When you fill the balloon with air, you have potential energy in the increased air pressure inside. When you let the air escape it is speeded up (velocity) as it passes out through the small opening; this represents a transformation from potential to kinetic energy. The force applied to the air to speed it up is accompanied by a reaction in the opposite direction. This reactive force propels the balloon forward through the air.

You probably think that the force that makes the balloon move forward comes from the jet of air blowing against the air in the room, but this is not so. It is the reaction of the force it takes to increase the velocity (speed) of the air as it passes out through the opening. The balloon would travel even faster if it were in a vacuum. Try it the next time you are near a balloon.

The reaction turbine (fig. 7-10) has all the advantages of the impulse type turbine, plus a slower operating speed and greater efficiency.

The several stages through which the steam passes gradually reduce the steam pressure until practically off of the energy has been converted to power. When a reaction turbine is operated in conjunction with a condenser, the exhaust pressure of the turbine is only a small fraction of the normal atmospheric pressure. The steam gradually expands as it passes through the successive stages. Therefore, the length of the blades is increased in each succeeding stage to take care of the additional volume of steam caused by this expansion.

Briefly, let us compare the impulse turbine and the reaction turbine. In the impulse turbine you learned that the steam pressure drops ONLY in the nozzles.

In the reaction turbine, the steam pressure drops successively in each row of blades, whether fixed or moving. The combination of a row of fixed blades and a row of moving blades in these turbines is sometimes referred to as a DOUBLE STAGE (also known as a single REACTION STAGE).

All reaction turbines are pressure compounded. The PRESSURE-COMPOUNDED REACTION TURBINE has alternate rows, or stages, of fixed and moving blades which compound the total pressure drop into as many steps as there are rows of fixed and moving blades. This pressure staging lowers the steam velocity in each stage.

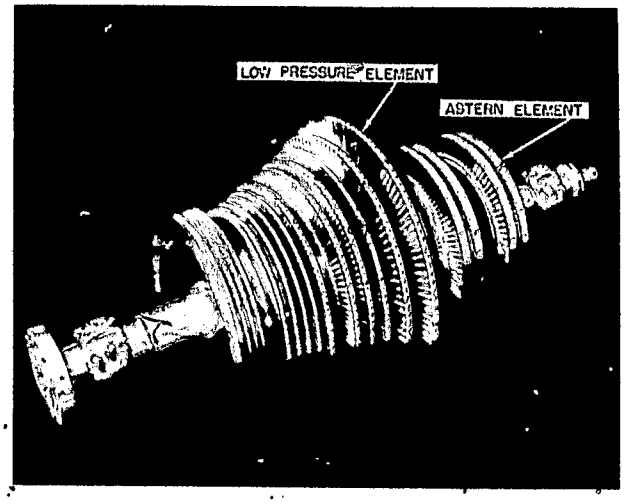

139.28X

Figure 7-10.—A low pressure reaction turbine with the upper half of the case removed.

CONSTRUCTION OF TURBINES

Other than the controls, similar turbine parts are found in both the impulse and the reaction turbines, such as foundations, casings, nozzles (or stationary blades), rotors, movable blades, bearings, shaft glands, and gland seals.

Foundations

Turbine foundations are built up from a structural foundation in the hull to provide a rigid supporting base. All turbines are subjected to varying degrees of temperature—from that existing during a secured condition to that existing during full-power operation. Therefore, some means must be provided to allow for expansion and contraction.

Normally, the after end of the turbine is firmly secured by bolts to the structural foundation. The bolts have shanks which are fitted to the exact size of the holes in which they are placed. The tight fit thus prevents motion of any kind.

At the forward end of the turbine, there are two ways to give freedom of movement. Either elongated boltholes or grooved sliding seats are used so the forward end of the turbine can move fore and aft, as either expansion or contraction, respectively, takes place.

Casings

Turbine casings are generally constructed of cast carbon steel. However, for turbines that use superheated steam with temperatures of more than 650°F, the casings are generally cast or fabricated from carbon molybdenum steel or chromium molybdenum steel. Each casing has a steam chest to receive the incoming high pressure steam which it delivers to the first set of nozzles or blades.

Nozzles

The primary function of the nozzles is to convert the thermal energy of steam into kinetic energy. The secondary function of the nozzles is to direct the steam against the blades. In most modern turbines the nozzles are made up into groups or blocks with each group being controlled by a separate nozzle control valve. The amount of steam delivered to each stage thus becomes the function of each of the nozzles and nozzle control valves in each group or block. A diagrammatic arrangement of a nozzle group is shown in figure 7-11.

Rotors

Rotors (forged wheels and shaft) are made of carbon steel when used with steam of relatively low temperatures. However, when the temperature of the steam will be greater than 650° F, the rotors are made of carbon molybdenum of some other creep-resistant alloy. In all types of turbines, the primary purpose of the rotor is to carry the moving blades which receive the energy from the steam to turn the turbine shaft. A rotor without the blades is shown in figure 7-12.

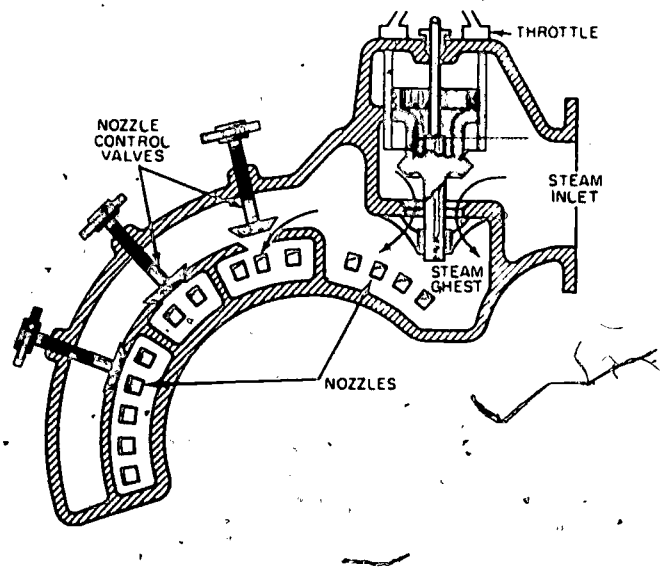

47.13X

Figure 7-11.—Diagram of a nozzle group.

Movable Blades

The blades are secured to the turbine casings and rotors by various methods. Some of the methods of securing turbine blading are illustrated in figure 7-13, parts A through D. The straight circumferential dovetail (part A) is primarily used to secure rotor blades. The inverted circumferential dovetail (part B) is used to secure blading in most impulse turbines. The side-locking key piece method (part C), which is used only on casing blades, consists of driving a locking key piece between the blade root and a groove in the casing. The sawtooth serration method (part D) is used for both rotor and casing blades.

Bearings

The rotor of every turbine must be supported in bearings, which serve a double purpose. The bearings (1) carry the weight of the rotor and (2) maintain the correct radial clearance between rotor and casing. All main turbines, and most auxiliary units, have a bearing at each end of the rotor.

Bearings are generally classified as sliding surface (sleeve and thrust) or as rolling contact (antifriction).

All propulsion and most auxiliary turbine installations are equipped with sleeve bearings, which are of two types: cylindrical and

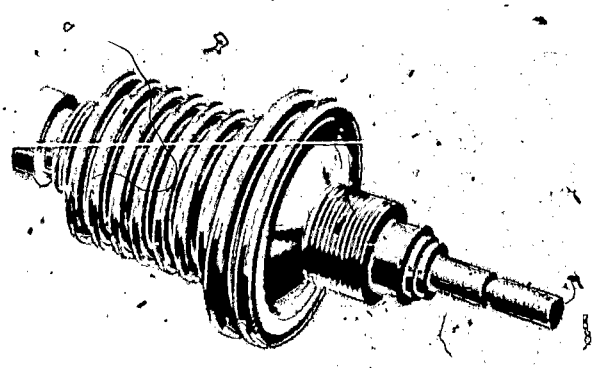

47.15X

Figure 7-12.—Turbine motor (without blades.

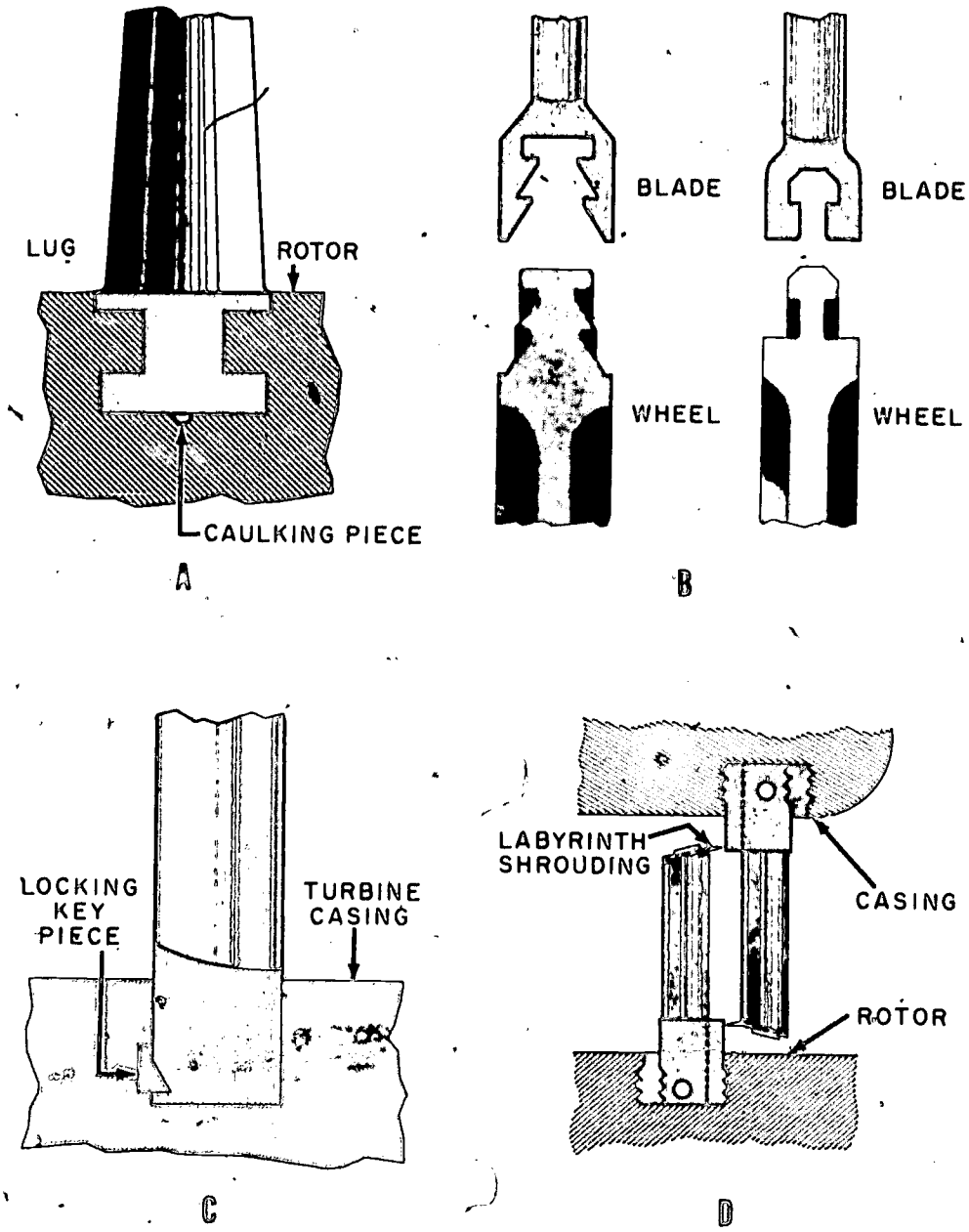

47.16X

Figure 7-13.—Methods of securing blading.

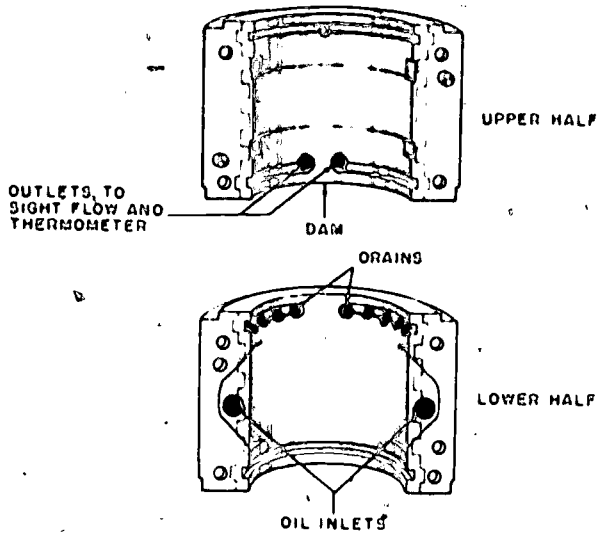

98.3X

Figure 7-14.—A typical propulsion turbine journal bearing.

spherical-seated. A typical cylindrical journal bearing is shown in figure 7-14.

THRUST BEARINGS take care of any axial thrust, which may exist in a turbine rotor, and also hold the turbine rotor within certain definite axial clearances. Thrust bearings are installed on all main turbines on one end of the turbine, usually just forward of the forward turbine bearing. A thrust bearing is also installed on the propeller shaft either at the forward end of the main reduction bull gear or in the propeller line shafting abaft (behind) the gear, to take the thrust of the propeller. Except that the propeller thrust bearing is much larger, the design of turbine thrust bearings and propeller thrust bearings is much the same. Some thrust bearings are lubricated by the same lubricating oil system which supplies oil to the turbine bearings and reduction gears. Some ships have separate thrust bearings aft of the reduction gear; this arrangement has its own lube oil system. An assembled thrust bearing element is shown in figure 7-15.

Rolling contact (antifriction) bearings include ball and roller bearings which are used on some small auxiliary units.

Shaft Glands

Shaft glands are used to prevent leaking of steam from the turbine casing at the points where the shaft extends through the casing. The shaft glands on auxiliary turbines have a gland housing which may be either a part of the turbine casing or a separate housing bolted to the casing. Two types of packing are

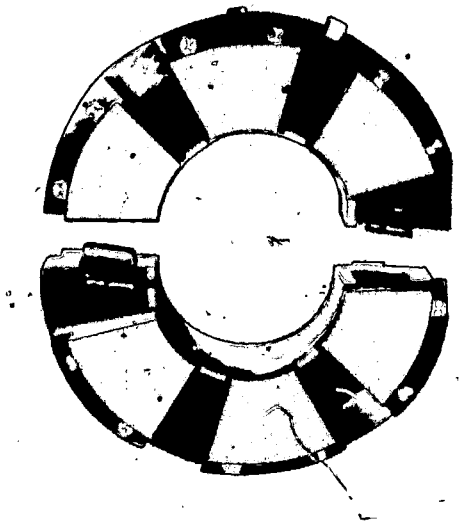

139.29X

Figure 7-15.—Assembled thrust bearing element.

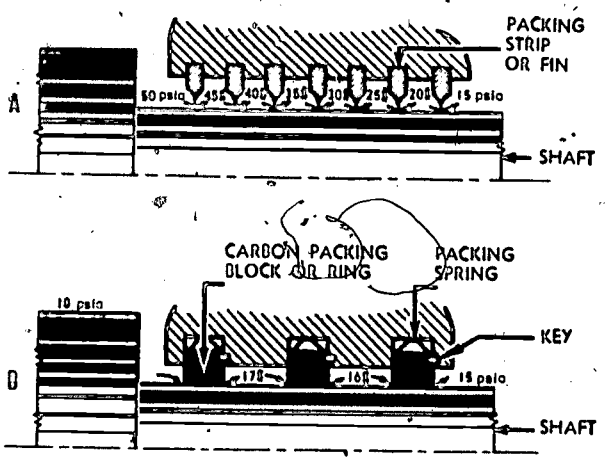

47.17X

Figure 7-16.—Turbine motor shaft glands: A. Labyrinth packing gland; B. Carbon packing gland.

used—labyrinth packing and carbon packing, which may be used either separately or in combination.

Labyrinth packing, shown in figure 7-16A, consists of rows of metallic strips or fins. The strips are so fastened to the gland liner that there is a very small space between the strips and the shaft. As the steam from the turbine casing leaks through the small space between the packing strips and the shaft, steam pressure is gradually reduced.

Carbon packing rings, shown in figure 7-16B, restrict the passage of steam along the shaft in much the same manner as do the labyrinth packing strips. Carbon packing rings are mounted around the shaft and held in place by springs. Three or four carbon rings are generally used in each gland. Each ring is fitted into a separate compartment of the gland housing, and each ring consists of two, three, or four segments which are butt-jointed to each other. These segments are held together by a garter spring. Keepers (lugs or stop pins) are used to prevent rotation of the carbon rings when the shaft rotates. The outer carbon ring compartment is connected to a drain line.

Carbon packing is suitable only for relatively low pressures and temperatures. Therefore, when both types of packing are used in one gland, the labyrinth packing is used at the initial high-pressure area and the carbon packing is used at the low pressure area.

Gland Sealing System

Steam is passed into the glands to seal the glands of the turbines and to prevent air from being drawn into the condenser. The low-pressure turbine, which operates at all times with a vacuum in its casing, must have steam admitted at all times to the glands from some external source. This steam is led from the auxiliary exhaust line to pass through a cutout valve, then through a weight-loaded pressure regulating valve to the turbine glands. The weight-loaded pressure regulating valve operates at all times to maintain a pressure of 1/2 to 2 psi

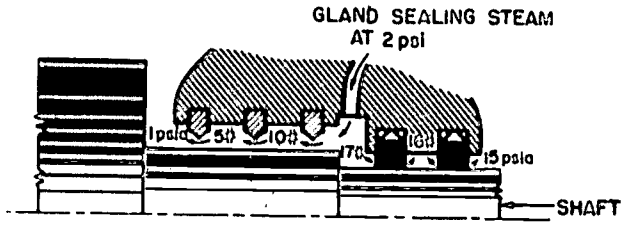

47.18X

Figure 7-17.—A turbine steam reading gland.

(15 to 17 pounds absolute) to the turbine sealing glands (fig. 7-17). In high-pressure and cruising turbines at higher speeds, the pressure on the turbine end of the forward glands will be so great that steam will bleed out through these glands, automatically sealing them. Since these glands may at times seal themselves, it is necessary to have a separate system for the cruising and the high-pressure turbines.

REDUCTION GEARS

In Chapter 4 we discussed the main propulsion locked-train type, double-reduction garing used in the DD-692 class destroyer. Now, let us consider the main propulsion, double-reduction gearing.

MAIN PROPULSION, DOUBLE-REDUCTION GEARING

There are two other types of main propulsion, double-reduction gearing in use—the articulated gearing and the nested gearing.

Articulated Gearing

The ARTICULATED GEARING, shown in figure 7-18, has more bearings and occupies more longitudinal space in a ship than the nested or locked-train type reduction gearing, shown in figure 7-19. This type is seldom used in the Navy; it is not used on combatant ships.

Nested Gearing

The nested gearing (fig. 7-19) is the simplest of all double-reduction gears. It uses a minimum

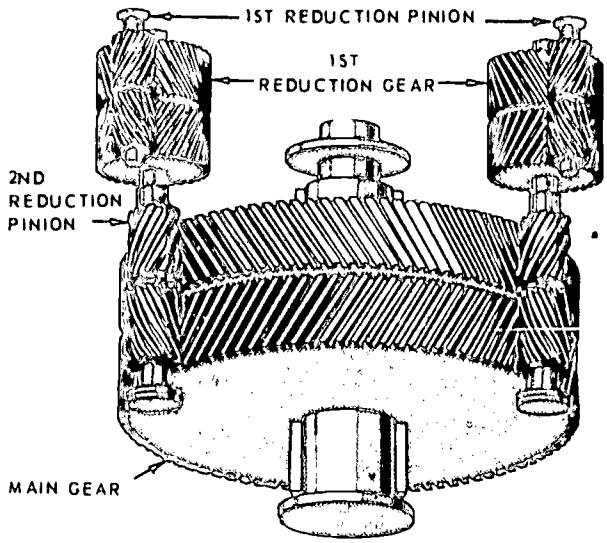

47.28

Figure 7-18.—Articulated type of double gearing.

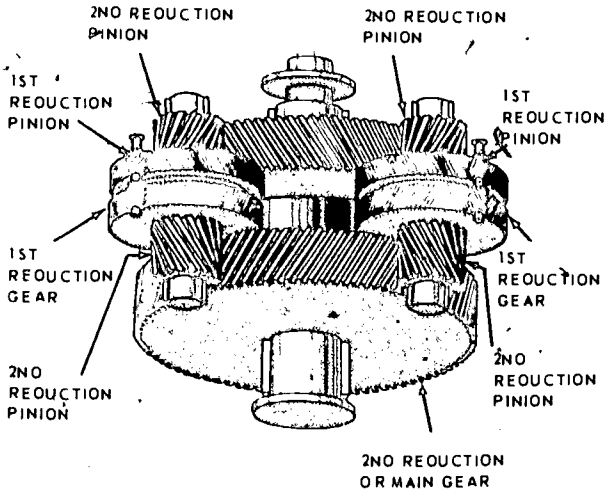

47.29

Figure 7-19.—Nested type of double reduction gearing.

number of bearings and flexible couplings. The nested gearing type is used on most auxiliary ships; it is NOT used on combatant ships.

The gearing used in shipboard pumps and auxiliary machinery is not as complicated as the

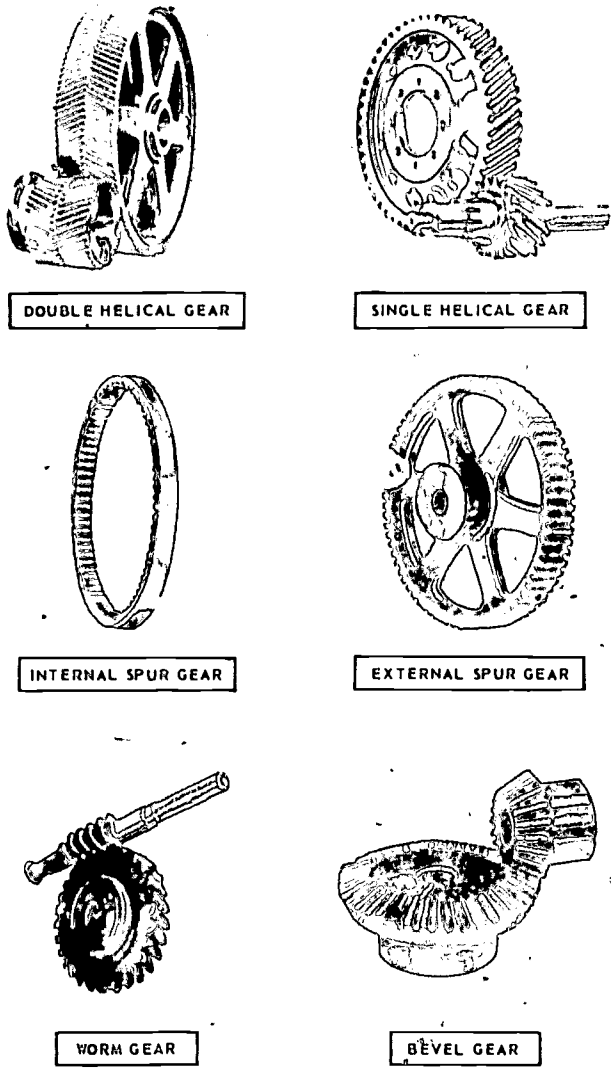

5.22

Figure 7-20.—Types of gears found in shipboard machinery.

reduction gearing used for main propulsion. Figure 7-20 illustrates common forms of gears used in shipboard machinery. Probably one of the simplest types of reduction gearing is the worm gear shown in figure 7-20.

Worm Gear

Worm gears are used to transmit motion between shafts which are at right angles to each other. The worm gear consists of a cylinder with one or more threads (sing, double, triple) cut on

the outside like a screw. The worm wheel is a gear with teeth cut on the outside rim to mesh with the threads on the worm.

The worm gearing speeds reduction. A complete turn of the worm turns the wheel ahead the distance of one tooth on the wheel. A double thread worm will revolve the gear twice as fast as a single thread worm.

REDUCTION GEAR CONSTRUCTION

The gears in a main reduction gear unit, such as the main gears and the pinion gears, must be capable of transmitting tremendous power loads. The pinion gear is the smaller of two meshing gears and is used mainly for decreasing speed and increasing power. Since even a very slight unevenness of tooth contour and spacing will cause the gears to operate noisily, or even fail, special precautions are taken to manufacture the gears to exact dimensions. The gears are cut in a room maintained at constant temperature and humidity to eliminate expansion, contraction, and oxidation of the metal.

Almost all pinion gears in main reduction gearing are machined completely of specially heat-treated, nickel-steel forgings. Generally, the gear wheels are of built-up construction with the teeth cut in forged steel bands which are welded to steel webs. The first reduction gears are generally welded on their respective shafts. The bull gear is usually pressed on the shaft against a locating shaft shoulder and is secured by one or more keys and a locking nut mechanism (fig. 7-21).

Gear casings can be divided into three major parts:

1) The lower part (base section) supports the bull gear, main thrust bearing, and the high-speed parts of the reduction gear. The lower section also serves as the sump or storage tank for the lubricating oil in the system.

2) The intermediate section of the casing supports the bearing housing for the intermediate speed pinions and gears as well as the high speed pinions.

3) The upper part of the gear casing is the main cover which is divided into two sections with inspection ports so located that the teeth of any pinion or gear can be examined without removing the main cover sections. The inspection ports are covered with easily opened hinged covers.

Reduction gearing for pumps and other auxiliary machinery is constructed slightly differently than the main reduction gearing just discussed. In the ship's service generator, the pinion is forged together with the shaft as one whole part. One end of the pinion shaft is flanged and bolted rigidly to the turbine shaft. The gear wheel is pressed and keyed onto the shaft.

In main circulating pumps the pinion is a solid forging, while the gear is constructed by welding a forged hub and a forged rim together. The gear hub is bolted to a plate which is keyed to the gear shaft.

The reduction gear of a turbine-driven condensate pump, shown in figure 7-22, which is a worm shaft and a worm wheel, reduces the turbine speed of approximately 5500 rpm to pump speed of approximately 1100 rpm. The worm is cut in a solid, low-carbon, nickel-steel forging. The worm wheel is a solid nickel-bronze casting which is pressed onto a forged steel shaft. The gear casing is of cast steel to form rigid support for the rotating elements. It is split horizontally for easy assembly or disassembly.

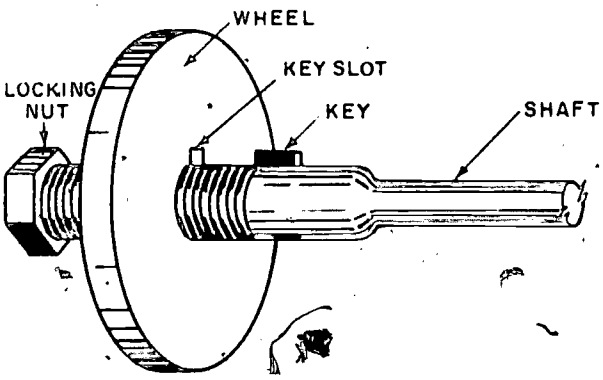

139.30

Figure 7-21.—Key and locking nut.

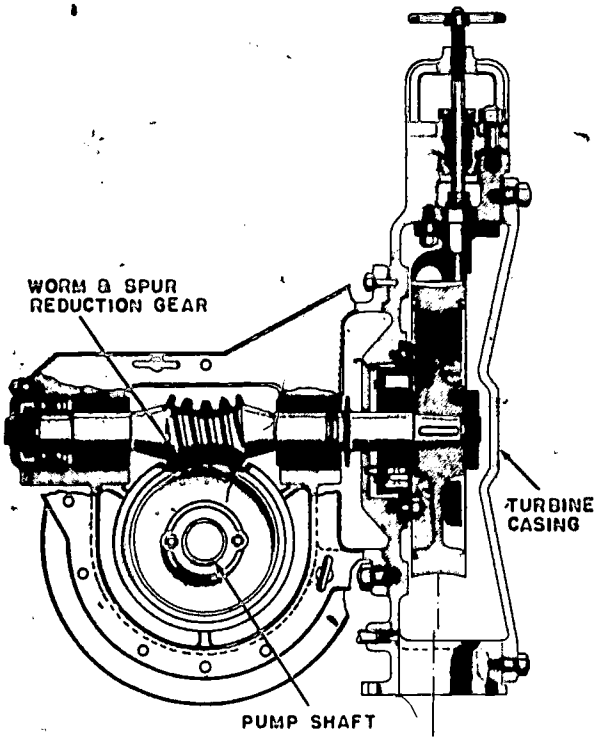

47.38

Figure 7-22.—Main condensate pump reduction bearing.

LUBRICATION

All moving surfaces must receive a steady and adequate supply of oil of proper quality at the correct temperature. Impurities and foreign matter must be removed from the lubrication system and a reserve supply of good clean oil must be maintained.

To understand the principles of lubrication, you should know the purposes of a lubricant. Lubricants reduce friction between moving parts. Friction is the resistance to motion between the two bodies in contact. When this frictional resistance is overcome, and motion takes place, heat is generated. There are three kinds of friction:

1. SLIDING FRICTION—between two solid objects whose outer surfaces slide over each other.

2. ROLLING FRICTION—between two solid objects, one (or both) of which is rolling on the other.

3. FLUID FRICTION—between the molecules or particles of a fluid, or between two films of fluid.

Since liquid lubricants can be readily circulated, they are used universally for internal lubrication. Lubricating oils are mineral oils obtained from petroleum. In theory, fluid lubrication is based on the actual separation of the surfaces so that no metal-to-metal contact occurs. As long as an oil film remains unbroken, sliding or rolling friction is replaced by the fluid friction (internal friction) of the lubricant itself. Under such ideal conditions, friction and wear are held to a minimum.

Purpose of Lubrication

The primary purpose of lubricating oil and grease is to SUBSTITUTE FLUID FRICTION FOR EITHER SLIDING OR ROLLING FRICTION. This means that a lubricant of sufficient quantity and consistency must be provided to keep the moving metal parts (of bearing, lining, and journal, for example) from contacting each other. The remaining fluid friction, within the lubricant itself, is far less than that which would otherwise occur between the solid objects, but it also generates heat which must be removed.

The secondary (but highly important) purpose of a lubricant is that of ABSORBING AND REMOVING THE HEAT which is generated by the fluid friction as well as the heat which, in steam turbines, is conducted along the shafting from the steam-heated rotors. Removal of this heat by the lube oil prevents serious damage to the machinery parts and makes it necessary to have the oil repeatedly cooled as it circulates about the mechanisms

In general, BOTH FRICTION AND OPERATING TEMPERATURES in bearings increase with a greater unit bearing pressure; with thinner films of the lubricant, if below a definite minimum; with a high velocity of rubbing or rotation of the journal; and with a

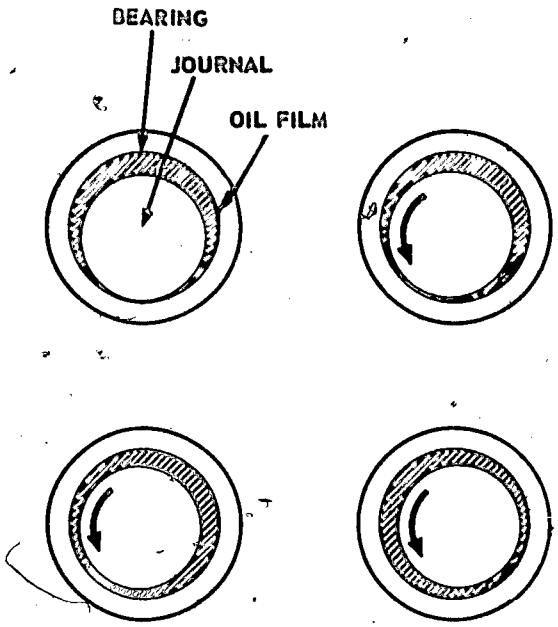

47.78

Figure 7-23.—The oil film separates the rotating shaft from the bearing.

higher viscosity of the lubricant. (Viscosity refers to the flowing qualities of a liquid. Water and gasoline or liquids which flow freely, have a low viscosity. Cold molasses and honey do not flow freely; therefore, they have a high viscosity.)

Bearing Lubrication

Most of the moving parts of a machine are supported in bearings that permit them to rotate freely. Lubrication consists of supplying these bearings with oil. The oil forms a film on the surfaces of the shaft and the bearing, and keeps them separated (fig. 7-23). An oil must be selected that has enough body to keep the metal surfaces from touching each other during ALL operating conditions.

Bearings that carry a heavy load are sometimes lubricated with grease. These bearings are equipped with standard grease cups or zerk fittings like those on an automobile. The cups must be kept filled at all times. The shafts of some rotary water pumps are lubricated with a small amount of water that leads through the bearings and moisten the packing.

Lubricating Systems

Each turbine is provided with a lubricating system that supplies oil under pressure to the bearings. The system consists of a sump or reservoir for storing the oil, an oil pump, a strainer, a cooler, temperature and pressure gages, and the necessary piping to carry the oil to the bearings and back to the sump. The location and arrangement of these parts vary with each make and type of turbine.

The lube oil pump is generally a gear-type pump. A definite pressure is maintained in the oil feed lines. A pressure relief valve allows excess oil to recirculate back to the suction side of the pump.

Quite often dual strainers are connected in the line so that the system can operate on one strainer while the other one is being cleaned. The tube-in-shell type of cooler is generally used with sea water circulating through the tubes and the oil flowing around them. The temperature of the oil is controlled by adjusting the valve that regulates the amount of sea water flowing through the tubes.

Oil must circulate through the turbine bearings at the prescribed pressure and within certain temperature limits. A pressure gage installed in the feed line and a thermometer installed in the return line indicate whether the oil system is functioning properly. Thermometers are often installed in the bearings to serve as a warning against overheating. If there is a decided drop in oil pressure, the engine should be shut down immediately; even a moderate rise in the oil temperature should be investigated. An oil-level float gage indicates the amount of oil in the sump.

Lubricating Oil and Greases

Many different kinds of lubricating materials are in use, each of them filling the requirements of a particular set of conditions. Animal and

vegetable oils and even water have good lubricating qualities, but they cannot withstand high temperatures. Mineral oils, similar to the oils used in an automobile engine, are the best type of lubricant for modern machinery operating at high speeds and high temperatures. Some heavy-duty bearings are lubricated with grease in about the same way that the spring shackles and steering gear of your car are greased.

Mineral lubricating oils are derived from crude oil in the same process which produces gasoline, kerosene, and fuel oil. They vary according to the type of crude oil and the refining methods used. The same type of oil is usually made in several grades or weights. These grades correspond to the different weights of oil for an automobile varying from light to heavy.

Oils used in the Navy are divided into 9 classes, or series, depending on their use. Each type of oil has a symbol number that indicates its class and viscosity. For example, symbol 2190 oil is a number 2 class of oil with a viscosity of 190 Saybolt Seconds Universal. The viscosity number represents the time in seconds that is required for 60 cubic centimeters (cc) of the oil, at a temperature of 130° F, to flow through a standard size opening in a Saybolt viscosimeter (fig. 7-24).

A 2190TEP oil is used for all propulsion turbines and reduction gears. The letters TEP indicate that the oil has been treated to give it water-protecting and corrosion-resisting properties, and extra load carrying capacity. This oil is also used in the turbines that drive the various kinds of pumps and blowers, except those pumps that are driven through a worm gear which use a Navy symbol 3080 oil.

Lubricating greases are mixtures of soap and lubricating oil. Fillers, such as graphite, are also added to some greases to make the grease more effective for certain lubrication requirements.

The soaps used on the common SOAP AND OIL GREASES are chemical compounds formed by fats or fatty acids reacting with various alkaline materials such as lime, soda, aluminum, zinc, barium, lithium, lead, and potassium.

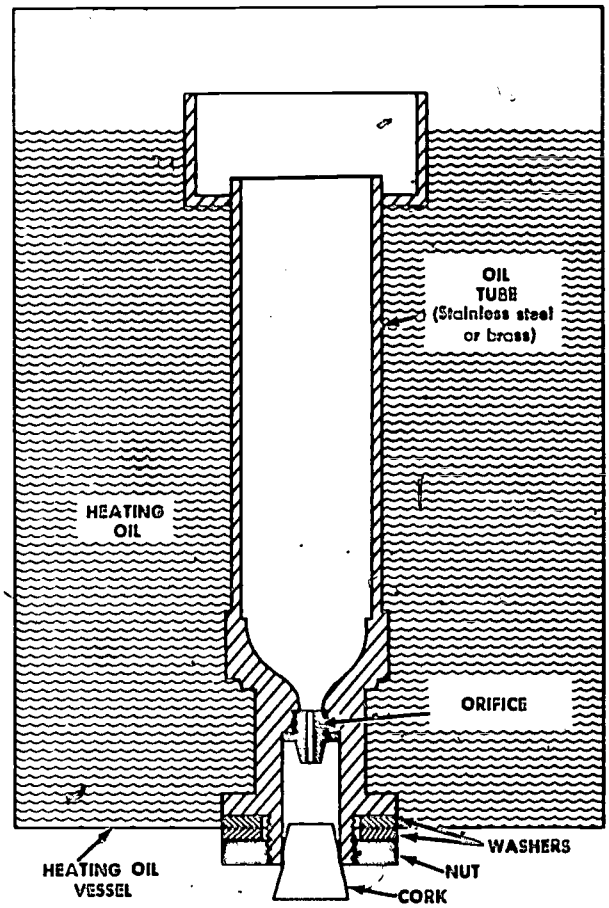

38.214

Figure 7-24.—Details of the viscosimeter tube.

The common SODA SOAP GREASES are used for applications where no water is present and where operating temperatures approach 200° F. The common LIME SOAP GREASES do not absorb moisture or emulsify as readily as the soda soap greases, but have lower melting points. They are used as general purpose greases for light load applications at ordinary operating temperatures. These two types of greases will satisfactorily lubricate the majority of machinery.

Certain lubricating greases contain additives. These SPECIAL ADDITIVE GREASES are identified by the additive. For example, LEAD OLEATE SOAP GREASES are used for certain bearing surfaces which are so heavily loaded that

ordinary grease will not maintain a film to prevent contact of the rubbing surfaces. EXTREME PRESSURE GREASES also incorporate special additive agents to provide necessary film strength.

OXIDATION INHIBITOR GREASES have an additive incorporated to ensure better stability at high temperatures and to prevent rusting under these conditions. In GRAPHITE GREASES, the added graphite acts as a mild abrasive to help smooth roughened surfaces, and acts as a filler to smooth over unequal surface spots. It also substitutes its own low friction for that of the metal it covers; this is especially important where a bearing is exposed to temperatures so high that ordinary grease or oil would break down. Except for such high temperatures, graphite grease should not be used in bearings which are in first-class condition.

Each of thses several types of greases is supplied in three grades: soft, medium, and hard. SOFT GRADES are used at high speed under light pressure; the MEDIUM GRADES are used at medium speeds under medium pressure; and the HARD GRADES are used at slow speeds under heavy pressure.

Standard Navy Lubrication

Always be sure that you are using the specified lubricant for the individual machinery part, unit, or system you are responsible for operating or maintaining.

Most ships make up LUBRICATING CHARTS for quick reference on this information. These charts generally contain a line diagram of the unit or system, point of lubrication, symbol of lubricant, quantity, and interval of supply—along with applicable general instructions, operating hints, and possible casualties. The charts are generally posted in machinery compartments.

The manufacturer's technical manual for each unit of machinery is the basic reference for the correct lube oil, if no lubrication chart (based on manufacturer's instructions) is available. In addition, the TABLE OF RECOMMENDED OILS can be found in chapter 9450 of *NavShips Technical Manual.*

CHAPTER 8

AUXILIARY MACHINERY AND EQUIPMENT

In addition to the propulsion machinery and equipment, you will become acquainted with other types of machinery, such as refrigeration equipment, air conditioning equipment and distilling plants. You will also become acquainted with the steering gear, the anchor windlass and capstan, lube oil purifiers, laundry equipment, galley equipment, air compressors, cranes, elevators, and winches. The information provided in this chapter will be general in nature; primarily, we shall discuss the location and the function of the auxiliary machinery and equipment mentioned above.

REFRIGERATION EQUIPMENT

There are two basic types of mechanical refrigeration systems used in the Navy, the steam-jet refrigeration system and the vapor compression cycle refrigeration system. The steam-jet system is used on some naval ships for air conditioning and on some merchant ships for large area, moderate temperature refrigeration. The steam-jet plant (fig. 8-1) consists of a flash tank, a booster ejector, a condenser, air ejectors, and the necessary pumps and piping. The flash tank (sometimes called the evaporator) is maintained under exceptionally high vacuum by a steam-jet booster ejector as water is sprayed into the flash tank, part of each drop flashes into vapor and thereby cools the unvaporized portion of each drop to approximately 50°F, or lower depending on the capacity of the unit. The cooled water falls to the bottom of the shell. It is then pumped to the cooling coils and returned to the flash tank at a temperature of approximately 55°F.

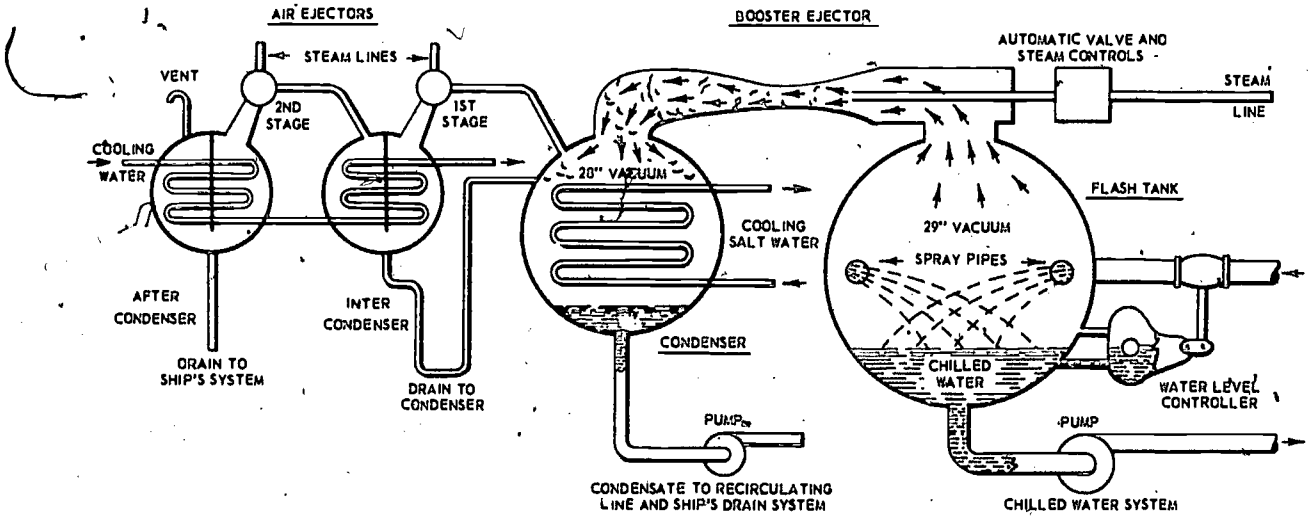

47.89

Figure 8-1.—Steam-jet refrigeration system.

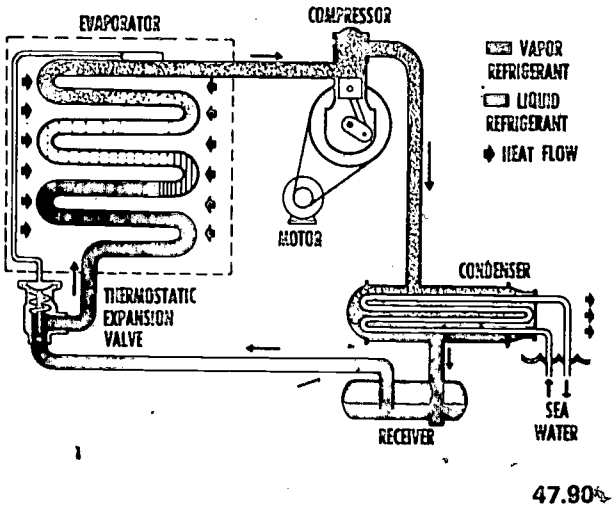

Figure 8-2.—Vapor compression (R-12) cycle refrigeration.

The vapor compression cycle refrigeration system (fig. 8-2) is most commonly used on naval ships in various applications, such as refrigerated ship's stores, refrigerated cargo, and unitary (self-contained) refrigeration (as ship's service store equipment).

Ship's stores spaces are refrigerated for the preservation of food supplies. The insulated compartments for cold storage spaces are the walk-in type. The equipment selected to cool these spaces is designed to maintain certain temperatures: for ships designed before 1950, the meat room at 15°F, fruit and vegetable rooms at 40°F, butter and egg rooms at 32°F; and for ships designed since 1950, the freeze room at 0°F and the chill room at 33°F.

Auxiliary ships have refrigerated cargo spaces for stowage of perishable food that is intended for the forces afloat and for advanced bases. Approximately 30 to 60 percent of the refrigerated cargo space is maintained at 0°F (at -5°F on the latest designed ships). The remainder of the refrigerated area is maintained at 33°F to 35°F.

Unitary refrigeration systems are of two types—remote and self-contained. The remote type is a complete unit except that the source of refrigeration is located separately and is not contained within the unit cabinet. Equipment of this type includes soda fountains and ice cream hardening machines.

The self-contained units, which have the refrigeration source within the unit cabinet, include drinking water coolers, refrigerators, and frozen food cabinets.

Other refrigeration equipment includes two types of ice-making machines. One type is a self-contained unit which makes ice cubes. The other is a tank-type which makes large slabs of ice. The tank-type ice machine is normally located in a separate machinery room which is identified as the ice machine room. This type is installed on auxiliary ships such as tenders and repair ships.

AIR CONDITIONING EQUIPMENT

Air conditioning is installed on naval ships for certain spaces where personnel efficiency, health, safety, or operation of equipment may be endangered by high temperatures or high humidity.

Some of the spaces that might be air conditioned include the radio and radar control spaces, sick-bay areas; and living and berthing spaces. The radio and radar control spaces are usually air conditioned because of the high heat given off by the equipment. This heat, especially in combination with high humidity, could be dangerous to the operator and the equipment. Air conditioned sick-bay areas have proven advantageous in that they help to speed recovery. The living and berthing spaces are often air conditioned, both to provide comfort for the crew and to increase personnel efficiency.

There are two basic types of air conditioning equipment used aboard ship. One type uses chilled water for the cooling medium; the other uses refrigerant R-12 to carry away the heat. Most of the air conditioning equipment aboard Navy ships uses the refrigeration equipment for the removal of heat from the circulating water or refrigerant. Heat is removed by the cooling coils of the refrigeration equipment. There are also some smaller self-contained units used aboard ship, similar to the window type used in homes.

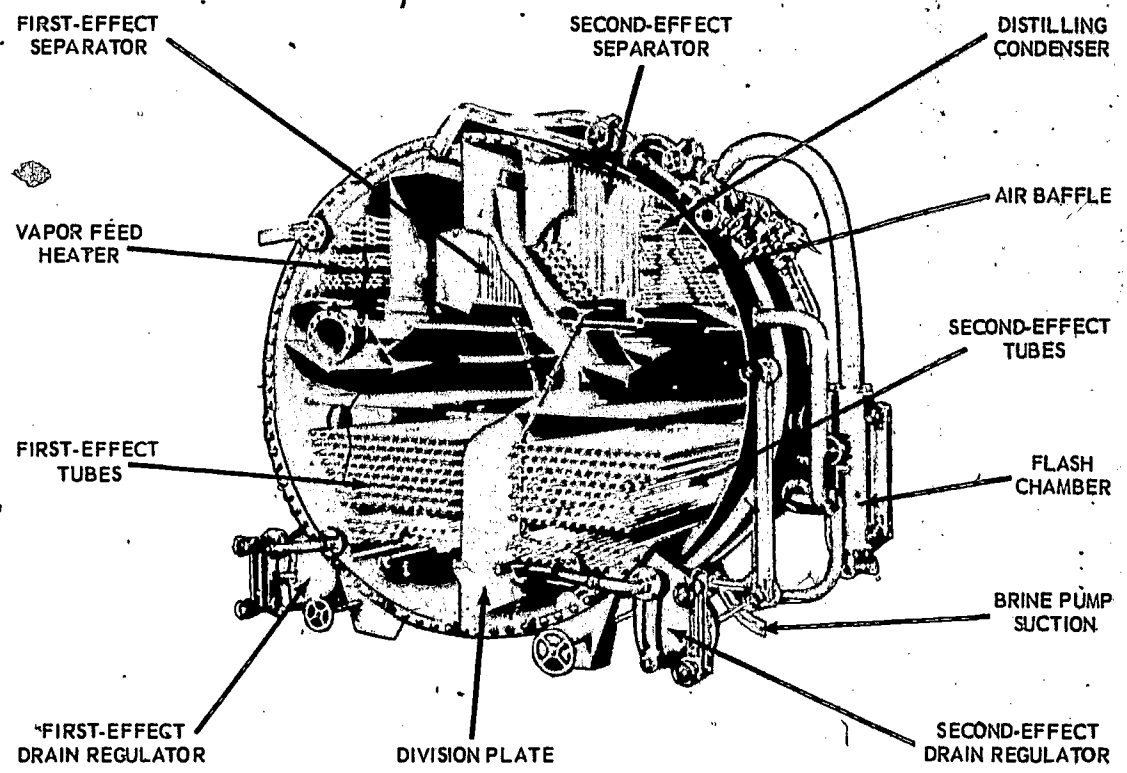

47.117

Figure 8-3.—Soloshell double-effect distilling plant.

DISTILLING PLANTS

The two basic types of distilling plants installed aboard naval ships are the vapor compression distilling plant and the steam distilling plant. The main difference between the two types of distilling plants is in the method used to apply heat to the sea water. In the vapor compression plant, the source of heat is obtained from electrical energy.

The vapor compression type distilling plant was first developed primarily for submarine service, where the absence of steam made it necessary to supply another form of heat energy. However, on newer type submarines, this type plant is currently used for back-up only. It is also used on older, small diesel-driven surface craft where the daily demand for fresh water does not exceed 4,000 gallons per day (gpd). The vapor compression consists of three main components—evaporator, compressor, and heat exchanger.

Steam operated distilling plants are classified as coil, submerged, tube, vertical basket, and flash types. The coil type is found on a few older auxiliaries, while the submerged tube type is found on most older ships. The vertical basket and flash types are newer designs and have been installed on some combatant ships constructed in the last 15 years. Some submerged tube types were also installed during this period.

In the vertical basket type, low-pressure steam flows into a corrugated basket that is surrounded by sea water. Here the steam gives up its heat to boil the sea water and is then condensed. The fresh water vapor from the boiling sea water is condensed and then removed as distillate (fresh water).

In the flash type, preheated feed water is discharged into a vacuum chamber where a portion of the water is vaporized (flashes into steam). The remaining water passes into a second flash chamber where further vaporization

takes place. Any number of flash chambers, where vaporization takes place, can be installed. Each stage has a condenser in which the fresh water vapor is condensed.

There are three basic types of submerged-tube type distilling plants: soloshell double-effect (fig. 8-3), the triple-effect, and the two-shell double-effect. The principal difference between the triple-effect plant and the two-shell double-effect plant is the number of stages of evaporation. In the double-effect plant evaporation takes place in two stages, while in the triple-effect plant evaporation takes place in three stages.

The most commonly used 20,000 gpd two-shell double-effect plant is built with two horizontal cylinder evaporator shells mounted parallel to each other. The triple-effect distilling plant is similar to the two-shell double-effect plant except that the triple-effect plant has an intermediate evaporating stage. A standard triple-effect, 20,000 gpd plant is illustrated in figure 8-4.

Almost all low-pressure distilling plants up to and including the 12,000 gpd capacity plant are of the soloshell double-effect type. This type consists of a single shell that has a vertical partition which divides the shell into two evaporator shells.

One type of 20,000 gpd capacity, soloshell double-effect plant is installed on some of the older ships. Where it is necessary to furnish 40,000 gpd, two such plants are installed. Some older destroyers are equipped with two soloshell evaporator plants—one, located in the forward engineroom with a capacity of approximately 12,000 gpd; the other, located in the aft engineroom, with a capacity of approximately 4,000 gpd.

STEERING GEARS

There are two basic types of steering mechanisms in use in the Navy. One is the electromechanical steering gear, used extensively on small noncombatant ships. The other, and most common, type is the electrohydraulic steering gear. In the electromechanical steering gear, an electric motor is the prime mover. The electric motor receives a signal from the bridge

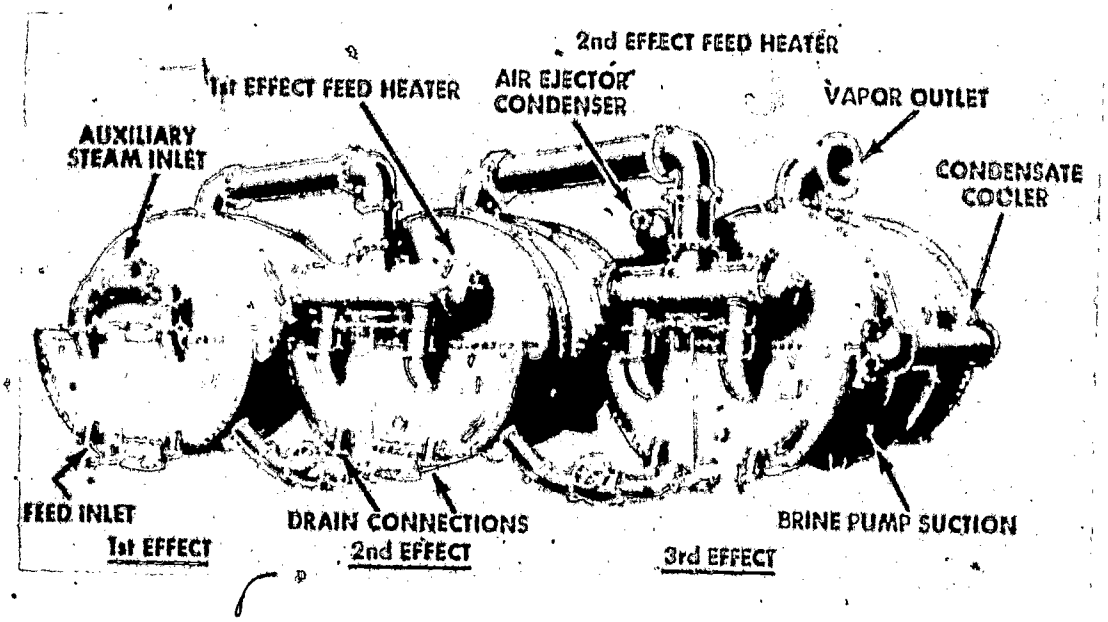

47.118.1

Figure 8-4.—20,000 gpd triple-effect distilling plant.

and, through shafting and a gear arrangement, moves the rudder.

In the electrohydraulic steering gear, movement of the rudder is obtained from hydraulic rams operating in cylinders that are connected to variable delivery pumps. Development of this type was prompted by the large electrical power requirement necessary to steer ships of large displacement and high speeds.

The electrohydraulic steering gear provides some distinct advantages over the electromechanical steering gear:

1. Little friction between moving parts
2. Immediate responses to movement of the steering wheel
3. Requires small deck space and head room
4. Savings in weight
5. Flexibility and dependability.

There are various types of electrohydraulic steering gears in use, but their operating principles are basically the same. Some ships have double hydraulic rams and cylinders mounted fore and aft, as shown in figure 8-5, while other ships employ a double cylinder, single-ram, mounted athwartships. A typical single-ram electrohydraulic steering gear is illustrated in figure 8-6.

Emergency steering gear is provided on all combatant and auxiliary naval ships that have electrohydraulic steering gear. Generally, large combatant ships have a duplicate hydraulic steering gear for emergency use. On other ships the emergency gear consists of a hand-operated hydraulic pump.

ANCHOR WINDLASS AND CAPSTAN

A windlass is a piece of deck machinery used primarily for paying-out and heaving-in an anchor chain. A wildcat (drum), fitted with whelps to engage the anchor chain may be mounted either vertically or horizontally at the end of the windlass shaft. (A whelp is any one of

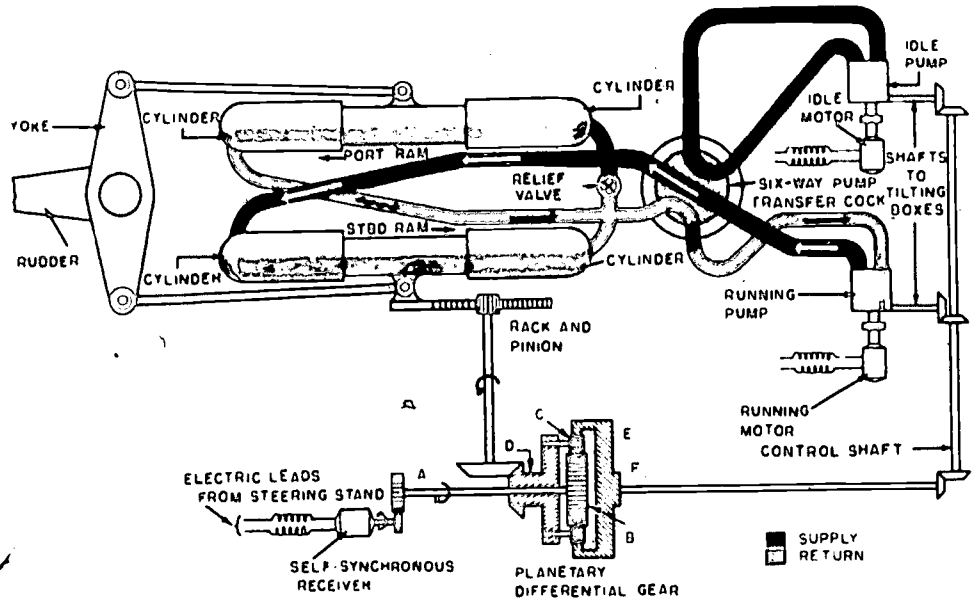

47.139X

Figure 8-5.—Diagrammatic arrangement of a double-ram electrohydraulic steering gear.

the ribs or ridges on the drum of a windlass. It looks much like the sprocket wheel of a chain fall.)

General requirements of the anchor windlass are that it must be simple, rugged, and reliable. It must be capable of reversal and have suitable brakes.

There are three general types of power-driven anchor windlasses: electrohydraulic, electric, and steam. Hand-operated windlasses are used on small ships where the weight of the anchor gear can be handled without excessive effort by operating personnel.

The electrohydraulic anchor windlasses are advantageous where the load varies through a wide range because of the amount of anchor chain payed out, the force of the wind, the strength of the tide, and the type of bottom in which the anchor is set. Figure 8-7 illustrates a typical electrohydraulic anchor windlass arrangement.

Some older naval ships are equipped with a geared windlass driven by a steam engine or an electric motor. Some of the new smaller combatant ships such as destroyers and destroyer escorts are equipped with the electric motor type. Figure 8-8 illustrates an electric windlass for a modern destroyer.

A capstan is a spool-shaped, vertically mounted drum used for heaving-in on heavy mooring lines. Figure 8-9 shows a vertical shaft anchor windlass capstan which is normal topside equipment on a destroyer. The capstan is a component part of the anchor windlass, as shown in figure 8-7 and figure 8-8.

LUBE OIL PURIFIERS

Purifiers, normally located in the engineroom, are used to free contaminated lube oil or diesel oil of water, sediment, and the other impurities. The purifiers used in the Navy operate on the principle of centrifugal force;

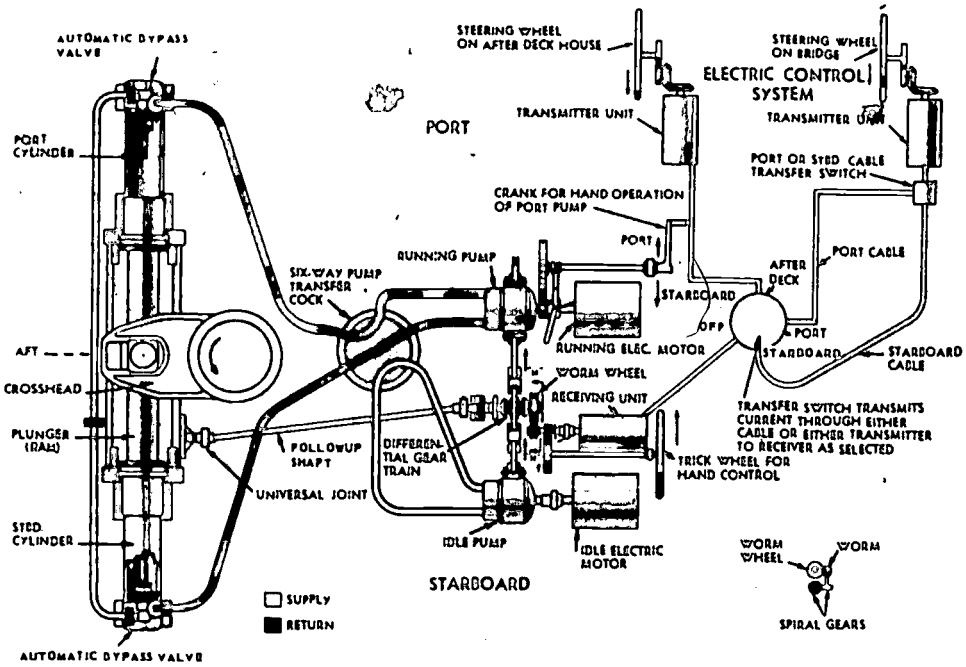

Figure 8-6.—Diagram of typical single-ram electrohydraulic steering gear system.

27.83X

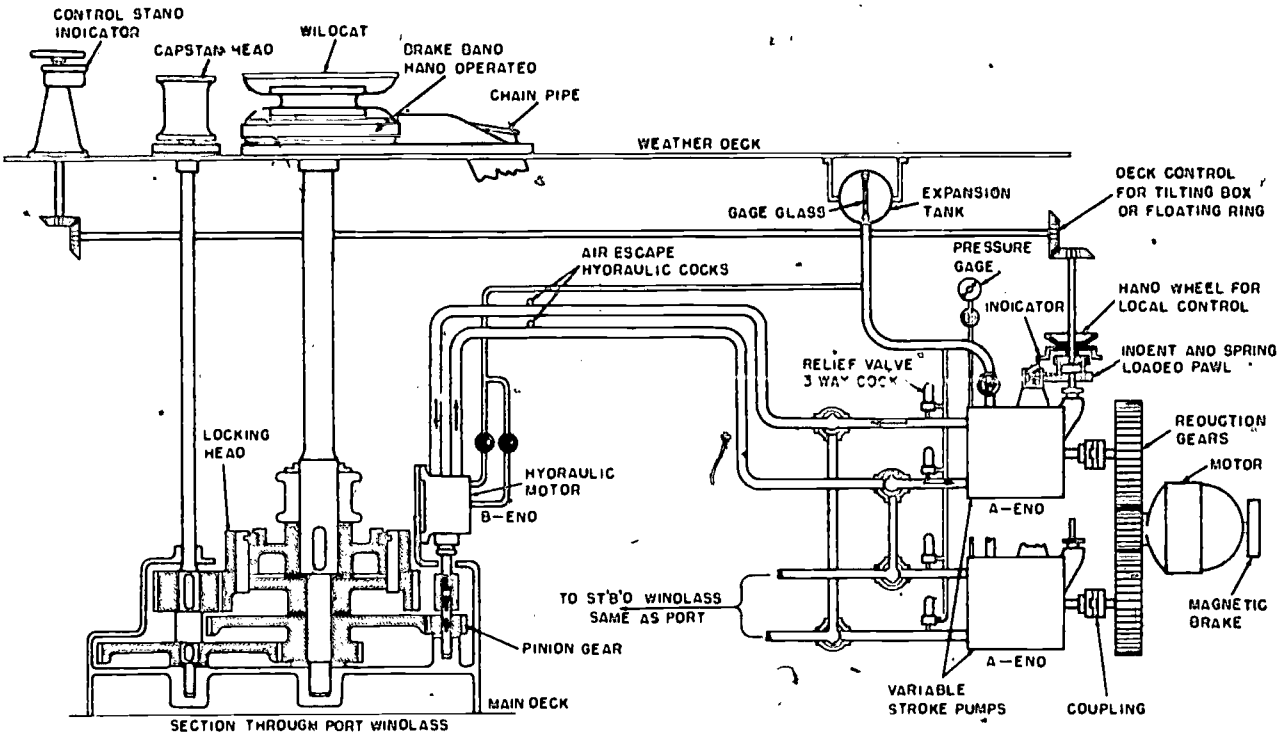

Figure 8-7.—Typical electrohydraulic anchor windlass arrangement. 47.143X

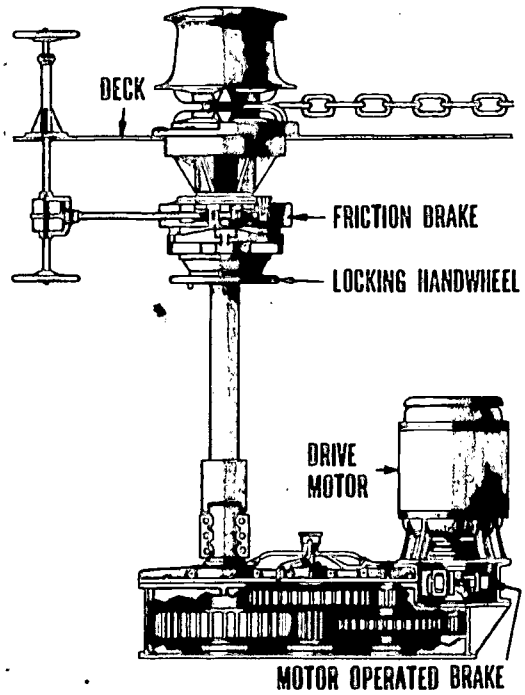

Figure 8-8.—Electric windlass. 3.224X

that is, a bowl or hollow cylinder is revolved at high speeds while contaminated oil is passed through it. This procedure separates the impurities from the oil. There are two types of purifiers, the tubular type and the disk type.

The hollow cylinder or tubular type is relatively small in diameter and is operated at high speed. The cylinder is fitted with a three-wing device that keeps the liquid rotating at the speed of the bowl without slippage. Figure 8-10 shows the tubular type purifier.

The disk type purifier has a bowl of larger diameter, which is fitted with a series of disks that separate the liquid into thin layers. A sectional view of a disk type purifier is shown in figure 8-11.

AIR COMPRESSORS

There are many uses for compressed air aboard ship and it would be difficult to mention all of them. Some of the more common uses

include: operating pneumatic tools; ejecting gas from ship's guns; starting diesel engines; charging and firing torpedoes; operating gun counterrecoil mechanisms; and operating automatic combustion control systems. Compressed air is supplied to the various systems by high-pressure, medium-pressure, or low-pressure air compressors, as appropriate. Reducing valves reduce a higher pressure to a lower pressure for a specific system.

Air compressors are classified in a number of ways. A compressor may be single-acting (compression on one end of the stroke); double-acting (compression on each end of the stroke); single-stage (one cylinder); multistage (more than one cylinder); and the compressor design may be such that the pistons operate horizontally, vertically, or at an angle. Compressors are also classified according to the type of compressing element; the source of driving power; the method by which the driving unit is connected to the compressor; and the pressure that is developed.

Air compressors may be of the centrifugal, rotary, or reciprocating type. The type used is determined by the volume and pressure of air desired. Most of the compressors used in the Navy are of the reciprocating type.

Compressors are driven by electric motors, internal combustion engines, steam turbines, or reciprocating steam engines. The air compressors used most in the Navy are driven by electric motors.

Low-pressure compressors are those which have a discharge pressure of 150 psi or less. Medium-pressure compressors are those which have a discharge pressure of 151 psi to 1000 psi. Compressors which have a discharge pressure above 1000 psi are classified as high-pressure air compressors.

CRANES

Cranes are designed to raise a load, lower it, and move it in horizontal directions. You will

47.146

Figure 8-9.—Vertical shaft anchor windlass capstan head.

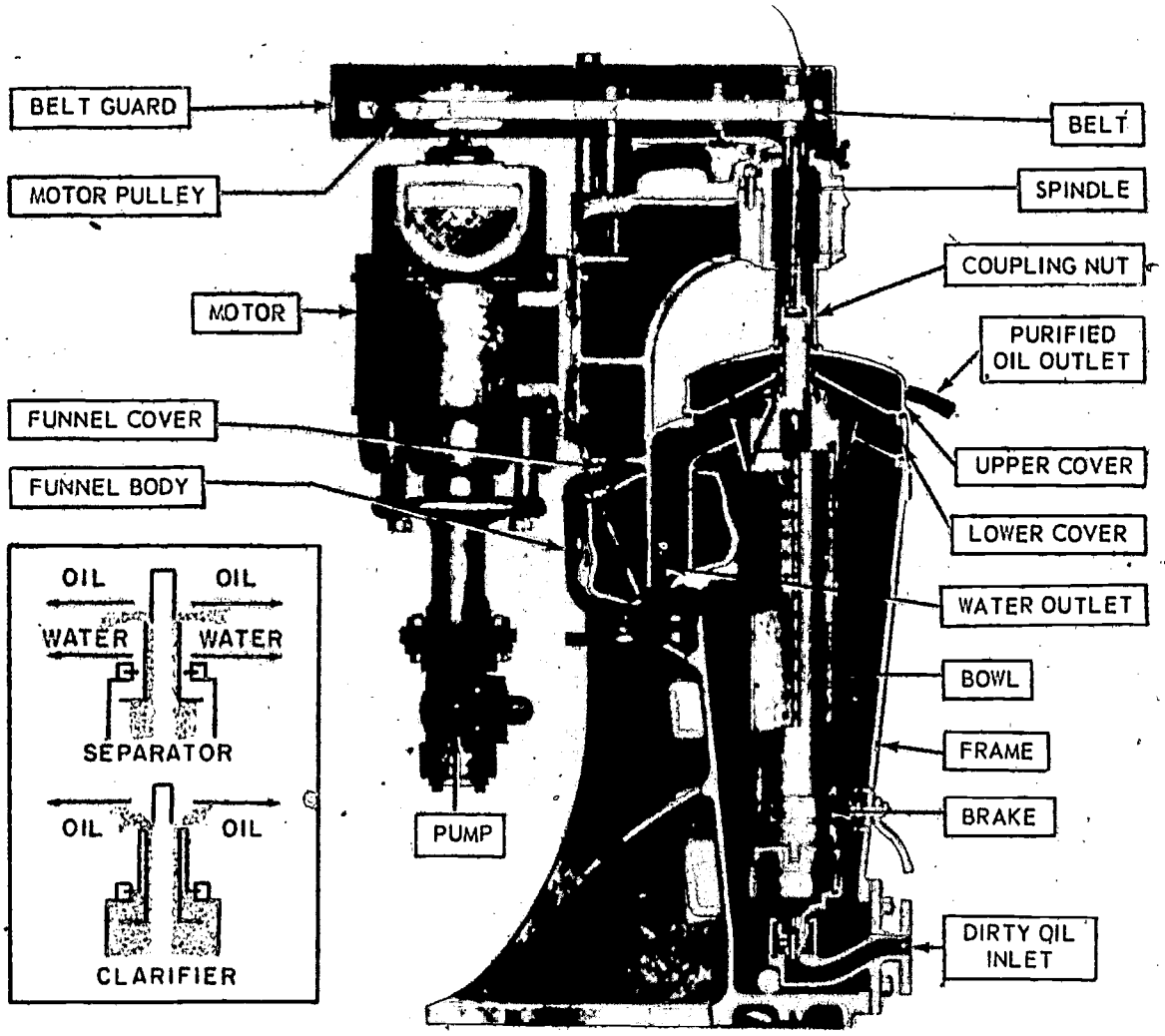

47.86

Figure 8-10.—Tubular type centrifugal purifier (Sharples).

find cranes installed on carriers, cruisers, and auxiliaries. Cranes are used for handling airplanes, boats, bombs, torpedoes, mines, sweep gear, missiles, trucks, and stores. Some submarines are also equipped with cranes for handling missiles.

In general, cranes may be electrically-driven, engine-driven, or hand-driven. Cranes constructed for very heavy loads (lifting heavy aircraft, boats, or torpedoes) are usually electrohydraulic.

Detailed information concerning shipboard cranes can be obtained from applicable manufacturers' technical manuals.

ELEVATORS

Many Navy ships are equipped with elevators which are used to handle bombs, airplanes, freight, torpedoes, and ammunition. Shipboard elevators are divided into two general classes—electrohydraulic and electromechanical.

ELECTROHYDRAULIC ELEVATORS are divided into two general types—the direct plunger lift and the plunger-actuated cable lift.

The platform of the DIRECT PLUNGER LIFT ELEVATOR is raised or lowered by one or more hydraulic rams, which are located under the platform. During the hoisting of a platform, hydraulic oil is pumped into the ram from a high-pressure tank (approximately 950 psi). Lowering of the platform is performed by discharging the oil from the rams into a low-pressure tank, which is under an approximate pressure of 230 psi.

Pressure is maintained in the high-pressure tank by two hydraulic pumps (variable stroke), which take suction from the low-pressure tanks. Special control valves, located in the pressure and exhaust lines, regulate elevator speeds by varying the amount of hydraulic oil admitted to, or discharged from, the rams. Mechanical locks allow the platform to be locked and held in position at deck level. Automatic quick-closing valves in the oil line prevent an unrestricted fall of the elevator.

The platform of the PLUNGER-ACTUATED CABLE LIFT ELEVATOR is raised by wire rope fastened to the platform at either two or four points. Most hydraulic airplane elevators are of this type. The wire ropes in an airplane elevator are operated through a series of pulleys by a horizontal hydraulic ram located below the hangar deck.

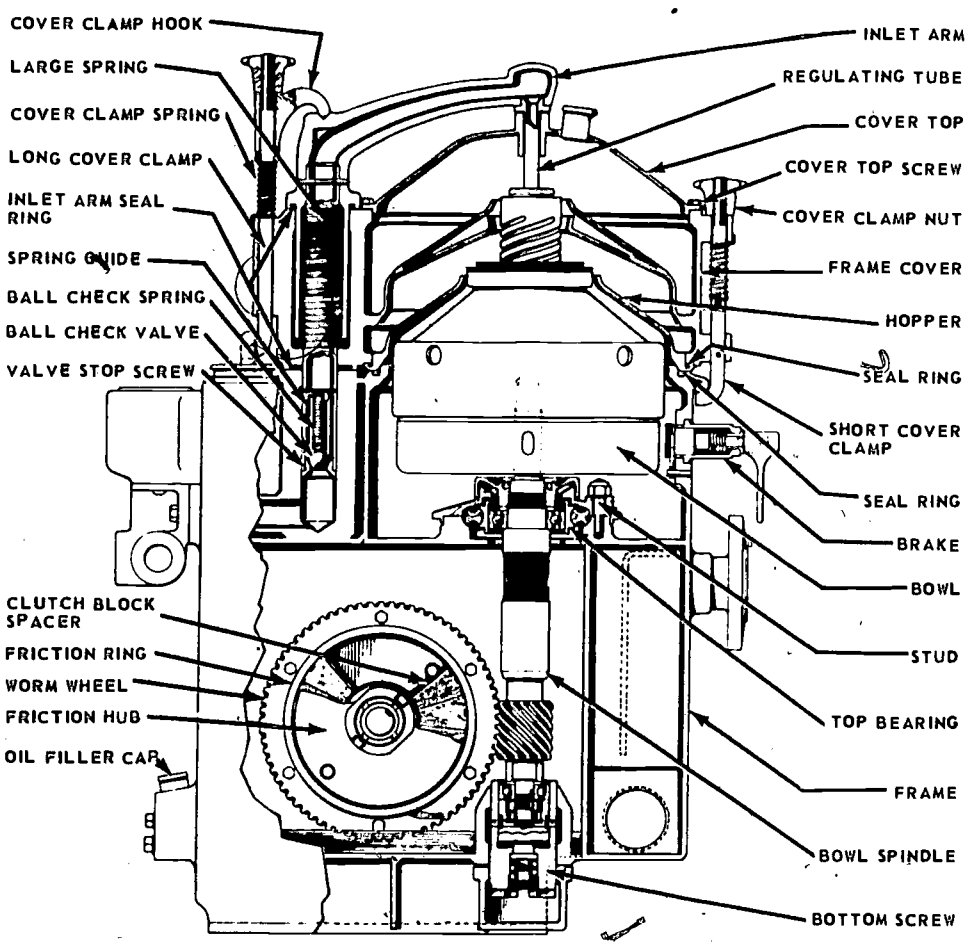

47.83

Figure 8-11.—Dish type centrifugal purifiers.

Special safety devices engage the guide rails of the elevators, stop the fall, and hold the platform when one group of wire ropes fails.

ELECTROMECHANICAL ELEVATORS are used for freight, bombs, and stores. In elevators of this type, the platform is raised and lowered by one or more wire ropes which pass over pulleys and wind or unwind on hoisting drums. Hoisting drums are driven through a reduction gear unit by an electric motor. An electric brake stops and holds the platform. The motor has two speeds (full speed and low, or one-sixth speed). Control arrangements allow the elevator to start and run on high speed. Low speed is used for automatic deceleration as the elevator approaches the selected level. The platform travels on two or four guides. Hand-operated or power-operated lock bars, equipped with electrical interlocks, hold the platform in the stowed position or accurately hold the platform when on- or off-loading tracks are used.

WINCHES

A winch is a piece of deck machinery that has a drum or drums on a horizontal shaft for

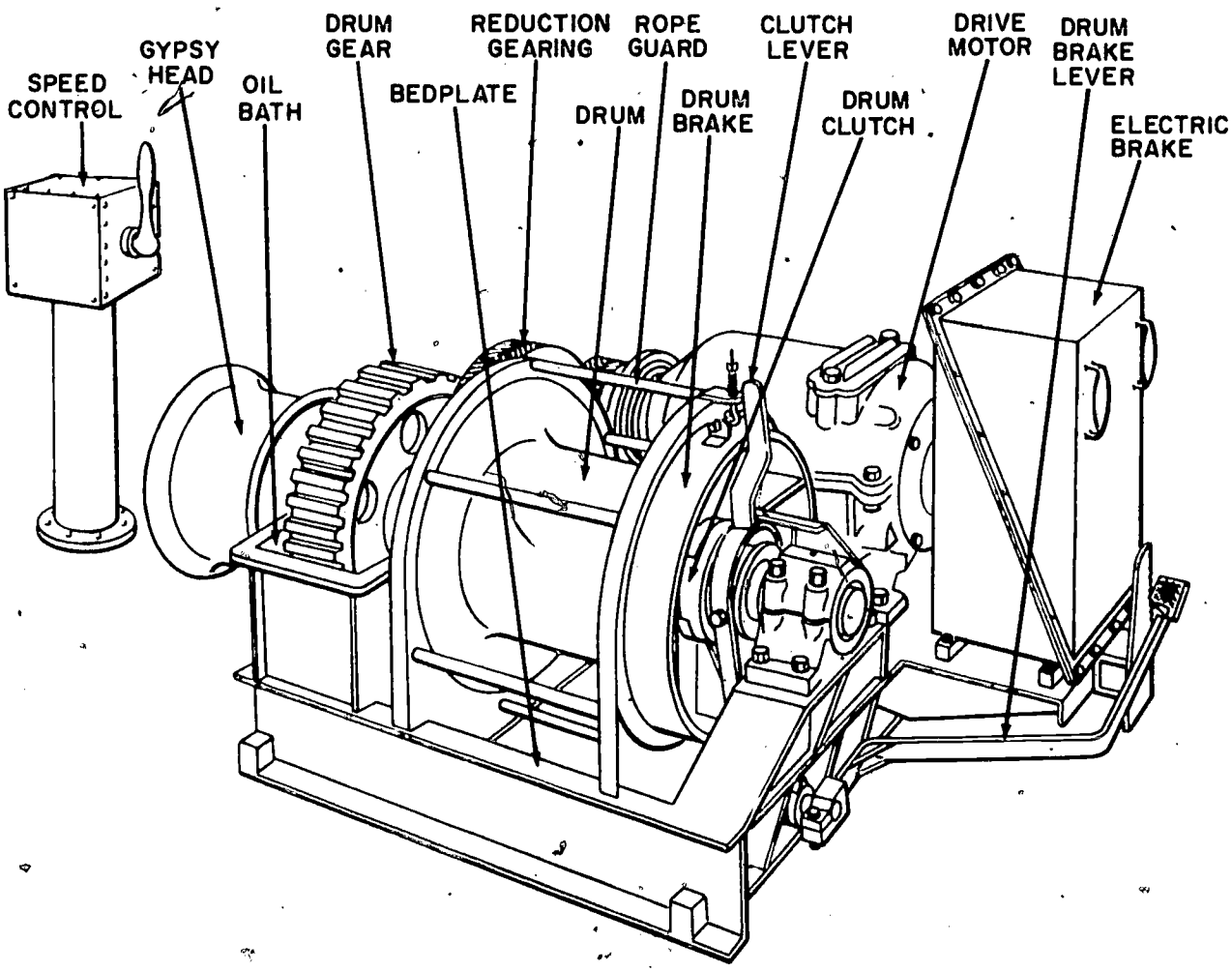

80.149

Figure 8-12.—Units of an electromechanical winch.

handling loads with wire rope. In addition, cargo winches may be equipped with one or two gypsy heads fitted for handling manila rope. Figure 8-12 illustrates the units of an electromechanical winch.

Winches are of the steam, electromechanical, or electrohydraulic types. Winches handle wire rope used with equipment such as booms and davits for handling boats and cargo; for fueling and replenishment at sea; and for miscellaneous operations when the handling of rope under tension is required.

Steam winches are normally installed on such ships as tankers, where use in the vicinity of flammable materials is required. Other older type auxiliary ships, which have direct-current power supplies, use electromechanical winches where d-c motors provide the desired speed control of the winch drum or gypsy head. Since newer auxiliary ships and all combatant ships do not have direct-current power supplies, they are equipped with electrohydraulic winches. In an electrohydraulic winch, the stroke adjustment of the hydraulic pump provides the desired speed control of the drum and the gypsy head.

LAUNDRY EQUIPMENT

Prior to 1914, personnel aboard naval ships washed their laundry by hand. Their equipment consisted of a bucket, soap, and water. Today most all naval ships are equipped with laundry facilities. Carriers, tenders, and repair ships also have drycleaning equipment.

The laundry equipment in a modern ship's laundry consists of washer-extractor combinations, dryers, various types of ironing and pressing equipment, plus numerous miscellaneous items such as laundry marking machines.

GALLEY EQUIPMENT

The food preparation and service equipment located in the galley and messing spaces aboard naval ships is designed for quantity food service.

Galley equipment is used for the cooking and preparation of food for use in the general mess. This equipment consists of ranges, ovens, griddles, deep-fat fryers, mixing machines, meat slicing machine, cube steak machine, coffee urns, toasters, steam-jacketed kettles, steam tables, scales, refrigerators, cooking utensils, and dishwashing machine. Other equipment that are used specifically for vegetable preparation are the machine-driven potato peelers, food cutters, and the french-fry cutters. Normally, the latter three pieces of equipment are located in a vegetable preparation room.

On large ships such as carriers, tenders, and repair ships, there is also a meat cutting room (butcher shop) where meats, fish, and poultry are prepared for cooking. The equipment normally found in this area consists of meat-cutting blocks, meat-grinding machines, power-driven meat-cutting bandsaw, slicing machines, knives and other meat cutting tools, and hooks for hanging meat.

CHAPTER 9

INSTRUMENTS

Measurement, in a very real sense, is the language of engineers. The shipboard engineering plant has many instruments that indicate to operating personnel conditions existing within a piece of machinery or a system. By proper interpretation of the readings of the instruments, operating personnel can determine whether the machinery, or the system, is operating within the prescribed range.

Recorded instrument readings are used to ensure that the plant is operating properly and also to determine the operating efficiency of the plant. The instruments provide information for hourly, daily, and weekly entries for station operating records and reports. The data entered in the records and reports must be accurate since the engineer officer studies the records and reports to keep up with the condition of the plant. Remember that accurate data entered on the records and reports can be obtained only by reading the instruments carefully.

The instruments, indicators, and alarms discussed in this chapter are included not only because of their relative importance in the engineering plant, but also to give you an idea of the wide range and type of instruments, indicators, and alarms that are used in the engineering plant aboard a naval ship.

Engineering measuring instruments may be classified into the following groups:

1. Pressure gages
2. Thermometers and pyrometers
3. Liquid level indicators
4. Fluid flow meters
5. Revolution counters and indicators.

PRESSURE GAGES

Pressure gages include a variety of Bourdon tube gages, bellows and diaphragm gages, and manometers. The Bourdon tube gages are generally used for measuring pressure of 15 pounds per square inch (psi) and above. The bellows and diaphragm gages and manometers are generally used for measuring pressures below 15 psi.

BOURDON TUBE GAGES

The most common Bourdon tube gages used in the Navy are the (1) simplex, (2) vacuum, (3) compound, and (4) duplex gages. They operate on the principle that pressure in a curved tube has a tendency to straighten out the tube. The tube is made of bronze for pressures under 200 psi and of steel for pressures over 200 psi.

Figure 9-1 shows a Bourdon tube installed in a gage case. The Bourdon tube is in the shape of a C and is welded or sliver-brazed to the stationary base. The free end of the tube is connected to the indicating mechanism by a linkage assembly. The threaded socket, welded to the stationary base, is the pressure connection. When pressure enters the Bourdon tube, the tube straightens out slightly and moves the link connected with the toothed-gear sector. The teeth on the gear sector mesh with a small gear on the pinion to which the pointer is attached. Thus when pressure in the tube increases, the gear mechanism pulls the pointer around the dial and registers the amount of pressure being exerted in the tube.

The simplex gage, shown in figure 9-2, may be used for measuring the pressure of steam, air, water, oil, and similar fluids or gases.

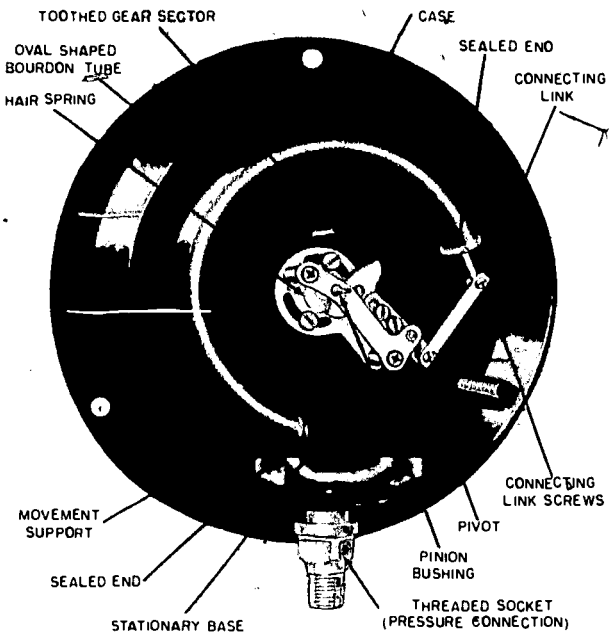

38.211AX

Figure 9-1.—Bourdon tube installed in a gage case.

The Bourdon tube vacuum gage, commonly used on auxiliary condensers to indicate vacuum in inches of mercury, is illustrated in figure 9-3. Vacuum gages indicate pressure below atmospheric pressure, whereas pressure gages indicate pressure above atmospheric pressure.

The compound Bourdon tube gage (fig. 9-4) uses a single Bourdon tube of such great elasticity that it can measure vacuum (in inches) to the left of the zero point and pressure (in pounds per square inch (psi)) to the right of the zero point.

The duplex Bourdon tube gage illustrated in figure 9-5 has two separate gear mechanisms within the same case. A pointer is connected to the gear mechanism of each tube. Each pointer operates independently of the other pointer. Duplex gages are commonly used for such purposes as showing the pressure drop between the inlet side and the outlet side of lube oil strainers. If the pressure reading for the inlet side of the strainer is much greater than the

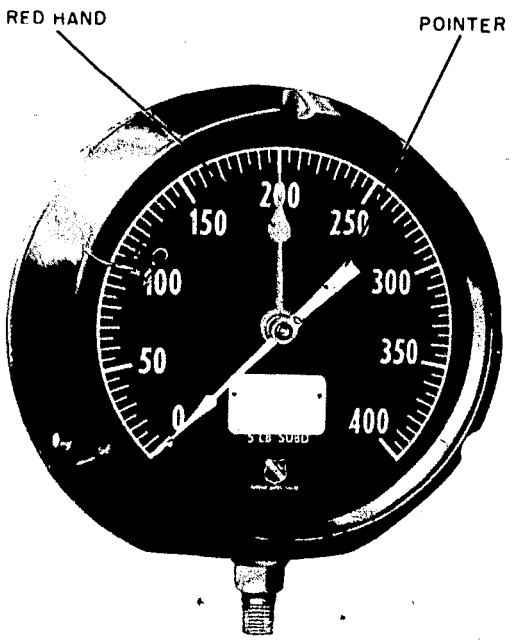

38.211BX

Figure 9-2.—Simplex Bourdon tube pressure gage.

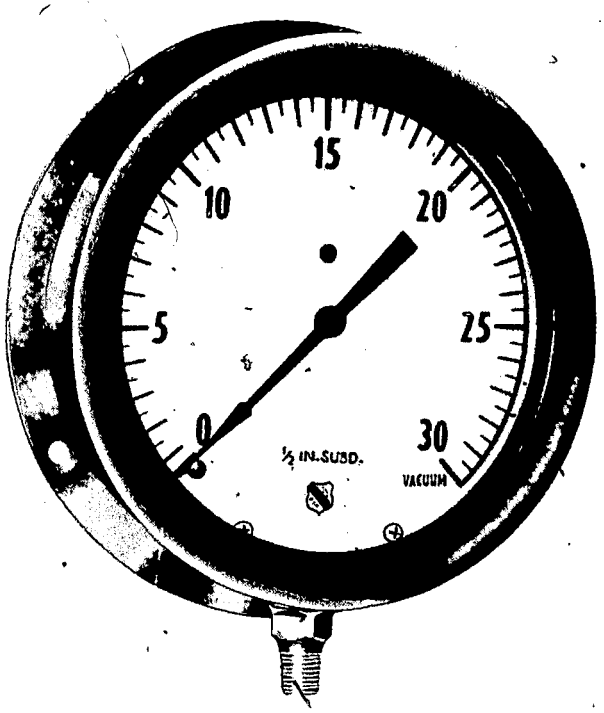

38.211DX

Figure 9-3.—Bourdon tube vacuum gage.

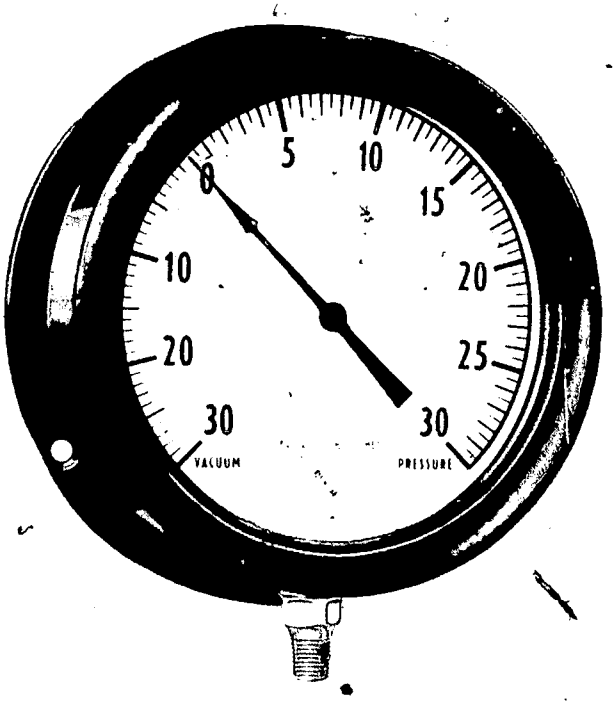

38.211EX

Figure 9-4.—Compound Bourdon tube gage.

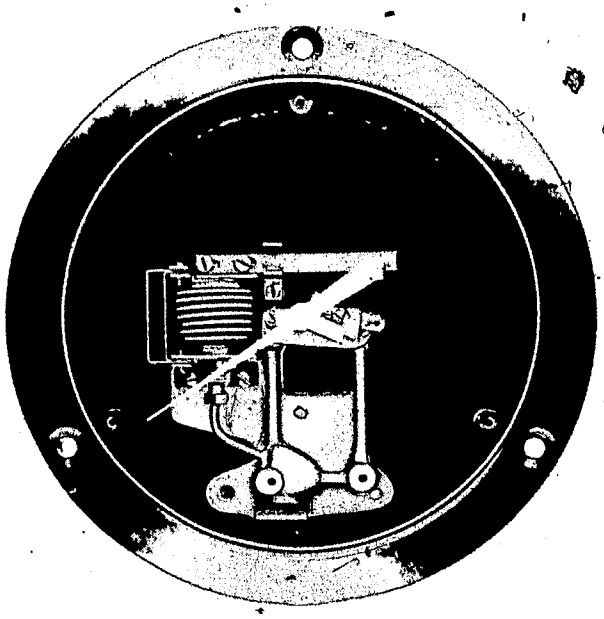

61.3BX

Figure 9-6.—Indicating mechanism of a bellows pressure gage.

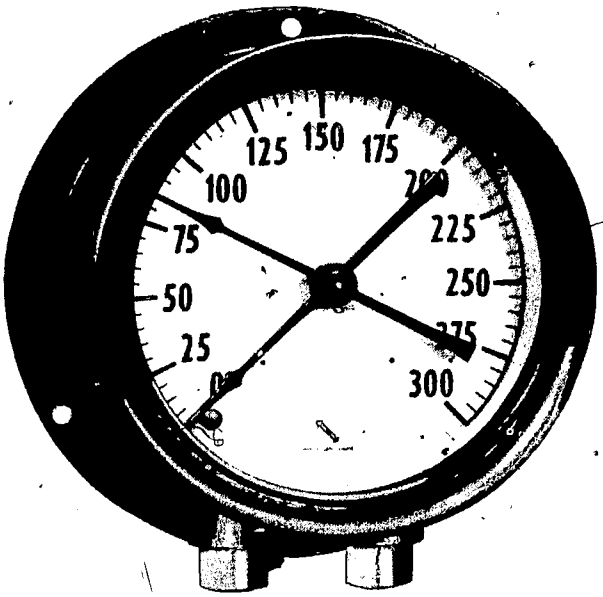

38.211FX

Figure 9-5.—Duplex Bourdon tube gage.

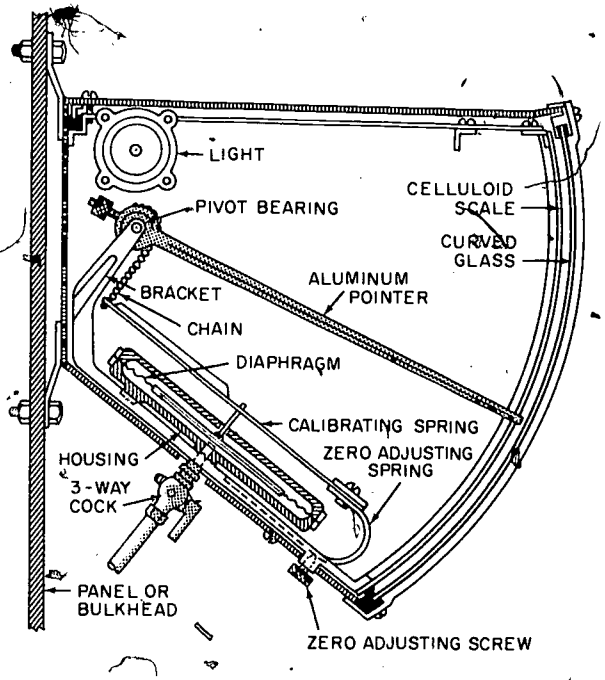

38.212X

Figure 9-7.—Diaphragm air pressure gage.

pressure reading for the outlet side, the strainer is most likely very dirty and is thus restricting the flow of lube oil through the strainer.

BELLOWS GAGES

A bellows gage is generally used to measure pressures less than 15 psi. Some types are satisfactory for measuring draft pressures and for general low pressure measurements. The bellows of the gage is made of stainless steel, brass, beryllium-copper, Monel or phosphor bronze. A bellows is shown in a gage case in figure 9-6.

When pressure increases in the line to a bellows gage, the bellows increases in length and operates a system of gears and levers which are connected to the pointer. The pointer then registers the higher reading on the dial. When the pressure to the bellows gage decreases, the bellows returns to its normal length, returning the pointer toward zero. When the pressure to the bellows is completely removed, the hairspring of the pointer returns the pointer all the way back to zero.

DIAPHRAGM GAGES

Diaphragm gages are sensitive and give reliable indications of small differences in pressure. Diaphragm gages are generally used to measure air pressure in the space between the inner and outer boiler casings.

The indicating mechanism of a diaphragm gage, shown in figure 9-7, consists of a tough, pliable, neoprene rubber membrane connected to a metal spring which is attached by a simple linkage system to the gage pointer.

One side of the diaphragm is exposed to the pressure being measured, while the other side is exposed to the atmosphere. When pressure is applied to the diaphragm, it moves upward, pushing the metal spring ahead. As the spring is pushed up, it moves the pointer, connected to it with a chain, to a higher reading on the dial. When the pressure is lowered the diaphragm pulls the pointer back toward the zero point.

MANOMETERS

A manometer is perhaps the most accurate, least expensive, and simplest instrument for measuring low pressure, or low pressure differentials. A manometer, in its simplest form consists of a glass U-tube of uniform diameter, filled with a liquid. The most common liquids used are water, oil, and mercury. One end of the U-tube is open to the atmosphere and the other end is connected with the pressure to be measured.

Manometers are available in many different sizes and designs. They all operate on the same principle. Two common types of manometers are shown in figure 9-8.

THERMOMETERS AND PYROMETERS

A thermometer is an instrument which measures temperature. The temperature

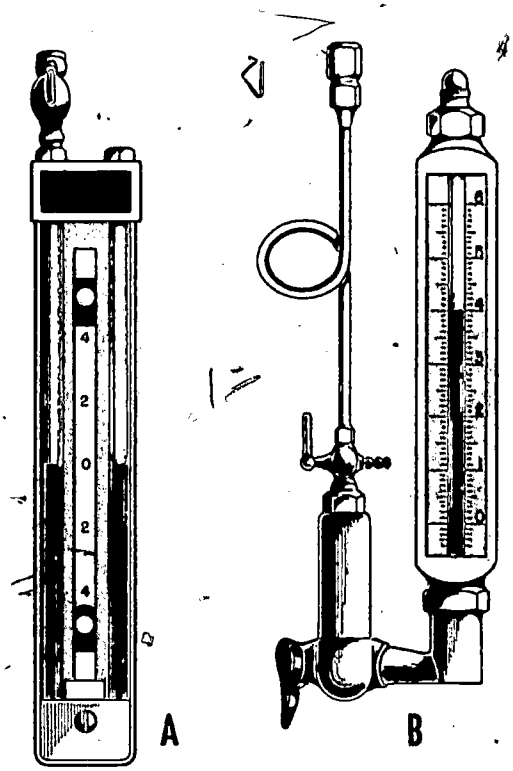

61.4X

Figure 9-8.—A. Standard U-tube manometer.
B. Single-tube manometer.

measured may be that of steam to the main engines, brine in an ice machine, oil and bearings in the main engines, or substances in many other locations. In general, a thermometer measures changes in temperature by utilizing the effect of heat on the expansion of a liquid or a gas.

Thermometers are designed as (1) direct-reading, liquid-in-glass type, (2) bimetallic type, or (3) distant-reading, indicating-dial type thermometers.

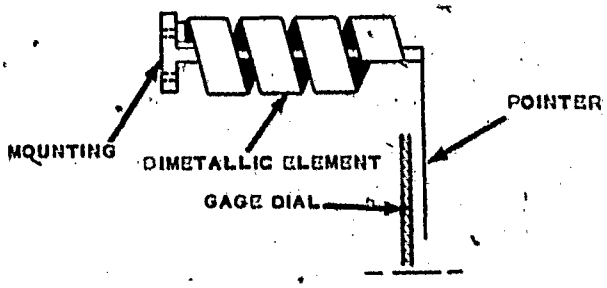

61.27

Figure 9-10.—Bimetallic actuator for a thermometer.

LIQUID-IN-GLASS THERMOMETERS

Liquid-in-glass thermometers are filled with mercury, ethyl alcohol, benzine, water, or some other liquid suitable for the temperature range involved. Most of the liquid-in-glass thermometers used in the engineering spaces are filled with mercury. When a thermometer is exposed to a temperature to be measured, heat causes the liquid in the bulb to expand and rise in the glass stem. Cold, or the absence of heat, causes the liquid to contract and fall.

Liquid-in-glass thermometers are designed so that the face will be in the best positon for reading, when the thermometer is installed. Some thermometers with different angles are shown in figure 9-9.

Mercury-filled thermometers must not be misused or improperly handled because of personnel hazard. Mercury produces a highly toxic vapor which is hazardous if breathed in excessive concentration.

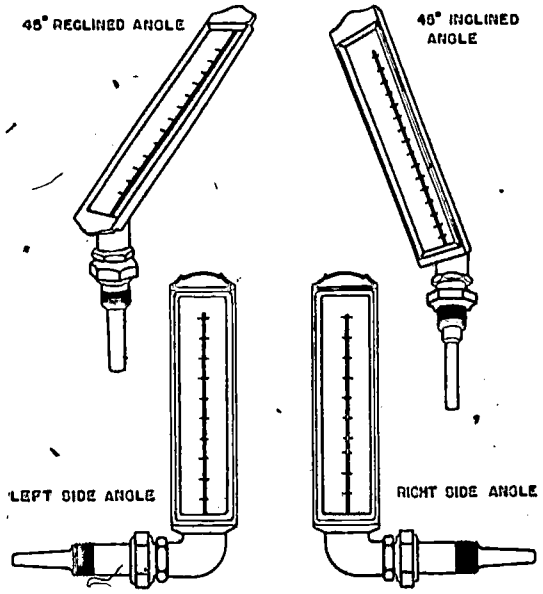

61.26

Figure 9-9.—Thermometers with angle sockets.

BIMETALLIC DIAL THERMOMETERS

Bimetallic dial thermometers use a bimetal element for indicating temperature changes on a circular dial. The bimetallic actuator is a single-helix coil fitted closely to the inside of the stem tube. A rise in temperature causes the actuating element to expand. Beause the element is composed of two thin strips of different metals with each metal having a different rate of expansion, the element expands by unwinding instead of by expanding against the sides of the tube. The pointer shaft is secured to the free end of the element and thus registers the amount of element movement on the dial face. Figure 9-10 shows the actuating element of a bimetallic thermometer.

DISTANT-READING DIAL THERMOMETERS

Distant-reading dial thermometers are used when indicating portions of the instrument must

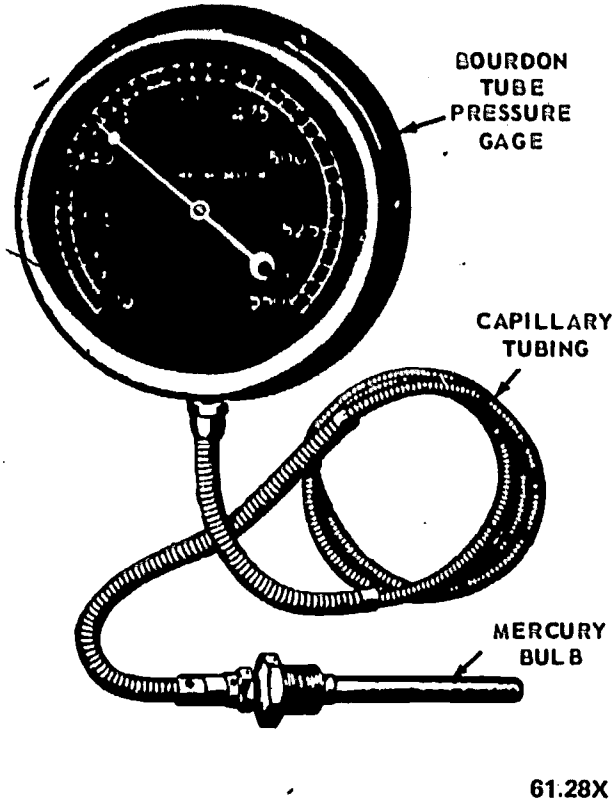

Figure 9-11.—Distant-reading dial thermometer.

be placed at a distance from where the temperature is being measured. The mercury-filled, distant-reading thermometer, shown in figure 9-11, is the most common type used aboard ship. There are other types, but they are not commonly used aboard ship and will not be discussed.

The mercury-filled, distant-reading thermometer (fig. 9-11) consists of a mercury bulb, capillary tubing, and a Bourdon tube pressure gage. The mercury bulb, the capillary tubing, and the Bourdon tube in the pressure gage are all filled with mercury.

The mercury bulb is the sensing element. It is inserted and fastened securely (either threaded or bolted) in an opening in a pipe or turbine pump casing, for instance, where a temperature measurement is desired.

The capillary tubing is constructed similarly to armored electric cable, but instead of having wires or cables inside, the armor contains a small flexible metal tube. The capillary tubing must be handled carefully and must be maintained free of kinks and twists, so that the mercury column within the tubing is not distrupted.

The Bourdon tube pressure gage is the same as we discussed earlier in this chapter. The gage contains a Bourdon tube which has a tendency to straighten out as the pressure in the Bourdon tube increases.

Now, let us put together the three major units of the distant-reading thermometer (mercury bulb, capillary tubing, and the pressure gage) and see what happens. Remember that all three of these units are filled with mercury and that when the temperature rises, the increase causes the mercury in the bulb to expand. The expansion of the mercury in the bulb causes a pressure to be built up in the capillary tubing. This same pressure is transmitted through the capillary tubing into the Bourdon tube in the pressure gage. The Bourdon tube straightens out and, through an assembly of gears and levers, causes a pointer to move around a dial, which has previously been calibrated to show corresponding temperatures. The expansion of the mercury in the bulb results in a movement of the pointer that is directly proportional to the temperature applied to the bulb.

PYROMETERS

Pyrometers are used to measure temperature through a wide range, generally between 300°F and 3,000°F. They are used aboard ship to measure temperatures in heat treatment furnaces, in exhaust temperatures of diesel engines, and for other similar purposes.

The pyrometer includes a thermocouple and a meter. The thermocouple, made of two dissimilar metals joined together at one end, produces an electric current when heat is applied at its joined end. The meter, calibrated in degrees, indicates the temperature at the thermocouple. Figure 9-12 illustrates the operating principle of the thermocouple of the pyrometer.

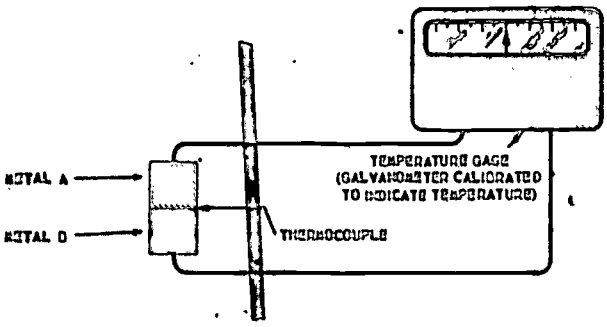

61.34X

Figure 9-12.—Diagrammatic arrangement of a thermocouple.

LIQUID LEVEL INDICATORS

In the engineering plant aboard ship, operating personnel must frequently know the level of various liquids in various locations. The level of the water in the ship's boilers is an example of a liquid level that must be known at all times. Other liquid levels that must be known are the level of the fuel oil in storage tanks and service tanks, the level of the water in the deaerating feed tank, and the level of the lubricating oil in the oil sumps and reservoirs of pumps and other auxiliary machinery.

Liquid level indicators, other than sounding rods and tapes, are constructed in a variety of designs and sizes; some are simple and some are relatively complex. Some indicators measure liquid level directly by measuring the height of a column of liquid.

TANK GAGING SYSTEM

One of the most common liquid level indicators is the static head gaging system, shown in figure 9-13. This type indicator is generally used to measure the liquid level in fuel oil storage tanks aboard ship. This system uses a mercury manometer to balance a head of liquid in the tank against the column of liquid in the manometer. The balance chamber is located so that its orifice (opening) is near the bottom of the tank. A line connects the top of the balance chamber to the mercury-filled bulb of the indicator gage, and another line connects the space above the mercury column to the top of the tank. Since the height of the liquid in the tank has a definite relationship to the pressure exerted by the liquid, the scale can be calibrated to show the height (or liquid level). When the height of the liquid in the tank is known, the measurement of height can be readily converted to volume (gallons).

GAGE GLASSES

The gage glass is one of the simplest kinds of liquid level indicators. Gage glasses are used on boilers, on deaerating feed tanks, on inspection tanks, and on other shipboard machinery. Gage glasses vary in design and construction depending upon pressure or other service conditions.

The liquid level in the gage glass is the same as the liquid level in the container, and the liquid level can be determined by visual

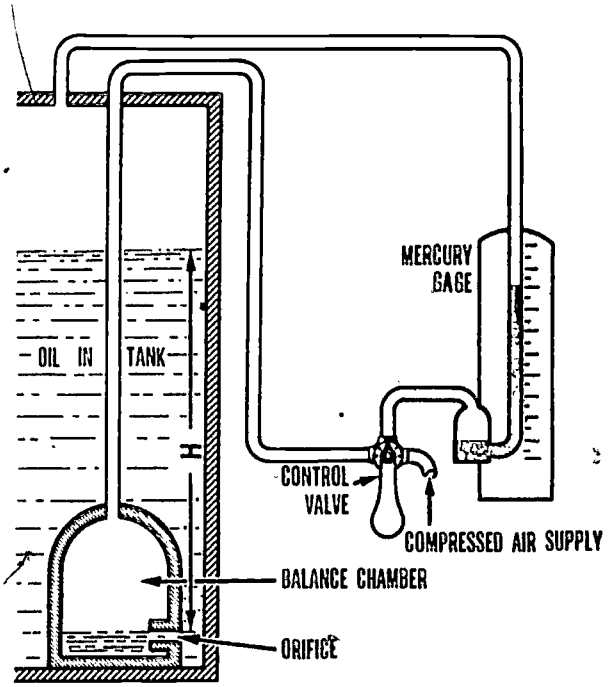

61.5X

Figure 9-13.—Static head gaging system.

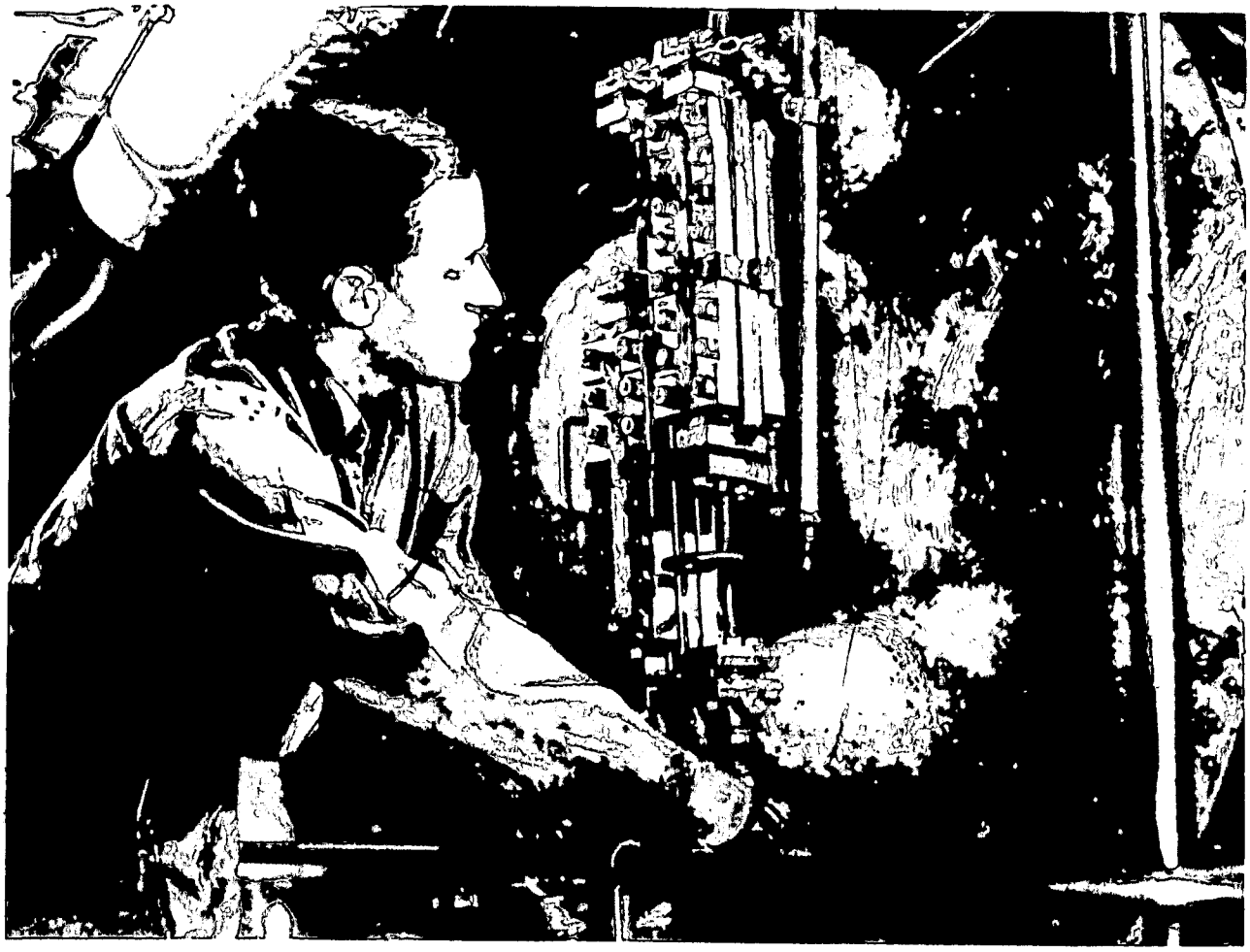

139.32

Figure 9-14.—Boiler gage glass installed on a boiler.

observation. A typical boiler gage glass installed on a boiler is shown in figure 9-14.

In addition to the gage glasses, some boilers are equipped with remote water level indicators. The remote water level indicators are generally installed on the operating level of the boilers to provide the petty officer in charge with a readily obtainable reading of the water level in the steam drum of the boilers. Figure 9-15 illustrates one type of remote water level indicator.

FLUID METERS

Fluid meters are used aboard ship to measure flow rate of fuel oil, diesel oil, water, gasoline, and other liquids. You cannot get an accurate measurement of the rate of flow of a liquid through a meter unless the recorded amount is read correctly. Some different types of dials used on fluid meters are shown in figures 9-16 and 9-17. The dial readings are generally in U.S. gallons unless otherwise specified on the dial face. The dial faces shown in figure 9-16 are for the straight-reading type meter; the dial faces shown in figure 9-17 are for a round reading meter.

To read the stright-reading meter, read from left to right and add the number indicated by the smaller pointer above. For example, in part

A of figure 9-16 the reading is 0000280. Part B shows the reading to be 0000285. As the pointer turns, so does the right-hand, numbered roller. Even though the next higher number is partly exposed always read the lesser number, which is the number disappearing from sight. When the small pointer is at 0 all the numbers in the straight-reading dial will be centrally aligned, as shown in part A and part G of figure 9-16. When the small pointer is at 8 or 9 (part C of fig. 9-16), the next larger number on the numbered roller is almost completely exposed, but the lesser number must be read. The dial in part C of figure 9-16 reads 288 gallons, not 298 gallons.

To read the round-reading dial face (fig. 9-17) take the lesser number of the two between which the hand points in each circle. Notice that each circle indicates tens, hundreds, thousands, tens of thousands, etc. Place the number taken from the circle marked "tens" in the units position, place the number taken from the circle marked "hundreds" in the tens place; and

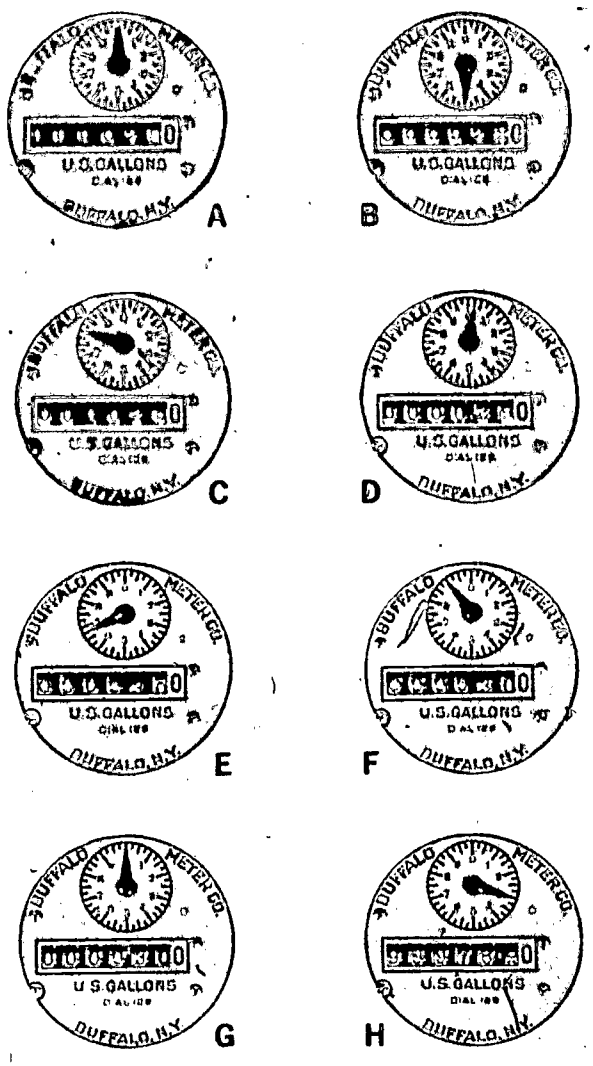

61.13.1X

Figure 9-16.—Straight reading registers.

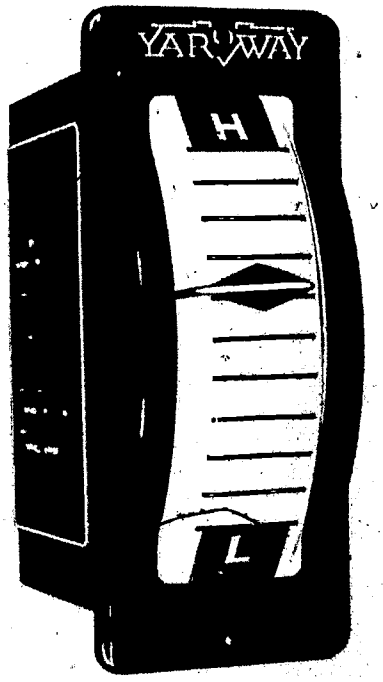

139.33

Figure 9-15.—Remote water level indicator.

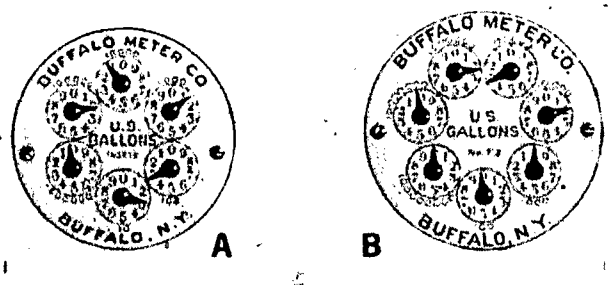

61.13.2X

Figure 9-17.—Round reading registers.

continue similarly for the remaining circles. Each division of any circle stands for one-tenth of the whole number indicated by that circle. If a hand is on or near a number, read that number instead of the next lower number when the hand in the next lower circle is on or past 0.

REVOLUTION COUNTERS AND INDICATORS

Measurements of rotational speed are necessary for the operation of the pumps, forced draft blowers, main engines, and other machinery or equipment of the engineering plant. As a result, various instruments are used to indicate the shaft speed or to count the number of turns a shaft makes. One type of instrument, the revolution counter, which is mounted on the throttleboard in the engineroom, counts the total number of turns that are made by a main propulsion shaft. These counters are similar to the speedometer of an automobile. A typical revolution counter is shown in figure 9-18.

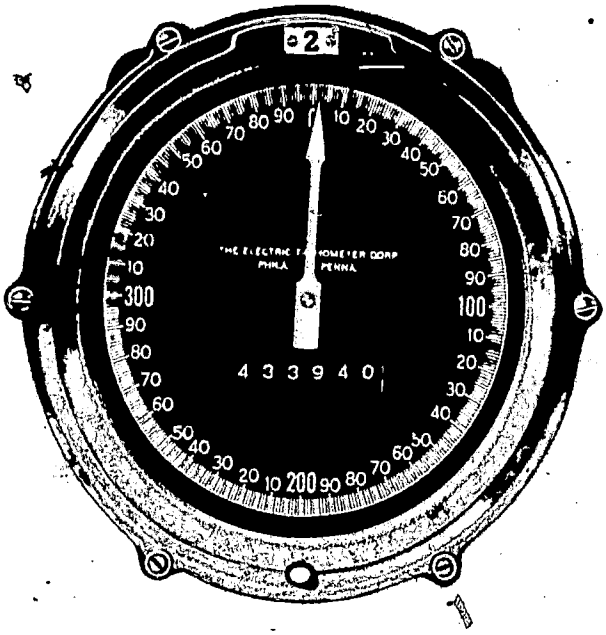

7.143

Figure 9-18.—Revolution counter.

The most common instrument used in the engineering plant aboard ship to measure rotational speed is the tachometer. For most shipboard machinery, rotational speed is expressed in revolutions per minute (rpm). The tachometers generally used aboard ship are of three main types: centrifugal, chronometric, and resonant.

The CENTRIFUGAL tachometer may be either portable (single and multiple range) or permanently mounted. The portable multirange tachometer has three ranges: low (50 to 500 rpm), medium (500 to 5,000 rpm), and high (5,000 to 50,000 rpm). Do not shift from one range to another while the portable centrifugal tachometer is in use.

Normally, permanently mounted centrifugal tachometers operate off the governor or speed-limiting assembly. The tachometer continuously records the actual rotational speed of the machinery shaft. A permanently mounted centrifugal tachometer is illustrated in figure 9-19.

The portable centrifugal tachometer is operated manually. A small shaft which protrudes from the tachometer case is applied manually to a depression or projection on the end of a rotating shaft of a pump, motor, or other machinery. The centrifugal or rotating movement of the machinery shaft is converted to instantaneous values of speed on the dial face of the tachometer. Figure 9-20 shows a portable multirange centrifugal tachometer.

The portable CHRONOMETRIC tachometer, shown in figure 9-21, is a combination watch and revolution counter. It measures the average number of revolutions per minute of a motor shaft, pump shaft, etc. This tachometer has an outer drive shaft which runs free when applied to a rotating shaft, until a starting button is depressed to start the timing element. Note the starting button beneath the index finger in figure 9-21. The chronometric tachometer retains readings on its dial after its drive shaft has been disengaged from a rotating shaft, until the pointers are returned to zero by the reset button (usually the starting button).

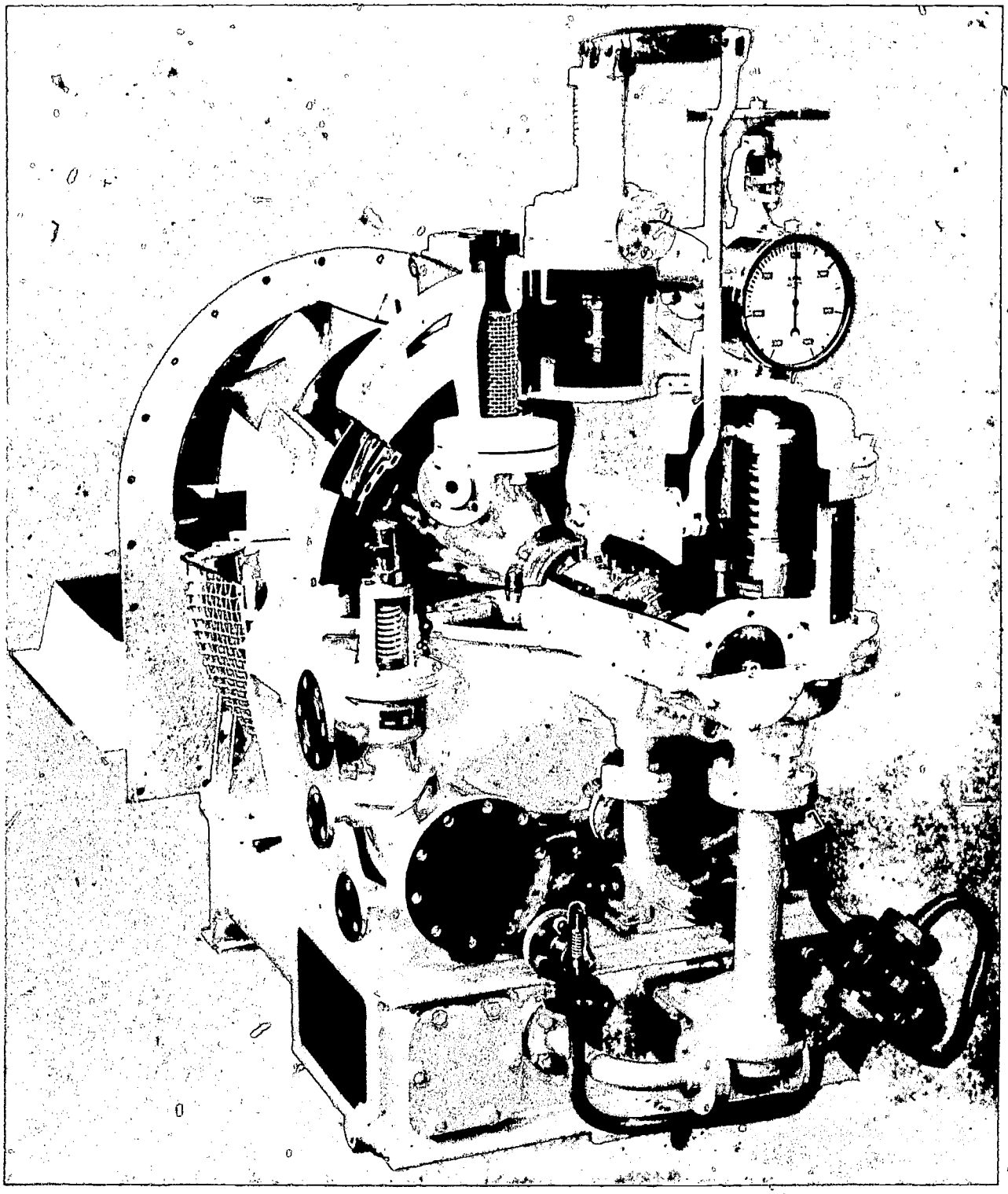

38.111X

Figure 9-19.—Permanently mounted centrifugal type tachometer on a forced draft blower.

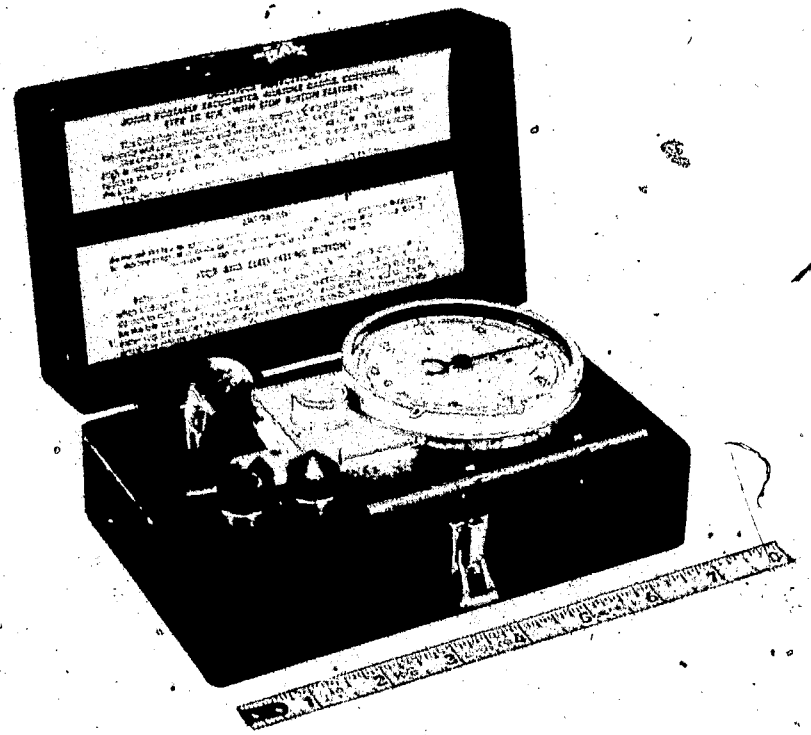

61.17X

Figure 9-20.—Multirange centrifugal tachometer.

2.66X

Figure 9-21.—Portable chronometric tachometer.

The range of a chronometric tachometer is usually from 0 to 10,000 rpm and from 0 to 3,000 feet per minute (fpm).

Each portable centrifugal or chronometric tachometer has a small rubber covered wheel and a number of hard rubber tips. The appropriate tip or wheel is fitted on the end of the tachometer drive shaft and held against the shaft to be measured. Portable tachometers of the centrifugal or chronometric type are used for intermittent readings only, and are not used for continuous operation.

The RESONANT REED tachometer, illustrated in figure 9-22, is particularly useful for measuring high rotational speeds such as those that occur in turbines and generators. This type tachometer is particularly suitable when it is practically impossible to reach the moving ends of the machinery shafts. This instrument gives continuous readings and is capable of making rapid, instantaneous adjustments to rotational speed.

Resonance is the quality of an elastic body which causes it to vibrate vigorously when subjected to small, rhythmic impluses at a rate equal to, or near, its natural frequency. In a resonant reed tachometer, resonance provides a simple but accurate means to measure speed and rate of vibration.

A resonant reed tachometer consists of a set of consecutively tuned steel reeds mounted in a case with a scale to indicate rpm of the shaft and vibrations per minute (vpm) of the reeds. This tachometer has no pointer—only a set of accurately tuned reeds—and it operates without direct contact with a moving part under test. It has no gears or couplings, and it requires no oiling and practically no maintenance.

OTHER ENGINEERING INSTRUMENTS

There are a great number of additional instruments and indicators used in the engineering plant. This section will acquaint you with those additonal instruments which you most likely will be seeing or working with in the engineering department. These additional instruments include superheater temperature alarms, superheater steam flow indicators, smoke indicators, salinity indicators, lube oil pressure alarms, engine order telegraph, and many others.

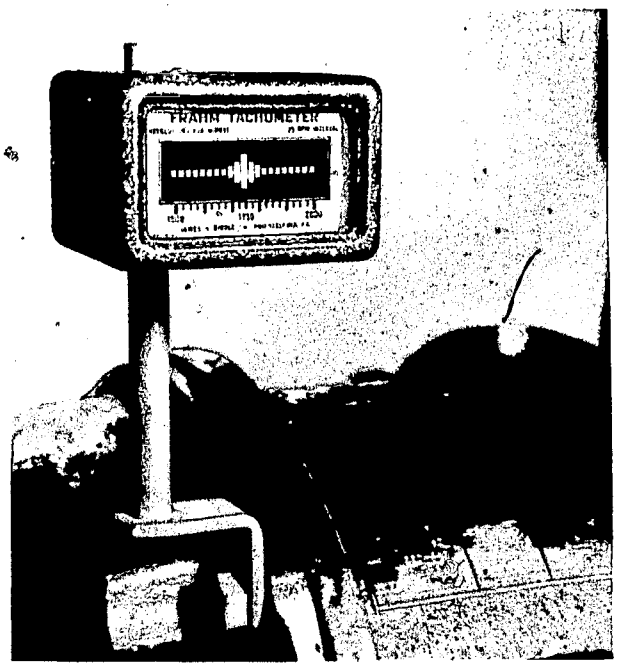

61.16X

Figure 9-22.—Mounted resonant reed tachometer.

SUPERHEATER TEMPERATURE ALARMS

Superheater temperature alarms are installed on most boilers to warn operating personnel of dangerously high temperatures in the superheater of the boilers. Some superheater temperature alarms operate similarly to the Bourdon tube pressure gage. As heat is applied, the mercury in the spiral-wound Bourdon tube expands, causing the Bourdon tube to move a cantilever arm toward an electric microswitch. As the preset alarm temperature is reached, the cantilever arm engages the microswitch, setting off a warning howl or buzzer. The warning signal continues until the superheater temperature has been lowered to approximately 10° or 15°F below the preset alarm temperature. The signal or alarm stops because the mercury in the Bourdon tube contracts, moving the Bourdon tube, which in turn causes the cantilever arm to move away from the microswitch, shutting off the alarm. A diagrammatic arrangement of one type of superheater alarm is shown in figure 9-23.

STEAM FLOW INDICATOR

Steam flow indicators show the rate of flow of steam through the superheater of

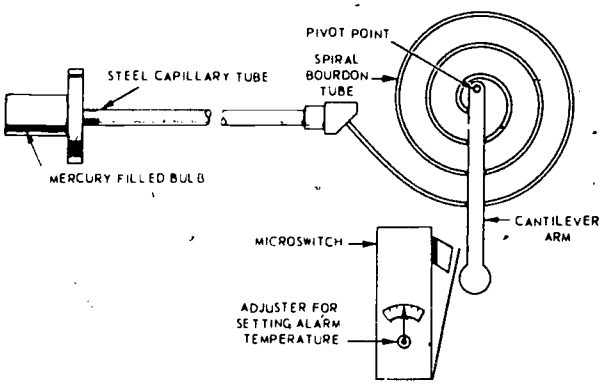

61.31X

Figure 9-23.—Superheater temperature alarm.

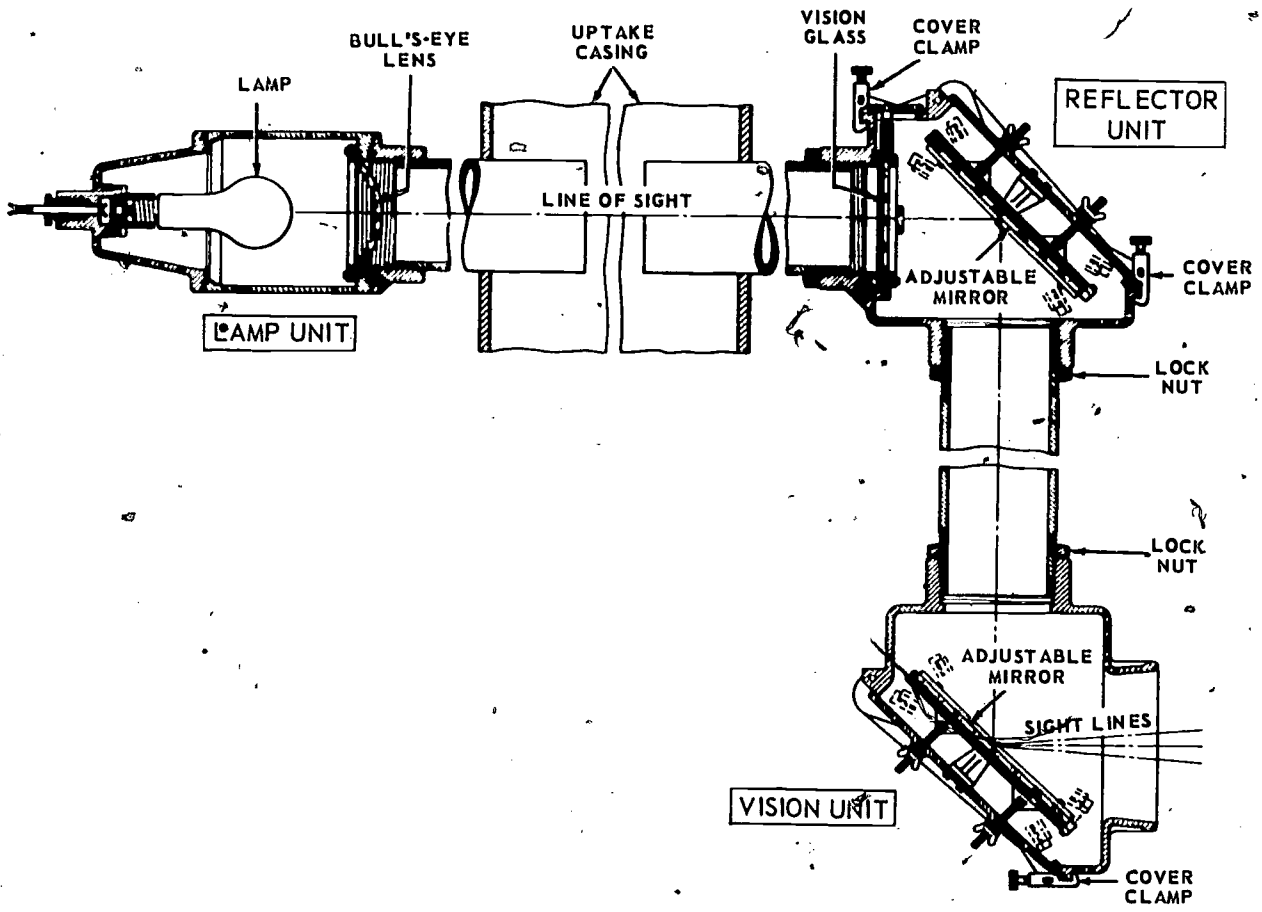

38.60

Figure 9-24.—Smoke indicator.

double-furnace boilers. Before fires are lighted in the superheated side of double-furnace boilers, the operator must ensure that a sufficient flow of steam is passing through the superheater. The flow of steam is necessary to carry off the heat of combustion in the superheated side of double-furnace boilers in order to prevent overheating of the superheater tubes, drums, and headers.

The steam flow indicator is calibrated in inches and is normally set at 2 inches as the minimum low. In other words, fires should not be lighted in the superheated side of double-furnace boilers until the pointer on the steam flow indicator has reached the 2-inch mark, which is an indication of sufficient flow of steam.

SMOKE INDICATOR

Smoke indicators (periscope type) provide the boiler operator with visual indications of conditions in the stack above the furnace area. A smoke indicator is shown in figure 9-24.

SALINITY INDICATOR

Electrical salinity indicating cells (fig. 9-25) are installed throughout distilling plants to maintain a constant check on the distilled water. An electrical salinity indicator consists of a number of salinity cells in various locations in the plant; for example, in the evaporators, condensate pump discharge, and the air-ejector

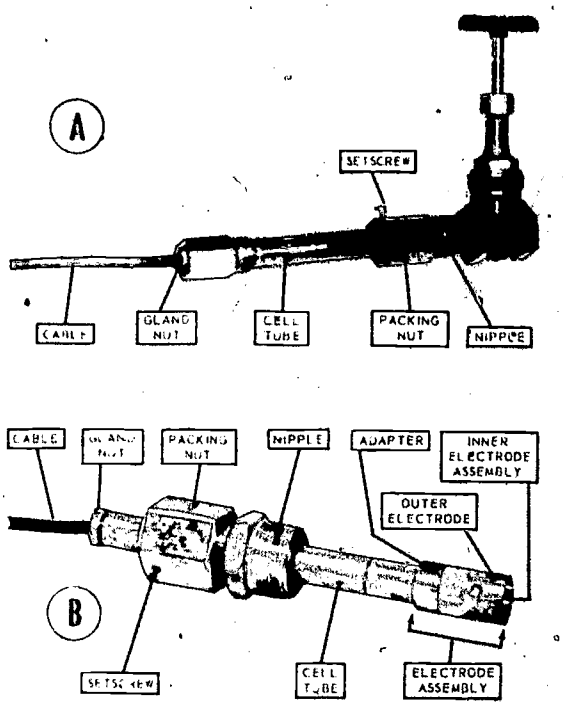

7.150

Figure 9-25.—Salinity cell and valve assembly.

condenser drain. These salinity cells are all connected to a salinity indicator panel.

Since the electrical resistance of a solution varies according to the amount of ionized salts in solution, it is possible to measure salinity by measuring the electrical resistance. The salinity indicator panel is equipped with a meter calibrated to read directly either in equivalents per million (epm) or in grains per gallon (gpg). The newer type salinity indicators are calibrated in epm.

LUBE OIL PRESSURE ALARM

Lube oil pressure alarms are installed on all generators and main propulsion engines to signal when the lube oil pressure to the bearings is dangerously low. Low lube oil pressure can cause a number of casualties that will impair the operating condition of the machinery involved. The lube oil pressure, which is either a rapidly ringing bell or loud siren, receives its signal from the bearing that is the most remote from the lube oil pump. When the alarm is sounded, the affected machinery must be stopped immediately, the cause determined, and corrective measures taken.

ENGINE ORDER TELEGRAPH

The engine order telegraph (speed indicator), shown in figure 9-26, relays the speed requested by the officer of the deck while underway to the throttleman in the engineroom. The engine order telegraph is generally mounted on the throttleboard adjacent to the throttle valves, so that it is readily visible to the throttleman. The following table lists speed changes which may be indicated via the engine order telegraph.

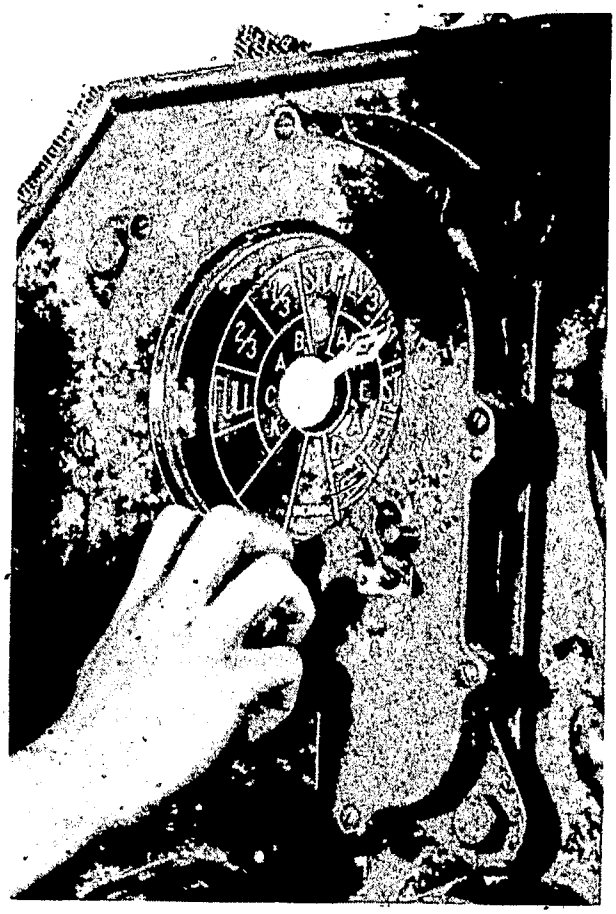

7.116

Figure 9-26.—Engine order telegraph.

Ahead	Stop	Astern
1/3		1/3
2/3		2/3
I – Standard		Full
II – Full		
III – Flank		

The wrong direction alarm is connected to the engine order telegraph and the main engine throttle valves. If the engine order telegraph indicates "ahead" and the throttleman attempts to open the astern throttle valve, a loud signal or alarm is sounded.

CHAPTER 10

PUMPS, VALVES, AND PIPING

As a Fireman, you should have a general knowledge of the basic operating principles of the various types of pumps used by the Navy. Pumps are used to move any substance which flows or which can be made to flow. When thinking of the term pumping, you probably think of moving water, oil, air, steam, and other common liquids and gases. Substances such as molten metal, sludge, and mud are also fluids and can be pumped with specially designed pumps.

A pump is a device which uses an external source of power to apply a force to a fluid in order to move the fluid from one place to another. A pump transforms energy from the external source (such as an electric motor or steam turbine) into mechanical kinetic energy, which is revealed by the motion of the fluid. This kinetic energy is then used to do work, such as: to raise a liquid from one level to another, as when lifting water from a well; to transport a liquid through a pipe, as in an oil pipeline; to move a liquid against some resistance as when filling a boiler under pressure; or to force a liquid through a hydraulic system against various resistances.

Aboard ship, pumps are used for a number of essential services. Pumps supply water to the boilers, draw condensate from the condensers, supply sea water to the firemain, circulate cooling water for coolers and condensers, pump out bilges, transfer fuel oil, supply sea water to the distilling plants, and serve many other purposes. The operation of the ship's propulsion plant and of almost all the auxiliary machinery depends on the proper operation of pumps. Pump failure may cause failure of an entire power plant, although most plants have two pumps—a main pump and a standby pump.

If a system has a pump, it must also contain devices for controlling the volume of flow, the direction of flow, or the operating pressure of the system. A device that performs one or more of these control functions is called a VALVE.

In addition to pumps and valves, in this chapter we shall discuss piping which is a vital part of the ship's engineering plant.

PUMPS

Pumps are classified by their design and operational features. Pumps are further classified by the type of movement that causes the pumping action (reciprocating, rotary, centrifugal, propeller, or jet pumps). Pumps are also classified by the rate of speed, the rate of discharge, and the method of priming. Some pumps run at variable speed; others at constant speed. Some pumps have a variable capacity; others discharge at a constant rate. Some pumps are self-priming; others require a positive pressure on the suction (intake) side before they can begin to move a liquid.

Regardless of classification, a pump must have a POWER END and a FLUID END. The power end may be a steam turbine, a reciprocating steam engine, a steam jet, or an electric motor. In steam-driven pumps, the power end is often called the STEAM END. The fluid end is generally called the PUMP END; but it may be called the LIQUID END, the WATER END, the OIL END, or the GAS END, to indicate the nature of the fluid substance being pumped.

Pumps can be divided into groups according to the principles on which they operate. Most pumps fall into five main types: reciprocating,

rotary, centrifugal, propeller, and jet. Each type of pump is especially suited for some particular kind of work.

RECIPROCATING PUMPS

The hand water pump commonly used on farms is a good example of the reciprocating pump. The reciprocating pump derives its name from the back and forth or up and down movement of the piston or plunger inside a cylinder. These pumps are used on modern ships as emergency feedwater pumps and as emergency fire and bilge pumps. Reciprocating pumps are used for emergency purposes because they are easy to operate and can be started safely by relatively inexperienced personnel. These pumps are also reliable for starting under cold conditions.

A single-acting pump is one which takes a suction on one stroke only, known as the suction stroke. On the return stroke—called the discharge stroke—the liquid is forced out of the cylinder. Figure 10-1A illustrates the operating principle of a single-acting reciprocating pump.

The principal parts of a single-acting reciprocating pump are a cylinder, a piston, and a valve system. The piston fits snugly in the cylinder and is moved up and down in the cylinder by the pump shaft. Most of these pumps are steam-driven. The pump shaft is a continuation of the piston rod of the steam cylinder.

On the down stroke, the valves in the bottom of the cylinder are closed and the water in the lower part of the cylinder is forced up through the valves in the piston. On the up stroke, the weight of the water above the piston closes the piston valves. As the piston moves upward, it draws the water from the suction line into the cylinder through the cylinder valves. The water above the piston leaves the pump through an outlet line or a spout.

The double-acting pump shown in figure 10-1B delivers a steady stream of water under high pressure. Double-acting pumps are also steam-driven. The pump is connected directly to the piston rod of the steam cylinder. These pumps have the same general parts and operate on the same general principle as the single-acting

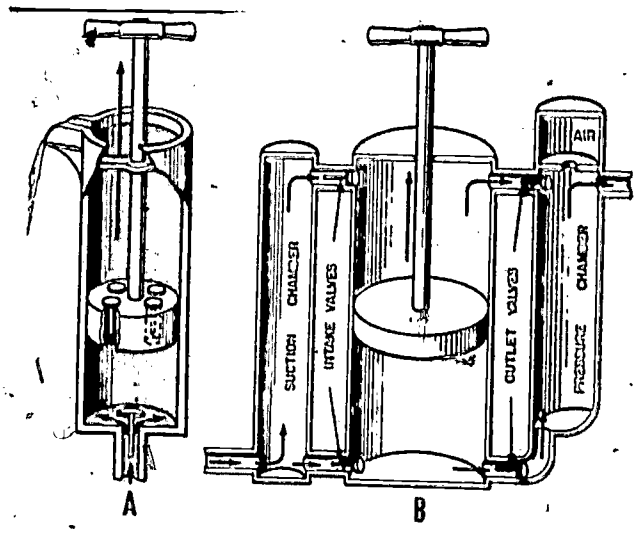

139.34

Figure 10-1.—Operating principle of two types of reciprocating pumps.

type except that the valve system is arranged differently, and an air chamber is added to maintain the pressure when the piston is at the top and bottom of each stroke.

A stream of water is forced out of the double-acting pump on both the up and the down strokes. On the up stroke, the water above the piston is forced out through the upper outlet valve. At the same time, water is being drawn into the space below the piston through the lower inlet valve. On the down stroke, the water below the piston is forced out of (discharged from) the cylinder through the lower outlet valve and a new charge of water is drawn into the top of the cylinder through the upper inlet valve.

Reciprocating pumps are often called POSITIVE DISPLACEMENT pumps—that is, each discharge stroke displaces a definite amount of liquid, regardless of the resistance against which the pump is operating. A relief valve must be installed in the discharge line to relieve any excess pressure.

The operation of the reciprocating pump generally depends on a valve system which directs the steam first into one end of the

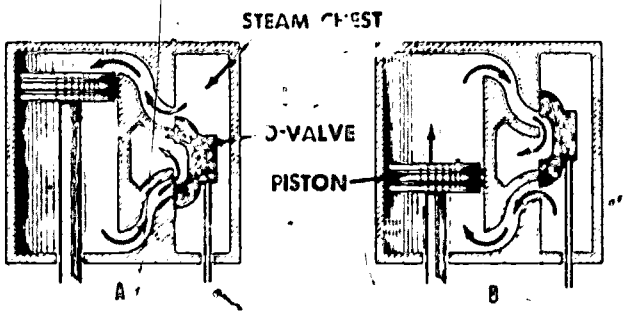

139.35

Figure 10-2.—Operating principle of D-shaped slide valve of a reciprocating pump.

cylinder and then into the other end. The steam is allowed to escape from the cylinder after it has served its purpose. Steam to and from the cylinder passes through two ports (openings), one in each end of the cylinder. This arrangement is quite similar to the manner in which the water passes through the double-acting water pump described previously.

One valve design consists of a D-SHAPED SLIDE VALVE (D-valve) that is actuated by a linkage attached to the piston rod. (See fig. 10-2.) The steam chest which is attached to the cylinder is connected through a stop valve to the auxiliary steam line. When the piston reaches the top of its stroke, the valve-operating mechanism moves the valve down to the position shown in figure 10-2A. The port connecting the steam chest to the space at the top of the cylinder is uncovered. Steam from the chest flows through this port, exerts a pressure on the top of the piston, and forces it downward.

At the same time, the space below the piston is connected with the exhaust port through a recess in the back of the valve. As the piston moves downward, the steam that fills this space is forced out through the exhaust port.

As the piston nears the bottom of its stroke, the valve mechanism moves the D-valve to the position shown in figure 10-2B. This movement uncovers the lower port. Steam from the chest now flows into the lower part of the cylinder and pushes the piston upward. The upper

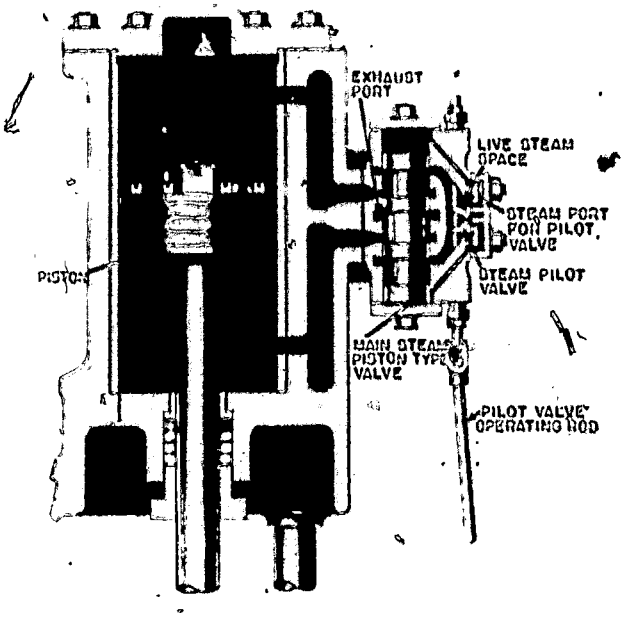

30.99

Figure 10-3.—Piston-type valve gear for steam end of reciprocating pump.

cylinder port is connected to the exhaust port through the back of the valve. As the piston rises, it pushes the exhaust steam out at the top of the cylinder through the exhaust port.

Figure 10-3 shows the piston valve gear commonly used aboard ship. It performs the same function as the D-valve, but the movement of the valve is controlled by the difference in the steam pressure between the inlet and the outlet. The piston valve gear consists of a main piston-type slide valve and a pilot slide valve. Since the rod from the pilot valve is connected to the pump rod by a valve-operating assembly, the position of the pilot valve is controlled by the position of the piston in the steam cylinder. The pilot valve furnishes actuating steam to the main piston valve; this in turn admits steam to the top or to the bottom of the steam cylinder at the proper time.

Regardless of the type of valve used, the continued operation of the pump consists of feeding steam into one end of the cylinder and exhausting it from the other end. The direction

of steam flow (in and out of the cylinder ports) is reversed at the end of each stroke of the piston.

Starting a reciprocating pump is quite simple. First, open the proper valves in the suction and discharge lines before starting the pump. Next, open the exhaust valve and the cylinder drains. Then open the throttle valve slightly, or "crack" it to feed enough steam into the cylinder to warm it. Adjust the throttle to operate the pump at a slow speed until live steam begins to come out of the drains. Now close the drains and adjust the throttle to operate the pump at the desired speed.

When securing a reciprocating pump, close the throttle first, and then close the exhaust valve. Next open the cylinder drains and close the valves in the suction and discharge lines. After the steam cylinder has drained, close the drain valves.

Variable Stroke Pumps

Aboard ship, variable stroke pumps (positive displacement) are used largely on electrohydraulic steering gear, elevators, cranes, and anchor windlasses. In these applications, the variable stroke pump is referred to as the A-end of the drive system and the hydraulic motor which is driven by the A-end is referred to as the B-end. By controlling the pumping action of the A-end, you can run the motor (B-end) in either direction and vary the speed from zero to the maximum rate. On some naval ships, variable stroke pumps are also used as in-port and cruising fuel oil service pumps.

Although variable stroke pumps are often classified as rotary pumps, they are actually reciprocating pumps. They operate on a principle similar to that of a single-acting reciprocating pump. A rotary motion is imparted to a cylinder barrel or cylinder block in the pump by means of a constant-speed electric motor, but the actual pumping is done by a set of pistons reciprocating inside a set of cylinders.

Let us discuss the way that the rotary motion is changed to reciprocating motion.

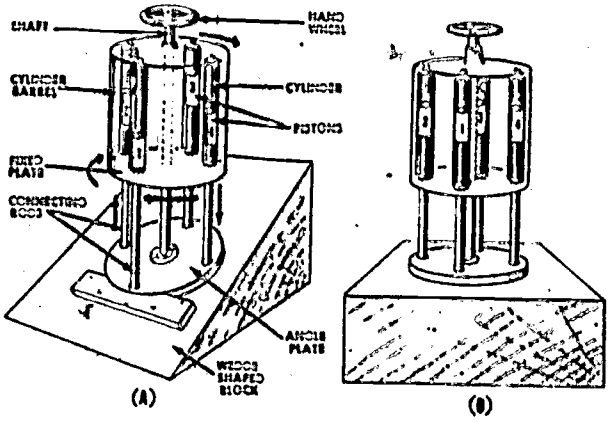

139.37

Figure 10-4.—Operating principle of a Waterbury variable-volume pump.

Figure 10-4 illustrates the operating principle of a Waterbury variable-volume pump. This pump is used as a variable-speed power transmission in the steering gear and the gun-training mechanism aboard ship. It is also used in those systems where it is necessary to control the pump output within very narrow limits.

In the Waterbury pump the pumping is done by a set of pistons which move back and forth within close-fitting cylinders. The oil enters and leaves the cylinders through ports or passages in the cylinder heads. The pistons are operated by the cam action of a tilting plate. This method of changing rotary motion to reciprocating (back and forth) motion is demonstrated by the device shown in figure 10-4.

This demonstrator consists of a cylinder barrel and a tilting plate attached to a shaft, as illustrated in figure 10-4A. The tilting plate is fastened to the shaft by a universal joint which permits it to tilt in any direction. The connecting rods (piston rods) rest in sockets in the tilting plate and are attached to pistons which slide up and down in the cylinders. When the handwheel is turned the complete assembly turns with it.

When you place the demonstrator on a sloping surface the tilting plate will tip or tilt and assume the same angle as the block. The pistons on the low side will be drawn down in

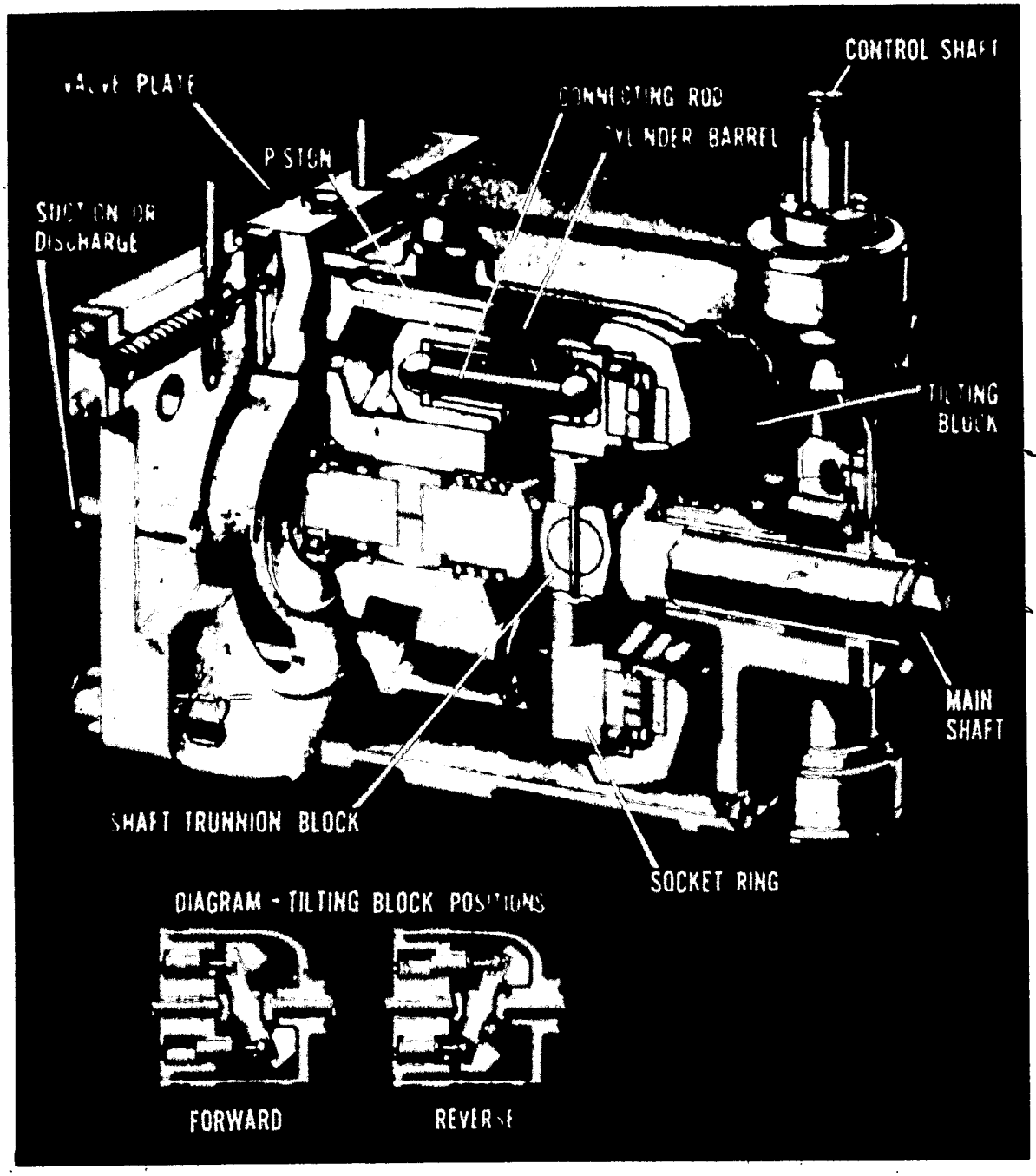

38.103

Figure 10-5.—Variable stroke axial piston pump.

the cylinders, and those on the high side will be pushed up. In figure 10-4A the number 1 piston is in the lowest position; number 3 is in the highest.

Now turn the handwheel to the right, and see what happens. As the far side of the tilting plate moves up along the surface of the block, the connecting rods and pistons on that side will be raised. The near side of the plate will be moving down along the block surface and the pistons on this side will move down in the cylinders. The operation is continuous. Each piston moves up during half of each revolution around the shaft, and moves down during the other half.

The stroke of the pistons (the distance that they move up and down during each revolution of the shaft) depends on the slope or tilt of the tilting plate. In figure 10-4B the demonstrator is resting on a level surface, and the tilting plate is parallel to the bottom of the cylinder barrel. When you turn the handwheel now, the tilting plate will not move up and down, and the pistons will remain in the same position in the cylinders.

So far, the demonstrator has been used to show that the pistons will move up and down in the cylinders when the shaft is turned with the angle plate tilted. The device can be converted into an oil pump by adding an adjustable tilting box to control the tilt of the tilting plate and by placing a valve plate on top of the cylinder barrel. The valve plate has two elongated ports which allow the oil to flow into the cylinders on one side of the pump and out on the other side. When the tilt of the tilting plate is increased, the stroke of the pistons is increased and more oil passes through the pump. Tilting the tilting plate in the opposite direction reverses the direction of the oil flow.

The variable stroke axial piston pump (fig. 10-5) has the same principal parts as the demonstrator just described in figure 10-4. The moving parts are enclosed in a pump case that is kept filled with oil. These pumps are mounted in a horizontal position and are usually driven by an electric motor.

ROTARY PUMPS

All rotary pumps work by means of rotating parts which trap the liquid at the suction side of the pump casing and force it through the discharge outlet. Gears, screws, lobes, and vanes are commonly used as the rotating elements in rotary pumps.

Rotary pumps (positive displacement) are most useful for pumping oil and other heavy viscous liquids. They are also used for nonviscous liquids, such as water or gasoline, where the pumping problem involves a high suction lift. Rotary pumps are used for fuel oil service, fuel oil transfer, and lubricating oil service. These pumps are self-priming, because they are able to remove air from the suction lines and produce a high suction lift (or a satisfactory vacuum).

The simple GEAR PUMP, shown in figure 10-6 is frequently used in the lubricating systems of fuel oil and water pumps, forced draft blowers and other auxiliary machinery. This type of pump has two spur gears which mesh together and rotate in opposite directions; one is the driving gear and the other is the driven gear. The driving gear is attached to the shaft of the electric motor or steam turbine that drives the pump; the driven gear is in mesh with the driving gear and is driven by it. The gears must fit very closely within the case so that the liquid will not leak back to the suction side of the pump. The parts are lubricated by the liquid being pumped.

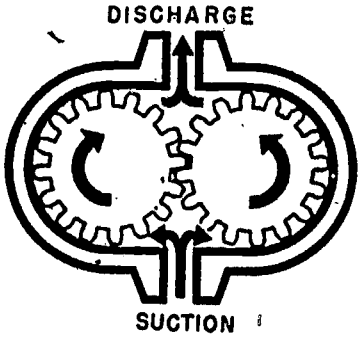

38.108

Figure 10-6.—Action of simple gear pump.

At first glance, you might think that the liquid passes between the two gears. This is not true. As the gears rotate, the liquid is trapped in the spaces between the gear teeth and the pump case and is carried around to the discharge side of the pump. As the teeth come in mesh, the liquid is squeezed out of these spaces and is kept from returning to the suction side of the pump. Pressure is built up and forces the liquid out of the pump into the discharge line.

There are several variations of the simple gear pump. One kind has herringbone teeth (fig. 10-7) which make little noise and maintain an even pressure. Another kind has three lobes on each gear instead of teeth. Lobe pumps and some helical pumps have timing gears which rotate the pump parts. All of these pumps operate on the same principle as the simple gear pump just described.

SCREW PUMPS represent still another type of positive displacement rotary pump. In the screw pump, the liquid is trapped and forced through the pump by the action of rotating screws. Screw pumps have few moving parts and no valves to get out of order. They are widely used aboard ships as fuel oil and lubricating oil service pumps. They may have two or three screws and are divided into high pitch and low pitch types.

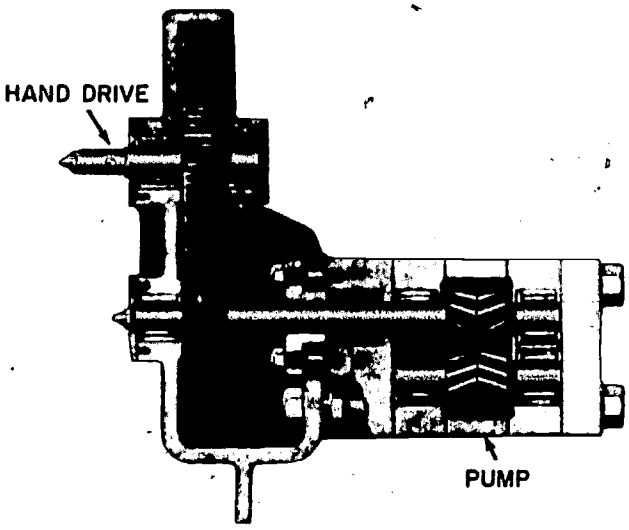

38.104

Figure 10-7.—Herringbone gear pump.

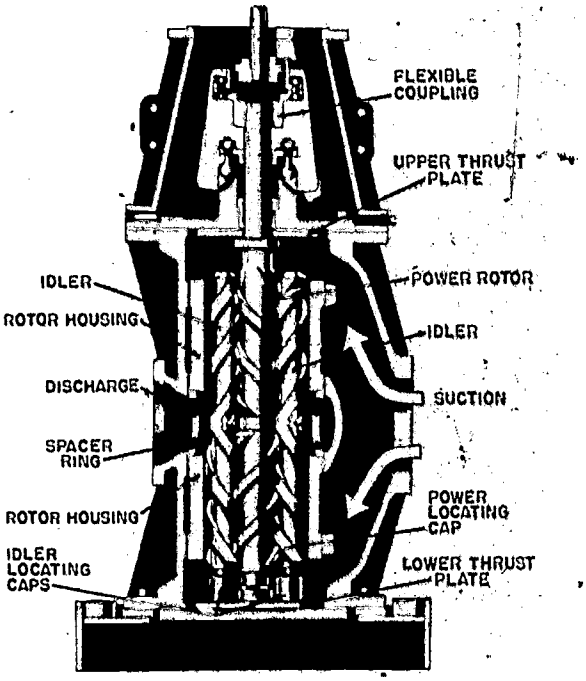

47.80

Figure 10-8.—Cutaway view of triple screw, high pitch pump.

The triple screw pump (high-pitch) illustrated in figure 10-8 has three screws or rotors which revolve within a close-fitting housing. The power rotor in the center is in mesh with (and drives) the two idling rotors (idlers).

The suction line is connected to the pump intake, which in turn opens into the chambers at the ends of the rotors. As the rotor turns, the liquid flows in between the threads at the outer end of each pair of screws. At the end of the first turn, a spiral-shaped slug of the liquid is trapped when the ends of the threads come in mesh again. The threads carry the liquid along within the housing toward the center of the pump and to the discharge opening.

CENTRIFUGAL PUMPS

Centrifugal pumps are used in the feed, fresh water, and fire main systems of the engineering

plant. There are many types of centrifugal pumps (feedwater booster, condensate, and fire), but all operate on the same principle. Centrifugal pumps can handle large quantities of a liquid and deliver it at a high pressure. These pumps may be driven by a steam turbine, an electric motor, or a diesel engine. They do not operate on the positive displacement principle, but depend on centrifugal force to move the liquids through the pump and to maintain the desired pressure. (See fig. 10-9.)

When a body revolves in a curved path, it exerts a "centrifugal force" upon the arm, lever, casing, or whatever means is used to restrain it from moving in a straight (tangential) line. For example, centrifugal force is the force that holds the water in a pail when you swing it in a circle over your head. If there happens to be a hole in the bottom of the pail, the water will squirt out, even when the pail is upside down.

The simple centrifugal pump shown in figure 10-9 has only one main moving part. A wheel called an impeller is connected to the drive shaft and rotates within the pump casing. The casing has the same spiral shape as the snail's shell. The water enters the pump through the inlet pipe, which empties into the center of the casing. The location of the outlet passage corresponds to the opening in the snail's shell through which the snail emerges.

The suction connection is so designed that the liquid is guided from the suction chamber of the casing to the center or "eye" of the impeller. As the impeller rotates, it carries the water around with it. The centrifugal force resulting from this rotation pushes the water away from the center and holds it against the inside of the pump casing. As the water flows along the inside of the spiral-shaped casing, it is diverted through the outlet opening and passes into the discharge line.

Centrifugal pumps are not self-priming: they should NEVER be run while empty. The impeller fits very closely into the sides of the casing and depends on the liquid being pumped to supply the necessary coolant. This type of pump is usually installed below the level of the tank from which suction is to be taken. When the intake valve is opened the liquid flows into the pump and primes it. The vent cock should be opened until all air is purged from the pump casing.

A single-impeller pump will maintain pressures up to 150 psi. Where higher pressures are required the pump is designed with from two to six impellers. The pressure is raised by successive stages. The outlet from the first impeller is connected to the inlet of the second impeller and so on through all the stages.

PROPELLER PUMPS

Propeller pumps ary used on some ships as circulating water pumps. (See fig. 10-10.) Propeller pumps closely resemble centrifugal pumps in design and operation but do not use centrifugal force for their operation.

Propeller pumps are used on some ships as circulating pumps (fig. 10-10).

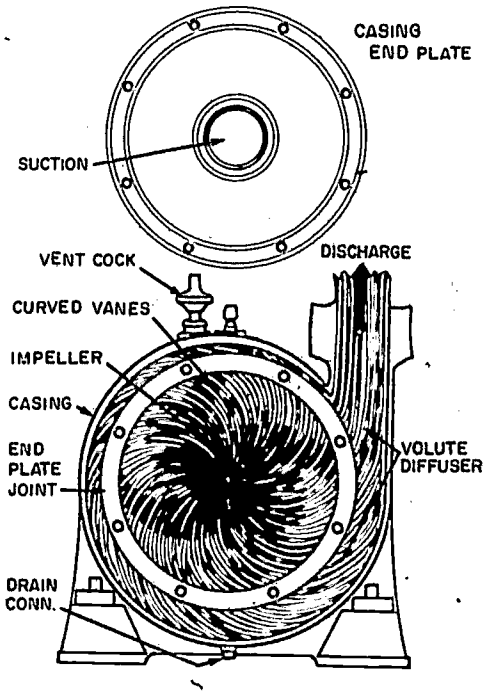

139.38X

Figure 10-9.—Operating principle of a centrifugal pump.

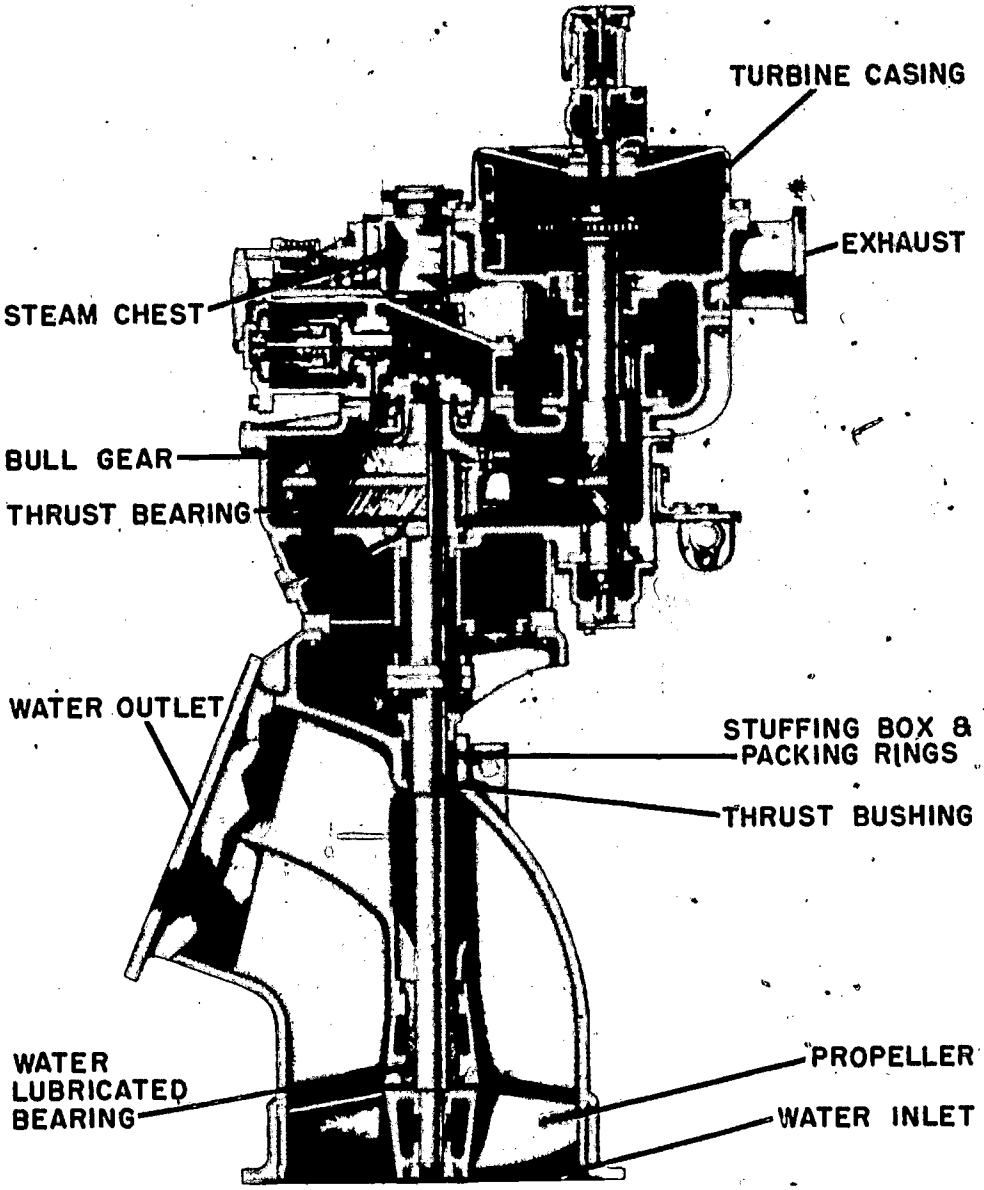

47.37

Figure 10-10.—Main condenser circulating (propeller) pump (showing reduction gearing).

The propeller pump has a propeller closely fitted into a tubelike casing. The propeller pumps the liquid by pushing it in a direction parallel to the shaft.

Propeller pumps must be located either below or only slightly above the surface of the liquid to be pumped, since they cannot operate with a high suction lift.

JET PUMPS

All the pumps previously described require motors or turbines to drive them. However, jet pumps have no moving parts. The flow through the pump is maintained by a jet of water or steam which passes through a nozzle at a high velocity.

Jet pumps are generally classified as EJECTORS (which use a jet of steam to entrain and transport air, water, or other fluid) and EDUCTORS (which use a flow of water to entrain and pump fluids). The basic principle of operation of these two devices is identical.

A simple jet pump of the ejector type is shown in figure 10-11. In this pump, steam under pressure enters the chamber (C) through a pipe (A) which is fitted with a venturi-shaped nozzle (B) having a reduced area which increases the velocity of the steam. The fluid in the chamber at point F, in front of the nozzle, is driven out of the pump through the discharge line (E) by the force of the steam jet. The size of the discharge line increases gradually beyond the chamber to decrease the velocity of the discharge. As the steam jet forces some of the fluid from the chamber into the discharge line, pressure in the chamber is lowered and the pressure on the surface of the supply fluid forces the fluid up through the inlet (D) into the chamber and out through the discharge line. Thus, pumping action is established.

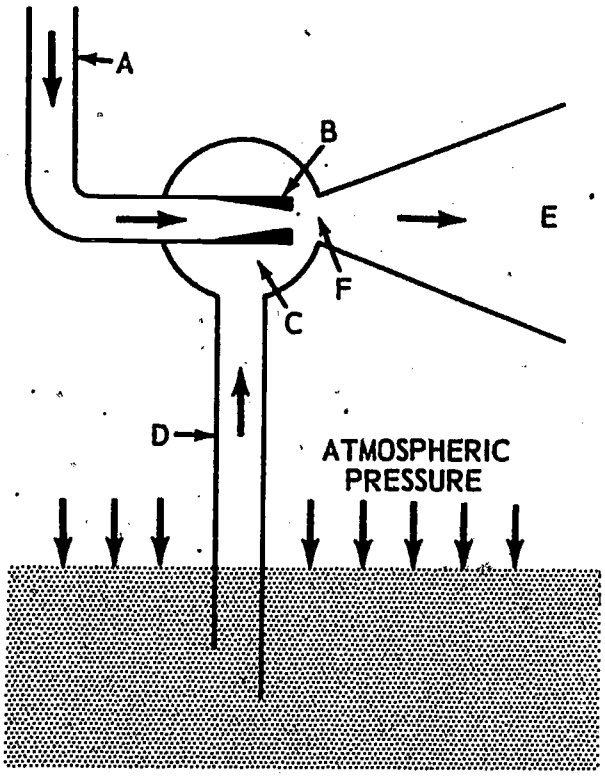

75.283

Figure 10-11.—Jet pump (ejector type).

Jet pumps of the ejector type are occasionally used aboard ship to pump small quantities of drainage overboard. Their primary use on naval ships is to remove air and other noncondensable gases from the main and auxiliary condensers.

Figure 10-12 shows a portable eductor of the type found in damage control lockers. The principle of operation is the same as that described for the ejector type of jet pump; but water is used instead of steam. All the water which enters the large end of the jet must go out through the small end. Since the exit end is smaller than the entrance end, the water leaving the jet will have a greater velocity than it had upon entering the jet. The venturi-shape of the diverging nozzles causes a low pressure area, creating suction which draws water through the strainer and entrains it through the diverging nozzle. This ensures a constant flow.

Eductors may also be used for salvage work and with fog or foam equipment. Eductors will operate when entirely submerged in a flooded compartment and will discharge against a moderate pressure.

Although fire and bilge pumps are still being installed in new ships, fixed-type eductors are the principal means of pumping water overboard through the drainage system. By the use of eductors, centrifugal fire pumps can serve as drainage pumps without having to run the risk of fouling the pump with debris present in the bilges; this is especially useful when there has been damage to a ship.

CONSTANT-PRESSURE PUMP GOVERNORS

Constant-pressure pump governors used in the Navy are applied almost entirely to steam-driven pumps, both rotary and centrifugal types. A constant-pressure pump governor operates to maintain a constant discharge pressure, regardless of pump capacity or output.

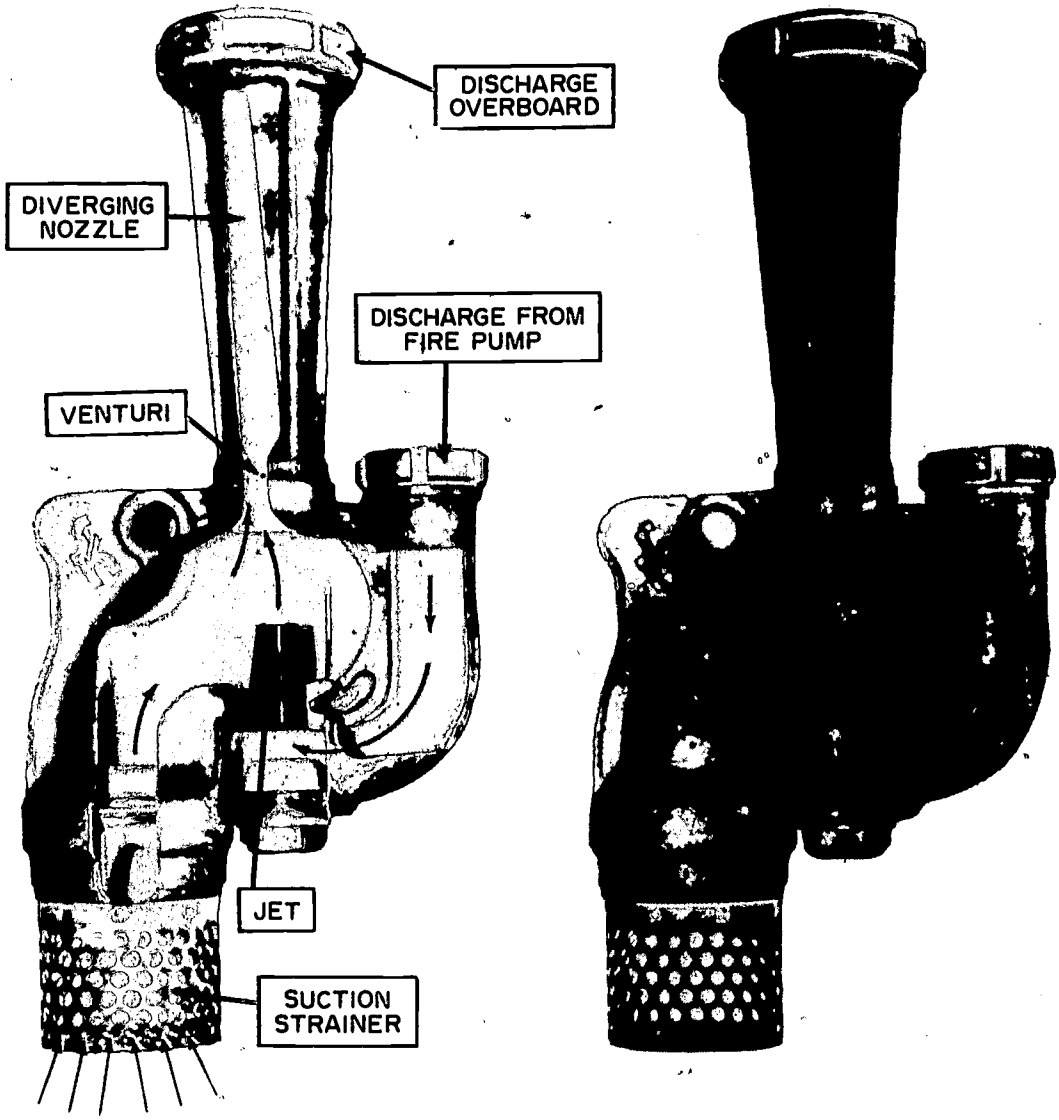

47.48

Figure 10-12.—Eductor.

The constant-pressure pump governor (sometimes referred to as pressure regulating) consists essentially of an automatic throttling valve installed in the steam supply line to the pump's driving unit. A pipeline connects the governor to the pump's discharge line. Variations in discharge pressure, or in pressure differential, actuate the governor, causing it to regulate the pump speed by varying the flow of steam to the driving unit.

A constant-pressure pump governor for a lubricating oil service pump is shown in figure 10-13. The governors used on fuel oil service pumps and on main feed pumps are of the same type. The size of the upper diaphragm and the amount of spring tension vary on governors used for different services. You will find detailed information concerning the operation and adjustment of governors in chapter 9470 of *NavShips Technical Manual*.

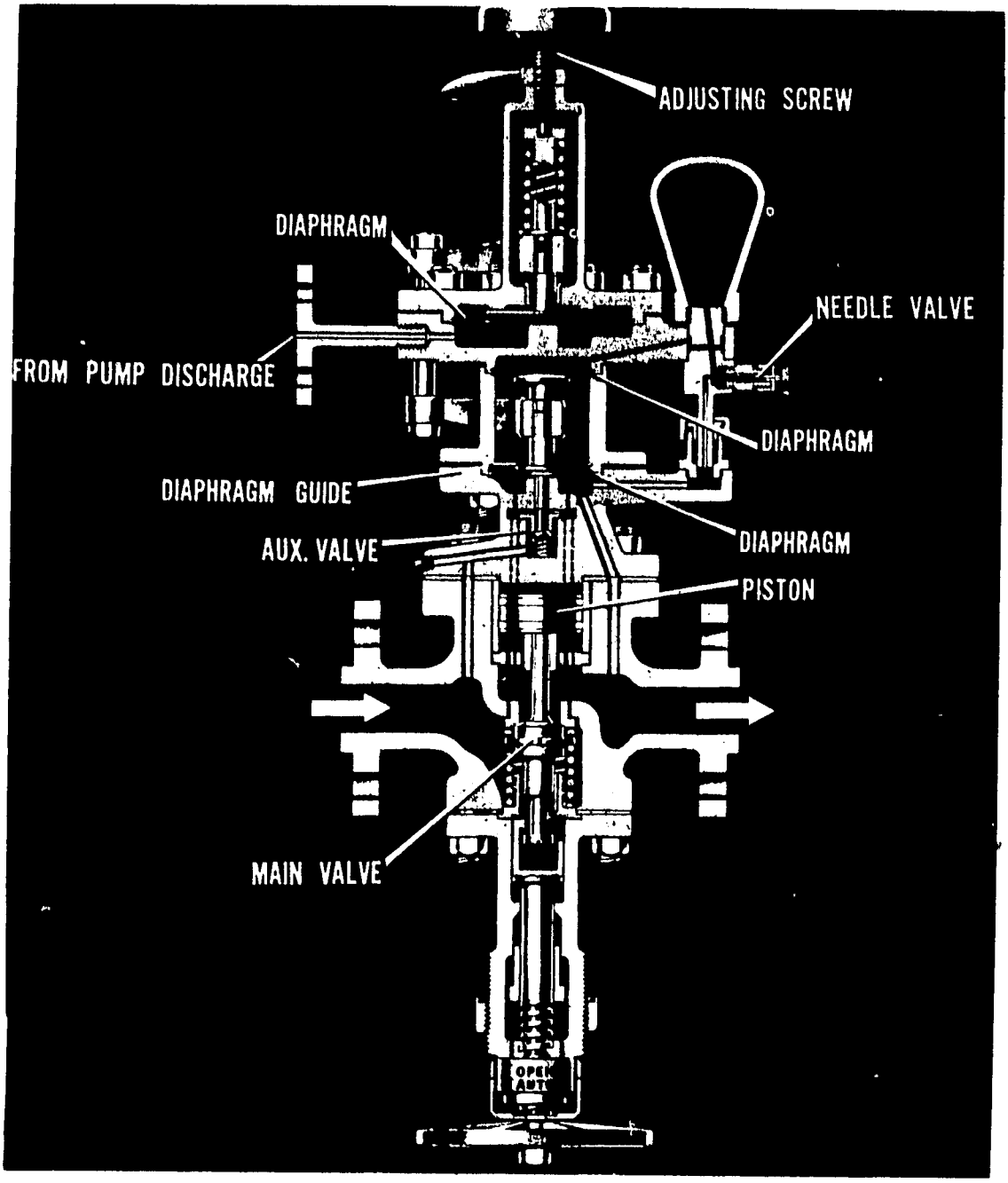

38.90

Figure 10-13.—Constant-pressure pump governor.

VALVES

Most of the equipment in the engineering spaces is operated by either opening or closing the valves. A valve is a device for stopping and/or controlling the flow of a fluid (liquid or gas) through a pipe or an opening. Valves are installed in every piping system aboard ship. You will find them in the fuel line, the feedwater pipes, and the steam lines. In addition to the large valves which control the flow of fluid in the lines, there are small valves which pipe the flow around the larger ones. These small valves are called bypass valves which are used to equalize pressures.

Valve designs vary greatly to meet service demands. Most valves are classified as stop valves (globe, gate, plug, piston, butterfly, and needle valves), check valves, or combination stop-check valves.

Valves can be operated in various ways. They may have hand wheels, air or hydraulic pistons, or they may be operated by gravity, or by a solenoid.

STOP VALVES

Stop valves are used to close off a pipe or opening so that the contained fluid cannot pass through. Some valves can be closed partially to cut down or regulate the flow of fluid.

The typical stop valve consists of the body, an opening (port) through which the fluid flows, a movable disk for closing this port, and some means to raise and lower the disk. In the closed position, the disk fits snugly into the port, closing it completely. When the valve is open, the disk uncovers the port, allowing the fluid to pass through. Each type of stop valve has a different mechanical arrangement for closing the port in the valve.

Globe Valves

Globe valves generally derive their name from their body shape. (Other types of valves may also have globular bodies; hence, the name may tend to be misleading.) A cross-sectional view of a globe stop valve is shown in figure

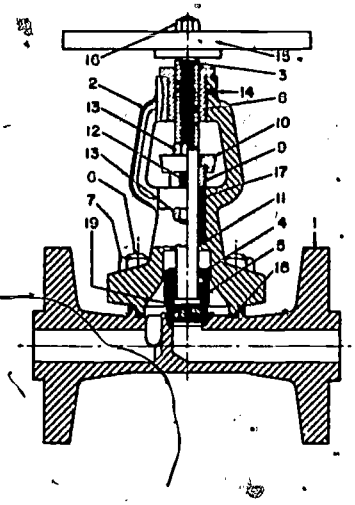

LIST OF PARTS	
PART NO.	NAME OF PART
1	VALVE BODY
2	BONNET
3	STEM
4	DISK NUT
5	DISK
6	BONNET STUD
7	BONNET STUD NUT
8	BONNET BUSHING
9	GLAND
10	GLAND FLANGE
11	PACKING STOP RING
12	GLAND STUD
13	GLAND STUD NUT
14	SET SCREW
15	HANDWHEEL
16	HANDWHEEL NUT
17	PACKING
18	BONNET GASKET
19	DISK WASHER

38.117

Figure 10-14.—Cross-sectional view of globe stop valve.

10-14. Globe valves are widely used throughout the engineering plant for a variety of services. These valves may be used partly open as well as fully open or fully closed, and are suitable for use as throttling valves.

The moving parts of a globe valve consist of a disk, valve stem, and a handwheel. The stem, which connects the handwheel and the disk, is threaded and fits into threads in the valve bonnet. When you turn the handwheel the stem moves up or down in the bonnet, carrying the disk with it. The valve is closed by turning the handwheel clockwise and opened by turning it counterclockwise.

The valve should never be jammed in the open position. After a valve has been fully opened, the handwheel should be turned toward the closed position one-half turn. Unless this is done, the handwheel is likely to freeze in the open position, and it will be difficult to close the valve. Many valves have been damaged in this manner. Another reason for not leaving globe valves fully open is that it is sometimes difficult to tell whether a valve is open or closed. If a valve is jammed in the open position, the stem may be damaged or broken by someone who thinks that the valve is closed and tries to force it open. Valves that are exceptions to the above rule are called BACK SEATING valves.

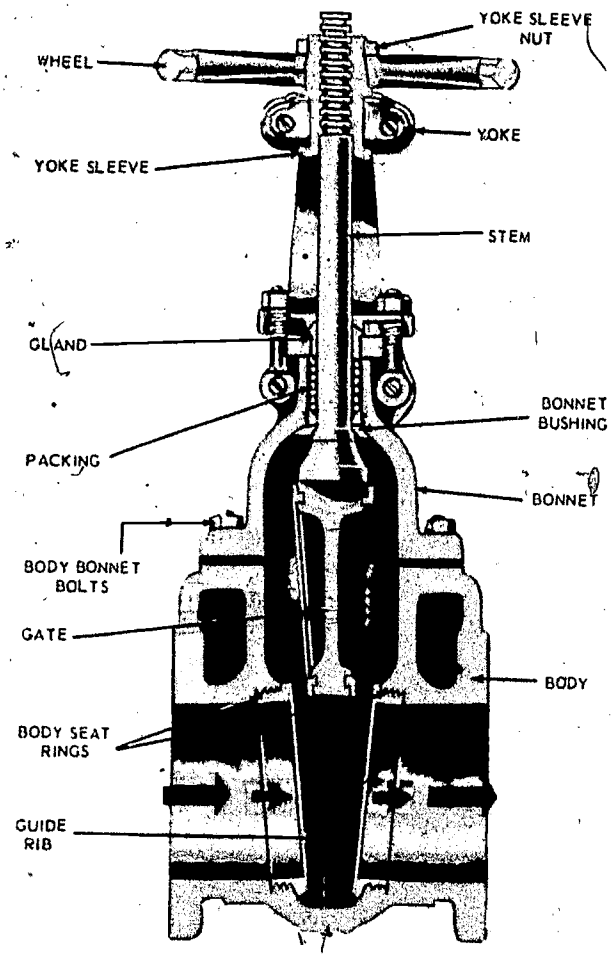

11.317X

Figure 10-15.—Cutaway view of gate stop valve (rising stem type).

Sometimes the operation of a back seating valve will require that it be fully opened. Whenever this is so, special instructions to that effect will be given. These valves are so designed that, when fully open, the pressure being controlled cannot reach the valve stem packing, thereby eliminating possible leakage past the packing.

The edge of the port, where the disk touches it, is called the valve seat. The edge of the disk and the seat are machined and ground together to form a tight seal. The rate at which the fluid flows through the valve is regulated by the position of the disk. When the valve is closed, the disk fits firmly against the valve seat. When it is open, the fluid flows through the space between the edge of the disk and the seat.

Packing is placed in the stuffing box or space that surrounds the valve stem and is held in place by a packing gland. With continued use of the valve, the stem will gradually wear the packing away and a leak may develop. You can generally stop a slow leak by tightening the gland a turn or two. If this fails, pressure should be removed from the valve and the packing should be renewed.

Gate Valves

Gate valves (fig. 10-15) operate on the same principle as the globe valve, but they have a gate instead of a disk. The port is the full size of the pipe and extends straight through the valve. The gate is connected to the valve stem and is raised or lowered by turning the handwheel. When the valve is in closed position, the wedge-shaped gate blocks off the port; in open position, the gate is drawn up into a recess in the top of the valve.

Gate valves are used when a straight-line flow through the valve is desirable. They do not work well as throttles because they tend to chatter. Therefore, gate valves are usually operated in the fully open or shut position. They are often used in water lines.

Plug Valves

Plug valves (sometimes referred to as plug cocks) are frequently used in gasoline and oil feed pipes as well as in water drain lines. The ordinary petcock is a good example of this valve.

The body of a plug valve (fig. 10-16) is shaped like a cylinder with holes or ports in the cylinder wall in line with the pipes in which the valve is mounted. Either a cone-shaped or a cylindrical plug, attached to the handle, fits snugly into the valve body. A hole bored through the plug is in line with the ports in the valve body. Turning the plug valve handle

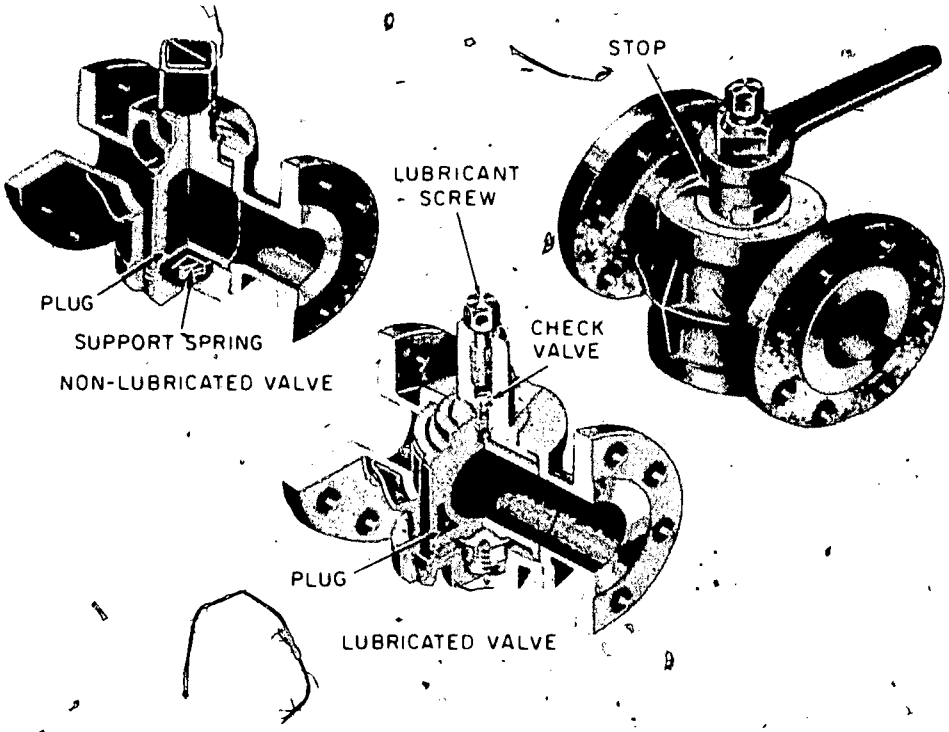

Figure 10-16.—Plug valves.

(which is in line with the hole in the plug) lines up the hole in the plug with the ports in the valve body so that fluid can pass through the valve. The flow can be stopped by turning the plug 90° (one-quarter turn) from the open position.

Some plug valves are designed as three-way or four-way selector valves. Three or more pipes are connected to a single valve in line with the same number of ports in the cylinder wall. Two or more holes drilled in the plug provide a variety of passages through the valve. When a valve of this kind is located in a fuel line, the liquid may be drawn from any one of two or three tanks by setting the handle in different positions.

Needle Valves

Needle valves are used to make relatively fine adjustments in the flow of fluid. A needle valve has a long tapered point at the end of the valve stem. This needle acts as a disk. Because of the long taper, part of the needle passes through the opening in the valve seat before the needle actually seats. This arrangement permits a very gradual increase or decrease in the size of the opening and, thus, allows more precise control of flow than can be obtained with an ordinary globe valve.

Butterfly Valves

Butterfly valves are used for liquid service only. The disk in this type valve is flat and is operated by turning the hand lever on the stem. When the lever is positioned 90° to the piping, the valve is fully open; the valve is in the fully closed position when the lever is in line with the piping.

CHECK VALVES

Check valves permit a fluid to flow through a line in only one direction. They have many uses, both aboard ship and ashore. The air valves in automobile tires, the valves in an ordinary water pump, and the feedwater check valves on

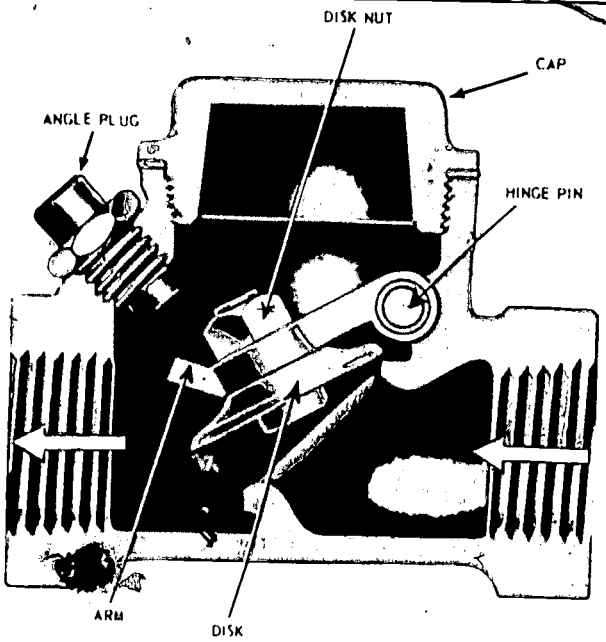

11.319X

Figure 10-17.—Swing-check valve.

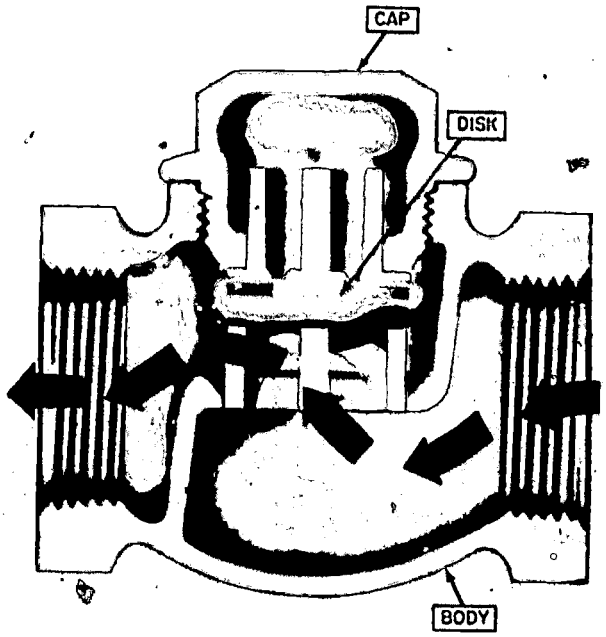

11.320

Figure 10-18.—Cutaway view of lift-check valve.

a steam drum are examples of check valves. All of these valves open and close automatically, but some have a handle or handwheel to lock them closed or to limit the size of the opening.

The port in a check valve may be closed by a disk, a ball, or a plunger. In some valves a spring closes the valve, while in others the weight of the disk or ball holds the valve against the seat. The valve opens when the pressure on the inlet side is greater than the pressure on the outlet side of the valve. It closes automatically when the pressure on the inlet side is less than that on the outlet side. Figure 10-17 illustrates a swing-check valve and figure 10-18 shows a lift-check valve. These valves are often installed in drain lines, where it is important that the flow be in only one direction.

STOP-CHECK VALVES

As you have seen, most valves can be classified as being either stop valves or check valves. Some valves, however, can function as either a stop valve or as a check valve, depending on the position of the valve stem. These valves are known as STOP-CHECK VALVES.

Two similar stop-check valves are shown in cross section in figure 10-19. As you can see, the flow and operating principles of this type valve very much resembles the check valve. However, the valve stem is long enough so that when it is screwed all the way down it holds the disk firmly against the seat, thus preventing any flow of fluid. In this position, the valve acts as a stop valve. When the stem is raised, the disk can be opened by pressure on the inlet side. In this position, the valve acts as a check valve, allowing the flow of fluid in only one direction. The maximum lift of the disk is controlled by the position of the valve stem. Therefore, the position of the valve stem can limit the amount of fluid passing through the valve even when the valve is operating as a check valve.

Stop-check valves are used in various locations throughout the engineering plant. Perhaps the most familiar example is the so-called boiler feed-check valve, which is actually a stop-check valve rather than a true check valve. Stop-check valves are used in many drain lines; on the discharge side of many pumps; and as exhaust steam valves on auxiliary machinery.

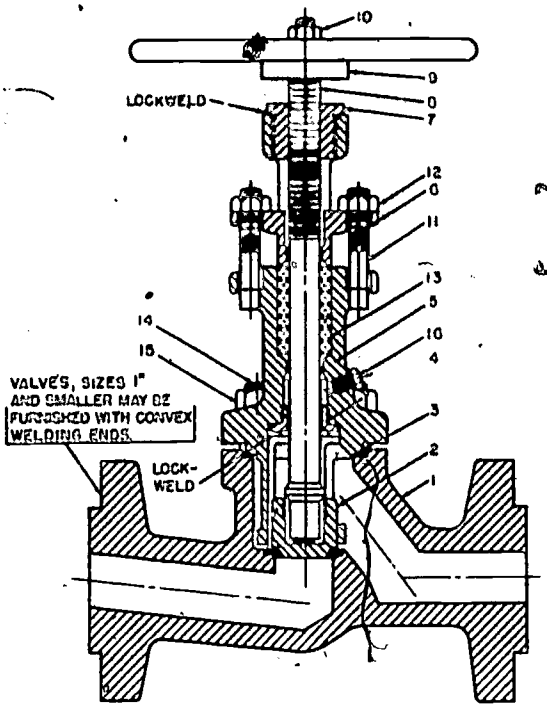

LIST OF PARTS	
PART NO	NAME OF PARTS
1	BODY
2	DISK
3	GASKET
4	STEM BUSHING
5	BONNET
6	GLAND
7	YOKE BUSHING
8	STEM
9	HANDWHEEL
10	HANDWHEEL NUT
11	GLAND BOLT
12	GLAND BOLT NUT
13	PACKING
14	BONNET STUD
15	BONNET STUD NUT
16	RELIEF PLUG
17	SEAT RING
18	SPACER
19	GLAND FLANGE
20	YOKE BUSHING SET SCREW
21	JAMB NUT

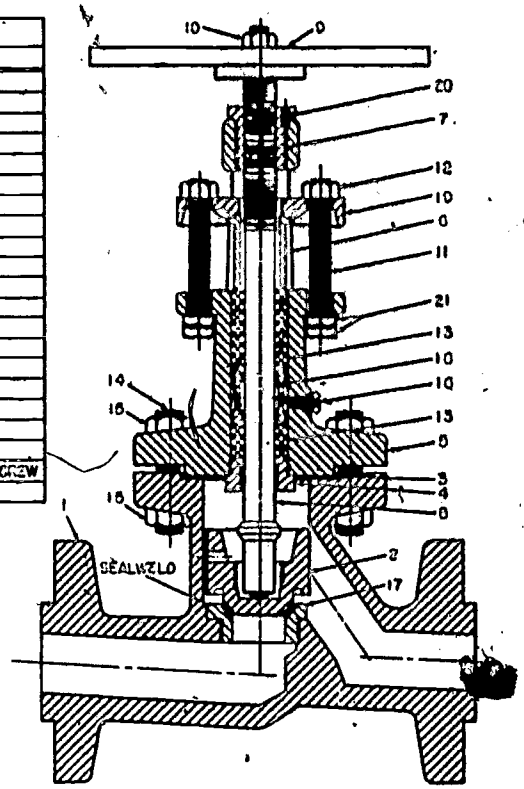

11.321

Figure 10-19.—Stop-check valves.

THROTTLE VALVES

A throttle valve is installed in the main steam line just ahead of the engine. It is operated by a handwheel and can be opened or closed quickly for starting and stopping. These valves can also be set at any in-between position to regulate the speed of the engine. Unlike check valves, they are installed so that the steam pressure tends to close rather than open them.

The pressure in the main steam lines of some installations is 600 psi. The disk of a throttle valve 6 inches across has an area of about 28 square inches. Therefore, the force exerted on the valve disk tending to keep it closed is 16,800 pounds (600 X 28). Throttle valves are designed to equalize this force, so that they can be opened easily.

A double-poppet throttle valve is two valves in one. It has two ports and two disks attached to a single stem. Both valves open or close at the same time whenever the handwheel is turned. The ports and the disks are so designed that the steam tends to close one of the disk valves and open the other. Figure 10-20 illustrates the operating principle of a double-poppet throttle valve.

The forces exerted on the disks of the double-poppet throttle valve resemble a tug-of-war. The steam pushes down on top of one disk and up on the bottom of the other disk. Like the rope in the tug-of-war game, the stem keeps the disks in the same position, relative to each other.

RELIEF VALVES

Relief valves are installed in the steam, water, air, and oil lines, and on various units of machinery aboard ship. They open

automatically when the pressure within the line becomes too high. Relief valves protect piping much the same as fuses protect electrical equipment and wiring in the home. There are many types of relief valves. Most relief valves have either a disk or a steel ball acting against a coil spring.

The disk-type relief valve in figure 10-21A consists of a valve body, a valve disk, and a stem. The steel spring pushes down on the disk and keeps the valve closed. The force of the spring is generally adjusted by setting an adjusting nut on top of the spring. The inlet side of the valve is connected to the system to be protected.

When the force on the bottom of the disk, exerted by the pressure of the fluid in the line, becomes greater than the compression of the spring, the disk is pushed off the seat, opening the valve. The valve outlet may be opened to the atmosphere in compressed air or steam lines. When the valve is used to protect a pump, its outlet is connected to the suction line leading to the pump; the excess fluid passes through the relief valve, and back to the inlet side of the pump.

The ball-type relief valve shown in figure 10-21B operates on the same principle as the disk valve. The ball valve is generally used on lube oil lines. The operating pressure is regulated by adjusting the threaded plug (not illustrated) which holds the spring in place.

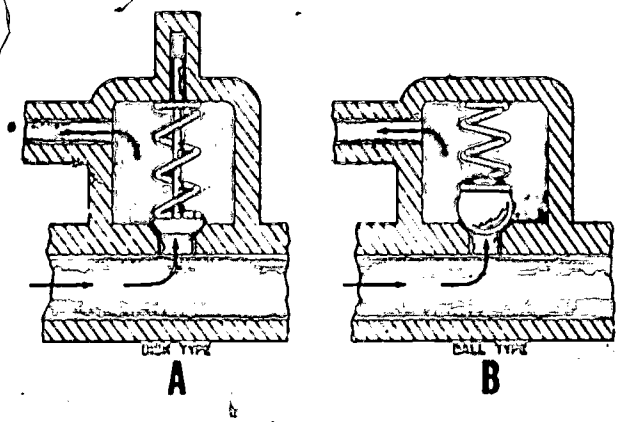

139.41

Figure 10-21.—Relief valves.

REDUCING VALVES

The heating system and the galley operate on low-pressure steam. The source of steam for these systems is the boilers, which are under high pressures. Reducing valves are installed in the steam lines to these systems to reduce the pressure. These valves will hold a constant pressure in the delivery lines, even if the boiler pressure varies over a wide range.

Most reducing valves depend on a balance between the outlet or operating pressure and the pressure of a spring or compressed air in a sealed chamber. Although some of these valves are quite complicated, the principle on which they operate is easily understood.

The simplified reducing valve in figure 10-22 has a main valve, a piston, and a spring. The

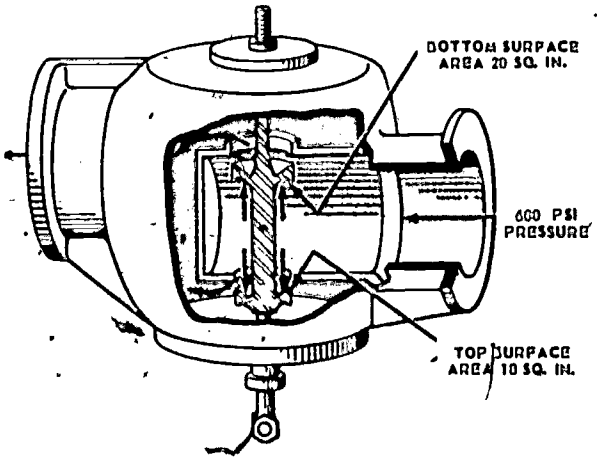

139.40

Figure 10-20.—Operating principle of a double-poppet throttle valve.

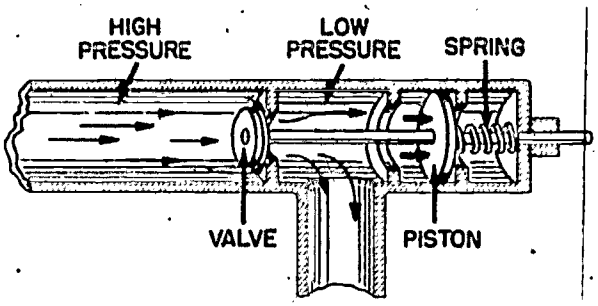

139.42

Figure 10-22.—The operating principle of a simple reducing valve.

compression of the spring pushes the piston to the left and opens the valve. When the steam is turned on, it passes through the open valve and builds up pressure in the outlet chamber. Whenever the force exerted on the piston becomes greater than the force exerted by the spring, the piston moves to the right and closes the valve.

During the operation, the outlet steam pressure and spring force remain in balance with the valve partly open. Any slight variation in outlet pressure will upset this balance. The piston will move and increase or decrease the size of the valve opening and restore the original outlet pressure.

In some valves the spring is replaced by a sealed chamber which contains compressed air. The air pressure acts on a diaphragm instead of on a piston. The valve can be set to maintain any desired pressure by adjusting the air pressure in the sealed chamber. Sometimes the diaphragm is located between two chambers; one of them opened to the inlet, and the other opened to the outlet steam. The action of the diaphragm operates a valve which in turn regulates the steam pressure on a piston connected to the main valve. In all reducing valves, the outlet pressure controls the rate at which the inlet steam is permitted to pass through the valve.

SAFETY VALVES

Each boiler is fitted with safety valves which allow steam to escape from the boiler when the pressure rises above specified limits. The capacity of the safety valves installed on a boiler must be great enough to reduce the steam drum pressure to a specified safe point when the boiler is being operated at maximum firing rate with all steam stop valves completely closed. Safety valves are installed on the steam drum and at the superheater outlet.

Several different types of safety valves are used on naval boilers, but all are designed to open completely (POP) when a specified pressure is reached and to remain open until a specified pressure drop (BLOWDOWN) has occurred. Safety valves must close tightly without chattering and must remain tightly closed after seating.

It is important that you understand the difference between boiler safety valves and ordinary relief valves. The amount of pressure required to lift a relief valve increases as the valve lifts, because the resistance of the spring increases in proportion to the amount of compression. Therefore, a relief valve opens slightly at a specified pressure, discharges a small amount of fluid, and closes at a lower pressure which is very close to the pressure that caused it to open.

Can you see why relief valves will not do for boilers? If the valves were set to lift at anything close to boiler pressure, the valves would be constantly opening and closing, pounding the seats and disks and causing early failure of the valves. Furthermore, relief valves will not rapidly discharge the large amount of steam that must be discharged quickly to bring the boiler pressure down to a safe point. Relief valves reseat very soon after they are opened. (Figure 10-23 shows a typical safety valve.)

PIPING

Piping is used throughout the engineering spaces. One piping system carries fuel from the service tanks to the furnace. A second piping system supplies the boiler with feedwater. A third piping system carries steam from the boiler to the engines and other points where it is needed. Still other systems are used aboard ship to carry salt water, fresh water, gasoline, compressed air, and certain gases. The nature of the substances carried in the pipes, as well as the nature of the services performed, makes it necessary to use a variety of materials, sizes, and designs of piping and attached fittings.

PIPING DEFINITIONS

In routine operations aboard ship, there is frequent misuse of the terms pipe, tubing, and piping by strikers and inexperienced naval personnel. As a step toward correcting the misuse of these three terms, the following definitions are offered.

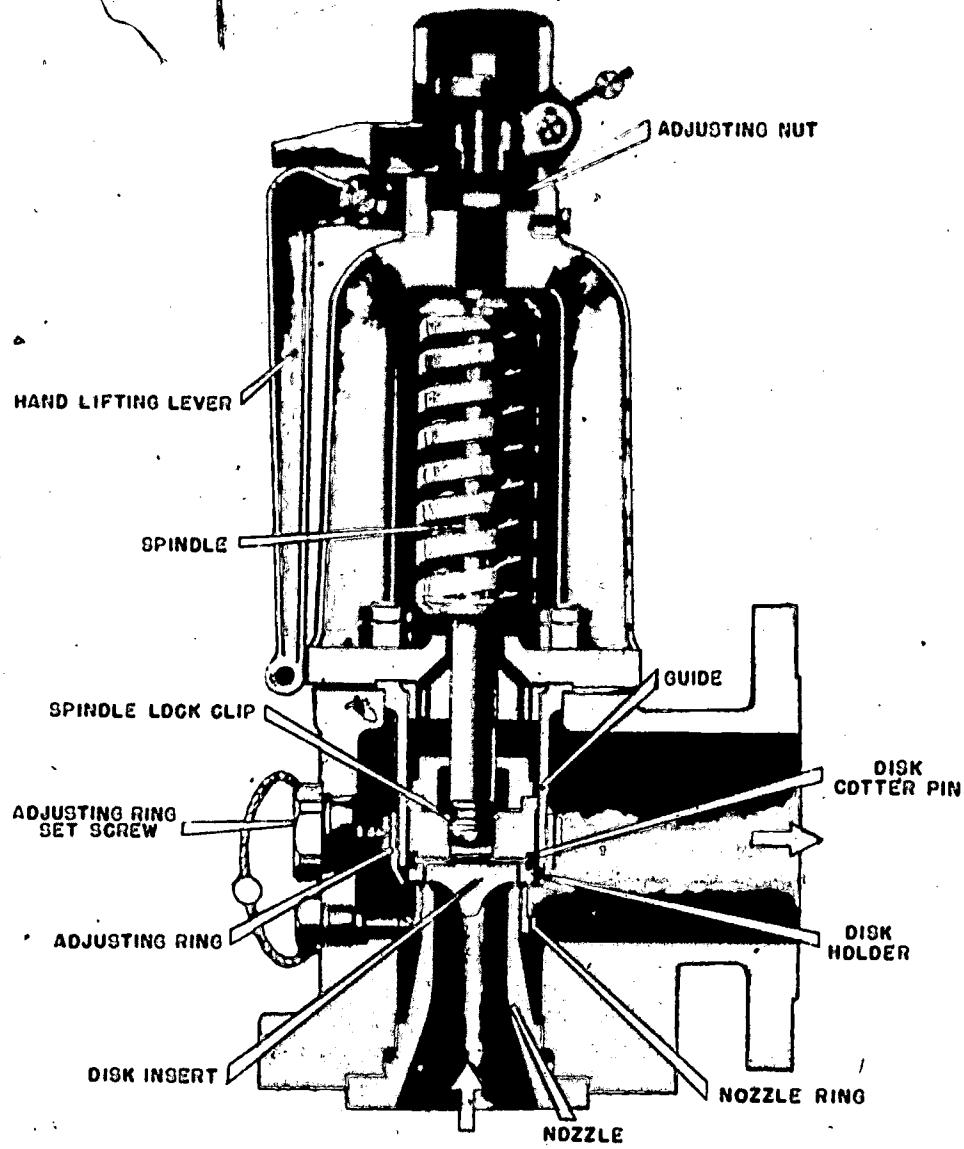

29.219

Figure 10-23.—Steam drum safety valve (nozzle reaction type).

1. A PIPE is made of metal such as cast iron, wrought iron, steel, copper, or brass. The size of a pipe is designated by its nominal inside diameter (ID) in accordance with standard iron pipe size (IPS), expressed in inches or fractions of an inch from 1/8 inch to 12 inches. Pipe is designated in three grades or weights of wall thickness as standard, extra strong, or double extra strong. The outside diameter (OD) is the same for each of the three wall thicknesses of any pipe with a given IPS dimension, while the actual ID of these three pipes will differ. If the ID measures more than 12 inches, the pipe is designated by its OD.

For example, a 1-inch standard pipe will have an ID slightly over 1 inch, while 1-inch

extra strong and 1-inch double extra strong pipes will have lesser ID's because of their greater wall thicknesses. An identical OD permits standardization in pipe dies and taps.

2. TUBING, unlike pipe, is designated for size by its nominal OD dimension; specified for wall thickness in decimals of an inch; and joined by such methods as flanging, welding, soldering, or brazing. Because it has thinner walls, tubing is much more flexible than the thicker-walled pipe. Refrigeration piping systems are examples of shipboard use of tubing.

3. PIPING is an assembly of pipes or tubing, and fittings, forming a whole or composite part of a system designed to transfer fluids (water, steam, gas, and oil).

PIPING MATERIALS

Most of the piping systems aboard ship are made of steel, copper, brass, or a copper-nickel alloy. Steel is used for the steam and fuel oil lines. Copper tubing may be used for piping that carries fresh water, lube oil, and other materials. Nickel-alloy tubing has exceptional resistance to corrosion, and is used when resistance to corrosion is an important consideration, such as in salt water and fresh water lines.

You will often hear the term "alloy" used in connection with various kinds of metals. A metal is said to be an alloy when it contains other metals in addition to the principal one.

A chrome-nickel-steel alloy is made by adding chromium and nickel to the molten steel while it is being manufactured. A common stainless steel used aboard ship, which is a steel alloy, contains chromium and nickel. The alloys of steel, aluminum, and copper are widely used throughout the Navy.

The piping materials must be carefully selected from specified standards approved by NAVSHIPS; not according to appearance. For example, the 7-inch steel tubing employed for transferring 400 psi, 650°F steam may look the same to you as the 7-inch steel tubing employed for transferring 600 psi, 850°F steam. The material of the first may be carbon steel; whereas that of the second MUST be molybdenum alloy steel, capable of resisting high temperature and pressure.

PIPE FITTINGS

A piping system can be made up by joining individual lengths of pipe with unions, couplings, elbows, or other threaded fittings. Piping systems may also be made up by bolted flanges, weldings, solderings, or by flared couplings.

The water pipes in a home and some of the low-pressure pipes aboard ship are fastened together by THREADED fittings. Standard threaded pipe fittings are shown in figure 10-24.

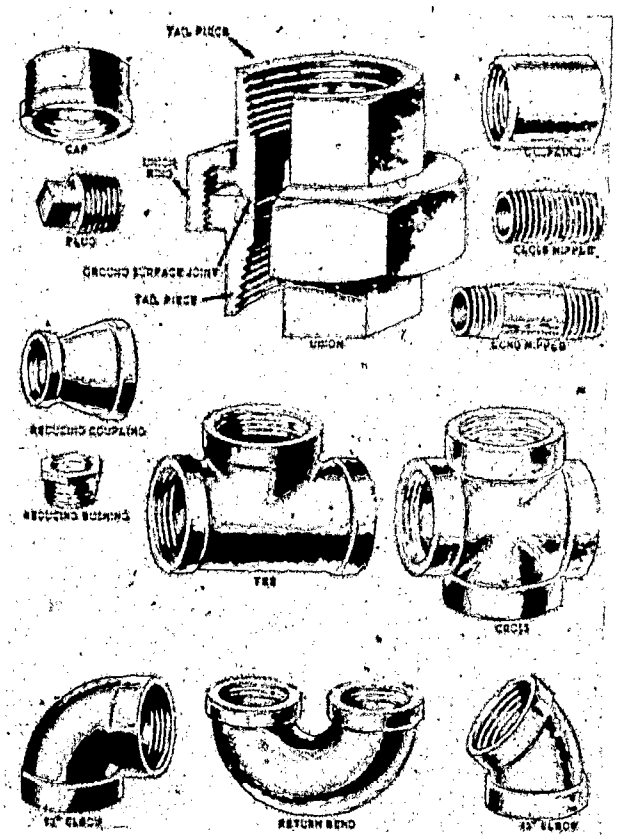

11.310X

Figure 10-24.—Standard threaded pip fittings.

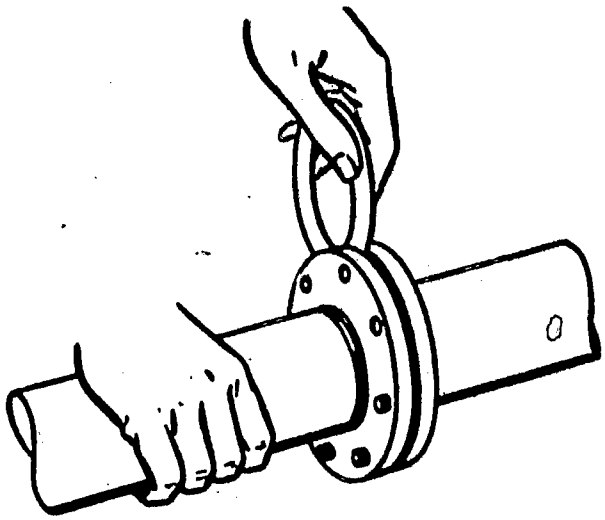

139.43

Figure 10-25.—Gasket insertion.

In high-pressure steam lines the lengths of steel pipe are welded together into sections. A flange is welded to the ends of the sections. A suitable gasket is inserted between flanges, and they are drawn tightly together by stud bolts which pass through the holes in the outer edges of the connection. (See fig. 10-25.) Tubing is usually connected by flared couplings (fig. 10-26) or by soldering.

GASKETS AND PACKING

When leakage occurs in a piping system, it usually occurs at one of the joints. Many methods and materials are used to keep joints from leaking. Flanged joints in piping systems are made up with gaskets to make a tight seal and thus to prevent leakage. (When the coupling is tightened, the gasket is compressed and seals the joints.) Figure 10-27 illustrates various types of gaskets. Connections in which there are sliding or rotating parts require packing material to seal the joints.

Figure 10-28 illustrates several kinds of packing. It is important that the proper gasket or packing material be used in each application. *NavShips Technical Manual*, chapter 9950, and other NavSeas publications contain information on gaskets and packings. Aboard ship, tables which show the types of gasket and packing materials approved for various services are posted in the engineering spaces.

Materials used for gaskets include pressed cork, asbestos, soft iron, Monel, metallic cloth, and hard fiber sheets. The type of gasket to be used depends on the pressures and temperatures to which it will be subjected and in some cases, on the nature of the fluid being carried in the piping system.

Packing is used to seal the area around valve stems, revolving shafts, and sliding shafts. These units are designed with a space, known as a stuffing box, which surrounds the shaft or stem. When the packing has been placed in the stuffing box, it is compressed by tightening a gland or nut which screws up against it. Such an arrangement can be seen if you take an ordinary water faucet apart. The packing serves to keep the water from flowing up around the valve stem.

Packing materials in common use include woven asbestos and rubber; antifriction metal woven with cotton thread and graphite; spun yarn; and soft metal, flax, and rayon combinations. The type of packing to be used depends on the service requirements.

STRAINERS

Strainers (fig. 10-29) are installed in almost all piping lines to prevent the passage of foreign

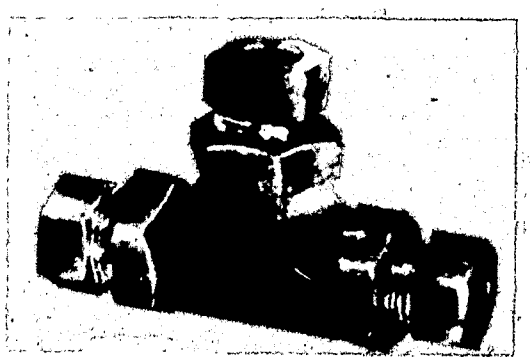

11.310

Figure 10-26.—Tee for flared tubing.

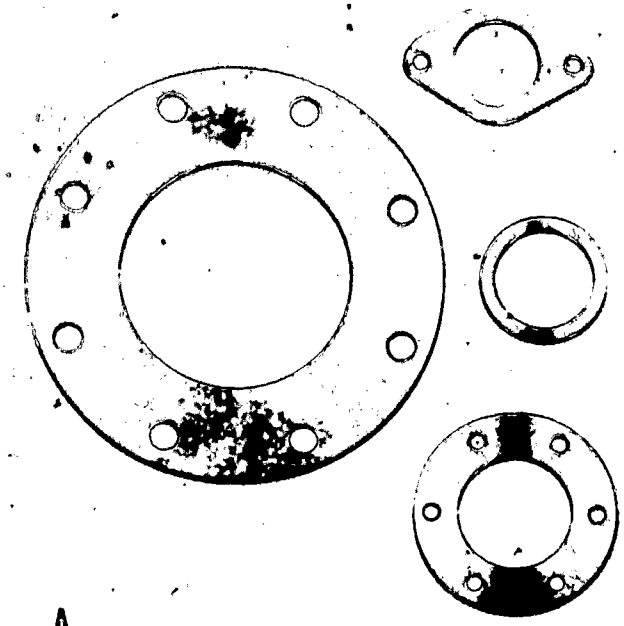

A

B FLAT FULL-FACE GASKET

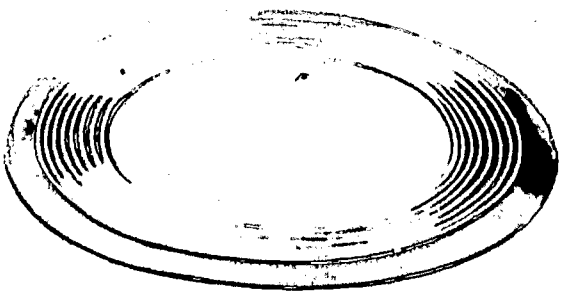

(a) SINGLE-PLATE TYPE

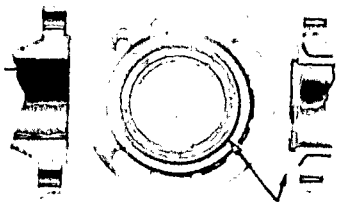

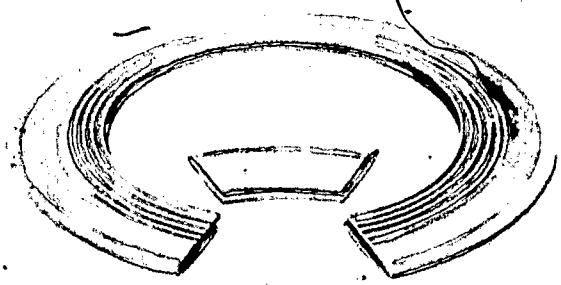

(b) EXPANDING (DOUBLE-PLATE) TYPE

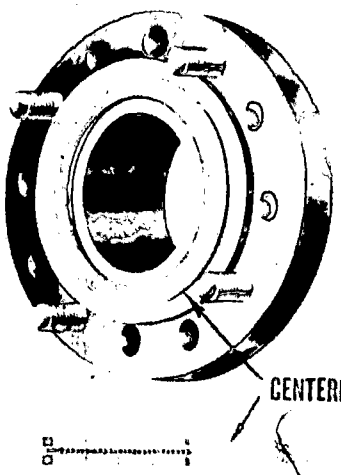

D TYPICAL GASKET CROSS-SECTION

28.36X

Figure 10-27.—Fixed joint gaskets: A. Sheet asbestos gaskets. B. Plain-faced metal gaskets. C. Serrated-faced metal gaskets. D. Spiral-wound, metal asbestos gaskets.

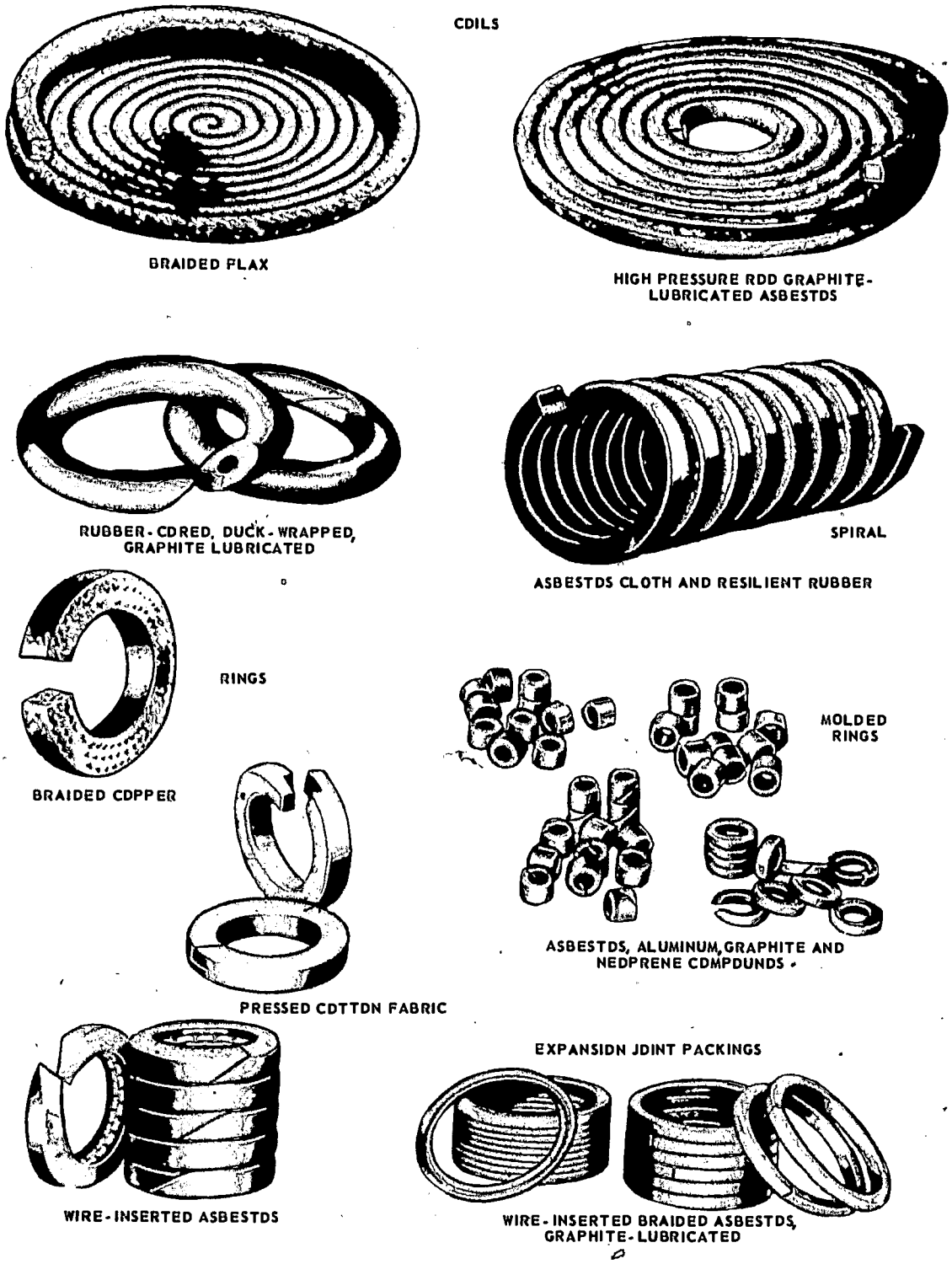

Figure 10-28.—Type of packing.

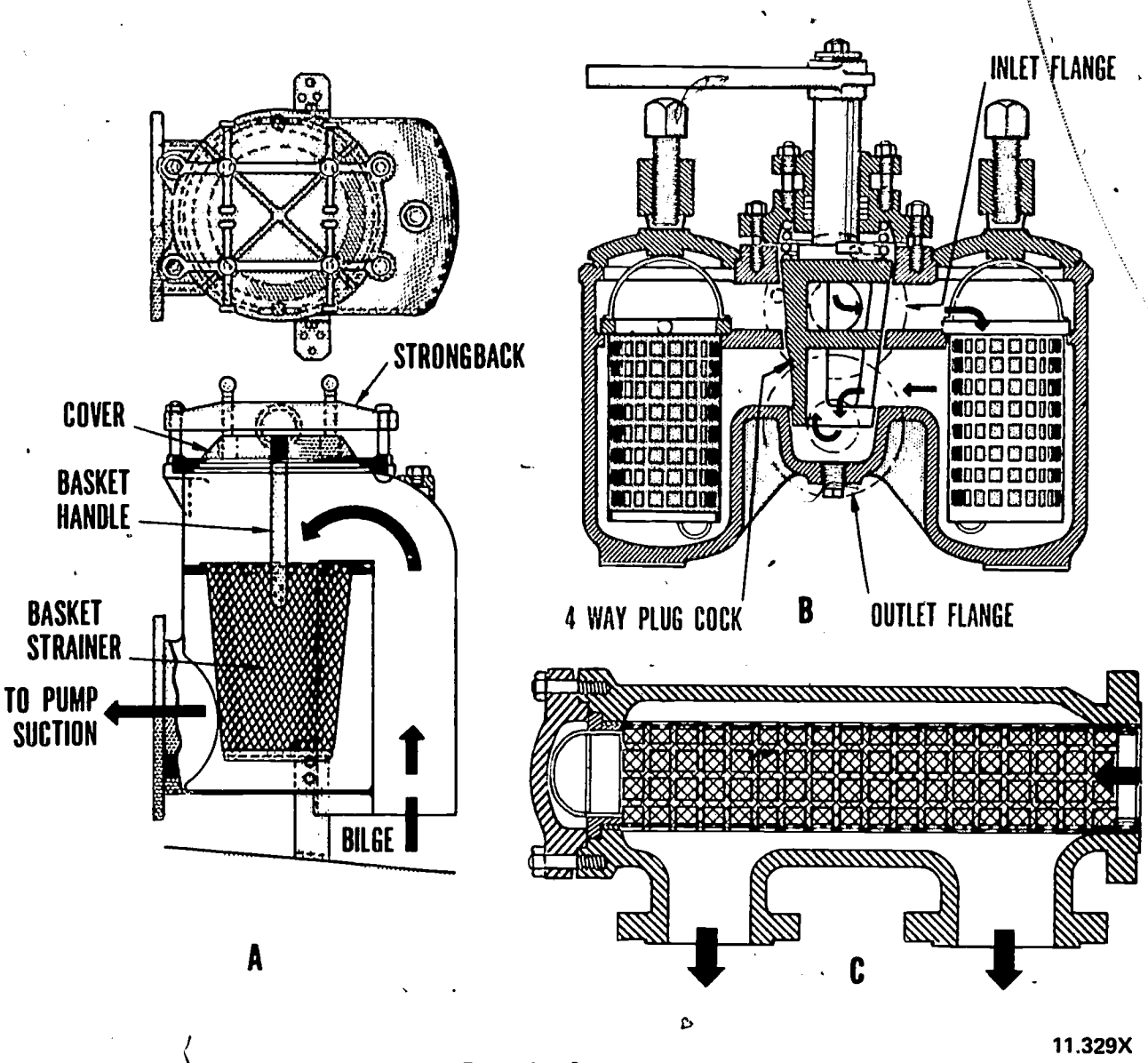

Figure 10-29.—Strainers.

matter which might cause damage to machinery. For example, wire mesh basket strainers are installed on the suction side of many pumps; steam strainers (fig. 10-29C) are installed in main and auxiliary steam lines (just ahead of most auxiliary turbines); and duplex strainers (fig. 10-29B) are fitted into most lubricating oil and fuel lines so that one strainer may be removed and cleaned without disturbing the flow of oil. A bilge suction strainer is shown in figure 10-29A. As you see, the basket strainer keeps foreign matter from going to the bilge pump suction.

STEAM TRAPS AND DRAINS

Steam traps are installed in steam lines to remove condensate. Some steam traps are suitable for high pressure use, others for low pressure use. In general, a steam trap consists of

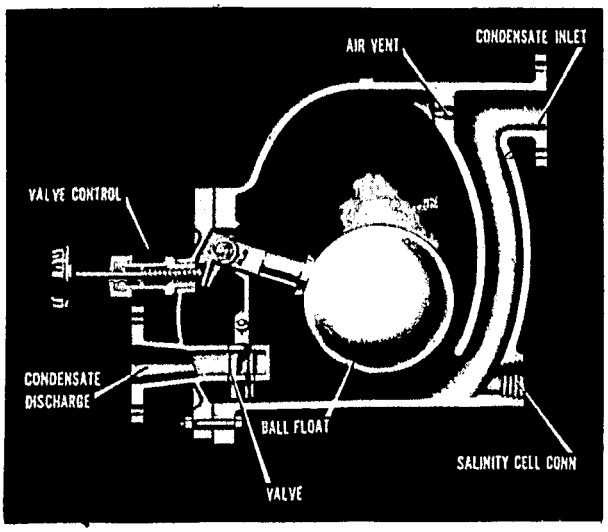

11.325D

Figure 10-30.—A mechanical steam trap.

a valve and some device or arrangement which will cause the valve to open or close, when necessary, to drain the condensate from the line without allowing the escape of steam. Steam traps are installed at the low point of a system or below a machinery unit that has to be drained. Drains are used to remove condensate while steam lines and steam-driven machinery are being warmed up. A drain usually consists of a section of piping and one or more valves.

There are several types of steam traps in use on naval ships: mechanical (fig. 10-30), thermostatic (fig. 10-31), and impulse (fig. 10-32).

You will find additional information on steam traps in chapter 9480 of *NavShips Technical Manual*.

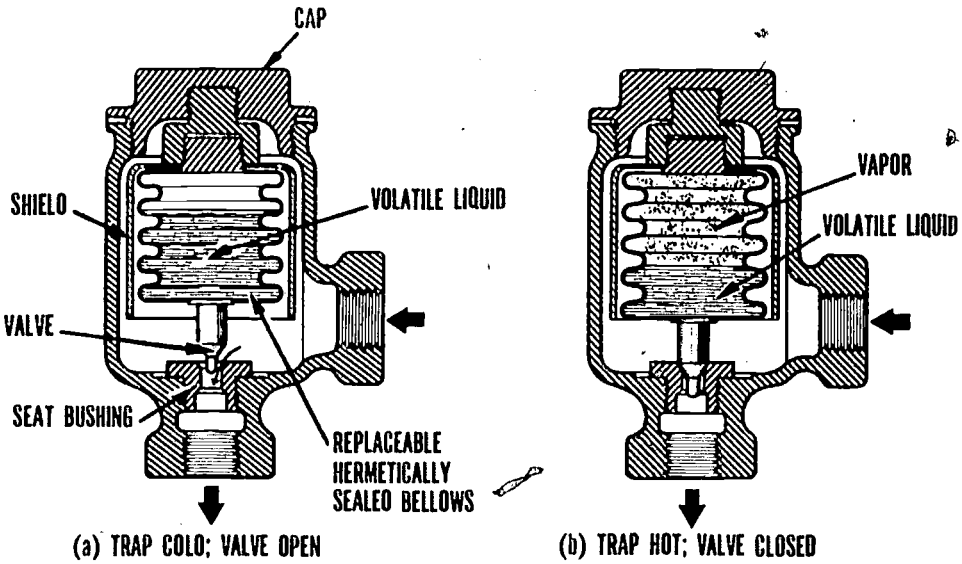

11.326X

Figure 10-31.—Thermostatic steam trap.

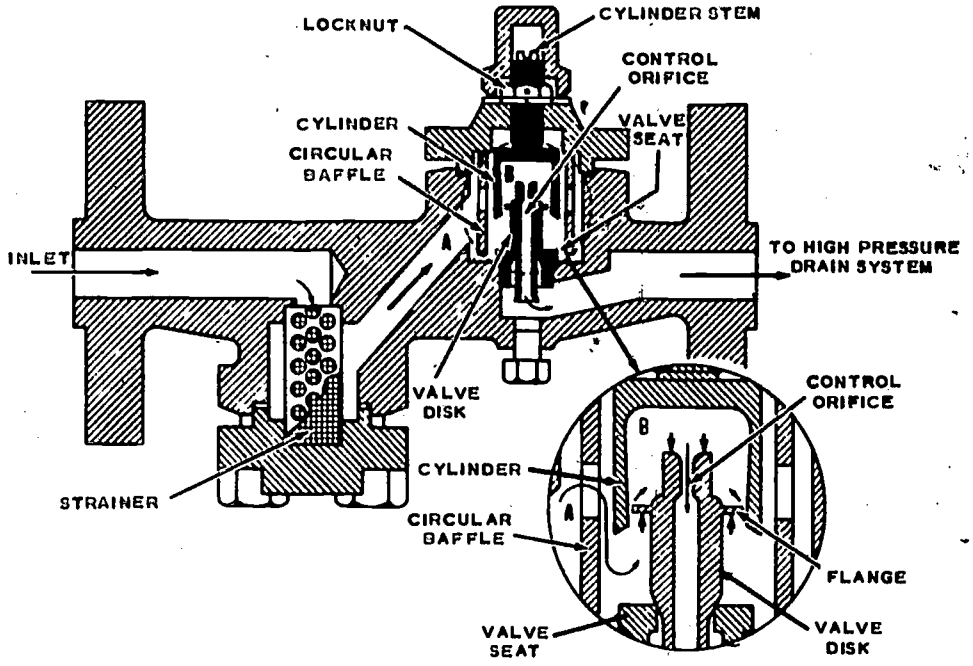

38.126

Figure 10-32.—Impulse steam trap.

CHAPTER 11

SHIPBOARD ELECTRICAL EQUIPMENT

Much auxiliary machinery and equipment aboard modern naval ships is run by electricity. Regardless of rate or rating, all personnel assigned to a ship will operate some electric device in performance of his duties. As a Fireman, you will probably use or operate portable lights, electric drills and grinders, electric heaters, ventilation blowers and fans, electric-driven pumps, and other electrical equipment. Therefore, you should know and observe all applicable safety precautions when working with or around electrical appliances and equipment.

We will not discuss the theories of basic electricity in detail in this chapter. However, we will familiarize you with the different electrical equipment aboard ship and with what the equipment is designed to do.

You will find additional information on the basic principles of electricity in the Navy training manual *Basic Electricity*, NAVEDTRA 10086-B.

INTRODUCTION TO ELECTRICITY

Various techniques and equipment which apply principles of electricity require that you have some degree of theoretical knowledge, as well as practical experience and skill, to operate them safely.

Electric cables carry the electric energy produced by the generators to the electric motors where it is expended in performing work.

All materials will conduct electricity, but some of them offer more resistance than others. Metals such as silver, copper, aluminum, and iron offer little resistance and are called CONDUCTORS.

In contrast to good conductors, some substances, such as wood, paper, porcelain, rubber, mica, and plastics offer a high resistance to an electric current and are known as INSULATORS. Electric circuits throughout the ship are made up of copper wires covered with rubber or some other insulator. The wire offers little resistance to the current, while the insulation keeps the current from passing to the steel structure of the ship.

Definite units have been established to measure electrical properties of conductors and characteristics of electric currents. A brief review of these fundamentals of electricity is given in the sections which follow.

ELECTRIC CURRENT

Current is the rate at which electricity flows through a conductor or circuit. The practical unit, called the AMPERE (I) specifies the rate at which the electric current is flowing. AMPERE is a measure of the intensity or the number of electrons passing a point in a circuit each second. The flow of current can be compared to the flow of water through a pipe.

ELECTROMOTIVE FORCE

Before an electric current can flow through a wire, there must be a source of electric "pressure" just as there must be a pump to build up water pressure before the water will flow through a pipe. This electric pressure is known as ELECTROMOTIVE FORCE (emf) or voltage (E); the source may be a GENERATOR or a BATTERY.

If you increase the pressure on the electrons in the conductor, a greater current will flow, just as an increased pressure on water in a pipe will increase the flow.

RESISTANCE

Electrical resistance (R) is that quality of an electric circuit that opposes the flow of current through it. The unit of resistance is known as the OHM.

WATT

Power (P) is the rate of doing work. In a direct-current (d-c) circuit, power is equal to the product of the current times the voltage, or P = E X I. The practical unit of power is the WATT, or KILOWATT (watts ÷ 1000).

GENERATOR TYPES AND DRIVES

The generator is the heart of the ship's electrical system. A large amount of electricity is required aboard any ship for the proper provision of air, water, and food. Communications between the various parts of a ship depend largely upon the availability of electric power to operate the ship's announcing system, radio, radar, and lighting systems, as well as the training and firing of guns.

Since a generator runs at greatest efficiency when generating or producing its full-rated power output, it is not practicable to have one large generator running constantly at part load. Therefore, two or more small generators are installed aboard ship, depending on the specific type ship.

Another reason for installing two or more generators aboard ship is to ensure that, in the event of damage to a generator, there will be enough power and lights available until the defective generator has been repaired. In addition, generators are installed throughout the engineering spaces of a ship so that the electrical plant cannot be destroyed by one or two enemy shells or bomb hits.

Alternating current (a-c) is used aboard the Navy's combatant ships. The advantages of a-c installations over d-c are lower cost, smaller units, and less maintenance.

D-C GENERATORS AND EXCITERS

A d-c generator is a rotating machine which changes mechanical energy to electrical energy. The essential parts of a d-c generator are the yoke and field windings which are stationary, and the armature which rotates. In a-c generators, called alternators, the field rotates and the armature is stationary. To avoid confusion, the rotating members of d-c generators are called ARMATURES, and in a-c generators they are called ROTORS.

There is no difference between d-c generators and exciters. The exciter is a d-c generator which supplies direct current for an a-c generator. In the past, d-c ship's service generators were used aboard ship. At present, practically all ships have 450-volt (60-hertz) a-c ship's service and emergency generators. The d-c generators used in Navy installations for ship's service, or for exciters, operate at either 120 volts or 240 volts. The amount of power output depends on the size and design of the d-c generator.

A typical d-c generator is illustrated in figure 11-1. The armature is supported on ball bearings. The field coil windings create a magnetic field through which the armature windings are rotated to induce a voltage in the armature windings. The current, driven by the induced voltage, is circulated through the commutator (on the armature shaft) and carried by the brushes (which ride on the commutator) to the external circuit. Part of the armature current is forced through the field winding to increase and maintain the magnetic field strength.

A-C GENERATORS

The general construction of a-c generators is somewhat simpler than that of d-c generators. The heavy current on a d-c generator has to pass through the commutator and brushes. An a-c

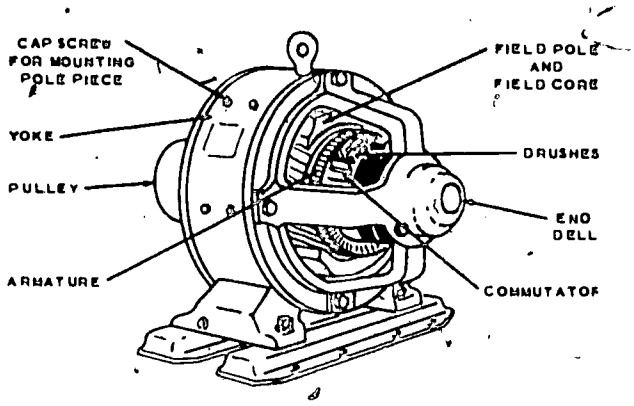

73.161

Figure 11-1.—A d-c generator.

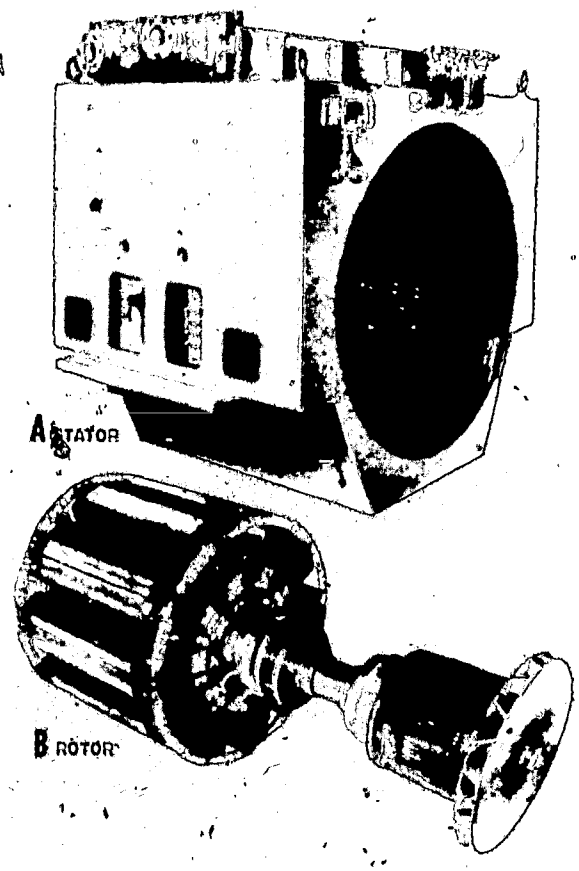

139.43.0X

Figure 11-2.—Low-speed engine-driven alternator.

generator does not have a commutator. The heavy current on an a-c generator is taken from the stationary part or stator windings. An a-c generator has two slip rings which carry a relatively small direct current that is supplied by the exciter to the d-c winding of the rotor.

An a-c generator, like a d-c generator, has magnetic fields and an armature. In a small a-c generator the armature revolves, the field is stationary, and no commutator is required. In a large a-c generator the field revolves and the armature is wound on the stationary member, or stator.

The principal advantages of the revolving-field generators over the revolving-armature generators are that:

1. The load current from the stator is connected directly to the external circuit without using a commutator.

2. Only two slip rings are necessary to supply excitation to the revolving field.

3. The stator winding is not subjected to mechanical stresses that are due to centrifugal force.

The a-c generators, or alternators, used by the Navy are divided into two classes: (1) low-speed, engine-driven alternators, and (2) high-speed, turbine-driven alternators.

The high-speed alternator may be either steam- or gas-turbine driven.

The low-speed, engine-driven alternator (fig. 11-2) has a large diameter revolving field, with many poles, and a stationary armature. The stator (fig. 11-2A) contains the armature windings. The rotor (fig. 11-2B) consists of salient, or protruding, poles on which are mounted the d-c field windings.

The high-speed, turbine-driven alternator (fig. 11-3) is connected either directly or through gears to a steam turbine. The enclosed metal structure is part of a forced ventilation system that carries away the heat by circulation of air through the stator (fig. 11-3A) and rotor (fig. 11-3B).

SHIP'S SERVICE TURBINE-DRIVEN GENERATORS

Ship's service generators are so named because they furnish electricity for the service of the ship. Aboard most steam-driven ships of the Navy, these generators are driven by turbines. Large ships may have as many as six or eight ship's service generators and from one to three emergency diesel-driven alternators.

New construction destroyers have four turbine-driven ship's service generators (two in the forward engineroom and two in the after engineroom), and two smaller diesel-driven emergency generators, one forward and one aft.

The type of ship's service generator commonly used aboard ships in the Navy is illustrated in figure 11-4. Although generator sets (turbogenerators) may be built differently, all have the same arrangement of major parts.

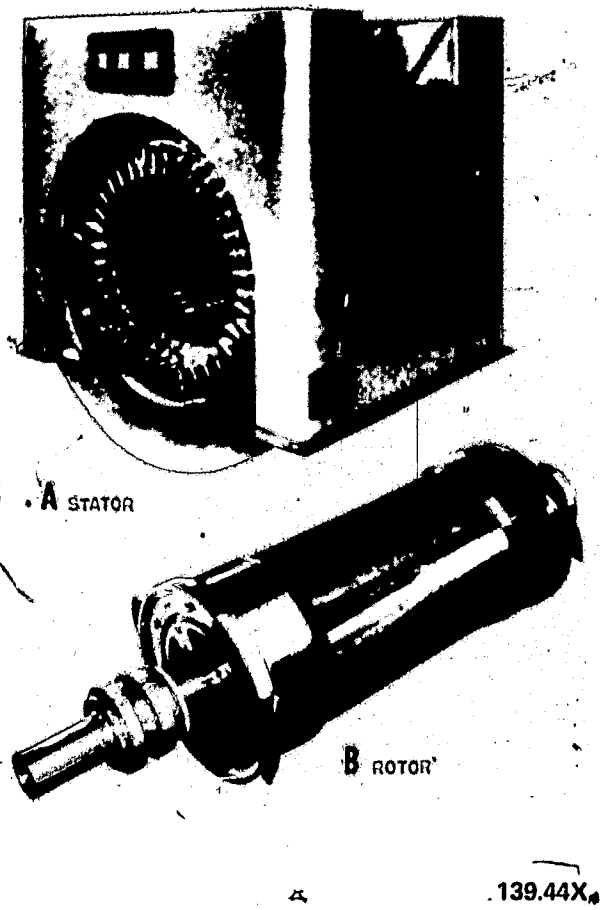

Figure 11-3.—High-speed turbine-driven alternator.

Turbines used for driving the ship's service generators differ from other auxiliary turbines in that they usually operate on superheated steam. These turbines are usually of the axial-flow, multistage, geared type. The turbine exhausts to a separate auxiliary condenser which has its own circulating pumps, condensate pumps, and air ejectors. Cooling water for the condenser is provided by the auxiliary circulating pump through separate injection and overboard valves.

Superheated steam is supplied to the ship's service generator turbine from either the main steam line or a special turbogenerator line which leads directly from the boiler. Aboard some ships, the turbine may—in the event of condenser casualty—be discharged directly to the atmosphere, or to the main condenser when the main plant is in operation.

Because the ship's service generator must supply electricity at a constant voltage and frequency (hertz), the turbine must run at a constant speed even though the load will vary greatly. Constant speed is maintained by a speed-regulating governor. This turbine also has an overspeed trip, which closes the throttle if the turbine overspeeds or if the speed-regulating governor fails to function; a back-pressure trip, which closes the throttle if excessive exhaust pressure is built up; and a manual trip which may be used to close the throttle quickly if there is damage to the turbine or to the generator. The shaft glands of the ship's service generator turbine are supplied with gland-sealing steam; the system is similar to that used for main propulsion turbines. Other auxiliary turbines in naval use are seldom, if ever, provided with gland-sealing systems.

DIESEL-DRIVEN GENERATORS

Practically all Navy ships are equipped with diesel-driven emergency generators. Diesel engines, rather than turbines and reduction gears, are most suitable for this application because of their quick starting ability. Emergency generators furnish power directly to

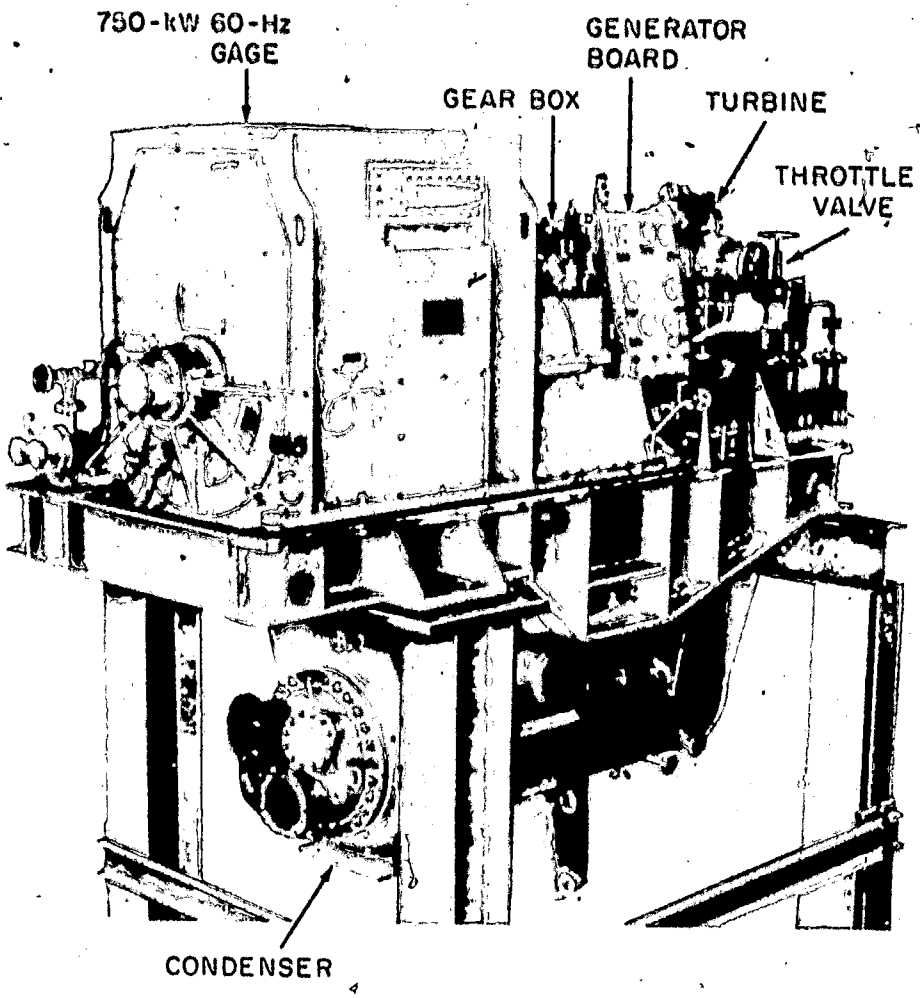

139.57

Figure 11-4.—750-kW Turbine-Generator Set.

the radio, radar, gunnery, and vital machinery equipment, through an emergency switchboard and automatic bus transfer equipment.

The typical shipboard plant consists of two diesel emergency generators, one forward and one aft, in spaces outside the enginerooms and firerooms. Each emergency generator has its individual switchboard and switching arrangement for control of the generator and for distribution of power to certain vital auxiliaries and a minimum number of lighting fixtures in vital spaces.

The capacity of the emergency unit varies with the size of the ship on which the unit is installed. Regardless of the size of the installation, the principle of operation is the same.

Detailed information concerning the operation of diesel-driven generators can be obtained from appropriate manufacturers' technical manuals.

SWITCHBOARDS

Switchboards consist of panels for mounting the various measuring instruments, indicating devices, and protective and regulating apparatus required to control the operation of the generators and the distribution of electric

power. A distribution switchboard is provided for each generator or group of generators.

Most Navy ships have from two to four ship's service generator switchboards; small ships, such as destroyers, have two switchboards, whereas large ships may have as many as four to eight switchboards. In many cases two or more generators can feed one switchboard.

Most switchboards have the equipment grouped to form a number of units. Each unit is complete. Bus bars are used to tie each unit together to form a switchboard. There are generator, bus tie, power distribution, and lighting distribution units. Each of these complete units has a separate front panel on the switchboard. Newer ships have transformers throughout the ship with lighting distribution panels instead of lighting distribution units. A number of these units mounted on a common base comprise a section. A switchboard may consist of a single section or of several sections, each complete in itself but connected by cables to form a switch-gear group. This arrangement of several small sections lessens the danger of shock, localizes damage from fire, and provides for easy removal of damaged sections for repairs or replacement.

The two types of switchboard construction are live front and dead front. The live front switchboard is found only on very old ships where low-voltage and d-c distribution systems are used, and as interior communications switchboards. The more common switchboard, shown in figure 11-5, is used for all a-c distribution systems.

(NOTE: The terminals are accessible on the live front type. In the dead front switchboard, the meters and operating handles are mounted on the panels, and all live parts are located within the panels.)

GENERATOR AND DISTRIBUTION SWITCHBOARDS

Ship's service 450-volt, a-c switchboards are all of the dead front type. These switchboards are built to provide efficient and safe operation of the electrical system. A typical power distribution system in a destroyer consists of four generators—two forward and two aft— and two distribution switchboards, one with each two generators. All the necessary apparatus for controlling each generator and for distributing its power is incorporated in its associated switchboard.

The forward ship's service generators and distribution switchboard are the control switchboard. It is provided with instruments and controls for the after generators. These instruments and controls are necessary to parallel the generators and equalize the load. An automatic voltage regulator is mounted on each switchboard to control the generator field excitation and to maintain a constant a-c generator voltage throughout the normal changes in load.

Two emergency diesel generator sets provide electric power for limited lighting and for vital auxiliaries in the event of failure of the ship's service power. One unit is located in the forward emergency generator room and the other unit is located in the after emergency generator room. The forward emergency switchboard is normally energized from the forward ship's service switchboard, and the after emergency switchboard is energized from the after ship's service switchboard during normal operation.

D-c power distribution systems are in use on some older ships that have large deck machinery loads. These systems, which consist of the ship's service generator and distribution switchboards, are similar to the a-c systems. On new ships, d-c power is provided at the load with rectifiers when required.

COMPONENTS OF A SWITCHBOARD

Each switchboard includes one or more units, a bus tie unit, a power distribution unit, lighting distribution units or transformers, and lighting distribution panels. Large circuit breakers connect ship's service and emergency generators to the power distribution system.

They are also used on bus ties and shore connection circuits. In accordance with the electric load, smaller circuit breakers are also installed on switchboards and on distribution panels throughout the ship.

Circuit Breakers

Circuit breakers (fig. 11-6) equipped with individual automatic tripping devices are used to isolate faulty circuits and to serve as overload protection. These circuit breakers are a part of the switchboard equipment. Circuit breakers, rather than fuses, are used in circuits that require large amounts of current. They can be operated for an indefinite period, and their action can be controlled with greater accuracy.

Overload circuit breakers open automatically when the current (load) on the circuit exceeds a preset value for which the circuit breaker is set.

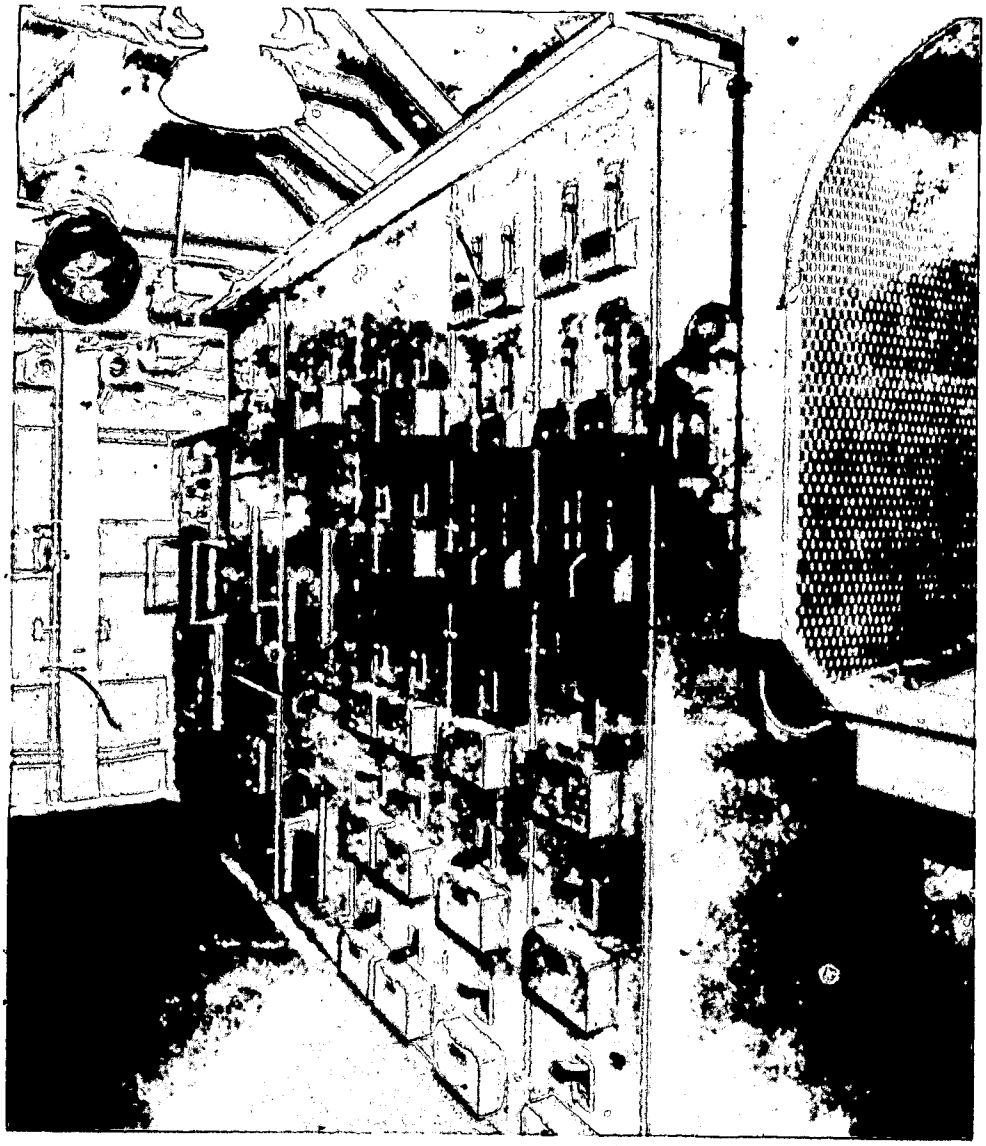

77.254

Figure 11-5.—Ship's service switchgear group No 1S section 1SB.

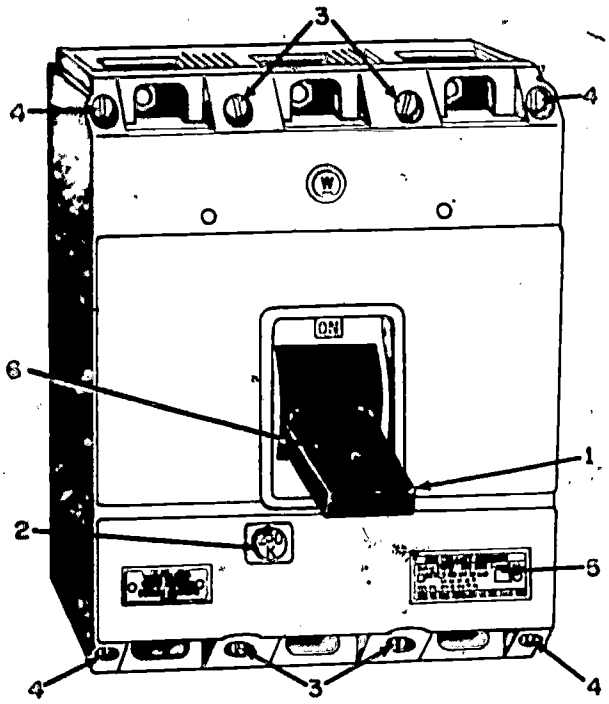

Figure 11-6.—Circuit breaker.

Circuit breakers used with shipboard equipment are not susceptible to tripping under successive heavy shocks, such as those caused by gunfire. Circuit breakers are used on all rotating electrical machinery and feeders to vital loads, such as gunmounts and searchlights.

In addition to overload relays, reverse power trip relays are provided on a-c generator circuit breakers. These units are designed to open in the event of a power reversal. The units are mounted within the generator switchboard.

Voltage Regulators

Voltage regulators, installed on the associated switchboards, are used for a-c ship's service and emergency generators. The voltage regulator maintains the generator voltage within specified limits. The switchboard operator can adjust (set) the voltage of the generator at any value within nominal limits. When additional loads are applied on the generator, there will be a tendency for the voltage to drop. The automatic regulator keeps the voltage of the generator constant at various loads.

Indicating Meters

All the important switchboards aboard ship are provided with electrical meters of various types. Electrical meters, somewhat like gages and thermometers, show the operator what is taking place in the electrical machinery and systems. Electrical meters are of two general types: installed meters (on switchboards) and portable meters. Some of the common meters that are used on switchboards are voltmeters, ammeters, kilowatt meters, and frequency meters.

ELECTRIC MOTORS

Electric motors are used aboard ship to operate guns, winches, elevators, compressors, pumps, ventilation systems, and other auxiliary machinery and equipment. There are many reasons for using electric motors: they are safe, convenient, easily controlled, and easily supplied with power.

A motor changes electrical energy, produced by the generators, into mechanical energy. There are important reasons for changing mechanical energy to electrical energy and back again to mechanical energy. One reason is that electric cables can be led through decks and bulkheads with less danger to watertight integrity than steam pipes or mechanical shafts. Another reason is that damage to a steam line can cause steam to escape, resulting in personnel injury. If an electric cable is used and a fault occurs, the circuit breaker protecting the cable opens automatically.

D-C AND A-C MOTORS

The a-c motor, smaller and requiring less maintenance than the d-c motor, is extensively used by the Navy. The d-c motor, which is built

like a d-c generator, is used mostly aboard auxiliary ships and some small ships.

Most of the a-c motors used aboard ship are 3-phase, 60-hertz, 450-volt motors. The induction motor is commonly used by the Navy. Although most a-c motors have one speed, a number of motors with two speeds, such as those on ventilation systems, are installed aboard ships.

MOTOR CONTROLLERS

Controlling devices are used to start, stop, speed up, or slow down motors. In general, these controllers are standard equipment aboard ship and are either manual, semiautomatic, or automatic. They are dripproof and shock resistant. In some installations the controllers are operated by remote control, with the switch at a convenient location.

These motor control devices (controllers, master switches, and electric brakes) protect the equipment to which they are connected. Controllers provide protective and governing features for every type of shipboard auxiliary. To govern the controllers themselves, master switches of various types are installed. Electric brakes are used to bring a load to rest, or to hold it at rest, when electric power to the motor is cut off. Aboard ship, electric brakes are used primarily on hoisting and lowering equipment such as cranes, winches, and windlasses.

Most controllers function simply to start or to stop auxiliary machinery, but some controllers also provide for reversal of direction or multispeed operation. Motor controllers, sometimes called starters, have overload protective devices to prevent burning out the motor. Most controllers cut out automatically when the electric power fails, and they have to be restarted manually.

BATTERIES

Aboard ship, batteries are one of the sources of electricity for emergency and portable power. Dry cell batteries are used primarily for flashlights, hand lanterns, and test equipment. Storage batteries are also used for emergency equipment aboard ship, for ship's boats, and forklifts. The storage battery is used as a source of electrical energy for emergency diesel generators, gyrocompasses, and emergency radio.

Since you may act as a boat engineer, you should be familiar with safety precautions to be observed when you work around batteries. Batteries must be protected from salt water, which can mix with the electrolyte (acid solution) and give off poisonous fumes. Salt water in the electrolyte also sets up a chemical reaction which will ruin the battery. If this ever occurs, notify the electric shop immediately.

Storage batteries, when being charged, give off a certain amount of hydrogen gas. Battery compartments should be well ventilated to discharge this gas to the atmosphere. Flames or sparks of any kind, including lighted cigarettes, should never be allowed in the vicinity of any storage battery that is being charged. When the battery is low or does not perform properly, the boat engineer should notify the Electrician's Mate (EM) so that the faulty condition can be corrected promptly.

PORTABLE EQUIPMENT

Aboard any ship there will be small electric-powered equipment, such as portable electric drills, hand lanterns, small ventilation blowers, and handtools. SAFETY is wearing rubber gloves and protective safety goggles when you work with metal-cased portable electric tools.

BATTLE LANTERNS

Relay-operated hand lanterns (fig. 11-7A) usually called battle lanterns, are powered by dry cell batteries. Hand lanterns are provided to give emergency light when the ship's lighting systems fail. These lanterns are placed in spaces where continual illumination is necessary, such as machinery spaces, control rooms, essential watch stations, battle dressing stations, and escape hatches. All auxiliary machinery with

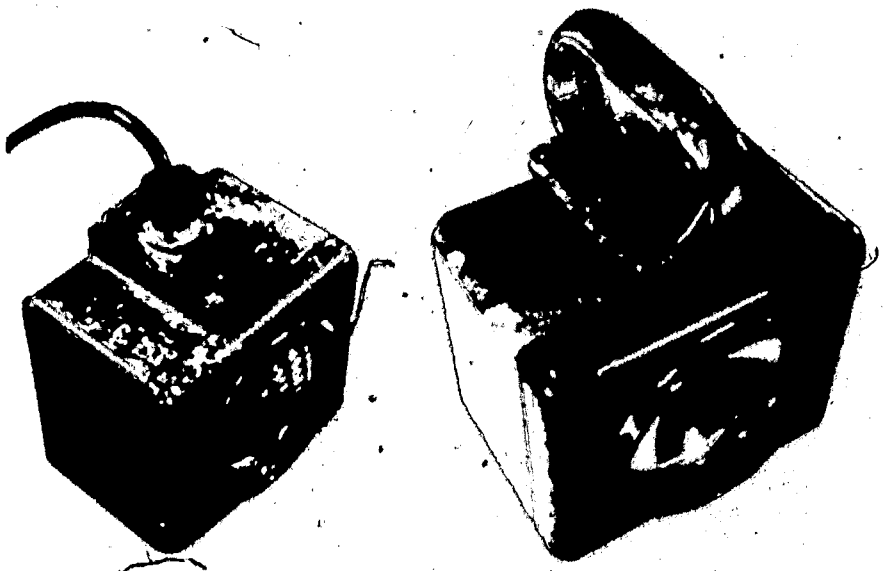

A HAND LANTERN (RELAY OPERATED)

B HAND LANTERN (MANUAL OPERATED)

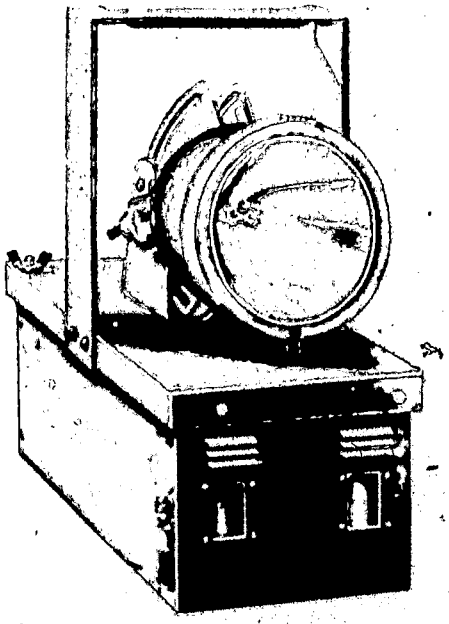

C PORTABLE FLOOD LANTERN

77.47

Figure 11-7.—Special lights.

gage boards should be provided with a battle lantern to illuminate the gage board in the event of a casualty. The battle lantern should not be removed from its mounting bracket except in an emergency. DO NOT use it as a flashlight.

The relay control boxes for battle lanterns are connected to the emergency lighting supply circuit (or to the ship's service lighting circuit) in which the lantern is installed. If power in the circuit fails, the relay opens and the batteries light the lantern.

Hand (battle) lanterns are capable of operating for approximately 10 continuous hours (or the equivalent) before the light output ceases to be useful.

Similar hand lanterns (fig. 11-7B) which are NOT connnected to relays, are installed throughout the ship to provide illumination in stations which are manned occasionally. These lanterns are manually operated. If used in an emergency, the manually operated hand lanterns should always be RETURNED TO THEIR ORIGINAL LOCATION.

SEALED BEAM LIGHTS

Sealed beam lights (fig. 11-7C), a type of flood lantern, are used to give high-intensity illumination in damage control or other emergency repair work. These units consist of a sealed beam light similar to that used for automobiles. The sealed beam light, powered by four small wet cell storage batteries, is mounted in the battery case and fitted with a handle for convenience in carrying. A sealed beam lamp will operate for the equivalent of 3 continuous hours before the battery requires recharging. When the battery is at full charge, the beam has an intensity which is similar to that of the headlight on an automobile. At the end of 3 hours the light output will gradually drop to about one-half its original brilliance. These sealed beam lights are normally stored in the damage control repair lockers.

PORTABLE EXTENSION LIGHTS

Portable extension lights are widely used aboard ship, especially in the engineering spaces.

Only approved extension lights are to be used. Adequate lighting is necessary when maintenance work is being done or when machinery repairs are being made.

The portable extension light and cord should be in good condition. The cord should be free from cuts or damaged areas. The light and cord should be free from moisture, oil, and grease.

Do not lay extension cords across decks or other places where they may be damaged. If possible, cords should be run overhead and tied in place. Also, keep rubber cords away from hot steam piping as well as away from oil and paint. Avoid running an extension cord through a watertight hatch or door.

An extension light should be returned promptly to the tool issue room or electric shop after the work for which it was used has been finished. The light should be clean, dry, and in good condition. Defective extension lights (including lights without guards) should be brought immediately to the electric shop for repairs.

PORTABLE TOOLS

Proper care and precautionary measures should be taken in handling and working with portable tools such as electric drills and grinders. Protective goggles must ALWAYS be worn when tools such as wire brushes and grinders are used.

There is an inherent danger when you work with portable electric tools because of the possibility of electric shock. Electrician's Mates are required to make weekly tests of all portable electrical tools to ensure that they are safe to use. Portable tools in use on Navy ships are provided with a grounded plug and a ground wire connected to the metal part of the tool. Grounded receptacles are installed throughout the ship. The cords for portable electric tools contain three conductors; the third conductor is used to ground the portable tool to the ship. These precautions are taken to prevent dangerous electric shock to operators of portable tools.

SHIPBOARD ELECTRICAL SYSTEMS AND CONNECTIONS

As a Fireman, you should be familiar with the power distribution systems, the lighting

distribution systems, and shore power connections which have been described briefly in this manual. You will find greater detail on this and other shipboard electrical equipment in chapter 9620, *NavShips Technical Manual*.

POWER DISTRIBUTION SYSTEMS

The power distribution system connects the generators, which furnish electric power, to the power-driven equipment installed throughout the ship. From the generator switchboards, a distribution system consisting of feeders, mains, submains, load center panels, and distribution boxes carries power to every part of the ship. The most important auxiliaries are supplied with normal, alternate, and emergency feeders, through automatic bus transfer units, each with a separate source of power. Casualty power systems are installed aboard ship to provide electrical connections when both ship's service and emergency electrical systems are damaged.

LIGHTING DISTRIBUTION SYSTEMS

Lighting distribution systems are necessary not only to light the ship but also to assist personnel in controlling damage. Aboard combatant ships two lighting systems are installed: ship's service lighting and emergency lighting. The ship's service lighting normally supplies all lighting fixtures. Emergency lighting circuits are supplied to vital machinery spaces, the radio room, the combat information center, and other vital spaces. The emergency lighting system receives power from the ship's service generators but, if normal power is lost, the emergency system is automatically cut in on the emergency generators. Lighting distribution systems are similar to power distribution systems, except that they (1) are more numerous, (2) have lower voltages (120V), and (3) have smaller panels and cables.

Lighting distribution requires a variety of panels and distribution boxes to connect their loads with their power supplies. High-voltage feeders from switchboards are stepped down from 450V to approximately 120V by transformers which are connected to distribution panels. Circuits emerging from distribution panels are connected to feeder distribution boxes. The feeder distribution box, which is similar to the power distribution panel, has only a few branch circuits. The distribution boxes carry power directly to the actual load circuits.

SHORE POWER CONNECTIONS

Shore power connections are installed at or near suitable weather deck locations to which portable cables from the shore, or from a ship alongside, can be connected. Power can be supplied through these connections to the switchboard when ship's service generators are not in operation.

ELECTRICAL SAFETY PRECAUTIONS

There are certain safety precautions which should be observed by those who work with or around electrical appliances and equipment.

Following are some of the most common electrical safety precautions which all shipboard personnel are required to follow:

- Do not attempt to maintain or repair electric equipment. Leave the electrical work to the Electrician's Mates and IC Electricians.
- Observe and follow all pertinent instructions and electric warning signs aboard ship.
- Observe all safety precautions regarding portable electric lights and tools. (Rubber gloves and goggles.)
- Remember that 120-volt electricity is very dangerous, especially aboard ship.
- Do not touch or operate an electrical switch which has a warning tag attached to it.
- Do not go behind electrical switchboards.
- Do not touch live electric wires and fittings.
- Do not remove steamtight globes from lighting fixtures.

- Do not remove battle lanterns from their locations.

- Do not use manually operated hand battle lanterns for unauthorized purposes. Each person should have his own flashlight.

- Do not use electric cables to hoist or support heavy weights, and do not use the wireways for storage.

- Do not permit water to get into electrical equipment.

- Remember that a flame, spark, or lighted cigarette can cause a disastrous battery explosion.

- Remember that electrolyte from a storage battery can cause severe burns and can damage equipment and clothing.

- When you repair equipment that is driven by a motor, have an electrician disconnect the circuit and tag it as out of commission.

- Do not start or operate electric equipment when flammable vapors are present.

- Take time to learn the electrical safety precautions that are applicable to your assigned duties and duty station, whether it be the fireroom, engineroom, electric shop, or other duty assignment. (A thorough understanding of electrical safety precautions will help prevent injury to yourself and damage to equipment which you may be called upon to operate.

- If you are ever in doubt about the operating condition of electrical equipment, CALL AN ELECTRICIAN.

CHAPTER 12

INTERNAL COMBUSTION ENGINES

Most of the auxiliary machinery and equipment aboard large Navy ships utilize electric motors as prime movers. This chapter deals primarily with internal combustion engines in which a mixture of air and fuel serves as the working fluid.

Internal combustion engines are used extensively in the Navy, serving as propulsion units in a variety of ships and boats. Also, internal combustion engines are used as prime movers, or energizing units, for auxiliary machinery. In most shipboard installations, internal combustion engines are of the RECIPROCATING type. In relatively recent years, GAS TURBINE engines have also been placed in Navy service as power units. The discussion which follows will deal primarily with reciprocating engines.

RECIPROCATING ENGINES

The internal combustion engines (diesel and gasoline engines) with which you will be working are machines that convert heat energy into mechanical energy. Diesel and gasoline engines are of the reciprocating type.

The general trend in Navy service is to install diesel engines rather than gasoline engines, unless special conditions favor the use of gasoline engines. Small boats used in conjunction with airplane facilities are frequently powered with gasoline engines because the available fuel supply is gasoline. In addition, gasoline engines (P-250 pump) are used some installations because of their small size lack of suitable diesel engines.

IGNITION PRINCIPLES

The gasoline and diesel engines differ principally in that the gasoline engine has a carburetor and a spark ignition system. The fuel and air for the SPARK IGNITION (GASOLINE) ENGINE is mixed in the carburetor. This mixture is drawn into the cylinders where it is compressed and ignited by an electric spark.

The COMPRESSION IGNITION type engine is commonly known as a DIESEL ENGINE. The diesel engine takes in atmospheric air, compresses it, and then injects the fuel into the cylinders. The heat generated by compression ignites the fuel; hence, the term "compression ignition" is used for diesel engines.

OPERATING CYCLE

All reciprocating engines have a definite cycle of operation—atomize the fuel, get it into the cylinders, ignite and burn it, and dispose of the gases of combustion. All reciprocating internal combustion engines operate on either a 2-stroke or a 4-stroke cycle. A stroke is a single up or down movement of the piston, or the distance a piston moves between limits of travel, Each piston executes two strokes for each revolution of the crankshaft. The number of piston strokes occurring during any one series of operations (cycle) is limited to either two or four, depending on the design of the engine.

In 4-STROKE CYCLE engines each piston goes through four strokes and the crankshaft makes two revolutions to compete one cycle. Each piston delivers power during one stroke in four, or each piston makes one power stroke for each two revolutions of the crankshaft.

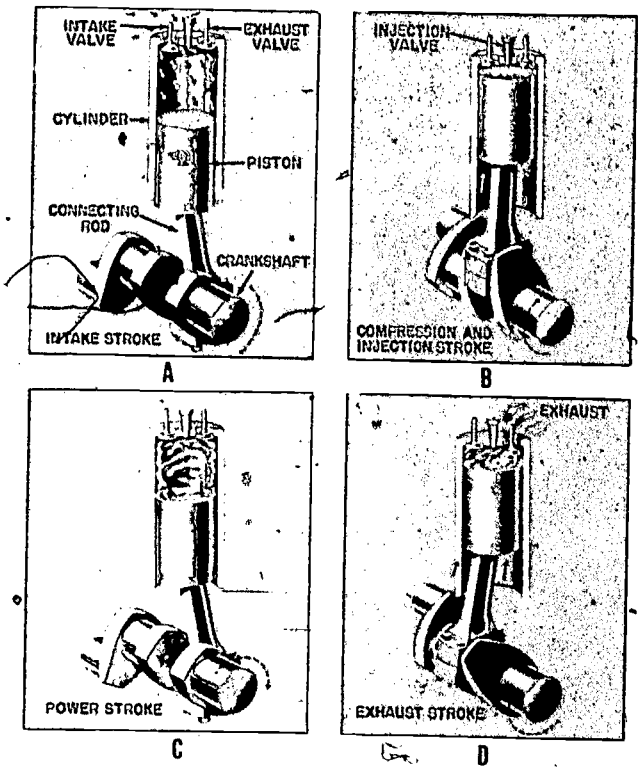

54.19

Figure 12-1.—The 4-stroke diesel cycle.

Let us take one cylinder of a diesel engine and trace its operation through the four strokes that make up a cycle. (See fig. 12-1.) The engine parts shown in this figure include only a cylinder, a crankshaft, a piston and connecting rod, and the intake and exhaust valves. To simplify the diagrams (A through D), the valve-operating mechanism and the fuel system have been omitted.

In part A of figure 12-1 the intake valve is open and the exhaust valve is closed. The piston is moving downward and drawing a charge of air into the cylinder through the open valve. This portion of the cycle during which the piston is moving downward is called the INTAKE STROKE.

When the crankshaft has rotated to the position shown in B of figure 12-1, the piston has moved upward, on the COMPRESSION STROKE, almost to the top of the cylinder. Both the intake and exhaust valves are closed during this stroke. The air which entered the cylinder during the intake stroke is compressed into the small space above the piston. The volume of this air may be reduced to less than 1/16 of what it was at the beginning of the stroke.

The high pressure, which results from this great reduction in volume, raises the temperature of the air far above the ignition point of the oil. When the piston nears the top of the compression stroke, the charge of fuel is forced into the cylinder through the injection valve. The air which has been heated by compression ignites the fuel.

During the POWER STROKE, indicated in C of figure 12-1, the inlet and exhaust valves are both closed. The increase in temperature resulting from the burning fuel greatly increases the pressure on top of the piston. This increased pressure forces the piston downward and rotates the crankshaft. This is the only stroke in which power is furnished to the crankshaft by the piston.

During the EXHAUST STROKE, shown in D of figure 12-1, the exhaust valve is open and the intake valve remains closed. The piston moves upward, forcing the burned gases out of the combustion chamber through the exhaust valve. This stroke, which completes the cycle, is followed immediately by the intake stroke of the next cycle, and the sequence of events continues to repeat itself.

The 4-stroke cycle gasoline engine operates on the same mechanical, or operational, cycle as the diesel engine. In the gasoline engine, the fuel and air are mixed in the carburetor, and the mixture is drawn into the cylinders through the intake valve. The fuel-air mixture is ignited near the top of the compression stroke by an electric spark which passes between the terminals of the spark plug.

The principal difference in the cycles of operation for diesel and gasoline engines involves the admission of fuel and air to the cylinder. While this occurs as one event in the operating cycle of a gasoline engine, it involves two events

in diesel engines. There are six main events taking place in the diesel cycle of operation (intake of air, compression of air, injection of fuel, ignition and combustion of charge, expansion of gases, and removal of burned gases), and five main events in the cycle of a gasoline engine (fuel is not injected in a gasoline engine).

TWO-STROKE CYCLE diesel engines are widely used by the Navy. The Navy uses some gasoline engines that operate on the 2-stroke cycle; they are used principally to drive portable pumps.

Every second stroke of a 2-stroke cycle engine is a power stroke. The strokes between are compression strokes. The intake and exhaust functions take place rapidly near the bottom of each power stroke. With this arrangement there is one power stroke for each revolution of the crankshaft, or twice as many as in a 4-stroke cycle engine.

The steps in the operation of a 2-stroke cycle engine are shown in figure 12-2. The cylinder shown has an exhaust valve but no intake valve. (Other designs have both intake and exhaust ports and include no valves.) The air enters the combustion chamber through ports (openings) in the cylinder wall; these ports are uncovered by the piston as it nears the bottom of each stroke.

In A of figure 12-2, the piston is moving upward on the compression stroke. The exhaust valve and the intake ports are closed, and the piston is compressing the air trapped in the combustion chamber. At the top of the stroke, with the piston in the position shown in B of figure 12-2, fuel is injected (sprayed) into the cylinder and then ignited by the hot compressed air.

In C of figure 12-2, the piston is moving downward on the power stroke. The exhaust valve is still closed and the increased pressure, resulting from the burning fuel, forces the piston downward and rotates the crankshaft.

As the piston nears the bottom of the power stroke, shown in D of figure 12-2, the exhaust valve opens and the piston continues downward to uncover the intake ports. Air delivered under pressure by a blower or from the crankcase (in a gasoline engine) is forced into the cylinder through the intake ports, and the burned gases

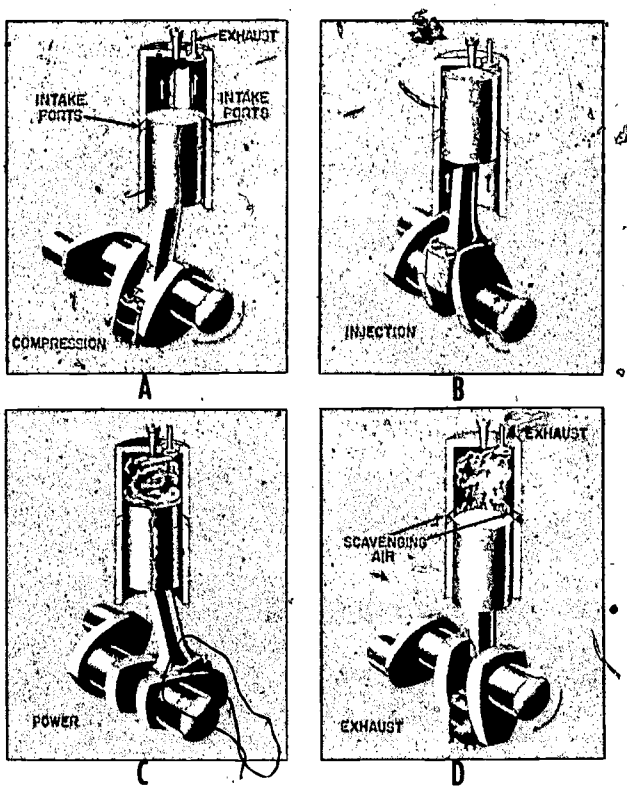

54.20

Figure 12-2.—The 2-stroke diesel cycle.

are carried out through the exhaust valve. This scavenging operation takes place almost instantly and corresponds to the intake and exhaust strokes of the 4-stroke cycle.

You might expect a 2-stroke cycle engine to develop twice as much power as a 4-stroke cycle engine; however, it does not because a certain percentage of the engine's power is required to drive the blower. Nevertheless, 2-stroke cycle diesel engines give excellent service. Small gasoline engines operating on the 2-stroke cycle principle operate satisfactorily, but the larger sizes are less popular.

DIESEL ENGINES

The diesel engines used in small boats look very much like the gasoline engines used in an automobile. Each cylinder has an injector to

admit fuel to the cylinder at the proper time. The injector may also serve as the high pressure pump. Some engines have a high pressure pump with a hydraulic head which resembles a distributor. The lines carry the high pressure fuel to the injector in the same order as the firing order. On the gasoline engine, the carburetor provides the proper mixture of gasoline and air for the cylinder. In most of the 2-cycle gasoline engines in use by the Navy, the oil is mixed with the gas to provide lubrication for the bearings and pistons. Most boat engines have a sea water heat exchanger instead of the conventional radiator. Although different makes and models of diesels vary widely, they all have the same essential parts.

POWER SYSTEM

The main working parts of the engine transmit power from the cylinders to the driveshaft. These parts include the cylinders, pistons, connecting rod, and the crankshaft. The cylinders of most marine engines are contained in a single block or crankcase of iron. Each cylinder is lined with a special hardened steel sleeve called a cylinder liner. The upper end of the cylinder is covered by a cylinder head.

The pistons are connected to the crankshaft by connecting rods, which transmit power from the pistons to the crankshaft and convert their reciprocating motion to the rotary motion of the crankshaft. The rods are joined to the pistons by piston pins (wrist pins) and are connected to the crankshaft by connecting rod bearings. (See fig. 12-3.) Rings on each piston provide a seal between the piston and the cylinder wall. As the piston moves up and down, the rings press against the cylinder wall, thus preventing the air or gases from passing down into the crankcase or the oil in the crankcase from working up past the rings. In addition to the pressure of the rings, compression and combustion pressure between the ring and piston push the rings against the cylinder wall.

The rotating force of the crankshaft is used to drive such items as reduction gears, propeller shafts, generators, and pumps. During three of the strokes of a 4-stroke cycle engine, the rotary motion of the crankshaft is moving the piston up and down.

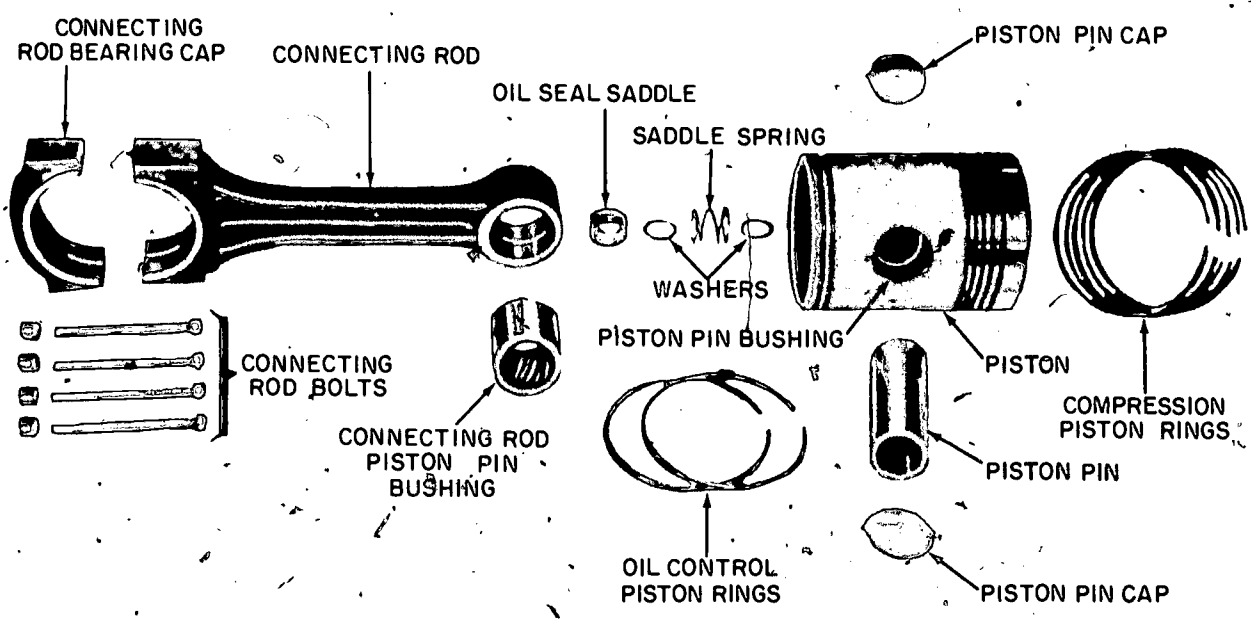

75.59

Figure 12-3.—Piston and connecting rod parts.

VALVE MECHANISM

The valves are opened by the action of a camshaft, driven by the crankshaft through a train of gears, or a gear and chain-drive mechanism. The camshaft extends the length of the engine and carries one or more cams for each cylinder. The shaft is cylindrical with irregular-shaped cams. Each cam is circular on one end and has a LOBE (NOSE) on the other end which gives that end an egg-shaped appearance as shown in figure 12-4B. The circular part of the cam is called the cam flat or base circle.

The camshaft gives an intermittent reciprocating motion as it rotates. A cam follower or roller, riding on the rotating cam, is lifted each time the lobe or cam nose comes around.

The valve mechanism of a 2-stroke cycle diesel engine is shown in the cutaway views that appear in figure 12-4. This engine has two exhaust valves which are opened at the same time by the action of a single cam. They make a tight fit in the exhaust openings (ports) in the cylinder head and are held in the closed position by the compression of the valve springs. The rocker arm and bridge transmit the reciprocating motions of the cam roller to the valves.

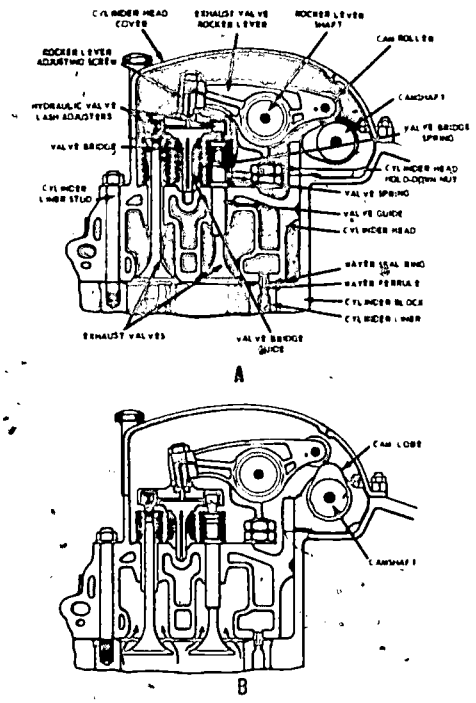

139.46

Figure 12-4.—Cutaway of a cylinder head, showing the valve-operating mechanism.

In figure 12-4A the cam roller is riding on the base circle of the cam and the valves are closed. As the camshaft rotates, the cam lobe or nose rides under the roller and raises it to the position shown in figure 12-4B. When the roller is lifted, the arm rotates around the rocker shaft and the opposite end of the arm is lowered. This action pushes the bridge and valves down against the pressure of the valve springs and opens the valve passages.

On some types of engines, the camshaft is located near the crankshaft. In these designs the action of the cam roller is transmitted to the rocker arm by a push rod. In some engines, the valves are inverted and are located in recesses at the side of the cylinders. In this arrangement the valve stems may ride directly on the cams, or they may be separated by a short steel shaft and roller called a tappet assembly.

The camshaft must be timed with the crankshaft so that the lobes will open the valves in each cylinder at the correct instant in the operating cycle. In the 2-stroke cycle the exhaust valves are opened for only a short time near the bottom of the power stroke to permit the burned gases to escape. Since the cycle is completed in one revolution, the camshaft rotates at the same speed as the crankshaft.

The 4-stroke cycle engine has an intake and an exhaust valve in every cylinder. Each valve is operated by a separate cam. The intake valve is held open during the intake stroke, and the exhaust valve is opened during the exhaust stroke. Since two revolutions of the crankshaft are necessary to complete a 4-stroke cycle, the camshaft of these engines turns only half as fast as the crankshaft.

AIR SYSTEM

In the 4-stroke cycle engine, the air enters the cylinders through the intake valve. As each

piston moves downward on the intake stroke, the volume in the combustion chamber increases and the pressure decreases. The normal atmospheric pressure then forces the air into the cylinder through the intake valve.

Since the 2-stroke cycle engine does not go through an intake stroke, a means must be provided to force air into the cylinders. The air enters through intake ports, uncovered when the piston approaches the bottom of the power stroke. (See fig. 12-5.) Since the exhaust valves are open when the intake ports are being uncovered, the incoming air forces the burned gases out through the exhaust valves and fills the cylinder with a supply of fresh air.

On the compression stroke, the exhaust valves are closed, the intake ports are covered, and the air is trapped in the cylinder. The rising piston compresses the air and raises its temperature. By the time the piston reaches the top of the stroke, the volume of the combustion chamber has been greatly reduced. The relation between the volume of the cylinder with the piston at the bottom of its stroke and the cylinder volume with the piston at the top of its stroke is called the COMPRESSION RATIO. Compressing the air to 1/16 of its original volume would represent a compression ratio of 16 to 1.

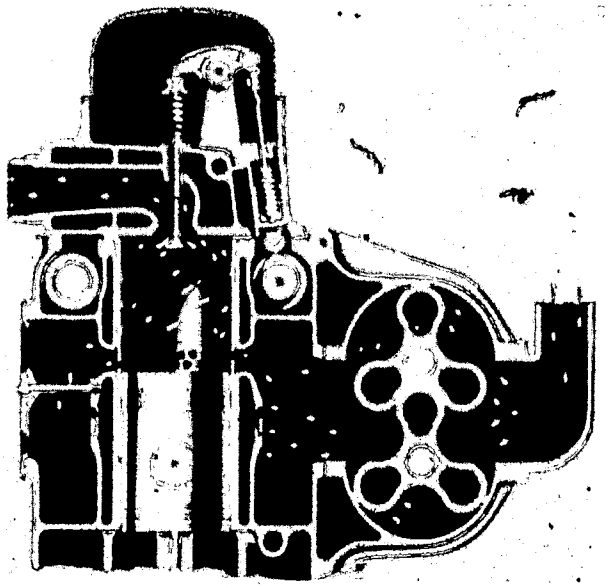

75.161

Figure 12-5.—A 2-stroke-cycle engine cylinder with the piston at the bottom of the power stroke.

As the compression ratio is increased, the temperature of the air in the cylinder increases. Current gasoline engines operate at compression ratios between 8 to 1 and 11 to 1, but compression ratios of diesel engines range between 12 to 1 and 16 to 1. This means that on the compression stroke of a diesel engine the air is compressed to a range of 400 to 600 psi, which results in a temperature ranging from 700° to 800°F. However, when the fuel is injected into the cylinder and begins to burn, the pressure may increase to more than 1500 psi and the temperature may rise as high as 1800°F.

FUEL SYSTEM

The fuel system of the diesel engine draws fuel oil from the service tank and injects it into the engine cylinders. Figure 12-6 shows the units found in a typical fuel system of the unit injector type. The fuel pump draws the fuel oil from the tank through a primary filter and delivers it under low pressure to the injector by way of the secondary filter. The injector, operated by a rocker arm, meters, pressurizes, and atomizes the fuel as it is injected into the combustion chamber. The outlet line carries the excess fuel oil from the injector back to the fuel tank. In some installations, a transfer pump is installed between the tank and the primary filter. In other installations, the injection pump and injection nozzles are separate units instead of a combined unit, as shown in figure 12-6.

A diesel engine will not operate efficiently unless clean fuel is delivered to the injector or injection nozzles. As the fuel oil is pumped into the fuel tanks, it is strained through a fine mesh screen. The larger particles of the solids suspended in the fuel are trapped in the primary screen. The secondary filter separates the finer particles of foreign matter which pass through the primary filter screen. The final filtering takes place within the injector. Most filters have a drain plug for removing the water, sludge, and other foreign matter. The filter should be drained once each day.

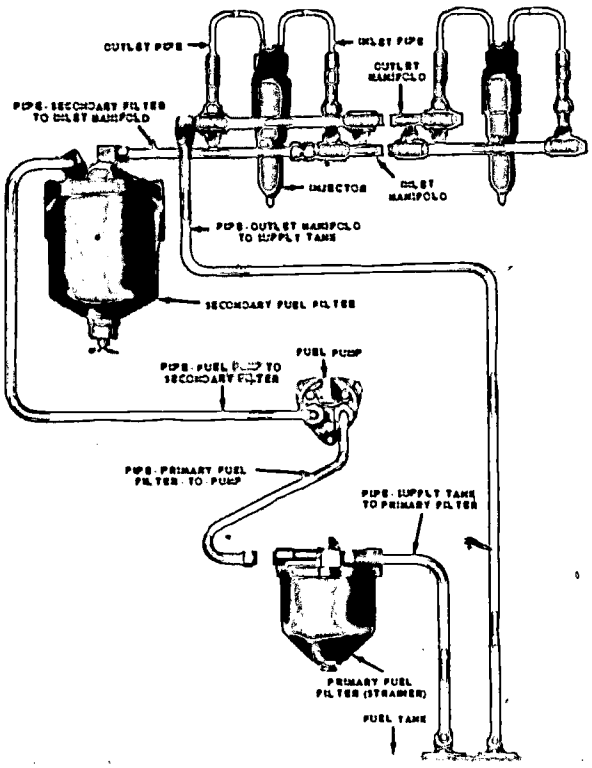

2.67X

Figure 12-6.—The fuel supply system of a General Motors portable diesel engine.

There are many methods of fuel injection and just as many types of injection pumps and nozzles. The unit injector shown in figure 12-6 consists basically of a small cylinder and a plunger, and extends through the cylinder head to the combustion chamber. A cam, located on the camshaft adjacent to the cam that operates the exhaust valves, acts through a rocker arm and depresses the plunger at the correct instant in the operating cycle.

When the injector plunger is depressed, a fine spray of fuel is discharged into the cylinder, through small holes in the nozzle. The amount of fuel injected on each stroke of small boat engine fuel pumps is very small. The smooth operation of the engine depends to a large extent on the accuracy with which the plungers inject the same amount of fuel into every cylinder.

The amount of fuel injected into the cylinders on each stroke is controlled by rotating the plungers of a unit injector. The throttle, which regulates the speed of the engine, is connected to the injectors through a suitable linkage. A change in the throttle setting rotates the plungers and varies the amount of fuel injected into the cylinders on each stroke.

LUBRICATION SYSTEM

The lubrication system of an internal combustion engine is very important. If the lubricating system should fail, not only will the engine stop but also many of the parts are likely to be damaged beyond repair. Therefore, when lubrication failure occurs, the engine can seldom be run again without a major overhaul.

The lubricating system delivers oil to the moving parts of the engine to reduce friction and to assist in keeping them cool. Most diesel and gasoline engines are equipped with a pressure lubricating system which delivers the oil under pressure to the bearings and bushings and also lubricates the gears and cylinder walls. The oil usually reaches the bearings through passages drilled in the framework of the engine. The lubricating system of a typical diesel engine is shown in figure 12-7.

Many methods of lubricating the individual parts of each type of engine are in use in the different engine models. Generally speaking, the oil is fed from the main gallery through individual passages to the main crankshaft bearings and one end of the hollow camshaft. All the other moving parts and bearings are lubricated by oil drawn from these two sources. The cylinder walls and the teeth of many of the gears are lubricated by oil spray thrown off by the rotating crankshaft. After the oil has served its purpose, it drains back to the sump to be used again.

The oil pressure in the line leading from the pump to the engine is indicated on a Bourdon-type pressure gage. A temperature gage in the return line provides an indirect method for indicating variations in the temperature of the engine parts. Any abnormal drop in pressure or rise in temperature should be investigated at

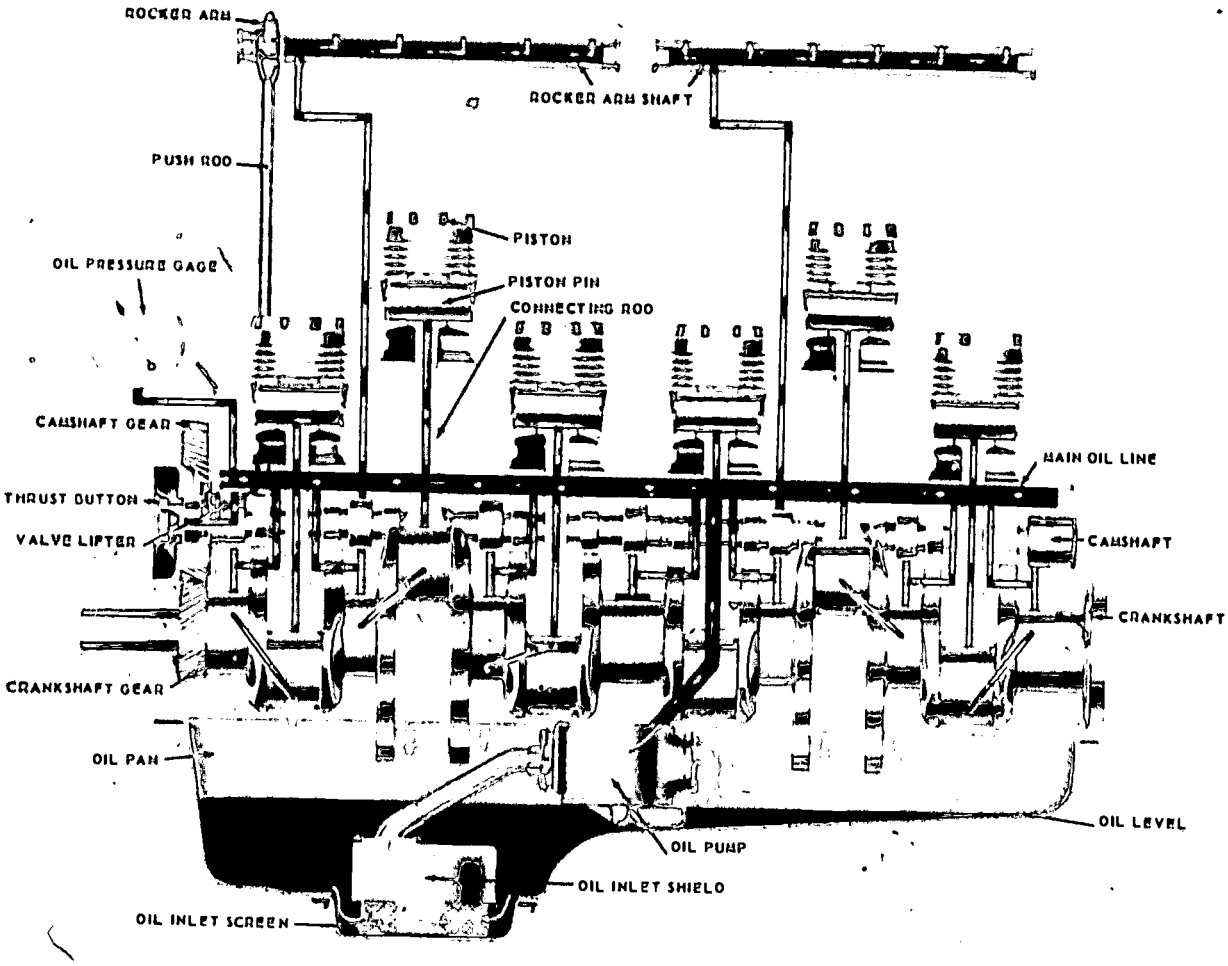

29.96

Figure 12-7.—Basic units and oil passages of a pressure feed lubrication system.

once. It is advisable to secure the engine until the trouble has been located and corrected.

All of the engine parts are lubricated with oil delivered by the gear-type oil pump. This pump takes suction through a screen from an oil pan or sump. From the pump, the oil is forced through the oil strainer and the oil cooler into the main oil gallery. This gallery extends the length of the engine and serves as a passage and reservoir from which the oil is fed to the main bearings.

Constant oil pressure, throughout a wide range of engine speeds, is maintained by the pressure relief valve which allows the excess oil to flow back into the sump. All of the oil from the pump passes through the strainer, unless the oil is cold and heavy, or if the strainer (or oil cooler) is clogged. In such cases, the bypass valve is forced open and the oil flows directly to the engine. Part of the oil fed to the engine is returned through the filter, which removes flakes of metal, carbon particles, and other impurities.

COOLING SYSTEM

Diesel engines are equipped with a water-cooling system to carry away the excess

heat produced in the engine cylinders. The water is circulated through water jackets in the cylinder walls and passages that surround the valves in the cylinder head.

Either fresh water or sea water may be used for cooling. In some engines the sea water is circulated through the engine and then discharged overboard. In other types, fresh water is circulated through the engine and then through a heat exchanger. Sea water is circulated through this exchanger and cools the fresh water. An advantage of the fresh water system is that it keeps the water passages cleaner and thus provides better cooling and allows the engine to operate at higher temperatures.

STARTING SYSTEMS

There are three types of starting systems used in internal combustion engines—electric, hydraulic, and pneumatic.

As a Fireman you will probably have more contact with the electric starting system than you will with the other two types. Most, if not all, lifeboats aboard ships use an electric starter to start the engine.

Depending on ship type, the emergency generator, whether it be diesel or gas turbine, is started by either an electric starter or penumatic starter. Main propulsion diesels and gas turbines are usually pneumatic starter systems (air start).

Electric starting systems use direct current because electrical energy in this form can be stored in batteries and drawn upon when needed. The battery's electrical energy can be restored by charging the battery with an engine-driven generator.

The main components of the electric starting system are the storage battery, the starting motor, the generator, and the associated control and protective devices. The storage battery is described in detail in *Basic Electricity*, NavPers 10086-B.

Electric Starting Motors

The starting motor for diesel and gasoline engines operates on the same principle as a direct current electric motor. The motor is designed to carry extremely heavy loads but, because it draws a high current (300-665 amperes), it tends to overheat quickly. To avoid overheating, NEVER allow the motor to run more than 30 seconds at a time. Then allow it to cool for 2 or 3 minutes before using it again.

To start a diesel engine, you must turn it over rapidly to obtain sufficient heat to ignite the fuel. The starting motor is located near the flywheel, and the drive gear on the starter is arranged so that it can mesh with the teeth on the flywheel when the starting switch is closed. The drive mechanism must function to (1) transmit the turning power to the engine when the starting motor runs, (2) disconnect the starting motor from the engine immediately after the engine has started, and (3) provide a gear reduction ratio between the starting motor and the engine. (The gear ratio between the driven pinion and the flywheel is usually about 15 to 1. This means that the starting motor shaft rotates 15 times as fast as the engine, or at 1,500 rpm, to turn the engine at a speed of 100 rpm.)

The drive mechanism must disengage the pinion from the flywheel immediately after the engine starts. After the engine starts, its speed may increase rapidly to approximately 1,500 rpm. If the drive pinion remained meshed with the flywheel and also locked with the shaft of the starting motor at a normal engine speed (1,500 rpm), the shaft would be spun at a rapid rate—22,500 to 30,000 rpm. At such speeds, the starting motor would be badly damaged.

Hydraulic Starting Systems

There are several types of hydraulic starting systems in use. In most installations, the system consists of a hydraulic starting motor, a piston-type accumulator, a manually-operated hydraulic pump, an engine-driven hydraulic pump, and a reservoir for the hydraulic fluid.

Hydraulic pressure is obtained in the accumulator by the manually-operated hand pump or from the engine-driven pump when the engine is operating.

When the starting lever is operated, the control valve allows hydraulic oil (under pressure) from the accumulator to pass through

the hydraulic starting motor, thereby cranking the engine. When the starting lever is released, spring action disengages the starting pinion and closes the control valve, stopping the flow of hydraulic oil from the accumulator. The starter is protected from the high speeds of the engine by the action of an overrunning clutch.

The hydraulic starting system is used on some smaller diesel engines. This system can be applied to most engines now in service without modification other than to the clutch and pinion assembly, which must be changed when converting from a left-hand to a right-hand rotation.

Air Starting Systems

Most modern large diesel engines are started by admitting compressed air into the engine cylinders at a pressure capable of turning over the engine. The process is continued until the pistons have built up sufficient compression heat to cause combustion. The pressure used in air starting systems ranges from 250 to 600 psi.

Some larger engines and several smaller engines are provided with starting motors driven by air. These motors are similar to those used to drive such equipment as large pneumatic drills and engine jacking motors. Air starting motors are usually driven by air pressures ranging from 90 to 200 psi.

GASOLINE ENGINES

The main parts of the gasoline engine are quite similar to those of the diesel engine. The two engines differ principally in that the gasoline engine has a carburetor and an electrical ignition system.

The induction system of a gasoline engine draws gasoline from the fuel tank and air from the atmosphere, mixes them, and delivers the mixture to the cylinders. The induction system consists of the fuel tank, the fuel pump, the carburetor, and the necessary fuel lines and air passages. Flexible copper tubing carries the fuel from the tank to the carburetor, while the intake manifold carries the fuel-air mixture from there to the individual cylinders. The fuel-air mixture is ignited by an electric spark.

The CARBURETOR is a device used to send a fine spray of fuel into a moving stream of air as it moves to the intake valves of the cylinders. The spray is swept along, vaporized, and mixed (as a gas) with the moving air. The carburetor is designed to maintain the same mixture ratio over a wide range of engine speeds. The MIXTURE RATIO is the number of pounds of air mixed with each pound of gasoline vapor. A RICH MIXTURE is one in which the percentage of gasoline vapor is high, while a LEAN MIXTURE contains a low percentage of gasoline vapor.

The electrical system of the gasoline engine has the same units as the diesel engine, plus the ignition system. This system is designed to deliver a spark in the combustion chamber of each cylinder at a specific point in that cylinder's cycle of operation. A typical ignition system includes a storage battery, an ignition coil, breaker points, a condenser, a distributor, a spark plug in each cylinder, a switch, and the necessary wiring.

There are two distinct circuits in the ignition system—the primary and the secondary. The primary circuit carries a low-voltage current; the secondary is a high-voltage circuit. The battery, the ignition switch, the ignition coil, and the breaker points are connected in the primary circuit. The secondary circuit, also connected to the ignition coil, includes the distributor and the spark plugs.

The STORAGE BATTERY is usually the 12- and 24-volt type. One terminal is grounded to the engine frame, while the other is connected to the ignition system.

The IGNITION COIL is in many respects similar to an electromagnet. It consists of an iron core surrounded by the primary and secondary coils. The primary coil is made up of a few turns of heavy wire, while the secondary coil has a great many turns of fine wire. In both coils, the wire is insulated, and the coils are entirely separate from each other.

The BREAKER POINTS constitute a mechanical switch connected to the primary circuit. They are opened by a cam which is timed to break the circuit at the exact instant at which each cylinder is due to fire. A condenser is connected across the breaker points to prevent arcing and to provide a better high-voltage spark.

The DISTRIBUTOR, connected to the secondary or high-voltage circuit, serves as a selector switch which channels electric current to the individual cylinders. Although the breaker points are connected in the primary circuit, they are often located in the distributor case. The same drive shaft operates both the breaker points and the distributor.

The SPARK PLUGS, which extend into the combustion chambers of the cylinders, are connected by heavy insulated wires to the distributor. A spark plug consists essentially of a metal shell that screws into the spark plug hole in the cylinder, a center electrode embedded in a porcelain cylinder, and a side electrode connected to the shell. The side electrode is adjusted so that the space between it and the center electrode is approximately 0.025 inch. When the plug fires, an electric spark jumps across the gap between the electrodes.

When the engine is running, the electric current in the primary circuit flows from the battery through the switch, the primary winding in the ignition coil, the breaker points, and then back to the battery. The high voltage is produced in the secondary winding in the ignition coil and flows through the distributor to the individual spark plugs and back to the ignition coil through the engine frame. It is interesting to note that the high voltage, which jumps the gap in the spark plugs, does not come from the battery but is produced in the ignition coil.

The ignition coil and the condenser are the only parts of the ignition system which require an explanation. The soft iron core and the primary winding function as an electromagnet. The current flowing through the primary winding magnetizes the core. This same core and the secondary winding function as a transformer. Variations in the primary current change the magnetism of the core which, in turn, produces high voltage in the secondary winding.

With the engine running and the breaker points closed, a low-voltage current flows through the primary circuit. When the breaker points open, this current is interrupted; this produces a high voltage in the secondary circuit. The electricity that would otherwise arc across the breaker points, as they are separating, now flows into the condenser.

The principal purpose of the condenser is to protect the breaker points from being burned. The condenser also aids in obtaining a hotter spark.

The starting system of the gasoline engine is basically the same as that of the diesel engine. The generator keeps the battery charged and provides the current to operate the lights and other electrical equipment. The starter motor draws current from the battery and rotates the flywheel and crankshaft for starting.

The electrical system usually requires about 90 percent of the routine maintenance performed on gasoline engines. You should keep the connections tightened and the battery terminals covered with a light coating of petrolatum. Unsatisfactory operation can usually be traced to either dirty fuel or fouled spark plugs. If the fuel is strained before it is put in the tank, and if the tank is filled each time the engine is secured, most of the fuel difficulties will be eliminated. A fouled plug can be removed and cleaned by wire brushing or sand blasting.

You will find detailed information on spark ignition systems in *Engineman 3 & 2*, NavPers 10541-B.

GAS TURBINE ENGINES

Until recently, the application of the gas turbine engine to marine use in the Navy has been experimental. Experiments have proved that the gas turbine engine can be used to power short-range ships, landing craft, high-speed craft such as PT and air-sea rescue boats, emergency generators, and portable firefighting equipment. The MSB-5 class minesweepers were the first U.S. naval ships to use gas turbine engines on an operational basis. Gas turbine installations aboard the MSB-5 class minesweepers supply power for the generators.

In the past few years several classes of ships have been built, or are under construction, which are totally gas turbine. These ships are of the size of the light cruiser and large DLG class

ships. Several other types of ships which are gas turbine-powered are at various stages of development.

As service experience has been gained, the number of gas turbines in use has increased. The following discussion deals with a comparison of gas turbines and reciprocating engines, the advantages and disadvantages of the gas turbine engines and their principal parts, or components.

COMPARISON OF GAS TURBINES AND RECIPROCATING ENGINES

The gas turbine is similar to reciprocating engines in that air is compressed, a fuel-air mixture is burned, and the gases of combustion are expanded to produce useful power. Engines of the reciprocating type use one component–the cylinder–for compression, combustion, and expansion. Since all three phases take place within one component, the power impulse must occur intermittently or periodically, as the cycle is repeated. This is not true in gas turbine engines; instead, compression, combustion, and expansion take place in three separate components. Air is compressed in one component, combustion takes place in an adjacent burner, and a turbine (or turbines) receives the energy generated by combustion. As does the piston in a reciprocating engine, the turbine transmits the energy of the gases to a shaft which drives a useful load. The three basic components of the gas turbine engine are so arranged and connected that the power output from the turbine is steady and continuous. In brief, the gas turbine engine can be defined as an internal combustion engine that produces power by a continuous and self-sustaining process. An air mass is compressed and then combined with atomized fuel. The resulting mixture is then ignited and burns. The combustion gas expands through one or more turbines which change some of the energy into useful power.

ADVANTAGES AND DISADVANTAGES OF GAS TURBINE ENGINES

In addition to the development of a uniform flow of power output, gas turbine engines have several advantages over reciprocating engines. However, there are certain undesirable features of gas turbine engines. Not all of the desirable or undesirable features of gas turbine engines are discussed here, but some of the more important ones are pointed out. The advantages and disadvantages of the gas turbine engine cannot be listed in order of importance, because the requirements of the engine as a source of power differ in various applications.

Compared with other types of internal combustion engines, the gas turbine engine weighs less, takes up less space, and is normally of simpler design with a smaller number of moving parts. The gas turbine engine develops more power per unit of weight and unit of volume than other engines.

Gas turbine engines start quickly and accelerate rapidly. Some models can develop full power from a cold start in less than one-tenth the time required for a diesel engine in a comparable application. The gas turbine adjusts to varying loads more rapidly than other type engines.

The number of personnel required to operate and maintain a gas turbine engine, and the time required for the training of such personnel are much less than for engines of other types. Only one man is needed to start and operate some gas turbine engines. The simplicity of the operating controls and the automatic safety devices used reduce the time required for training operators.

Compared to a diesel engine, the gas turbine has far fewer components and produces much less vibration at full power. The gas turbine engine has a significant advantage over the gasoline engine in the fuel used. The fuel used in gas turbines presents much less fire hazard than the highly volatile fuel used in gasoline engines.

Even though the gas turbine engine has some advantages over other types of internal combustion engines, it also has some disadvantages, such as a higher rate of fuel consumption and larger components required for air inlet and exhaust.

COMPONENTS OF GAS TURBINE ENGINES

The gas turbine engine uses processes in its operation which are similar to those employed in other types of internal combustion engines. The engine components and the terms used to identify them are considerably different from the parts and terms which are common to the diesel and gasoline engines. Although gas turbine engines vary in design and Navy installations include engines of other manufacturers, much of the discussion in the following section is applicable to all gas turbine engines.

The components of a gas turbine engine may be grouped as (1) parts of the basic engine, (2) engine accessories, and (3) engine systems (fig. 12-8).

Parts of the Basic Engine

The forward (compressor end) section of the engine, where a stream of hot expandable gases is created as a result of continuous compression and combustion, is called the gas producing section. This section consists principally of the compressor, combustion chamber (burners), and turbine wheel(s).

The COMPRESSOR is that part of the engine which draws in air and compresses it by centrifugal force (that force which tends to move something outward from a center of rotation). The compressor consists of a rotating impeller enclosed by a case. The BURNER is that part of the engine in which combustion occurs. It consists of a cylindrical outer shell, perforated inner liner, fuel nozzle, and igniter plug. A NOZZLE is a metal chamber which collects combustion gases from the burners and directs them through fixed vanes or nozzles. The ROTOR is a rotating assembly, consisting of the compressor, an interconnecting shaft, and first-stage turbine wheel.

The section of the engine which changes energy into useful power is known as the power output section. The main parts of this section are the power turbine wheel, exhaust ducts, reduction gear, and output shaft.

The TURBINE WHEEL is a bladed disk which turns when the exhaust gas stream acts upon its blades. A circular metal duct, containing a ring of fixed vanes that form nozzles, which directs the gas flow from the

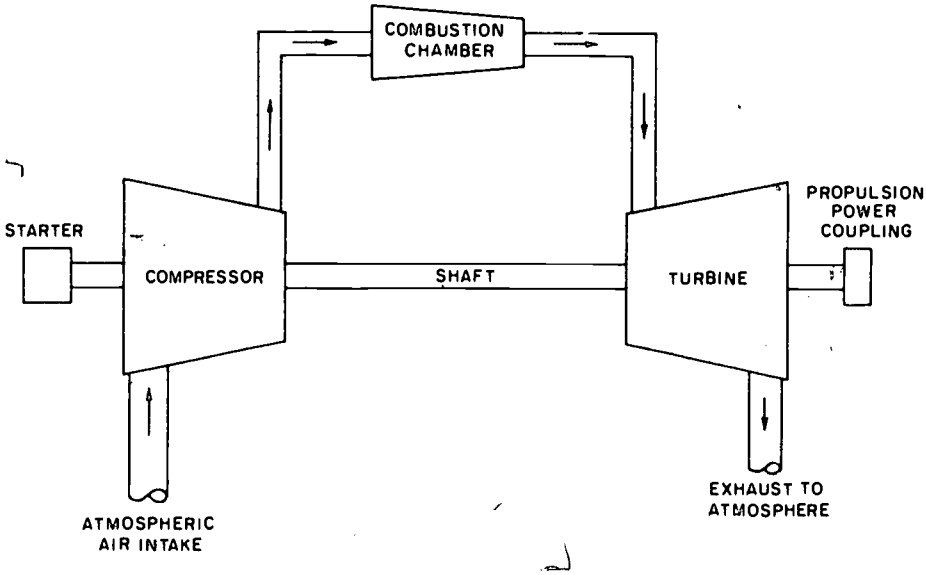

147.135

Figure 12-8.—Schematic diagram showing relationship of parts in single-shaft gas turbine engine.

first-stage turbine to the second-stage turbine is called the INTERSTAGE NOZZLE ASSEMBLY.

Engine Accessories

The main engine components discussed to this point are not the only components required to make a complete engine. Like other types of internal combustion engines, the gas turbine engine includes various accessories.

The parts which constitute the engine accessory group are driven by the engine rotor or by the output shaft. The rotor-driven accessories include the gear-type fuel pump, centrifugal fuel control governor, combination pressure-scavenge oil pump. A centrifugal overspeed switch is driven by the output shaft.

Engine Systems

The principal systems of a gas turbine engine are those which supply fuel for combustion, oil for lubrication, and electricity or air for starting the engine and for the operation of instruments and warning and safety devices.

The engine accessories are usually considered as components of whichever system they affect.

OPERATION OF SMALL BOAT ENGINES

When a ship is at anchor, the officers and crew travel to and from the shore in small boats. As a Fireman, you may be assigned as an engineer on one of these small craft. A coxswain will be in charge of the boat. In some boats there may also be two seamen acting as bow and stern hooks.

You will be responsible for operating the boat's engine. You will receive your orders from the coxswain over the boat's bell system. You should know the bell signals; two sounds for neutral, one for slow ahead, three for reverse, and four calls for full speed in the direction in which you are going. The coxswain will expect you to comply with the bells instantly. You will be required to follow certain safety precautions as a boat engineer. Refer to *Basic Military Requirements*, NavTra 10054-D, chapter 19, for additional information.

DIESEL-POWERED BOAT OPERATION

The actual operation of a small boat diesel might be considered as consisting merely of starting it, regulating the speed, and stopping it. However, there are other factors which should be considered. If you are going to depend on the engine to give reliable service, you must give it a lot of attention. Your first experience in having a casualty halfway between the ship and dock may leave a lasting impression on you, particularly if you happen to have the captain aboard.

When you are assigned to a boat, your first responsibility is to inspect the engine and warm it up. You should check the fuel supply, the lubricating oil, and the cooling system. When you are satisfied that everything is as it should be, you are ready to start the engine.

Starting a diesel engine ordinarily consists of placing the throttle in the idle position, or opening it part way, and pressing the starter button. The engine should start after the starter has turned it over a couple of times. It should be warmed up by running it at low speed until it is up to operating temperature.

While the engine is warming up, you will have a chance to find out whether it is in good running condition. Watch the instrument panel to help you determine the condition of the engine. (See fig. 12-9.) For example, if the oil gage fails to register any pressure, you should stop the engine immediately. The water temperature gage is used as an indication of the temperature of the engine parts. The engine exhaust is usually cooled by sea water; the exhaust discharge should be inspected immediately after starting to determine whether the water pump has suction. If the pump does not have suction, stop the engine and check the cooling system for such troubles as a clogged strainer and closed sea valves. You should check the idling speed by bringing the throttle back to the idling position. The engine should respond

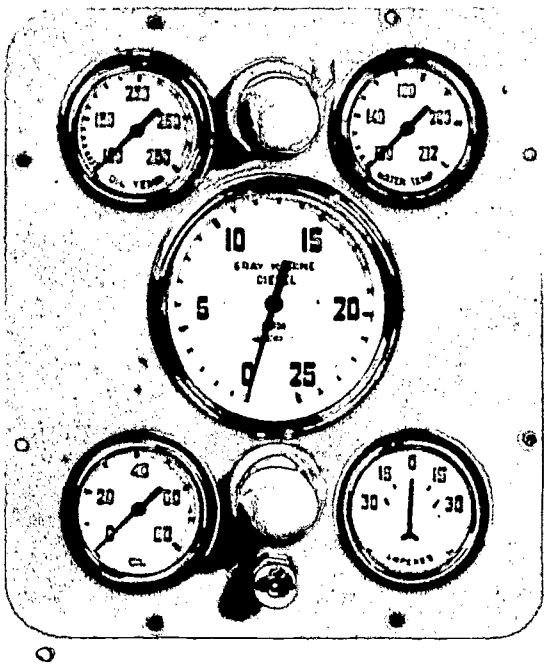

139.48

Figure 12-9.—The instrument panel of a small diesel-powered boat.

normally to changes in the throttle setting, and it should run smoothly after being brought up to operating temperature.

You should know where the fuel- and lube-oil strainer drains are located so that you can get rid of any water that may accumulate in these systems. If lube oil must be added, see that the proper grade approved for that particular engine is used.

The engine can be stopped by merely closing the throttle. You should leave the engine compartment clean and orderly. A report calling attention to any abnormal operating condition that you may have noticed will be a help to the maintenance and servicing crew.

Another important part of your job is TROUBLESHOOTING. Diesel engine failure can usually be attributed either to the fuel system or to improper cooling or lubrication. If the fuel is not reaching the engine cylinders, you can often trace the trouble to an empty fuel tank or an accumulation of water in the strainers. A plugged vent in the fuel tank filler cap will cause a vacuum to form in the top of the tank, and the engine will stop for lack of fuel. Overheating generally results from a lack of either oil or cooling water.

GASOLINE ENGINE OPERATION

The operation of a small boat gasoline engine is similar to that of a diesel engine. Since gasoline from a leak or an open container will vaporize quickly and may form an explosive mixture, additional precautions against fire must be taken. Adequate ventilation must be provided to rid the engine compartment of any combustible vapors which may accumulate. No smoking is permitted in small boats at any time, this is especially important in boats equipped with gasoline engines.

CHAPTER 13

ENGINEERING WATCHES

Throughout the chapters of this training manual you have become acquainted with the organization and ratings of the engineering department. You may be assigned to one of many different types of ships. On these ships you will find that the engineering spaces vary in size and appearance. If you are assigned to a steam-driven ship, you may find the boilers, the main engines, and their associated equipment in one space; or you may find the boilers and their equipment in one space, and the main engines and their equipment in another space. Regardless of the number of boilers and main engines, many of the watches are basically the same. Therefore, the information in this chapter is general in nature and does not apply specifically to any one ship.

This chapter contains information related to some of the watches and the duties that you will be required to perform such as messenger of the watch, sounding and security watch, and cold-iron watch. As you progress and become acquainted with the fireroom or engineroom you will be required to stand other watches under the supervision and instruction of a petty officer. These watches include: (1) for the fireroom—burnerman, blowerman, and checkman; and (2) for the engineroom—lower level watch, upper level watch, evaporator watch, shaft alley watch, and throttle watch.

MESSENGER OF THE WATCH

The messenger of the watch performs a number of important duties which involve a great deal of responsibility. The messenger is usually assigned as telephone talker on the engineering JV circuit during close maneuvering conditions with other ships, when entering or leaving port, or when refueling or replenishing from another ship. Because the JV circuit is used to provide communications between all the engineering spaces, you must know proper telephone procedures; when you talk, speak slowly and in a very distinct manner pronouncing the syllables of each word very clearly. When you receive a message, or are given a message to transmit, be sure to repeat it word for word, exactly as it was given to you; do not engage in any idle chatter.

As the messenger on the watch you will also perform such other duties as the petty officer of the watch may designate. This includes checking all operating machinery to see that it is operating properly, recording temperature and pressure readings in the appropriate logs, and calling the watch relief.

The operating log is an hourly record of operating pressures and temperatures of almost all operating machinery. The log readings include lube oil pressures and temperatures, boiler pressures and temperatures, pump suctions and discharge pressures, and other items of importance to the operation of the engineering plant. You will be required to write and print legibly, to correctly spell common Navy terms and to maintain your logs neatly and accurately. You should become acquainted with proper operating pressures and temperatures so that you will know when a piece of machinery or equipment is not operating properly.

SOUNDING AND SECURITY WATCH

As a Fireman you will be required to stand sounding and security watches. While on this

watch, your primary mission is to look for fire and flooding hazards. On most ships, this watch is from the end of the working day until 0800 the next morning and is also in effect during holiday routine. The watch is particularly needed at these times because there are fewer personnel working aboard the ship and certain spaces that require frequent observation are not under the normal observation of personnel working in or near them. On some ships (particularly the larger ones), sounding and security watches are stood around the clock. When you stand this watch, in addition to looking for fire and flooding hazards, be sure that no fresh water spigots are leaking or left running in heads, washrooms, galleys, and pantries. Another of your responsibilities while on watch is to maintain the proper condition of material readiness by checking all watertight air ports, doors, hatches, scuttles, and all other damage control fittings. Report any irregular condition (change in soundings, violations of material condition, fire hazards, etc.) to your watch supervisor.

SOUNDINGS

A sounding tube is usually made of 1 1/2-inch pipe. The lower end is fitted at a low point in the compartment, tank, or void which the tube serves. The upper end terminates in a flush deck plate which is usually located on the main or second deck; it is closed with a threaded plug or cap.

Tubes are made as straight as possible, but some are necessarily curved. Some sounding tubes, particularly those serving spaces under the enginerooms and firerooms, cannot be extended to the upper decks because of the construction of the ship. These tubes terminate in risers which extend approximately 3 feet above the compartment served; they have gate valve closures.

Soundings are taken with a sound rod or sounding tape, whichever is provided for that purpose aboard ship. Normally, the sounding rod is approximately 6 feet long and is made of 12-inch lengths of 1/2-inch brass or bronze rods. It is lowered with a chain or line. The sounding tape is a steel tape, coiled on a reel suitable for holding while the tape is lowered. The tape is weighted at the end to facilitate lowering into the sounding tube.

HOW TO TAKE A SOUNDING

Water is relatively hard to see on a brass or bronze sounding rod. Before you take a sounding, dry the rod or tape thoroughly and coat it with white chalk. When the chalk becomes wet, it turns to a distinctly visible light brown color. For example, if there is 6 inches of water in a tank when you take a sounding, the light brown color of the chalk will be distinctly visible up to the 6-inch mark; while the remainder of the sounding rod will still be covered with the white chalk. The chalk method is used only where water may be present.

When you have coated the sounding rod with chalk, lower it down the tube until it touches the bottom; immediately draw it back. Do not drop the rod or tape to the bottom, but lower it slowly so that it hits bottom without injuring the rod or tape. If the ship is rolling, try to lower and hoist the rod or tape while the ship is on an even keel. After you have taken the sounding, enter the reading in the sounding log.

COLD-IRON WATCH

When a ship moves alongside a repair ship or a tender, or into a naval shipyard, and is receiving power from these activities, a security and fire watch is usually set by each department. This watch is commonly called the COLD-IRON WATCH.

Each cold-iron watch makes frequent inspections of the area assigned to him and looks for fire hazards or other unusual conditions throughout the area. He sees that no unauthorized persons are in his watch area, that all spaces are cleaned, and that no tools, rags, gear, and the like are left adrift. He keeps bilges reasonably free of water.

The watch makes hourly reports to the officer of the deck as to all existing conditions. Any unusual conditions that do exist are reported to the officer of the deck immediately

so that the department responsible can be notified to take the necessary corrective measures.

In the event that welding or burning is going on in his area, the cold-iron watch sees that a fire watch is stationed. (The fire watch stands by with a CO_2 extinguisher.) If none has been stationed, the cold-iron watch has the work discontinued until the fire watch has been stationed. The cold-iron watch carries out all orders and special orders pertaining to the duties of that watch.

If the ship is in drydock, the cold-iron watch checks all sea valves after working hours to see that the valves are secure or are blanked off. He must see that no oil is pumped into the drydocks at any time. He will not allow any weights, such as fuel oil, feedwater, or potable water, to be shifted without permission of the engineer officer.

The cold-iron watch must be familiar with all regulations, instructions, and safety precautions and must see that these are observed. He gives his relief all information regarding existing conditions, orders, and special orders. If the relieving watch is not satisfied with the conditions, he will not relieve him, but will report for instructions to the petty officer with the day's duty.

BURNERMAN

The burnerman maintains proper steam pressure by cutting burners in or out, or by regulating the fuel oil pressure at the burners. The steam pressure must be held at the working pressure, and as steady as possible. The burnerman must keep a close check for dirty atomizers, by observing their operation and the condition of the fire. He changes the atomizers when authorized by the petty officer in charge of the watch.

The burnerman depends on a steam pressure gage and a superheated steam temperature thermometer for information on conditions within the boiler. In most cases an engine order telegraph (annunciator) is located near the burner front so that the fireroom watch will know what main engine changes are being made.

As engine speed and steam conditions change, the burnerman must rapidly cut burners in or out, as required, to hold the steam pressure steady. During maneuvering in close contact with other ships, and when the ship is entering or leaving port, the burnerman must be constantly alert for large, rapid changes in engine speed.

BLOWERMAN

The blowerman is responsible for operating the forced draft blowers that supply combustion air to the boiler. Although the air pressure in the double casings is affected by the number of registers in use and the extent to which each register is open, it is chiefly determined by the manner in which the forced draft blowers are operated. The opening, setting, or adjusting of the air registers is the BURNERMAN'S job. The control of forced draft blowers is the BLOWERMAN'S job. It is important that the burnerman and the blowerman cooperate with each other because both are concerned with the combustion of the fuel oil.

CHECKMAN

The checkman is responsible for operating the feed stop valve and the feed check valve. The checkman has ONLY ONE JOB—to maintain the proper water level in the boiler. This job requires full attention at all times. When a boiler is being operated manually, the checkman must NEVER be given any other duties.

Some ships are equipped with fully automatic feedwater controls, so a checkman is not normally needed. However, if the automatic system fails or is switched to manual control, then a checkman must be immediately stationed on the checks.

THROTTLE WATCH

The tasks of a throttleman at the main engines are very important. Orders from the bridge relative to movement of the propellers must be complied with immediately. To make

correct adjustments for the required speed, you must keep a close watch on the rpm indicator on the throttle board and open or close the throttle, as required, to attain or maintain the necessary rpm. In addition to handling the throttle itself, you may also have to operate a variety of associated valves, accurately log all speed changes in the Engineer's Bell Book, visually check all gages (pressure, temperature, vacuum, etc.) installed on the throttle board, and keep the petty officer in charge informed of any abnormal gage readings.

You should become thoroughly familiar with all the gages, instruments, and indicators on the throttle board so that you will know what a normal reading is. There are steam pressure gages, steam temperature thermometers, a revolutions-per-minute (rpm) indicator, an engine order telegraph, feedwater pressure gages, cooling water pressure gages, gages indicating the vacuum obtained in the main engine low-pressure turbine, and others. Whenever an opportunity presents itself, study the throttle board and ask questions. Do not hesitate to ask the operator whether those are normal readings and whether they are the approximate readings you should always see there during steaming conditions. When you have learned the difference between a normal reading and an abnormal reading, you may possibly help to prevent a major casualty by observing an abnormal reading and reporting it to the petty officer in charge of the watch.

LOWER LEVEL WATCHES

When you are assigned to the lower level to assist the lower level watch (pumpman) and to learn his duties and responsibilities, you will find a considerable number of pumps and other auxiliary machinery. Some of the pumps and equipment you will find are the main lube oil pumps and lube oil coolers, main condensate pumps and main condenser and, when installed in the engineroom, main feed pumps, main feed booster pumps, and fire pumps. In some installations you will also find air compressors on the lower level.

In addition to learning the proper procedures for starting, operating, and stopping the pumps and equipment, you must learn to make various routine checks on the operating machinery. Some of the checks for the main feed pump, the lube oil pump, and the main condensate pump are discussed in the sections that follow. Under the watchful eye of the pumpman you will learn how to make the following checks and to perform the following duties.

MAIN FEED PUMP

In addition to complying with the posted instructions and safety precautions for the machinery and equipment at this station, the pumpman performs the following duties:

1. Maintains main feed pump discharge pressure at a predetermined value by adjusting the constant pressure governor.
2. Keeps main feed pump bearings at the proper temperature by regulating the flow of water through the feed pump lube oil cooler.
3. Checks to ensure proper lube oil pressure to the bearings.
4. Keeps shaft packing glands adjusted properly. A small leakage is necessary for lubrication to prevent burning out the packing, but an excessive amount of leakage wastes boiler feedwater.
5. Checks and maintains proper lube oil level in the main feed pump sump tank.
6. Keeps valve packing glands tightened to prevent leakage.
7. Keeps his watch station clean; removes fire hazards by wiping up oil and picking up rags and other stray gear.
8. Is alert for unusual sounds, vibrations, temperatures, and pressures.
9. Keeps the standby pump ready for instant use.

LUBE OIL PUMP

1. Maintains the proper lube oil pump discharge pressure by adjusting the constant pressure governor.
2. Keeps the standby pump on automatic standby, ready for instant use.
3. Shifts and cleans main lube oil strainers once each watch or more often if required.

4. Checks the lube oil system for leaks and maintains the proper oil level in the main engine sump tank.

5. Operates the lube oil purifier as ordered.

6. Checks the oil pressure, to the lube oil service pump bearings and maintains the oil at the proper temperature by regulating the amount of water through the pump lube oil cooler.

7. Regulates the cooling water flow through the lube oil cooler to maintain the correct oil outlet temperature.

MAIN CONDENSATE PUMP

1. Keeps the condensate in the condenser hot well at the proper level.

2. Frequently checks the exhaust trunk and main condenser overboard for abnormal temperatures.

3. Checks the main condensate pump bearings for proper oil pressure and temperature.

4. Keeps the main condenser vented.

5. Starts or secures an additional pump, as required, to keep the condensate level at the correct height.

6. Constantly checks for unusual conditions such as vibrations, sounds, and high or low temperature or pressures.

All watch standers should be constantly alert for signs of leakage in all parts of the steam and water systems. Some of the more common causes of feedwater waste are: (1) leaks in pipe fittings, flanges, valve and pump packing glands, pump housings and relief valves; (2) use of excessive gland sealing steam; and (3) failure to shift drains from the bilges to the appropriate drain system. Using an excessive amount of boiler feedwater is an indication of a poorly operated plant and reflects on the ability of the watch stander.

UPPER LEVEL WATCH

When you are assigned to the duties of the upper level watch in the engineroom, you will record periodic temperature and pressure readings from the various gages on, or connected to, the upper level machinery; make required valve adjustments to correct conditions indicated by slight variations from the normal readings, and report unusual conditions to the petty officer in charge; maintain a normal water level in the deaerating tank, if it is in the engineroom, by adjusting the excess and makeup feed valves; light off and secure turbogenerators, and other upper level machinery, as ordered; and maintain an adequate gland seal pressure on the turbogenerator.

SHAFT ALLEY WATCH

Another main engine duty to which you may be assigned is that of keeping watch on the bearings of the propeller shafts leading from the reduction gears (or motors of a turboelectric driven ship) to the ship's propellers. The shaft alley watch stander:

1. Checks all spring bearings for proper lubrication, including correct oil level, condition of the oil, proper operation of self-oiling devices (ring or chain), and bearing temperature.

2. Checks and adjusts stern tube gland for correct amount of leak-off.

3. Is responsible for having the shaft alley bilge pumped.

4. Is to be especially alert during high speed to observe any abnormal rise in bearing temperature.

5. Reports hourly, by phone, to the control engineroom and at any time that abnormal conditions develop.

6. In ships which have the main thrust bearing in the shaft alley, is responsible for operation of the main thrust bearing lube oil system.

7. Performs any other additional duties which may be assigned.

EVAPORATOR WATCH

A ship requires a large amount of pure fresh water daily, yet a ship can only store sufficient water to last a few days; therefore proper and careful watches must be maintained on the evaporators whenever they are in operation. Proper watch standing requires the operator to

constantly check pressures, temperatures, vacuum, and salt content of the distilled water. The ship cannot operate if the distilled water that is to be used for feedwater contains more salt than the maximum allowable limits.

OTHER WATCHES OR ASSIGNMENTS

Each division officer prepares a Watch, Quarter, and Station Bill for his division. You will generally find the following information on this bill:

1. Organization of the division (i.e., sections and watches).

2. Listing of each person as to billet number, locker number, bunk number, compartment number, name, rating, and rate (actual and allowance).

3. Watch assignments for each person under various conditions of battle readiness.

4. Station each person will have and what he will provide for emergency situations such as Fire, Rescue and Assistance, and General Emergency.

5. Visit and search party, landing force, special sea detail, and other special duties and stations which each person is assigned.

The Watch, Quarter, and Station Bill tells you where you fit into the ship's organizational picture. Check it frequently, for it is your duty to know where you belong under all conditions. There is NO EXCUSE FOR NOT KNOWING. The bills may be differently designed for different ships, but the stations and duties are always approximately the same.

APPENDIX I

GLOSSARY

When you enter a new occupation, you must learn the vocabulary of the trade so that you understand your fellow workmen and can make yourself understood by them. Shipboard life requires that Navy personnel learn a relatively new vocabulary—even new terms for many commonplace items. The reasons for this need are many, but most of them boil down to convenience and safety. Under certain circumstances, a word or a few words may mean an exact thing or may mean a certain sequence of actions which makes it unnecessary to give a lot of explanatory details.

A great deal of the work of a Fireman is such that an incorrectly interpreted instruction could cause confusion, breakage of machinery, or even loss of life. Avoid this confusion and its attendant danger by learning the meaning of terms common to the Engineering Department.

This glossary is not all-inclusive, but it does contain many terms that every Fireman should know. The terms given in this glossary may have more than one definition; only those definitions as related to engineering are given.

ABT (automatic bus transfer): An automatic electrical device that supplies power to vital equipment. This device will shift from the normal power supply to an alternate power supply anytime the normal supply is interrupted.

ACETYLENE: A gas that is chemically produced from calcium carbide and water, used for welding and cutting.

ADAPTER: A coupling or similar device that permits fittings with different-sized openings (apertures) to be joined together.

AFTERCOOLER: A terminal heat-transfer unit after the last stage.

AIR EJECTOR: A type of jet pump, used to remove air and other gases from the condensers.

AIR CHAMBER: A chamber, usually bulb-shaped, on the suction and discharge sides of a pump. Air in the chamber acts as a cushion and prevents sudden shocks to the pump.

AIR REGISTER: A device in the casing of a boiler which regulates the amount of air for combustion and provides a circular motion to the air.

AISE: Association of Iron and Steel Engineers.

ALLOY: A mixture of two or more metals.

ALTERNATING CURRENT (a-c): Current that is constantly changing in value and direction at regular recurring intervals.

AMBIENT TEMPERATURE: The temperature of the surrounding area.

AMMETER: An instrument for measuring the rate of flow of electrical current in amperes.

ANNEALING: The softening of metal by heating and slow cooling.

ANNUNCIATOR: See ENGINE ORDER TELEGRAPH.

ARGON: An inert gas, slightly heavier than air, used in inert-gas shielded metal arc welding.

ARMORED CABLE: An electric cable that is protected on the outside by a metal covering.

ASTM: American Society for Testing Metals.

AUTOMATIC COMBUSTION CONTROL SYSTEM (ACC): A system that automatically controls the fuel and air mixture in a boiler.

AUXILIARY MACHINERY: Any system or unit of machinery that supports the main propulsion units or helps support the ship and the crew. Example: Pump, evaporator, steering engine, air-conditioning, and refrigerator equipment, laundry and galley equipment, deck winch, etc.

BACK PRESSURE: The pressure exerted on the exhaust side of a pump or engine.

BDC (bottom dead center): The position of a reciprocating piston at its lowest point of travel.

BALLASTING: The process of filling empty tanks with salt water to protect the ship from underwater damage and to increase its stability. See DEBALLASTING.

BLUEPRINT: Reproduced copy of drawing (usually having white lines on a blue background).

BOILER: A strong metal tank or vessel composed of tubes, drums, and headers, in which water is heated by the gases of combustion to form steam.

BOILER CENTRAL CONTROL STATION: A centrally located station for directing the control of all boilers in the fireroom.

BOILER DESIGN PRESSURE: Pressure specified by the manufacturer, usually about 103% of normal steam drum operating pressure.

BOILER INTERNAL FITTINGS: All parts inside the boiler which control the flow of steam and water.

BOILER OPERATING PRESSURE: The pressure required to be maintained in a boiler while in service.

BOILER OPERATING STATION: A location from which boilers are operated.

BOILER RECORD SHEET: A NavShips form maintained for each boiler, which serves as a monthly summary of operation.

BOILER REFRACTORIES: Materials used in the boiler furnace to protect the boiler from heat of combustion.

BOILER ROOM: A compartment containing boilers but not containing a station for operating or firing the boilers. Refers specifically to bulkhead enclosed boiler installations.

BOILER TUBE CLEANER: A cylindrical brush that is used to clean the insides of boiler tubes.

BOILER WATER: The water actually contained in the boiler.

BRAZING: A method of joining two metals at high temperature with a molten alloy.

BRINE: A highly concentrated solution of salt in water, normally associated with the overboard discharge of distilling plants.

BRITTLENESS: That property of a material which causes it to break or snap suddenly with little or no prior sign of deformation.

BULL GEAR: The largest gear in a reduction gear train—the main gear, as in a geared turbine drive.

BURNERMAN: Man in fireroom who tends the burners in the boilers.

BUSHING: A renewable lining for a hole through which a moving part passes.

BYPASS: To divert the flow of gas or liquid. Also, the line that diverts the flow.

CALIBRATION: The comparison of any measuring instrument with a set standard.

CANTILEVER: A projecting arm or beam supported only at one end.

CAPILLARY TUBE: A slender, thin-walled, small-bored tube used with remote-reading indicators.

CARBON DIOXIDE: A colorless, odorless gas used as a fire extinguishing agent and for inflating liferafts and lifejackets.

CARBON PACKING: Pressed segments of graphite used to prevent steam leakage around shafts.

CASUALTY POWER SYSTEM: Portable cables that are rigged to transmit power to vital equipment in an emergency.

CHECK VALVE: A valve that permits the flow of a liquid in one direction only.

CHILL SHOCKING: A method that uses steam and cold water to remove scale from the tubes of a distilling plant.

CHLORINE: A heavy, greenish-yellow gas used in water purification, sewage disposal, and in the preparation of bleaching solutions. Poisonous in concentrated form.

CIRCUIT BREAKER: An electrical device that provides circuit overload protection.

CLUTCH: A form of coupling designed to connect or disconnect a driving or driven member.

COLD IRON CONDITION: An idle plant as in a destroyer when all port services are received from an external source such as shore or tender.

CONDENSATE: Water produced in the cooling system of the steam cycle from steam that has returned from the turbine or from steam that has returned from various heat exchanges. The water is used over again to generate steam in the boiler for an endless repetitive cycle.

CONDENSER: A heat transfer device in which steam or vapor is condensed to water.

CONDUCTION: A method of heat transfer from one body to another when the two bodies are in physical contact.

CONSTANT PRESSURE GOVERNOR: A device that maintains a constant pump discharge pressure under varying loads.

CONTROLLER: A device used to stop, start, and protect motors from overloads, while the motors are running.

COOLER: Any device that removes heat. Some devices such as oil coolers remove heat to waste in overboard seawater discharge, and other devices such as an ejector cooler conserve heat by heating condensate for boiler feedwater.

CORROSION: The process of being eaten away gradually by chemical action, such as rusting.

COUNTERSINK: A cone-shaped tool used to enlarge and bevel one end of a drilled hole.

CREEP-RESISTANT ALLOY: A metal which resists the slow plastic deformation that occurs at high temperatures when the material is under constant stress.

CROSS-CONNECTED PLANT: A method of operating two or more plants as one unit from a common steam supply.

CURTIS STAGE: A velocity-compounded impulse turbine stage that has one pressure drop in the nozzles and two velocity drops in the blading.

DEAERATING FEED TANK (DA tank): A unit in the steam-water cycle that (1) frees the condensate of dissolved oxygen, (2) heats the feedwater, and (3) acts as a reservoir for feedwater.

DEBALLASTING: The process by which salt is emptied from tanks to protect the ship from underwater damage and to increase its stability.

DEGREE OF SUPERHEAT: The amount by which the temperature of steam exceeds the saturation temperature.

DIRECT CURRENT (d-c): Current that moves in one direction only.

DIRECT DRIVE: One in which the drive mechanism is coupled directly to the driven member.

DISTILLATE: Water produced in distilling plants.

DISTILLING PLANTS: Units commonly called evaporators (evaps) used to convert seawater into fresh water.

DRAWING: Illustrated plans that show fabrication and assembly details.

DRUM, STEAM: The large tank at the top of the boiler in which the steam collects.

DRUM, WATER: A tank at the bottom of a boiler; also called MUD DRUM.

DRY PIPE: A perforated pipe at the highest point in a steam drum to collect steam.

DUCTILITY: Property possessed by metals that allows them to be drawn or stretched.

ECONOMIZER: A heat transfer device on a boiler that uses the gases of combustion to preheat the feedwater.

EDUCTOR: A jet-type pump (no moving parts) used to empty flooded spaces.

EFFICIENCY: The ratio of the output to the input.

ELASTICITY: The ability of a material to return to its original size and shape.

ELECTRODE: A metallic rod (welding rod), used in electric welding, that melts when current is passed through it.

ELECTROHYDRAULIC STEERING: A system having a motor-driven hydraulic pump that creates the force needed to actuate the rams to position the ship's rudder.

ELECTROLYSIS: A chemical action that takes place between unlike metals in systems using salt water.

ELECTROMOTIVE FORCE (EMF): A force that causes electrons to move through a closed circuit; expressed in volts.

ELEMENT: A substance which consists of chemically united atoms of one kind.

ENERGY: The capacity for doing work.

ENGINEER'S BELL BOOK: A legal record, maintained by the throttle watch, of all ordered main engine speed changes.

ENGINE ORDER TELEGRAPH: A device on the ship's bridge to give orders to the engineroom. Also called ANNUNCIATOR.

EPM (equivalents per million): The number of equivalent parts of a substance per million parts of another substance. The word "equivalent" refers to the equivalent weight of a substance.

EVAPORATOR: A distilling device to produce fresh water from seawater.

EXPANSION JOINT: A junction which allows for expansion and contraction.

FATIGUE: The tendency of a material to break under repeated strain.

FEED HEATER: A heat transfer device that heats the feedwater before it goes to the boiler.

FEEDWATER: Water of the highest possible level of purity made in evaporators for use in boilers.

FERROUS METAL: Metal with a high iron content.

FIREBOX: The section of a ship's boiler where fuel oil combustion takes place.

FIRE MAIN: The saltwater line that provides firefighting water and flushing water throughout the ship.

FIRE TUBE BOILER: Boilers in which the gases of combustion pass through the tubes and heat the water surrounding them.

FLAREBACK: A backfire of flame and hot gases into a ship's fireroom from the firebox. Caused by a fuel oil explosion in the firebox.

FLASH POINT OF OIL: The temperature at which oil vapor will flash into fire although the main body of the oil will not ignite.

FLEXIBLE I-BEAM: An I-shaped steel beam on which the forward end of a turbine is mounted; it allows for longitudinal expansion and contraction.

FLOOR PLATES: The removable deck plating of a fireroom or engineroom aboard ship.

FLUX: A chemical agent that retards oxidation of the surface, removes oxides already present, and aids fusion.

FORCE: Anything that tends to produce or modify motion.

FORCED DRAFT: Air under pressure supplied to the burners in a ship's boiler.

FORCED DRAFT BLOWERS: Turbine-driven fans which supply air to the boiler furnace.

FORCED FEED LUBRICATION: A lubrication system that uses a pump to maintain a constant pressure.

FORGING: The forming of metal by heating and hammering.

FRESH WATER SYSTEM: A piping system which supplies fresh water throughout the ship.

FUEL OIL MICROMETER VALVE: A valve, installed at the burner manifold, that controls the fuel oil pressure to the burners.

FUEL OIL SERVICE TANKS: Tanks which provide suction to the fuel oil service pumps to discharge oil to the burners.

FUSE: A protective device that will open a circuit if the current flow exceeds a predetermined value.

GAGE GLASS: A device that indicates the liquid level in a tank.

GAS FREE: A term used to describe a space that has been tested and found safe for hot work (welding and cutting).

GEARED-TURBINE DRIVE: A turbine that drives a pump, generator, or other machinery through reduction gears.

GROUNDED PLUG: A three-pronged electrical plug used to ground portable tools to the ship's structure. It is a safety device which always must be checked prior to your using portable tools.

HAGEVAP SOLUTION: A chemical compound used in distilling plants to prevent the formation of scale.

HALIDE LEAK DETECTOR: A device that is used to locate leaks in refrigeration systems.

HANDHOLE: An opening large enough for the hand and arm to enter the boiler for making slight repairs and for inspection purposes.

HANDY BILLY: A small portable water pump.

HARDENING: The heating and rapid cooling (quenching) of metal to induce hardness.

HARDNESS: The ability of a material to resist penetration.

HEADER: A chamber, or tank, located within a boiler, to which tubes are connected so that water or steam may pass freely from one tube to the other(s). Similar to, but smaller than, a water drum.

HEAT EXCHANGER: Any device that allows the transfer of heat from one fluid (liquid or gas) to another.

HYDROGEN: A highly explosive, light, invisible, nonpoisonous gas used in underwater welding and cutting operations.

HYDROMETER: An instrument used to determine the specific gravity of liquids.

HYDROSTATIC TEST: A pressure test that uses water to detect leaks in a boiler or in other closed systems.

IGNITION, COMPRESSION: When the heat generated by compression in an internal combustion engine ignites the fuel (as in a diesel engine).

IGNITION SPARK: When the mixture of air and fuel in an internal combustion engine is ignited by an electric spark (as in a gasoline engine).

IMPELLER: An encased, rotating element provided with vanes which draw in fluid at the center and expel it at a high velocity at the outer edge.

IMPULSE TURBINE: A turbine in which the major part of the driving force is received from the impulse of incoming steam.

INDIRECT DRIVE: A drive mechanism coupled to the driven member by gears or belts.

INERT: Inactive.

INJECTOR: A device which uses a jet of steam to force water into the boiler. Injectors are also used in the diesel engine to force fuel into the cylinders.

INSULATION: A material used to retard heat transfer.

INTERCOOLER: An intermediate heat transfer unit between two successive stages, as in an air compressor.

JACKBOX: Receptacle, usually secured to a bulkhead, in which telephone jacks are mounted.

JOB ORDER: An order issued by a repair activity to its own subdivision to perform a repair job in response to work request.

JUMPER: Any connecting pipe, hose, or wire, normally used in emergencies aboard ship to bypass damaged sections of a pipe, a hose, or a wire. (See BYPASS.)

JURY RIG: Any temporary or makeshift device.

LABYRINTH PACKING: Rows of metallic strips or fins that prevent steam leakage along the shaft of a turbine.

LAGGING: A protective and confining cover placed over insulating material.

LIGHT OFF: Start. Literally, to start a fire in, as in "light off a boiler."

LOG BOOK: Any chronological record of events, such as engineering watch log.

LOG, ENGINEERING: A legal record of important events and data concerning the machinery of a ship.

LOG ROOM: Engineer's office aboard ship.

LUBE OIL PURIFIER: A unit that removes water and sediment from lubricating oil by centrifugal force.

MACHINABILITY: The ease with which a metal may be turned, planed, milled, or otherwise shaped.

MAIN CONDENSER: A heat exchanger which converts exhaust steam to feedwater.

MAIN DRAIN SYSTEM: System used for pumping bilges; consists of pumps and associated piping.

MAIN INJECTION (scoop injection): An opening in the skin of a ship through which cooling water is delivered to the main condenser and main lube oil cooler by the forward motion of the ship.

MAKEUP FEED: Water of required purity for use in ship's boilers. This water is needed to replace that lost in the steam cycle.

MALLEABILITY: That property of a material which enables it to be stamped, hammered, or rolled into thin sheets.

MANIFOLD: A fitting with numerous branches which conveys fluids between a large pipe and several smaller pipes.

MECHANICAL ADVANTAGE (MA): The advantage (leverage) gained by the use of devices such as a wheel to open a large valve, chain falls and block and tackle to lift heavy weights, and wrenches to tighten nuts on bolts.

MECHANICAL CLEANING: A method of cleaning the firesides of boilers by scraping and wire-brushing.

MICROMHOS: Electrical units used with salinity indicators to measure the conductivity of water.

MOTOR GENERATOR SET: A machine which consists of a motor mechanically coupled to a generator and usually mounted on the same base.

NAVY BOILER COMPOUND: A powdered chemical mixture used in boiler water treatment to convert scale-forming salts into sludge.

NAVY SPECIAL FUEL OIL (NSFO): The grade of fuel oil that the Navy uses in combatant ships.

NIGHT ORDER BOOK: A notebook containing standing and special instructions from the engineer officer to the night engineering officer of the watch.

NITROGEN: An inert gas which will not support life or combustion. Used in recoil systems and other spaces that require an inert atmosphere.

NONFERROUS METAL: Metals that are composed primarily of some element or elements other than iron.

OFFICER OF THE WATCH (OOW): Officer on duty in the engineering spaces.

OIL KING: A petty officer who receives, transfers, discharges, and tests fuel oil and maintains fuel oil records.

OIL POLLUTION ACTS: The Oil Pollution Act of 1924 (as amended) and the Oil Pollution Act of 1961 prohibit the overboard discharge of oil or water which contains oil, in port, in any sea area within 50 miles of land, and in special prohibited zones.

ORIFICE: A small opening.

OVERLOAD RELAY: An electrical protective device which automatically trips when a circuit draws excessive current.

OXIDATION: The process of various elements and compounds combining with oxygen. The corrosion of metals is generally a form of oxidation; rust on iron, for example, is iron oxide or oxidation.

PANT, PANTING: A series of pulsations caused by minor, recurrent explosions in the firebox of a ship's boiler. Usually caused by a shortage of air.

PERIPHERY: The curved line which forms the boundary of a circle (circumference), ellipse, or similar figure.

PITOMETER LOG: Device that indicates the speed of a ship and the distance traveled by measuring water pressure on a tube projected outside the ship's hull.

PLASTICITY: That property which enables a material to be excessively and permanently deformed without breaking.

PNEUMERCATOR: A type of manometer used to measure the volume of liquid in tanks.

PPM (parts per million): Comparison of the number of parts of a substance with a million parts of another substance. Used to measure the salt content of water.

PREHEATING: The application of heat to the base metal before it is welded or cut.

PRIME MOVER: The source of motion—as a turbine, automobile engine, etc.

PUNCHING TUBES: Process for cleaning the interiors of boiler tubes.

RADIATION, HEAT: Heat emitted in the form of heat waves.

REACH RODS: A length of pipe or back stock used as an extension on valve stems.

REACTION TURBINE: A turbine in which the major part of the driving force is received from the reactive force of steam as it leaves the blading.

REDUCER: Any coupling or fitting which connects a large opening to a smaller pipe or hose.

REDUCING VALVES: Automatic valves that provide a steady pressure lower than the supply pressure.

REDUCTION GEAR: A set of gears that transmit the rotation of one shaft to another at a slower speed.

REEFER: A provision cargo ship or a refrigerated compartment. An authorized abbreviation for refrigerator.

REFRACTORY: Various types of heat resistant, insulating material used to line the insides of boiler furnaces.

REFRIGERANT 12 (R-12): A nonpoisonous gas used in air conditioning and refrigeration systems.

REGULATOR (gas): An instrument that controls the flow of gases from compressed gas cylinders.

REMOTE OPERATING GEAR: Flexible cables attached to valve wheels so the valves can be operated from another compartment.

RISER: A vertical pipe leading off a large one. Example: a fireman riser.

ROOT VALVE: A valve located where a branch line comes off the main line.

ROTARY SWITCH: An electrical switch which closes or opens the circuit by a rotating motion.

ROTOR: The rotating part of a turbine, pump, or electric motor.

SAE: Society of Automotive Engineers.

SAFETY VALVE: An automatic, quick opening and closing valve which has a reset pressure lower than the lift pressure.

SALINITY: Relative salt content of water.

SALINOMETER: A hydrometer that measures the concentration of salt in a solution.

SATURATION PRESSURE: The pressure corresponding to the saturation temperature.

SATURATION TEMPERATURE: Temperature at which a liquid boils under a given pressure. For any given saturation temperature there is a corresponding saturation pressure.

SCALE: Undesirable deposit, mostly calcium sulfate, which forms in the tubes of boilers.

SECURE: To make fast or safe—the order given on completion of a drill or exercise. The procedure followed when any piece of equipment is to be shut down.

SENTINEL VALVES: Small relief valves used primarily as a warning device.

SHAFT ALLEY: The long compartment of a ship in which the propeller shafts revolve.

SKETCH: A rough drawing indicating major features of an object to be constructed.

SLIDING FEET: A mounting for turbines and boilers which allows for expansion and contraction.

SLUDGE: The sediment left in fuel oil tanks.

SOLID COUPLING: A device that joins two shafts rigidly.

SOOT BLOWER: Soot removal device that uses a steam jet to clean the firesides of a boiler.

SPECIFIC HEAT: The amount of heat required to raise the temperature of 1 pound of a substance 1°F. All substances are compared to water which has a specific heat of 1 BTU/lb/°F.

SPEED-LIMITING GOVERNOR: A device that limits the rotational speed of a prime mover.

SPEED-REGULATING GOVERNOR: A device that maintains a constant speed on a piece of machinery that is operating under varying load conditions.

SPLIT PLANT: A method of operating propulsion plants so that they are divided into two or more separate and complete units.

SPRING BEARINGS: Bearings positioned at varying intervals along a propulsion shaft to help keep it in alignment and to support its weight.

STANDBY EQUIPMENT: Two identical auxiliaries that perform one function. When one auxiliary is running, the standby is so connected that it may be started if the first fails.

STATIC: A force exerted by reason of weight alone as related to bodies at rest or in balance.

STEAMING WATCH: Watches stood when the main engines are in use and the ship is underway.

STEAM LANCE: A device that uses low pressure steam to remove soot from inside boilers and to remove carbon from boiler tubes.

STEERING ENGINE: The machinery that turns the rudder.

STERN TUBE: A watertight enclosure for the propeller shaft.

STRAIN: The deformation, or change in shape, of a material which results from the weight of the applied load.

STRENGTH: The ability of a material to resist strain.

STRESS: A force which produces or tends to produce, deformation in a metal.

STUFFING BOX: A device to prevent leakage between a moving and a fixed part in a steam engineering plant.

STUFFING TUBE: A packed tube that makes a watertight fitting for a cable or small pipe passing through a bulkhead.

SUMP: A container, compartment, or reservoir, used as a drain or receptacle for fluids.

SUPERHEATER: A unit in the boiler that drys the steam and raises its temperature.

SWASH PLATES: Metal plates in the lower part of the steam drum that prevent the surging of boiler water with the motion of the ship.

SWITCHBOARD: A panel or group of panels with automatic protective devices that distribute electrical power throughout the ship.

TAKE LEADS: A method of determining bearing clearance.

TANK TOP: Top side of tank section or double bottom of a ship.

TDC (top dead center): The position of a reciprocating piston at its uppermost point of travel.

TEMPERING: The heating and controlled cooling of a metal to produce the desired hardness.

THIEF SAMPLE: A sample of oil or water taken from a ship's tank for analysis.

THROTTLEMAN: Man in the engineroom who operates the throttles to control the main engines.

THRUST BEARING: A bearing that limits the end play and absorbs the axial thrust of a shaft.

TO BLOW TUBES: To use steam to remove soot and carbon from the tubes of steaming boilers.

TOP OFF: To fill up, as a ship tops off, with fuel oil before leaving port.

TOUGHNESS: The property of a material which enables it to withstand shock as well as to be deformed without breaking.

TRANSFORMER: An electrical device used to step up or step down an a-c voltage.

TRICK WHEEL: A steering wheel in the steering engineroom or emergency steering station of a ship.

TUBE EXPANDER: A tool that expands replacement tubes into their seats in boiler drums and headers.

TURBINE: A multibladed rotor driven by steam or hot gas.

TURBINE JACKING GEAR: A motor-driven gear arrangement that slowly rotates idle propulsion shafts and turbines.

TURBINE STAGE: One set of nozzles and the succeeding row or rows of moving blades.

UPTAKES (exhaust trunks): Large enclosed passages for exhaust gases to move from boilers to the stacks.

VENT: A valve in a tank or compartment that primarily permits air to escape.

VENTURI INJECTOR: A device used to wash the firesides of boilers.

VOID: A small empty compartment below decks.

VOLATILE: The term that describes a liquid which vaporizes quickly.

VOLTAGE TESTER: A portable instrument that detects electricity.

WATER TUBE BOILER: Boilers in which the water flows through the tubes and is heated by the gases of combustion.

WATER WASHING: A method of cleaning the firesides of boilers to remove soot and carbon.

WELDING LEAD: The conductor through which electrical current is transmitted from the power source to the electrode holder and welding rod.

WHELPS: Any of the ribs or ridges on the barrel of a capstan or windlass.

WIPED BEARINGS: A bearing in which the babbitt has melted because of excess heat.

WIREWAYS: Passageways between decks and on the overheads of compartments that contain electric cables.

WORK REQUEST: Request issued to naval shipyard, tender, or repair ship for repairs.

ZERK FITTING: A small fitting to which a grease gun can be applied to force lubricating grease into bearings or moving parts of machinery.

ZINC: A metal placed in saltwater systems to counteract the effects of electrolysis.

APPENDIX II

THE METRIC SYSTEM

The metric system was developed by French scientists in 1790 and was specifically designed to be an easily used system of weights and measures to benefit science, industry, and commerce. The metric system is calculated entirely in powers of 10, so one need not work with the various mathematical bases used with the English system, such as 12 inches to a foot, 3 feet to a yard, and 5280 feet to a mile.

The system is based on the "meter" which is one ten-millionth of the distance from the Equator to the North Pole. It is possible to develop worldwide standards from this base of measurement. The metric system of weights is based on the gram, which is the weight of a specific quantity of water.

Soon after the system was developed scientists over the world adopted it and were able to deal with the mathematics of their experiments more easily. The data and particulars of their work could be understood by other scientists anywhere in the world. During the early 19th century many European nations adopted the new system for engineering and commerce. It was possible for these countries to trade manufactured goods with one another without worrying whether it would be possible to repair machinery from another country without also buying special wrenches and measuring tools. Countries could buy and sell machine tools and other sophisticated and precision machinery without troublesome modifications or alterations. It was much easier to teach the metric system, since meters can be changed to kilometers or centimeters with the movement of a decimal point, which is roughly like being able to convert yards to miles or inches by adding zeros and a decimal instead of multiplying by 1760 or dividing by 36.

With the exception of the United States, all the industrialized nations of the world have adopted the metric system. Even England and Canada are changing from their traditional systems of measure, and the metric system will be almost universal by 1980.

Although the metric system has not been officially legislated by the Congress, the metric system is becoming more prominent in this country. Most automobile mechanics own some metric wrenches to work on foreign cars or foreign components in American cars. Almost all photographic equipment is built to metric standards. Chemicals and drugs are usually sold in metric quantities, and "calorie counters" are using a metric unit of thermal energy.

Because we are allied with countries who use the metric system, much of our military information is in metric terms. Military maps use meters and kilometers instead of miles, and many weapons are in metric sizes, such as 7.62 mm, 20 mm, 40 mm, 75 mm, and 155 mm. Interchange of military equipment has caused a mixture of metric and English measure equipment since World War I when the army adopted the French 75 mm field gun, and World War II when the Navy procured the Swedish 40 mm Bofors and the Swiss 20 mm Oerlikon heavy machine guns.

It is inevitable that the United States will officially adopt the metric system. Exactly when this happens and how rapidly the changeover will depend on economics, since the expense of retooling our industry and commerce to new measurements will be very great. The cost of conversion will be offset by increased earnings from selling machinery and products overseas. Another benefit is that scientists use the metric system, but their calculations now have to be

translated into English measure to be used by industry. With adoption of the metric system ideas can go directly from the drawing board to the assembly line.

The Navy will be using the metric system more during the next few years. Although you will find it easier to solve problems using this system, at first you will find it difficult to visualize or to estimate quantities in unfamiliar units of measure.

Fortunately, many metric units can be related to equivalent units in the English system. The meter which is the basic unit is approximately one-tenth longer than a yard.

The basic unit of volume, the liter, is approximately one quart. The gram is the weight of a cubic centimeter, or milliliter, of pure water and is the basic unit of weight. As a common weight though, the kilogram, or kilo, which equals the weight of a liter of water, weighs 2.2 pounds. The cubic centimeter (cc) is used where we would use the square inch, and where we measure by the fluid ounce, the metric system employs the milliliter (ml). For power measure the metric system uses the kilowatt (kW), which is approximately 1.3 horsepower.

In terms of distance, a land mile is eight-fifths of a kilometer and a nautical mile is 1.852 kilometers, or nearly 2 kilometers.

A basic metric expression of pressure is the kilogram per square centimeter, which is 14.2 psi, nearly 1 atmosphere of pressure.

When working on foreign machinery, you may notice that your half-inch, three-quarter inch, and one-inch wrenches will fit many of the bolts. These sizes correspond to 13 mm, 19 mm, and 26 mm respectively in the metric system, and are very popular because they are interchangeable. The 13/16 inch spark plug wrench, which is standard in this country, is intended to fit a 20 mm nut.

The basic quantities of the metric system are multiplied or divided by powers of 10 to give other workable values. We cannot easily measure machine parts in terms of a meter, so the millimeter, or one-thousandth of a meter is used. For very fine measure the micron, also called the micrometer, can be used. It is one-millionth part of a meter, or one-thousandth of a millimeter. For small weights the milligram, one-thousandth of a gram is used. All of these multiples are expressed with standard prefixes taken from Latin:

micro	= 1/1,000,000
milli	= 1/1,000
centi	= 1/100
*deci	= 1/10
*deca	= 10
*hecto	= 100
kilo	= 1,000
*myria	= 10,000
mega	= 1,000,000

* Rarely used

Over the next few years the metric system will become more used by the Navy as well as by the civilian world. You will find it easy to work with once you have mastered the basic terms. It will be difficult to translate values from our present system to the metric system, but this operation will become unnecessary once the new measurements are totally adopted.

Tables of equivalent English measure and metric equivalents are essential when you work simultaneously with both systems. The table which follows shows the equivalent measures of the two systems. The columns on the left have the equivalent values which are accurate enough for most work, and on the right are the multiples used to convert the values with a high degree of accuracy.

THESE PREFIXES MAY BE APPLIED TO ALL SI UNITS

Multiples and Submultiples		Prefixes	Symbols
1 000 000 000 000	$= 10^{12}$	tera (tĕr′ȧ)	T
1 000 000 000	$= 10^{9}$	giga (jĭ′gȧ)	G
1 000 000	$= 10^{6}$	mega (mĕg′ȧ)	M*
1 000	$= 10^{3}$	kilo (kĭl′ō)	k*
100	$= 10^{2}$	hecto (hĕk′tō)	h
10	$= 10$	deka (dĕk′ȧ)	da
0.1	$= 10^{-1}$	deci (dĕs′ĭ)	d
0.01	$= 10^{-2}$	centi (sĕn′tĭ)	c*
0.001	$= 10^{-3}$	milli (mĭl′ĭ)	m*
0.000 001	$= 10^{-6}$	micro (mī′krō)	μ*
0.000 000 001	$= 10^{-9}$	nano (năn′ō)	n
0.000 000 000 001	$= 10^{-12}$	pico (pē′kō)	p
0.000 000 000 000 001	$= 10^{-15}$	femto (fĕm′tō)	f
0.000 000 000 000 000 001	$= 10^{-18}$	atto (ăt′tō)	a

*Most commonly used

Multiply	By	To Obtain
Acres	40.47	Ares
Acres	4,047	Centares
Acres	10	Square chains
Acres	43,560	Square Feet
Acres	4,840	Square Yards
Ares	0 02471	Acres
Ares	100	Centares
Ares	1,076	Square Feet
Ares	119.6	Square Yards
Barrels (U.S., dry)	3.281	Bushels
Barrels (U.S., liquid)	4.21	Cubic Feet
Barrels (U.S., liquid)	31.5	Gallons
Board Feet (1" x 1" x 1")	144	Cubic inches
Cable lengths (U.S.)	120	Fathoms
Cable lengths (U.S.)	720	Feet
Cable lengths (U.S.)	240	Yards
Centares	10.76	Square feet
Centares	1.196	Square Yards
Centimeters	0 3937	Inches
Cubic Centimeters	0 06102	Cubic Inches
Chains	66	Feet
Chains	100	Links
Chains	4	Rods
Cubic Feet	1,728	Cubic Inches
Cubic Feet	0 02832	Cubic Meters
Cubic Feet	0 03704	Cubic Yards
Cubic Feet	6.229	Gallons (British)
Cubic Feet	7.481	Gallons (U.S.)
Cubic Feet	28.316	Liters
Cubic Inches	16.39	Cubic Centimeters
Cubic Inches	0 0005787	Cubic Feet
Cubic Inches	0 003606	Gallons (British)
Cubic Inches	0 004329	Gallons (U.S.)
Cubic Inches	0.01639	Liters
Cubic Meters	35.31	Cubic Feet
Cubic Meters	1.308	Cubic Yards
Cubic Yards	27	Cubic Feet
Cubic Yards	0 7646	Cubic Meters
Cubic Yards	764.6	Liters
Degrees (C.) + 17.8	1.8	Degrees (F.)
Degrees (F.) − 32	0 5556	Degrees (C.)
Degrees	0 01745	Radians
Fathoms	0.00833	Cable Lengths (U. S.)
Fathoms	6	Feet
Fathoms	1.8288	Meters

Multiply	By	To Obtain
Feet	30.48	Centimeters
Feet	0.1667	Fathoms
Feet	0 3048	Meters
Feet per Minute	0 01136	Miles per Hour
Feet per Second	0 5921	Knots
Feet per Second	18.288	Meters per Minute
Feet per Second	0.6818	Miles per Hour
Furlongs	10	Chains
Furlongs	660	Feet
Furlongs	40	Rods
Furlongs	220	Yards
Gallons (British)	4,546.1	Cubic Centimeters
Gallons (British)	0 1605	Cubic Feet
Gallons (British)	277.274	Cubic Inches
Gallons (British)	1.2009	Gallons (U.S.)
Gallons (British)	4.546	Liters
Gallons (British)	4	Quarts (British)
Gallons (U.S.)	0 03175	Barrels (liquid, U.S.)
Gallons (U.S.)	3,785.4	Cubic Centimeters
Gallons (U.S.)	0 13368	Cubic Feet
Gallons (U.S.)	231	Cubic Inches
Gallons (U.S.)	0 8327	Gallons (British)
Gallons (U.S.)	3.785	Liters
Gallons (U.S.)	4	Quarts (U.S.)
Grams	15.43	Grains
Grams	0 001	Kilograms
Grams	1,000	Milligrams
Grams	0.03527	Ounces (avoir-dupois)
Hands	10.16	Centimeters
Hands	4	Inches
Hectares	2.471	Acres
Hectares	100	Ares
Hectoliters	0 1	Cubic Meters
Hectoliters	26.417	Gallons (U.S.)
Hectoliters	100	Liters
Hogsheads	2	Barrels (Liquid, U.S.)
Hogsheads (U.S.)	63	Gallons (U.S.)
Hundredweights	0 508	Quintals (metric)
Inches	72	Points
Inches	6	Picas
Inches	6	Ems
Inches	12	Ens
Inches	2.54	Centimeters

Multiply	By	To Obtain
Inches	0.0833	Feet
Inches	1,000	Mils
Inches	0.0277	Yards
Inches of Mercury	0.49131	Pounds per Square Inch
Kilograms	1,000	Grams
Kilograms	2.2046	Pounds (Avoirdupois)
Kiloliters	1	Cubic Meters
Kiloliters	1.308	Cubic Yards
Kiloliters	264.18	Gallons (U.S.)
Kiloliters	1,000	Liters
Kilometers	4.557	Cable Lengths
Kilometers	3,280.8	Feet
Kilometers	39,370	Inches
Kilometers	1,000	Meters
Kilometers	0.5396	Miles, Nautical
Kilometers	0.62137	Miles, Statute
Kilometers	1,093.6	Yards
Knots	1.1516	Statute Miles per Hour
Knots	1.688	Feet per Second
Leagues, Nautical	25.33	Cable Lengths
Leagues, Nautical	5.5597	Kilometers
Leagues, Nautical	3	Miles, Nautical
Leagues, Statute	4.8280	Kilometers
Leagues, Statute	3	Miles, Statute
Links	7.92	Inches
Liters	1,000	Cubic Centimeters
Liters	61.025	Cubic Inches
Liters	0.21998	Gallons (British)
Liters	0.26418	Gallons (U.S.)
Liters	0.8799	Quarts (British)
Liters	0.908	Quarts (U.S., dry)
Liters	1.0567	Quarts (Liquid, U.S.)
Meters	100	Centimeters
Meters	0.001	Kilometers
Meters	1.0936	Yards
Meters	3.281	Feet
Meters	39.37	Inches
Meters	1,000	Millimeters
Meters	1.0936	Yards
Meters per Minute	0.0547	Feet per Second
Meters per Second	2.237	Miles per Hour
Microns	0.001	Millimeters
Miles, Nautical	8.44	Cable Lengths

Multiply	By	To Obtain
Miles, Nautical	6,076.1	Feet
Miles, Nautical	72,963	Inches
Miles, Nautical	1.8532	Kilometers
Miles, Nautical	1,853.2	Meters
Miles, Nautical	1.1508	Miles, Statute
Miles, Nautical	1	Minutes of Latitude
Miles, Nautical	2,026.8	Yards
Miles per Hour (Statute)	88	Feet per Minute
Miles per Hour (Statute)	1.467	Feet per Second
Miles per Hour	0.8684	Knots
Miles, Statute	7.33	Cable Lengths
Miles, Statute	5,280	Feet
Miles, Statute	8	Furlongs
Miles, Statute	63,360	Inches
Miles, Statute	1.6093	Kilometers
Miles, Statute	1,609.3	Meters
Miles, Statute	0.8689	Miles, Nautical
Miles, Statute	1,760	Yards
Millier (See Tons – Metric)		
Milliradians	206.265	Seconds of Arc
Mils	0.001	Inches
Myriameters	10	Kilometers
Ounces (avoirdupois)	28.3495	Grams
Pint (Liquid, U.S.)	4	Gills (U.S.)
Pint (Liquid, Br.)	4	Gills (British)
Pint (Liquid, Br.)	0.56825	Liters
Pint (Liquid, U.S.)	0.4732	Liters
Pounds (avoirdupois)	7,000	Grains
Pounds (avoirdupois)	453.59	Grams
Pounds (avoirdupois)	0.4536	Kilograms
Pounds (avoirdupois)	16	Ounces
Pounds (avoirdupois)	1.2153	Pounds (troy)
Pounds (troy)	0.8229	Pounds (avoirdupois)
Pounds per Square Inch	2.03537	Inches of Mercury
Quart (British)	1.1365	Liters
Quart (British)	2	Pints (British)
Quart (Liquid, U.S.)	0.9463	Liters
Quart (U.S.)	2	Pints (U.S.)
Quintals (Metric)	1.97	Hundredweights
Quintals (Metric)	100	Kilograms

Multiply	By	To Obtain	Multiply	By	To Obtain
Radians	57.30	Degrees	Square Miles, Statute	259	Hectares
Rods	16.3	Feet	Square Miles, Statute	2.59	Square Kilometers
Rods	25	Links	Square Yards	0.8362	Centares
Square Centimeters	0.1550	Square Inches	Square Yards	9	Square Feet
Square Feet	0.0929	Centares	Square Yards	1,296	Square Inches
Square Feet	929	Square Centimeters	Tons (Long)	1.016	Metric Tons
Square Feet	144	Square Inches	Tons (Long)	2,240	Pounds (Avoir-dupois)
Square Feet	0.1111	Square Yards			
Square Inches	6.452	Square Centimeters	Tons (Metric) (Millier)	1,000	Kilograms
Square Inches	0.006944	Square Feet			
Square Kilometers	100	Hectares	Tons (Metric) (Millier)	2,204.6	Pounds (Avoir-dupois)
Square Kilometers	0.3861	Square Miles (Statute)			
			Tons (Short)	0.9072	Metric Tons
Square Meters (See Centares)			Tons (Short)	2,000	Pounds (Avoir-dupois)
Square Miles, Statute	640	Acres	Yards	91.44	Centimeters
Square Miles, Statute	25,900	Ares	Yards	0.9144	Meters

INDEX

F

G

H

I

L

R

S

T

U

V

W

OCCUPATIONAL STANDARDS

Firemen (FN) train for one of the general or service ratings of Engineering and Hull Group VII. Firemen stand messenger, cold iron, and fire watches; clean engineering spaces and equipment; make minor repairs to engineering equipment; record readings of gages; participate in general drills; and perform general detail duties.

The observance of proper safety precautions in all areas is an integral part of each billet and the responsibility of every Navy man and woman: therefore, it is a universal requirement for all ratings.

OCCUPATIONAL STANDARDS		Covered in Assignment
25 NAVAL ORIENTATION AND ORGANIZATION		
25251	Identify organizational structure of the engineering department	1
28 TECHNICAL DRAWINGS		
28286	Read a three-view working drawing	1
28287	Use damage-control drawings to locate principal valves in main steamline	1,4,5
30 MECHANICAL MAINT/OPERA-AUX EQUIPMENT		
30609	Locate refrigeration equipment, anchor windlasses, distilling plants, compressors, steering engines, cranes, elevators, winches, and the following pumps: fuel oil service, fuel oil transfer, fire and flushing, fire and bilge, main lubricating oil, fresh water, condensate, main circulating, main feed, main feed booster, and emergency feed pump	4,5
30610	Operate centrifugal and reciprocating pumps using checkoff sheet	4,5
30611	Define functions of the following auxiliary equipment: air compressors, distilling plants, refrigeration plants, fuel oil heaters, lube oil coolers, main and auxiliary condensers, air ejector condenser assembly, a.c. and d.c. generators and motors, and pumps	4,5

OCCUPATIONAL STANDARDS		Covered in Assignment
31 MECHANICAL MAINT/OPERA-PROPULSION		
31376	Read fuel, water, oil, air and steam gages, indicators, and thermometers	4,6
31377	Identify basic types and component parts of:	
	A. Naval boilers	3
	B. Steam turbines	2,3
	C. Reduction gears	2,3
	D. Propeller and shafting	2
	E. Shipboard electrical systems	5
	F. Internal combustion engines	6
31378	Define functions of valves found in engineering systems	4,5
31379	Perform functions of boat engineer	1
31380	Replace gaskets and repack valves in low pressure steam and water piping systems	5
31381	Perform minor engine maintenance	6
31382	Trace path of main steam from boiler to engine and back to boiler, naming essential fittings, piping, and main machinery through which it passes	1,4,5
31383	Define principles of main and auxiliary steam cycles	2
31384	Define basic principles of:	
	A. Mass, weight, and inertia	1,2
	B. Force, energy, and power	1,2
	C. Speed, velocity, and acceleration	1,2
	D. Pressure and vacuum	1,2
	E. Hydraulics and pneumatics	1,2
	F. Combustion, heat, and temperature	1,2
31385	Recognize common engineering terms and nomenclature	
31386	Assist in performance of maintenance using maintenance requirement cards (MRC)	1
31387	Use weekly 3-M schedule to determine maintenance assignments	1
38 ADMINISTRATION		
38001	File ship's blueprints	1

OCCUPATIONAL STANDARDS

		Covered in Assignment
42 GENERAL WATCHSTANDING		
42242	Stand following engineering watches:	
	A. Fire watch	6
	B. Messenger	6
	C. Cold iron	6
	D. Sounding and security watch	6
42243	Maintain required records at watch station	
94 MECHANICAL MAINTENANCE		
94368	Use and maintain handtools	1
94369	Use lubricating oils and greases	3

FIREMAN

NAVEDTRA 10520-E

Prepared by the Naval Education and Training Program Development Center, Pensacola, Florida

Your NRCC contains a set of assignments and self-scoring answer sheets (packaged separately). The Rate Training Manual, Fireman, NAVEDTRA 10520-E, is your textbook for the NRCC. If an errata sheet comes with the NRCC, make all indicated changes or corrections. Do not change or correct the textbook or assignments in any other way.

HOW TO COMPLETE THIS COURSE SUCCESSFULLY

Study the textbook pages given at the beginning of each assignment before trying to answer the items. Pay attention to tables and illustrations as they contain a lot of information. Making your own drawings can help you understand the subject matter. Also, read the learning objectives that precede the sets of items. The learning objectives and items are based on the subject matter or study material in the textbook. The objectives tell you what you should be able to do by studying assigned textual material and answering the items.

At this point you should be ready to answer the items in the assignment. Read each item carefully. Select the BEST ANSWER for each item, consulting your textbook when necessary. Be sure to select the BEST ANSWER from the subject matter in the textbook. You may discuss difficult points in the course with others. However, the answer you select must be your own. Use only the self-scoring answer sheet designated for your assignment. Follow the scoring directions given on the answer sheet itself and elsewhere in this course.

Your NRCC will be administered by your command or, in the case of small commands, by the Naval Education and Training Program Development Center. No matter who administers your course you can complete it successfully by earning grades that average 3.2 or higher. If you are on active duty, the average of your grades in all assignments must be at least 3.2. If you are NOT on active duty, the average of your grades in all assignments of each creditable unit must be at least 3.2. The unit breakdown of the course, if any, is shown later under Naval Reserve Retirement Credit.

WHEN YOUR COURSE IS ADMINISTERED BY LOCAL COMMAND

As soon as you have finished an assignment, submit the completed self-scoring answer sheet to the officer designated to administer it. He will check the accuracy of your score and discuss with you the items that you do not understand. You may wish to record your score on the assignment itself since the self-scoring answer sheet is not returned.

If you are completing this NRCC to become eligible to take the fleetwide advancement examination, follow a schedule that will enable you to complete all assignments in time. Your schedule should call for the completion of at least one assignment per month.

Although you complete the course successfully, the Naval Education and Training Program Development Center will not issue you a letter of satisfactory completion. Your command will make a note in your service record, giving you credit for your work.

WHEN YOUR COURSE IS ADMINISTERED BY THE NAVAL EDUCATION AND TRAINING PROGRAM DEVELOPMENT CENTER

After finishing an assignment, go on to the next. Retain each completed self-scoring answer sheet until you finish all the assignments in a unit (or in the course if it is not divided into units). Using the envelopes provided,

mail your self-scored answer sheets to the Naval Education and Training Program Development Center where the scores will be verified and recorded. Make sure all blanks at the top of each answer sheet are filled in. Unless you furnish all the information required, it will be impossible to give you credit for your work. You may wish to record your scores on the assignments since the self-scoring answer sheets are not returned.

The Naval Education and Training Program Development Center will issue a letter of satisfactory completion to certify successful completion of the course (or a creditable unit of the course). To receive a course-completion letter, follow the directions given on the course-completion form in the back of this NRCC.

You may keep the textbook and assignments for this course. Return them only in the event you disenroll from the course or otherwise fail to complete the course. Directions for returning the textbook and assignments are given on the book-return form in the back of this NRCC.

PREPARING FOR YOUR ADVANCEMENT EXAMINATION

Your examination for advancement is based on the Manual of Navy Enlisted Manpower and Personnel Classification and Occupational Standards (NAVPERS 18068-D). The sources of questions in this examination are given in the Bibliography for Advancement Study (NAVEDTRA 10052). Since your NRCC and textbook are among the sources listed in this bibliography, be sure to study both in preparing to take your advancement examination. The standards for your rating may have changed since your course and textbook were printed, so refer to the latest editions of NAVPERS 18068-D and NAVEDTRA 10052.

NAVAL RESERVE RETIREMENT CREDIT

This course is evaluated at 10 Naval Reserve retirement points. These points are creditable to personnel eligible to receive them under current directives governing retirement of Naval Reserve personnel. Points will be credited upon satisfactory completion of the entire course.

COURSE OBJECTIVE

When you complete this course, you will have a broad concept of how the engineering plant works from the beginning of the steam cycle in the fireroom through the engineroom and return to the fireroom. You will have a general knowledge of the piping and auxiliary systems needed to operate a steam plant. You will have a broad view of the electrical distribution system, damage control, and small boats. You will have been introduced to the engineering plant organization and the types of watches stood by engineering personnel.

While working on this nonresident career course, you may refer freely to the text. You may seek advice and instruction from others on problems arising in the course, but the solutions submitted must be the result of your own work and decisions. You are prohibited from referring to or copying the solutions of others, or giving completed solutions to anyone else taking the same course.

Naval nonresident career courses may include a variety of items -- multiple-choice, true-false, matching, etc. The items are not grouped by type; regardless of type, they are presented in the same general sequence as the textbook material upon which they are based. This presentation is designed to preserve continuity of thought, permitting step-by-step development of ideas. Some courses use many types of items, others only a few. The student can readily identify the type of each item (and the action required of him) through inspection of the samples given below.

MULTIPLE-CHOICE ITEMS

Each item contains several alternatives, one of which provides the best answer to the item. Select the best alternative and erase the appropriate box on the answer sheet.

SAMPLE

s-1. The first person to be appointed Secretary of Defense under the National Security Act of 1947 was
1. George Marshall
2. James Forrestal
3. Chester Nimitz
4. William Halsey

The erasure of a correct answer is indicated in this way on the answer sheet:

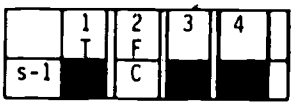

TRUE-FALSE ITEMS

Determine if the statement is true or false. If any part of the statement is false the statement is to be considered false. Erase the appropriate box on the answer sheet as indicated below.

SAMPLE

s-2. Any naval officer is authorized to correspond officially with a bureau of the Navy Department without his commanding officer's endorsement.

The erasure of a correct answer is also indicated in this way on the answer sheet:

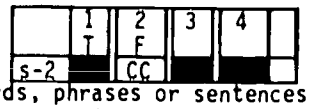

MATCHING ITEMS

Each set of items consists of two columns, each listing words, phrases or sentences. The task is to select the item in column B which is the best match for the item in column A that is being considered. Specific instructions are given with each set of items. Select the numbers identifying the answers and erase the appropriate boxes on the answer sheet.

SAMPLE

In items s-3 through s-6, match the name of the shipboard officer in column A by selecting from column B the name of the department in which the officer functions.

A. Officers	B. Departments
s-3. Damage Control Assistant	1. Operations Department
s-4. CIC Officer	2. Engineering Department
s-5. Assistant for Disbursing	3. Supply Department
s-6. Communications Officer	

The erasure of a correct answer is indicated in this way on the answer sheet:

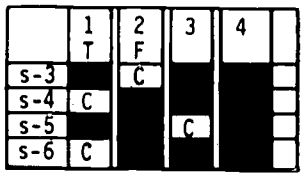

How To Score Your Immediate Knowledge of Results (IKOR) Answer Sheets

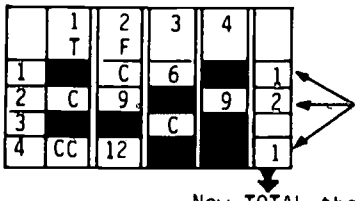

Total the number of incorrect erasures (those that show page numbers) for each item and place in the blank space at the end of each item.

Sample only

Number of boxes erased incorrectly	0-2	3-7	8-
Your score	4.0	3.9	3.8

Now TOTAL the column(s) of incorrect erasures and find your score in the Table at the bottom of EACH answer sheet.

NOTICE: If, on erasing, a page number appears, review text (starting on that page) and erase again until "C", "CC", or "CCC" appears. For courses administered by the Center, the maximum number of points (or incorrect erasures) will be deducted from each item which does NOT have a "C", "CC", or "CCC" uncovered (i.e., 3 pts. for four choice items, 2 pts. for three choice items, and 1 pt. for T/F items).

Assignment 1

Preparing for Advancement; Engineering Department and Engineering Fundamentals

Textbook Assignment: Chapters 1, 2, and 3

In this course you will demonstrate that learning has taken place by correctly answering teaching items. The mere physical act of indicating a choice on an answer sheet is not in itself important; it is the mental achievement, in whatever form it may take, prior to the physical act that is important and toward which nonresident career course learning objectives are directed. The selection of the correct choice for a nonresident career course teaching item indicates that you have fulfilled, at least in part, the stated objective(s).

The accomplishment of certain objectives, for example, a physical act such as drafting a memo, cannot readily be determined by means of objective type nonresident career course items; however, you can demonstrate by means of answers to teaching items that you have acquired the requisite knowledge to perform the physical act. The accomplishment of certain other learning objectives, for example, the mental acts of comparing, recognizing, evaluating, choosing, selecting, etc., may be readily demonstrated in a nonresident career course by indicating the correct answers to teaching items.

The comprehensive objective for this course has already been given. It states the purpose of the course in terms of what you will be able to do as you complete the course.

The detailed objectives in each assignment state what you should accomplish as you progress through the course. They may appear singly or in clusters of closely related objectives, as appropriate; they are followed by items which will enable you to indicate your accomplishment.

All objectives in this course are learning objectives and items are teaching items. They point out important things, they assist in learning, and they should enable you to do a better job for the Navy.

This self-study course is only one part of the total Navy training program; by its very nature it can take you only part of the way to a training goal. Practical experience, schools, selected reading, and the desire to accomplish are also necessary to round out a fully meaningful training program.

Learning Objective: Recognize the general duties of a Fireman and identify the basic military and professional requirements for advancement. Textbook pages 1 through 4.

1-1. A Fireman trains for what group of ratings?
1. Ordnance
2. Operations
3. Supply
4. Engineering

1-2. Aboard ship, the tasks performed by a Fireman include standing security and fire watches in the engineering spaces and serving as messenger for damage control repair parties.

1-3. The petty officers you assist aboard ship will give you opportunities to perform tasks on your own before showing you how to do them.

1-4. The knowledge factors of a professional or a military requirement for advancement are subdivisions of the requirement that specify the
1. mental skills one must have to perform the duties of the rating
2. physical skills one must have to perform the duties of the rating
3. performance tests one must pass
4. physical skill tests one must pass

1-5. The qualification standards for advancement in rating listed in the Manual of Navy Enlisted Manpower and Personnel Classifications and Occupational Standards are the
1. maximum requirements
2. average requirements
3. minimum requirements
4. suggested, but not necessary requirements

1-6. Which of the following publications should you consult to find the military and professional requirements for advancement?
1. NAVSEA Journal
2. Manual of Navy Enlisted Manpower and Personnel Classifications and Occupational Standards
3. List of Training Manuals and Correspondence Courses
4. Basic Military Requirements

1-7. Before you can take the examination for advancement, there must be an entry in your service record to prove that you have qualified in the
1. professional qualifications
2. knowledge factors
3. military qualifications
4. practical factors

1-8. Upon being transferred to another duty station, you should make sure that your NAVEDTRA 1414/1 is
1. among your personal papers
2. retained by your division officer
3. destroyed and a new one started at your new duty station
4. in your service record

1-9. The final requirement that must be met before you are eligible to take the examination for advancement is the
1. required length of service in pay grade
2. satisfactory completion of the practical factors for the next higher rate
3. completion of training manuals for the next higher rate
4. recommendation by your commanding officer

1-10. A recommended publication for finding titles of reference materials to help you prepare for your servicewide examination is the latest revision of
1. Bibliography for Advancement Study
2. NAVSHIPS Technical Manual
3. Manual of Qualifications for Advancement in Rating
4. Military Requirements for Petty Officer 3 and 2

1-11. How will you recognize the training manuals in the Bibliography for Advancement Study that you must complete to become eligible to take an examination for advancement?
1. They are listed by title in a special column under your rating
2. Their titles are each marked with a dagger
3. They are listed by title in a "mandatory completion" column
4. Their titles are marked with an asterisk

1-12. Which of the following publications will be useful to you when you study for advancement in rating?
1. Tools and Their Uses
2. Blueprint Reading and Sketching
3. Rate Training Manual
4. All of the above

Learning Objective: Identify the administrative and operational functions of the engineering department and the eleven Group VII ratings. Textbook pages 4 through 16.

1-13. Men assigned to the engineering department will probably be called upon to repair which shipboard equipment?
1. Computers
2. Electric motors
3. Fire control radar sets
4. Loran gear

1-14. Assistants to the engineer officer usually include the
1. damage control assistant, repair officer, and electronics officer
2. electrical officer, main propulsion assistant, and damage control assistant
3. main propulsion assistant, C division officer, and electrical officer
4. damage control assistant, operations officer, and the main propulsion assistant

1-15. The duties and responsibilities of the engineer officer are established by
1. the Chief of Naval Personnel
2. the commanding officer
3. the Naval Ship Engineering Center
4. U.S. Navy Regulations

1-16. Who aids the engineer officer by screening all his incoming mail and controlling the issuance of directives which he has released?
1. Engineering department administrative assistant
2. Leading Yeoman assigned to the engineering department
3. Leading Yeoman assigned to the ship's office
4. A technical assistant assigned to the engineering department

1-17. In a typical organization of a large ship's engineering department, the main propulsion assistant, the damage control assistant, and the electrical officer are responsible to the
1. gas-free engineer
2. engineer officer
3. engineering division officer
4. NBC defense officer

1-18. Which of the following are duties of the engineering department training officer?
1. Observing instructions given at drills, on watch, and on station
2. Supervising the preparation of training materials
3. Routing information about available service schooling
4. All of the above

1-19. Which of the following responsibilities belongs to the main propulsion assistant?
1. Preparing the Engineering Log and Bell Book
2. Supervising the engineering department yeoman
3. Training ship's personnel in emergency repair work
4. Maintaining the ship's power and lighting systems

1-20. The duty station of a Fireman assigned to the M division of a ship is probably located in one of the
1. enginerooms
2. firerooms
3. repair shops
4. auxiliary spaces

1-21. Which of the following practices are best for learning the locations of steam valves in a ship's fireroom?
1. Ask a petty officer from the R division to point out each valve on the ship's blueprint and then memorize these locations
2. Trace all the steam lines from beginning to end with the aid of the ship's blueprints and diagrams and then ask the engineer officer to point out each valve
3. Memorize the location of all the valves with the aid of the ship's blueprints and verify the information on your first trip through the fireroom
4. Learn the location of a few valves at a time with the aid of the ship's blueprints and diagrams and actually trace steam lines from beginning to end

1-22. The training of personnel to fight fires aboard ship is administered by the
1. ship's training officer
2. damage control assistant
3. administrative assistant to the engineer officer
4. B division leading petty officer

In items 1-23 through 1-27, select the division of the shipboard engineering department from column B that is responsible for the task given in column A.

A. Tasks	B. Divisions
1-23. Operating air compressors	1. R division
1-24. Preserving watertight integrity	2. A division
1-25. Maintaining firefighting equipment	3. E division
1-26. Maintaining gyrocompasses	4. M division
1-27. Operating steam-driven turbogenerators	

1-28. A fireman assigned to E division may be expected to work in which of the following spaces?
1. Main motor room
2. IC room
3. Electric repair shop
4. Each of the above

1-29. Who is responsible for training personnel in nonmedical defensive measures against NBC attack?
1. Ship's training officer
2. Damage control assistant
3. Leading petty officer in A division
4. Leading DC petty officer

1-30. Which of the following are duties of the NBC defense officer?
1. Maintenance of NBC defense equipment
2. Decontamination of personnel and ship
3. Transportation of NBC casualties
4. All of the above

1-31. If one of the voids in your ship is opened, which of the following is the duty of the gas-free engineer to perform?
1. Determine whether personnel may safely enter the void
2. Determine whether it is safe for welding in the area
3. Do both 1 and 2
4. Ensure that each welder in the area has a firewatch checking for explosive gases

1-32. As one of his duties, a division officer recommends changes to the allowance of his division. He makes his recommendations directly to the
1. commanding officer
2. department head
3. division's technical assistant
4. department administrative assistant

1-33. Aboard a large steam-driven ship, the oil king supervises the operation of
1. small boats
2. motion picture projectors
3. transfer and booster pumps
4. steam turbines

1-34. Small boat engineers are usually of what ratings?
1. FN, EN, or IC
2. HT, EN, or FN
3. FN, EN, or MM
4. EN, FN, or MR

1-35. It is desirable that a Fireman striking for an engineering rating (Group VII) have a knowledge of which of the following?
1. Mathematics
2. Physics
3. Mechanical drawing
4. All of the above

In items 1-36 through 1-38, select from column B the rating of personnel who perform the tasks in column A.

A. Tasks	B. Rating
1-36. Pour castings of ferrous metals	1. Molder
1-37. Operate milling machines	2. Boilermaker
1-38. Repair boiler equipment	3. Machinery Repairman
	4. Machinist's Mate

1-39. The main propulsion turbines are maintained by what rating?
1. Boiler Technician
2. Machinist's Mate
3. Machinery Repairman
4. Engineman

1-40. Which of the following ratings has the responsibility for making repairs on the emergency generator diesel engines?
1. Machinist's Mate
2. Machinery Repairman
3. Engineman
Electrician's Mate

1-41. Hull Maintenance Technicians perform which of the following duties?
1. Plan, supervise, and perform tasks necessary for fabrication, installation, and repair of all types of structures
2. Perform tasks relating to shipboard damage control, CBR defense, and firefighting
3. Supervise and train personnel in maintenance, hull repair, CBR defense, and damage control
4. All of the above

Learning Objective: Recognize the basic principles of physics that apply to shipboard machinery and equipment to produce work. Textbook pages 17 through 21.

1-42. Matter can be defined as anything that occupies space and has definite
1. shape
2. volume
3. weight
4. visibility

1-43. What is meant by the inertia of a stationary object?
1. Quantity of matter which the object contains
2. Force with which the object is pulled toward the center of the earth
3. Physical property that keeps the object at rest
4. Measurement of the mass and the weight of an object

1-44. An object moving at a constant velocity will continue moving at the same speed in the same direction until acted upon by some outside force.

1-45. Which of the following definitions describes the force that is exerted on a stationary object?
1. A push or pull with which you cause or try to cause an object to move
2. A quantity that keeps the object at rest
3. A quantity of matter contained in the object
4. A physical property that causes a moving object to continue moving

1-46. Which of the following is a measure of velocity?
1. 50 revolutions
2. 50 rpm clockwise
3. 50 rpm per sec counterclockwise
4. 50 rpm per sec clockwise

Information for items 1-47 through 1-49: Assume that an object at rest was placed in motion and moved along a straight path. During the first 4 minutes of travel, the velocity of the object was marked at 1-minute intervals as shown by the following table:

Mark	Velocity
0-minute	0 ft/sec
1-minute	5 ft/sec
2-minute	20 ft/sec
3-minute	10 ft/sec
4-minute	15 ft/sec

1-47. What was the average acceleration of the object during the first minute?
1. 0 ft per sec
2. 2.5 ft per sec
3. 15 ft per sec
4. 20 ft per sec

1-48. The object was decelerating between the second and third minute marks.

1-49. During the first 4 minutes, the object accelerated and decelerated at uniform rates.

In items 1-50 through 1-53, select from column B the source of the type of energy in column A.

A. Type of Energy	B. Source
1-50. Mechanical	1. Sun
1-51. Electrical	2. Battery
1-52. Nuclear	3. Auto piston
1-53. Thermal	4. Reactor

1-54. Which of the following situations indicates potential energy?
1. Water striking a water wheel
2. Water behind a dam
3. Steam passing through a nozzle
4. Water being converted to steam

1-55. Energy that exists because of the relative velocities of two or more objects is called
1. potential energy
2. kinetic energy
3. energy in transition
4. both energy in transition and potential energy

1-56. Expended energy can be measured in work units of
1. horsepower
2. specific heat
3. Btu
4. foot-pounds

In items 1-57 through 1-59, select the definition from column B that best describes the term in column A.

A. Term	B. Definition
1-57. Energy	1. Application of force through a distance
1-58. Power	2. Capacity for producing an effect
1-59. Work	3. Amount of force per unit area
	4. Time rate of doing work

1-60. How much work is done when a 60-pound box is raised from the ground to the top of an 80-foot platform?
1. 60 ft-lb
2. 140 ft-lb
3. 480 ft-lb
4. 4,800 ft-lb

1-61. A motor-driven hoist lifts a 165-pound load to a height of 50 feet in 30 seconds. How much power does the motor develop?
1. 1/4 hp
2. 1/2 hp
3. 3 hp
4. 10 hp

1-62. What is the horsepower of a pump that can lift 2,500 lb of water per minute from a depth of 66 feet?
1. 4 hp
2. 5 hp
3. 6 hp
4. 40 hp

1-63. How much work can be done by a 4-horsepower engine?

1. 2,200,000 foot-pounds of work per minute
2. 132,000 foot-pounds of work per minute
3. 22,000 foot-pounds of work per minute
4. 142,000 foot-pounds of work per hour

1-64. According to Charles' law, if the temperature of a flexible container of air were doubled, the volume of air would

1. be reduced by one-half
2. be reduced to one quarter the original volume
3. remain constant but the pressure would double
4. be increased to twice the original volume

1-65. A 5-gallon closed steel tank is full of water. What happens to the pressure and volume of the water in the tank when its temperature rises?

1. Pressure increases; volume remains constant
2. Pressure decreases; volume increases
3. Both pressure and volume remain the same
4. Pressure decreases; volume remains the same

Assignment 2

Engineering Fundamentals; Ship Propulsion; Basic Steam Cycle

Textbook Assignment: Chapters 3, 4, and 5

Learning Objective: Recognize the basic principles of physics that apply to shipboard machinery and equipment to produce work. Textbook pages 21 through 30.

2-1. Compared with water, how heavy is mercury?
1. One-fourteenth as heavy
2. The same weight
3. Fourteen times as heavy
4. Fifty times as heavy

2-2. The forces in a mercurial barometer which balance each other are the
1. forces exerted by the atmosphere and the weight of a column of mercury
2. force exerted by steam under pressure and the force exerted by the weight of a column of mercury
3. weight of a column of mercury plus the force exerted by the air in the tube above the mercury, and the force exerted by the atmosphere plus 14.7 psi
4. weight of a column of mercury, and the pressure of the vacuum above the mercury plus the force exerted by the atmosphere

2-3. At sea level the absolute pressure in an air tank measures 31 inches of mercury. How much more or less than atmospheric pressure is the pressure in the air tank?
1. 1 inch less
2. 1 inch more
3. 2 inches less
4. 2 inches more

2-4. If a barometer reads 28 inches of mercury, what is the atmospheric pressure in pounds per square inch?
1. 0.98 psi
2. 13.72 psi
3. 14.70 psi
4. 16.68 psi

2-5. At sea level the pressure in a tire is 24 psi gage. The absolute pressure in the tire is approximately
1. 9 psi
2. 24 psi
3. 33 psi
4. 39 psi

2-6. The pressure of the air in a space at sea level is 27 in. of mercury. What is the pressure reading of the vacuum gage?
1. 3.0 in. of mercury
2. 12.3 in. of mercury
3. 27.0 in. of mercury
4. 44.7 in. of mercury

2-7. What is the absolute pressure of a space for which the vacuum gage reading is 20 in. of mercury?
1. 10 in. of mercury
2. 20 in. of mercury
3. 30 in. of mercury
4. 40 in. of mercury

2-8. What is the approximate absolute pressure of a space in which the vacuum gage reading is 4 in. of mercury?
1. 2.0 psi
2. 4.0 psi
3. 12.7 psi
4. 16.7 psi

2-9. If a pressure gage must be located at a point below the pipe of the pressure line being measured, the reading on the gage includes the [illegible] exerted by the weight of the [illegible] liquid above the gage.

2-10. FA Williams obtains a reading on a water pressure gage of 18 psi. The gage is located 3 feet above the water pipe. Williams calculates the actual pressure of the water to be
1. 16.7 psi
2. 18.0 psi
3. 18.4 psi
4. 19.3.psi

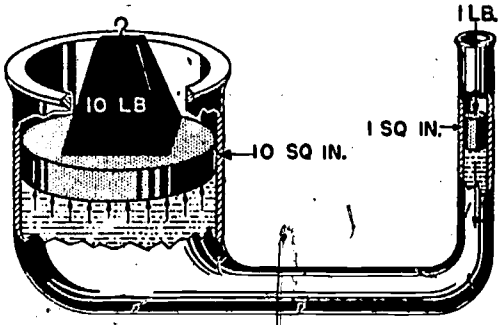

Figure 1A.

Items 2-11 through 2-14 are related to figure 1A.

2-11. If a certain force is applied to the small piston, what are the relationships between pressures in various parts of the system?
1. The pressure on the small piston is greater than the pressure on the large piston
2. The pressure on the small cylinder is the same as the pressure acting against the small piston and is greater than the pressure in the large cylinder
3. The pressure in the connecting tube is the same as the pressure in the small cylinder and is greater than the pressure in the large cylinder
4. The pressure is the same on all parts of all surfaces that enclose the liquid

2-12. If the weight on the large piston just balances the weight on the small piston it follows that the
1. force per unit of area is the same on both pistons
2. weights on the two pistons are equal
3. force on the large piston equals that on the small piston
4. pressure is greater below the small piston than it is below the large piston

2-13. What is the relationship between A, the force applied to the small piston, and B, the force exerted by the large piston?
1. Force B minus force A = 10 lb
2. Force B is 10 times force A
3. Force A plus force B = 10 lb
4. Force A is 10 times force B

2-14. The area of the small piston in a hydraulic press is 3 square inches and the area of the large piston is 75 square inches. If a force of 50 pounds is applied to the small piston, the large piston will (neglecting frictional losses) exert a force of
1. 25 lb
2. 250 lb
3. 725 lb
4. 1,250 lb

2-15. How is the water removed from the main ballast tanks when a submerged submarine is surfacing?
1. Motor-driven pumps syphon off the water
2. The water is forced out with air
3. The water flows out through the ports under the pull of gravity
4. Hydraulic pumps syphon off the water

2-16. The heat produced in a nail which is being hammered into a piece of wood is energy caused by
1. physical changes in the nail
2. the increased motion of the molecules in the nail
3. chemical changes in the nail
4. the friction between the hammer and the nailhead

2-17. Heat is defined as the flow of thermal energy.

2-18. How many calories are there in 25 British thermal units?
1. 25
2. 252
3. 2,520
4. 6,300

2-19. In which of the following forms of matter are the molecules closest together?
1. Steel
2. Boiling water
3. Gas
4. Chilled water

2-20. A block of ice at 32° F is allowed to melt into water at 32° F. The thermal energy needed to bring about this change of state is referred to as
1. internal heat
2. specific heat
3. latent heat of fusion
4. sensible heat

2-21. How much heat is required to change 10 lb of ice at 32° F to water at 50° F?
1. 180 Btu
2. 1,440 Btu
3. 1,620 Btu
4. 16,200 Btu

2-22. How much heat is required to change 10 lb of water at 82° F to steam at 212° F?
1. 82 Btu
2. 130 Btu
3. 1,300 Btu
4. 11,000 Btu

2-23. When ice is changed to steam, the greatest amount of heat is required for
1. changing the ice at 32° F to water at 32° F
2. heating the water from 32° F to 150° F
3. heating the water from 150° F to 212° F
4. changing the water at 212° F to steam at 212° F

2-24. The amount of heat released by steam when it changes into water at the same temperature is called
1. sensible heat
2. latent heat of condensation
3. latent heat of vaporization
4. latent heat of fusion

2-25. A reading of 75° C is equivalent to
1. 160° F
2. 163° F
3. 167° F
4. 170° F

2-26. A reading of 77° F is equivalent to
1. 23° C
2. 25° C
3. 27° C
4. 29° C

2-27. A Fahrenheit thermometer and a Celsius thermometer are placed into water that contains melting ice. What are the lowest possible temperature readings to be expected?
1. 0° on Celsius and 32° on Fahrenheit
2. 0° on Celsius and 0° on Fahrenheit
3. 32° on Celsius and 0° on Fahrenheit
4. 32° on Celsius and 32° on Fahrenheit

2-28. All of the following are products of combustion except
1. sulphur dioxide
2. carbon dioxide
3. nitrogen
4. oxygen

2-29. The completeness with which fuel oil burns in the cylinders of a diesel engine depends on
1. how well the fuel is mixed with air
2. how much air is present in the cylinder
3. how much time the fuel-air mixture is allowed to burn
4. all the above factors

2-30. If water is placed in a closed container and boiled, the steam will be saturated when the
1. pressure in the container increases
2. temperature of the water rises above 212° F
3. temperature of the steam rises above 212° F
4. water changes completely to steam at the temperature of boiling water

2-31. At a pressure of 110 psi absolute, water boils at 335° F. What is the actual temperature of superheated steam at 110 psi absolute when it has 200° F of superheat?
1. 310° F
2. 412° F
3. 535° F
4. 665° F

2-32. If you hammer a sheet of copper into the shape of a hollow bowl, you are taking advantage of what property of the metal?
1. Strength
2. Malleability
3. Hardness
4. Toughness

2-33. What property of a metal permits it to be shaped into wire form or sheets?
1. Strength
2. Ductility
3. Hardness
4. Toughness

2-34. All of the following are ways to reduce corrosion to steel except
1. adding nickel or chromium or both
2. choosing a better grade of base metal
3. painting the surface with a good grade of paint
4. coating the surface with iron oxide

2-35. You can determine whether a metal is ferrous or nonferrous by using a magnet because most metals containing iron are magnetic.

2-36. What technique is used in marking a steel bar according to the continuous identification marking system?
1. A continuous strip of specified width is painted along the entire length of the bar
2. The appropriate marking is painted on with heavy ink at specified intervals along the bar's length
3. The appropriate marking is punched on with a metal stamper at specified intervals along the bar's length
4. The appropriate symbol of specified color is painted on each end of the bar

---

Learning Objective: Recognize the basic principles of ship propulsion. Textbook pages 31 through 33.

2-37. What type of force (thrust) is developed against the velocity imparting devices (shipboard) and causes the ship to move through the water?
1. Acceleration
2. Inertia
3. Reaction
4. Torque

In answering items 2-38 through 2-41, refer to figure 4-1 of your textbook.

2-38. The thrust on the propeller is transmitted to the ship by means of the
1. strut
2. main shaft
3. high-pressure turbine
4. main reduction gear

2-39. The prime mover of the ship's propulsion unit shown in the figure consists of a
1. geared turbine
2. diesel engine
3. generator and turbine
4. generator and diesel engine

2-40. The reactive force along the axis of the main shaft is absorbed by the
1. strut bearing
2. stern tube bearing
3. line shaft bearings
4. thrust bearing

2-41. The strut, stern tube, and line shaft bearings function to support the main shaft and keep it aligned.

Learning Objective: Identify the various types of propulsion units. Textbook pages 34 through 36.

2-42. One of the main differences between a turboelectric drive and a geared turbine drive is that the former uses
1. a smaller ratio to reduce turbine speed to propeller speed
2. a larger ratio to reduce turbine speed to propeller speed
3. a cruising turbine to reduce turbine speed to propeller speed
4. an electrical means instead of a turbine element to reverse propeller shaft rotation

2-43. By which of the following is the speed of a diesel d-c electric-driven ship increased?
1. Increasing generator voltage
2. Increasing engine speed
3. Combining changes in generator voltage and engine speed
4. Any of the above

2-44. In diesel d-c electric-driven ships the direction of rotation of the propeller is reversed by
1. using reverse gears
2. reversing the flow of current through the motor
3. reversing the direction of rotation of the diesel engine
4. reversing the pitch of the propeller blades

2-45. Advantage(s) of the diesel engine over the gasoline engine as the prime mover of a propulsion unit for a naval vessel include
1. less danger of fire
2. cheaper fuel
3. standardized fuels
4. all of the above

Learning Objective: Identify reduction gears and clutches used to convert power to drive. Textbook pages 38 through 47.

2-46. By what means are low propeller-shaft speeds obtained in ships driven by high-speed diesel engines?
1. Clutches
2. Reverse gears
3. Reduction gears
4. Pitch-changing devices

2-47. How are the speeds of turbines and propellers related when a propulsion plant is operating at maximum efficiency?
1. Turbines are operating at high speeds; propellers at low speeds
2. Propellers are operating at high speeds; turbines at low speeds
3. Both turbines and propellers are operating at high speeds
4. Both propellers and turbines are operating at low speeds

2-48. End thrust imparted to a shaft by reduction gearing can be eliminated through the use of
1. single-helical gears
2. double-helical gears
3. spur gears
4. worm wheels

2-49. What is typical about a double reduction propulsion gear arrangement?
1. Each double helical gear used does the work of two single-helical gears
2. Turbine speed is twice propeller speed
3. The rpm produced by the turbine is reduced in two steps
4. Its efficiency is double that of a single-reduction gear

2-50. Most diesel-driven ships and boats are backed down by reversing the
1. pitch of the propeller
2. direction of rotation of the propeller shaft
3. position of the engine relative to the propeller shaft
4. rotation of the engine crankshaft

2-51. Regardless of type or size of installation, the arrangements of clutch, reverse gear, and reduction gear are the same.

2-52. Which of the following statements about clutches is false?
1. Friction clutches can be classified as disk or band and wet or dry
2. Simple friction clutches may be used alone in engines with power ratings as high as 2,000 hp
3. Wear occurs on a wet clutch during engagement, disengagement, and operation
4. Cast iron surfaces are good for friction clutches because they resist scoring and scuffing

2-53. What type of clutch is used in the clutch assembly of the Gray Marine transmission mechanism?
1. Dry-type, single-disk
2. Dry-type, twin-disk
3. Wet-type, single-disk
4. Wet-type, twin-disk

2-54. An astern operation of the shaft and propeller driven by the Gray Marine engine is accomplished by
1. reversing the crankshaft rotation
2. using separate disks and gear trains
3. reversing the forward disk rotation
4. reversing the back plate

2-55. With Joe's clutch and reverse gear, the crankshaft rotation is transmitted to the reduction gear shaft through the
1. crankshaft drive gear extension
2. first reduction gear
3. locked train gearing
4. clutch and reverse gear unit

2-56. What happens when compressed air (100 psi) is admitted into the flexible tire of an airflex clutch while it rotates at engine speed?
1. The clutch moves out of contact with the engine flywheel
2. The clutch makes contact with the engine flywheel
3. Friction blocks on the inner tire surface make contact with a clutch drum
4. Friction blocks on the inner tire surface move out of contact with a clutch drum

2-57. What is one of the advantages of fluid drives over mechanical clutches?
1. Slippage is completely eliminated
2. No mechanical connection is needed between the engine and the reduction gears
3. Power loss is only 1 percent
4. Driving fluid does not absorb power loss

2-58. What function is served by the dog clutch when it is used in addition to the friction clutch?
1. Engaging it just before engaging the friction clutch speeds up the action of the friction clutch
2. Engaging it after the friction clutch has equalized the speed of the two shafts prevents slipping and minimizes wear of the friction clutch
3. Engaging it at the same time the friction clutch is engaged provides for smoother transfer from one speed to another
4. Engaging it during and after engaging the friction clutch helps to quicken the change from one speed to another and makes for greater smoothness of operation

2-59. The reaction force developed by the force of the water being moved astern by a propeller acts on what part of the propeller?
1. The back
2. The leading edge
3. The root
4. The face

2-60. Which of the following statements with regard to propellers is true?
1. Direction of propeller thrust can be changed on some propellers by changing the pitch of the blades
2. The number of blades on ship propellers varies from two to four
3. Controllable pitch propellers are of the single casting type
4. Left-hand helical propellers, as viewed from astern, turn clockwise to move the ship forward

---

Learning Objective: Recognize the four areas of operation of the basic steam cycles. Textbook pages 49 through 53.

2-61. The amount of latent heat required to change boiling water to steam is the same regardless of the pressure in the generating container.

2-62. Suppose you boil the water in two containers, A and B. A is an open container and exposed to atmospheric pressure, whereas B is a closed container in which the pressure is greater than the atmosphere. What is the relationship between the temperatures of the water boiling in the containers?
1. The water temperature in A is higher than that in B
2. The water temperature in A is lower than that in B
3. The water temperature in A is 212° F, which is the same as that in B
4. The water temperature in A is 212° F, which is greater than that in B

2-63. What is the purpose(s) of the superheater furnace shown in the textbook figure 5-2?
1. Raise the temperature of the saturated steam
2. Draw the saturated steam from the generating furnace
3. Raise the temperature of the feed water without increasing pressure
4. Do each of the above

2-64. For which of the following reasons are naval boilers designed to produce both saturated and superheated steam?
1. Because superheated steam for propulsion is more efficient than saturated steam
2. Because most auxiliary machinery operates on saturated steam
3. Both 1 and 2 above
4. Because propulsion and auxiliary machinery operate on saturated and superheated steam and frequently switch from the use of one to the use of the other

2-65. What energy conversion takes place after steam enters the turbine of a steam-driven ship?
1. Heat energy to electrical energy
2. Mechanical energy to heat energy
3. Heat energy to mechanical energy
4. Electrical energy to heat energy

2-66. If your ship's main turbine installation is like that shown in textbook figure 5-1, steam from the boilers is expanded in the
1. cruising turbine
2. high-pressure turbine
3. low-pressure turbine
4. cruising, high-pressure, and low-pressure turbines

For items 2-67 through 2-70, refer to figure 5-1 in your textbook.

2-67. In which part of the steam cycle is air removed from the condensate?
1. A
2. B
3. C
4. D

2-68. The dotted lines enclosing C and D show that the deaerating tank belongs to which parts of the steam cycle?
1. Generation and feed
2. Feed and condensate
3. Expansion and generation
4. Condensate and expansion

2-69. The deaerating tank in the steam cycle is used for which of the following purposes?
1. To remove any trapped oxygen or air from the condensate
2. To preheat the water before it goes to the economizer
3. To serve as a storage tank for reserve feed water and for surplus condensate
4. All the above

2-70. The condensate from part C of the steam cycle first becomes feed water in the
1. economizer
2. top section of the deaerating tank
3. storage section of the deaerating tank
4. piping between the main and booster feed pumps

2-71. The discharge pressure of a main feed pump discharging to a boiler operating at 600 psi is approximately
1. 550 psi
2. 700 psi
3. 750 psi
4. 1,000 psi

2-72. Water is preheated in the economizer by
1. heating it with a superheater located directly under the economizer
2. circulating it in tubes surrounded by the gases of combustion
3. mixing it with jets of hot air that are pumped into the economizer
4. mixing it with hot water discharged from the main feed piping system

2-73. The main difference between the auxiliary steam cycle and the main steam cycle is that the auxiliary does NOT include the
1. condenser
2. deaerating feed tank
3. superheater
4. economizer

Assignment 3

Boilers, Steam Turbines, and Reduction Gears

Textbook Assignment: Chapters 6 and 7

Learning Objective: Identify major components of naval boilers and state their functions. Textbook pages 56 through 71.

3-1. The steam drum of a boiler serves as all of the following except a
1. reservoir for the steam generated in the tubes
2. separator of moisture from the steam generated in the tubes
3. storage space for boiler water which is distributed to downcomers
4. separator of air from the steam generated in the tubes

3-2. Which parts of a boiler function to distribute water equally to the generating tubes?
1. Steam drum and economizer
2. Downcomers and economizer
3. Water drum and sidewall header
4. Sidewall tubes and sidewall header

3-3. The generator tubes in a boiler are 1 to 2 inches in diameter instead of 3 to 4 inches because smaller tubes absorb more heat from the hot gases circulating around them.

3-4. In addition to directing the flow of steam from the sidewall header to the steam drum, the sidewall generating tubes serve to
1. direct the flow of water from the steam drum to the sidewall header
2. protect the sidewall from the intense heat in the furnace
3. distribute water equally to the downcomers
4. direct the flow of combustion gases around the economizer tubes

3-5. Downcomers are used to direct the flow of water from the steam drum into the
1. economizer
2. water drum
3. sidewall header
4. water drum and sidewall header

3-6. Refractory material is used to line the steel casing of a boiler furnace in order to
1. prevent excessive losses of furnace heat
2. help maintain high furnace temperatures
3. protect the casing from the intense heat in the furnace
4. do all of the above

3-7. What boiler component utilizes heat from combustion gases to heat incoming feed water?
1. Air preheater
2. Economizer
3. Deaerating feed-heater
4. Header

3-8. Fins on economizer tubes serve to
1. decrease the weight of the tubes
2. absorb the heat from combustion gases
3. speed the flow of combustion gases
4. increase the capacity of the tubes to hold steam

3-9. Each end of a horizontal superheater tube is connected to a
1. vertical superheater header
2. horizontal superheater header
3. vertical sidewall header
4. horizontal sidewall header

3-10. What type of atomizer is most common and used on most older ships?
1. Return-flow
2. Straight-steam
3. Steam-assist
4. Straight-through-flow

3-11. Which part or parts of an air register in a burner assembly impart a whirling motion to inrushing air?
1. Air doors
2. Diffuser plate
3. Air foils
4. Air doors and diffuser plate

3-1 purpose of the tangential slots in a sprayer plate are to
1. form the cone shaped spray
2. break up the oil into fine particles
3. impart a rotational velocity to the oil
4. mix the fuel with air

3-13. Fire-tube boilers have been replaced by water-tube boilers on most naval ships because
1. fire-tube boilers have a higher concentration of scale-forming salts than water-tube boilers
2. fire-tube boilers are more difficult to examine than water-tube boilers
3. fire-tube boilers are not able to meet the demand for rapid changes in load that water-tube boilers can meet
4. fire-tube boilers have more complicated construction than water-tube boilers

3-14. The circulation of water in natural circulation boilers depends on the difference between the density of rising steam-free water and the density of falling hot water and steam.

3-15. Water is made to run faster in accelerated natural circulation boilers than in free natural circulation boilers by
1. wider nozzles of generating water tubes
2. tubes connecting steam drum to water drum sloping at a steeper angle
3. application of more heat
4. an increased number of downcomers

3-16. Where are downcomers installed on accelerated natural circulation boilers?
1. In the furnace area
2. Between the steam drum and water drums outside the furnace
3. Between the sidewall tubes and inner casing
4. Between the economizer and the superheater

3-17. The superheater tubes in convection-type superheaters are protected from the radiant heat of the furnace by
1. baffles
2. water screen tubes
3. downcomers
4. generating tubes

3-18. The steam from a pressure-fired boiler installed on a 1040-class destroyer escort is used exclusively for
1. propelling the ship
2. distilling sea water
3. heating the crew's berthing spaces
4. laundering

3-19. The basic types of auxiliary boilers used by the Navy include
1. fire-tube boilers
2. water-tube natural circulation boilers
3. water-tube forced circulation boilers
4. all of the above

3-20. Boilers operating at 700 psi burn less fuel for a given shaft horsepower than do boilers that operate at lower pressures.

3-21. When working in a fireroom aboard ship, you should keep your shirtsleeves rolled down at all times.

3-22. Before lighting off a boiler you should remove some of the water from the economizer by using the emergency feed pump.

3-23. You are preparing to put a boiler into operation. Before lighting off the first saturated burner you should be sure to
1. blow down the gage glasses
2. purge the furnace
3. leave disconnected atomizers in place
4. remove the atomizers from the registers

3-24. Which of the following safety precautions applies to the securing of a boiler?
1. Closing the openings to the furnace as soon as the atomizers have been put out
2. Bringing the water level in the gage glass to the point where it shows three-fourths full
3. Closing the master oil valve after the fuel oil pump is secured
4. Each of the above

Learning Objective: Recognize the principles of operation of naval steam turbines and identify major components and their functions. Textbook pages 72 through 81.

3-25. In addition to direction of steam flow, in which way may turbine types be classified?
1. The way in which the steam makes the turbine rotor rotate
2. Type of staging and compounding of steam pressure and velocity
3. Division of steam flow
4. All of the above ways

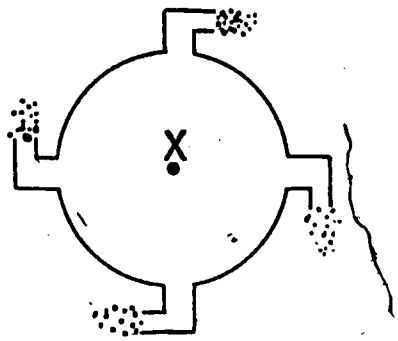

Figure 3A.-Diagram of Hero's engine.

3-26. In figure 3A, the steam escaping from the nozzles causes the engine to
1. remain stationary
2. turn clockwise around point X
3. turn counterclockwise around point X
4. turn alternately clockwise and counterclockwise around point X

3-27. Which of the following devices operates most nearly according to the impulse turbine principle?
1. Hero's engine
2. An electric fan
3. A windmill
4. A jet pump

3-28. What happens to the steam that passes through the steam nozzles of an impulse turbine?
1. It loses pressure and gains velocity
2. It loses pressure and loses velocity
3. It gains pressure and loses velocity
4. It gains pressure and gains velocity

3-29. What happens to the energy in pressurized steam as it emerges from the nozzles of an impulse turbine?
1. Kinetic energy converts to potential energy
2. Potential energy converts to kinetic energy
3. Kinetic energy converts to thermal energy
4. Potential energy converts to mechanical energy

3-30. How are the blades arranged in a velocity-compounded impulse turbine?
1. Two or more rows of revolving blades are followed by a like number of rows of stationary jets
2. One row of stationary blades follows each two rows of revolving blades
3. Revolving and stationary blades are installed in alternate rows
4. Both revolving and stationary blades are provided on each row

3-31. The function of the stationary blades in a velocity-compounded impulse turbine is to
1. increase the velocity of steam
2. direct the flow of steam
3. decrease the velocity of steam
4. increase steam pressure without loss in velocity

3-32. The efficiency of a single-stage impulse turbine is increased by adding
1. rows of moving blades to the rotor wheel
2. simple impulse stages in the same casing
3. either 1 or 2 above
4. rows of fixed blades to the casing

3-33. A reaction turbine is driven by the reaction of the force required to increase the velocity of steam as it passes through the nozzles.

3-34. The length of the blades of a reaction-type turbine is increased at each succeeding stage in order to accommodate the
1. higher turbine speeds
2. steam condensate
3. increased steam pressure
4. increased volume of the steam

3-35. What happens to the steam that passes through each stage of a reaction turbine?
1. It gains pressure and loses velocity
2. It gains pressure and velocity
3. It loses pressure and velocity
4. It loses pressure and gains velocity

3-36. To permit a turbine to expand and contract on its foundation, the turbine is usually installed by securing its
1. forward end rigidly and allowing some freedom of movement to the after end
2. forward and after ends in separate grooves allowing each end to move independently
3. forward and after ends to a sliding sunken plate
4. after end rigidly and allowing some freedom of movement to the forward end

3-37. Which of the following metals is used in the making of turbine casings and rotors to enable them to withstand the effects of superheated 700° F steam?
1. Carbon steel
2. Carbon molybdenum steel
3. Cast iron
4. Bronze

3-38. Which bearings are used in a propulsion turbine to carry the weight of the rotor and to maintain the proper radial clearance between the rotor and the casing?
1. Ball or roller bearings
2. Spherical-seated sleeve bearings
3. Cylindrical sleeve bearings
4. Spherical-seated or cylindrical sleeve bearings

3-39. Propeller thrust bearings and turbine thrust bearings differ chiefly in
1. design
2. size
3. materials from which they are made
4. function

3-40. A function of the turbine rotor-shaft glands is to prevent
1. lubricating oil from leaking into the turbine casing
2. lubricating oil from leaking into the engineroom
3. steam from leaking out of the turbine casing
4. any of the above from happening

3-41. When carbon and labyrinth packing are used in one turbine rotor-shaft gland, how are they arranged?
1. Carbon packing is used in the high-pressure area and labyrinth in the low-pressure area
2. Labyrinth packing is used in the high-pressure area and carbon packing is used in the low-pressure area
3. Carbon and labyrinth packing are used interchangeably
4. When temperatures are to go over 650° F, only labyrinth packing is used

3-42. By what means are low pressure turbine glands sealed at all times to keep air from entering the condenser?
1. By passing auxiliary exhaust steam to the glands
2. By increasing the pressure inside the steam chest
3. By decreasing the temperature inside the steam chest
4. By lubricating the glands with low-viscosity oil

3-43. In low pressure turbines, and gland sealing steam pressure is maintained at approximately
1. 0 to 1 psi
2. 1/2 to 2 psi
3. 2 to 3 psi
4. 1/2 to 4 psi

Learning Objective: Recognize the common forms of reduction gears used in shipboard machinery. Textbook pages 81 through 83.

3-44. Which type of double reduction gearing (if any) do most auxiliary ships use for main propulsion?
1. Nested
2. Articulated
3. Locked train
4. None

3-45. What type of metal is used for the teeth in the pinion gears of the main reduction gears?
1. Bronze
2. Cast steel
3. Forged steel
4. Copper-nickel

3-46. Bull gears are usually secured to their shafts by means of
1. spot welds
2. keys
3. locking nuts
4. keys and locking nuts

3-47. The base section of a bull gear casing is used for several purposes, one of which is to support the
1. main thrust bearing
2. bearing housing for the intermediate pinions
3. bearing housing for the intermediate gears
4. bearing housing for the high speed pinions

3-48. Which gears are used in transmitting motion from a turbine to the shaft of a condensate pump and in reducing turbine speed to pump speed?
1. Pinion and single helical gear
2. Two bevel gears
3. Worm and worm wheel
4. Pinion and double helical gear

Learning Objective: Recognize the characteristics and purposes of lubricating oils and greases used in the Navy. Textbook pages 84 through 87.

3-49. Which of the following is the best definition of friction?
1. Friction is the amount of pressure with which one surface is pressed against another surface
2. Friction is the amount of heat generated between two sliding surfaces
3. Friction is the resistance that one surface offers to its movement over another surface
4. Friction is the ratio of the roughness of one surface to the roughness of another surface

3-50. Under ideal conditions, what kind of friction occurs when a main shaft rotates in a properly oiled main journal?
1. Fluid friction between the molecules of the oil and the suspended foreign matter in the oil
2. Fluid friction between the molecules of the oil and between the film of oil on the shaft and the film on the journal
3. Sliding friction between the main shaft and the main journal
4. Rolling friction between the main shaft and the main journal

3-51. If the correct lubricating oil is replaced by an oil of a higher viscosity, a bearing will be subject to
1. increase in pressure and in operating temperature
2. increase in friction and in operating temperature
3. decrease in friction but increase in operating temperature
4. increase in friction but decrease in operating temperature

3-52. Where are Zerk fittings used?
1. On rotary water pumps
2. On turbine bearings
3. On lube oil pumps
4. On bearings with a heavy load

3-53. Which of the following valves is used to prevent excessive pressure in the oil feed lines of a lube oil pump system?
1. Governor
2. Throttle
3. Reducing
4. Relief

3-54. How do you regulate the temperature of the oil flowing around the tubes of a tube-in-shell type of oil cooler?
1. By regulating the amount of oil flowing around the tubes
2. By regulating the amount of sea water flowing through the tubes
3. By doing both of the above
4. By regulating the amount of air circulating around the cooler

3-55. Assume that you notice a sudden, decided drop in the pressure gage in the oil feed line to the turbine bearings. The Chief Machinist's Mate will immediately order you to
1. slow down the engine until pressure builds up again
2. stop the engine
3. decrease the pressure in the cooling tubes
4. increase the pressure in the cooling tubes

3-56. Mineral lubricating oils can withstand the effects of high temperatures and speeds better than either animal or vegetable oil.

3-57. Assume that 60 cc of a class 3 oil at a temperature of 130° F require 3 minutes to pass through the Saybolt viscosimeter. Which of the following symbol numbers would be used to designate the oil?
1. 1300
2. 1803
3. 3003
4. 3180

3-58. Why does a 2190TEP oil provide reduction gears more protection than a 2190 oil?
1. It resists corrosion better
2. It protects better against the effects of water
3. It can withstand heavier loads
4. It does all of the above

3-59. What type of grease is used as a general purpose grease for light loads and ordinary operating temperatures?
1. Graphite grease
2. Soda soap grease
3. Lime soap grease
4. Lead oleate soap grease

3-60. Which of the following lubricating greases contains a special additive to prevent rusting at high temperatures?
1. Lead oleate grease
2. Extreme pressure grease
3. Graphite grease
4. Oxidation inhibitor grease

3-61. Hard grades of grease are used for lubrication of parts used at
1. high speeds under light pressure
2. medium speeds under medium pressure
3. slow speeds under heavy pressure
4. high speeds under heavy pressure

3-62. If a lubricating chart has not been made up for a certain unit of machinery aboard ship, you should determine the type of lube oil specified for the unit by consulting the manufacturer's technical manual.

Assignment 4

Auxiliary Machinery and Instruments, Pumps, Valves, and Piping

Textbook Assignment: Chapters 8, 9, and 10

Learning Objective: Identify the location and functions of shipboard auxiliary machinery and equipment. Textbook pages 89 through 99.

4-1. The vapor compression refrigeration system is used on naval ships for which of the following applications?
1. Refrigerated cargo
2. Refrigerated ship's stores
3. Ship's service store equipment
4. All of the above

4-2. For Navy ships designed after 1950, the freeze room and chill rooms are kept at which of the following temperatures?
1. 0° F and 33° F, respectively
2. -5° F and 20° F, respectively
3. -10° F and 10° F, respectively
4. -20° F and 5° F, respectively

4-3. The purpose of air conditioning aboard naval ships is to
1. provide comfort for the crew
2. protect equipment from high temperatures
3. increase personnel efficiency
4. do all of the above

4-4. In the vapor compression distilling plant, the source of energy used to heat sea water is
1. steam
2. boiling water
3. electricity
4. furnace gases

4-5. How is fresh water obtained from the vertical basket type of steam-operated distilling plant?
1. By vaporizing preheated feed water over and over again and then condensing the feed water vapor
2. By using steam to boil sea water and then condensing the fresh water vapor given off by the boiling sea water
3. By using combustion gases from a boiler furnace to boil feed water in a coil and then condensing the fresh water vapor given off by the boiling feed water
4. By using combustion gases from a boiler furnace to boil sea water in a coil and then condensing the fresh water vapor given off by the boiling sea water

4-6. When there are two soloshell double-effect evaporator plants aboard a destroyer, they are located in the aft engineroom.

4-7. The two types of steering gear used by the Navy are electromechanical and electrohydraulic.

4-8. In which of the following respects is electrohydraulic steering gear superior to electromechanical steering gear?
1. Dependability and flexibility
2. Savings in weight and space occupied
3. Less friction between moving parts and quicker responses to movements of the steering wheel
4. All of the above respects

4-9. To meet Navy requirements, an anchor windlass must be equipped with brakes and a means of reversing direction.

4-10. The capstan shown in textbook figure 8-7 is used for
1. heaving-in on anchor chain
2. paying-out on anchor chain
3. heaving-in on heavy mooring lines
4. lifting boats

4-11. The three wings on the tubular-type of oil purifier serve to
1. keep the oil rotating at the speed of the bowl
2. collect the sediment or other impurities
3. separate the oil into three layers
4. help accelerate the rotation of the bowl

4-12. Aboard Navy ships, compressed air is used for
1. charging and firing torpedos
2. starting diesel engines
3. operating pneumatic tools
4. all of the above

4-13. Which type of air compressor is used most in the Navy?
1. Centrifugal, turbine-drive
2. Reciprocating, electric-drive
3. Rotary, diesel-drive
4. Rotary, electric-drive

4-14. Medium pressure air compressors are those with discharge pressures that range between
1. 51 and 100 psi
2. 101 and 150 psi
3. 151 and 1,000 psi
4. 1,001 and 1,200 psi

4-15. If pressure fails in the high-pressure tank of a direct plunger lift elevator, what devices check the elevator's fall?
1. Mechanical locks
2. Guide rails
3. Special control valves
4. Automatic quick-closing valves in the oil line

4-16. The speed of the gypsy head of an electro-hydraulic winch is controlled by
1. regulating the operating current of its a-c motor
2. regulating the operating voltage of its a-c motor
3. adjusting the stroke of its hydraulic pump
4. adjusting the clearance between the friction surfaces of its brake

4-17. The galley equipment aboard modern naval ships include all of the following except
1. toasters
2. mixing machines
3. extractors
4. refrigerators

Learning Objective: Recognize the principles of operation and uses of engineering measuring instruments. Textbook pages 100 through 115.

4-18. The gages and other measuring instruments in a shipboard engineering plant enable operating personnel to
1. determine operating efficiency of the plant
2. obtain data for records and reports
3. detect abnormal operating conditions in a system
4. do all the above

In items 4-19 through 4-22, select the type of measuring instrument from column B that provides the kind of measurement in column A

	A. Measurements	B. Instruments
4-19.	Height in inches	1. Pressure gages
4-20.	Turns per minute	2. Liquid level indicators
4-21.	Total gallons	3. Revolution counters
4-22.	Pounds per square inch	4. Fluid flow meters

4-23. On what principle does a Bourdon tube gage work?
1. Volume changes in a straight elastic tube tend to expand the tube
2. Volume changes in a coiled elastic tube tend to collapse the tube
3. Pressure in a straight elastic tube tends to bend the tube
4. Pressure in a curved elastic tube tends to straighten the tube

4-24. The tube in a simplex Bourdon tube gage is connected to a pressure source and to an indicating mechanism. The ends of the tube are fastened to a
1. stationary base and a connecting link, respectively
2. stationary base and a connecting lever, respectively
3. connecting link and a connecting lever, respectively
4. movement support and a gear sector, respectively

4-25. When the pressure being measured with the gage shown in textbook figure 9-2 is increased, the linkage end of the Bourdon tube has a tendency to move so as to cause the
1. gear sector teeth to disengage from the pinion gear
2. tube to become more curved
3. pointer to turn clockwise
4. pointer to turn counterclockwise

4-26. Which of the following measurements is taken with a simplex Bourdon tube gage?
1. Depth of water in a ship's fresh water tanks
2. Amount of fuel oil flowing through a valve
3. Pressure in a compressed air system
4. Pressure drop between inlet and outlet sides of a lube oil strainer

4-27. The duplex Bourdon tube gage can be thought of as two simplex gages in one. However, the duplex gage uses a single
1. gear mechanism
2. dial
3. pointer
4. tube

4-28. The type of gage whose indicating mechanism is shown in figure 9-6 of your textbook is used for measuring pressures that range between
1. 0 and 15 psi gage
2. 16 and 30 psi gage
3. 31 and 50 psi gage
4. 51 and 100 psi gage

4-29. Which type of instrument is best for measuring air pressure in the space between the inner and outer casings of a boiler?
1. Duplex Bourdon tube gage
2. Compound Bourdon tube gage
3. Bellows gage
4. Diaphragm gage

4-30. Which of the following parts is the essential element of a manometer?
1. Bellows
2. Bimetallic strip
3. Diaphragm-covered chamber
4. Liquid-filled U-tube

4-31. Most liquid-in-glass thermometers in shipboard engineering plants are filled with
1. ethyl alcohol
2. benzine
3. mercury
4. dyed water

4-32. The element of a bimetallic dial thermometer responds to a rise in temperature by
1. expanding outward, thereby pressing against the wall of the retaining tube
2. unwinding, thereby twisting the free end of the element
3. contracting lengthwise, thereby pulling the free end of the element inward
4. expanding lengthwise, thereby pushing the free end of the element outward

4-33. Which component is the sensing element of a distant-reading mercury-filled thermometer?
1. Mercury bulb
2. Capillary tubing
3. Flexible cable
4. Bourdon-tube pressure gage

4-34. Which of the following types of thermometers indicates temperature change as a result of pressure-volume changes?
1. Bimetallic
2. Distant-reading
3. Liquid-in-glass
4. Pyrometers

4-35. The metals that make up the actuating element of a pyrometer respond to a rise in temperature by converting heat energy into
1. chemical energy
2. luminous energy
3. electrical energy
4. mechanical energy

4-36. In the static head gaging system, the amount of liquid in a tank is determined by means of a direct measurement and conversion to another unit of measure. Which direct measurement and conversion is used to determine the amount of oil in a fuel oil storage tank?
1. The depth of oil is measured directly in feet and is converted to gallons of oil
2. The pressure of the oil at the tank bottom is measured in inches of mercury and the pressure is converted to gallons of oil
3. The temperature of the oil at the tank is measured directly in degrees and the temperature is converted to gallons of oil
4. The volume is measured directly in cubic feet and volume is converted to gallons of oil

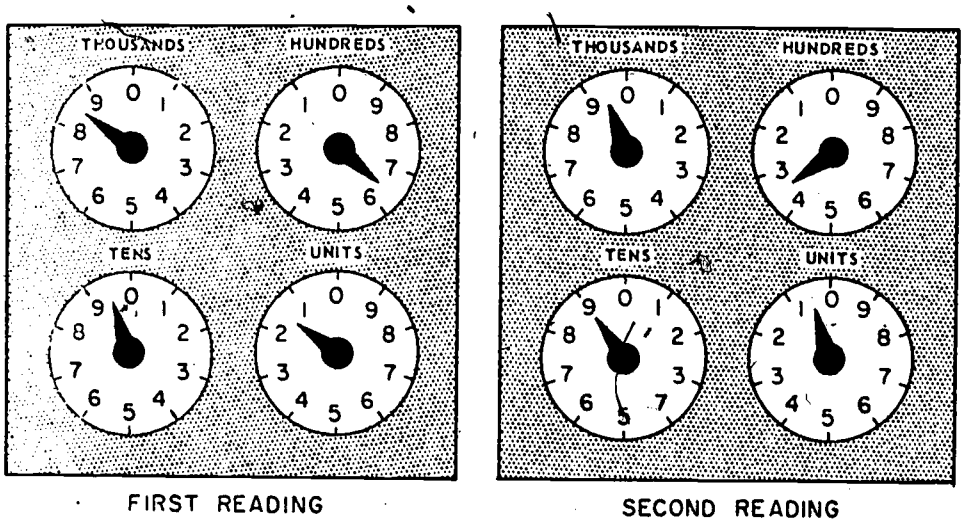

Figure 4A.--Round reading registers.

4-37. The two meter readings of figure 4A were taken 1 hour apart. How much liquid was measured during the hour?
1. 699 gal
2. 869 gal
3. 938 gal
4. 1,129 gal

4-38. Which quantity is measured directly with a revolution counter?
1. Rotational speed of a turbine
2. Rate at which oil flows through a pipe
3. Total number of turns made by a shaft
4. Rotational speed of a pump

4-39. What instrument is commonly used to measure the rotational speed of a shaft?
1. Manometer
2. Tachometer
3. Hydrometer
4. Barometer

4-40. With which kind of tachometer do you make direct contact with a rotating shaft to obtain instantaneous values of speed on a dial face?
1. Centrifugal
2. Chronometric
3. Both 1 and 2 are correct
4. Resonant

4-41. Which of the following types of tachometers can be used to measure the speed of a rotor when there is no access to its rotating shaft?
1. Centrifugal
2. Chronometric
3. Resonant
4. Any of the above

4-42. Which type of tachometer is used to obtain speed readings continuously instead of intermittently?
1. Portable centrifugal
2. Portable chronometric
3. Revolution counter
4. Resonant reed tachometer

4-43. The superheater temperature alarm on a boiler is actuated by an electric microswitch. The force that throws the microswitch is provided by a
1. pressure that is exerted by a rise in temperature
2. cantilever arm that moves when mercury expands in a spiral-wound Bourdon tube
3. revolving gear that meshes with the microswitch
4. torque that is exerted when a bimetallic element is heated

4-44. Which signal is an indication of low pressure at the bearing located farthest from the lube oil pump?
1. Steady red light on a control board
2. Ringing bell or loud siren
3. Intermittent buzzing sound
4. White light flashing on and off

4-45. How is the throttleman warned if he tries to open the ahead throttle valve when the engine order telegraph indicates "astern"?
1. By smoke coming down from the periscope smoke indicator
2. By a flashing light on the throttleboard
3. By a loud signal coming from the wrong direction alarm
4. By a buzzing sound coming from the static head gaging system

---

Learning Objective: Identify some principles of pump operation and specify the ways of classifying pumps, giving essential construction features of different components. Textbook pages 116 through 123.

4-46. What is the name for a device which is able to move a fluid from one place to another through the use of an external power source to apply a force to the fluid?
1. Motor
2. Turbine
3. Pump
4. Valve

4-47. Pumps supply the sea water in a ship's firemain system. Valves in the system furnish the means of controlling the
1. direction that the sea water flows
2. amount of sea water flowing
3. pressure of the sea water
4. direction of flow, amount, and pressure of the sea water

4-48. Which of the following pumps is classified according to the type of movement that causes it to pump?
1. Variable stroke pump
2. Positive displacement pump
3. Self-priming pump
4. Jet pump

4-49. Which of the following pairs of words refer to the same end of a pump?
1. Power end and fluid end
2. Liquid end and pump end
3. Power end and pump end
4. Pump end and steam end

4-50. Aboard ship, you might refer to the power end of a fireroom pump driven by an auxiliary turbine as the
1. rotor end
2. turbine end
3. impulse end
4. steam end

4-51. In which pump is the movement of fluid due to a plunger that moves up and down inside a cylinder?
1. Rotary
2. Reciprocating
3. Centrifugal
4. Propeller

4-52. Why are reciprocating pumps used for emergency feed water pumps on naval vessels?
1. They are easy to operate
2. They are reliable starters under cold conditions
3. They can be started safely even by personnel having little experience
4. All of the above reasons

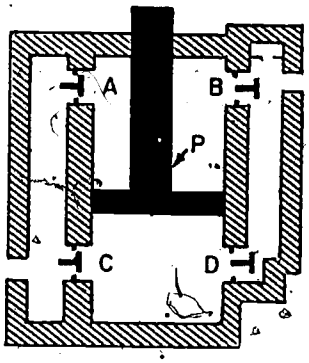

Figure 4B.-Double-acting pump.

4-53. In the pump shown in figure 4B, fluid is discharged on the downstroke through
1. valve B
2. valve D
3. valves B and D
4. valves C and D

4-54. How do the valves move when piston P in the pump shown in figure 4B moves upward?
1. Valves A and C close; valves B and D open
2. Valves A and D open; valves B and C close
3. Valves A and D close; valves B and C open
4. Valves A and B open; valves C and D close

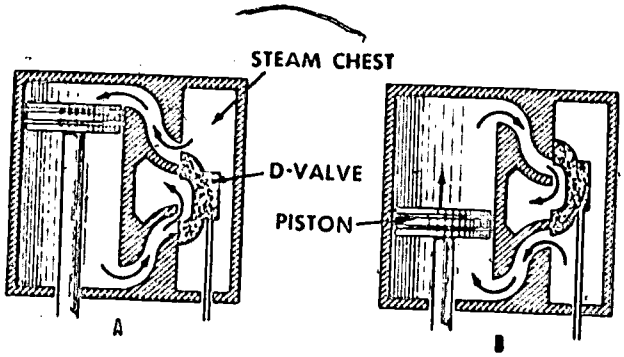

Figure 4C.-Operating principle of D-shaped slide valve of a reciprocating pump.

4-55. The D-valve in the pump, figure 4C is moved up and down by the
1. pressure in the steam chest
2. piston rod through a mechanical linkage
3. movement of exhaust steam through the cylinder ports
4. difference in pressure between the upper and lower halves of the steam chest

4-56. After first closing the throttle in the process of securing a reciprocating pump, the next step you take is to
1. close the exhaust valve
2. close the valves in the discharge lines
3. open the drain valves
4. close the valves in the suction line

4-57. The movement that causes a variable stroke pump to actually pump and by which the pump is classified is brought about by
1. a tilting block rotating inside a cylinder
2. pistons reciprocating inside cylinders
3. propellers rotating inside cylinders
4. an impeller rotating inside a casing

4-58. The piston stroke of a Waterbury variable stroke pump is determined by the
1. size of the cylinder
2. tilt of the angle plate
3. speed of the motor
4. direction of oil flow

4-59. Which condition exists when the tilting box is at right angles to the drive shaft while the pump is rotating?
1. The pistons reciprocate
2. Liquid is pumped
3. No liquid is pumped
4. Power is transmitted hydraulically

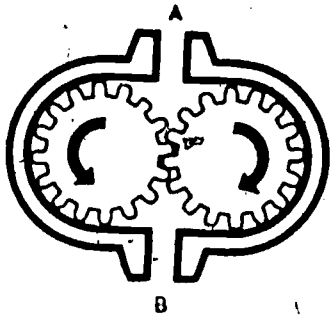

Figure 4D.-Simple gear pump.

4-60. Assume that the gear pump of figure 4D is used for lubricating oil service. How does the oil pass through the pump?
1. Oil moves into the pump through suction side A, passes around the gears in the spaces between the pump case and the gear teeth and discharges through outlet B
2. Oil moves into the pump through suction side A, passes through the two gears, and discharges through outlet B
3. Oil moves into the pump through suction side B, passes around the gears in the spaces between pump case and the gear teeth, and discharges through outlet A
4. Oil moves into the pump through suction side B, passes through the two gears, and discharges through outlet A

4-61. Positive displacement pumps include all of the following except
1. Screw
2. Reciprocating
3. Centrifugal
4. Variable stroke

Assignment 5

Pumps, Valves, Piping, and Shipboard Electrical Equipment

Textbook Assignment: Chapters 10 and 11

Learning Objective: Identify the location and functions of shipboard auxiliary machinery and equipment. Textbook pages 122 through 126.

5-1. The screw pump is similar to the gear pump in that both are
1. positive displacement rotary pumps
2. variable capacity pumps
3. positive displacement centrifugal pumps
4. non-self-priming pumps

5-2. Fluid entering the inlet pipe of a centrifugal pump is first directed into the
1. center of the casing
2. vanes of the impeller
3. space between the impeller vanes and the casing
4. volute diffuser

5-3. What precaution must be taken in the installation of a centrifugal pump to ensure that it will become primed when its intake pipe is open?
1. The intake pipe only is above the surface of the liquid to be pumped
2. The intake pipe only is below the surface of the liquid to be pumped
3. The entire pump is above the surface of the liquid to be pumped
4. The entire pump is below the surface of the liquid to be pumped

5-4. A propeller pump pushes liquid in a direction perpendicular to the shaft.

5-5. Which feature of jet pumps makes them different from all other pumps classified according to the type of movement causing the pumping action?
1. High suction lift
2. No moving parts
3. Self priming
4. Positive displacement

5-6. Jet pumps are classified as ejectors or eductors according to whether steam or water is used to entrain and move fluids.

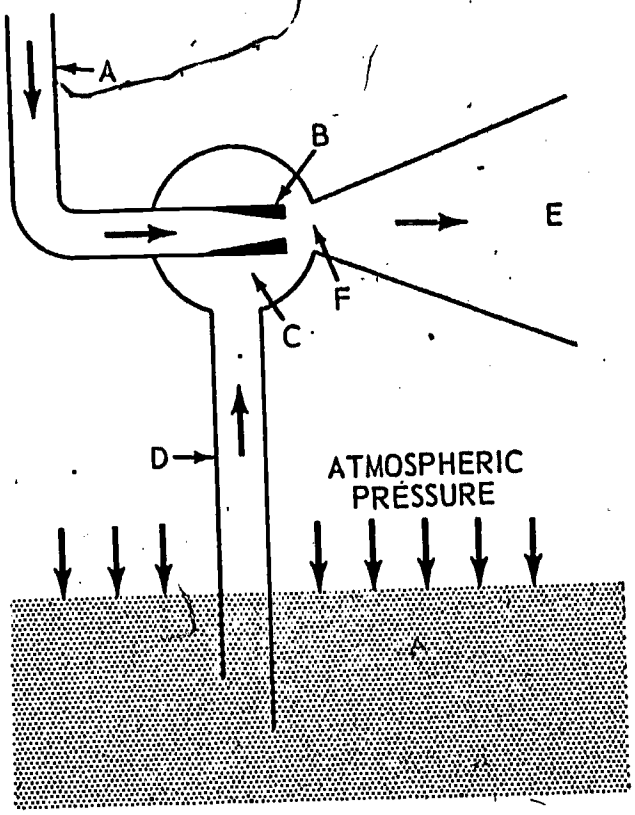

Figure 5A

5-7. Refer to figure 5A. Why is pumping action established after steam lowers the pressure in C by forcing fluid into E?
1. Velocity increase at B draws fluid from A and discharges it through E
2. Pressure difference between C and atmosphere lifts fluid into C and through A
3. Pressure difference between C and the atmosphere lifts fluid into C and through E
4. Velocity increase at B draws fluid from A and discharges it through D

5-8. On new combatant ships, the primary means of dewatering compartments through the drainage system are
1. fire and bilge pumps
2. fixed-type eductors
3. centrifugal fire pumps
4. Waterbury variable-volume pumps

5-9. If a constant-pressure pump governor is attached to a gear pump, the governor is connected to the
1. driving gear
2. driven gear
3. suction line
4. discharge line

Learning Objective: Identify the various kinds and types of shipboard valves, including construction features, their locations, and functions. Textbook pages 127 through 134.

5-10. Refer to textbook figure 10-14. Which parts of the globe valve move when the handwheel is turned counterclockwise?
1. Stem and disk
2. Gland and flange
3. Bonnet and bushing
4. Packing and stop ring

5-11. The special design of back seating valves makes it possible to operate them fully opened with no leakage past the packing.

5-12. Fluid is permitted to flow through the body of a globe stop valve by turning the handwheel in the direction which will cause the
1. disk to lift off the valve seat
2. disk to fit tightly against the valve seat
3. stem to pull away from the packing
4. stem to make contact with the packing gland

5-13. In which way does a gate valve differ from a globe valve?
1. Path of the fluid through the gate valve is straight, through the globe valve the path is not straight
2. Flow is regulated by degrees through the gate valve but not through the globe valve
3. The gate valve works well as a throttle valve, the globe valve does not
4. The gate valve is used in fuel lines only, the globe valve in water lines

5-14. What takes place inside the body of a plug valve when the handle is turned to open the valve?
1. A disk lifts off its seating surface
2. A ball-shaped piece floats off a seating ring
3. A passageway in an otherwise solid piece lines up with the ports in the valve body
4. A wedge-shaped piece rises to create an opening in the passageway through the valve body

5-15. The plug valve may be used as a
1. throttle valve
2. selector valve
3. needle valve
4. check valve

5-16. What type of valve is used in a line where the flow of fluid through an opening must be regulated gradually and exactly?
1. Piston
2. Needle
3. Gate
4. Globe

5-17. You can return a fully opened butterfly valve to its fully closed position by
1. depressing a pushbutton
2. turning the handle to the opposite position
3. lifting up on the handle
4. turning the handle one-fourth a turn

5-18. The swing check valve opens only when the
1. inlet pressure is greater than outlet pressure
2. outlet pressure is greater than inlet pressure
3. inlet pressure is greater than spring tension
4. outlet pressure is greater than spring tension

5-19. Whether a stop-check valve acts as a stop valve or as a check valve depends on the
1. position of the control lever
2. direction of flow
3. type of disk installed
4. position of the stem

5-20. The double-poppet throttle valve is actuated by
1. manual force and power from an electric motor
2. manual force and power from a hydraulic motor
3. steam pressure within the valve and manual force
4. steam pressure within the valve and power from a hydraulic motor

5-21. A relief valve is a type of pressure-control valve that is designed to open automatically when line pressure is too high.

5-22. Whether a relief valve is of the disk type or ball type, it is kept closed by the
1. compression of a steel spring
2. weight of its valve body
3. manual force with which its stem is turned
4. reactive force opposing the manual force used to turn its stem

5-23. Reducing valves used in reduced pressure lines aboard ship are designed to
1. prevent damage to the lines due to excessive pressure
2. keep operating pressure equal to supply pressure
3. vary operating pressure according to demand
4. provide a steady pressure lower than the supply pressure

5-24. What is one of the factors that the operation of a reducing valve depends upon?
1. The valve maintains outlet pressure and inlet pressure in equilibrium
2. The valve maintains outlet pressure at one-half the inlet pressure
3. The inlet pressure controls the rate at which outlet steam passes through the valve
4. The outlet pressure controls the rate at which inlet steam passes through the valve

5-25. A relief valve is never installed as a safety valve on the steam drum of a boiler. Why?
1. It will not remain open long enough for blowdown to occur
2. It will not pop at a specified pressure
3. It will not close tightly without chattering nor remain closed long enough after seating
4. It is not installed because of all the above reasons

Learning Objective: Delineate shipboard piping, including pipe definitions, pipe materials, pipe fittings, gaskets and packing, strainers, steam traps, and drains. Textbook pages 135 through 141.

5-26. Pipe designations that refer to the wall thickness on the pipe include
1. standard
2. extra strong
3. double extra strong
4. all of the above

5-27. If the nominal ID of a double extra strong pipe is 7 inches, its actual ID is
1. less than the actual ID of a 7-inch extra strong pipe
2. more than the actual ID of a 7-inch extra strong pipe
3. more than the actual ID of a 7-inch standard pipe
4. more than 7 inches

5-28. The size of tubing is generally expressed in terms of its
1. actual inside diameter
2. actual inside circumference
3. nominal outside diameter
4. nominal outside circumference

5-29. Steam and fuel oil piping systems aboard ship are made of
1. steel
2. copper
3. brass
4. copper-nickel alloy

5-30. What type of steel tubing is usually used for high-pressure, high-temperature steam service?
1. Seamless carbon steel
2. Molybdenum alloy steel
3. Chromium alloy steel
4. Welded carbon steel

5-31. The composition of the gasket material selected for use in a piping system depends upon all of the following except
1. temperatures to which the fluid carried in the system will be subjected
2. pressures to which the fluid carried in the system will be subjected
3. kind of fluid carried in the system
4. number of strainers installed in the system

5-32. On naval vessels, condensate is removed from steam lines by means of
1. mechanical steam traps
2. thermostatic steam traps
3. impulse steam traps
4. drains and mechanical, thermostatic, and impulse steam traps

---

Learning Objective: Recognize the inherent hazards of electricity and observe all safety precautions when working with or near electrical systems and equipment. Textbook pages 142 through 154.

5-33. Which of the following substances offers the most resistance to electric current?
1. Iron
2. Mica
3. Aluminum
4. Copper

5-34. The rate at which a current passes through a lighting circuit is measured in
1. watts
2. volts
3. ohms
4. amperes

5-35. A unit of electrical resistance is the
1. watt
2. ohm
3. ampere
4. volt

5-36. Assume that a soldering iron is rated at 100 watts. This information tells you about the
1. power consumed by the iron
2. resistance of the iron
3. emf of the iron
4. rate at which current flows through the iron

5-37. A shipboard generator operates at greatest efficiency when operating
1. in series with other generators of same rated output
2. at full rated output
3. at periods of minimum power demand
4. with batteries fully charged

5-38. The rotating member of a d-c generator is usually called the
1. armature
2. yoke
3. field winding
4. rotor

5-39. What is the difference between the systems for delivering current from the a-c generator and from the d-c generator?
1. In the d-c generator, current flows from the commutator to slip rings to the circuit; in the a-c generator, it flows from the stator to brushes to the circuit
2. In the d-c generator, current flows from the rotor to stator to the circuit; in the a-c generator, it flows from the rotor to the circuit
3. In the d-c generator, current flows from the commutator to brushes to the circuit; in the a-c generator, it flows from the stator to the circuit
4. In the d-c generator, current flows from the slip rings to the brushes to the circuit; in the a-c generator, it flows from the brushes to the rotor to the circuit

5-40. Revolving-field generators are superior to revolving-armature generators in that they
1. have their load current from the stator connected to the external circuit without the use of slip rings
2. need only two slip rings to supply excitation to the revolving field
3. do not have their stator windings subjected to mechanical stresses due to centrifugal forces
4. have all the above features

5-41. What provision is made to prevent a high-speed turbine-driven alternator from overheating?
1. A forced ventilation system circulates air through the stator and rotor
2. The alternator is used in conjunction with others and automatically goes off when it becomes warm
3. A heat-limiting governor controls the temperature
4. The alternator parts are encased in a metal structure that is surrounded by cold water

5-42. What is the source of energy for the turbines that drive a ship's service generators?
1. Saturated steam
2. Superheated steam
3. Diesel engines
4. Batteries

237

5-43. One specification that all ship's service generators must meet is that they
1. supply at least 600 volts of electricity
2. operate at a constant speed
3. be able to run indefinitely without shutdown
4. supply alternating and direct current to ship's circuits

5-44. Why are emergency generators aboard Navy ships diesel driven rather than turbine driven?
1. Diesel engines can generate more power than turbines
2. Diesel engines can start faster than turbines
3. Diesel engines are easier to operate than turbines
4. There is less danger of fires from diesel engines than from turbines

5-45. The control switchboard on a destroyer has instruments and controls for paralleling the forward and after ship's service generators and for equalizing the load between them.

5-46. The automatic voltage regulator maintains constant voltage during load change by varying
1. armature resistance
2. field excitation
3. generator speed
4. governor speed

5-47. Switchboards on Navy ships are provided with fuses instead of automatic tripping circuit breakers to protect against voltage failure.

5-48. Which of the following troubles will cause an a-c generator circuit breaker to trip?
1. Gun fire
2. Power reversal
3. Short circuit in a lighting circuit
4. Short circuit in a fresh water pump

5-49. Emergency generators provide electric power to
1. emergency lighting
2. limited lighting and vital auxiliaries
3. limited auxiliaries
4. fireroom auxiliaries

5-50. What is used to supply d-c power to the d-c loads on the new ships that have a-c power plants?
1. Rectifiers
2. Motor generators
3. D-c generators
4. Emergency generators

5-51. What device in a shipboard electrical system will operate when power is suddenly applied to a gun mount and to the anchor windlass at the same time?
1. Circuit breaker
2. Rheostat
3. Voltage regulator
4. Emergency generator

5-52. Although steam is readily available aboard most ships to drive auxiliary machinery, electric power is used for most equipment located outside the machinery spaces. Electric cable is superior to steam piping for transmitting power because it is
1. more easily controlled, less easily damaged, and more durable
2. more durable, more easily repaired, and more convenient
3. less easily damaged, safer, and more easily controlled
4. more easily controlled, safer, and more convenient

5-53. Which of the following pieces of equipment may be equipped with electric brakes?
1. Anchor windlass
2. Switchboards
3. Generators
4. Auxiliary pumps

5-54. Shipboard motor controllers are used for
1. starting and stopping motors
2. increasing and decreasing motor speeds
3. reversing the direction of rotating motor shafts
4. all the above purposes

5-55. The presence of salt water in the electrolyte of a battery can set up a chemical reaction that is damaging to the Battery.

5-56. Assume that you are assigned to a ship's boat as boat engineer. If you see the bowhook pounding on a steel bolt with a steel hammer in the vicinity of the battery compartment, you should stop him immediately in order to prevent
1. damage to the battery case
2. serious injury from spilled electrolyte
3. electrical shock
4. a possible battery explosion

5-57. The relay-operated battle lantern in an emergency lighting circuit turns on automatically when the
1. emergency switchboard is energized
2. relay is connected to the circuit
3. power to the circuit is shut off
4. switchboard emergency circuit is closed

5-58. Hand (battle) lanterns installed throughout the ship that are not connected to relays are used for
1. explosion proof light when needed in newly opened voids
2. necessary lighting when shifting generators
3. areas not covered by the lighting distribution system
4. emergency use only

5-59. Portable power tools in use on Navy ships are provided with three conductors, the third conductor is to
1. provide heavier loads for heavier work
2. protect operators from shock
3. permit reversing of the tool
4. provide emergency service if one of the conductors is damaged

5-60. Normally, electric current for the lights in a ship's machinery spaces is conveyed by the power distribution system.

5-61. Power and lighting distribution systems vary in that the
1. systems have different power sources
2. power distribution systems carry higher voltages
3. power distribution systems are more numerous
4. lighting distribution systems have larger cables

5-62. If a ship's service generators furnish current at 445 volts, what devices are used to step down the voltage to operate 110- to 120-volt equipment?
1. Rheostats
2. Controllers
3. Transformers
4. Voltage regulators

5-63. Only Electrician's Mates or I. C. Electricians should repair electrical equipment aboard a ship.

5-64. You are repairing a motor-driven pump. The motor circuit contains a switch. You will be observing electrical safety precautions when you have an electrician
1. disconnect the motor from the circuit by opening the switch
2. attach a warning tag to the switch
3. connect the motor to the circuit by closing the switch after the repair work is done
4. do all the above

Assignment 6

Internal Combustion Engines and Engineering Watches

Textbook Assignment: Chapters 12 and 13

Learning Objective: Recognize the basic principles of internal combustion engines. Textbook pages 156 through 158.

6-1. An internal combustion engine converts
1. thermal energy to mechanical energy through the use of steam
2. mechanical energy to thermal energy through the burning of fuel in cylinders
3. thermal energy to mechanical energy through the burning of a fuel-air mixture in cylinders
4. mechanical energy to thermal energy through the use of steam

6-2. Combustion takes place in (A) a diesel engine and (B) a gasoline engine as a result of ignition by
1. expansion of compressed gases in A and by a spark in B
2. heat of compression in A and by a spark in B
3. a spark in A and by heat of compression in B
4. a spark in A and by expansion of compressed gases in B

6-3. The one-way distance a piston travels between its upper and lower limits of travel in a cylinder is referred to as a
1. cycle
2. stroke
3. stroke-cycle
4. revolution

6-4. During the intake stroke of a piston in a 4-stroke-cycle diesel engine, the piston moves downward and draws a charge of air into the cylinder through open intake valves while exhaust valves remain closed.

6-5. In the operation of a gasoline engine, the force that pushes the piston downward is the
1. compression of fuel-air mixture
2. intake of fuel-air mixture
3. expansion of burning gases
4. removal of burned gases

6-6. During which of the following piston strokes is power furnished to the crankshaft by the piston?
1. Intake, compression, power, and exhaust
2. Intake, compression, and power
3. Compression and power
4. Power

6-7. Which of the following events in the operating cycle of a diesel engine does not take place in the operating cycle of a gasoline engine?
1. Injection of fuel
2. Compression of air
3. Expansion of gases
4. Removal of burned gases

6-8. With respect to which factor must 2-stroke-cycle diesel engines differ from 4-stroke-cycle diesel engines?
1. Number of pistons
2. Piston arrangement
3. Number of piston strokes in a complete cycle
4. Distance a piston travels during a stroke

6-9. When the piston nears the bottom of the power stroke in the 2-stroke-cycle engine, what is forced through the cylinder intake ports?
1. Fuel oil
2. Scavenging air
3. Lubricating oil
4. Cooling water

6-10. Which of the following reasons partially accounts for the failure of a 2-stroke-cycle engine to produce twice the power of a 4-stroke-cycle engine of the same size?
1. Some power developed by the 2-stroke-cycle engine is used to force air into each cylinder
2. Less than all the combustion gases are scavenged from each cylinder of the 2-stroke-cycle engine
3. For a given air-fuel mixture, less fuel and air enter the cylinders of the 2-stroke-cycle engine
4. Any of the above reasons

Learning Objective: Identify the main components of the diesel engine and indicate their functions. Textbook pages 159 through 164.

6-11. The combustion chamber of a one-cylinder diesel engine is sealed off from the crankcase by
1. a piston and its rings
2. an exhaust valve and an intake valve
3. a piston and an exhaust valve
4. a piston and an intake valve

6-12. The part of a diesel engine used to change rotary motion to intermittent reciprocating motion is the
1. crankshaft
2. driveshaft
3. bearing
4. camshaft

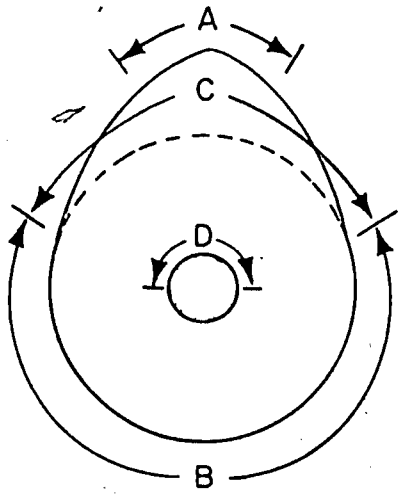

Figure 6A

6-13. Which letter of figure 6A refers to the part of a cam that is known as the cam flat?
1. A
2. B
3. C
4. D

6-14. The exhaust valves in the cylinders of a diesel engine are opened by action of the
1. crankshaft
2. connecting rods
3. valve spring
4. camshaft

6-15. The motion of the cam in a diesel engine is transmitted to the exhaust valves by the action of the
1. rocker arm and the bridge
2. rocker lever shaft and the bridge
3. rocker lever shaft and the cam roller
4. rocker arm and valve guide

6-16. In a 2-stroke-cycle engine, how many times does the camshaft turn as the crankshaft makes 16 turns?
1. 8
2. 16
3. 32
4. 64

6-17. The speed of a reciprocating engine is the same as the speed of the engine's crankshaft. Relative to engine speed, how fast does the camshaft of an 8-cylinder, 4-stroke-cycle engine turn?
1. One-eighth as fast
2. One-fourth as fast
3. One-half as fast
4. Twice as fast

6-18. During the intake stroke of a 4-stroke-cycle engine, air is forced into the cylinder by
1. atmospheric pressure
2. the pressure of exhaust gases
3. rotary blowers
4. unit injector

6-19. Describe the changes in the temperature and volume of the air in a cylinder of a reciprocating engine during the compression stroke of a piston.
1. Temperature increases; volume decreases
2. Both temperature and volume increase
3. Temperature decreases; volume increases
4. Both temperature and volume decrease

6-20. Which of the following compression ratios is typical of diesel engines?
1. 4:1
2. 5:1
3. 10:1
4. 15:1

Items 6-21 through 6-23 refer to the fuel supply system of textbook figure 12-6.

6-21. Which component functions to meter, pressurize, and atomize the fuel?
1. Fuel pump
2. Inlet manifold
3. Injector
4. Outlet manifold

6-22. Which component filters for the last time the fuel that enters the combustion chamber of the engine?
1. Primary filter
2. Secondary filter
3. Fuel pump
4. Injector

6-23. The speed of the engine is controlled by varying the amount of fuel injected into the cylinders of the engine. The fuel charge is varied by
1. rotating the plungers in the unit injectors
2. enlarging the holes in the injector nozzles
3. increasing the capacity of the fuel pump
4. changing the compression ratio of the engine

6-24. Which of the following types of action would most likely be necessary if the lubrication system of an internal combustion engine should fail?
1. Main oil line should be flushed out
2. Oil pressure gage should be replaced
3. Camshaft gear and crankshaft gear should be cleaned
4. Engine should be completely overhauled

6-25. The engine should be secured until the trouble is located and corrected if
1. the oil pressure should drop to lower than normal
2. the temperature of the oil should rise abnormally
3. either 1 or 2 above should occur
4. the oil strainer should become clogged

6-26. Fresh water and salt water are both used as cooling agents in a type of diesel engine. In this engine the function of the sea water is to
1. cool the fresh water after it circulates through the engine
2. replace the fresh water when its temperature exceeds 212° F
3. supplement the supply of fresh water lost due to evaporation
4. slow down the cooling process when higher engine operating temperatures are desired

6-27. How long may the electric starter motor for a diesel engine be operated?
1. 30 to 60 seconds
2. 30 seconds
3. 2 to 3 minutes
4. 3 to 5 minutes

Learning Objective: Identify the main components of the gasoline engine and indicate their functions. Textbook pages 165 through 169.

6-28. In a gasoline engine carburetor the mixture ratio is the number of
1. pounds of gasoline vapor mixed with each pound of air
2. cubic feet of air mixed with each cubic foot of gasoline vapor
3. pounds of air mixed with each pound of gasoline vapor
4. cubic feet of gasoline vapor mixed with each cubic foot of air

6-29. Which of the components of a gasoline engine ignition system belong to the secondary circuit of the system?
1. Battery, ignition switch, and breaker points
2. Distributor cap, distributor rotor, and spark plugs
3. Battery, spark plugs, and condenser
4. Distributor cap, breaker points, and coil

6-30. The device that serves as a selector switch for channeling electricity to the individual cylinders of a gasoline engine is the
1. condenser
2. ignition switch
3. distributor
4. ignition coil

6-31. In the primary circuit of a gasoline engine ignition system, current flows from the ignition coil directly to the
1. spark plugs
2. distributor rotor
3. breaker points
4. battery

6-32. The breaker points of a gasoline engine are protected from burning by
1. a condenser
2. a coil
3. a ground to the engine frame
4. insulators

6-33. A recommended method of cleaning fouled spark plugs is to
1. soak them in cleaning fluid
2. wirebrush or sandblast them
3. rub them with an emery cloth
4. scrub them with warm soapy water

Learning Objective: Identify the main components of the gas turbine engine and indicate their functions. Textbook pages 167 through 169.

6-34. Gas turbines are like reciprocating engines in which of the following respects?
1. Air is compressed
2. A fuel-air mixture is burned
3. Combustion gases are expanded in developing power
4. All of the above respects

6-35. In gas turbine engines compression, combustion, and expansion take place in three separate components while in reciprocating engines these events occur in only one component.

6-36. Which component serves the gas turbine engine as the piston serves the reciprocating engine?
1. Burner
2. Turbine
3. Rotor
4. Compressor

6-37. One advantage the gasoline engine has over the gas turbine is that the gasoline engine
1. uses less explosive fuel
2. consumes fuel at a slower rate
3. needs fewer moving parts
4. accelerates rapidly from cold starts

6-38. Advantages of the gas turbine engine over the diesel engine include all of the following except
1. less vibration at full power
2. smaller number of components
3. faster adjustment to varying loads
4. smaller components for air inlet and exhaust

6-39. Which events occur in the forward section of the gas-turbine engine?
1. Compression and combustion
2. Compression and expansion
3. Combustion and expansion
4. Combustion, compression, and expansion

6-40. Which of the following parts are in the power output section of a gas turbine?
1. Compressor
2. Burner
3. Reduction gear
4. Nozzle

6-41. All of the following gas-turbine engine accessories are driven by the rotor except the
1. fuel pump
2. governor
3. oil pump
4. overspeed switch

Learning Objective: Recognize safe procedures in the operation of small boat engines. Textbook pages 169 and 170.

6-42. You are the engineer of a ship's small boat and the coxswain rings three bells. What does this signal mean?
1. Full speed in the direction in which you are going
2. Ahead slow
3. Reverse
4. Neutral

6-43. After you start a cold diesel engine, your next step is to run it at
1. low speed until it warms up
2. low speed for a minute so you can check the supply of lubricating oil
3. top speed so you can check the fuel and cooling systems for leaks
4. top speed so you can check the oil pressure

6-44. If you find that the exhaust of the diesel engine of a small boat indicates no suction by the water pump during warm-up, you should
1. stop the engine
2. check the cooling system for clogged strainers
3. check the cooling system for closed sea valves
4. do all the above

6-45. A diesel engine has stopped running because fuel is not reaching the engine cylinders. Enough fuel remains in the tank. A possible cause of engine failure is
1. an accummulation of water in the strainers
2. a plugged vent in the tank filler cap
3. a lack of either oil or cooling water
4. either 1 or 2 above

6-46. When a gasoline-powered boat is being driven, which of the following precautions is needed in addition to those that apply to a diesel-powered boat?
1. Being sure that there is enough cooling water
2. Being sure that the vent in the fuel tank filler cap is not plugged
3. Seeing that the engine compartment is ventilated so as to prevent an accumulation of flammable vapors
4. Seeing that there is an adequate supply of lubricating oil

6-47. The cause of fuel system failure in a diesel driven boat is often found to be
1. improper cooling
2. water in the strainers
3. an ungrounded fueling hose
4. faulty spark plugs

Learning Objective: Recognize the duties and responsibilities of the FIREMAN standing engineering watches in port and underway. Textbook pages 170 through 176.

6-48. Which assignment is usually carried out by the messenger of the watch during close maneuvering conditions with other ships?
1. Shaft alley watchstander
2. Telephone talker on the engineering JV circuit
3. Evaporator operator
4. Throttleman

6-49. What is the maximum time lapse between routine entries in the operating log?
1. One half-hour
2. One hour
3. Four hours
4. Twenty-four hours

6-50. If a ship's workday ends at 1600, when is the most likely time period for standing the sounding and security watch?
1. 1600 to 2000
2. 1600 to 2400
3. 1600 to 0400
4. 1600 to 0800

6-51. A sounding tube is generally constructed of
1. 1/2-inch pipe
2. 1 -inch pipe
3. 1 1/2-inch pipe
4. 2 -inch pipe

6-52. Why are some sounding tubes constructed so that they terminate in risers extending about three feet above the ship's compartment to be served?
1. They are unable to be extended to the upper decks
2. They are straight
3. They have an upper end terminating in a flush deck plate
4. They have a closed threaded plug

6-53. Assume that a sounding tape shows a reading of one foot of liquid in a normally dry compartment. What action should be taken?
1. Wait until the next time you take soundings to see if the level has increased
2. Notify the main engineroom so that the level of liquid can be recorded
3. Pass the word about the liquid level to your relief
4. Notify your watch supervisor immediately

6-54. Why should you coat a sounding rod with white chalk before taking a sounding of a water tank?
1. To enable the rod to slip through the sounding tube without bending
2. To make it easier to see the dividing point between the dry and wet parts of the rod
3. To facilitate lowering the rod in the sounding tube
4. To keep the rod from hitting the bottom of the tank with enough force to damage the rod

6-55. Assume that you are on a cold-iron watch and you find that a welder is welding in your area without a fire watch. What action should you take first?
1. Stop the welding
2. Report to the OOD
3. Station a fire watch
4. Bring a fire extinguisher to the area

6-56. When your ship is in drydock, feed water may not be shifted without permission from the
1. officer of the deck
2. chief machinist's mate
3. engineer officer
4. chief boiler technician

6-57. Which of the following jobs will a burnerman carry out on a shakedown cruise while his ship is maneuvering?
1. Control forced draft blower
2. Warming up standby fuel oil pumps
3. Performing routine maintenance
4. Cutting burners in and out

6-58. During regular steaming operations, which watchstanders in the fireroom must cooperate with each other in matters that concern the burning of fuel oil?
1. Blowerman and burnerman
2. Checkman and burnerman
3. Messenger and blowerman
4. Messenger and checkman

In items 6-59 through 6-63, select from column B the fireroom watchstander who performs the job listed in column A. Assume that feed water is being controlled manually.

A. Job	B. Watchstander
6-59. Adjusting the air registers	1. Messenger
6-60. Maintaining the proper water level in the boiler	2. Burnerman
6-61. Regulating fuel oil pressure at the burners	3. Blowerman
6-62. Recording temperature and pressure readings in the operating log	4. Checkman
6-63. Controlling the forced draft blowers	

6-64. You can learn how a normal reading of a throttleboard differs from an abnormal reading by studying the throttleboard and asking the throttleman questions.

6-65. Which watchstander in the engineroom is responsible for keeping both the standby main feed pump and standby lube oil pump ready for instant use?
1. Pumpman
2. Upper level watchstander
3. Shaft alley watchstander
4. Evaporator watchstander

6-66. Who is responsible for maintaining the proper water level in a deaerating feed tank located in the engineroom?
1. Pumpman
2. Upper level watchstander
3. Checkman
4. Evaporator watchstander

6-67. A Fireman Apprentice should learn his duty stations under various conditions of battle readiness by
1. checking with his division officer frequently
2. memorizing the duties of his watch
3. following the orders of the petty officer of the watch
4. checking the Watch, Quarter, and Station Bill frequently

☆U.S. GOVERNMENT PRINTING OFFICE: 1976— 641-277:30

COURSE DISENROLLMENT

All study materials must be returned. On disenrolling, fill out only the upper part of this page and attach it to the inside front cover of the textbook for this course. Mail your study materials to the Naval Education and Training Program Development Center.

PRINT CLEARLY

NAVEDTRA Number
10520-E

COURSE TITLE
FIREMAN

Name Last First Middle

Rank/Rate Designator Social Security Number

COURSE COMPLETION

Letters of satisfactory completion are issued only to personnel whose courses are administered by the Naval Education and Training Program Development Center. On completing the course, fill out the lower part of this page and enclose it with your last set of self-scored answer sheets. Be sure mailing addresses are complete. Mail to the Naval Education and Training Program Development Center.

NAME

ZIP CODE

MY SERVICE RECORD IS HELD BY:

Activity

Address ZIP CODE

Signature of enrollee

PDD Form 111

A FINAL QUESTION: What did you think of this course? Of the text material used with the course? Comments and recommendations received from enrollees have been a major source of course improvement. You and your command are urged to submit your constructive criticisms and your recommendations. This tear-out form letter is provided for your convenience. Typewrite if possible, but legible handwriting is acceptable.

Date_____

From: _____

_____

_____ ZIP CODE_____

To: Naval Education and Training Program Development Center
Building 923
Pensacola, Florida 32509

Subj: RTM/NRCC FIREMAN, NAVEDTRA 10520-E

1. The following comments are hereby submitted:

(Fold along dotted line and staple or tape)

(Fold along dotted line and staple or tape)

DEPARTMENT OF THE NAVY

NAVAL EDUCATION AND TRAINING PROGRAM
DEVELOPMENT CENTER (PDD 4)
PENSACOLA, FLORIDA 32509

OFFICIAL BUSINESS
PENALTY FOR PRIVATE USE, $300

POSTAGE AND FEES PAID
DEPARTMENT OF THE NAVY
DOD-316

U.S. MAIL

NAVAL EDUCATION AND TRAINING PROGRAM DEVELOPMENT CENTER (PDD 4)
BUILDING 923
PENSACOLA, FLORIDA 32509