DOCUMENT RESUME

ED 116 671 IR 002 915

AUTHOR	Gallenson, Louis
TITLE	An Approach to Providing a User Interface for Military Computer-Aided-Instruction in 1980.
INSTITUTION	University of Southern California, Marina del Rey. Information Sciences Inst.
SPONS AGENCY	Advanced Research Projects Agency (DOD), Washington, D.C.; Office of Naval Research, Washington, D.C. Personnel and Training Research Programs Office.
REPORT NO	ISI-RR-75-43
PUB DATE	Nov 75
NOTE	23p.; For a related document see IR 002 916
EDRS PRICE	MF-$0.76 HC-$1.58 Plus Postage
DESCRIPTORS	*Computer Assisted Instruction; *Computer Graphics; Computers; Display Systems; Electronic Equipment; *Equipment Evaluation; Equipment Standards; *Input Output Devices; Military Organizations; *On Line Systems
IDENTIFIERS	Computer Terminals

ABSTRACT

A recent needs study determined that most of the terminal requirements for military computer assisted instruction (CAI) applications can be satisfied with mainstream commercial terminals. Additional development, however, is likely to be required to satisfy two of the capabilities (limited graphics and prerecorded visuals). The expected architecture of commercial terminals will make it easy to modify and customize them to meet all the identified CAI needs. The military community is also expected to use computer networks to satisfy an appreciable portion of its requirements. Commercial terminals and available computer networks provide the basis for an effective and economical user interface to military CAI systems. (Author/EMH)

ARPA ORDER NO. 2930
NR 154-374

ISI/RR-75-43
November 1975

Louis Gallenson

An Approach to Providing a User Interface for Military Computer-Aided Instruction in 1980

INFORMATION SCIENCES INSTITUTE

UNIVERSITY OF SOUTHERN CALIFORNIA

4676 Admiralty Way/Marina del Rey/California 90291
(213) 822-1511

Preparation of this paper was supported by the Office of Naval Research, Personnel and Training Research Programs, Code 458, under Contract N00014-75-C-0710, NR 154-374, under terms of ARPA Order Number 2930.

CONTENTS

INTRODUCTION

As part of an ongoing interest by ARPA HRRO in Computer-aided Instruction (CAI) for the military environment, a study was initiated to determine the user-interface (terminal) subsystem needs in CAI for the 1980's and to provide a functional terminal design to satisfy these needs. The needs study, performed by the Annenberg School of Communications (USC) in conjunction with ISI, is detailed in Ref. 1. A portion of the study's conclusions indicated that

1. Development of new terminal capabilities for military CAI is a low-priority concern.

2. The capabilities of existing terminals (such as the plasma terminal used in PLATO) will suffice for the near future.

3. Commercially developed terminals will satisfy the dominant military CAI needs in the 1980's.

The following document will discuss the functional requirements as well as the terminal design and architecture needed to implement the required capabilities. In light of the conclusions expressed in Ref. 1 it is nonproductive to repeat the functional capabilities available on existing terminals or to discuss an alternate implementation design. Commercial development of terminals will satisfy most of the stated CAI requirements, and little new terminal development is required. It appears that a more interesting and productive approach to conclude the design portion of this study is to discuss the expected architecture and capabilities of commercial terminals now in development. This approach will justify the conclusion that these terminals satisfy military CAI needs and demonstrate how one might advantageously use the flexibility of modern terminal architecture. The question being considered, then, is "*How can the military adapt commercial terminals of the 1980's to CAI needs?*" A related question answered by this document is "Given a large number of general-purpose commercially available on-line terminals in the military community, how can terminals be customized to satisfy CAI needs?"

This document discusses 1) the architecture of the expected commercially available terminals for the late 1970's in the context of military CAI and other DoD requirements, 2) the flexibility of this architecture and methods for satisfying the stated CAI needs and desires with potential economic savings, and 3) the required development effort to satisfy all the stated needs.

FUNCTIONAL REQUIREMENTS

The results of Ref. 1 suggest a set of functions much like the capabilities of the plasma terminal currently in use with the PLATO CAI system: alphanumeric keyboard with special function keys, visual electronic output device with multiple character sets, limited graphics, touch panel inputs, prerecorded visuals, prerecorded voice control device, and adapter for control of other external devices. While the functional capabilities (as seen by the user)

of the plasma terminal and the terminal discussed in this document are the same, the implementation differences and the consequences of these differences are significant.

Several functions were given low priority by the experts: complex graphics, high-resolution stored visuals, spoken inputs, large-capacity displays (4000 characters or more), color, 3-D, and computer-composed speech. Therefore, these functions are not considered in the discussions to follow.

A limited stand-alone capability, which is considered by this author to have a high payoff in the CAI environment, was judged desirable by a few of the experts; it is therefore considered as part of the implementation discussed. The intent of this discussion is to provide the reader with a feeling of the power of the stand-alone capability, not to imply that the study conclusions addressed the question of the desired stand-alone capabilities.

ARCHITECTURE OF TERMINALS

A recent innovation in the implementation of commercial terminals is the use of a microprocessor unit (MPU) LSI chip controller. This technology is flexible and economical and can be expected to improve continually. Because the market for commercial terminals is not monolithic, considerable customizing is required to satisfy the needs of the various segments. By using an MPU and developing a software capability, the vendor can quickly and economically satisfy a large spectrum of user requirements and minimize the amount of random hardware logic design. Current trends strongly tend toward using the MPU for a terminal controller; it is to be expected that all terminals in the late 1970's will adopt this architecture.

The terminal architecture is typified by the functional block diagram of Figure 1. The MPU with its associated memory and interface logic is used to handle data flow between the input devices and output (primarily display). The MPU therefore provides complicated logic between the various I/O devices by interpreting data and instructions within a data stream. The design also has the desirable feature that all I/O interfaces are standardized; 1) serial bit stream with communication logic conforms to RS232 EIA conventions, 2) slow speed I/O conforms to the I/O bus protocol of the MPU, and 3) fast I/O devices (such as the display generator) conform to memory (direct memory-access) logic. Most I/O devices can be satisfied by the MPU I/O bus, which can accommodate large and varying numbers of devices with the appropriate software (or firmware).

The flexibility of the MPU controller is self-evident: it is in fact a general-purpose computer. The LSI chip, the MPU, is a computer with limited instruction set and limited address space. It is typically slow (microseconds for execution time). When used as a controller, the MPU will typically operate from ROMs (Read Only Memory) or PROMs (Programmable ROMs) and becomes more rigid in its ability to change a process (control memory) so that the programs are often called firmware. The MPU, however, works as effectively from RAMs (Random Access Memory) programmed as a conventional computer. Economics dictates the use of ROM rather than RAM when these processors are used as controllers. For the usual controller environment, where a set of predefined tasks is required, the lack of run-time flexibility simplifies the device, from the user's point of

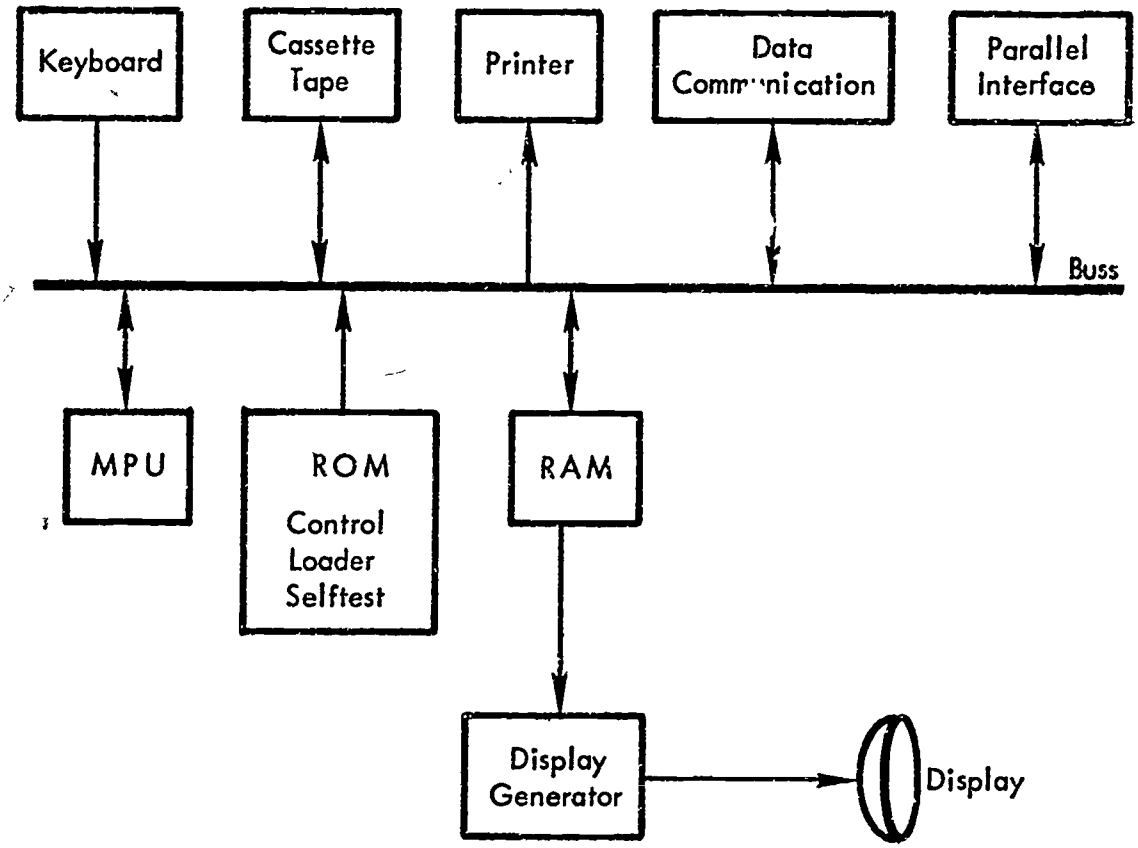

Figure 1 Functional block diagram of the basic terminal

view, and thus may be more desirable. The ability to customize the controller for variations in the user's environment requires the vendor to develop a capability for creating and debugging firmware in an economical manner: the computer programming problem revisited.

CAPABILITIES OF BASIC TERMINALS

The terminals available from commercial vendors in the late 1970's will have many, but not all, of the functional capabilities set forth as CAI terminal requirements. Some mainstream commercial terminals available today have most of these capabilities. The display will probably be video on a cathode ray tube with a display format of about 25 lines of 80 characters per line. The video generation is performed "on-the-fly," refreshing the display from character memory, and does not usually employ a bit map memory (a bit of

memory for each element of the display), which minimizes the capacity of refresh memory. The display generator can operate with multiple character sets (at least four) which can be customized to individual needs. Character description memory can use loadable RAM equally well. The video display also has enhancement capabilities: blinking and underlining of characters, half bright and reverse video. The keyboard is ASCII compatible (also easily customized). It is implemented in typewriter style and also contains function keys, a numeric pad, and special editing and display function keys. A variety of stand-alone (off-line) capabilities can also be expected, including text editing features, tape cassette control, and a self-test capability. Most important for this discussion, the terminal has the ability to expand the memory space and I/O devices on the MPU bus. The complement of standard and optional I/O devices includes tape cassette, printer, communication line interface, and a generalized parallel I/O socket for unspecified devices which can operate with the protocols of the MPU I/O bus.

Four required capabilities not generally provided by the commercial terminal vendor are the prerecorded visuals, the prerecorded voice device, the touch panel, and limited graphics. The voice output and touch panel input (to a lesser degree) are not significant problems, since they are available as off-the-shelf items and require only logical connection to the I/O bus of the terminal. Repackaging of the voice output unit for proper physical attachments and aesthetics does not require a significant amount of development work. Repackaging the touch panel may require some development effort but is not considered difficult or major by the author. Modifications or redesign of the interface logic for compatibility with the I/O bus is also a routine implementation problem. The two capabilities requiring development effort, which may require DoD incentives, are the limited graphics and prerecorded visuals. The implementation of these capabilities is discussed in the latter part of the report.

The potential capability which could provide maximum payoff is the MPU and its use in the terminal. The MPU controller provides a means of providing flexibility, modularity, and maintainability at minimum costs. All I/O devices interface the MPU bus and function with the firmware (or software) provided by the designer, minimizing hard-wired logic and multiple I/O interfaces. The power of the MPU, relatively untested, is in its ability to expand with firmware, providing new terminal capabilities, including some nontrivial stand-alone functions. This power is directly related to the MPU and its speed and address space and the terminal's capability to accommodate the required memory and I/O devices.

MICROPROCESSOR DESCRIPTION

Microprocessor technology is in a state of flux and is difficult to define for the time period being considered (1980). Today's capabilities could be judged related to a number of different currently announced microprocessors, although the conclusions stated throughout the report will be based on the Intel 8080. This selection was made because of convenience, knowledge of the unit, availability of information, etc., not because it has been concluded to be the best available or the best for the task. It has been selected by some terminal manufacturers to be the controller of the next-generation display and is representative of today's technology. The 8080 is an 8-bit, n-channel MOS, LSI,

single-chip microprocessor. It contains an Arithmetic Logic Unit (ALU), 12 general registers, stack pointer and program counter, address and data buffers, and timing and control logic. The 8080 has a typical instruction time of 2 microseconds, supports a single-level interrupt (with support logic to easily handle multiple level interrupts), and provides for 64K bytes of address space. Intel also provides support components--RAM, ROM, PROM, I/O handlers, etc.--to tailor systems to specific needs and advertises software development support to implement appropriate firmware (the microprocessor programs). The estimates for controlling the above described basic terminal is 8K bytes of program space with 2K to 4K bytes of display data space (refresh memory). This allows up to 52K bytes of memory for the implementation of additional features. The microprocessor technology is in its infancy, and much development can be anticipated for the basic processor and the computer system components being developed. The larger microprocessor systems will be competing with today's minicomputer systems and this development can have an impact on CAI systems and the terminal by helping to develop the required software tools.

STAND-ALONE CAPABILITIES OF THE BASIC TERMINAL

The basic terminal has some stand-alone (off-line) capabilities which affect its performance in the CAI application. One, which is long needed for all terminals, is a self-test program. A special function key initiates the execution of a program within the ROM which tests most or all the modules (or printed circuit boards) and reports (usually on the output screen) the results of the test. This module requires a small amount of code and does a credible job of improving the maintainability of the terminals. Self-test checks the ROM and RAM, the two traditionally unreliable elements (as well as other modules), and represents a significant step in the right direction of terminal maintenance.

A second stand-alone capability of the basic terminal with a potential impact on the CAI system design is extended digital mass memory in the form of tape cassettes. The intended market for this capability is off-line text preparation, editing, etc. for eventual transmission to a computer. The basic capabilities of reading and writing tape cassettes can also be used to load programs for MPU execution. The assumption that a loader exists is valid, for most terminals implement a loader for diagnostic purposes. A single tape cassette has a capacity of 100,000 to 500,000 bytes (8 bits) of data with transfer rates from 5000 to 10,000 bytes per second depending on the vendor and terminal. Therefore the capability of loading programs (or lessons) from tape, prepared and mailed at some central location or from communication lines at user's discretion, exists in the basic terminal. The terminal therefore has all the attributes (MPU, RAM, and mass storage) of a stand-alone capability.

The significance of a stand-alone capability and the preparation of courseware for CAI in this mode is beyond the scope of this study. One can speculate, however, that several valid kinds of capabilities could provide some payoff (for example, lessons to aid the user in becoming acquainted with the terminal, the CAI computer system, or in monitoring user actions in using courseware at a remote host computer). The local capability could also be used to personalize the terminal for the individual user, or specific lesson, or to aid in preparing lessons by enhancing the terminal's editing and text preparation capabilities. Using the terminal's stand-alone capability merits additional study and consideration.

The commercial terminal described above is representative of the expected terminal of the 1970's. One can anticipate terminals with more capabilities than those described, especially within the microprocessor controller and the kind of "smarts" implemented to enhance specific user applications. A new industry is growing around small turnkey microcomputer systems (built within a terminal) for specific users, i.e., car salesmen, bank tellers, point-of-sale devices, etc. The field is in its infancy but the competitiveness will produce innovations that could significantly affect all terminals.

MILITARY ENVIRONMENT

The use of on-line terminals within the military environment is sharply increasing, and current estimates indicate that more than 80,000 will be in use by 1985 (see Appendix) These terminals are being used for general-purpose tasks of file updating, documentation preparation, message handling, and general scientific computation as well as the traditional dedicated system terminals for command and control, air defense and traffic control, secure systems, etc. The trend, significant to this discussion, is the use of terminals via networks to host computers for a variety of tasks by a variety of people. The author's expectations are that these terminals will be the basic terminal described in the preceding paragraphs, available from commercial vendors. These conclusions are based on currently authorized procurements of terminals and computers and current implementation plans of the Defense Communication Agency (DCA) for networks to handle the data traffic. DCA is currently the manager of the ARPANET and has initiated a Request for Proposals for design and implementation of an AUTODIN-like communication system using ARPANET technology (store-and-forward packet-switched data handling systems). Also being implemented are systems utilizing the ARPANET and its Host computers (National Software Works, or NSW) to provide user tools for specific tasks such as text editing, programming, data base accessing, etc. The trend of military computer use is toward on-line generalization and providing computer resources at the base level for widespread use and availability. CAI for the military is certainly an appropriate user candidate to take advantage of the existing and planned resources for computer usage.

CAI TERMINALS

Assuming the general availability of the basic terminal which satisfies most of the CAI requirements, how does one implement the specified CAI terminal? The basic terminal has modular construction with well-defined limits of expansion. As additional capabilities are required, modules are plugged into the basic unit, which provides a general I/O interface or specific control for the device being appended. The block diagram of the desired CAI terminal is shown in Figure 2. It is highly probable that the terminal vendor will consider expansion of memory to maximum address space and provide the appropriate space, power, and cooling. The ability to add several I/O devices without extensive modification to the packaging of the terminal remains questionable. Should this pose a problem, the obvious solution is to provide a single I/O multiplexor interface unit within the terminal which will allow the addition of several new devices through an external box. The touch panel and prerecorded voice devices require relatively simple bus interface for MPU control.

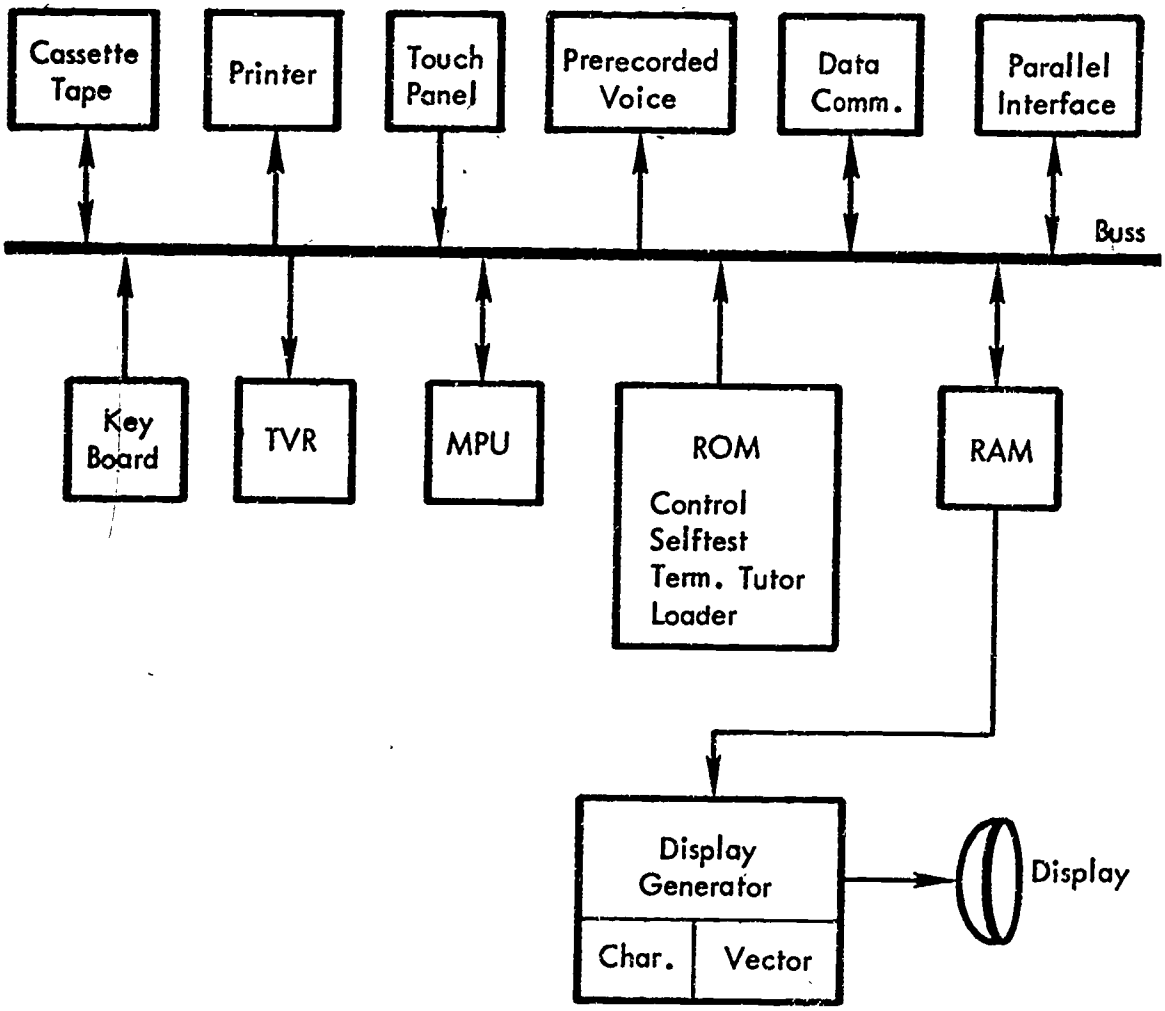

Figure 2 Functional block diagram of the CAI terminal

The interface of prerecorded visuals requires some additional study, for within the more obvious design approaches one is confronted with several options affecting the display function. The two obvious devices for providing the prerecorded media are microfilm in a Random Access Projector (RAP) or magnetic tape or disk in an inexpensive TV recorder (TVR). For the RAP the problem is the projecting surface of the display. The problem disappears if one uses a plasma type display surface, although the mainstream commercial vendors are not using the large plasma panel for economic reasons.

A means of providing the RAP capability with a video display is the use of an optical flat (port) on the cathode ray tube (CRT). This allows rear projection of images on the phosphor and face plate of the CRT; it is a technique being used in several special military displays. The disadvantage of this technique is the high cost and limited availability of the customized CRTs. (Typically these CRTs cost from $500 to $1000 each and may require tooling of from $6000 to $7000, if the glass bulb required is not in current inventories.)

A TVR is a good candidate for providing the image storage medium. It is economical and easily integrated into the terminal. A video input line to the display section and normal I/O bus control is all that is required. However, in an effort to improve the quality of characters displayed, or to provide additional character capacity on the screen, several terminal manufacturers have selected higher-resolution, higher-bandwidth video, not compatible with the normal American TV standard of 525 lines, 30 times per second. Therefore, in selecting a video device one has the option of choosing a lower resolution terminal display or finding (or modifying) a compatible video device to interface the terminal display. The foreign TV market uses higher resolution systems, providing a market for the inexpensive TVR devices being considered and may be available at the required video bandwidth. A TVR can also be used to satisfy the prerecorded voice output requirement. Both the TVR and RAP require a simple I/O bus interface for control.

Limited graphics, typically defined as inexpensive (adding less than $1000 to the cost of the terminal), makes it possible to plot points, as well as to draw vectors and (sometimes) patches. One technique for achieving a subset of these capabilities is with special line drawing character sets to provide vertical and horizontal lines and special block type symbols. Although inexpensive, this capability is probably too limiting for CAI requirements.

The implementation of a limited graphics capabilities for video terminals requires incentives to design and develop the proper module(s). The commercial market for the basic terminal does not seem to require graphics. Most graphic requirements can be satisfied only with the more expensive terminals (greater than $10,000) or with the clustered terminal systems (a controller driving several terminals), which are not being considered as a viable option for the CAI environment. Two vendors of basic terminals (Burroughs and Hewlett-Packard) considered limited graphics as an optional capability with their terminal, and paper designs were completed but never implemented because of lack of interest by the potential market.* The feasibility of implementing inexpensive graphics for video type displays is, however, confirmed.

The design of a graphics module to plug into the basic terminal is the most challenging of all the development efforts being considered. It functionally resembles the character generator, but is more complex and operates at higher speeds. The vector generator interfaces the memory bus and operates on vector order codes, prepared and stored in RAM by the MPU, to produce video. The video is electrically "ORed" to the character generator video to produce the image on the CRT. The graphics commands should be compatible with ARPANET graphics protocols (Ref. 2).

---

* Private communication.

The characteristics of an on-the-fly vector generator for a video terminal produce some unusual design compromises. "On-the-fly" is defined as regenerating the video from a memory containing the vector commands for each frame time (60 times per second), much like the character refresh of these displays. A paper design by the author produced compromises that limit the number of vectors crossing one TV scan to 128 (individual vector descriptors). The compromise is mentioned only to demonstrate the types of design decisions one might expect in providing a vector generator for video displays. The limit of 128 vectors crossing a scan line is not too severe for most applications.

Another requirement to produce graphics is "patches," the ability to produce shaded sections as outlined by the vectors. Patch (half-tone-paint effect) plus a half bright video control provides an effective animation and adds depth to the presentation. Within the design of a video vector generator, patches are easily implemented.

CONCLUSIONS

The terminals required by the military CAI system developers can be acquired from vendors of commercial terminals without a significant amount of development effort. In general, the CAI terminal requirements are not unique or very demanding of the off-the-shelf terminals available in the late 1970's. Two capabilities requiring military incentives for development and implementation with these terminals are a limited graphics and prerecorded visuals. The architecture of the off-the-shelf terminal, a microprocessor controller, will facilitate the integration of these and other future capabilities, for it is consistent with the design goal of providing customized terminals. This capability could provide the greatest economic impact for military CAI, for it makes possible cooperative efforts in using and purchasing terminals.

The ability for sharing terminals within the military community becomes closer to reality--perhaps a necessity--as the proliferation of these terminals continues throughout the military environment. Many of these terminals will be connected to host computers via data communication networks to provide a large spectrum of computer services to military users. For CAI to take advantage of these resources, future design efforts within CAI systems must be compatible with the protocols and data communication specification for the computer network. One conclusion which can be deduced from the above discussion is a CAI system design approach to maximize the use of existing computer services within the military community. The system development effort can be limited to the integration of existing computer capabilities to satisfy the CAI user requirements.

Terminal technology is currently going through dramatic advances. Today's terminals satisfy many CAI needs. With modest additional development, the terminals of the 1980's should satisfy all the currently identified CAI needs.

Appendix

EXCERPTS FROM INTELLIGENT TERMINAL REPORT

The following paragraphs are excerpts, with permission, from an unpublished paper for ARPA on intelligent terminals by Robert H. Anderson of The Rand Corporation, December 1974.

Estimates of Data Terminal Needs

The DCA communications planning document (Ref. 3) is primarily concerned with interbase data communications demands in the 1980's. To establish these, however, the ADP plans of the individual services were examined, which were existing and approved (through FY 1978) ADP systems of the military services and other DoD agencies.

In order to estimate the number of on-line computer and data communications terminals for general purpose and support use (i.e., excluding special-purpose systems) the DCA plan categorizes military installations of the services on the basis of the number of personnel on the installations, and makes certain assumptions about the computer systems and their functions in each installation category. Table 1 presents these assumptions.

Table 1

DCA Planning Assumptions Regarding Interactive Terminals

Installation Category	Personnel	Average number of On-site Computers	Average number of On-site Terminals*	Average Number of Terminals For Off-site Computers**
Large	5,000-50,000	10	150	50
Medium	0lt600-4,999	2.5	85	28
Small	80-599	0.5	11	11
Very Small	8-79	0	0	4
Individual	1-7	0	0	1

* Interactive terminals for accessing the computers at the installation; projected from Air Force estimates.

** Terminals for accessing computer systems not at the given installation; DCA estimates.

Given the number of installations of each category, DCA presents the estimates of total number of terminals for accessing off-site computers for various functions. A representative set of these functions is given in Table 2. The estimated numbers of terminals for each of the services are shown in Table 3. These estimates are based on the expectation of 2,560 on-line, remotely accessible military computer systems in the 1985 time period.

Table 2
Representative Computer Functions and Systems

WWMCS Major and Medium Computer Systems
Base Level Payroll Computer
Base Level Supply Computer
Base Level Personnel and Management Computer
Base Level Personnel Service Computer
Intelligence Support Computer
Regional Logistics Computer
Transportation Computer System
Weather Computational Facility
Scientific and Engineering Computation Facility
Education and Training Management System
Air Traffic Control Facility
Medical Processing and Resource Information System
Medical Research Computer Facility
Legal Information Computer Facility
Computer for Military Reserve Activities
Test and Evaluation Computer Facility

Table 3
Projected Numbers of Terminals, 1985

Installation	Number of Installations			Terminals for Off-site Computers			Terminals for On-site Computers		
	Army	Navy	AF	Army	Navy	AF	Army	Navy	AF
Large	63	39	29	3150	1950	1450	9450	2850	4350
Medium	181	103	120	5068	2884	3360	15385	9755	10200
Small	218	86	173	2398	946	1803	2398	946	1803
Very Small	198	40	429	792	160	1716	0	0	0
Individual	22	45	746	22	45	746	0	0	0
TOTALS				11430	5985	9075	27233	13551	16353

The grand totals of the numbers of terminals projected for each of the services by 1985 are:

Army	38,663
Navy	19,536
Air Force	25,428
Total terminals	83,627

Air Force Estimates of Terminal Needs in 1985

Two Air Force studies of data communications and ADP requirements were completed recently: the *Mission Analysis of Air Force Base Communications 1985* (Ref. 4) was released in April 1974, and *Support of Air Force Automatic Data Processing Requirements in the 1980's* (Ref. 5) was published in June 1974. The latter in particular addresses the future need for interactive terminals and estimates the numbers of such terminals (including intelligent terminals) for Air Force base ADP systems. It is based on a general expectation that the growth of Air Force logistics and support ADP will be 3.5 times the present capability by 1985.

The SADPR-85 projections of terminal needs for different installations are given in Table 4.

Table 4

SADPR-85 Projections of Air Force Terminal Needs

Installation		Average Terminals per Installation		Total Terminals	
Type	Number	All Types	'Intelligent'	All Types	'Intelligent'
Large	103	200	20	20,600	2,060
Medium	29	100	10	2,900	290
Small	11	50	5	550	55
Other*	91	20	2	1,820	182
Totals				25,870	2,587

* Air National Guard and Air Force Reserve bases.

Summary

Figure 3 projects the number of terminal in use in the 1980's by (1) extrapolating the historic growth rate (from 1970 to 1973); (2) by using the DCA estimates in Table 3; and (3) by assuming that other services have the same proportional terminal requirements as the Air Force (as shown in Table 4).

In all cases it is clear that large number of interactive on-line computer terminals will be used in the military services in the 1980's and that built-in intelligence can make their use more efficient and acceptable to the user. In addition, man-computer interaction in weapon systems and in tactical command-control systems is becoming an increasingly critical consideration, and the operators of such systems in aircraft, in ships, or in the field need augmentation of terminal capabilities to increase the effectiveness of the interaction and, thus, of the associated systems.

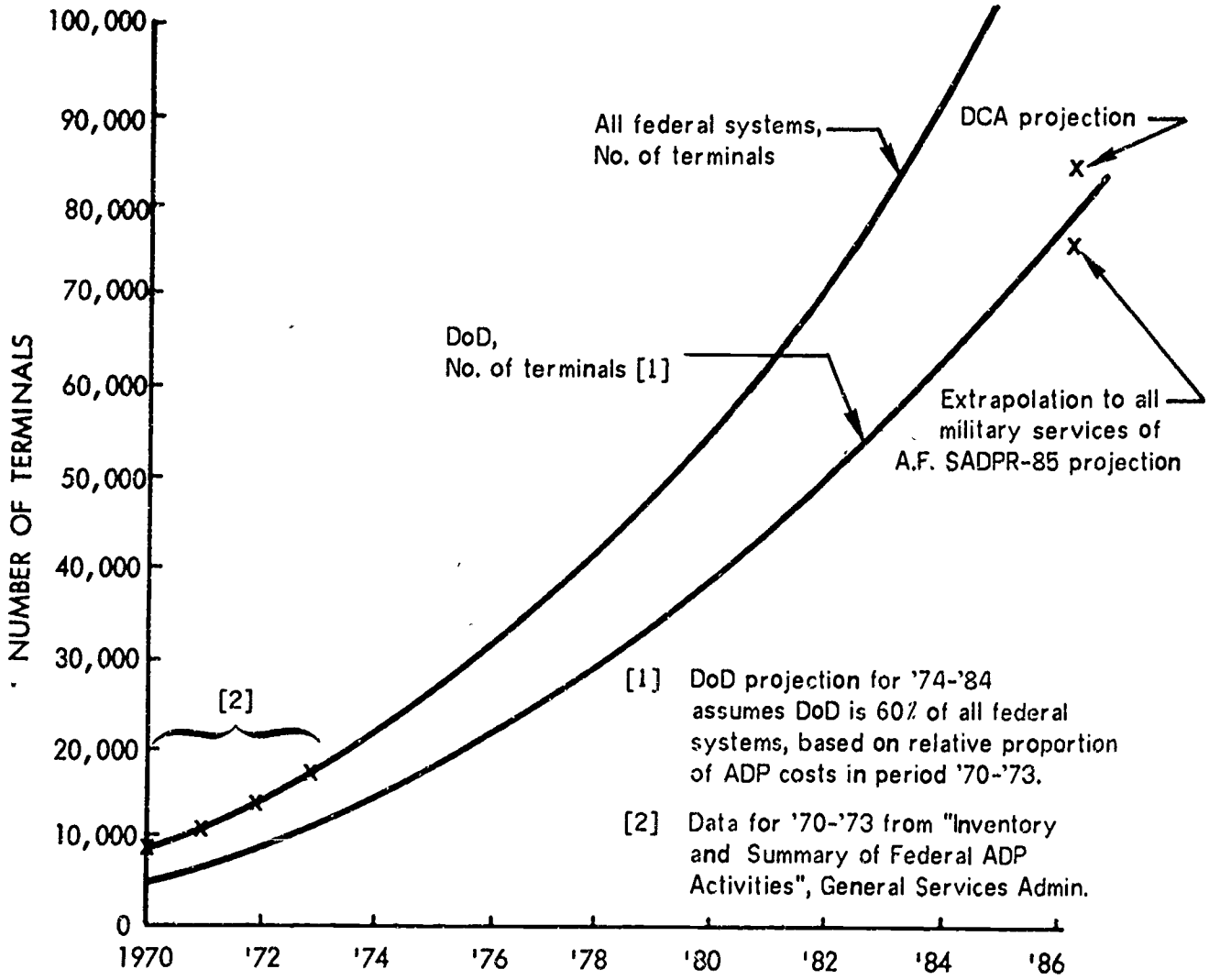

Figure 3. Projected growth in terminals, Federal Government and DoD

REFERENCES

1. Thomas H. Martin, Monty C. Stanford, F. Roy Carlson and William C. Mann, *A Policy Assessment of Priorities and Functional Needs for the Military Computer-Assisted Instruction Terminal* , University of Southern California Annenberg School of Communications, and USC/Information Sciences Institute, ISI/RR-75-44, December 1975.

2. Robert F. Sproul, Xerox PARC, and Elaine L. Thomas, Project MAC, M.I.T., *A Network Graphics Protocol*, August, 1974.

3. *Defense Communications System Plan FY 1975-1986* Vol. I, *Basic Objectives, Planning Factors and Guidance*, Defense Communications Agency, June 1973.

4. *Mission Analysis on Air Force Base Communications--1985*, AFSC Study Facility, Electronics Systems Command, April 1973.

5. *Support of Air Force Automatic Data Processing Requirements in the 1980's (SADPR-85)*, Air Force Systems Command, Electronic Systems Division, June 1974.

Dr. Marshall J. Farr, Director
Personnel and Training Research
Programs
Office of Naval Research (Code 458)
Arlington, VA 22217

ONR Branch Office
536 South Clark Street
Chicago, IL 60605
ATTN: Dr. Charles E. Davis

Dr. M.A. Bertin, Scientific Director
Office of Naval Research
Scientific Liaison Group-Tokyo
American Embassy
APO San Francisco 96503

Office of Naval Research
Code 200
Arlington, VA 22217

Dr. H. Wallace Sinaiko
c/o Office of Naval Research
Code 458
Arlington, VA 22217

Director
Naval Research Laboratory
Code 2627
Washington, D.C. 20390

Technical Director
Navy Personnel Research
and Development Center
San Diego, CA 92152

Assistant Deputy Chief of Naval
Personnel for Retention Analysis and
Coordination (Pers 12)
Room 2403, Arlington Annex
Washington, D.C. 20370

LCDR Charles J. Theisen, Jr., MSC, USN
4024
Naval Air Development Center
Warminster, PA 18974

Dr. Lee Miller
Naval Air Systems Command
AIR-413E
Washington, D.C. 20361

Dr. Leon H. Nawrocki
U.S. Army Research Institute for the
Behavioral and Social Sciences
1300 Wilson Boulevard
Arlington, VA 22209

Dr. Joseph Ward
U.S. Army Research Institute for the
Behavioral and Social Sciences
1300 Wilson Boulevard
Arlington, VA 22209

HQ USAREUR & 7th Army
ODCSOPS
USAREUR Director of GED
APO New York 09403

ARI Field Unit - Leavenworth
Post Office Box 3122
Fort Leavenworth, KS 66027

Mr. James Baker
U.S. Army Research Institute for the
Behavioral and Social Sciences
1300 Wilson Boulevard
Arlington, VA 22209

Dr. Milton S. Katz, Chief
Individual Training & Performance
Evaluation
U.S. Army Research Institute for the
Behavioral and
Social Sciences
1300 Wilson Boulevard
Arlington, VA 22209

DPMYAR
Randolph AFB, TX 78148

Dr. G.A. Eckstrand (AFHRL-AST)
Wright-Patterson AFB
Ohio 45433

Dr. Ross L. Morgan (AFHRL-ASR)
Wright-Patterson AFB
Ohio 45433

AFHRL-DOJN
Stop #63
Lackland AFB, TX 78236

Dr. Kenneth E. Clark
University of Rochester
College of Arts and Science
River Campus Station
Rochester, NY 14627

Dr. Allan M. Collins
Bolt, Beranek and Newman, In
50 Moulton Street
Cambridge, MA 02138

Dr. Rene' V. Dawis
University of Minnesota
Department of Psychology
Minneapolis, MN 55455

Dr. Ruth Day
Yale University
Department of Psychology
2 Hillhouse Avenue
New Haven, CT 06520

ERIC
Processing and Reference Facil
4833 Rugby Avenue
Bethesda, MD 20014

Dr. Barry M. Feinberg
Bureau of Social Science Resear
Inc.
1990 M Street, N.W.
Washington, D.C. 20036

Dr. Victor Fields
Montgomery College
Department of Psychology
Rockville, MD 20850

Dr. Edwin A. Fleishman
Visiting Professor
University of California
Graduate School of Administrat
Irvine, CA 92664

Dr. Robert Glaser, Co-Direct
University of Pittsburgh
3939 O'Hara Street
Pittsburgh, PA 15213

Dr. Henry J. Hamburger
University of California
School of Social Sciences
Irvine, CA 92664

Commanding Officer
U.S. Naval Amphibious School
Coronado, CA 92155

Commanding Officer
Naval Health Research Center
San Diego, CA 92152
Annapolis, MD 21402

Chairman
Behavioral Science Department
Naval Command & Management Division
U.S. Naval Academy
Annapolis, Md. 21402

Chief of Naval
Education & Training
Naval Air Station
Pensacola, FL 32508
ATTN: CAPT Bruce Stone, USN

Mr. Arnold I. Rubinstein
Human Resources Program Manager
Naval Material Command (0344)
Room 1044, Crystal Plaza#5
Washington, D.C. 20360

Dr. Jack R. Borsting
U.S. Naval Postgraduate School
Department of Operations Research
Monterey, CA 93940

Director, Navy Occupational Task
Analysis Program (NOTAP)
Navy Personnel Program Support
Activity
Building 1304, Bolling AFB
Washington, D.C. 20336

Office of Civilian Manpower Management
Code 64
Washington, D.C. 20398
ATTN: Dr. Richard Niehaus

Office of Civilian Manpower Management
Code 263
Washington, D.C. 20398

Office of Naval Reserve
Code 3055
New Orleans, LA 70146

Dr. Martin Rockway (AFHRL-TT)
Lowry AFB
Colorado 80230

Major P.J. DeLeo
Instructional Technology Branch
AF Human Resources Laboratory
Lowry AFB, CO 80230

Dr. Alfred R. Fregly
AFOSR-NL
1400 Wilson Boulevard
Arlington, VA 22209

Capt. Jack Thorpe, USAF
Flying Training Division
AFHRL-FT
Williams AFB, AZ 85224

AFHRL-PED
Stop #63
Lackland AFB, TX 78236

Director, Office of Manpower
Utilization
Headquarters, Marine Corps (Code MPU)
MCB (Building 2009)
Quantico, VA 22134

Dr. A.L. Slafkosky
Scientific Advisor (Code RD-1)
Headquarters, U.S. Marine Corps
Washington, D.C. 20380

Chief, Academic Department
Education Center
Marine Corps Development and
Education Command
Marine Corps Base
Quantico, VA 22134

Mr. E. A. Dover
2711 South Veitch Street
Arlington, VA 22206

Mr. Joseph J. Cowan, Chief
Psychological Research Branch
(G-P-1-62)
U.S. Coast Guard Headquarters
Washington, D.C. 20590

Dr. M. D. Havron
Human Sciences Research, Inc
7710 Old Spring House Road
West Gate Industrial Park
McLean, VA 22101

HumRRO Central Division
400 Plaza Building
Pace Boulevard at Fairfield Dr
Pensacola, FL 32505

HumRRO-Western Division
27857 Berwick Drive
Carmel, CA 93921
ATTN: Library

HumRRO Central Division-Columb
Office
Suite 23, 2601 Cross Country D
Columbus, GA 31906

HumRRO-Western Division
27857 Berwick Drive
Carmel, CA 93921
ATTN: Dr. Robert Vineberg

HumRRO
Joseph A. Austin Building
1939 Goldsmith Lane
Louisville, KY 40218

Dr. Lawrence B. Johnson
Lawrence Johnson & Associates,
2001 S Street, N.W., Suite 502
Washington, D.C. 20009

Dr. Arnold F. Kanarick
Honeywell, Inc.
2600 Ridge Parkway
Minneapolis, MN 55413

Dr. Roger A. Kaufman
U.S. International University
Graduate School of Human Behav
Elliott Campus
8655 E. Pomerada Road
San Diego, CA 92124

Chief of Naval Operations
OP-987P7
Washington, D.C. 20350
ATTN: CAPT H.J.M. Connery

Superintendent
Naval Postgraduate School
Monterey, CA 93940

Mr. George N. Graine
Naval Sea Systems Command
SEA 047C12
Washington, D.C. 20362

Chief of Naval Technical Training
Naval Air Station Memphis (75)
Millington, TN 38054
ATTN: Dr. Norman J. Kerr

Commanding Officer
Service School Command
U.S. Naval Training Center
San Diego, CA 92133
ATTN: Code 03030

Principal Civilian Advisor
for Education and Training
Naval Training Command, Code 00A
Pensacola, FL 32508
ATTN: Dr. William L. Maloy

Director
Training Analysis & Evaluation Group
Code N-00T
Department of the Navy
Orlando, FL 32813
ATTN: Dr. Alfred F. Smode

Chief of Naval Training Support
Code N-21
Building 45
Naval Air Station
Pensacola, FL 32508

LCDR C. F. Logan, USN
F-14 Management System
COMFITAEWWINGPAC
NAS Miramar, CA 92145

Navy Personnel Research
and Development Center
Code 1
San Diego, CA 92152

Military Assistant for Human Resources
Office of the Secretary of Defense
Room 3D129, Pentagon
Washington, D.C. 20301

Advanced Research Projects Agency
Administrative Services
1400 Wilson Boulevard
Arlington, VA 22209
ATTN: Ardella Holloway

Dr. Harold F. O'Neil, Jr.
Advanced Research Projects Agency
Human Resources Research Office
1400 Wilson Boulevard
Arlington, VA 22209

Dr. Robert Young
Advanced Research Projects Agency
Human Resources Research Office
1400 Wilson Boulevard
Arlington, VA 22209

Dr. Lorraine D. Eyde
Personnel Research and Development
Center
U.S. Civil Service Commission
1900 E Street, N.W.
Washington, D.C. 20415

Dr. William Gorham, Director
Personnel Research and Development
Center
U.S. Civil Service Commission
1900 E Street, N.W.
Washington, D.C. 20415

Dr. Vern Urry
Personnel Research and Development
Center
U.S. Civil Service Commission
1900 E Street, N.W.
Washington, D.C. 20415

Dr. Erik McWilliams, Director
Technological Innovations in
Education Group
National Science Foundation
1800 G Street, N.W., Room W 650
Washington, D.C. 20550

Dr. Richard C. Atkinson
Deputy Director
National Science Foundation
1800 G Street, N.W.
Washington, D.C. 20550

Dr. Steven W. Keele
University of Oregon
Department of Psychology
Eugene, OR 97403

Dr. David Klahr
Carnegie-Mellon University
Department of Psychology
Pittsburgh, PA 15213

Dr. Ezra S. Krendel
University of Pennsylvania
Wharton School, DH-CC
Philadelphia, PA 19174

Dr. Alma E. Lantz
University of Denver
Denver Research Institute
Industrial Economics Divisio
Denver, CO 80210

Mr. Brian McNally
Educational Testing Service
Princeton, NJ 08540

Dr. Robert R. Mackie
Human Factors Research, Inc
6780 Corton Drive
Santa Barbara Research Park
Goleta, CA 93017

Dr. Leo Munday, Vice Presiden
American College Testing Prog
P.O. Box 168
Iowa City, IA 52240

Mr. A.J. Pesch, President
Eclectech Associates, Inc.
P.O. Box 178
North Stonington, CT 06359

Mr. Luigi Petrullo
2431 North Edgewood Street
Arlington, VA 22207

Dr. Steven M. Pine
University of Minnesota
Department of Psychology
Minneapolis, MN 55455

Dr. Diane M. Ramsey-Klee
R-K Research & System Desig
3947 Ridgemont Drive
Malibu, CA 90265

Navy Personnel Research and
Development Center
Code 2
San Diego, CA 92152
ATTN: A. A. Sjoholm

Navy Personnel Research
and Development Center
Code 306
San Diego, CA 92152
ATTN: Dr. J. H. Steinemann

Navy Personnel Research
and Development Center
San Diego, CA 92152
ATTN: Library

Navy Personnel Research and
Development Center
Code 9041
San Diego, CA 92152
ATTN: Dr. J.D. Fletcher

D. M. Gragg, CAPT, MC, USN
Head, Educational Programs Development
Department
Naval Health Sciences Education and
Training Command
Bethesda, MD 20814

Technical Director
U.S. Army Research Institute for the
Behavioral and Social Sciences
1300 Wilson Blvd.
Arlington, VA 22209

Armed Forces Staff College
Norfolk, VA 23511
ATTN: Library

Commandant
U.S. Army Infantry School
Fort Benning, GA 31905
ATTN: ATSH-DET

Deputy Commander
U.S. Army Institute of Administration
Fort Benjamin Harrison, IN 46216
ATTN: EA

Dr. Andrew R. Molnar
Technological Innovations in
Education Group
National Science Foundation
1800 G Street, N.W.
Washington, D.C. 20550

Dr. Marshall S. Smith
Assistant Acting Director
Program on Essential Skills
National Institute of Education
Brown Building, Room 815
19th and M Streets, N.W.
Washington, D.C. 20208

U.S. Civil Service Commission
Federal Office Building
Chicago Regional Staff Division
Regional Psychologist
230 South Dearborn Street
Chicago, IL 60604
ATTN: C.S. Winiewicz

Dr. Carl Frederiksen
Learning Division, Basic Skills Group
National Institute of Education
1200 19th Street, N.W.
Washington, D.C. 20208

Dr. Scarvia B. Anderson
Educational Testing Service
17 Executive Park Drive, N.E.
Atlanta, GA 30329

Dr. John Annett
Department of Psychology
The University of Warwick
Coventry CV47AI
ENGLAND

Mr. Samuel Ball
Educational Testing Service
Princeton, N.J. 08540

Dr. Gerald V. Barrett
University of Akron
Department of Psychology
Akron, OH 44325

Dr. Joseph W. Rigney
University of Southern Califor
Behavioral Technology Laborato
3717 South Grand
Los Angeles, CA 90007

Dr. Leonard L. Rosenbaum, Chai
Montgomery College
Department of Psychology
Rockville, MD 20850

Dr. George E. Rowland
Rowland and Company, Inc.
P.O. Box 61
Haddonfield, NJ 08033

Dr. Arthur I. Siegel
Applied Psychological Servic
404 East Lancaster Avenue
Wayne, PA 19087

Dr. Richard Snow
Stanford University
School of Education
Stanford, CA 94305

Dr. C. Harold Stone
1428 Virginia Avenue
Glendale, CA 91202

Mr. Dennis J. Sullivan
c/o HAISC, Building 119, M.S.
P.O. Box 90515
Los Angeles, CA 90009

Dr. Patrick Suppes
Stanford University
Institute for Mathematical Stu
in the Social Sciences
Stanford, CA 94305

Dr. Benton J. Underwood
Northwestern University
Department of Psychology
Evanston, IL 60201

Dr. Carl R. Vest
Battelle Memorial Institute
Washington Operations
2030 M Street, N.W.
Washington, D.C. 20036

Dr. Frank J. Harris
U.S. Army Research Institute for the
Behavioral and Social Sciences
1300 Wilson Boulevard
Arlington, VA 22209

Dr. Stanley L. Cohen
U.S. Army Research Institute for the
Behavioral and Social Sciences
1300 Wilson Boulevard
Arlington, VA 22209

Dr. Ralph Dusek
U.S. Army Research Institute for the
Behavioral and Social Sciences
1300 Wilson Boulevard
Arlington, VA 22209

Dr. Bernard M. Bass
University of Rochester
Graduate School of Management
Rochester, NY 14627

Dr. Ronald P. Carver
School of Education
University of Missouri-Kansas City
5100 Rockhill Road
Kansas City, MO 64110

Century Research Corporation
4113 Lee Highway
Arlington, VA 22207

Dr. A. Charnes
BEB 512
University of Texas
Austin, TX 78712

Dr. David J. Weiss
University of Minnesota
Department of Psychology
N660 Elliott Hall
Minneapolis, MN 55455

Dr. Anita West
Denver Research Institute
University of Denver
Denver, CO 80210

Dr. Kenneth N. Wexler
University of California
School of Social Sciences
Irvine, CA 92664