DOCUMENT RESUME

ED 114 496 CE 005 177

AUTHOR	Martin, Herbert
TITLE	Basic Drafting: A Competency-Based Guide for Students and Teachers.
INSTITUTION	Kentucky Univ., Lexington. Vocational Education Curriculum Development Center.
PUB DATE	[75]
NOTE	192p.
AVAILABLE FROM	Curriculum Development Center, University of Kentucky, Lexington, Kentucky 40506 ($5.00)
EDRS PRICE	MF-$0.76 HC-$9.51 Plus Postage
DESCRIPTORS	*Drafting; Individual Instruction; Learning Activities; Performance Based Education; *Post Secondary Education; *Programed Texts; *Secondary Education; *Teaching Guides; Vocational Education

ABSTRACT

The instructional guide for basic drafting is designed to aid in the organization and teaching of a first year course in drafting at either the secondary or postsecondary level. The body of the document consists of a student manual which is made up of seven blocks of instruction: introduction and orientation, geometric construction, multiview projection, dimensioning, sectioning, auxiliary projection, and pictorial views. Each block contains general objectives for the total block, directions for use of the block, a pretest, and lessons consisting of performance objectives and learning activities. The learning activities are made up of reference sources, informational outlines, performance operational steps, and criterion tests. A teacher manual, designed to complement the student manual, presents additional, supplementary material to aid in the implementation and effective use of the student manual (answers to test questions, reference sources, and comments). Completion of the manual should give the student the background that is necessary for successful achievement in the advanced drafting phase. (Author/EC)

Basic Drafting

A Competency-Based Guide

For Students And Teachers

Prepared By Herbert Martin

CURRICULUM DEVELOPMENT CENTER
VOCATIONAL EDUCATION
UNIVERSITY OF KENTUCKY
LEXINGTON, KY. 40506

TABLE OF CONTENTS

ACKNOWLEDGEMENTS

Appreciation is extended to the following Curriculum Development Center personnel for their ideas, suggestions, advice and service which contributed generously to the development of this instructional guide:

Dr. Herbert Bruce, Director

Dr. Bruce Carpenter, Assistant Director

Mr. Raymond Gilmore, Staff Artist

Mrs. Pat Schrader, Editor

Mrs. Annette Emmons, Typist

Appreciation is also extended to the following educators whose participation in the developmental institute provided a content base for this instructional guide.

Mr. Eugene Cline, Drafting Instructor
Mayo State Vocational Technical School

Mr. William Dawkins, Drafting Instructor
Bowling Green State Vo-Tech School

Mr. Eugene Karr, Drafting Instructor
Bell County Area Vocational Education Center

Mr. Kenneth Noah, Coordinator, Co-op Education
Eastern Kentucky University

Mr. Ralph O'Brien, Teacher Educator
Northern Kentucky State College

Mr. Herman Owens, Drafting Instructor
Hazard State Vo-Tech School

Mr. John C. Thomas, Curriculum Specialist
University of Kentucky

Mr. Amon Yates, Drafting Instructor
Carter County Area Vocational Education Center

PREFACE

This instructional guide for Basic Drafting is designed to aid in the organization and teaching of a first year course in drafting. It consists of a student manual which is made up of seven blocks of instructions and a teacher manual which is designed to complement the student manual. Each block of the student manual contains general objectives for the total block, directions for use of the block, a pretest, and lessons consisting of performance objectives and learning activities. The learning activities are made up of reference sources, informational outlines, performance operational steps, and criterion tests. The instructor's manual is simply additional, supplementary material to aid in the implementation and effective use of the student manual.

It is assumed that when the student successfully completes this Basic Drafting Manual, he or she will then be ready for a short exploratory phase into all areas of drafting before specializing in advanced drafting. Completion of this manual should give the student the background that is necessary for successful achievement in the advanced drafting phase. Of course, not all of the information which is included in this guide is necessary for all advanced stages of drafting, and not every student will need to cover all the material presented here. It will be left for each instructor to take from the guide such information as will be beneficial to the student and to the teaching of the course.

The Basic Drafting course is of no particular length of time in class hours. It begins when the student enters and his needs are identified, and it ends when these needs are met.

BASIC DRAFTING TEACHER MANUAL

Prepared by
Herbert Martin, Curriculum Specialist
Curriculum Development Center
University of Kentucky
Lexington, Ky. 40506

Directions for Use of Student and Teacher Manuals

The teacher manual is designed to help the instructor in the implementation and use of the student manual for individualized programmed instruction. It contains answers to all pretest and criterion test questions plus any additional information necessary for the complete understanding and utilization of the student manual.

The student manual should be duplicated and issued to each student. This will permit the instructor to make specific assignments from the student manual, or to write in additional assignments as required. The pretests permit the instructor access to the knowledge of areas in which the student is deficient, and the interim tests determine whether learning has taken place and to what extent. The student manuals also free the instructor from the endless question, "What do you want me to do next?" Any special instructions are included in the teacher's manual and the individual instructors are encouraged to make additions, deletions, and/or modifications to the student manual as the need arises. If any part of a page needs to be deleted, this may be done by simply taping a piece of blank paper over the printing before the page is reproduced. The guide is designed to be an aid for your program. Alter or revise it as you see fit.

For the benefit of establishing a uniform rating system for students, it is suggested that each student be permitted two (2) free questions per drawing on the skills criterion test and be docked .5 point on a ten-point scale for each question thereafter. No technical questions should be permitted on the pretest. It is suggested that a system for indicating such demerits be designed into the standard title block for each drawing.

Each block of the student manual contains a pretest for the total block and learning activities for the lessons that go to make up the block. The learning activities consist of reference resource listings, content outlines, and criterion tests which may be written and/or applied.

From the results of the pretest, the instructor is advised to determine which portions of the total block need to be assigned. Since this is a branching, individualized course of study, all of the materials included need not be covered by each student. Students should progress at their own rates of speed for learning.

The skills tests are taken directly from commercially prepared textbooks, and the selection of these specific textbooks resulted from a survey of the drafting instructors throughout the state. These were the books which instructors stated were most often used and were selected for the presentation quality of learning materials and for the usefulness and effectiveness of the assignment problems which they contained. This is not to say that any effort has been made to influence the selection of a textbook by any instructor. Provision has been made for each instructor to use the textbook which best serves his teaching needs, and all instructors are encouraged to do so.

Block 1 - Introduction and Orientation

Special Instructions and Test Key for Student Pretest

1. Some exposure to an historical background to drafting is necessary for a complete appreciation of the subject. It is likely that the instructor will make this exposure an on-going process with lectures and special student reports presented throughout the entire course of study. Therefore, the evaluation of this test question must be very subjective and left to the decision of the instructor.

2. Instructor should provide all of the actual equipment necessary for an evaluation of this test question. The questioning could be handled by an advanced student.

3. Select a drawing from textbook or working drawing file.

4. Notes and dimensions are included for the purpose of rating lettering technique. All angles, including the 90°, should be found by using the triangles.

5. If the students are not aware of the mathematics involved, another test requiring the use of the irregular curve may be substituted.

NOTE: Based upon evaluation of student pretest, determine if any competency deficiencies exist and make a tentative assignment for the total block. This may be revised at any time. If the student has demonstrated competency in all objectives listed for Block 1, assign pretest for Block 2.

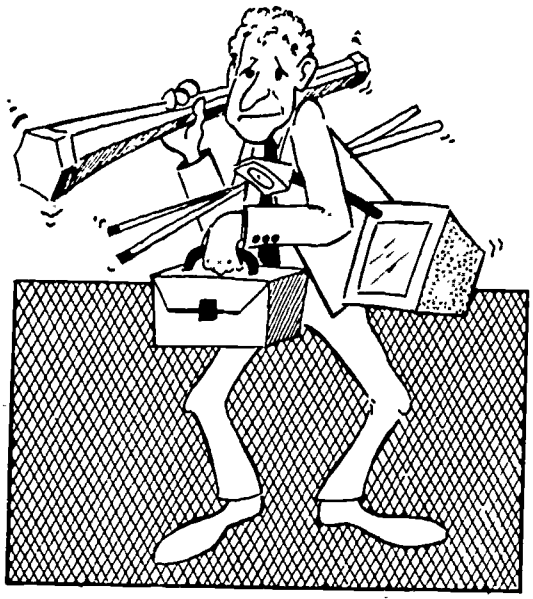

Lesson 1

Performance Objective: For Students — Given specific interaction topics relating to its historical importance, describe the development of drafting and relate it to present needs. This may be written or oral and complete to the satisfaction of the instructor.

NOTE: After the students have performed the learning activities for Lesson 1, evaluate the criterion test responses according to the following guidelines.

Criterion Test Key, Lesson One (1)

1. Drafting
2. As old as man
3. Organized the first drawing instrument manufacturing company in 1850 in Philadelphia
4. Object is placed above horizontal plane and in front of frontal plane. Used in most of the world except the U.S. and Canada. (See Technical Drawing, Giesecke, et al., Section 6.38)
5. Alberti, Brunelleschi, and others (Italian Architecture, 15th century)
6. Civil engineer
7. "A stone cut to shape." I Kings, 6:6
8. Artistic, technical
9. Assign historical review as needed.

Lesson 2

Performance Objective: For Students — Identify expendable drafting supplies and materials and describe their usage.

NOTE: (1) Students should be issued supplies at the start of this lesson.

(2) Parts of criterion test questions must be evaluated according to each instructor's standards. Therefore, no test key is provided.

(3) All other answers to the criterion test are provided in the content outline.

Lesson 3

Performance Objective: For Students — Given standard drafting equipment, prepare simple one-view drawings which will demonstrate the proper use and care of equipment and an awareness of the various line value.

NOTE: The instructor will be required to closely supervise beginning students during this lesson. All equipment should be issued and demonstrated. Advance students may be called upon to help with the instruction.

Criterion Test Key, Lesson Three (3)

1. Draw a line in normal position. Reverse T-square. Draw another line over original line. The two should match.

2. To illustrate lines on the object that would be visible in the view being drawn

3. 15°

4. To measure degrees of angles that are not 15° increments with the horizontal

5. Students may identify these from the equipment supply or from drawings.

6. A flexible curve is usually a rubber or plastic covered drawing device that may be shaped to fit a series of points that go to make up an irregular line. An irregular curve is a fixed template of irregular shape.

7. Instructor should provide the student with a line of known length.

8. Mechanical, Architects, Engineers, Decimal, Metric

9. Instructor evaluation

10. Instructor may add or delete job assignments as needed.

Criterion Test #2

1. (d) T-square

2. (c) Scale

3. (c) Triangle

4. (b) Protractor

5. (c) Construction lines

6. (b) Centerlines

7. (b) Thin and light

8. (a) Thin and black

9. (d) Medium and dark lines

10. (c) Wide, black lines

11. (d) Beam compass

12. (a) Drop spring bow compass

13. (c) French curve

14. (b) Mechanical Draftsman's scale

15. (c) Architect's scale

16. (a) Engineer's scale

17. (d) Decimal scale

18. (a) 1/8" long, thin and black

19. Skills Test

Lesson 4

Performance Objective: For Students — Complete lettering plates using vertical and inclined techniques with lettering that is legible, neat, uniform and spacially balanced.

NOTE: Since doing lettering plates can get to be very tedious and boring for students, it is suggested that they not be required to spend more than 8 or 9 consecutive hours of class time in this area. If additional plates need to be completed, they should be interpsersed among other assignments. Concentrating on good lettering techniques should be an on-going practice for the duration of the course.

Criterion Test Key, Lesson Four (4)

1. To maintain uniformity in height and direction of slant in lettering

2. Uniform backgrounds between letters. Letter "o" between words

3. 4H to 9H

4. Gothic

5. Ampersand

6. 67 1/2°

7. Legible, neat, uniform, and spacially balanced

8. Sheet should be a well composed sheet with good use of margins and lettering arrangement. If student work meets the above standards at either check point, assign pretest for next complete block.

"I SEE LEARNING ... I SEE ... I..."

Block 2 - Geometric Construction

Special Instructions and Test Key for Student Pretest

1. When it touches at only one point

2. A straight line can be drawn through the point of tangency and both radius centers.

3. A line drawn from the radius center to the point of tangency forms a 90° angle with the given line.

4. Bisect - divide into two equal parts
   Pentagon - a regular polygon of five sides
   Polygon - a closed plane figure bounded by straight lines
   Obtuse - an angle greater than 90°
   Hexagon - a regular polygon of six sides
   Ellipse - a conic section produced by an oblique plane intersecting a right circular cone above the base

5. These are test drawings and should measure up to your highest grading standard.

   NOTE: Based upon evaluation of student pretest, determine if any competency deficiencies exist and make a tentative assignment for the total block. This may be revised at any time. If the student has demonstrated competency in all objectives listed for Block 2, assign pretest for Block 3.

Lesson 1

Performance Objective: For Students — Given specific lines, angles, and arcs, bisect into equal lengths by using only a compass, a straight edge, and a pencil.

NOTE: Render assistance through all practice steps as required. After the students have performed the learning activities for Lesson 1, evaluate the criterion test responses according to the following guidelines.

Criterion Test Key, Lesson One (1)

1. Large sheet metal patterns, airplane layout
2. Divide into two equal parts.
3. The distance from the center to the periphery of a circle or an arc. One half the diameter. 2 π times the radius equals the circumference.
4. An angle is formed by the intersection of two straight lines.
5. 90° or forming right angles
6. The end opposite the base of a triangle

Lesson 2

Performance Objective: For Students — Given a line of any length (known or unknown), divide it into any given number of equal lengths by using only two triangles and a pair of dividers, or divide it into any given proportional lengths by using a scale and two triangles.

Criterion Test Key, Lesson Two (2)

1. Lines that never converge but remain a constant distance apart at corresponding points.
2. Laying out stair risers, spacing threads, spacing mortar joints, laying out grids.

Lesson 3

Performance Objective: For Students — Given the lengths of all three sides, construct a triangle by using only a straight edge and a triangle.

Criterion Test, Lesson Three (3)

1. Equilateral - all sides and angles equal
   Isosceles - two sides and two angles equal
   Scalene - no sides or angles equal
   Right - containing an angle of 90°

2. 180°.

Lesson 4

Performance Objective: For Students — Given the lengths of all three sides of a triangle, divide the triangle (or trapezoid) into a given number of equal axes. Utilize the methods of construction presented in previous lessons.

NOTE: The lesson is designed so that the students may apply the skills learned in the three previous lessons. The student should be able to perform the criterion test without referring to the outlined learning activities.

Lesson 5

Performance Objective: For Students — Given necessary specifications, construct regular polygons by using the geometrical methods.

NOTE: These are all skills tests with the exception of question #2 which is covered in the content outline.

Lesson 6

Performance Objective: For Students — Given regular lines, construct tangent arcs by using geometrical methods.

Lesson 7

Performance Objective: For Students — Given the major and minor axes, draw an ellipse by using five different methods of construction.

Lesson 8

Performance Objective: For Students — Given the rise and span or the focus and directrix, draw a parabola by methods of geometrical construction.

NOTE: The skills tests for lessons 6, 7, & 8 are found at the end of Block 2. These should be evaluated according to the instructor's drafting standards. If a written test is required, refer to the pretest, questions one through four.

Block 3 - Multiview Projection

Special Instructions and Test Key for Student Pretest

1. Inclined
2. Normal
3. Oblique or inclined
4. Normal
5. Normal
6. Oblique
7. Inclined
8. Inclined
9. Oblique
10. Normal
11. Performance Skills

NOTE: Based upon evaluation of student pretest, determine if any competency deficiencies exist and make a tentative assignment for the total block. This may be revised at any time. If the student has demonstrated competency in all objectives listed for Block 3, assign pretest for Block 4.

Lesson 1

Performance Objective: For Students Given specific interaction topics relating to orthographic projections, describe the concept and relate it to present needs and practices.

NOTE: The use of block models is very helpful in illustrating the concepts that are covered in this block. A plexiglass box with hinged edges is also very helpful for showing how views are revolved into the picture plane.

Criterion Test Key, Lesson One (1)

1. Plane of projection - the surface which receives the orthographic image of the object
   Oblique - neither perpendicular nor parallel to any of the principle planes of projection
   Projectors - lines corresponding to all points on the object which are projected perpendicularly onto the planes of projection thereby producing an image
   Profile plane - the projection plane which receives the side views of the object

2. Front, rear

3. It is either inclined or oblique to the picture plane.

4. So that the lines of sight may be parallel projectors

5. It is more inclined toward the picture plane.

6. Point

7. The view in which it is parallel to the picture plane

8. NOTE: Students should provide their own numbering system for this problem.

Lesson 2

Performance Objective: For Students Given necessary specifications for objects, construct orthographic projections according to the methods outlined.

NOTE: For the performance test problems, the instructor should designate that at least one problem be projected by the three major methods as described in the outline. The methods used in the remaining problems are optional.

Block 4 - Dimensioning

Special Instructions and Test Key for Student Pretest

1. In aligned dimensioning, all dimensions are placed parallel to the dimension lines. In unidirectional dimensioning, all dimensions are placed parallel to the bottom of the page.

2. 1/16"

3. 1/8"

4. Whenever the space between extension lines is insufficient for the placement of the dimensions

5. It points toward the radius center of the circle.

6. A center line

7. In the lower right-hand corner of the drawing

8. Evaluate dimensioning technique of drafting performance.

NOTE: Based upon evaluation of student pretest, determine if any competency deficiencies exist and make a tentative assignment for the total block. This may be revised at any time. If the student has demonstrated competency in all objectives listed for Block 4, assign pretest for Block 5.

An amount of personal judgment is involved in the dimensioning process; however, there are correct and incorrect techniques. It is suggested that this block should simply illustrate a student's understanding and mastery of these techniques. The block should not be used as a means of testing a student's understanding of complex shapes. This has been done to some extent in multiview projections, and will be covered more extensively in the working drawings assigned in advanced drafting.

Lesson 1

Performance Objective: For Students — Given specific interaction topics relating to dimensioning techniques, describe the concepts and relate them to present needs and practices.

Criterion Test Key, Lesson One (1)

1. 1/16". It is included in order to avoid confusion as to the actual boundaries of the object, to differentiate between the object lines and the extension lines.

2. Whenever the space between extension lines is insufficient for the placement of the dimensions

3. Parallel to the dimension lines

4. An arc is a portion of a circle and is dimensioned from the radius. Circles are usually dimensional by diameter.

5. An established or known control line which is used as a reference point in establishing other dimensions

6. In the rectangular view

7. A control surface symbol is more precise.

8. The edge view

Lesson 2

Performance Objective: For Students — Given the specifications for a simple object, draw as many views as needed to completely describe the object and dimension completely.

NOTE: These are skills tests in which the primary grading emphasis should be on the dimensioning techniques.

Block 5 - Sectioning

Special Instructions and Test Key for Student Pretest

1. For clarity in visualizing interior details

2. Cutting-plane

3. Crosshatched

4. By arrowheads

5. Students should freehand these on the test sheet.

6. A section which is revolved 90° about a center line and into the plane of projection on which the section has been taken.

7. One which is removed from the normal projected position

NOTE: It is not expected that these assigned drawings will demonstrate a competency in all types of sectioning. It is hoped that they will demonstrate an understanding of the principles of sectioning. If the instructor feels that further demonstration of the remaining types is necessary, he might require this as a freehand exercise by using models or other drawings from textbooks.

Based upon evaluation of student pretest, determine if any competency deficiencies exist and make a tentative assignment for the total block. This may be revised at any time. If the student has demonstrated competency in all objectives listed for Block 5, assign pretest for Block 6.

Lesson 1

Performance Objective: For Students — Given specific interaction topics relating to sectioning techniques, describe the concepts and relate them to present needs and practices.

Criterion Test Key, Lesson One (1)

1. To show interior detailing that would not otherwise be shown in the normal views of objects

2. In using alternate section lining, and sometimes hidden details which are not included in sectioned portion of the object

3. To indicate the areas which theoretically have been in actual contact with the cutting plane

4. (c) Cutting plane line

5. 1/4

6. It shows the interior and exterior detailing of symmetrical objects in the same view

7. Revolved sections and broken-out sections

8. 90°

9. 90°

10. When, for clarity, it is necessary to show certain angled features in section

11. False

Lesson 2

Performance Objective: For Students — Given the specifications for a simple object, completely describe the object graphically, section wherever needed, and dimension completely.

NOTE: These are skills tests in which the primary grading emphasis should be on the sectioning techniques.

Block 6 - Auxiliary Projection

Special Instructions and Test Key for Student Pretest

1. Perpendicular

2. An infinite number

3. Front view

4. Right side view

5. Top view

6. Intersecting planes

7. (c) Get a point view of any line in the plane.

8. (a) Get a point view of the line of intersection of the planes.

9. Partial

10. Secondary auxiliary view

11. Primary, secondary

12. Skills test

NOTE: Sometimes the use of wooden models is helpful in explaining the theories of auxiliary projection. Drawings of these models may be assigned as skills tests.

Lesson 1

Performance Objectives: For Students

Given specific interaction topics relating to the projection of primary auxiliary views, describe the concepts and relate them to the needs of object description.

Given specifications for simple or complex objects containing inclined surfaces, prepare primary auxiliary drawing according to the directions indicated.

Criterion Test Key, Lesson One (1)

1. To show the true shape of surfaces not normal to the orthographic planes

2. Height, depth, width

3. a. The true length of a line
   b. A given line as a point
   c. A given plane as an edge
   d. The true shape of a plane

4. Infinitely many

5. The true shape of inclined or oblique planes

6. By drawing only one-half of the object

7. A partial auxiliary view shows only the true shape plane. It is used when an auxiliary view is required in order to complete the principal views.

8. Skills tests

Lesson 2

Performance Objectives: For Students

Given specific interaction topics relating to the projections of secondary and successive auxiliary views, describe the concepts and relate them to the needs of object description.

Given specifications for simple or complex objects containing oblique surfaces, prepare drawings with secondary auxiliary views according to the instructor's standards.

Criterion Test Key, Lesson Two (2)

1. Oblique planes

2. Inclined planes

3. True length

4. By projecting the primary auxiliary view in a direction parallel with the true length line

5. Two views

6. Skills tests

Block 7 - Pictorial Views

Special Instructions and Test Key for Student Pretest

Since the block on Pictorial Drawing covers such a vast amount of related but dissimilar material, it will be divided into six sub-units, oblique, isometric, dimetric, trimetric, one-point perspective, and two-point perspective. Each unit will have its own pre-test and criterion test. Each unit functions independently with the exception of the units on dimetric and trimetric which are reliant upon information learned in the unit on isometric.

It is possible that the instructor will not wish to cover all of the material included in this block. It should be omitted at his discretion. Some of the information presented here will possibly also be reviewed and covered more in depth in advanced drafting.

Based upon evaluation of all student pretests as they occur in the student manual, determine if any competency deficiencies exist and make tentative assignments for that section. These assignments may be revised at any time. It the student demonstrates competencies in all of the objectives as listed throughout Block 7, it is suggested that the student be encouraged to briefly review all of the information as presented in the entire manual of Basic Drafting.

This is the final block of the Basic Drafting guide. Assign the pretest for Introduction to Architectural Drafting as the next assignment.

Lesson 1

Performance Objective: For Students — When shown illustrations of various means of creating three dimensional affect pictorially, identify the types and define the characteristics and differences of each with complete accuracy.

NOTE: This is an introductory lesson for the entire block.

Criterion Test Key, Lesson One (1)

1. a. Position of the object relative to the picture plane
   b. Distance and position of the viewer

2. The degree to which the drawing of the object differs from what would noramlly be seen by the human eye. Oblique drawing.

3. Dimetric Pictorial. (This may be open to debate as some may feel that trimetric pictorial or three-point perspective are little used. With the shift toward pictorial drawings being used as working drawings, it is probable that the method of intersections will be used more extensively. This will automatically cause the trimetric to be used more often that dimetric. Many draftsmen-illustrators quite often will "fake" a third vanishing point in doing renderings of objects for promotional purposes. This creates a more realistic appearance.)

4. Oblique pictorial

Unit on Oblique Drawing

Pretest

This is a skills demonstration test that is designed to evaluate the student's ability to produce an oblique drawing.

Lesson 2

Performance Objective: For Students — Given the necessary specifications for simple objects containing any of the following: an angle on a receding or non-oblique plane; circle and arcs on a receding plane; irregular shapes, prepare a finished oblique drawing to the established standards.

Criterion Test Key, Lesson Two (2)

1. The picture planes in both orthographic and oblique drawing are parallel to the characteristic surface of the object.

2. The receding axis in cavalier oblique is drawn to full scale. In cabinet oblique, the receding axis is drawn to half scale.

3. These shapes may be drawn with a compass rather than having to plot points or construct ellipses.

4. The four-center method is only an approximate ellipse. The offset method actually plots the shape.

5. a. Offset method

6. False

7. True

8. True

Lesson 3

Performance Objectives: For Students

Describe the techniques of oblique sectioning needed to show the interior detailing of an object.

Correlate the technique of oblique dimensioning with general dimensioning practices and describe any special rules which apply to the satisfaction of the instructor.

When given the specifications for a complex object, prepare an oblique drawing to established standards. Section and dimension where required.

NOTE: These are skills tests and test the total content covered in Oblique Pictorial.

Unit on Axonometric Drawing

Pretest

Skills demonstration test.

Lesson 4

Performance Objectives: For Students

Describe, compare, and contrast isometric projection and isometric drawing.

Given specifications for simple or complex objects involving circle, arc or irregular shapes on isometric or non-isometric planes, prepare drawings according to the following methods: auxiliary projection, revolution and tilt, isometric drawing.

Criterion Test Key, Lesson Four (4)

1. They are projected from an orientation which is oblique to the picture plane.

2. The projected foreshortening is equal to $\sqrt{2/3}$ times the full scale.

3. An isometric projection is closer to the size the object would appear. An isometric drawing is simpler in that everything may be measured with a full size scale.

4. 45°, 35° - 16'

5. Full

6. Measurements may only be taken along the isometric axes.

7. By scaling the vertical and horizontal dimensions in orthographic and transferring these to the corresponding location on the isometric axes.

Lesson 5

Performance Objectives: For Students

Describe the techniques of isometric sectioning necessary to show interior detailing of an object.

Correlate the techniques of isometric dimensioning with general dimensioning and oblique dimensioning practices, and describe any special rules which apply.

When given the specifications for a complex object, prepare an isometric drawing to established standards. Section and dimension where required.

Criterion Test Key, Lesson Five (5)

1. 60° with horizontal

2. The letters are supposed to appear as if they were on the isometric plane where the dimension is taken.

3. It is necessary because of the nature of the drawing.

4. Vertically and at 30° with the horizontal in the standard configuration. Otherwise, parallel to the isometric axes.

5. Skills tests

Lesson 6

Performance Objectives: For Students

Describe dimetric pictorial drawing and give specific characteristics to the satisfaction of the instructor.

Given the specifications for a complex object, prepare a dimetric pictorial drawing to the established standards.

NOTE: In basic drafting, it is probably necessary for the student to be aware of the dimetric projection concept. If it becomes necessary to exclude any lessons from the student's program, it is suggested that dimetric projection is not as indispensable as some of the others.

Criterion Test Key, Lesson Six (6)

1. Performance skills.

Lesson 7

Performance Objectives: For Students

Describe trimetric projection and its method of construction to the satisfaction of the instructor.

Given the specifications for a simple object, prepare a trimetric pictorial by the method of intersections to the established standards.

Criterion Test Key, Lesson Seven (7)

1. Performance skills.

Unit on Perspective

Pretest

This is a performance test. If, for the purpose of grading, you have already prepared a drawing that will serve as an overlay to check for accuracy, the students should be informed of the specific conditions. The positioning of the object and the locations of the picture plane and station point should be issued to the students before the plates are begun.

Lesson 8

Performance Objectives: For Students

Describe perspective and give specific characteristics of each type of perspective to the satisfaction of the instructor.

Given the specifications for an object, prepare one-point and two-point perspectives by use of the plan method to the established standards.

Criterion Test Key, Lesson Eight (8)

1. a. Station Point - the position of the observer
   b. Vanishing Point - the point toward which the diminishing lines on the receding axis seem to converge
   c. Picture Plane - the plane upon which the observer's lines of sight are projected
   d. PPL - piercing point left
   e. PPR - piercing point right
   f. Horizon - a horizontal line drawn through the vertical height point of observation
   g. Ground line - the intersection of the ground plane and the picture plane

2. Assume the horizon to be at eye level and measure vertically along a line that is projected from the intersection of the picture plane with the object in the plan view.

3. Along a true height measure line

4. By projecting a point on the object in the plan view until it pierces the picture plane and then projecting vertically into the perspective

5. The perspective gets larger and flatter.

6. It may foreshorten either side of the object according to the direction of rotation.

7. The viewer will see more of the side of the object which is to his left.

8. 30° peripheral vision about a line of sight which is perpendicular to the picture plane

9. Skills tests

REFERENCE BOOKS

American Technical Society 848 East 58th Street Chicago, IL 60637	Basic Drafting, Giachino and Beukema, 1965
	Drafting and Graphics, Giachino and Beukema, 1968
	Drafting Technology, Giachino and Beukema, 1964
	Engineering Drafting Problems, Giachino and Beukema
	Engineering - Technical Drafting and Graphics, Giachino and Beukema, 1966
Bruce Publishing Co.	Mechanical Drawing 1, Berg, 1966
California State Dept. of Education Sacramento, CA	Mechanical Drawing 2, Berg, 1966
Charles Bennett Co. 809 W. Detweiller Drive Peoria, IL 61614	Drafting Technology and Practice, Spence, 1973
Doubleday & Company, Inc. 1371 Reynolds Avenue Santa Ana, CA 92705	Drafting Made Simple, Segel
Goodheart-Willcox Inc. 123 W. Taft Drive South Holland, IL 60473	Exploring Drafting - Basic Fundamentals, Walker, 1972
Howard Sams Co. Technical Publications Division 4300 W. 62nd Street Indianapolis, IN 46206	Drafting Technology Problems, Gerevas
Industrial Press Editorial & Sales Office 200 Madison Avenue New York, NY 10016	Elements of Mechanical Drafting, Yaslow, 1969
Macmillan Company Inc. 866 Third Avenue New York, NY 10017	Basic Technical Drawing, Spencer & Dygdon, 2nd ed., 1968
	Engineering Drawing, Spencer, 1956
	Technical Drawing, Giesecke, Mitchell & Spencer, 1967

McGraw-Hill/Gregg, Inc. Gregg Trade & Industrial Education 1221 Avenue of the Americas New York, NY 10022	Elements of Lettering, Benson and Carey Engineering & Architectural Lettering, Grant Engineering Drawing, French & Vierck Engineering Drawing, Zozzora, 1958 Engineering Drawing & Design, Jensen, 1968 Engineering Drawing with Creative Design, Grant Manual of Engineering Drawing for Students and Draftsmen, French & Vierck, 10th ed., 1966 Mechanical Drawing, French & Svensen Problems in Mechanical Drawing, Levens & Edstram
McKnight & McKnight McKnight Publishing Co. Bloomington, IL 61701	Drafting Technical Communication, Wright World of Drafting
Prakken Publications, Inc. Ann Arbor, MI	Drafting: Basic Techniques, Mossman & Baker
Prentice-Hall, Inc. Englewood Cliffs, NJ 07632	Basic Graphics, Luzadder, 1968 Mechanical Drafting Essentials, McCabe, Keith & Farnham Technical Drafting Essentials, Luzadder, 1956

FILMS

ACI Films, Inc. 35 W. 45th Street New York, NY 10036	ELEMENTARY MECHANICAL DRAWING SERIES "Mechanical Drawing Instruments" "Oblique Drawings - Fundamentals" "Isometric Drawings - Fundamentals" "Orthographic Drawing - Fundamentals"
Aims Instructional Media Service, Inc. P.O. Box 1010 Hollywood, CA 90028	"Essentials of Drafting"
Bailey Film Associates 11559 Santa Monica Blvd. Los Angeles, CA 10025	"Geometry: Lines & Shapes"
Doubleday Multimedia Materials 1371 Reynolds Avenue Santa Ana, CA 92705	ESSENTIALS OF DRAFTING "Part A - Introduction" "Part B - Square & Triangle" "Part C - Dividers & Compass" "Lettering" "Sections" "Shape Description" "Size Description"
Encyclopedia Britannica Films 435 North Michigan Chicago, IL 60611	"Families of Lines & Circles"
McGraw-Hill Films 330 W. 42nd Street New York, NY 10036	"Auxiliary Projection" "Full Sections & Half Sections" "Isometric Drawings" MECHANICAL DRAWING "Auxiliary Parts - Part I" "Auxiliary Parts - Part II" "Language of Drawing" "Sections" "Shape Description - Part I" "Shape Description - Part II" "Oblique Drawing" "Offset and Broken-out Sections" "Projecting Views in Orthographic Multiview" "Revolved Sections & Removed Sections"

McGraw-Hill Films (Cont'd)	"Sketching Circles & Arcs" "Sketching Straight Lines" "Spacing Views in Orthographic Multi-view" "T-Square and Triangles" "Understanding Orthographic Multi-view Projection"
McIntyre Education Media Ltd. 86 St. Regis Cresent North Downsview, Ontario, Canada	"Architects Scale" "Drawing Board and T-Square" "Drawing with Pencils" "Ellipse" "Guidelines & Spacing" "Pencils & Leads" "Sharpening Pencils & Leads" "Using Adjustable Triangles" "Using Engineers Scale" "Using Triangles"
Michigan State University Instructional Media Center East Lansing, MI 48823	"According to Plan - Introduction to Engineering Drawing" "Auxiliary Views - Double Auxiliaries" "Auxiliary Views - Part I" "Auxiliary Views - Part II" "Auxiliary Views - Single Auxiliary" "Concepts & Principles of Functional Drafting" "Draftsman" "Drawing & the Shop" "Language of Drawing" "Orthographic Projection" "Perspective Drawing" "Pictorial Drawing" "Principles of Scale Drawings" "Sections" "Sections & Conventions" "Selection of Dimensions" "Shape Description - Part I" "Shape Description - Part II" "Visualizing an Object"
National Audio Visual Center National Archives & Records Service Washington, D.C. 20409	"Jobs in Drafting - 1969"
Pace Educational Media Pace International Corp. 1107 E. Chapman Ave. Orange, CA 92666	MECHANICAL DRAWING SERIES I AND II Series I "Hidden Details" "Positioning & Dimensioning Features" "Projection of Views" "Symbols & Tolerances"

Pace Educational Media (Cont'd)	Series II "Meaningful Dimensioning" "Projection of Views"
Sterling Educational Films 241 E. 34th Street New York, NY 10016	DRAFTING SERIES "Curves" "Curves, Lettering" "Curves, Lettering: Sketching an Arc" "Curves, Lettering: Sketching a Circle" "Drawing and Planning for Metalwork" "Drawing and Planning for Woodwork" "Drawing Lettering" "Methods: Isometric Drawings" "Methods: T-Square & Triangle"
Thorne Films Inc. 1229 University Avenue Boulder, CO 80302	MECHANICAL DRAWING SERIES "Basic Mechanical Drawing Techniques" "Breaks (Long Cylindrical)" "Countersink & Counterbore" "Drawing a Hexagon" "Drawing an Oblique Cylinder" "Drawing an Oblique Rectangle" "The Bow Compass" "The Protractor"
University of Illinois Visual Aids Service Division of University Extension	"Auxiliary Views - Double Auxiliaries" "Auxiliary Views - Part I" "Auxiliary Views - Part II" "Auxiliary Views - Single Auxiliaries" "Drafting Methods" "Drafting Tips" "Introduction to Engineering Drawing" "Language of Drawing" "Orthographic Projection" "Pictorial Sketching" "Sections" "Sections & Conventions" "Selection of Dimensions" "Shape Description - Part I" "Shape Description - Part II" "The Draftsmen" "Three Dimension Drafting" "Visualizing an Object"
University of Iowa Audio Visual Center Iowa City, IA 52240	"Auxiliary Views - Double Auxiliaries" "Auxiliary Views - Single Auxiliaries" "Drafting: Occupations & Opportunities" "The Draftsman" "Orthographic Projection" "Pictorial Sketching"

University of Minnesota
Dept. of A-V Extension
General Extension Division
2037 University Ave. S.E.
Minneapolis, MN 55455

"Auxiliary Views - Part I"
"Auxiliary Views - Part II"
"Auxiliary Views - Single Auxiliaries"
"Concept & Principles of Functional Drawing"
"Language of Drawing"
"Principles of Scale"
"Shop Procedures"
"Size Description"

University of Missouri
Center for Educational Improvement
College of Education
Columbia, MO 65201

"Engineering Drawing Series"
"Technical Drawing"

TRANSPARENCIES

DCA EDUCATIONAL PRODUCTS

4865 Stenton Avenue
Philadelphia, Pa. 19144

Orthographic Projection & View Selection
Orthographic Projection: View Arrangement
Drafting Techniques: Planning and Laying Out the Drawing
Drafting Techniques: Finishing the Drawing
Conventional Representation: Violation of the Principles of True Projection
Point Projection
Primary Auxiliary Views
Auxiliary Projection: Auxiliary Views of Non-Symmetrical Surfaces
Auxiliary Projection: Symmetrical Surfaces, Cylinders and Irregular Shapes
Auxiliary Projection Completion of Principal Views from the Auxiliary View
Secondary Auxiliary Projection
Secondary Auxiliary Views
Revolution-Rotation of Objects
Sectioning: The Full Section: Conventions
Full Section Views
Half Sections
Sections: Revolved: Removed: Auxiliary
Dimensioning: General Rules, Part I
Dimensioning: General Rules, Part II
Dimensioning: General Rules, Part III
Dimensioning: General Rules, Part IV
Precision Dimensioning: Terms and Definitions
Precision Dimensioning: Standard Limits, Types and Classes of Fits
Precision Dimensioning: Application of Standard Limits
Machine Design Features and Production Methods
Surface Quality Control

MECHANICAL DRAFTING
Group I Geometric Construction
Geometric Construction
Geometric Construction (Lines)

DCA (Cont'd)

Group II Orthographic Projection
- Single View Orthographic (Template)
- Single View Orthographic (Pump Gasket)
- Single View Orthographic (Crank Arm)
- Single View Orthographic (Gasket)
- Dimensions (Gauge)
- Two View Orthographic (Plane Iron)
- Two View Orthographic (Roller Support)
- Two View Orthographic (Needle Valve)
- Three View Orthographic (Drill Block)
- Three View Orthographic (Machinist Clamp)
- Arcs and Curves
- Developing the End View (Bending Jig)
- Methods of Projections (Block Support)
- Three View Orthographic (Adjustable Bearing Block)
- Working Drawing (Special Wrench)

Group III Working Drawing/Lost Edges-Machine Operations
- Working Drawing (Main Bearing)
- Lost Edges
- Lost Edges (Crank Arm)
- Machine Operations I
- Machine Operations II
- Machine Operations III
- Methods of Projection (Machine Operations)
- Working Drawing (Control Index)

Group IV Scale Drawing
- Scale Drawing I
- Scale Drawing II

Group V Types of Pictorial Drawing
- Types of Pictorial Drawing
- Obliques Drawing I
- Pictorial Drawing (Cavalier)
- Oblique Cylinders
- Cabinet Drawing I
- Oblique Drawing II
- Cabinet Drawing II
- Cabinet Drawing III
- Cabinet Drawing (Cylinders and Arcs)

Group VI Isometric Drawing
- Isometric Drawing
- Principles of Isometric Drawing

DCA (Cont'd)

Isometrics (Wood Joints)
Non-Isometrics
Isometric and Non-Isometric Lines
Parallel Curves in Isometric
Non-Isometric Curved Lines
Developing an Isometric Circle
Isometric Circles
Locating Isometric Circles at a Given Point
Isometric Arcs and Tangents
Isometric Arcs (Detent Arm)
Isometric Drawing (Cylinders and Arcs)
Isometric Arcs (Sheet Metal Bracket)
Constructing Isometric Cylinders
Isometric Cylinders
Isometric Circles and Arcs (Hanger)
Application of Isometric Cylinders
Arcs-Non-Isometric Shapes (Pulley Blocks)
Constructing a Non-Isometric Slot

Group VII Section Drawing
Introduction to Sectioning
The Cutting Plane
Three Applications of Full Section
Section Drawing (Full Section)
Section Drawing (Half Section)
Offset Section
Revolved Section
Removed Section (Hammer Handle)
Broken Out Section
Other Types of Sections
Assembly Sectioning
Pictorial Section Drawings

EYE GATE HOUSE

146-01 Archer Avenue
Jamaica, NY 11435

MECHANICAL DRAFTING
Geometric Construction (Circles)
Geometric Construction (Lines)
Single View Orthographic (Template)
Single View Orthographic (Pump Gasket)
Single View Orthographic (Crank Arm)
Single View Orthographic (Gasket)
Dimensions (Gauge)
Two View Orthographic (Plane Iron)
Two View Orthographic (Roller Support)
Two View Orthographic (Needle Valve)
Three View Orthographic (Drill Block)
Three View Orthographic (Machinist Clamp)

EYE GATE HOUSE (Cont'd)

Arcs and Curves
Developing the End View (Bending Jig)
Three View Orthographic (Adjustable Bearing Block)
Methods of Projections (Block Support)
Three View Orthographic (Shaft Base)
Working Drawing (Special Wrench)
Working Drawing (Main Bearing)
Lost Edges
Lost Edges (Crank Arm)
Machine Operations I
Machine Operations II
Machine Operations III
Method of Projection (Machine Operations)
Working Drawing (Control Index)
Scale Drawing I
Scale Drawing II
Types of Pictorial Drawing
Oblique Drawing I
Pictorial Drawing (Cavalier)
Oblique Cylinders
Cabinet Drawing I
Oblique Drawing II
Cabinet Drawing II
Cabinet Drawing III
Cabinet Drawing (Cylinders and Arcs)
Cabinet Drawing (Swing Block)
Isometric Drawing
Principles of Isometric Drawing
Isometrics (Wood Joints)
Non-Isometrics
Isometric and Non-Isometric Lines
Parallel Curves in Isometric
Non-Isometric Curved Lines
Developing an Isometric Circle
Isometric Circles
Locating Isometric Circles at a Given Point
Isometric Arcs and Tangents
Isometric Arcs (Detent Arm)
Isometric Drawing (Cylinders and Arcs)
Isometric Arcs (Sheet Metal Bracket)
Constructing Isometric Cylinders
Isometric Cylinders
Isometric Circles and Arcs (Hanger)
Application of Isometric Cylinders
Arcs-Non-Isometric Shapes (Pulley Blocks)
Constructing a Non-Isometric Slot
Introduction to Sectioning
The Cutting Plane

EYE GATE HOUSE (Cont'd)

Three Applications of Full Section
Section Drawing (Full Section)
Section Drawing (Half Section)
Offset Section
Revolved Section
Removed Section (Hammer Handle)
Broken Out Section
Other Types of Sections
Assembly Sectioning
Pictorial Section Drawings

BASIC DRAFTING STUDENT MANUAL

Prepared by
Herbert Martin, Curriculum Specialist
Curriculum Development Center
University of Kentucky
Lexington, Kentucky 40506

Directions for Use of Manual

This manual is designed to provide the student with an individualized, competency based, programmed course of instruction. What this means to you, the student, is that upon entry into the course your instructor will:

1. Interview you to determine if you have had any previous exposure to drafting,

2. Administer the pretests provided in the student manual to determine which skills you already possess and where your deficiencies are,

3. Issue instructions and assignments from the student manual which the instructor believes will best fit your learning needs,

4. Evaluate criterion tests to ascertain that you have met the standards as required by the course.

You are permitted to proceed at your own rate of speed in completing the course.

The following sheet is a table of contents, a progress chart, and a student evaluation record. It is suggested that you keep this in fairly good condition because you may take it with you if you should transfer to another school, and it will provide a record of your achievements. It could also be very useful on a job interview.

NAME _____

CLASSIFICATION _____

SCHOOL _____

INSTRUCTOR _____

BLOCK	PAGE	LESSON	DATE	AVERAGE RATING	INSTRUCTOR'S REMARKS
1		Pretest - Introduction & Orientation			
		1. Historical Significance of Drafting			
		2. Materials and Supplies			
		3. Drafting Equipment			
		4. Lettering			
2		Pretest - Geometric Construction			
		1. Bisect Lines, Arcs, and Angles			
		2. Divide Lines into Proportional Parts			
		3. Triangles			
		4. Divide a Triangle into Equal Areas			
		5. Regular Polygons			
		6. Tangent Arcs			
		7. Ellipse			
		8. Parabola			
3		Pretest - Multiview Projection			
		1. Concepts & Techniques			
		2. Applications			
4		Pretest - Dimensioning			
		1. Concepts & Techniques			
		2. Applications			
5		Pretest - Sectioning			
		1. Concepts & Techniques			
		2. Applications			
6		Pretest - Auxiliary Projections			
		1. Primary Auxiliary Views			
		2. Secondary Auxiliary Views			
7		1. Introduction to Pictorial Drawing			
		Pretest - Oblique Drawing			
		2. Oblique Concepts & Techniques			
		3. Dimensioning, Sectioning & Application			
		Pretest - Axonometric Drawing			
		4. Isometric Concepts & Techniques			
		5. Dimensioning, Sectioning & Application			
		6. Dimetric Concepts & Application			
		7. Trimetric Concepts & Application			
		Pretest - Perspective			
		8. Definitions, Concepts & Applications			

BLOCK 1 INTRODUCTION AND ORIENTATION

BASIC DRAFTING STUDENT MANUAL

GENERAL OBJECTIVES FOR BLOCK I

1. Describe the development of drafting.

2. Identify the tools, materials, and equipment used in drafting and demonstrate the proper use by performing the following competencies:

   --Measure and read line lengths using drafting scale
   --Construct vertical, horizontal, angular and parallel lines using straight-edge and triangles
   --Draw circles and arcs with a compass
   --Measure angles with a protractor
   --Use proper lead weight to produce line weight desired
   --Draw irregular curves

3. Given exercises requiring the use of vertical and inclined lettering techniques, complete a clean, neat, and precise presentation to the satisfaction of the instructor.

4. Identify and describe the use of the various lines commonly used in drafting.

Directions for Use of Block 1 of the Basic Drafting Student Manual

This manual is designed for student use in individualized programmed instruction. It will permit you to advance through the course at as rapid a rate of progress as possible. The manual includes learning materials and specific assignments which you are to perform to the satisfaction of the instructor.

On this sheet, you will find a competency pretest. If you have had previous exposure to any of the information outlined in the general objectives on the cover page for this block, perform the pretests and submit the solutions to your instructor. If you have had no exposure to this phase of drafting, proceed to the section marked "Lesson 1" and work through the outlined learning activities.

Pretest for Block 1

1. Write a report on the development of drafting from the early beginnings to the present.

2. Identify orally all of the drafting equipment that is available for your use and describe how it is to be used.

3. When shown samples of finished working drawings, identify orally the various lines and describe how they are used. These should be obtained from the instructor.

4. Copy Figure 2-92, Technical Drawing, Giesecke. Include all dimensions and notes. (Instructor may substitute another problem.)

5. Plot the curve $X=4Y^2$ on a Cartesian coordinate system.

SEE INSTRUCTOR FOR NEXT ASSIGNMENT.

Lesson 1: Historical Significance of Drafting

Performance Objective: Given specific interaction topics relating to its historical importance, describe the development of drafting and relate it to present needs. This may be written or oral and complete to the satisfaction of the instructor.

Learning Activities:

A. Read Technical Drawing, Giesecke et al., Chapter 1. Other references.

B. Read the following content outline:

1. The Universal Language

   a. Pictures have been used to communicate ideas since the earliest beginnings of man.

      (1) Early cave drawings
      (2) Heiroglyphics of ancient Egypt
      (3) Characters on clay tablets drawn by the Sumerians of the Mesopotamian civilization using square-tipped reeds.

   b. Graphic representation is the language of industry today and it is used universally in many occupations.

      (1) Architects
      (2) Engineers

         --Civil
         --Electrical
         --Mechanical
         --Structural

      (3) Designers
      (4) Illustrators
      (5) Cartographers

2. Drawing Categories

   a. Artistic drawing is usually done primarily for aesthetics.
   b. Categories of artistic drawing:

      (1) Painting
      (2) Pencil
      (3) Pen and Ink
      (4) Sculpture design

   c. Technical drawing is usually the functional preliminary for objects that are to be made or built.

(1) Solomon's temple

--Stones cut to shape

(2) Ancient ruins

--Parthenon
--Roman aqueducts
--Bridges and roads

(3) Modern examples

--Sears tower in Chicago
--Cape Kennedy rockets and launch site

3. Development of Technical Drawing

a. Earliest known drawing is the plan view on a stone tablet of a fortress drawn by a Chaldean engineer named Gudea.
b. Gaspard Monge (1746-1818) invented descriptive geometry.

(1) Kept secret until 1795 for military reasons

c. The first text was published in 1849 by William Minifie.
d. Blueprint process was introduced in 1876.
e. Third angle projection developed in U.S. at the turn of the 19th century.
e. Computer graphics is the latest modern innovation.

C. Analyze the four drawings on early methods of pavement construction and compare these with present day techniques.

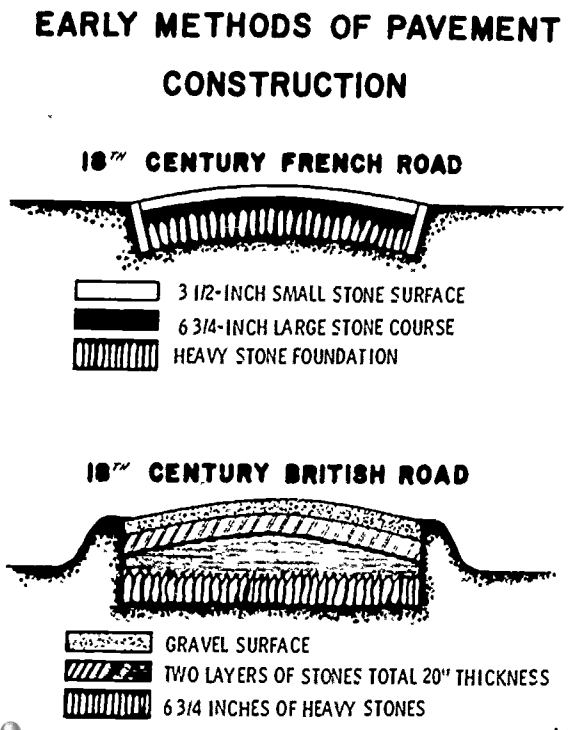

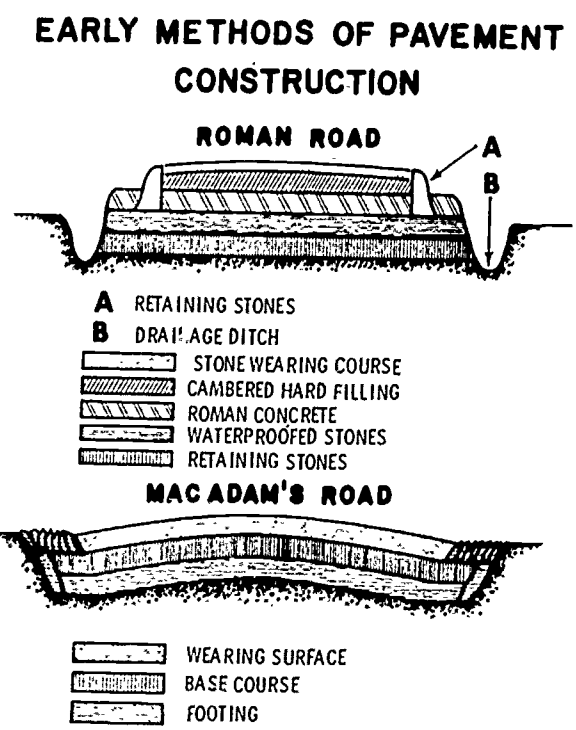

D. Criterion test

1. What is the universal language? Why?

2. How old is drafting?

3. Who was the Alteneder family?

4. What is first-angle projection and where is it used?

5. Who developed the theory of projections?

6. How does George Washington relate to drafting?

7. Cite an early Biblical reference to drafting.

8. What two types of drawings has man developed?

If, after completion of the criterion test, the instructor assigns no additional historical review, proceed to the next assignment.

E. Self Evaluation

It is suggested that throughout the entire course each student will periodically review all of his completed drawings and tests in order to personally determine how much progress is being made. Compare early drawings with current drawings. Ask yourself, "Could I have done better?" and "Have I improved since that time?" If you do recognize a deficiency, work harder in that area.

Lesson 2: Materials and Supplies

Performance objective: Identify expendable drafting supplies and materials and describe their usage.

Learning Activities:

A. Read Engineering Drawing and Design, Jensen, p. 14, pp. 22-25; Technical Drawing, Giesecke, et al., sections 2.7, 2.8, 2.9, 2.10, 2.12, 2.13, 2.50, 2.61, 2.62, 2.63, 2.64, 2.65.

B. Read the following content outline:

1. Types of Drafting Media

a. Opaque paper is used for layout and presentation work.

(1) Not for reproduction

b. Tracing papers are thin and transparent.

(1) Vellums

--Treated with oils, waxes, or other similar substances
--Deteriorate rapidly with age

(2) Untreated but transparent

--100% rag, good stock, will last indefinitely.

c. Tracing cloth is thin, transparent fabric sized with a starch compound or plastic.

d. Polyester film is rapidly replacing cloth and vellum as the medium of industry.

2. Types of Fastening Devices (to secure medium to drawing board)

   a. Tape is most commonly used.
   b. Thumb tacks and staples may be used, but leave puncture marks in the drawing board.

3. Pencils

   a. Wood enclosed
   b. Mechanical refillable

      (1) Plastic
      (2) Metal

4. Leads

   a. Grades vary from very hard (9H) to very soft (7B).
   b. Hard grade (9H thru 4H) are used for very light lines and layout work.
   c. Medium grades (3H, 2H, H, F, HB, B) are used for dark lines on technical drawings.
   d. Soft grades (2B thru 7B) are used for art work.
   e. There are two types of leads:

      (1) Graphite is used for all papers and cloths.
      (2) Plastic lead is used for drawing on film.

5. Sharpening and Pointing Devices

   a. Sandpaper pads
   b. Mechanical pointers

   NOTE: Sharpen end opposite grades marked on wooden pencils.

6. Types of Points

   a. Conical
   b. Wedge
   c. Bevel

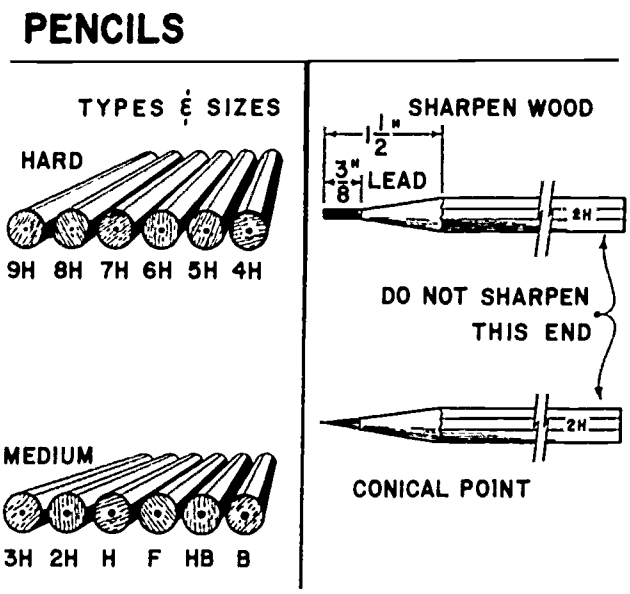

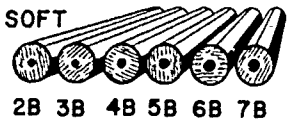

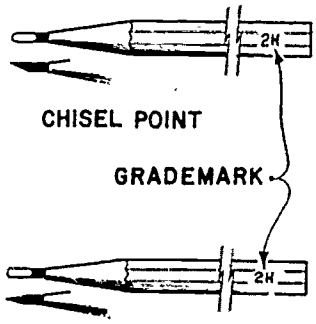

7. Erasing Devices

   a. Pink pearl
   b. Ruby
   c. Art gum
   d. Plastic
   e. Electric erasing machine
   f. Erasing shield

C. Criterion Test

1. List the types of drafting media and define work situations which might cause you to select each one.

2. What are some of the factors involved in the selection of pencils?

3. Demonstrate the proper techniques used to produce each of the three types of pencil points.

4. Why is a staple not a desirable fastening device?

PROCEED TO NEXT ASSIGNMENT.

Lesson 3: Drafting Equipment

Performance Objective: Given standard drafting equipment, prepare simple one-view drawings which will demonstrate the proper care and use of equipment and an awareness of the various line values.

Learning Activities:

A. Read Engineering Drawing, Zozzora, Chapter 4; Engineering Drawing and Design, Jensen, Chapter 2; Technical Drawing, Giesecke, et al., Chapter 2. Other references.

B. Read the following content outline:

1. Devices for Drawing Straight Lines

a. T-square

(1) Uses

--Horizontal lines
--Combination with triangles and other template

(2) Types

--Fixed head
--Adjustable head
--Removable head

(3) A disadvantage is that it is somewhat awkward to use

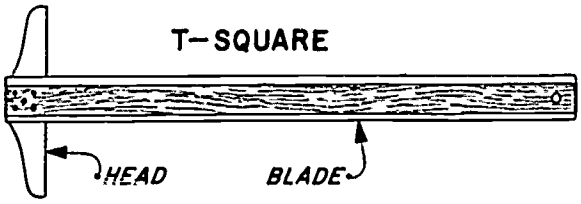

b. Parallel straight edge

(1) Uses

--Horizontal lines
--Combination with triangle and other templates

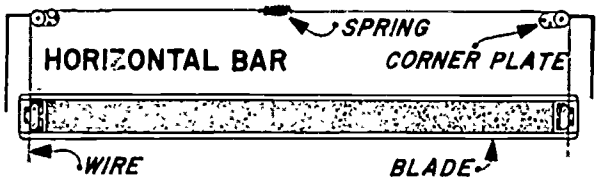

c. Drafting machine

(1) Uses

--Horizontal and vertical lines
--Diagonal lines

(2) Types

--Arm
--Track

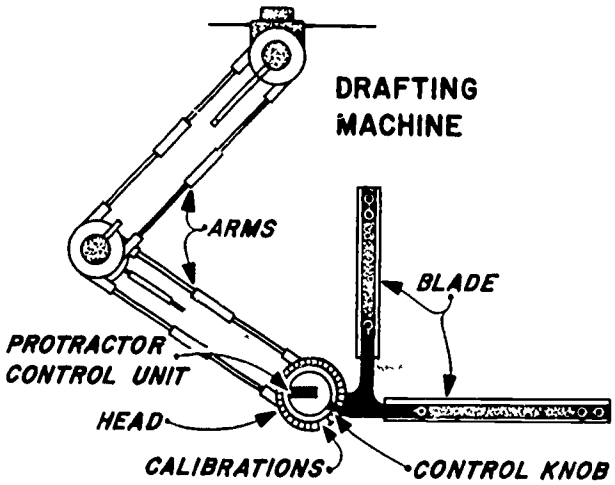

d. Triangles

(1) Uses

--Vertical lines
--Diagonal lines

(2) Types

--30 - 60 degrees
--45 degrees
--Adjustable

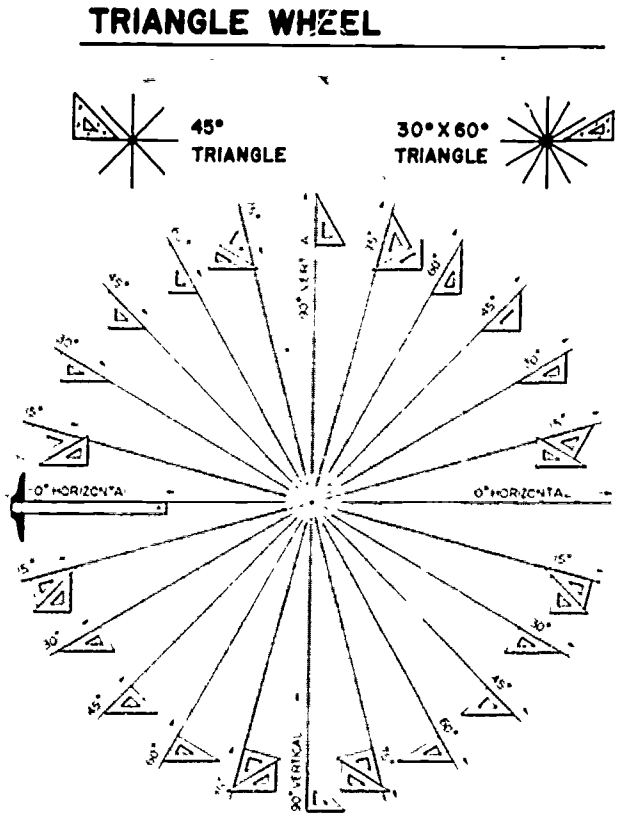

2. Scales

a. Measuring devices are used for laying out distances to full size and in proportion to full size.
b. Types of measuring units:

(1) Mechanical engineers scale

--Scaled to units: full size, half size, 1/4 size, 1/8 size

(2) Architects scales

--Scaled to units: full size, 3" = 1'0", 1 1/2" = 1'0", 3/4" = 1'0", 1/2" = 0", 3/8" = 1'0", 1/4" = 1'0", 1/8" - 1'0"

(3) Civil engineers scale

--Scale in decimals to units: 1" = 10', 1" = 20', 1" = 30', 1" = 40', 1" = 50', 1" = 60'

(4) Decimal scale

--Divided similarly to mechanical engineers scale but the units are decimal.

(5) Metric scale

--The meter is the standard linear unit of measure.

3. Instruments

a. Compasses are used for drawing circles and arcs.

(1) Large radii may require extension bar.

b. Dividers are used for dividing distances and transferring distances.

4. Miscellaneous Items

a. Protractors are used to measure angles.
b. Irregular or French curves are used to make smooth lines connecting irregularly placed points.
c. Time saver templates are used to draw frequently used shapes.

5. The Alphabet of Lines

NOTE: Refer to Engineering Drawing, Zozzora, Figures 3-6, 20-23. Engineering Drawing and Design, Jensen, pp. 10 thru 14. Technical Drawing, Giesecke, et al., Figures 2-15, 2-66, 5-5.

a. The weights and distinctive features of lines vary according to the definition and specific use.

(1) Object lines--thick, solid lines
(2) Hidden lines--medium weight consisting of equally spaced dashes
(3) Center lines--thin weight consisting of alternate long and short lines
(4) Extension lines--thin, solid lines
(5) Dimension lines--thin to medium weight line, solid lines, (except where dimensions occurs in machine drawing)
(6) Cutting--plane lines--thick weight consisting of alternate one long and two short dashes
(7) Section lining--thin, solid line
(8) Arrowheads--drawn to a proprotion of 3:1

ALPHABET OF PENCIL LINES

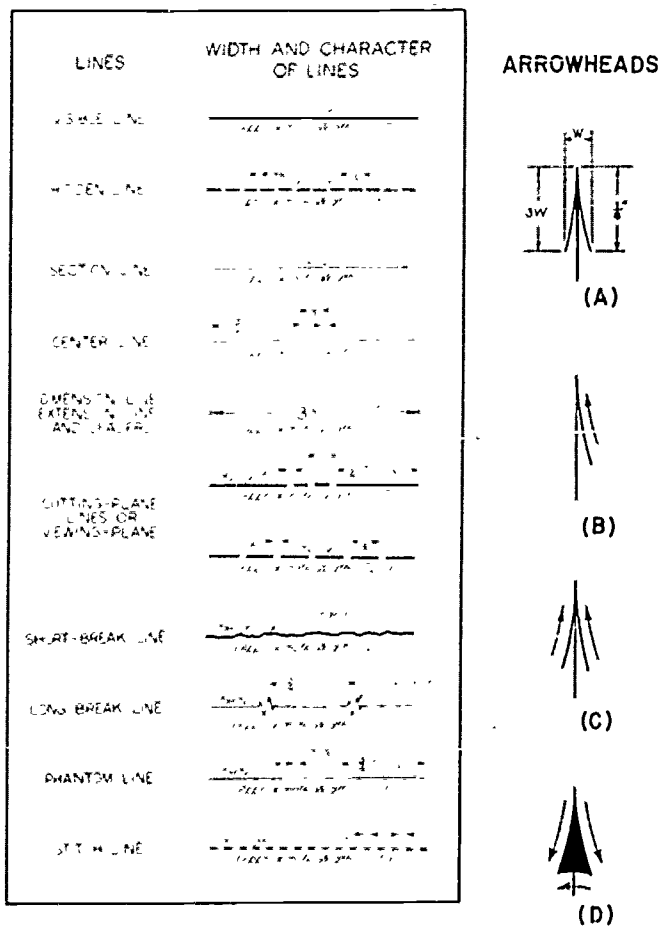

C. Criterion Test

1. How is a T-square checked for straightness?

2. Where is an object line used?

3. What angle increment can be drawn with the two basic triangles?

4. When is a protractor used?

5. What is a bow compass?

6. What is a flexible curve and how does it differ from an irregular curve?

7. Given several straight lines, determine their lengths using the following scale: 1/8 size, 3/8" = 1' -0", 1" = 30', 1/4 size in decimals, full size in metric.

8. Name the five types of scales used in drafting.

9. On a blank sheet of paper, practice drawing the various line weights using the drafting instruments and correct drafting procedures. See instructor for evaluation and help as needed.

10. Complete the following job assignments, as issued by your instructor, according to text being used. Submit for evaluation. Write in any special instructions in blank reference text space.

REFERENCE TEXT	ASSIGNMENT	RATING
Engineering Drawing and Design	Fig. 2.44 2.49	
Technical Drawing	Fig. 2-90 2-91	
Other Assigned Texts		

If you received a rating of 8.5 or above as an assignment average, proceed to the next lesson. If your average was less than 8.5, review your errors and complete the following assignments.

C. Criterion Test #2
(written test prepared by Region 14--Somerset Area Vo-Tech Center)

Circle the Identification Letter of the Correct Answer

1. A device used to draw straight horizontal lines is a:

   a. Protractor
   b. Scale
   c. Triangle
   d. T-square

2. A device used in making measurements is a:

   a. T-square
   b. Triangle
   c. Scale
   d. Protractor

3. A device used in drawing vertical lines is a:

   a. Scale
   b. Compass
   c. Triangle
   d. Protractor

4. A device used to measure angles not in multiples of 15° is a:

   a. Triangle
   b. Protractor
   c. T-square
   d. Scale

5. Lines which are drawn only for the purpose of "Blocking In" the object or locating points, edges, etc. are called:

   a. Borders
   b. Circles
   c. Construction Lines
   d. Title Blocks

6. Lines which are drawn to show the location of holes or the line of symmetry of the object are called:

   a. Outlines
   b. Centerlines
   c. Construction Lines
   d. Borders

7. Construction lines should be:

   a. Thick and light
   b. Thin and light
   c. Thin and dark
   d. Thick and dark

8. Centerlines should be:

   a. Thin and black
   b. Thick and black
   c. Thin and light
   d. Thick and light

9. The outline of the object should be drawn:

   a. In wide, black lines
   b. In thin, light lines
   c. In medium and light lines
   d. In medium and dark lines

10. Borders should be:

a. In medium width, black lines
b. In thin, light lines
c. In wide, black lines
d. In wide, light lines

11. A device for drawing circles larger than about 10" in diameter is a:

a. Ruling pen
b. Drop spring bow compass
c. Small bow compass
d. Beam compass

12. A device for drawing circles smaller than about 3/8" in diameter is a:

a. Drop spring bow compass
b. Beam compass
c. Large bow compass
d. Trammel

13. A device for drawing curved lines which are not circular or not parts of circles is a:

a. Large bow compass
b. Circle guide
c. French curve
d. Drafting machine

14. A scale which is graduated so that measurements can be made directly in full sizes, half sizes, quarter sizes, etc., is the:

a. Engineer's scale
b. Mechanical Draftsman's scale
c. Architect's scale
d. Decimal scale

15. A scale which is graduated so that measurements such as 1/4" = 1 ft., 2" = 1 ft., etc., can be made directly is the:

a. Engineer's scale
b. Mechanical Draftsman's scale
c. Architect's scale
d. Decimal scale

16. A scale graduated so that measurements such as 1" - 10 ft., 1" = 20 ft., 1" = 60 ft., can be made directly is the:

a. Engineer's scale
b. Mechanical Draftsman's scale
c. Architect's scale
d. Decimal scale

17. A scale which is graduated so that measurements such as 1/10", 1/75", 1/50" can be made directly is the:

a. Engineer's scale
b. Draftsman's scale
c. Architect's scale
d. Decimal scale

18. Arrowheads for dimensions on a drawing should be:

a. About 1/8" long and very thin and black
b. About 1/4" long and very thin and black
c. About 1/5" long and very thin and light
d. About 1/8" long and very thick and black

19. Complete the following job assignments and hand in for evaluation. See instructor before proceeding to next Block Assignment.

REFERENCE TEXT	ASSIGNMENT	RATING
Engineering Drawing and Design	Fig. 2.41 2.43 2.45D 2.45E	
Technical Drawing	Fig. 2.88 2.93 2.89	
Other assigned text		

Lesson 4 : Lettering

Performance Objective: Complete lettering plates using vertical and inclined techniques with lettering that is legible, neat, uniform, and spacially balanced.

Learning Activities:

A. Read Engineering Drawing, Zozzora, Chapter 1; Technical Drawing, Giesecke, et al., Chapter 3. Other references.

B. Read the following content outline:

1. Uses of Lettering

   a. To give a more complete description than can be shown by simple linework

      (1) Distances and quantities
      (2) Types of materials
      (3) Special notations
      (4) Unit identification

2. Lettering Styles

   a. Single stroke, upper case, commercial

      (1) Gothic is most used

         --Machine drawings
         --Architectural drawings

   b. Lower case--very seldom used

3. Lettering heights

   a. Heights of capital letters are produced in proportion to the size of the drawing and its function.
   b. In lettering fractions, the height of the total fraction is equal to twice the height of the whole number.

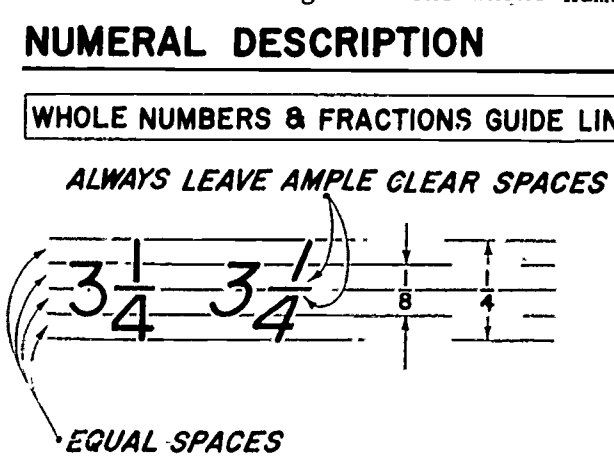

(1) THE HEIGHT OF THE TOTAL FRACTIONS IS TWICE THE HEIGHT OF THE WHOLE NUMBER.

(2) MOST COMMONLY USED HEIGHT FOR WHOLE NUMBERS IS $\frac{1}{8}$"

COMMON ERRORS

$\frac{5}{8}$ RIGHT	$\frac{5}{8}$ WRONG	$\frac{1}{4}$ RIGHT	$\frac{1}{4}$ WRONG
$\frac{3}{4}$ RIGHT	$3/4$ WRONG	$\frac{5}{9}$ RIGHT	$\frac{5}{9}$ WRONG

c. Guide lines are used to determine heights and distances between lines. They may be determined by use of:

(1) Ames lettering instrument
(2) Braddock-Rowe Lettering Triangle
(3) Bow dividers
(4) Visual proportions

4. Spacing of Letters and Words

a. Letters in words are not spaced at a uniform distance from each other. Instead, they are arranged so that the areas of the background spaces appear to be equal.
b. In spacing words, a good principle is to leave the space that would be taken by an assumed letter o.

5. Special Lettering Devices

a. Leroy lettering instrument
b. Wrico pen and guide
c. Varigraph
d. Letterguide

C. Criterion Test

1. What are two purposes for using horizontal and vertical guidelines?

2. How do you determine the spacing between letters? Between words?

3. Approximately what lead weight should be used when drawing guidelines?

4. What is the standard lettering style most commonly used?

5. What is the name of the symbol used for the word "and"?

6. To what degree should sloping guidelines be drawn?

7. What are some of the factors that contribute to good lettering?

8. Complete the following performance job assignments.

   a. On a standard size sheet, do a lettering plate consisting of alphabets and numbers using both vertical and inclined commercial Gothic.
   b. After completion of this plate, see your instructor for a progress check and then proceed to assignments below:

REFERENCE TEXT	ASSIGNMENT	RATING
Engineering Drawing	Ref. 1-2 1-4 1-7 1-12	
Technical Drawing	Fig. 3-46 3-47 3-48 3-49	
Instructor's Suggested Text		

SEE INSTRUCTOR BEFORE PROCEEDING TO NEXT BLOCK ASSIGNMENT.

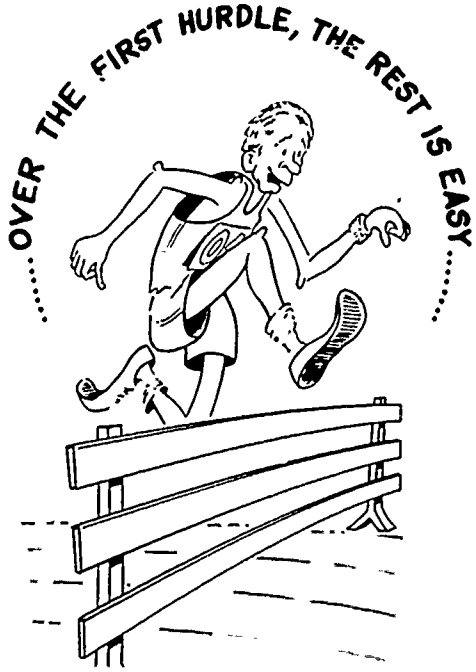

BLOCK 2 GEOMETRIC CONSTRUCTION

BASIC DRAFTING STUDENT MANUAL

GENERAL OBJECTIVES FOR BLOCK 2

1. Demonstrate the proper use of instruments and application of geometric construction techniques by performing the following competencies:

   --Bisect a line or arc

   --Bisect an angle

   --Divide a line into equal or proportional parts

   --Draw the following polygons: triangle, square, pentagon, hexagon, octagon

   --Draw a regular polygon of any number of sides

   --Draw an arc tangent to a line, a given arc

   --Draw an ellipse: four center method, concentric circle method, slanting method, parallelogram method

   --Draw a parabola

Directions for Use of Block 2 of the Basic Drafting Student Manual

This block is designed for student use in individualized programmed instruction. You may advance through the block at as rapid a rate of progress as fits your learning needs.

On this sheet, you will find a competency pretest. If you have had previous exposure to any of the information outlined in the general objectives on the cover page for this block, perform the pretests and submit the solutions to your instructor. If you have had no exposure to this phase of drafting, proceed to the section marked "Lesson 1" and work through the outlined learning activities.

Pretest for Block 2

1. When is a straight line tangent to an arc?

2. What may be said of the relationship between two arcs and their point of tangency?

3. When a straight line is tangent to an arc, what is the relationship between the radius center and the point of tangency relative to the line?

4. Define: bisect, pentagon, polygon, obtuse, hexagon, ellipse.

5. Complete one of the following drawings:

TEXT	ASSIGNMENT	RATING
Technical Drawing Engineering Drawing (Instructor's assigned drawing)	Fig. 4-78 Fig. 5-21	

SEE INSTRUCTOR FOR NEXT ASSIGNMENT.

Introductory Statement

The beginning lessons in this block consist of a series of short exercises which are designed to establish an applied graphic background for the techniques of geometric construction. Each lesson will have a performance objective and operational practice steps. They may require only a written criterion test, as the practice sheets will suffice to determine whether or not the graphic application of the theory has been learned.

The combined techniques from the beginning lessons may then be used in solving more exacting problems as presented at the end of the block. One series of performance criterion tests will be given at the completion of the exercises, and they should be handed in to the instructor for evaluation.

The techniques of geometric construction are methods, tools, and time-saving devices with which technical details may be treated efficiently. They should be utilized by draftsmen whenever warranted and applicable. You may expect to find many opportunities to use them during the rest of this course.

CIRCLES

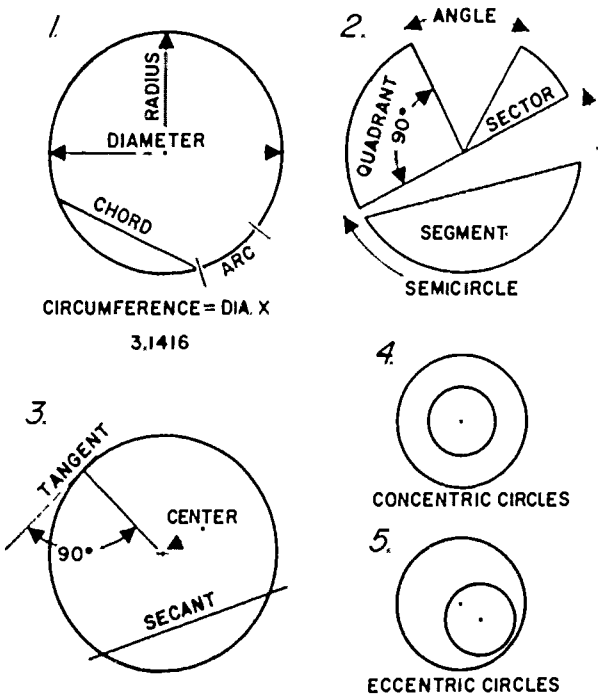

ANGLES

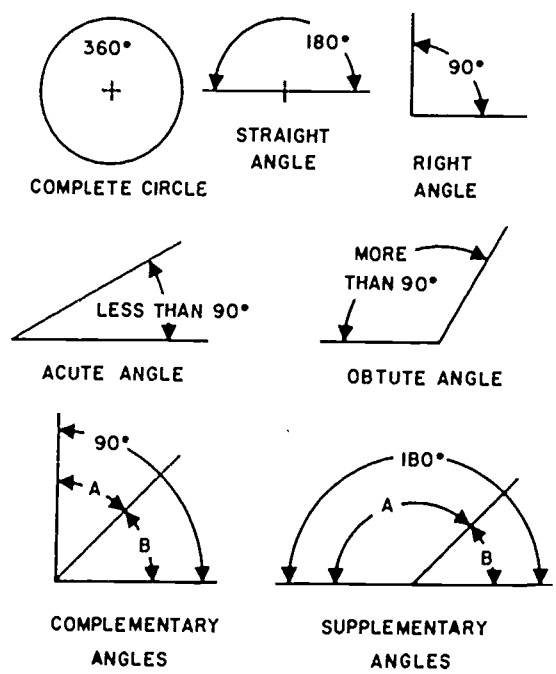

Lesson 1: Bisecting Lines, Arcs, and Angles

Performance Objective: Given specific lines, angles, and arcs, bisect into equal lengths by using only a compass, a straight edge and a pencil.

Learning Activities:

A. Read Technical Drawing, Giesecke, et al., sections 4-9, 4-11; Engineering Drawing, Zozzora, sections 5.1, 5.2; Engineering Drawing and Design, Jensen page 36. Other references.

B. Practice the following operational steps.

1. Bisect a straight line.

   a. Set up for drawing.
   b. Draw a straight line to any length.
   c. Using the extreme ends of the lines as radius centers and a radius that is greater than half the line length, swing arcs that intersect at two places.
   d. Draw a straight line through the points of intersection. This line will cross the given line at the midpoint and be perpendicular to it.

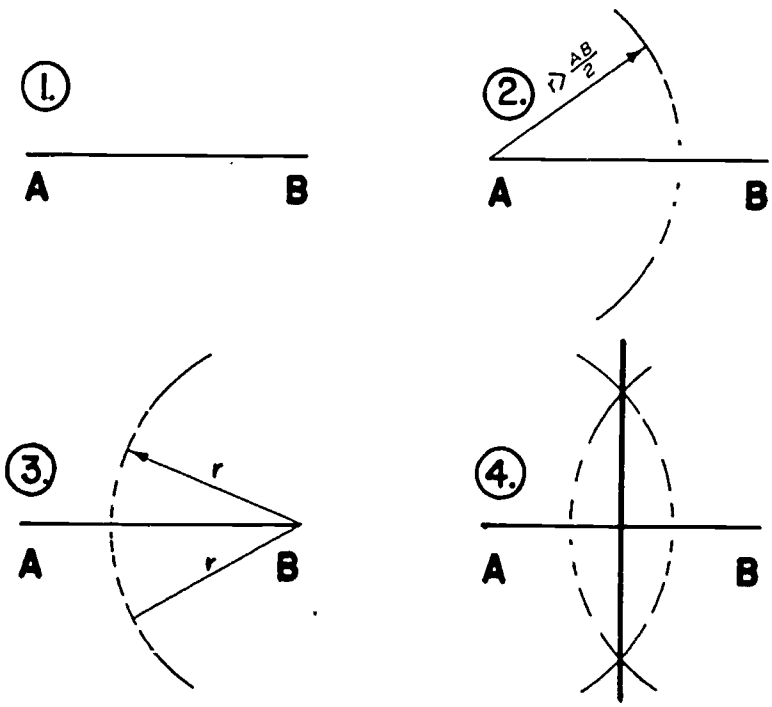

2. Bisect an arc.

   a. The process for bisecting an arc is the same as that for bisecting a straight line. The radius center described in step "c" is located at the extreme end points of the given arc.

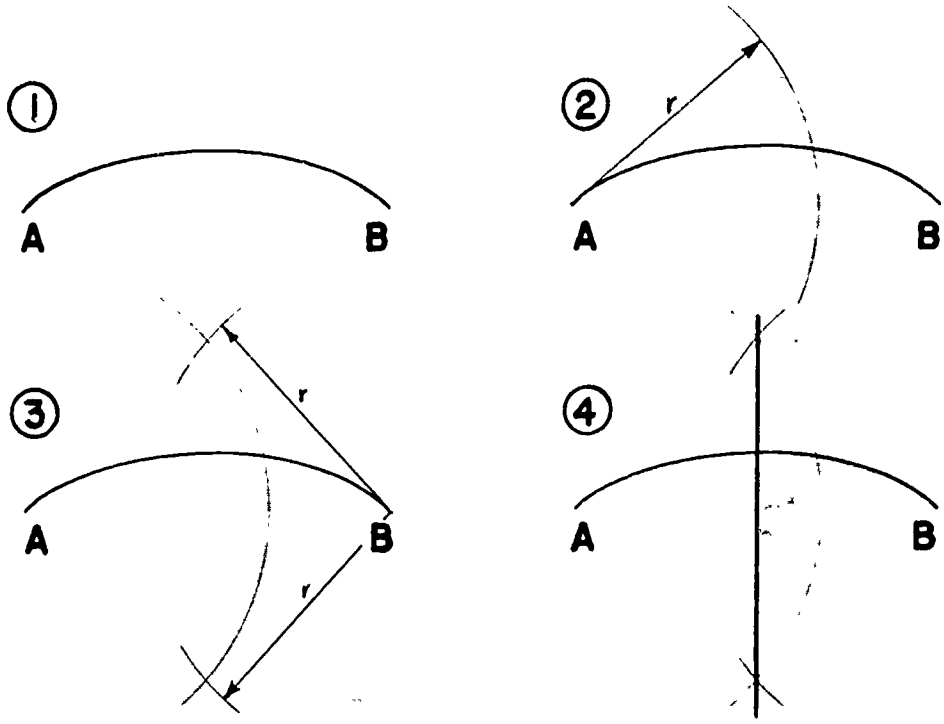

3. Bisect an angle.

   a. Draw an angle of any given magnitude.
   b. Using the vertex of the angle as a radius center, swing an arc of any magnitude until it crosses both sides of the angle.
   c. Taking the intersections of the arc and the angle as the new radius centers, strike two equal arcs that cross outside the total figure.
   d. A straight line connecting the intersection of the two arcs with the apex of the angle will divide the angle into two equal parts.

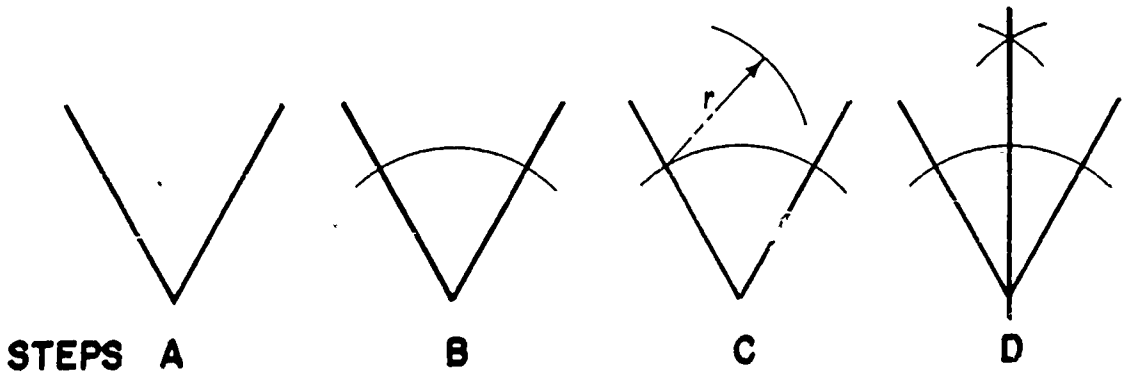

C. Criterion Test

1. Cite at least two instances where draftsmen and other craftsmen may use geometric constructions in their work.

2. Define bisect.

3. What is meant by radius? What is its relationship to diameter and circumference?

4. What is an angle?

5. What is meant by perpendicular?

6. What is vertex?

Lesson 2: Dividing Lines Into Proportional Parts

Performance Objective: Given a line of any length (known or unknown), divide it into any given number of equal lengths by using only two triangles and a pair of dividers, or divide it into any given proportional lengths by using a scale and two triangles.

Learning Activities:

A. Read Technical Drawing, Giesecke, et al., section 4.15; Engineering Drawing, Zozzora, section 5-4; Engineering Drawing and Design, Jensen page 36. Other references.

B. Practice the following operational steps:

1. Draw a line of any given magnitude.
2. From one end of the line, draw a light construction line at any convenient angle.
3. Using the dividers (at any setting) and starting from the vertex of the angle, step off the required number of spaces along the construction line.
4. Using a triangle, draw a second light line which connects the last point on the first construction line with the other end of the given line.
5. A series of lines drawn parallel to this last construction line, extending from the division points on the first construction line to the given line, will divide the given line into the required number of spaces.

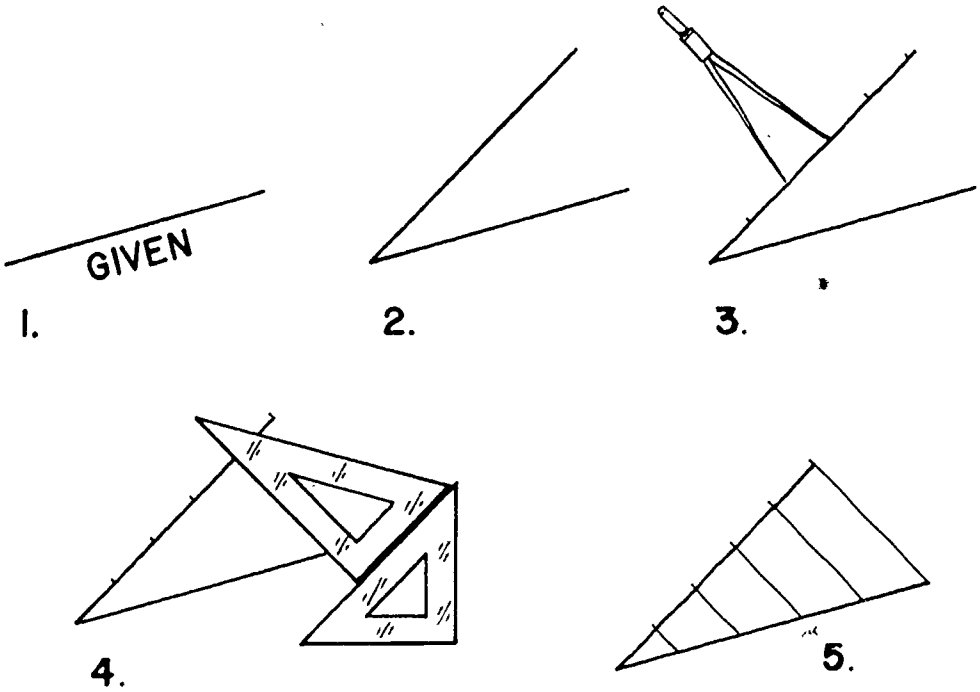

6. Divide a line into a given number of proportional lengths.

   a. Draw a line of any given magnitude.
   b. From one end of the line, draw a light construction line at any convenient angle.
   c. Using a scale and starting from the vertex of the angle, mark off the proportional parts along the construction line.
   d. Using a triangle, draw a second light line which connects the last point on the first construction line with the other end of the given line.
   e. A series of lines drawn parallel to this last construction line, extending from the division points on the first construction line to the given line, will divide the given line into the required number of spaces.

   NOTE: Only step "c" differs from the previous exercise.

C. Criterion Test

1. What are parallel lines?

2. What are three practical applications for dividing a line into equal lengths?

IF YOU FULLY UNDERSTAND THE OPERATION, GO TO THE NEXT ASSIGNED LESSON.

Lesson 3: Triangles

Performance Objective: Given the lengths of all three sides, construct a triangle by using only a straight edge and a triangle.

Learning Activities:

A. Read Technical Drawing, Giesecke, et al., section 4.19; Engineering Drawing, Zozzora, section 5-7. Other references.

B. Given the lengths of the sides of a triangle, practice the following operational steps.

1. Draw one side in the desired position (line 1).
2. Using the length of another side (line 2) as a radius, and one end of line 1 as the radius center, strike an arc of undetermined length.

   NOTE: You may approximate where the vertex of the triangle will be located and swing the arc through this area.

3. Using the length of the remaining side (line 3) as a radius and the other end of line 1 as the radius center, strike an arc that crosses the first arc. The intersection of these two arcs will locate the vertex of the triangle.
4. Complete all three sides.

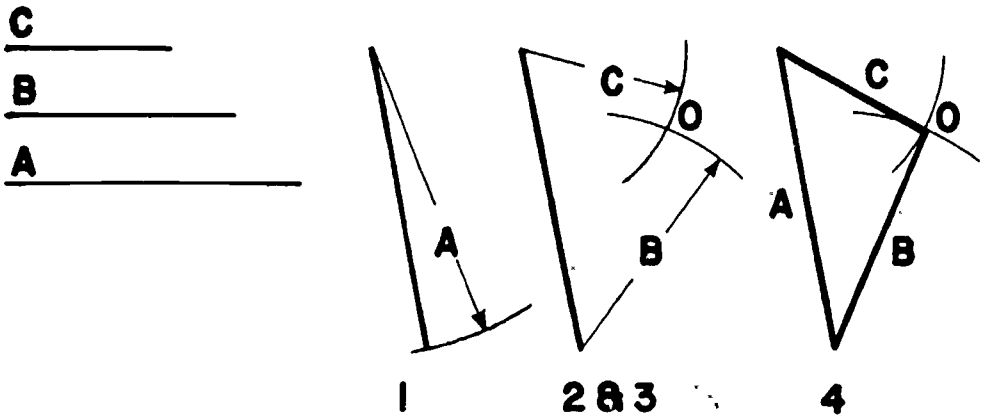

C. Criterion Test

1. Define the following angles: equilateral, isosceles, scalene, right.

2. How many degrees are in a triangle?

D. You will be required to perform this operation in Lesson 4.

Lesson 4: Dividng a Triangle into Equal Areas

Performance Objective: Given the lengths of all three sides of a triangle, divide the triangle (or trapezoid) into a given number of equal areas. Utilize the methods of construction presented in the previous lessons.

Learning Activities:

A. Read Engineering Drawing, Zozzora, section 5-13.

B. Given the lengths of the sides of a triangle, practice the following operational steps.

1. Construct the triangle using the method outlined in Lesson 3 of this block.

2. Select one side of the triangle and bisect this line.(Lesson 1)

   NOTE: Do not choose the side of the triangle that the area division will be drawn parallel to. This side will be the base. The bisector will be the radius center for a semicircle that has the selected triangle side as a diameter.

3. Divide the side of the triangle into the required number of lengths. (Lesson 2)

4. Using the corner of the triangle which is opposite the base as a radius center and the intersection or the semicircle as a radius, swing arcs to intersect the selected side of the triangle.

5. Project perpendiculars from the division points until they intersect with the semicircle.

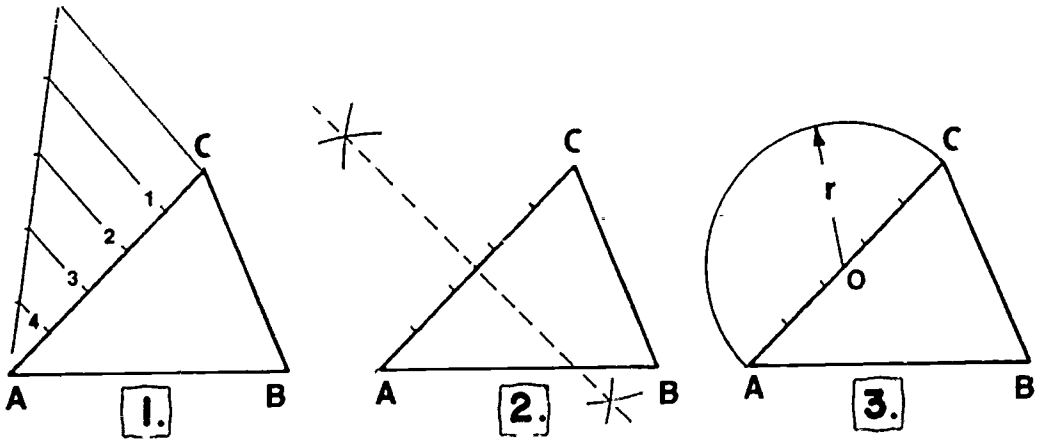

6. Lines drawn through these intersections and parallel to the bases will divide the triangles into equal areas.

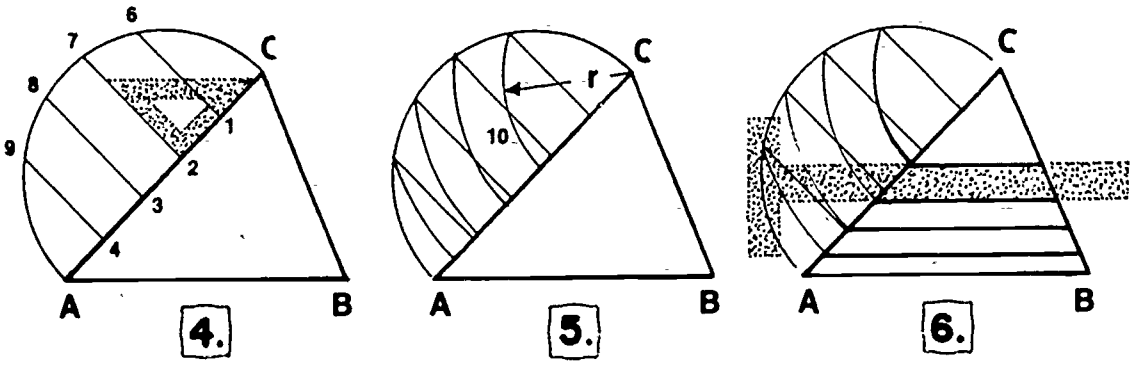

C. Criterion Test

1. The sides of a triangle are 2 1/2", 3", and 1 3/4". Divide it into seven equal areas with sides parallel to the 3" base.

Lesson 5: Regular Polygons

Performance Objective: Given necessary specifications, construct regular polygons by using the geometrical methods.

Learning Activities:

A. Read Technical Drawing, Giesecke, et al., sections 4.23, 4.24, 4.25, 4.26, 4.27, 4.28; Engineering Drawing, Zozzora, sections 5-6, 5-8, 5-9, 5-10, 5-11; Engineering Drawing and Design, Jensen, pages 36, 37, 38.

B. Read the following content outline:

1. Definition of Polygon

   a. A polygon is a closed plane figure bounded by straight lines containing any number of sides.

2. Regular Polygon

   a. All sides equal
   b. All angles equal
   c. Can be inscribed in a circle
   d. Can be circumscribed around a circle

NOTE: The following exercises are written with no equipment restrictions. However, based upon previous learning activities, you should be able to construct the figures by using only a compass, both triangles, and pencil. Can you discover the required techniques?

C. Practice the following operational steps:

1. Construct a square.

   a. Draw a line to any given length.
   b. Erect a perpendicular at one end of the line.
   c. Strike an arc of radius equal to the length of the given side that crosses the perpendicular. This will establish the length of side #2 of the square.
   d. Using the given radius and the ends of the two known sides as radius centers, swing arcs that intersect at a point which locates the remaining corner of the square.
   e. Complete the square.

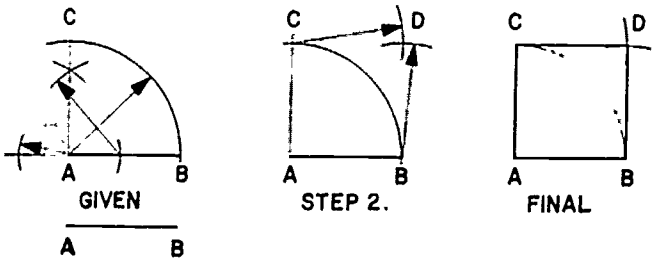

2. Construct a pentagon.

a. Draw the given circumscribing circle.
b. Draw horizontal and vertical center lines and assume them to be the X-Y axes of a cartesian coordinate system with the circumscribing circle as its boundaries.
c. Bisect the positive arm of the X-axis.
d. Using the bisector as the radius center and the radius equal in length to the distance from the bisector to the intersection of the circle with the positive Y-axis swing an arc until it crosses the negative arm of the X-axis.

NOTE: The distance from this intersection to intersection of the Y-axis with the circle is equal to the length of one side of the pentagon.

e. Starting from the top of the circle, step off all five sides around the circle with the dividers set at the distance equal to one side of the pentagon.

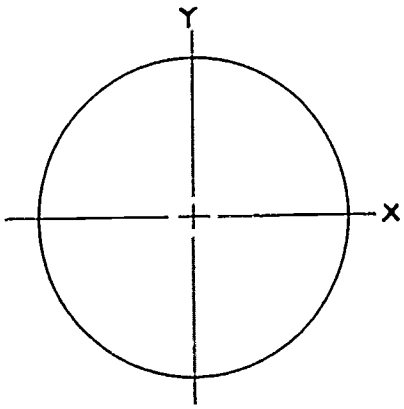

GIVEN

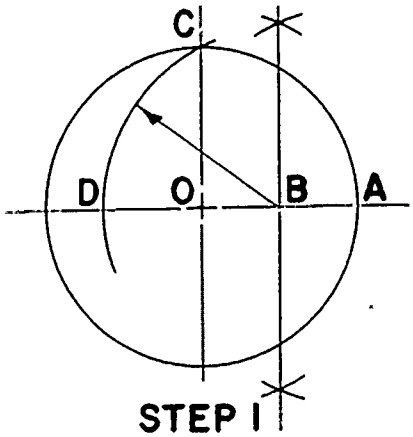

STEP I

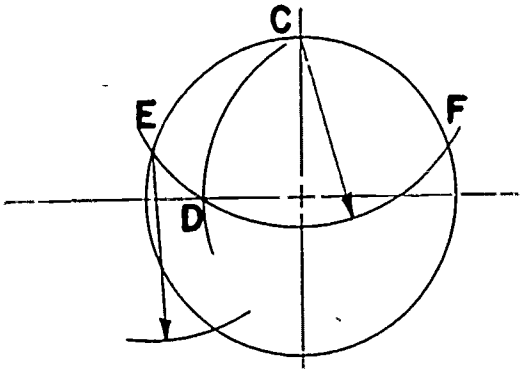

STEP 2

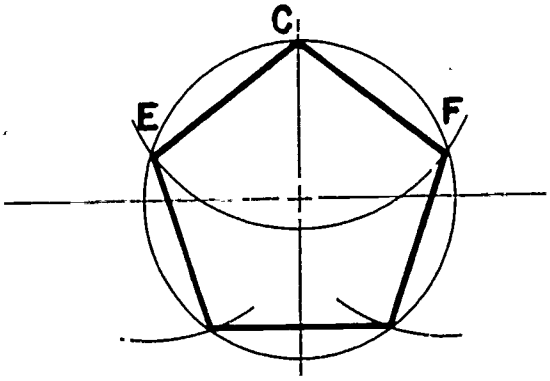

FINAL

3. Construct a hexagon.

a. Given the distance across the flats:

(1) Draw inscribed circle.
(2) Draw horizontal and vertical centerlines.
(3) Using the 60° angle and the horizontal straight edge or the 30° angle and the vertical straight edge, according to the orientation of the hexagon, draw the six sides tangent to the circle.

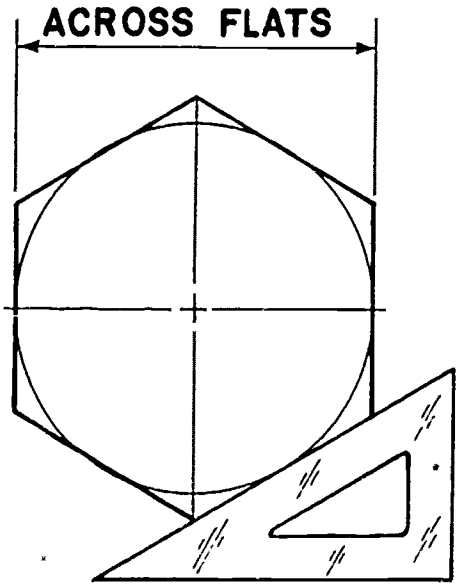

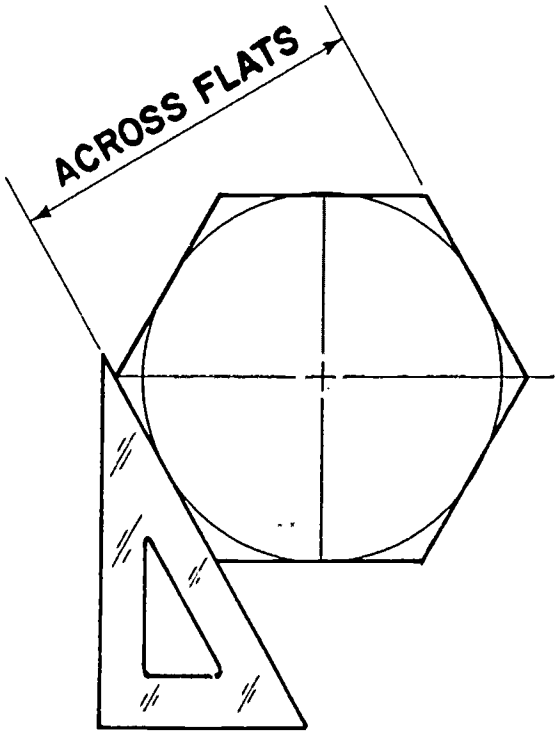

b. Given the distance across the corners:

(1) Draw the circumscribed circle.
(2) Draw the horizontal and vertical centerlines.
(3) According to the orientation of the hexagon, draw 30° diagonals or 60° diagonals through the radius center. They should intersect the circumscribed circle.

(4) Connect the points of intersection to complete the figure.

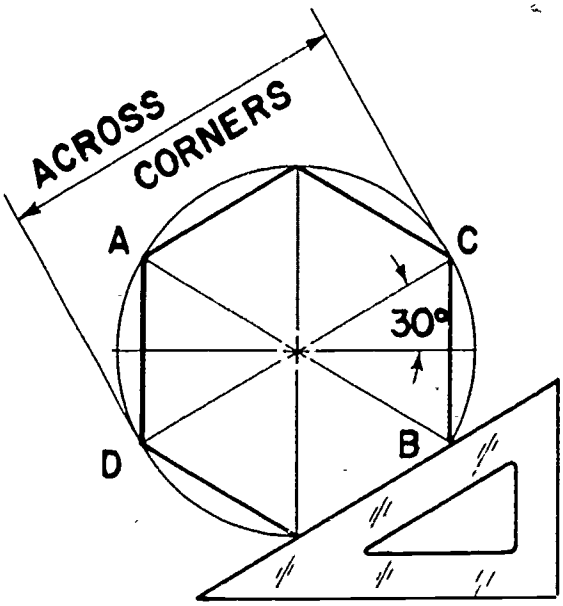

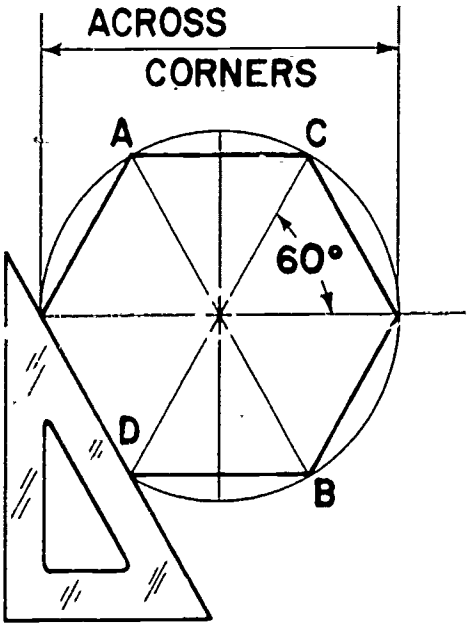

4. Construct an octagon.

   a. Given the distance across the flats:

      (1) Draw inscribed circle.
      (2) Draw eight sides tangent to the circle using the straight edge and 45° triangle.

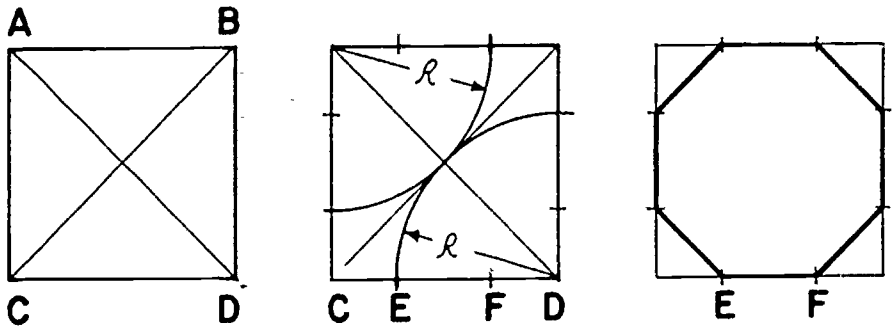

STEP 1 STEP 2 FINAL

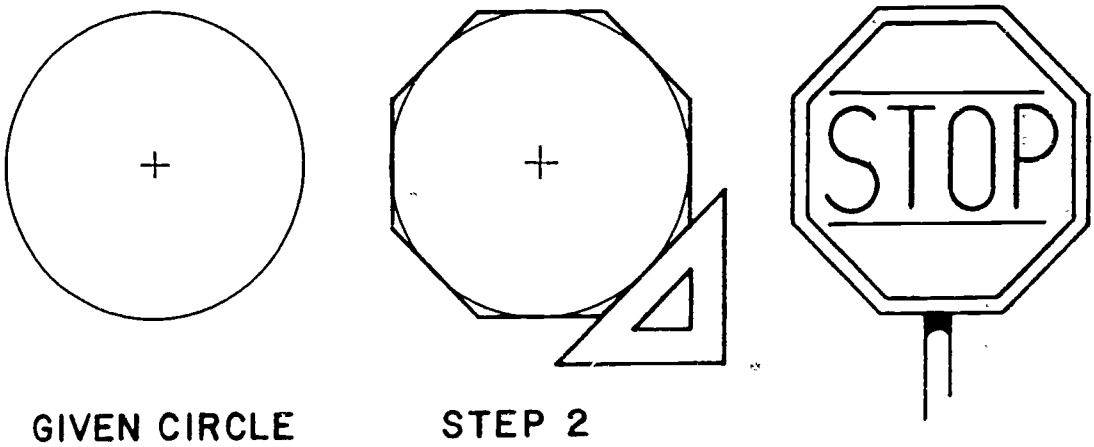

GIVEN CIRCLE STEP 2

5. Construct a regular polygon of any number of sides.

a. Given the length of one side:

(1) Swing a semi-circular arc with the given length as radius.
(2) Using dividers, divide the semicircle into the same number of equal spaces as are sides on the polygon.
(3) Draw radial lines through the points on the semicircle.
(4) With compass still set at a radius equal to the length of one side, take the end of the given side which touches the semi-circle as a new radius center and swing an arc that intersects the radial line just above it. This will locate side two of the polygon.
(5) Repeat procedures until all sides of the polygon are located and complete the figure.

GIVEN
LENGTH OF ONE SIDE

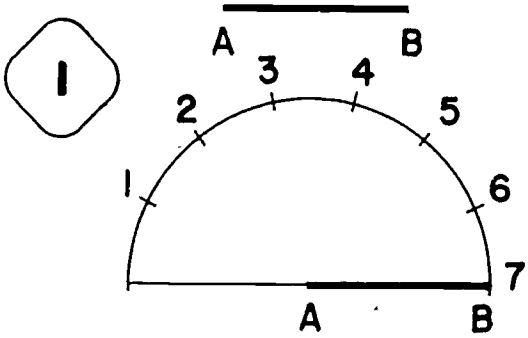

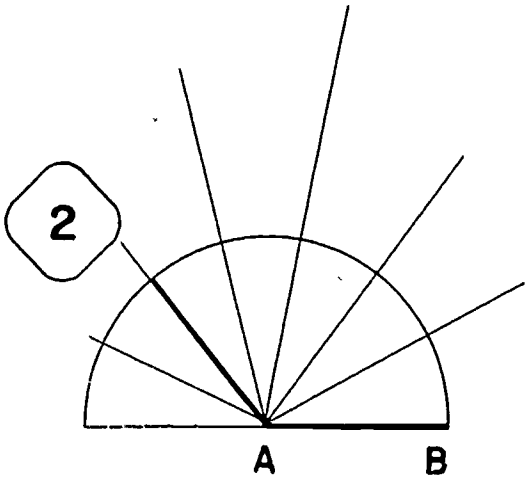

DISTANCES EQUAL LENGTH A.B.

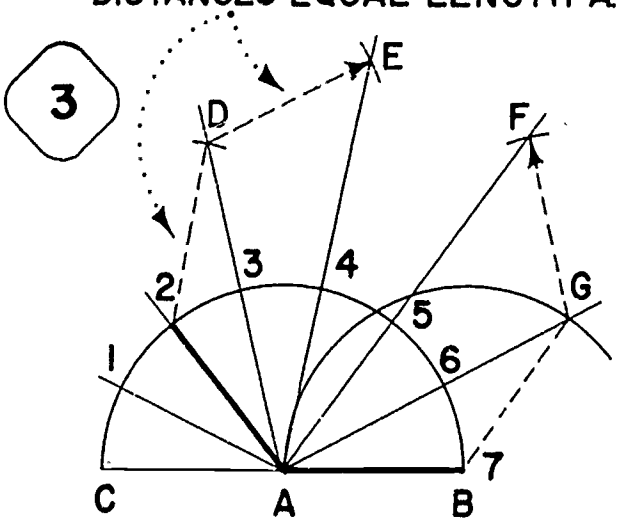

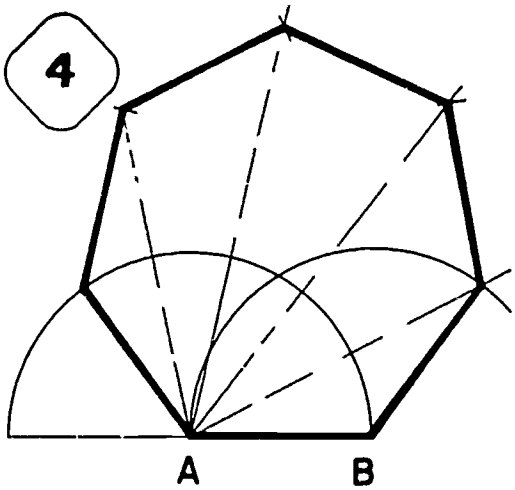

D. Criterion Test

1. Draw a 3" star.

2. Identify the following: pentagon, polygon, hexagon, octagon.

3. Draw a octagon 2" across the flats.

4. Draw a regular nine-sided polygon with each side equal to 3/4".

5. Given a 3" inscribing circle, construct a hexagon.

Lesson 6: Tangent Arcs

Performance Objective: Given regular lines, construct tangent arcs by using geometrical methods.

Learning Activities:

A. Read Technical Drawing, Giesecke, et al., sections 4.35 thru 4.45; Engineering Drawing, Zozzora, sections 5-14 thru 5-22; Engineering Drawing and Design, Jensen, pages 38, 39, 40.

B. Read the following content information:

1. In drawing an arc tangent to a straight line, a line drawn through the point of tangency and the radius center of the arc will always be perpendicular to the given line.

2. In drawing one arc tangent to another arc, a straight line drawn through the two radius centers will always pass through the point of tangency. This is very important in determining whether to add or subtract radii when locating the new radius center.

C. Practice the following operations:

1. Draw an arc of a given radius tangent to two lines that form a right angle.

RIGHT ANGLES

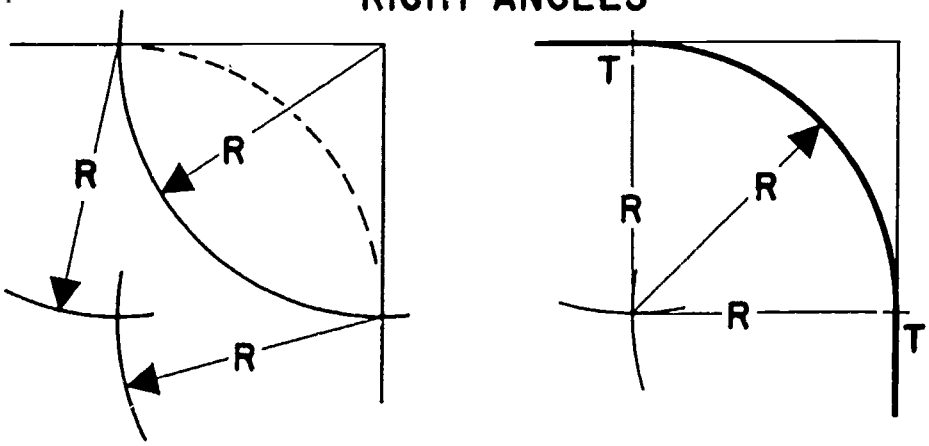

a. Using the right angle intersection as a radius center, strike an arc of the given radius which intersects both sides of the angle.
b. Using these new intersections as radius centers and without changing the adjustment on the compass, strike two arcs which intersect within the right angle. This will be the radius center for the arc tangent.
c. Complete the shape.

2. Draw an arc of a given radius tangent to two lines that form an obtuse angle or an acute angle. The procedure is similar for both operations.

   a. At any distance on the straight lines which form the angles, establish a radius center.
   b. With the compass set at a given radius, strike two arcs which fall within the angle.
   c. Draw lines parallel to the angle sides and tangent to the two arcs until they intersect. This is the radius center for the tangent arc.
   d. Without changing the adjustment on the compass, strike the arc and complete the shape.

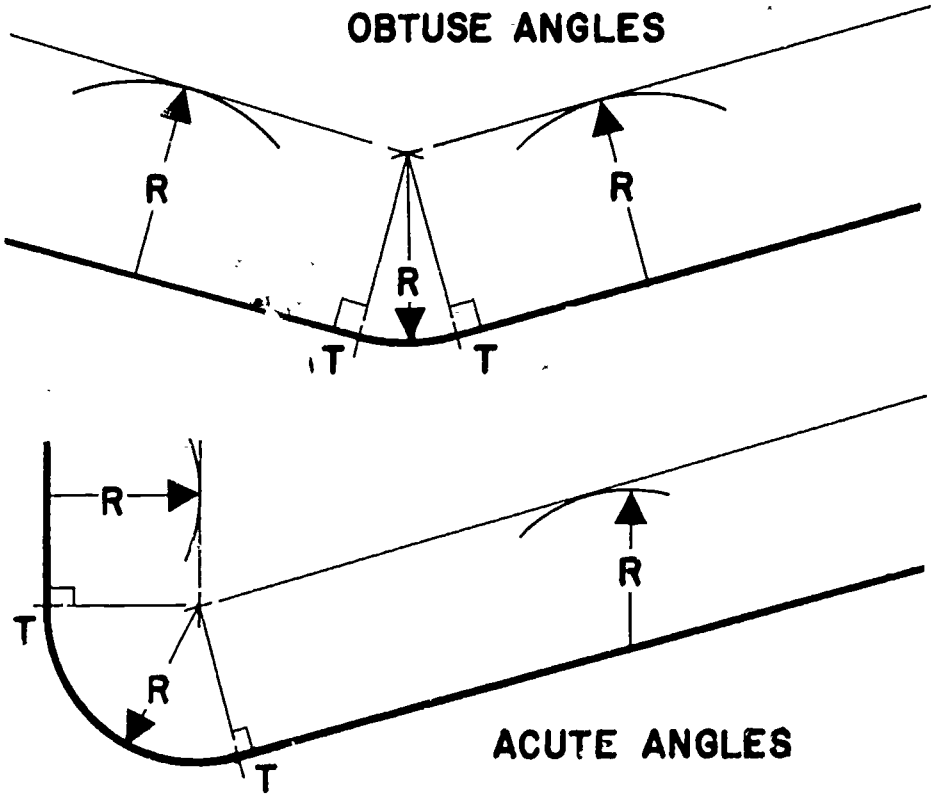

3. Draw an arc of a given radius tangent to another arc and a straight line. There are three given situations.

NOTE: A straight line drawn through the radius centers of two tangent arcs will always pass through the point of tangency.

a. Using any point on the existing arc as a radius center, strike an arc of the given radius.
b. Using the radius center of the existing arc, strike an arc which is tangent to the arc established in step (a). This would be the same as adding the two arcs.
c. At any distance on the straight line, strike an arc of the given radius.
d. Draw a line tangent to this arc and parallel to the given line until it intersects the arc from step (b). This is the radius center for the tangent arc.
e. Complete the shape.

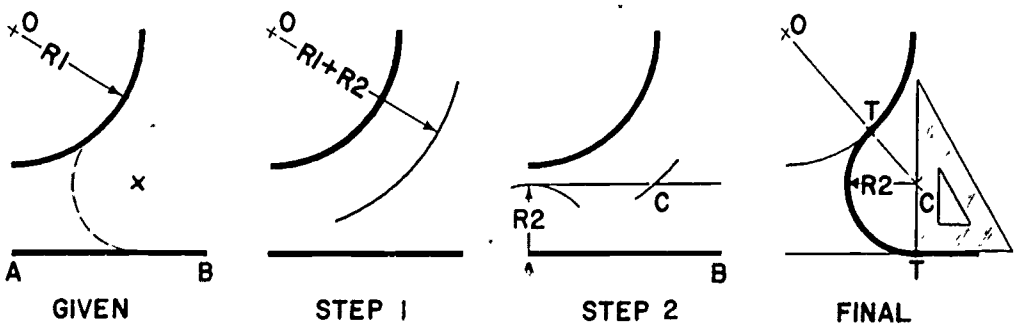

f. The steps for the solution of the following situation are the same as those described in the first example.

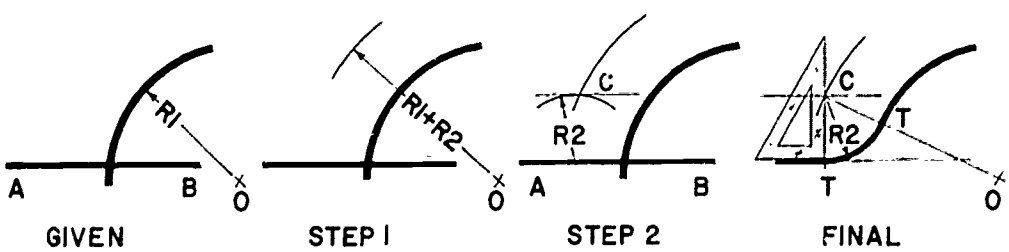

g. The steps for the solution of the following situation are essentially the same as those described in the first example. The only significant difference occurs in step "b" where in effect the radius of the given arc is subtracted from the radius of the existing arc.

NOTE: The arc established in step (a) will always be drawn in the direction where it is known that the radius center of the tangent arc will be located.

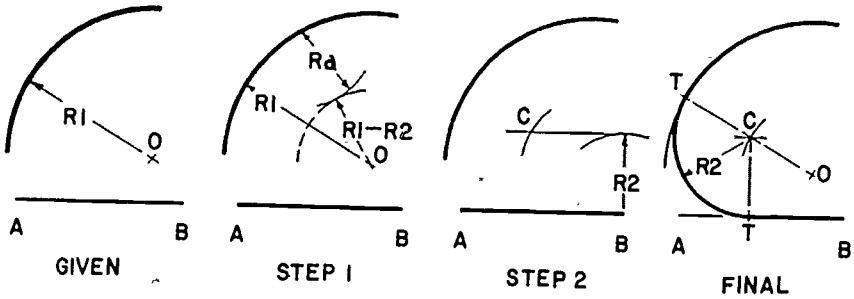

4. Draw an arc of a given radius tangent to two other arcs. There are three given situations.

a. Using any point on the two existing arcs as radius centers, strike arcs of the given radius in the direction of the final tangent arc radius.
b. Using the radius centers of the existing arcs, strike intersecting arcs which are tangent to the arcs established in step (a). This is an addition of radii procedure.
c. Taking the intersection as the tangent arc radius center, complete the figure.

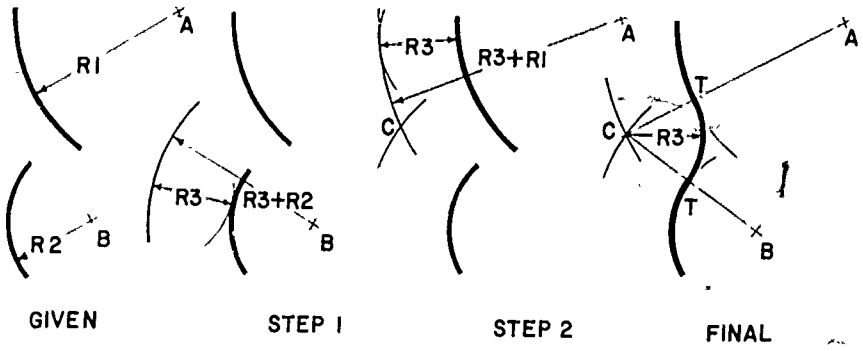

d. The solution steps are the same as the first example except in step (b) a subtraction procedure is involved.

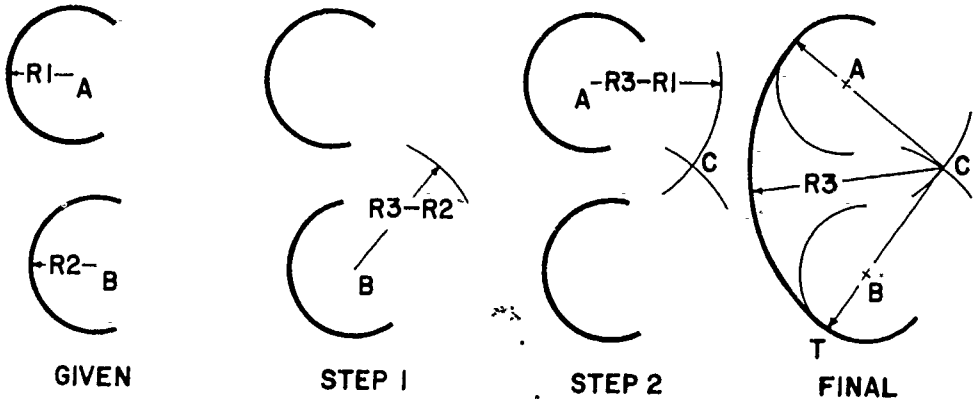

e. This situation involves one addition procedure and one subtraction procedure.

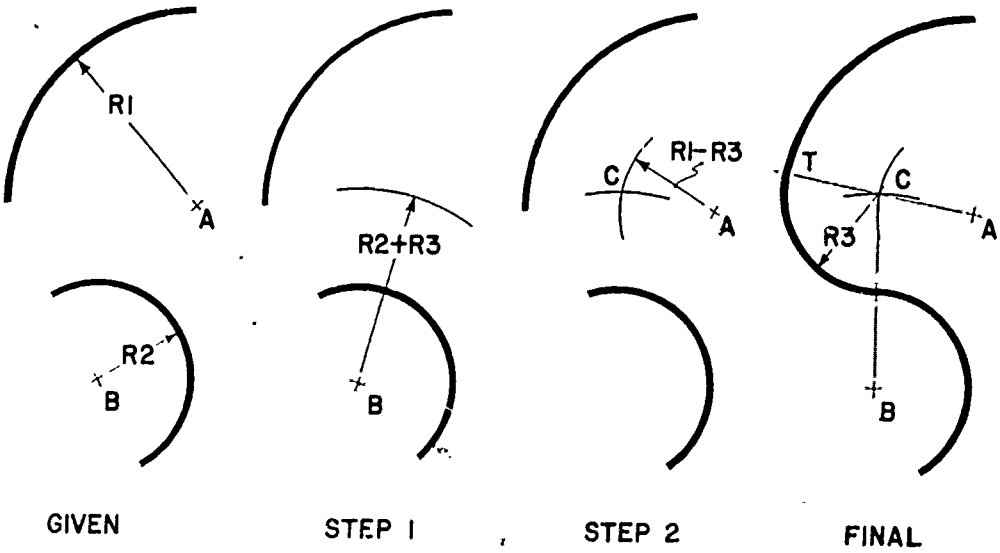

NOTE: Check the point of tangency by drawing a straight line through each given radius and found radius.

Check practice steps for correctness of procedure and proceed to next assigned lesson.

Lesson 7: Ellipse

Performance Objective: Given the major and minor axes, draw an ellipse by using five different methods of construction.

Learning Activities:

A. Read Technical Drawing, Giesecke, et al., sections 4.48, 4.50, 4.52, 4.54, 4.58; Engineering Drawing, Zozzora, sections 5-26, 5-27, 5-28, 5-29, 5-30; Engineering Drawing and Design, Jensen, pages 40 and 41.

B. Read the following informational content:

1. An ellipse is a conic section produced by an oblique plane intersecting a right circular cone above the base.

2. The long axis is the major axis and the short axis is the minor axis.

3. The foci method, concentric circle method, and parallelogram method are drawn by plotting points and using the irregular curves.

4. The four-center method and Slantz method permit the use of the compass in drawing the ellipse.

C. Perform the following operations:

1. Draw an ellipse using each of the following methods of construction:

a. Foci method

(1) Given the major and minor axes, locate the foci on the major axis by taking 1/2 the major axis as a radius and the end of the minor axis as radius center, striking an arc which intersects the major axis.
(2) Divide the distance from the origin to a focus into an arbitrary number of spaces.
(3) Taking the distance C1 as a radius, strike an arc from focus E.
(4) Taking the distance D - as a radius, strike an arc from focus F which intersects the arc of the previous step. This locates one point on the ellipse.
(5) Repeat the procedure until enough points have been located to completely describe the ellipse.

Foci method (cont'd)

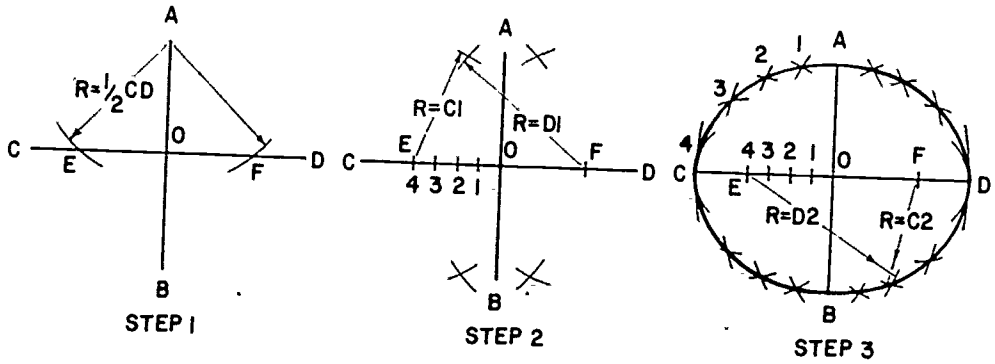

b. Four-center method

(1) Connect the end points of the major and minor axes.
(2) Taking the distance from the origin to the end of the major axis as a radius, strike an arc until it crosses the minor axis at point P.
(3) Using the end point of the minor axis as radius center and the distance to P as the radius, strike an arc that crosses the line in Step (1) at point R.
(4) Bisect the remaining distance of this line. The bisector will cross the major axis to locate one radius center on the ellipse and will intersect with an extension of the minor axis to locate the other one.
(5) Repeat the procedure to locate the remaining radius centers.
(6) Check for accuracy. Lines PS and ZG should be parallel. Lines PZ and GS should be parallel. Extensions of these lines will pass through the points of tangency of the circles which make up the ellipse.
(7) Using the radius centers and the distances to the ends of the axes, strike arcs to construct ellipse.

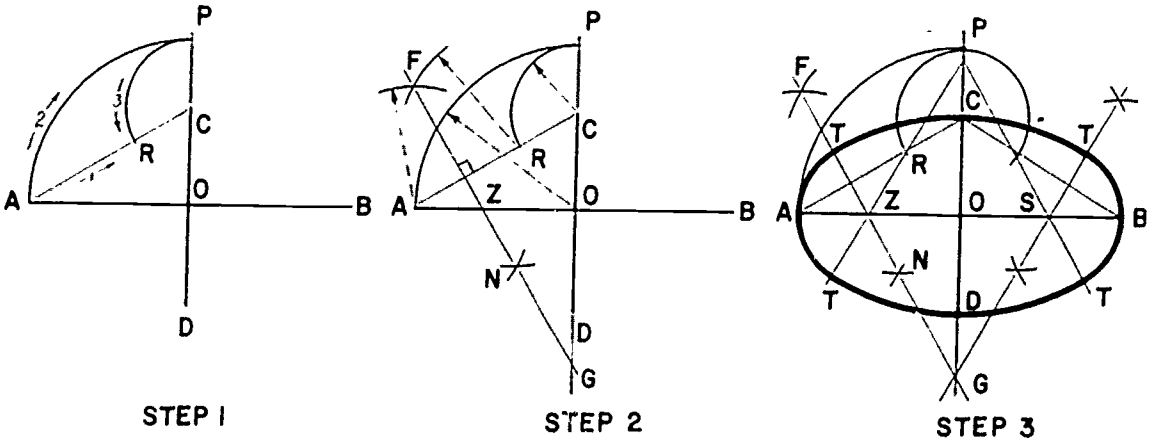

c. Concentric circle method

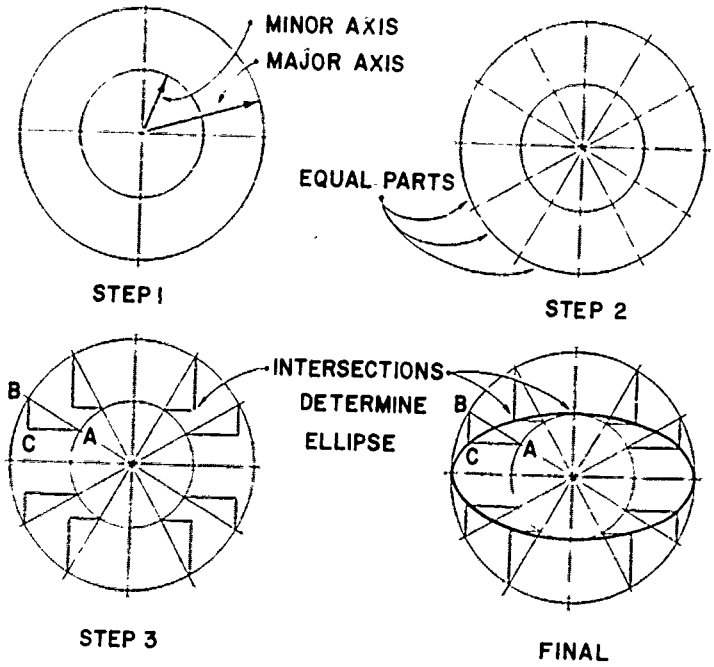

d. Parallelogram method

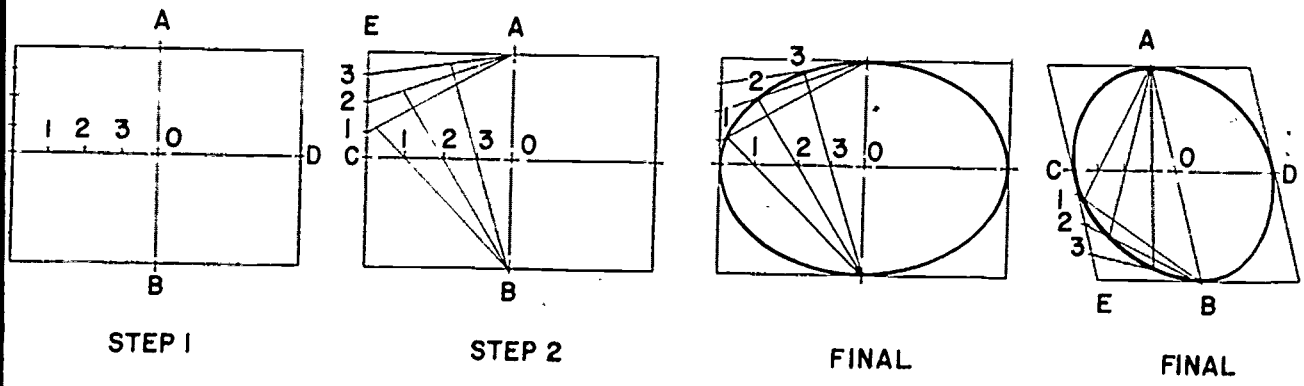

e. Slantz method

(1) Given the major and minor axes, and taking the length of the minor axis as a radius and assuming the end of the major axis to be the radius center, strike an arc which crosses the major axis.
(2) Divide the remaining distance on the major axis into three equal parts.
(3) Starting at the origin, locate the length of two of these equal parts in both directions along the major axis. These are the radius centers of two of the elliptical arcs.
(4) Draw 60° diagonals through these established radius centers until they cross extensions of the minor axis. This establishes the other two radius centers.
(5) Complete the figure.

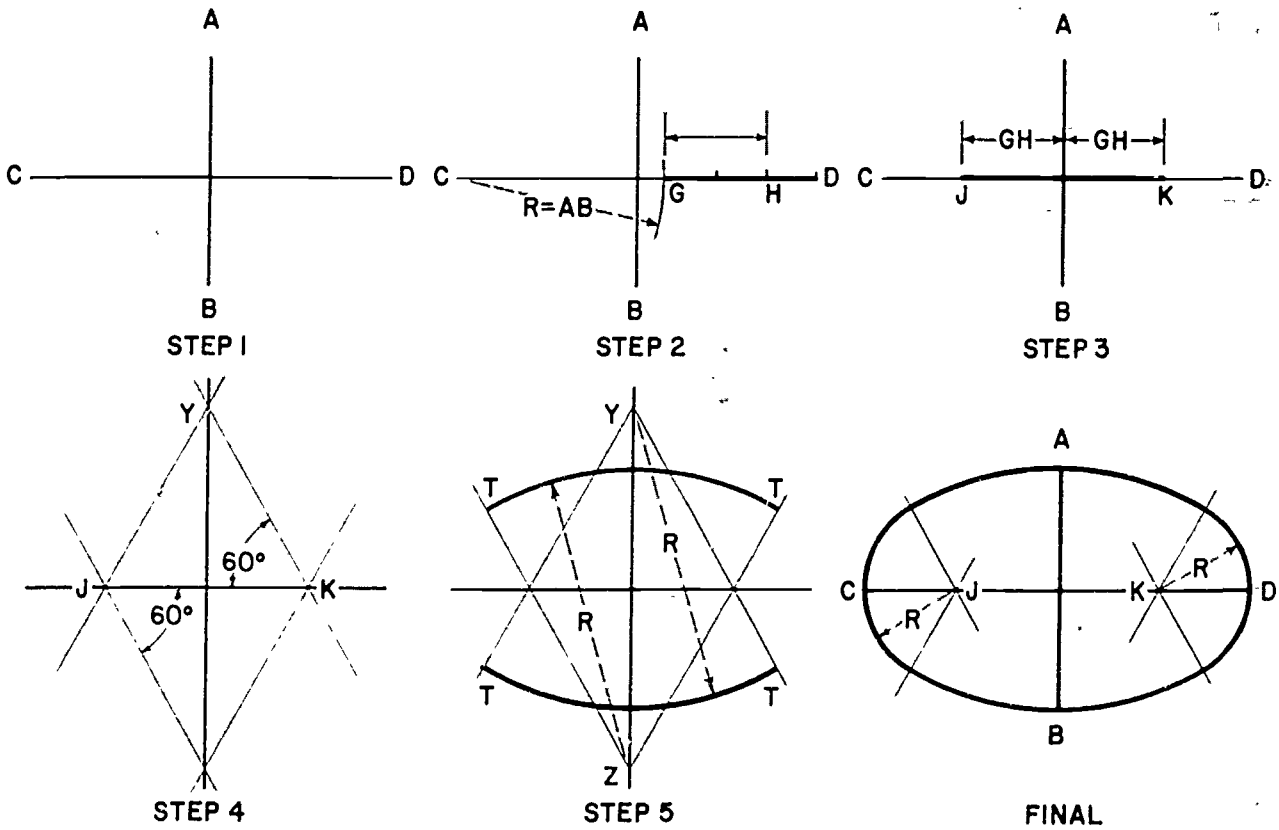

CHECK YOUR PRACTICE DRAWINGS FOR ACCURACY OF CONSTRUCTION AND PROCEED TO NEXT LESSON.

Lesson 8: Parabola

Performance Objective: Given the rise and span or the focus and directrix, draw a parabola by methods of geometrical construction.

Learning Activities:

A. Read Technical Drawing, Giesecke, et al., section 4.59; Engineering Drawing, Zozzora, sections 5-34, 5-35, 5-36, 5-37; Engineering Drawing and Design, Jensen, pages 42 & 43.

B. Read the following informational content:

1. A parabola is a conic section produced by an oblique plane intersecting a right circular cone and passing through the base.

2. The perpendicular distance from the directrix to the parabola is equal to the direct distance to the focus.

C. Perform the following operations:

1. Given the rise and span of a parabola, find the focus and directrix.

a. Using dividers, locate point A on the axis of symmetry.
b. Draw a line from point A to point P on the span.
c. Bisect this line.
d. The intersection of the bisector with the axis locates the focus.
e. The directrix is a line perpendicular to the axis at a distance from the apex equal to the distance from the apex to the focus.

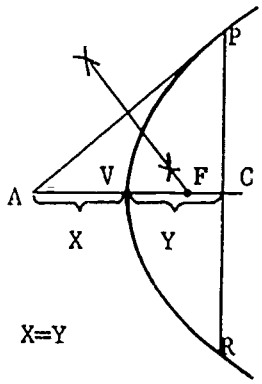

NOTE: The parabolic shape is used as reflecting surfaces for light and sound, for vertical curves in highways, for forms of arches, and as approximate curves of cables for suspension bridges. It is also used to show the bending moment at any point on a uniformly loaded beam or girder.

2. Given a rise of 2" and a span of 5", draw a parabola by taking 1/2 the span, squaring it and assuming this to be the number of divisions on the rise. The corresponding intersections will generate a parabola.

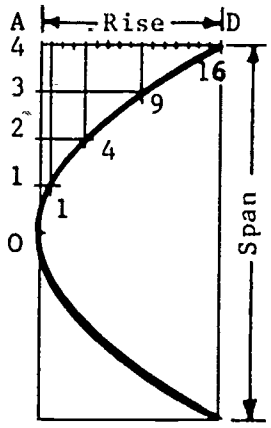

3. The distance from the directrix to the focus along the axis is 4". Draw a parabola.

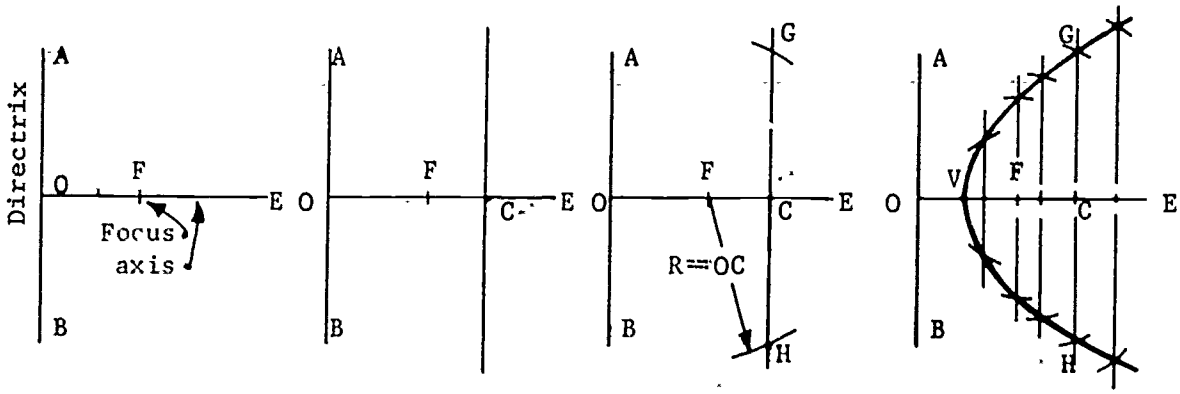

GIVEN STEP 1 STEP 2 FINAL

a. Step off any distance o.c. along the axis of symmetry starting from the directrix. Draw a line perpendicular to the axis through this point.
b. Using the distance o.c., (step a), as a radius and the focus as a radius center, strike arcs that intersect the perpendicular line. These intersections will be two points on the parabola.
c. Repeat steps a & b until enough points have been located to accurately describe the parabola.
d. Using the irregular curve, complete the shape.

Performance Criterion Tests for Geometric Construction

The following job assignments will evaluate your skills in applying the techniques as outlined in the total block. Complete the assigned drawings and hand in for evaluation.

REFERENCE TEXT	ASSIGNMENT	RATING
Engineering Drawing	Fig. 5-11 5-14 5-20 5-21	
Technical Drawing	Fig. 4-68 4-69 4-71 4-48 4-79	
Other assigned text		

If you received a rating of 8.5 or above as an assignment average, proceed to the next lesson. If your average was less than 8.5, review your errors and complete the following assignments. (Redo any drawings with scores less than 6.5.)

REFERENCE TEXT	ASSIGNMENT	RATING
Engineering Drawing	Fig. 5-12 5-13 5-15 5-16	
Technical Drawing	Fig. 4-70 4-72 4-74 4-75	
Other assigned text		

SEE INSTRUCTOR BEFORE PROCEEDING TO NEXT BLOCK ASSIGNMENT.

BLOCK 3 MULTIVIEW PROJECTION

BASIC DRAFTING STUDENT MANUAL

GENERAL OBJECTIVES FOR BLOCK 3

1. Describe and compare first angle and third angle projection.

2. Define the characteristics of lines and planes as they relate to orthographic projection.

3. Apply the principles of orthographic projection to show the size and shape of an object by performing the following competencies:

   --Identify missing lines from views
   --Project missing views from drawings
   --Construct multi-view drawings from pictorial drawing

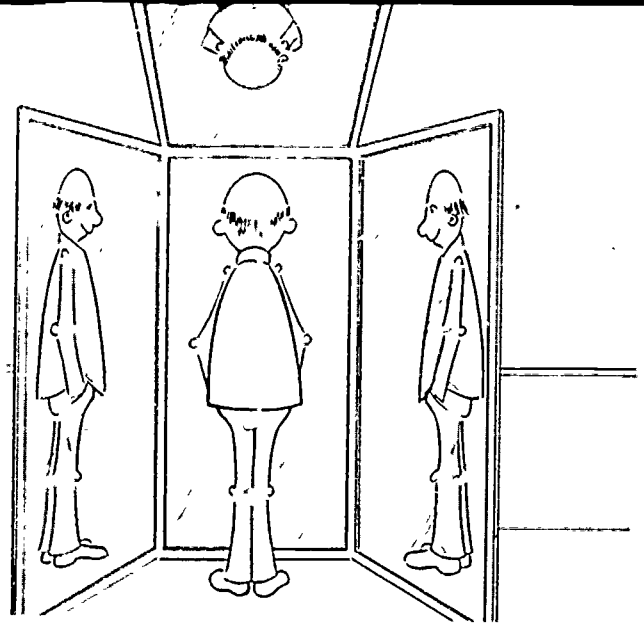

Directions for Use of Block 3 of the Basic Drafting Student Manual

This block is designed for student use in individualized programmed instruction. It will permit you to advance through the course at as rapid a rate of progress as possible. The manual includes learning materials and specific assignments which you are to perform to the satisfaction of the instructor.

On this sheet, you will find a competency pretest. If you have had previous exposure to any of the information outlined in the general objectives on the cover page for this block, perform the pretests and submit the solutions to your instructor. If you have had no exposure to this phase of drafting, proceed to the section marked "Lesson 1" and work through the outlined learning activities.

Pretest for Block 3

Answer each of the following questions with one of the words: "Normal," "Inclined," or "Oblique."

1. An edge that is parallel to one picture plane but inclined to the two adjacent picture planes is _____.
2. A surface which is parallel to a picture plane is _____.
3. A surface which does not appear true size in any view is _____.
4. An edge which is perpendicular to a picture plane is _____.
5. An edge which appears as a point in one view is _____.
6. A line which is foreshortened in all views is _____.

7. A line which is foreshortened in two views but shown true size in the other views is _____.

8. A surface which appears as a foreshortened area in top views but is perpendicular to the picture plane of the rightside view is _____.

9. A surface which appears as a foreshortened area in all three views is _____.

10. An edge which appears as a point in one view and appears true length in adjacent views is _____.

11. Draw as many views as needed to completely describe the object in the assignments below. Do not dimension.

TEXT	Assignment	Rating
Engineering Drawing	Fig. 7-21	
Technical Drawing	Fig. 6-119	
Engineering Drawing & Design	Fig. 7.21	
Instructor's assigned drawing		

SEE INSTRUCTOR FOR NEXT ASSIGNMENT.

Lesson 1 : Concepts and Techniques

Performance Objective: Given specific interaction topics relating to orthographic projections, describe the concept and relate it to present needs and practices.

Learning Activities:

A. Read Technical Drawing, Giesecke et al., Chapter 6; Engineering Drawing, Zozzora, Chapter 2; Engineering Drawing and Design, Jensen, Chapter 4.

B. Read the following informational outline:

1. In orthographic projection, the object is assumed to be viewed from an infinite distance.

   a. Lines of sight are parallel to each other.
   b. Lines of sight are prependicular to the picture planes.

Lines of sight are perpendicular

Position of viewer is assumed to be at infinity.

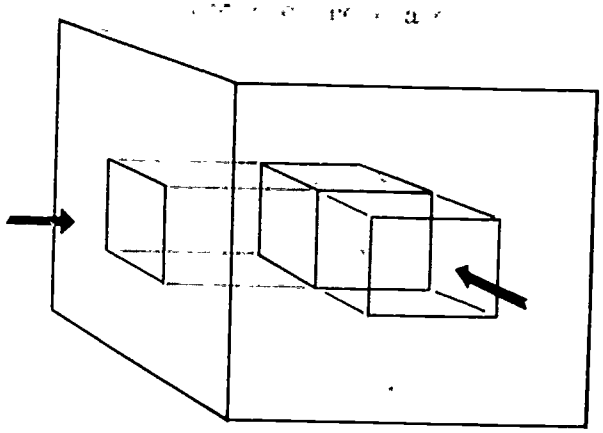

OBJECT IS PARALLEL TO PICTURE PLANE

2. In the United States, third-angle projection is the accepted American Standard.

   a. The object is assumed placed in the third quadrant.
   b. The plane of projection is always between the viewer and the object.
   c. First-angle projection is the European standard.

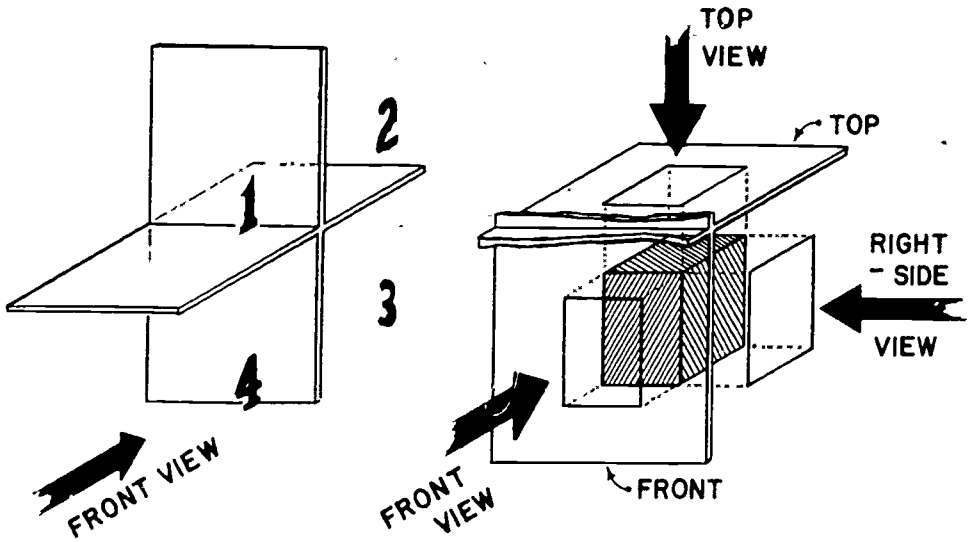

THE FOUR QUADRANTS *THIRD-ANGLE PROJECTION*

3. Planes of Projection

   a. Frontal plane

      (1) A plane that is perpendicular to the viewer's line of sight.
      (2) Usually assumed to be the view most descriptive of the shape of the object.
      (3) The projected view is called the front view.

   b. Profile plane

      (1) Vertical projection planes that are passed on each side of the object.
      (2) The projected views are called right or left side views.

c. Horizontal plane

(1) A plane that is oriented horizontally and passed above the object.
(2) The projected view is called the top view.

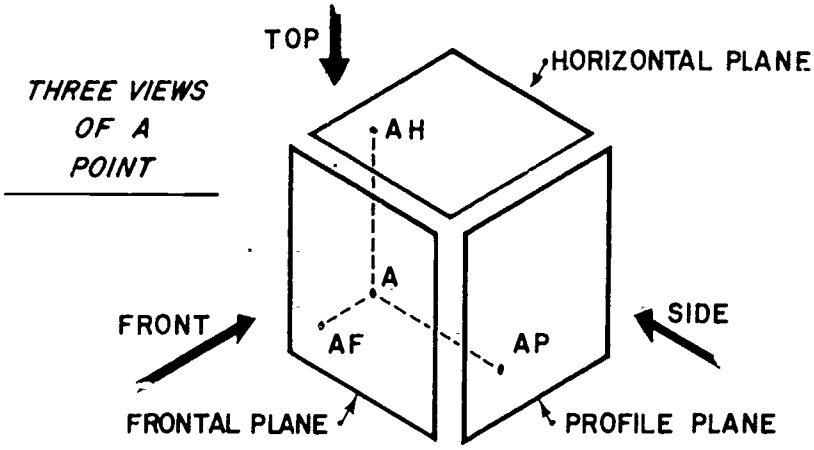

d. The folding line is the line in the picture plane which corresponds to the edge formed by the intersection of planes of projection.

4. Relationship Between the Views and the Object

a. The front view contains the width and height dimensions.

THE FRONTAL PLANE

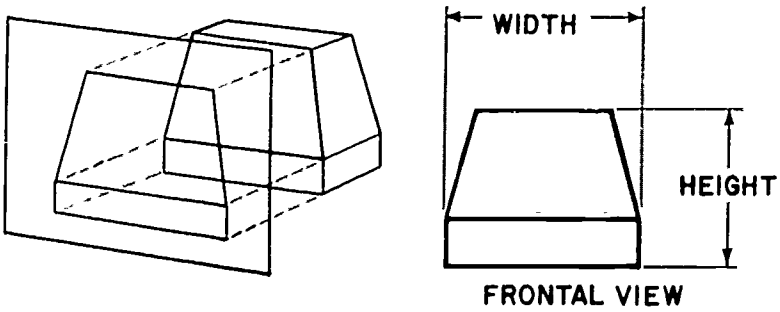

b. The top view contains the width and depth dimensions.

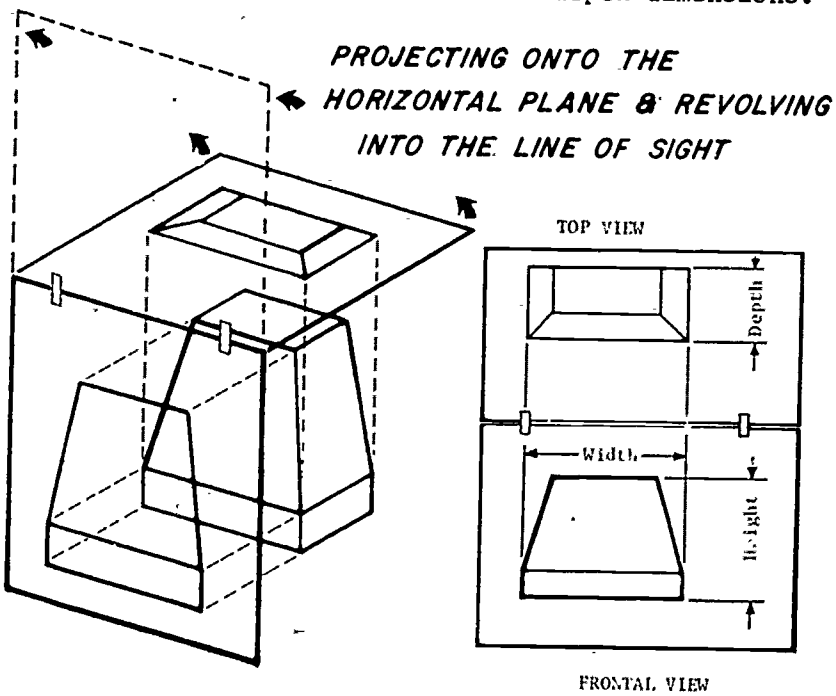

c. The side views contain the height and depth dimensions.

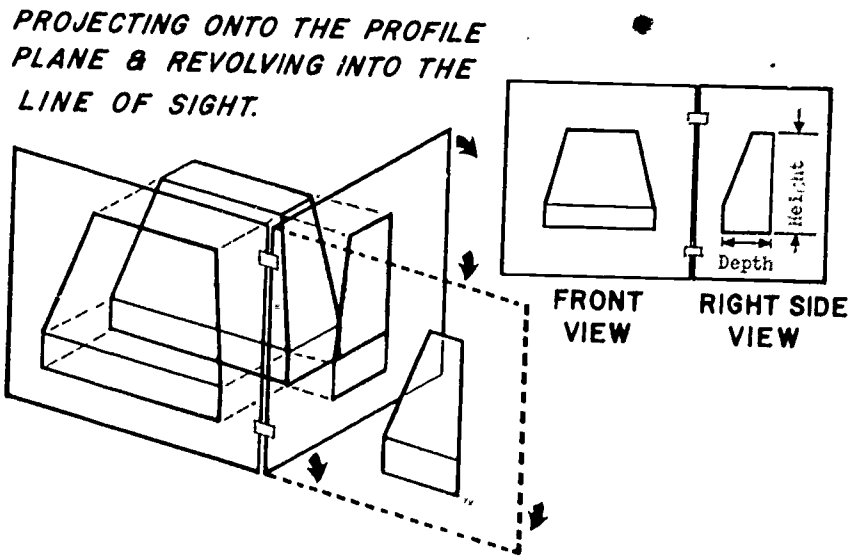

d. All views may be assumed to be projections onto the sides of a glass box that has been opened so that all sides are in the same plane as the frontal plane (the plane of the paper).

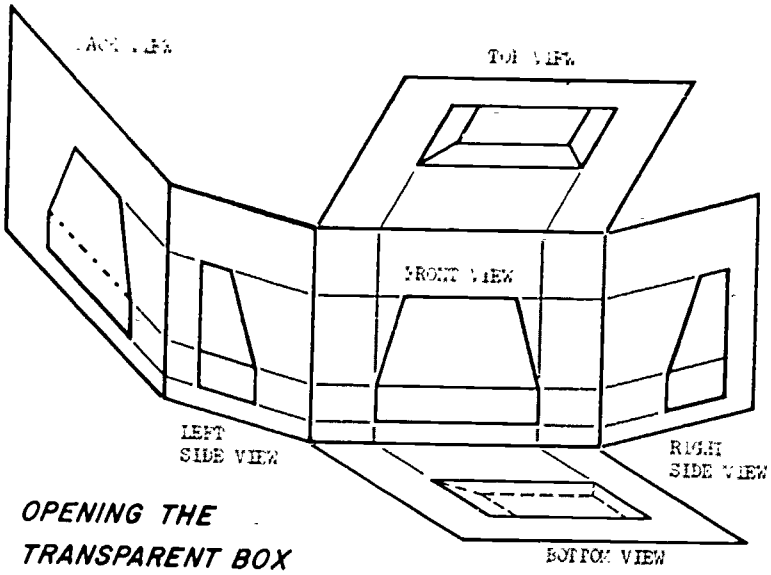

OPENING THE TRANSPARENT BOX

THE TRANSPARENT BOX OPENED

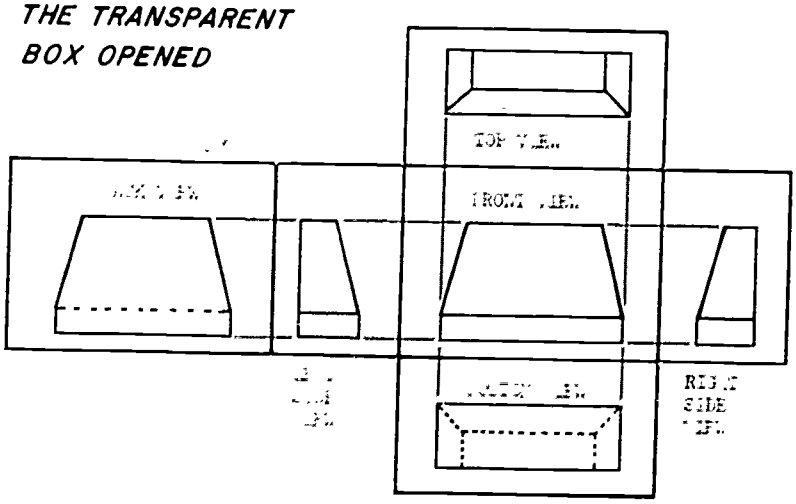

e. The principle planes of projections are the front, top and right side.

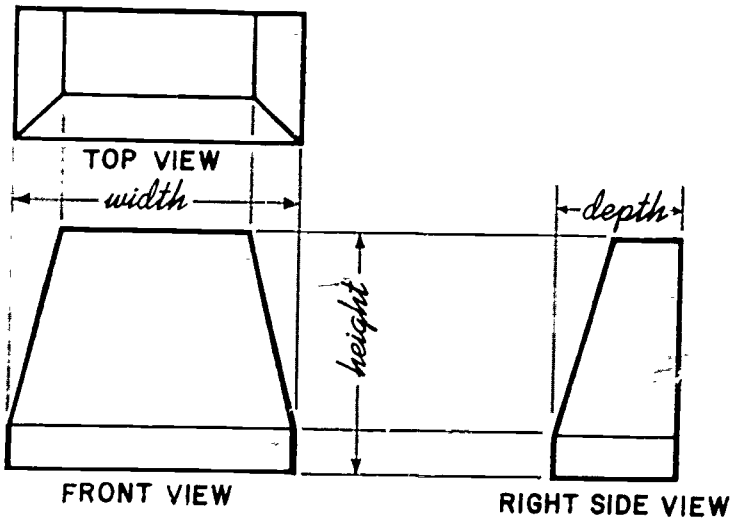

5. Analysis of Lines and Planes

a. Definitions

(1) Plane - a two-dimensional, flat surface
(2) Line - an edge view of a linear dimension that is formed by the intersection of two planes
(3) Point - the end view of a line created by projection onto a perpendicular picture plane
(4) Inclined plane - a surface that is perpendicular to one of the principle planes of projections and inclined to the other two planes
(5) Inclined line - a line that is parallel to one of the principle planes of projection and inclined to the other two planes

(6) Oblique plane - a surface that is neither parallel nor perpendicular to any of the planes of projection
(7) Oblique line - a line that is neither parallel nor perpendicular to any of the planes of projection
(8) Normal surfaces - plane surface that is parallel to a plane of projection

b. Characteristics

(1) Inclined planes

--Will appear as a true length line on the plane to which it is perpendicular
--Will appear as foreshortened surfaces on the other two planes

NOTE: The amount of foreshortening is influenced by the degree of the inclination. The larger the angle the greater the foreshortening of the surface.

--Cannot be shown as a true size surface in orthographic projection

NOTE: An auxiliary view will show a true size and shape.

(2) Inclined line

--Will appear as a true length line on the plane to which it is parallel
--Will appear as foreshortened lines on the other two planes

NOTE: The amount of foreshortening is influenced by the degree of the inclination. The larger the angle the greater the foreshortening of the surface

--Will not appear as a point in any view other than an auxiliary view

(3) Oblique plane

--Will not appear as a line in any plane of projection
--Will appear as a foreshortened surface in all views

(4) Oblique line

--Will not appear as a point in any view
--Will appear foreshortened and inclined in every view

C. Criterion Test

1. Identify the following: plane of projection, oblique, projectors, profile plane.

2. In which view will a depth dimension not be found?

3. Why might a line appear foreshortened in a view?

4. Why, in orthographic projection, is the viewer assumed to be at infinity?

5. Why might one surface appear to be more foreshortened than another, even though they were the same size and shape?

6. Identify the shape of a line that is perpendicular to the plane of projections.

7. In which view will the true size and shape of a plane be shown.

8. Identify all lines and planes in the following drawing and determine whether they are normal, inclined, or oblique.

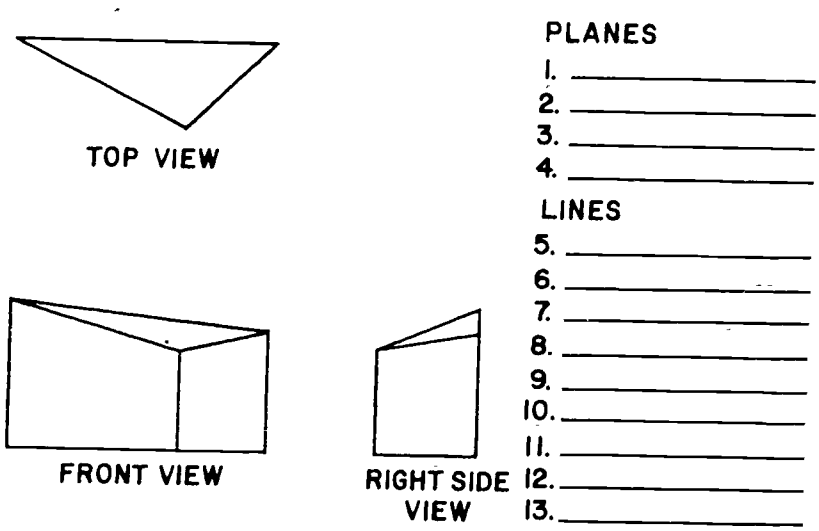

IF, AFTER COMPLETION OF THE CRITERION TEST, THE INSTRUCTOR ASSIGNS NO ADDITIONAL TEST QUESTIONS, PROCEED TO THE NEXT LESSON.

Lesson 2: Applications

Performance Objective: Given necessary specifications for objects, construct orthographic projections according to the methods outlined.

Learning Activities:

A. Read Technical Drawing, Giesecke et al., Chapter 6; Engineering Drawing, Zozzora, Chapter 2; Engineering Drawing and Design, Jensen, Chapter 4.

B. Read the following informational outline:

1. The method of projection may be used where duplicity of dimensions occurs in different views. This can be a time-saving device.

2. In laying out the views in orthographic projection, consideration should be given to proper spacing and proportions for a good visual relationship between solids and voids.

   a. The visual center is not necessarily the actual center.
   b. The title block must be considered in the total sheet composition.

C. Practice the following operational steps:

1. Finding the Actual Center

   a. Horizontally

      (1) Determine the amount of working space between the border lines.
      (2) Add dimensions.

         --Width of front view
         --Space between views
         --Depth of right side view

      (3) Subtract the total dimensions from the total working space.
      (4) Divide the remainder by two.
      (5) Answer is the distance from the border line to the outer edge of each view.

   b. Vertically

      (1) Determine the amount of working space between the border lines.

(2) Add dimensions.

--Height of front view
--Space between views
--Depth of top view

(3) Subtract the total dimensions from the total working space.
(4) Divide the remainder by two.
(5) Answer is the distance from the border line at the top and bottom to the edge of each view.

2. Methods of Projection Involving the Three Principle Views

a. Construct the front view.

(1) Start the left, bottom corner according to centering dimensions.
(2) Use the dimensions from the actual object and draw the front view using a specified scale.

b. Construct the top view.

(1) Project lines vertically from front view to determine the width of the object in the top view.
(2) Use the dimensions from the actual object and scale the depth dimensions in the location determined by the centering procedure.

c. Construct the right side view.

(1) Project lines horizontally from the front view to determine the height of the object in the right (or left) side view.
(2) Transfer the depth dimensions.

--Scale
--Dividers
--Mitre line

-Draw an horizontal line from the bottom edge of the top view.
-Determine the distance between the front and right side view, according to the centering procedure, and draw a vertical line.
-Draw a 45° line starting at the intersection of the above two lines.
-Project depth dimensions from the top view to the mitre line and then to the missing view.

-Mitre line causes line to be projected at a 90° angle thereby transferring depth dimensions from the top view to the right side view.

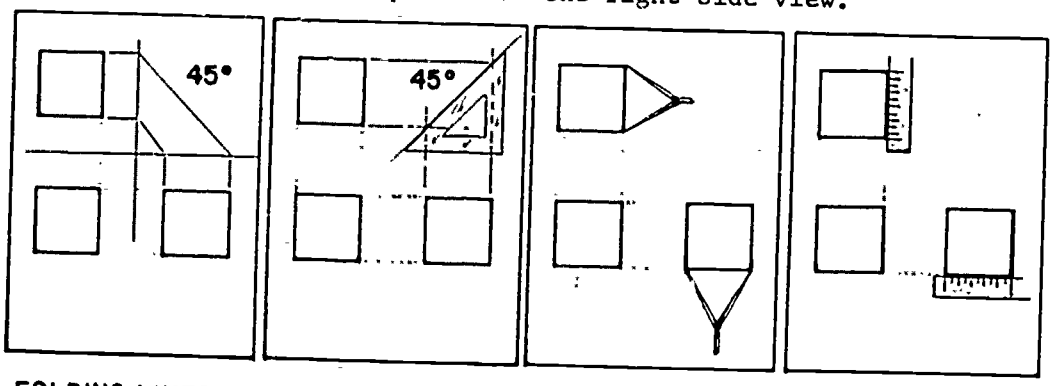

FOLDING LINES MITRE LINES DIVIDERS SCALE

D. Performance Criterion Test

The following job assignments will evaluate your skills in applying the techniques as outlined in the total block. Complete the assigned drawings and hand in for evaluation. Do not dimension.

REFERENCE TEXT	ASSIGNMENTS	RATING
Technical Drawing	Fig. 6-50, 5 6-51, 2 6-51, 6 6-51, 8 6-52, 3 6-52, 4 6-52, 6 6-52, 8	
Engineering Drawing (select 8 exercises from -	Figures 2-6 thru 2-25) Fig. 2-46 2-49 2-53	
Engineering Drawing and Design	Fig. 4.18, 2 4.18, 5 4.18, 7 4.18, 10 4.21, 8 4.21, 10 4.22, 21 4.22, 22	
Other Assigned Text		

If you received a rating of 9.0 or above as an assignment average, proceed to the next lesson. If your average was less than 9.0, see your instructor for additional assignments. (Redo any plates with scores of less than 7.0.)

REFERENCE TEXT	ASSIGNMENT	RATING

BLOCK 4 DIMENSIONING

BASIC DRAFTING STUDENT MANUAL

GENERAL OBJECTIVES FOR BLOCK 4

1. Define the terms and symbols used for dimensioning.

2. Analyze specific jobs and determine the proper location for dimensions that will be best suited to the description of the object.

3. Demonstrate the proper application of dimensioning techniques by completing exercises to the accepted standards.

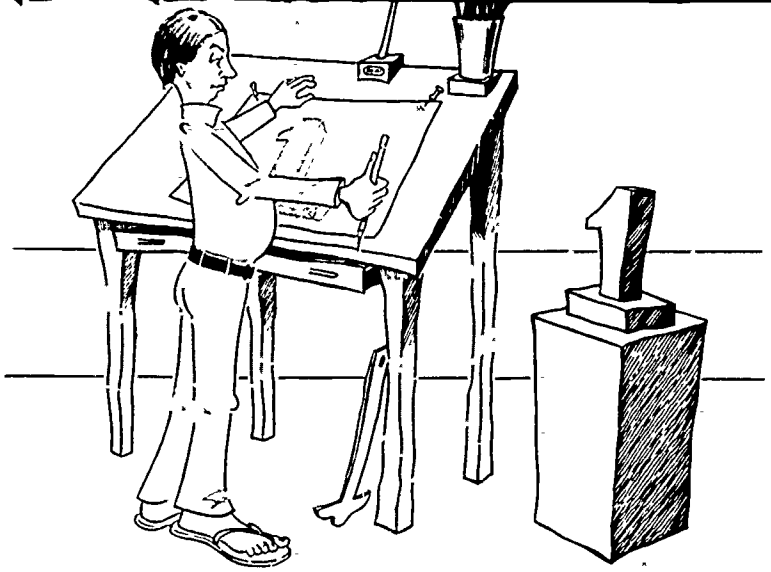

Directions for Use of Block 4 of the Basic Drafting Student Manual

On this sheet, you will find a competency pretest. If you have had previous exposure to any of the information outlined in the general objectives on the cover page for this block, perform the pretests and submit the solutions to your instructor. If you have had no exposure to this phase of drafting, proceed to the section marked "Lesson 1" and work through the outlined learning activities.

Pretest for Block 4

1. Describe the differences between aligned and unidirectional dimensioning.

2. What is the size of the gap between the extension line and the object?

3. How far past the dimension line does the extension line extend?

4. When may dimensions be placed outside the extension lines?

5. What is the direction of a leader when used to dimension a circle?

6. Which line may sometimes also serve the function of an extension line?

7. Where are general notes usually placed?

3. Draw as many views as needed to completely describe the object in the assignments below. Dimension completely.

REFERENCE TEXT	ASSIGNMENT	RATING
Technical Drawing	Fig. 6-117	
Engineering Drawing	Fig. 7-44	
Engineering Drawing & Design	Fig. 7.23	
Instructor's assigned text.		

Lesson 1: Concepts and Techniques

Performance Objective: Given specific interaction topics relating to dimensioning techniques, describe the concepts and relate them to present needs and practices.

Learning Activities:

A. Read Technical Drawing, Giesecke et al., Chapter 11; Engineering Drawing and Design, Jensen, Chapter 5; Engineering Drawing, Zozzora, Chapter 7; Instructor's text.

B. Read the following informational outline:

1. Historical Notes

   a. In biblical times, a cubit was the length of a man's forearm - about 18 inches (Noah's ark was 300 cubits long, 50 cubits wide and 30 cubits high. Genesis 6:15)
   b. An inch used to be the width of a thumb, but in old England it was "three barley corns, round and dry." A foot was simply the length of a man's foot.
   c. England established the yard as a standard unit of measure in 1824, and France adopted the meter during the time of Napoleon.

2. Symbols

   a. Linear

      (1) ' = feet
      (2) " = inches

   b. Angular

      (1) ° = degrees
      (2) ' = minutes
      (3) " = seconds

3. Dimensioning Fundamentals

   a. Lines (Refer to Block 1 for relative line weights.)

      (1) Extension line

         --a fine, dark line that denotes the termination point of the dimension line
         --starts 1/16" from the object
         --extends 1/8" beyond dimension lines
         --may cross object lines
         --may not cross dimension lines

(2) Dimension line

--a fine, dark line terminated by arrowheads
--denotes the direction and extent of the dimension as it relates to the object
--the first dimension line is placed at least 3/8" from the object
--successive dimension lines 1/4" apart
--may not cross extension lines
--in machine drawing, a break is left in the line so that the dimension may be inserted
--in architectural drawing, the dimension line is solid and the dimension is placed above the line

(3) Center line

--alternate long and short dashes
--locates axes of symmetrical parts and denotes centers
--may be used as extension line wherever applicable

(4) Leader

--a solid line that leads from a note and is terminated with an arrowhead
--directed toward a specific part of the object
--when used with reference to an arc or circle, should be drawn so that an extension of the line would pass through the radius center

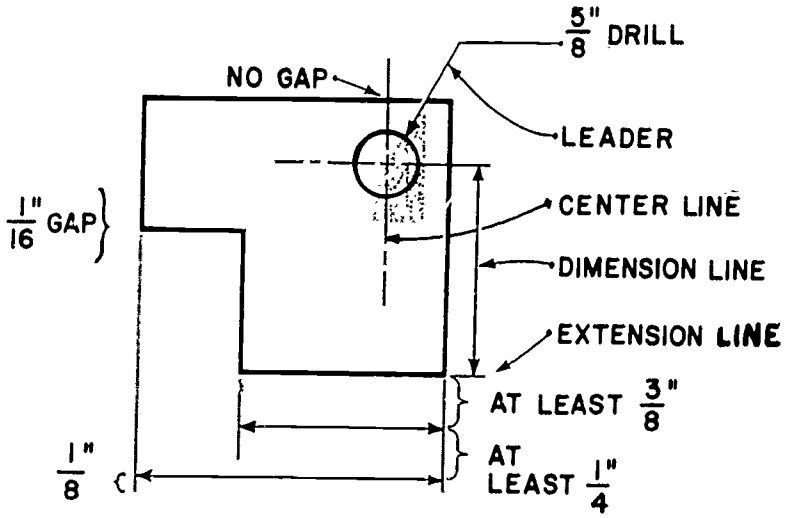

4. Placement of Dimensions

a. Systems

(1) Aligned system

--all dimensions are placed parallel with the dimension lines
--dimensions should be oriented for reading relative to the bottom and the right side of the drawing

(2) Unidirectional system

--all dimensions are oriented parallel to the bottom of the sheet

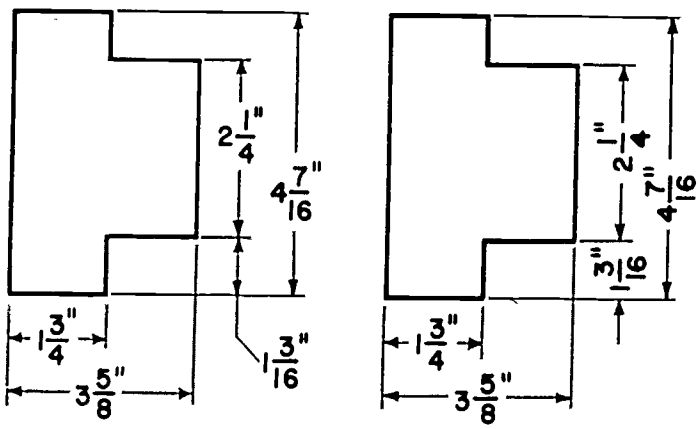

UNIDIRECTIONAL SYSTEM ALIGNED SYSTEM

b. Basic rules

(1) Short dimensions should be placed nearest the object.
(2) Line up and group detail dimensions wherever possible.

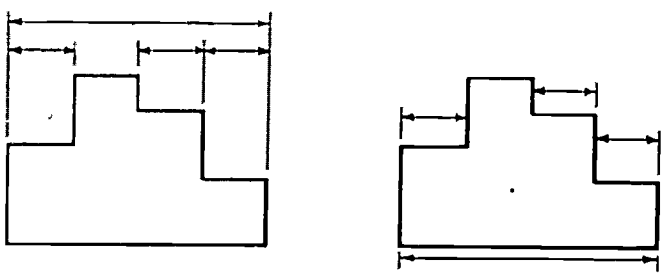

CORRECT INCORRECT

GROUPED DIMENSIONS

(3) Dimensions should be aligned parallel to the edge of the object.
(4) Dimensions should not be placed on objects unless absolutely necessary.
(5) Dimension lines should never coincide with or form a continuation of object lines.
(6) Avoid dimensioning to hidden lines wherever possible.
(7) Dimensions should be shown on the view that is most indicative of the shape of the object.
(8) Dimensions applying to adjacent parts should be placed between views.
(9) Do not connect extension lines between two views.
(10) Dimensions may be placed outside of extension lines wherever space is limited.
(11) Stagger numerals wherever a group of paralleled dimensions occur.

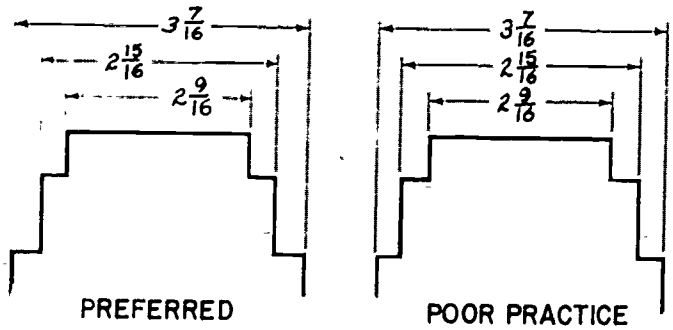

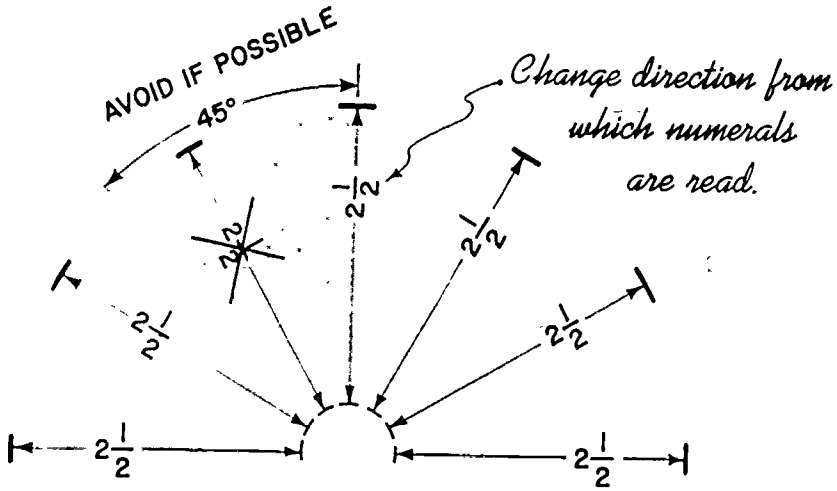

CORRECT DIRECTIONS OF DIMENSIONS.

c. Arcs, angles and circles

(1) Holes and circular center lines, arc dimensional by diameter

--centerlines should never be used as dimension lines
--abbreviations DIA means diameter

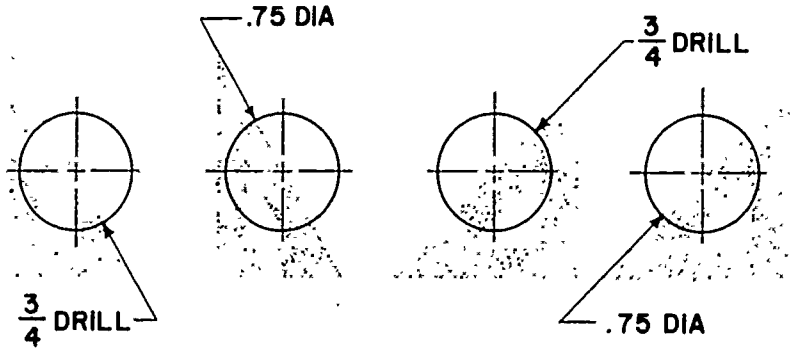

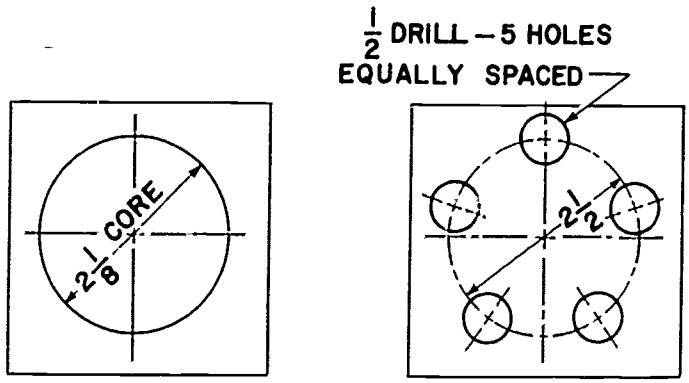

(2) Cylinders should be dimensioned in the rectangular views.
(3) Arcs should be dimensioned by the radius.

--a small plus sign indicates the center
--dimension on the view where the arc appears
--false centers may be utilized where required

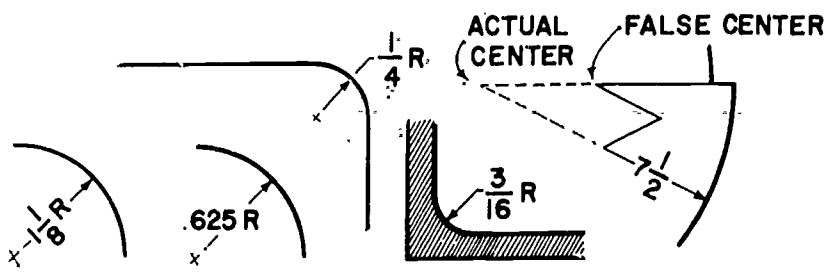

(4) Curves may be dimensioned by using varying centers or coordinate dimensions referred to datums may be used.

(5) Angles may be dimensioned by a coordinate method for high precision work.

--the more common method is to give a linear dimension and the angle in degrees
--the degrees may be placed inside or outside of the angle, according to the space allottment

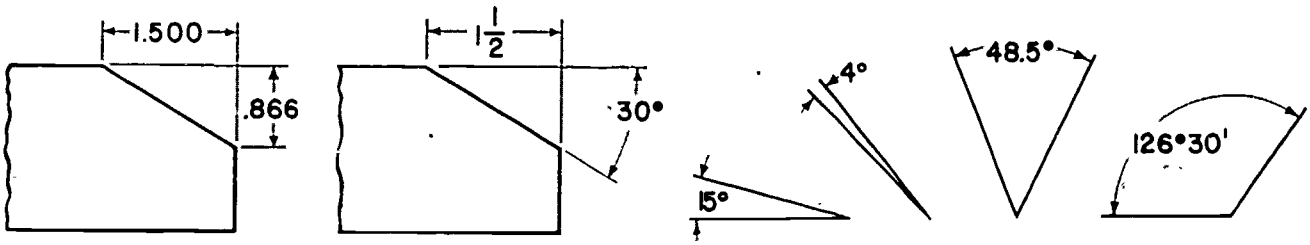

5. Notes

a. All notes should always be lettered horizontally on the sheet and designed into the total composition for a well proportioned sheet or detail.
b. General notes apply to the entire drawing.

(1) Usually located in the lower right hand corner of the drawing
(2) May be designed into the title block

c. Local notes refer to specific details.

(1) Leader line indicates the point of reference and is initiated from in front of the first word or after the last word.
(2) Notes should be one of the final dimensioning steps.

6. Special Marks

<u>Note</u>: This is simply an introduction to the identification of symbols. An in-depth study will be made later in advanced drafting.

a. A finish mark is used to indicate a machined surface as opposed to a rough casting. Two styles are approved by the ASA.

(1) ⊀ symbol
(2) V symbol

b. If a part is to be finished all over, indicate FAO and omit finish marks.
c. The finish mark is shown only on the edge view.
d. If the machining operation that is specified with produce the finish desired, omit the finish mark.

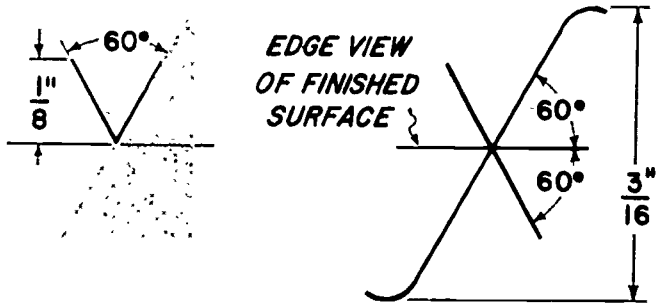

e. Surface quality symbols are used when a simple finish mark is not adequate to achieve the specified standards.

(1) Used to define roughness, wariness and lay

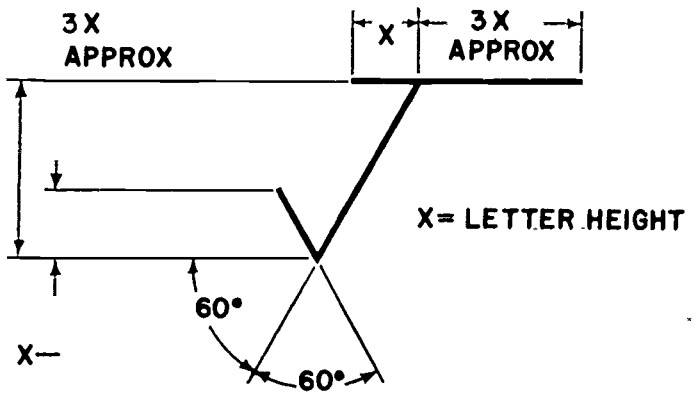

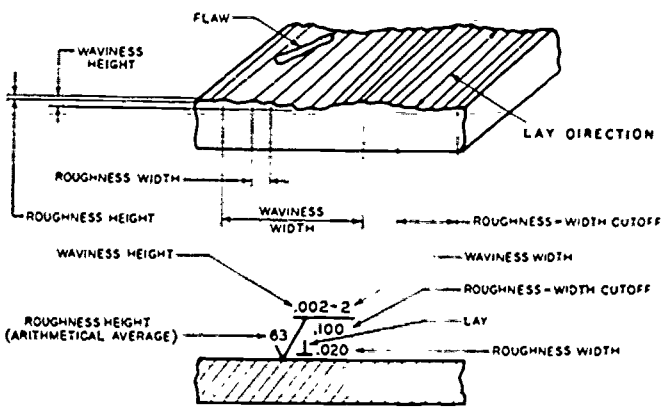

f. A symbol is used to show welding representation.

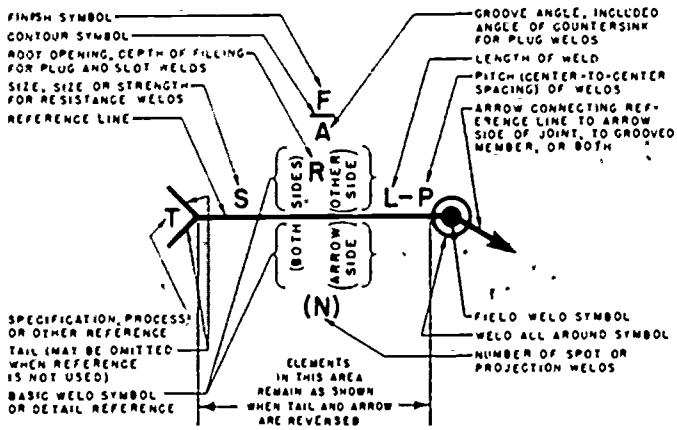

C. Criterion Test

1. What is the size of the gap between the extension line and the object? Why is it there?

2. When is a dimension placed outside of the extension line?

3. In an aligned system of dimensioning, how are dimensions placed?

4. How does an arc relate to a circle, and how are both dimensioned?

5. What is meant by datum?

6. How is a cylinder dimensional?

7. What is the difference between a finish mark and a control surface symbol?

8. In which view does the finish mark occur?

Lesson 2: Applications

Performance Objective: Given the specifications for a simple object, draw as many views as needed to completely describe the object and dimension completely.

Learning Activities:

A. Read Technical Drawing, Giesecke et al., Chapter 11; Engineering Drawing and Design, Jensen, Chapter 5; Engineering Drawing, Zozzora, Chapter 7; Instructor's text.

B. Practice the following operational steps:

1. Study the project to be drawn and determine which views best illustrate the object.

2. Locate the visual center of the sheet considering the total composition.

3. Draw the principle views required, according to the techniques as outlined in the block on Multiview Projection.

4. Dimension drawing completely.

   a. Lightly rough in all extension lines and dimension lines.
   b. Insert all dimensions, staggering numerals wherever applicable.
   c. Darken in all extension lines and dimension lines according to the accepted standards.
   d. Draw arrowheads.
   e. Add special marks.
   f. Add specific notes and draw in leaders with arrowheads.
   g. Label all views and provide a scale.
   h. Add general notes.

C. Performance Criterion Test for Dimensioning

The following job assignments will evaluate your skills in applying the techniques of dimensioning as outlined in the total block. Complete the assigned drawings and hand in for evaluation.

REFERENCE TEXT	ASSIGNMENT	RATING
Technical Drawing	Fig. 6-53 6-65 6-72 6-83 6-110	
Engineering Drawing	Fig. 7-2 7-9 7-13 7-21 7-46	
Instructor's Text		

If you received a rating of 9.0 or above as an assignment average, proceed to the next lesson. If your average was less than 9.0, review your errors and see the instructor for any additional assignments. (Redo any drawing with scores less than 6.5)

BLOCK 5 SECTIONING

BASIC DRAFTING STUDENT MANUAL

GENERAL OBJECTIVES FOR BLOCK 5

1. Identify all of the graphic elements used in drawing sectional views.

2. Describe and categorize the various types of sectioning techniques.

3. Select the sectioning techniques which will be best applied to specific jobs.

4. Apply the principles of sectioning to show interior features of objects that would not otherwise be shown in orthographic views.

8. Draw as many views as needed to completely describe the object in the assignments below. Section wherever needed. Dimension completely.

REFERENCE TEXT	ASSIGNMENT	RATING
Technical Drawing	Fig. 7-65	
Engineering Drawing	Fig. 8-9	
Engineering Drawing & Design	Fig. 6.60	
Instructor's Text		

SEE INSTRUCTOR FOR NEXT ASSIGNMENT.

Lesson 1: Concepts and Techniques

Performance Objective: Given specific interaction topics relating to sectioning techniques, describe the concepts and relate them to present needs and practices.

Learning Activities:

A. Read Technical Drawing, Giesecke et al., Chapter 7; Engineering Drawing, French and Vierck, Chapter 8; Engineering Drawing, Zozzora, Chapter 8; Engineering Drawing and Design, Jensen, Chapter 6; Instructor's text.

B. Read the following informational outline:

1. Principles and Elements of Sectioning

a. A sectional view is one in which it is assumed that a portion of the object has been cut away and removed, thereby exposing interior elements.

(1) Required when hidden lines cannot clearly show complicated interiors

b. A cutting plane, shown on regular views, is an imaginary plane which identifies where the object is being cut.

(1) Theoretically passes completely through the object
(2) Identifies which portion of the object is to be shown as removed
(3) Arrowheads on the cutting plane line point the direction of sight

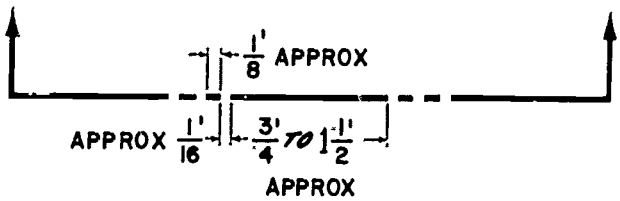

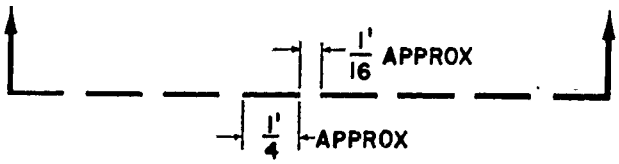

c. All visible edges which would normally be seen if looking at the object are shown.
d. Hidden lines are usually not shown.
e. Section lining or crosshatching occurs only on the portion of the object that has theoretically been cut.

(1) The materials used are differentiated by the use of symbols.

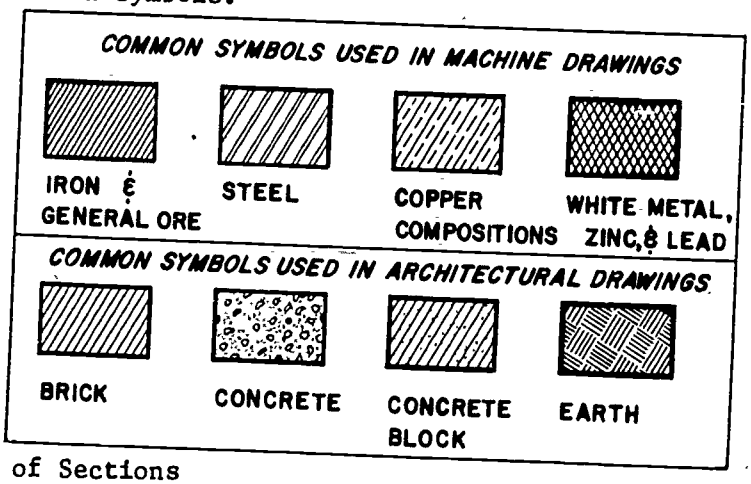

2. Types of Sections

a. Full sections are obtained by passing the cutting plane completely through the object.

(1) In symmetrical objects, one-half of the object would be assumed to be removed.

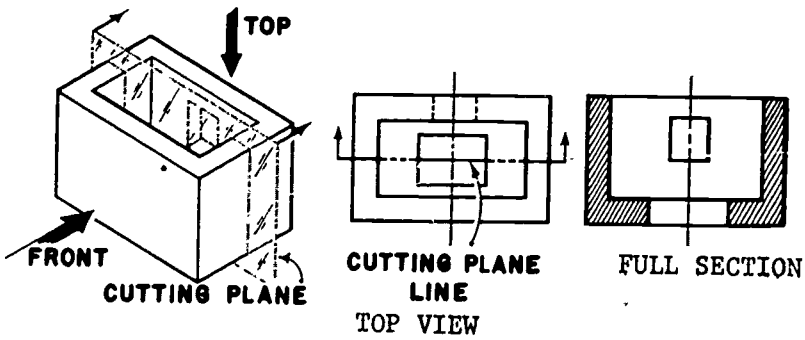

b. Half sections are obtained by passing the cutting plane halfway through the object.

(1) In symmetrical objects, one-fourth of the object would be assumed to be removed.
(2) Permits retention of the exterior appearance while exposing the interior details of an object.

(3) Greatest use occurs in assembly drawings.

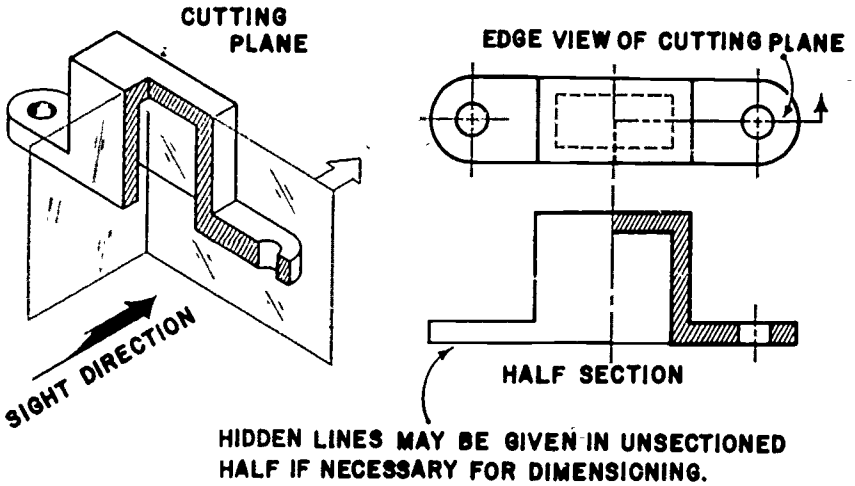

c. Offset sections are similar to full sections, except that the cutting plane does not travel in a straight line.

(1) The offsets in the cutting plane are always made at 90°.
(2) The offsets are never shown as a line on the section itself.

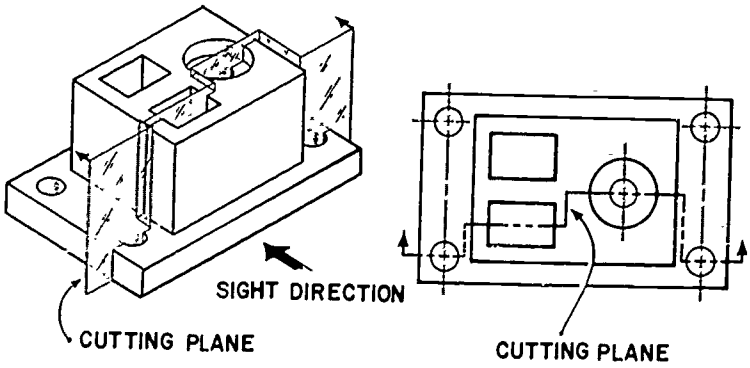

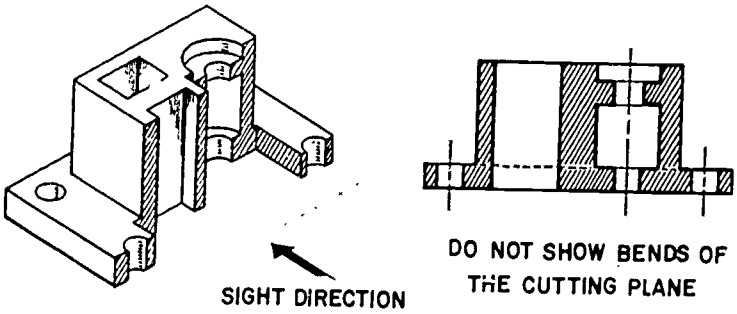

d. Broken-out sections are partial sections and are limited by a break line.

e. Revolved sections are drawn on the view where the section is taken.

(1) Revolved through 90°
(2) Symmetrical in shape about a center line which acts as the axis of rotation
(3) Object lines adjacent to the sections may appear broken-out if desired

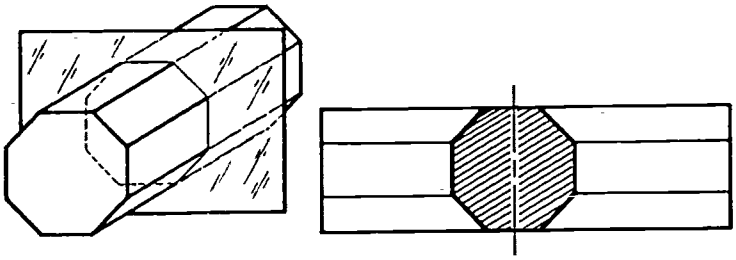

f. Removed sections are relocated from the normal position of projected views.

(1) Should be labeled

g. Aligned sections occur when features which are at angles with the picture plane are imagined rotated so that they are parallel with that plane.

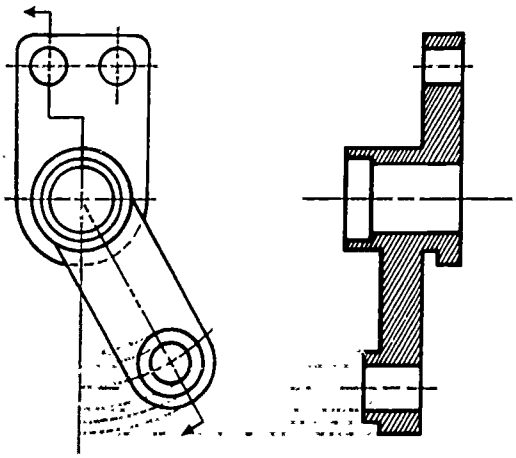

C. Criterion Test

1. Why is it sometimes necessary to use sectional views in drafting?

2. When would hidden lines be used in a sectional view?

3. Where is cross-hatching used on a section?

4. A line which shows where the object is being cut and the viewing direction is called:

   a. Section line
   b. Cross-hatch line
   c. Cutting plane line
   d. Cut-away line
   e. All of the above

5. In half-section, how much of the object is theoretically removed?

6. What is the major advantage of using a half-section?

7. Which two types of sections do not require a special view?

8. A revolved section is revolved through how many degrees?

9. In an offset section, the cutting plane line is always offset how many degrees?

10. When should an aligned section be used?

11. An aligned section is always revolved through 90°.
    True or False

Lesson 2: Applications

Performance Objective: Given the specifications for a simple object, describe the object graphically, section wherever needed, and dimension completely.

Learning Activities:

A. Read Technical Drawing, Giesecke et al., Chapter 7; Engineering Drawing, French & Vierck, Chapter 8; Engineering Drawing, Zozzora, Chapter 8; Engineering Drawing and Design, Jensen, Chapter 6; Instructor's Text.

B. Practice the following operational steps:

1. Study the object to be drawn and determine which views will best illustrate the object.

2. Determine the type or types of sectioning methods which will best serve to expose interior details.

3. Locate the visual center of the sheet, considering the total sheet composition.

4. Lightly rough in the principle views required, according to the techniques as outlined in the block on Multiview Projection.

5. Section drawing wherever needed.

   a. Draw in cutting plane lines to illustrate where section is being taken.
   b. Draw arrowheads to illustrate the viewing direction.
   c. Draw section to correspond to cutting plane.

      (1) Darken in all edges where material is theoretically cut through.
      (2) Show all interior details.
      (3) Add crosshatching for sectional clarity.
      (4) Add hidden lines only when absolutely necessary for clarity.

   d. Identify sections by labeling wherever needed.

6. Dimension drawing completely according to the techniques outlined in Block 4.

C. Performance Criterion Test

The following job assignments will evaluate your skills in applying the sectioning techniques as outlined in the total block. Complete the assigned drawings and hand in for evaluation.

REFERENCE TEXT	ASSIGNMENT	RATING
Technical Drawing	Fig. 7-49 7-51 7-55 7-56	
Engineering Drawing, Zozzora	Fig 8-5 8-8 8-2 8-25	
Engineering Drawing & Design	Fig. 6.42 6.41 6.50 6.51	

BLOCK 6 AUXILIARY PROJECTION

BASIC DRAFTING STUDENT MANUAL

GENERAL OBJECTIVES FOR BLOCK 6

1. Transfer the knowledge of the characteristics of lines and planes as they relate to orthographic projection to auxiliary projections.

2. Apply the principles of auxiliary projection to show the true size and shape of planes which are not "normal" to the orthographic planes of projection by performing the following competencies:

   --Identify the needs for primary and secondary planes of projection as they relate to specific objects.
   --Construct auxiliary view drawings from orthographic projections, pictorial drawings, or models.

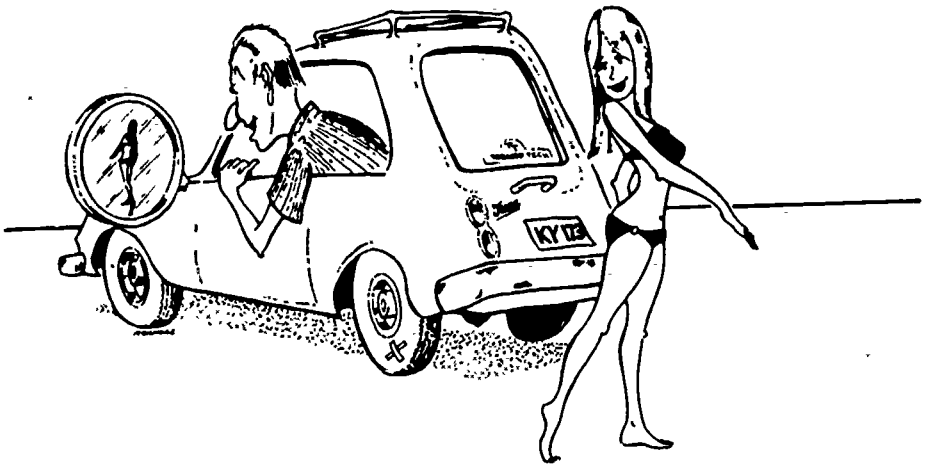

Directions for Use of Block 6 of the Basic Drafting Student Manual

On this sheet, you will find a competency pretest. If you have had previous exposure to any of the information outlined in the general objectives on the cover page for this block, perform the pretests and submit the solutions to your instructor. If you have had no exposure to this phase of drafting, proceed to the section marked "Lesson 1" and work through the outlined learning activities.

Pretest for Block 6

1. How should reference planes always be positioned with regard to projection lines?

2. How many successive auxiliary views of an object is it possible to project, providing we have two adjacent views to begin with?

3. A depth auxiliary view is projected from which view?

4. A width auxiliary view is projected from which view?

5. A height auxiliary view is projected from which view?

6. A dihedral angle is the angle between two _____ _____.

7. The rule for obtaining the edge view of a plane is: Circle the correct answer.

   a. Take a line of sight perpendicular to the plane.
   b. Take a line of sight at 45° to the plane.
   c. Get the point view of any line in the plane.

8. The rule for obtaining the true angle between two planes is: Circle the correct answer.

   a. Get the point view of the line of intersection of the plane.
   b. Take a line of sight perpendicular to one of the planes.
   c. Measure the angle as it appears on the drawing and then divide by the sine of 45°.

9. An auxiliary view which does not show the entire object, but just the necessary surface or part, is called a _____ auxiliary view.

10. An auxiliary view which has been projected from a primary auxiliary view is called a _____ _____ _____.

11. We find the true size of an oblique surface by: first getting a _____ auxiliary view showing the surface as a line. We then project a _____ auxiliary view showing the true size.

12. In the assignments below, use the auxiliary veiws needed to show, in true shape, the planes on the object which are not normal.

REFERENCE TEXT	ASSIGNMENT	RATING
Technical Drawing	Fig. 8-55	
Engineering Drawing (show complete object on primary and secondary a auxiliary views)	Fig. 10-5	
Engineering Drawing and Design	Fig. 8.21	
Instructor's Assigned Text		

SEE INSTRUCTOR FOR NEXT ASSIGNMENT.

Lesson 1: Primary Auxiliary Views

Performance Objective: Given specific interaction topics relating to the projection of primary auxiliary views, describe the concepts and relate them to the needs of object description.

Given specifications for simple or complex objects containing inclined surfaces, prepare primary auxiliary drawing, according to the directions indicated.

Learning Activities:

A. Read Technical Drawing, Giesecke et al., sections 8.1 thru 8.17, Engineering Drawing and Design, Jensen, Chapter 8, Engineering Drawing, Zozzora, Chapter 9. Other suggested text.

B. Read the following informational outline:

1. Any view not projected onto one of the principal orthographic planes of projection is called an auxiliary view.

2. A primary auxiliary view is one which is projected from one of two principal views.

   a. It is perpendicular to one of the principal planes and inclined toward the other two.
   b. An infinite number of auxiliary views may be projected from any view.

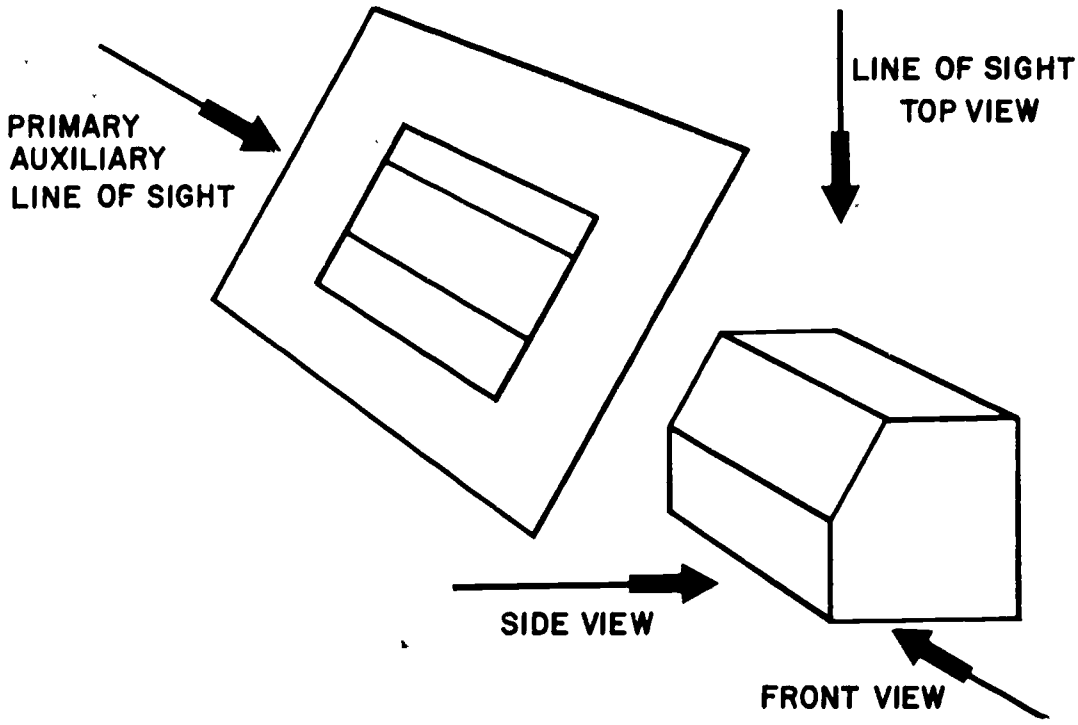

3. There are three types of primary auxiliary views:

   a. Depth auxiliary views are projected from the front view.
   b. Height auxiliary views are projected from the top view.
   c. Width auxiliary views are projected from the side view.

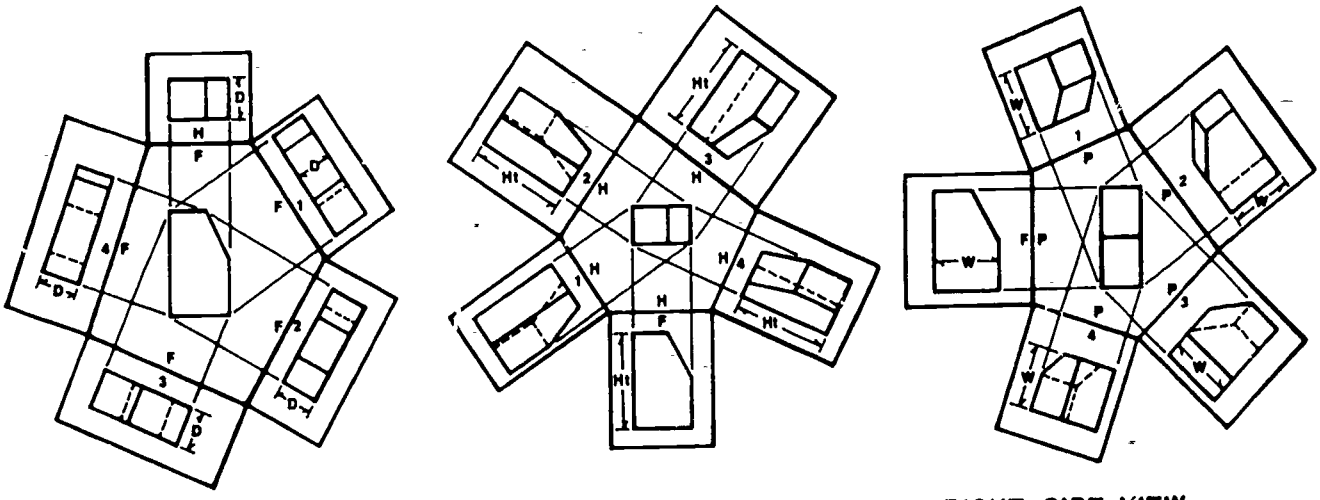

4. Either the folding line method or the reference plane method may be used in drawing auxiliary views.

   a. The reference plane differs from the folding line in that it may touch or pass through the object.

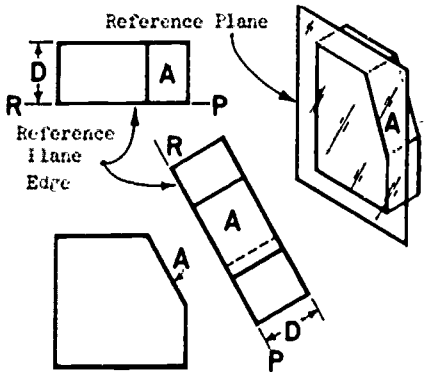

5. Auxiliary views are used to show:

   a. The true length of a line.
   b. A given line as a point.
   c. A given plane as an edge.
   d. The true shape of a plane.

6. The dimensions of an auxiliary view may be found by projecting directly from one of the principal views in a direction perpendicular to the reference line, and:

   a. Transferring the dimensions from the other given view by use of dividers.
   b. Transferring the dimensions from the other given view by use of a mitre line.

7. Partial auxiliary views are often used in working drawings.

   a. They clarify the object by showing only the inclined surface.
   b. They do not require time consuming line work.
   c. They are often needed to complete the principal views.

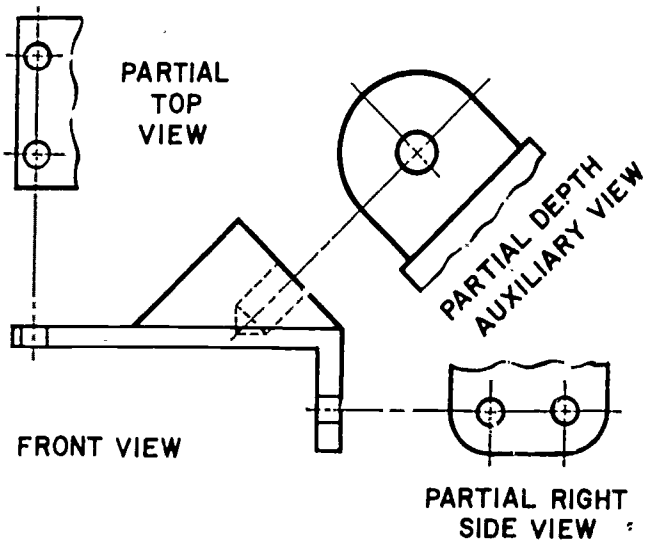

C. Practice the following operational steps:

   1. Draw an auxiliary view of an object containing an inclined surface.

      a. Draw two principal views.

         (1) Front and top
         (2) Front and side

NOTE: The inclined plane must appear as an edge view in one of the principal views.

b. Locate reference line or folding line for auxiliary view.

(1) This line is drawn parallel to the edge view of the inclined surface.
(2) The location of the reference line will determine where the auxiliary view will be drawn.

c. Locate reference line on principal view which shows inclined surface as a plane.
d. Project perpendiculars from the inclined edge into the auxiliary view.
e. Transfer remaining dimensions from the other principal view with dividers.

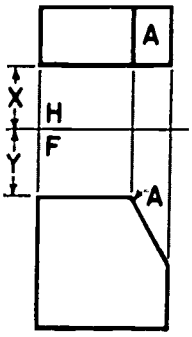

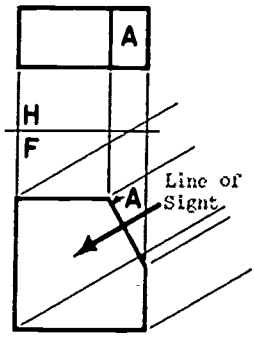

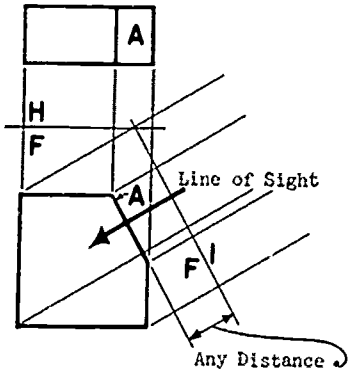

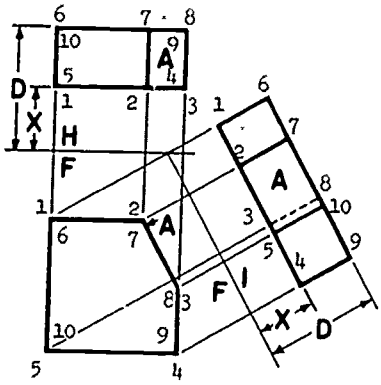

2. Draw an auxiliary view of an object containing an inclined surface by use of a mitre line.

   a. Repeat the first three steps of the preceding operational procedure.
   b. Bisect the angle formed by the two reference lines.
   c. Project perpendiculars from the inclined edge into the auxiliary view.
   d. Project missing dimensions parallel to the principle view reference line until they intersect the angle bisector.
   e. Project missing dimensions from angle bisector into the auxiliary view.

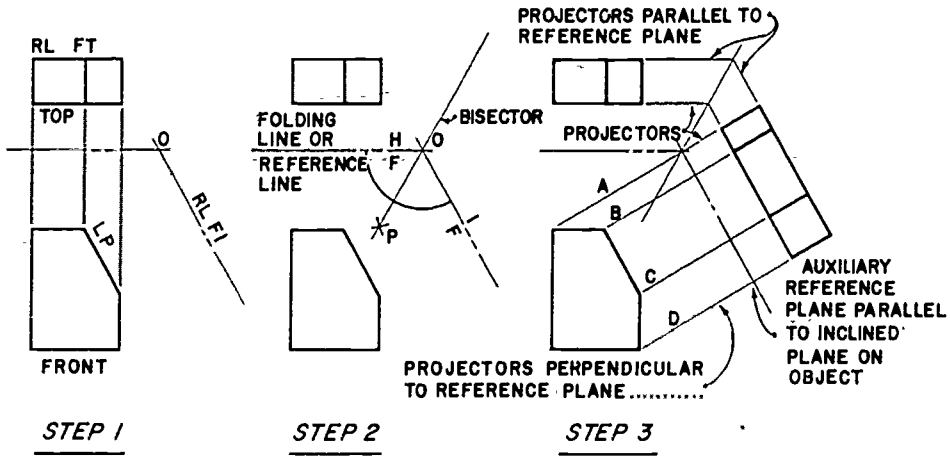

3. Complete the principal view of a symmetrical object by use of a partial auxiliary view.

   a. Draw two principal views omitting the elements which are reliant upon the auxiliary.
   b. Use the symmetry line in the principal view as a reference line, and locate this line in the auxiliary view.
   c. Draw partial auxiliary view (only half the object is required if symmetrical).

      (1) Draw circles and arcs on auxiliary.
      (2) Divide auxiliary shape into workable segments.

   d. Project points back onto inclined edge of principal view.
   e. Project corresponding points into remaining view.
   f. Use irregular curve to complete missing shape by connecting points.

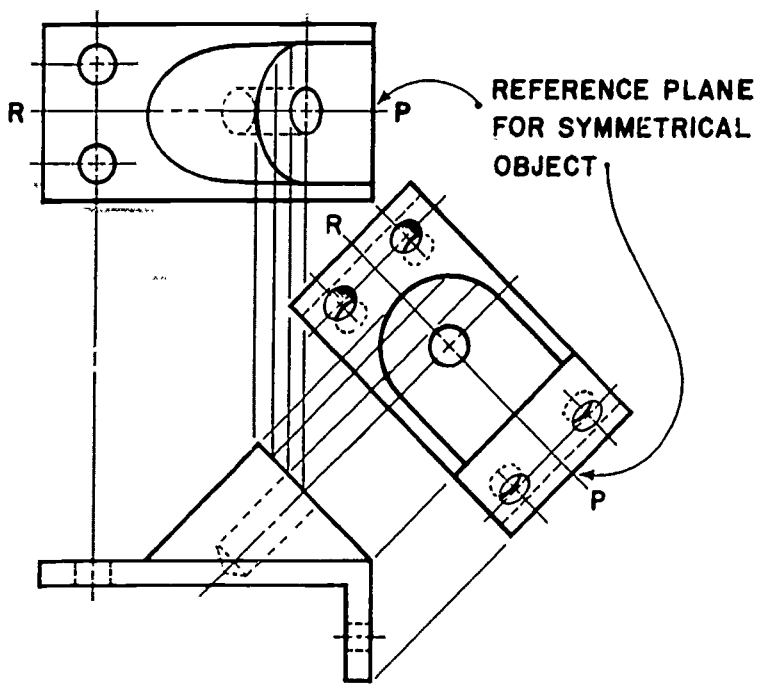

D. Criterion Test

1. Why is it sometimes necessary to draw auxiliary views?

2. What are the three types of primary auxiliary views?

3. What four things are auxiliary views used to show?

4. From how many different directions may auxiliary views be taken?

5. What does an auxiliary view normally show?

6. How may considerable time be saved when drawing auxiliary views of symmetrical objects?

7. What is a partial auxiliary view and when is it used?

8. Complete the following job assignments:

REFERENCE TEXT	ASSIGNMENT	RATING
Technical Drawing	Fig. 8-29, 28 & 12 8-31 8-32 8-35	
Engineering Drawing	Fig. 9-3 9-4 9-5 9-6 9-13	
Engineering Drawing & Design	Fig. 8-8 8-11 8-9 8-10 8-12	
Instructor's Assigned Text		

If you received a rating of 8.0 or above as an assignment average, proceed to the next lesson. If your average was less than 8.0, review your errors and complete the following assignments as issued by your instructor.

REFERENCE TEXT	ASSIGNMENT	RATING

Lesson 2: Secondary Auxiliary Views

Performance Objective: Given specific interaction topics relating to the projections of secondary and successive auxiliary views, describe the concepts and relate them to the needs of object description.

Given specifications for simple or complex objects containing oblique surfaces, prepare drawings with secondary auxiliary views according to the established standards.

Learning Activities:

A. Read Technical Drawing, Giesecke et al., sections 8.19 - 8.25; Engineering Drawing, Zozzora, Chapter 10; Engineering Drawing and Design, Jensen, Chapter 8. Other suggested text.

B. Read the following informational outline:

1. A secondary auxiliary view is required to show in true shape any plane which is oblique to the principle planes of projection.

2. A secondary auxiliary is always projected from a primary auxiliary.

   a. The oblique surface must appear as an edge view in the primary auxiliary.
   b. A true length line on the oblique surface in one of the principle views will appear as a point in the primary auxiliary.

      (1) The reference line for the primary auxiliary must be drawn perpendicular to the true length line.
      (2) Projectors are parallel to the true length line.

3. The reference line for the secondary auxiliary must be drawn parallel to the edge view of the oblique surface.

   a. Projectors into the secondary auxiliary are drawn perpendicular to the reference line.

C. Practice the following operational steps:

1. Using a secondary auxiliary view, draw the true shape of a surface which is oblique to the three principal views.

   a. Draw the principal views required.
   b. Locate and establish a true length line on the oblique surface in one of the principal views.
   c. Draw a reference line for the primary auxiliary which is perpendicular to the true length line.

      (1) This may be drawn at any distance from the object.

d. Project the primary auxiliary view.

(1) The oblique surface will appear as a straight line.

e. Draw a reference line for the secondary auxiliary view which is parallel to the edge view of the oblique surface.

f. Project the secondary auxiliary projectors perpendicular to the reference line.

g. Locate points which correspond to the projectors in the principal view containing the true length line.

(1) The perpendicular distance from reference line #1 to points on the object in the principal view is equal to the perpendicular distance from reference line #2 to points on the object in the secondary auxiliary view.

NOTE: In locating distances to points in successive auxiliary views, the distance is always found by going back two views and transferring these distances into the view being drawn.

h. Transfer the required dimensions and complete the view.

NOTE: Sometimes it is necessary to draw secondary auxiliary views before the primary views can be completed.

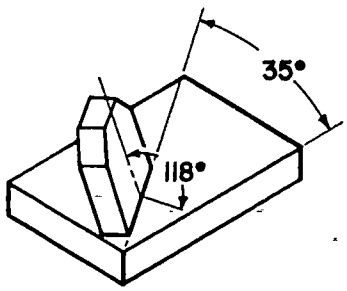

1. GIVEN CONDITIONS

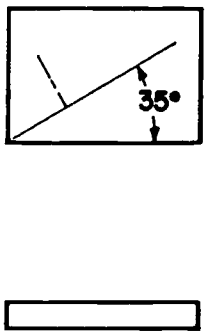

2. DRAW PARTIAL TOP AND FRONT VIEWS

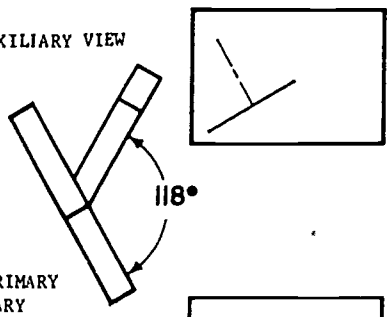

3. DRAW PRIMARY AUXILIARY VIEW OUTLINE

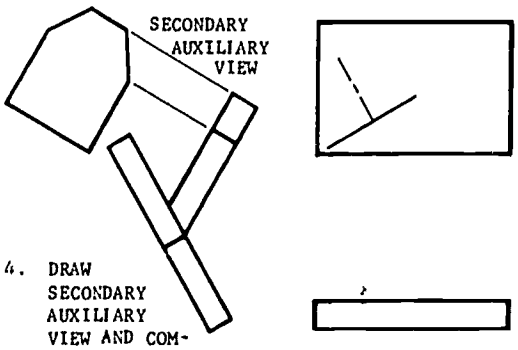

4. DRAW SECONDARY AUXILIARY VIEW AND COMPLETE PRIMARY AUXILIARY VIEW

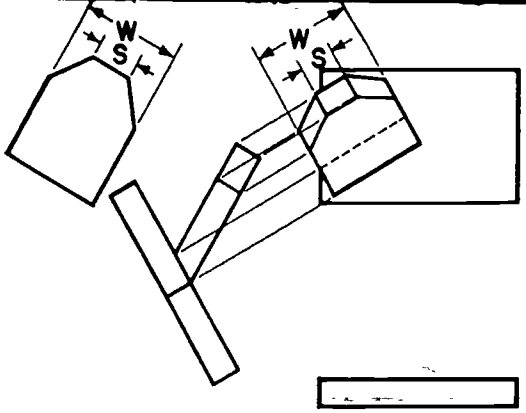

5 COMPLETE TOP VIEW BY PROJECTING LINES AND POINTS FROM PRIMARY AUXILIARY VIEW AND TRANSFERRING DISTANCES FROM SECONDARY AUXILIARY VIEW

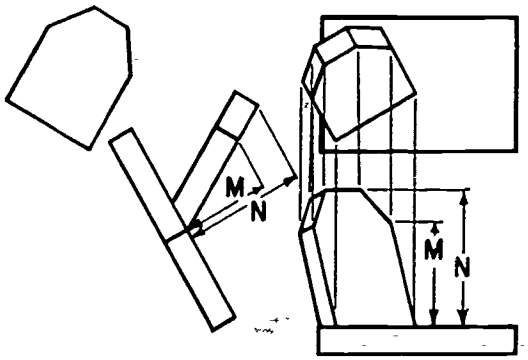

6. COMPLETE FRONT VIEW BY PROJECTING LINES AND POINTS FROM TOP VIEW AND TRANSFERRING DISTANCES FROM PRIMARY AUXILIARY VIEW

D. Criterion Test

1. A secondary auxiliary view is needed to show _____ _____ in true shape.

2. A primary auxiliary view is needed to show _____ _____ in true shape.

3. In preparing to draw a secondary auxiliary view, a _____ _____ line must be located in a principal view.

4. How may we insure that an oblique plane will appear as an edge view in a primary auxiliary view?

5. In successive auxiliary views, the draftsman must refer back _____ to obtain dimensions.

6. Perform the following job assignments:

REFERENCE TEXT	ASSIGNMENT	RATING
Technical Drawing	Fig. 8-50, 1, 2, 3, 4, 5, 6 8-56	
Engineering Drawing	Fig. 10-1 10-2 10-7 10-6 10-11	
Engineering Drawing and Design	Fig. 8.20 8.21 8.22 8.23	
Other assigned text		

If you received a rating of 8.0 or above as an assignment average, proceed to the next lesson. If your average was less than 8.0, review your errors and complete the following jobs as assigned by your instructor. (Redo any drawings with scores of less than 6.5.)

REFERENCE TEXT	ASSIGNMENT	RATING

BLOCK 7 PICTORIAL VIEWS

BASIC DRAFTING STUDENT MANUAL

GENERAL OBJECTIVES FOR BLOCK 7

1. Describe and categorize the various types of pictorial drawings.
2. Analyze specific jobs and determine the types of pictorial drawings that will be best suited to the job.
3. Select the view and angle which will best describe the object.
4. Completely delineate any type of pictorial drawing.

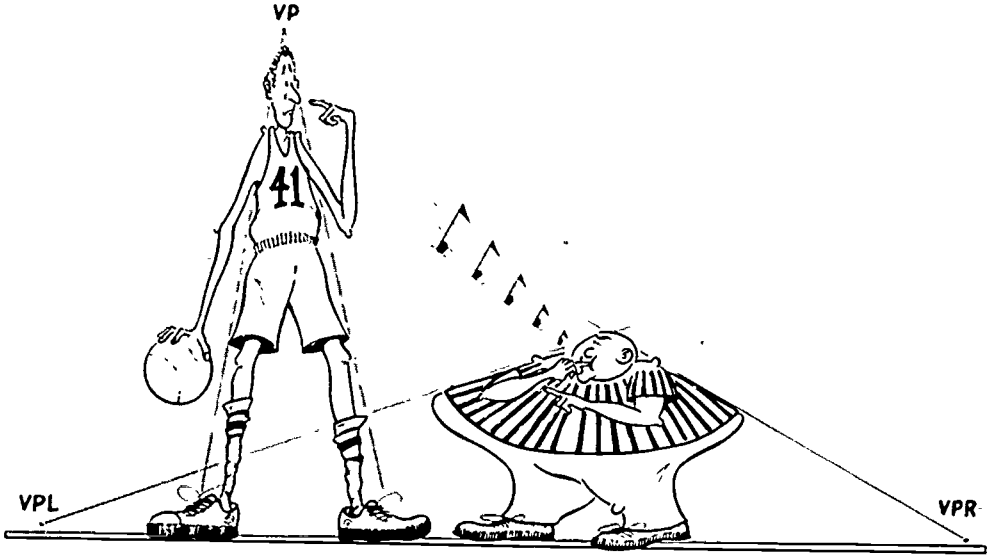

Directions for the Use of Block 7 of the Basic Drafting Student Manual

This block is designed for student use in individualized programmed instruction. It will permit you to advance through the course at as rapid a rate of progress as is individually possible. The block contains learning materials and specific assignments which you are to perform to the satisfaction of the instructor.

Often, for the purpose of visual clarity, it is necessary to illustrate more than one surface of the object being viewed. Drawings which produce this effect are known as pictorial drawings. They are generally used to illustrate objects to persons not trained in the understanding of multi-view projections and to clarify difficult-to-visualize concepts to the craftsman.

Since the block on Pictorial Views covers such a vast amount of related but dissimilar material, it will be divided into six sub-units: oblique, isometric, dimetric, trimetric, one-point perspective, and two-point perspective. Each unit will have its own pre-test and criterion test. Each unit functions independently with the exception of the units on dimetric and trimetric which are reliant upon information learned in the unit on isometric.

Upon the advice of the instructor, work through the pre-tests, or begin at Lesson 1.

Lesson One will be an introduction to Pictorial Drawing. If you feel that you already know this material, proceed to the criterion post test. Otherwise read the following information.

MULTIVIEW

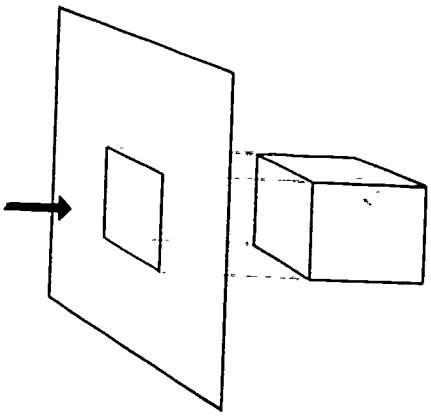

OBJECT IS PARALLEL TO PICTURE PLANE

OBLIQUE

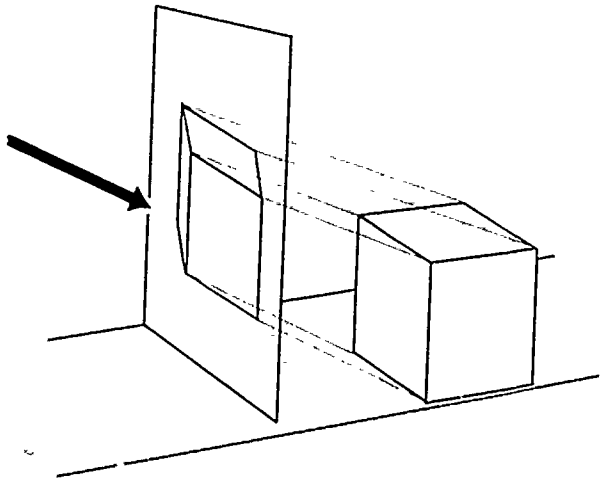

OBJECT IS PARALLEL TO PICTURE PLANE

AXONOMETRIC

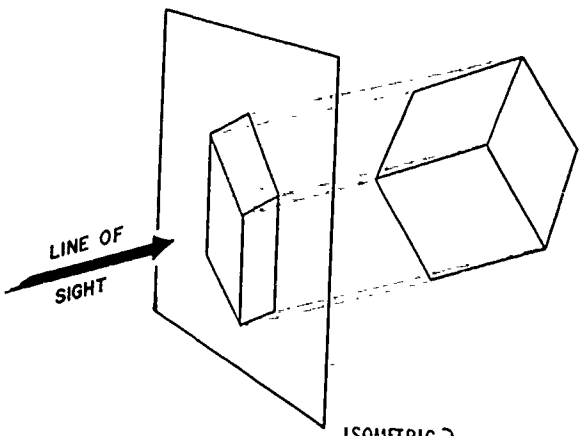

ISOMETRIC
DIMETRIC
TRIMETRIC
} Object is revolved & tilted

PERSPECTIVE

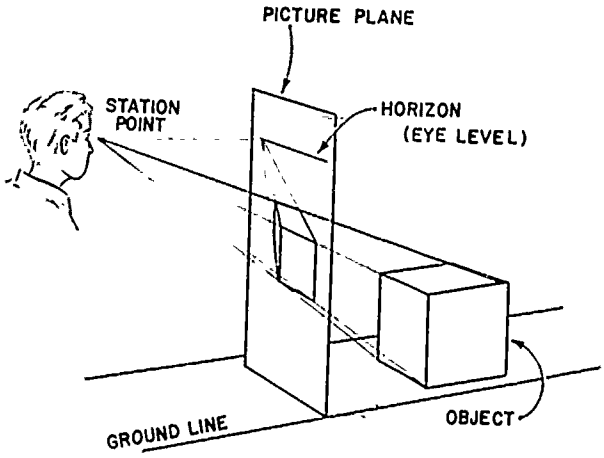

ONE POINT - Object is parallel to picture plane
TWO POINT - Object is revolved
THREE POINT - Object is revolved & tilted

Lesson 1: Introduction to Pictorial Drawing

Performance Objective: When shown illustrations of various means of creating three dimensional affect pictorially, identify the types and define the characteristics and differences of each.

Learning Activities:

A. Read Architectural Graphics, Martin, Chapter 1; Engineering Drawing and Design, Jensen, p. 181; Technical Drawing, Giesecke et al., sections 16.1, 16.2.

B. Read the following content outline:

1. Oblique Pictorial

   a. One face is parallel to the picture plane.
   b. Projections are oblique to the picture plane and parallel to each other.
   c. Object is viewed from infinity.

OBLIQUE DRAWING

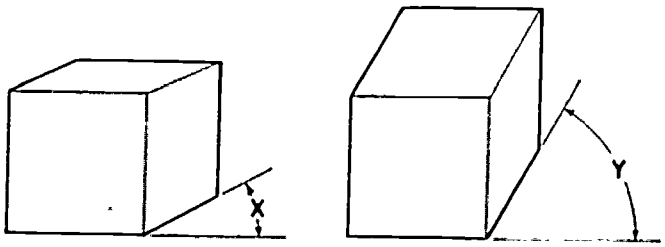

—RECEDING AXIS MAY VARY

FRONT VIEW IS PARALLEL TO ORTHOGRAPHIC PICTURE PLANE

2. Axonometric Pictorial

   a. Isometric drawing

      (1) Object is oblique to the picture plane.
      (2) All three axis form equal angles to the picture plane.
      (3) Projections are perpendicular to the picture plane.

   b. Dimetric drawing

      (1) Object is oblique to the picture plane.
      (2) Two axis form equal angles to the picture plane.
      (3) Projections are perpendicular to the picture plane.

c. Trimetric drawing

(1) Object is oblique to the picture plane.
(2) All axes form different angles to the picture plane.
(3) Projections are perpendicular to picture plane.

PICTORIAL

ISOMETRIC PICTORIAL

ALL THREE ANGLES AND UNITS OF MEASURE ON AXES ARE EQUAL

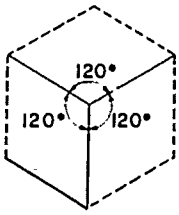

DIMETRIC PICTORIAL

TWO ANGLES AND UNITS OF MEASURE ARE EQUAL. ONE ANGLE AND UNIT OF MEASURE ON A RECEDING AXIS ARE DIFFERENT

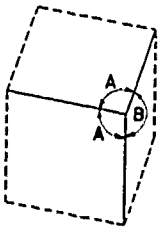

TRIMETRIC PICTORIAL

ALL THREE ANGLES AND SCALES ARE DIFFERENT.

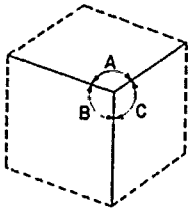

3. Perspective Pictorial

a. One-point perspective

(1) One face is parallel to the picture plane.
(2) Projections form various angles with the picture plane.
(3) Object is viewed from a measurable distance.

b. Two-point perspective

(1) Object is oblique to the picture plane.

--Vertical lines are parallel to the picture plane.

(2) Projections form various angles with the picture plane.
(3) Object is viewed from a measurable distance.

ONE-POINT PERSPECTIVE

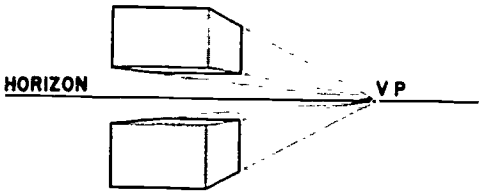

ONE FACE PARALLEL TO PICTURE PLANE

TWO-POINT PERSPECTIVE

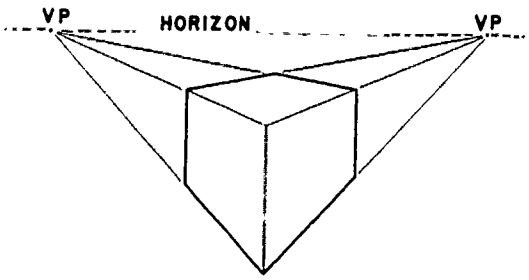

OBJECT IS REVOLVED WITH PICTURE PLANE

C. Criterion Test

1. What are the two main considerations in differentiating between the types of pictorial drawings?

2. What is meant by distortion, and in which type of pictorial is it likely to be most obvious?

3. Which type of pictorial drawing is least likely to be used by a draftsman?

4. Which type of pictorial drawing most closely relates to multi-view projection?

Unit on Oblique Drawing

Pretest:

Complete one of the following drawings and hand in for evaluation. You must score a rating of 10 or work through the complete unit.

Section and Dimension Completely:

REFERENCE TEXT	ASSIGNMENT	RATING
Technical Drawing	Fig. 17-25.3	
Engineering Drawing	Fig. 11-36	
Engineering Drawing and Design	Fig. 9.57	
Instructor's suggested text:		

OBLIQUE

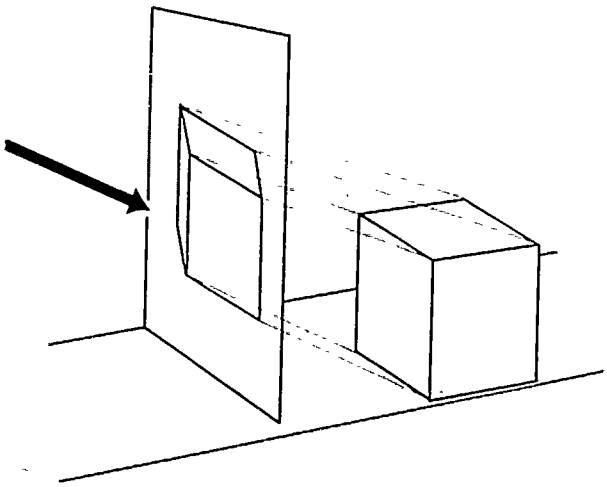

OBJECT IS PARALLEL TO PICTURE PLANE

Lesson 2: Oblique Concepts and Techniques

Performance Objective: Given the necessary specifications for simple objects containing any of the following: an angle on a receding or non-oblique plane; circle and arcs on a receding plane; irregular shapes, prepare a finished oblique drawing to the established standards.

Learning Activities:

A. Read Architectural Graphics, Martin, Chapter 7; Engineering Drawing, Zozzora, sections 11-20 then 11-27; Engineering Drawing and Design, Jensen, pgs. 189 & 190; Technical Drawing, Giesecke et al., sections 17.1 thru 17.9; Technical Illustration, Thomas, Chapter 13. Other references.

B. Read the following informational outline:

1. Definition of Oblique Drawing

   a. Oblique drawing is the simplest method of making a three dimensional drawing.

      (1) It relies upon a basic understanding of orthographic view.
      (2) It is an easy way to make the transistion to three dimensions.
      (3) It combines an orthographic picture plane with a receding axis.
      (4) True dimensions are usually measured along three axes.
      (5) One face of the object may always be represented in true size.

   b. Drawbacks in the use of oblique drawing

      (1) Excessive distortion

2. Oblique Axes

   a. Three lines of which two are always perpendicular

   b. General style

      (1) Angle of receding axis may vary
      (2) Usually made to be 30°, 45°, or 60°

c. Cavalier style

(1) 45° receding axis
(2) Receding axis is full scale

d. Cabinet style

(1) Receding axis is 45°
(2) Receding axis is drawn at half scale

OBLIQUE PICTORIAL

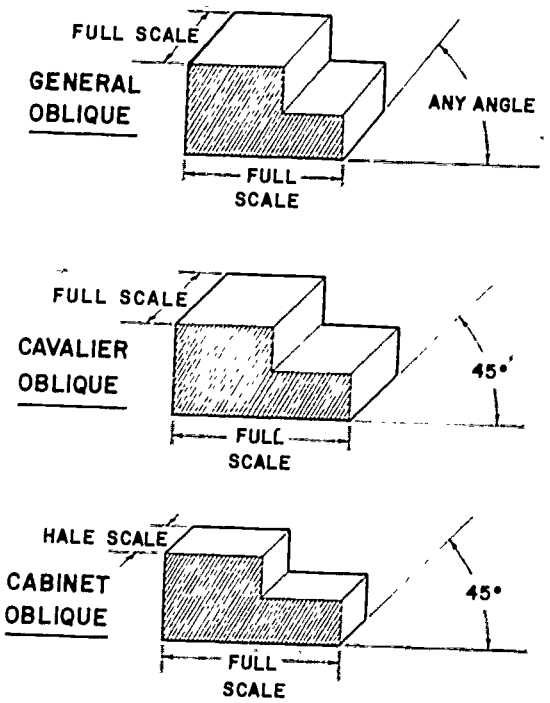

e. Reversed axis shows the bottom view of object.

f. Revolved axis shows the vertical axis tilted.

OBLIQUE PICTORIAL

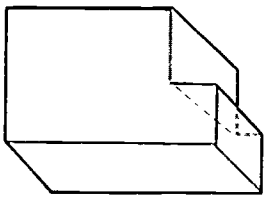

AXIS MAY BE REVERSED

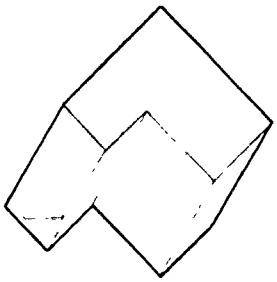

AXIS MAY BE REVOLVED

3. Positioning of Major Shapes

a. Characteristic appearance of object should be placed parallel to the picture plane.

(1) Circular arcs may be drawn with a compass.
(2) Irregular curves are shown in true shape.
(3) Object is more easily identified.

b. Long dimension should be placed parallel to plane of paper whenever possible.

(1) This reduces distortion.
(2) Circles and irregular curve take precedence over long axis.

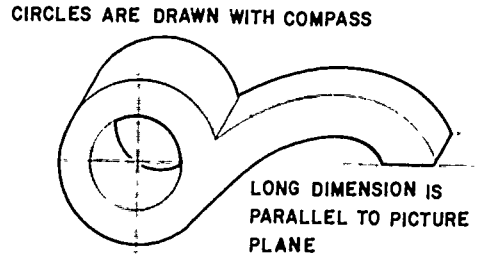

AVOID DISTORTION-PREFERRED METHOD

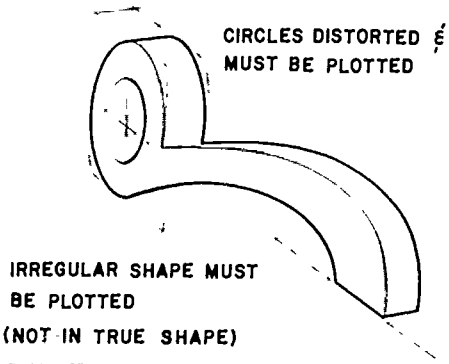

OBJECT APPEARS DISTORTED
AVOID THIS METHOD.....

4. Constructing a Circle as an Ellipse

   a. Four-center method may be used with full scale receding axis.
   b. Rectangular coordinates may be used with either reduced scale receding axis or full scale receding axis.

5. Constructing a Circle as an Ellipse on an Inclined Plane

   a. Project points from rectangular coordinates.

6. Constructing an Irregular Shape on an Inclined Plane

   a. Project points from rectangular coordinates.

C. Perform the following practice operations:

1. Draw a simple rectangular solid in oblique.

   a. Select face of object that is most characteristic of its shape.
   b. Draw this face as it would appear if placed parallel to the picture plane.

      NOTE: This may include no more of the object than is defined as a single plane.

   c. Draw the receding axis at any angle with the horizontal.

      NOTE: The receding angle is usually drawn at 30°, 45°, or 60°. The angle should be chosen that shows the object most clearly.

   d. Draw the other two sides of the object which would be seen along the receding axis. These are measured along the axis and may be drawn to full scale, or they may be foreshortened to avoid distortion.
   e. Hidden lines are generally omitted.

2. Draw a simple oblique with angles.

a. Locate lines and angles on the orthographic views to be drawn to the same scale as the oblique.
b. Locate the significant intersections on the orthographic views.
c. Transfer the dimensions that locate the intersections into the oblique planes. The rectangular coordinate from the orthographic views become oblique coordinates along the receding axis.
d. An alternate method involves drawing the complete orthographic views on the faces of an oblique box.

CAUTION: This technique involves more line work that is necessary to the drawing and the work could become cluttered and time consuming.

OBLIQUE

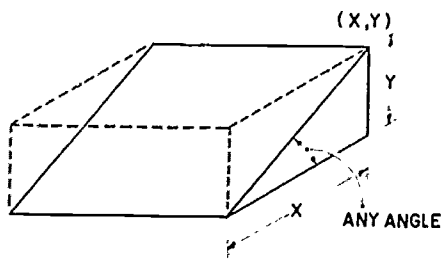

STEPS IN OBLIQUE DRAWING

BOX CONSTRUCTION

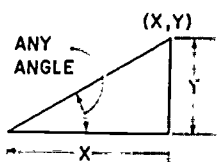

Locate rectangular coordinates (x,y) in orthographic view, and transfer these actual dimensions to the oblique drawing to determine angle.

3. Draw an oblique containing circles and arcs on a receding plane.

a. For circles or arcs where the receding axis is drawn to full scale:

(1) Draw an oblique square with side of lengths equal to the diameter of the circle to be drawn.
(2) Find radius centers by projecting perpendiculars from mid-pointed square.
(3) Use radius centers to construct circle or arc.

b. For circles or arcs where the receding axis is foreshortened, transfer shape by use of rectangular coordinates.

FOUR-CENTER METHOD
FOR ELLIPSE

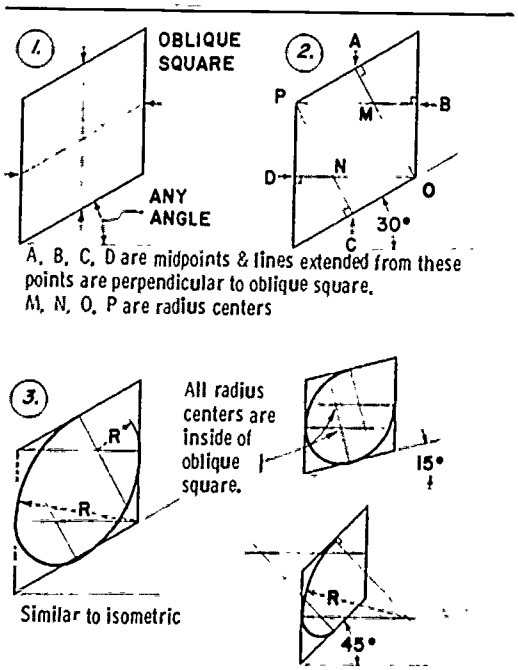

4. Draw an oblique containing irregular shapes.

   a. Select a view that will best show the object.
   b. Try to choose a view that produces the least amount of distortion.
   c. Select a view that requires the least amount of distortion.
   d. Establish rectangular coordinates by passing a series of critical cutting planes through the object. These are established on the orthographic views.
   e. Plot rectangular coordinates by using reference lines in orthographic planes and oblique planes.

OBLIQUE

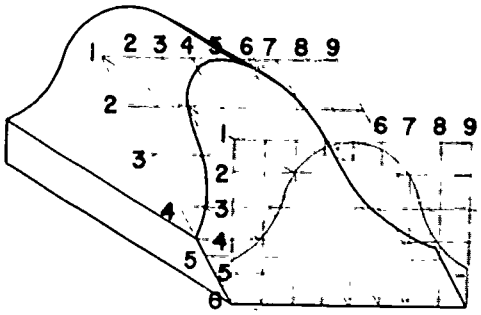

CONSTRUCTING AN IRREGULAR SHAPE ON AN INCLINED PLANE

D. Criterion Test

1. How does an oblique drawing relate to an orthographic view of the same object?

2. What is the difference between a cabinet and a cavalier projection?

3. What is the advantage of placing the part of an object which contains circles and arcs in the front plane?

4. Why is the offset method considered a more accurate method of drawing ellipses?

5. Which of the following methods will be used to draw a curve in an oblique drawing on the receding axis:

   a. Offset method
   b. Four-center method
   c. Box method
   d. Alternate four-center method

T. F. 6. A cabinet projections is any oblique drawing where the receding line is not full length.

T. F. 7. The receding axis of an oblique drawing may be any convenient angle.

T. F. 8. The frontal plane of an oblique drawing is drawn parallel to plane of projection.

REVIEW ANY INFORMATION OR OPERATION NOT FULLY UNDERSTOOD, AND WORK THROUGH NEXT LESSON.

Lesson 3: Dimensioning, Sectioning and Application

Performance Objectives: Describe completely the techniques of oblique sectioning needed to show the interior detailing of an object.

Correlate the technique of oblique dimensioning with general dimensioning practices and describe any special rules which apply to the satisfaction of the instructor.

Given the specifications for a complex object, prepare an oblique drawing to established standards. Section and dimension where required.

Learning Activities:

A. Read Engineering Drawing, Zozzora, section 11-28, 11-29; Technical Drawing, Giesecke, et al., section 17-10, 17-12, 17-6, 17-10.

B. Read the following informational outline:

1. Types of Sections

   a. Full section

      (1) Rarely used
      (2) Removing half of the object often makes it impossible to show important external features.

   b. Half section

      (1) Often used
      (2) Show interior and exterior details

   c. Broken-out section

      (1) Often used

2. Cutting Planes - plane passed parallel or perpendicular to picture plane

3. Section Lining - must be selected to best angle of the receding axis

4. Rules for Dimensioning - covered in Block V

5. Special rules that apply:

   a. Most notes should lie in the plane of the paper.
   c. Dimensions may be placed on the object.
   c. Center lines are helpful wherever possible.
   d. Arrowheads and figures should be in the plane of the surface that they dimension.

(1) Figures that refer to dimensions of surfaces that are in the plane of the receding axis should also be in that plane.

C. Practice the following operational steps:

1. Establish view that will best describe the object with as many circles, circular arcs, and irregular curves shown in true shape as possible.

2. Utilize center lines as a first step in layout procedure.

3. Draw in major features.

4. Determine if any important details have been obscured (hidden) and section away the portion that will reveal them.

5. Dimension object completely using center lines to facilitate dimensioning whenever possible.

OBLIQUE

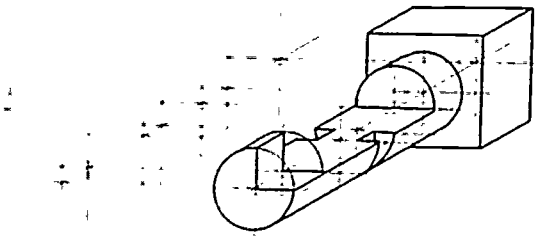

ESTABLISH CENTER LINES

BLOCK IN OBJECT

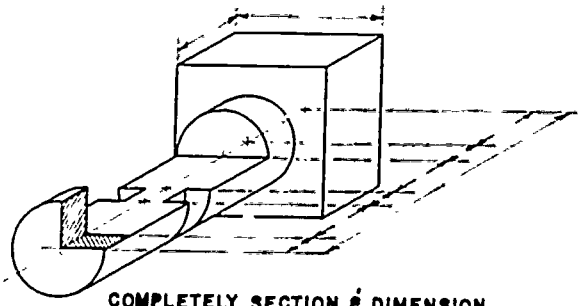

COMPLETELY SECTION & DIMENSION

D. Criterion Test

REFERENCE TEXT	ASSIGNMENT	RATING
Technical Drawing	17-23, 1 17-23, 3 17-23,10 17-24, 4 17-24, 6	
Engineering Drawing	11-14 11-18 11-21 11-36	
Engineering Drawing & Design	9.46 9.47 9.58 9.57 9.54	
Other assigned text		

SEE INSTRUCTOR FOR ADDITIONAL DRAWINGS ON NEXT ASSIGNMENT.

Unit on Axonometric Drawing

Pretest:

Complete one of the following drawings and hand in for evaluation. You must score a rating of 10 or you will be required to work through the complete unit.

Dimension Completely:

REFERENCE TEXT	ASSIGNMENT	RATING
Technical Drawing (Construct by intersection of cutting planes.)	Fig. 16-54.13	
Engineering Drawing (Section as required)	Fig. 11-31	
Engineering Drawing and Design	Fig. 1.57	
Instructor's suggested text		

AXONOMETRIC

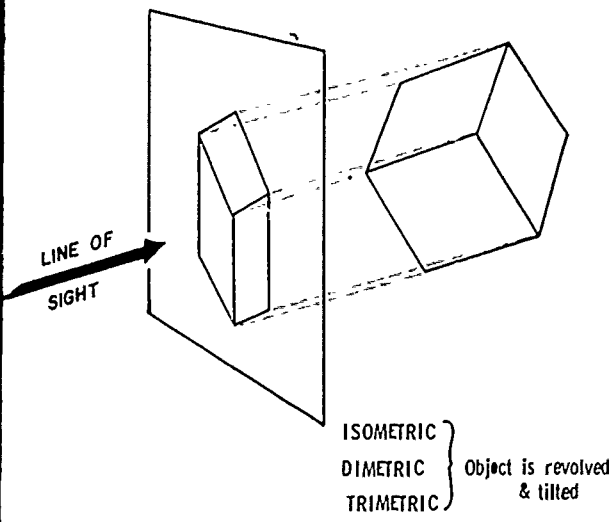

ISOMETRIC

ALL ANGLES AT ORIGIN EQUAL

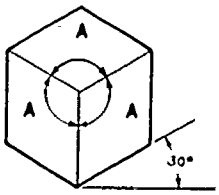

DIMETRIC

2 ANGLES AT ORIGIN EQUAL

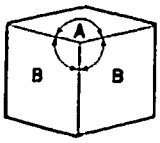

TRIMETRIC

NO ANGLES AT ORIGIN EQUAL

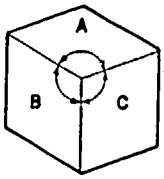

Lesson 4: Isometric Concepts and Techniques

Performance Objectives: Describe, compare, and contrast isometric projection and isometric drawing.

Given specifications for simple or complex objects involving circle, arc or irregular shapes on isometric or non-isometric planes, prepare drawings according to the following methods: auxiliary projection, revolution and tilt, isometric drawing.

ISOMETRIC

ALL ANGLES AT ORIGIN EQUAL

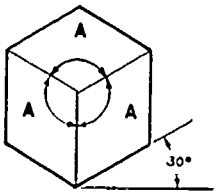

Learning Activities

A. Read Architectural Graphics, Martin, Chapter 5; Engineering Drawing, Zozzora, sections 11-8, 11-9 thru 11-13; Engineering Drawing and Design, Jensen, pp. 184, 185; Technical Drawing, Giesecke et al., sections 16-4 thru 16-24; Technical Illustration, Thomas, Chapter 3.

B. Read the following informational outline:

1. Definition of Isometric Projection

   a. Isometric means equal measure.
   b. Edge of cube forms equal angles (120°).
   c. Projected directly onto the picture plane.

2. Definition of Isometric Drawing

   a. True lengths are measured along the three axis.
   b. Edge of cube forms equal angles (120°).

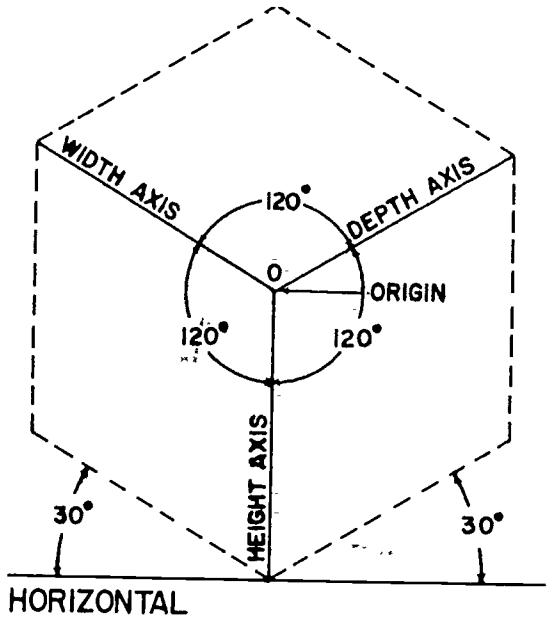

ISOMETRIC PICTORIAL

3. Significant Differences

   a. Isometric projection shows the object as a true projection.

      (1) May be projected as an auxiliary view
      (2) May be obtained from a revolution of 35° 16'

   b. Isometric drawing does not require the projection steps.

      (1) Measured directly along the receding axis
      (2) Approximately 1 1/4 times larger than the true projection
      (3) Usually advantageous to use

4. Isometric Scale

   a. Equal $\sqrt{2/3}$ times the full scale
   b. May be made by geometric construction

5. Positioning of Objects

   a. Isometric axis

      (1) Origin is the point of convergence of the three principal dimensions.

(2) Height axis is usually vertical.
(3) Length and width axis recede at 30° angles with the horizontal when the height axis is vertical.
(4) Position of axis (120°) should not be changed.
(5) Reversed axis shows the bottom view.
(6) Long axis isometric has one horizontal axis.

b. Plane surfaces are rarely shown in true shape.

6. Isometric Lines - parallel to the isometric axes

7. Non-isometric Lines

a. Inclined or askew to the isometric axis
b. Cannot be measured directly

8. Constructing a Circle as an Ellipse

a. Four-center method or isometric plane
b. Coordinate system on non-isometric plane

9. Constructing an Irregular Shape, Inclined Surface, and Oblique Surfaces

a. Point projection from rectangular coordinates
b. Intersection of planes

10. Hidden Lines - usually omitted unless essential to define object

C. Practice the following operational steps:

1. Draw isometric projection of cubes by auxiliary projections.

   a. Draw top view revolved 45° to the picture plane.
   b. Draw left side and front views to correspond to arrangement of top view.
   c. Establish direction of sight by passing a line from the lower left hand corner to the upper right hand corner of the front view.
   d. Draw projection lines from the front view parallel to the line of sight.
   e. Complete the auxiliary view.

      NOTE: The line of sight will appear as a point projection.

   f. The auxiliary view is also the isometric projection of the cube.

ISOMETRIC PROJECTION BY REVOLUTION AND AUXILIARY

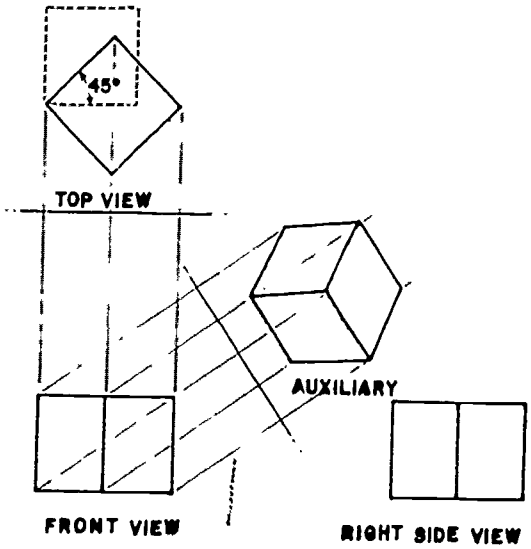

2. Draw isometric projection of solids by revolution and tilt.

   a. Draw top view revolved 45° to the picture plane.
   b. Draw left side view to correspond to top view placement.
   c. Tilt left side view to angle of 35° 16' with horizontal.

      NOTE: This may be revolved counterclockwise about upper left hand corner by using a compass.

   d. Project intersections from top and left side views to create isometric drawing.

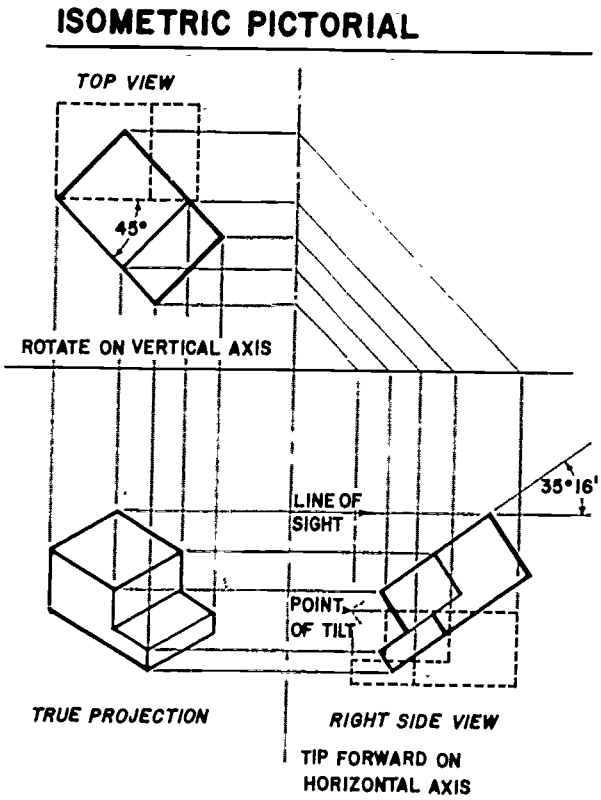

3. Prepare an isometric drawing of rectangular solid.

   a. Establish origin and isometric axis.

      NOTE: With a vertical height axis, the receding axes are always drawn at 30° to the horizontal.

   b. Measure true length dimensions along the plane parallel to the major axes.
   c. Complete object by drawing all lines parallel to their respective axis.
   d. Omit hidden lines unless necessary to the description of the object.

4. Prepare an isometric drawing of an object containing circles.

   a. For circles or arcs drawn on a plane parallel to the isometric planes:

      (1) Draw an isometric square with sides equal in length to the diameter of the circle.
      (2) Locate the radius centers by projecting perpendiculars from the midpoints of the square (Four-center method).

      NOTE: These midpoint projections intersect with the opposite corners in isometric.

FOUR-CENTER METHOD FOR ELLIPSE

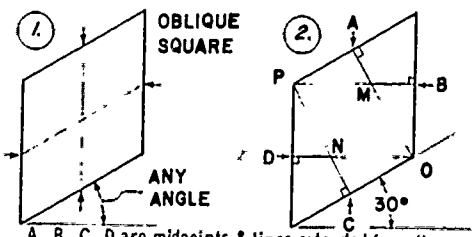

A, B, C, D are midpoints & lines extended from these points are perpendicular to oblique square.
M, N, O, P are radius centers

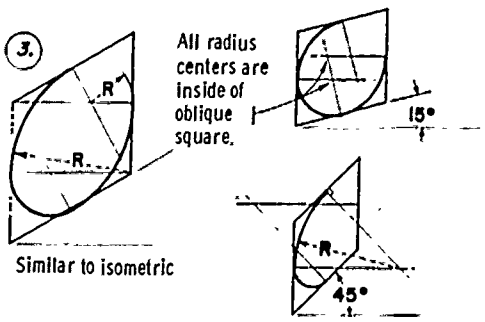

Similar to isometric

Two radius centers fall outside of oblique square

4 CENTER METHOD — TOP PLANE

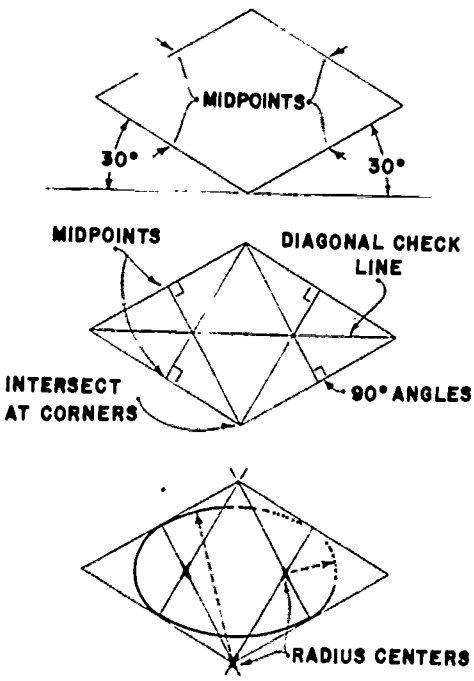

(3) Use midpoints to construct a circle or arcs.

b. For circle or arcs drawn on a non-isometric plane - plot the shape by use of intersections of planes and rectangular coordinates.

5. Prepare an isometric drawing of an object containing irregular shapes.

a. Choose a view that best shows the object with the least amount of offset construction.
b. Draw isometric construction box and orthographic views.
c. Pass a series of imaginary cutting planes through orthographic views and transfer to isometric box.

NOTE: Cutting planes are passed parallel to the isometric axis.

d. Locate and plot critical points of intersection that define the shape of the object on the orthographic views.
e. Transfer these intersections to the isometric by using the imaginary cutting planes and reference lines.

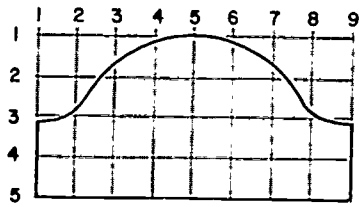

CONSTRUCTING AN IRREGULAR SHAPE
USING RECTANGULAR COORDINATES

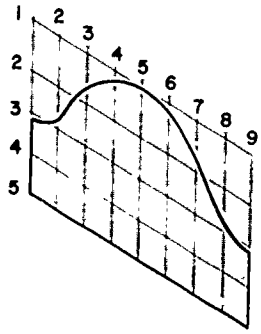

D. Criterion Test

1. Why are the lines of an isometric projection foreshortened?

2. How does the foreshortening of an isometric relate to an isometric scale?

3. What are the relative advantages of an isometric drawing and an isometric projection?

4. The isometric axes is obtained by revolving the object ____° and tilting it _____° _____'.

5. In an isometric drawing, which scale is used for lines drawn parallel to the isometric axes?

6. Why are non-isometric lines not drawn to true length?

7. How is an orthographic angle obtained in an isometric view?

Lesson 5: Dimensioning, Sectioning, and Application

Performance Objectives: Describe the techniques of isometric sectioning necessary to show interior detailing of an object.

Correlate the techniques of isometric dimensioning with general dimensioning and oblique dimensioning practices, and describe any special rules which apply.

When given the specifications for a complex object, prepare an isometric drawing to established standards. Section and dimension where required.

Learning Activities:

A. Read Engineering Drawing, Zozzora, sections 11-16, 11-17, 11-18, 11-19; Engineering Drawing and Design, Jensen, p. 186 thru 188; Technical Drawing, Giesecke et al., section 16-25, 16-26.

B. Read the following informational outline:

1. Types of Sections

   a. Full section

      (1) Used on symmetrical objects
      (2) Shows irregular interior shapes
      (3) Cut surface usually drawn first

   b. Half section

      (1) Shows 1/4 of object removed
      (2) More useful in showing interior and exterior than full section
      (3) Entire object usually drawn first

   c. Broken out section

2. Cutting Planes - passed parallel to isometric axis

3. Section Lining

   a. Similar to that in orthographic drawing
   b. Usually at 60° with horizontal

      (1) Angle should be changed if 60° is parallel to prominent object lines

4. Rules for General Dimensioning - covered in Block IV.

5. Special Rules for Dimensioning

a. Aligned system

(1) Dimension lettering lies in the axis planes

b. Unidirectional system

(1) All lettering is in the plane of the paper

c. Vertical lettering should be used for both systems

(1) Inclined lettering not recommended

d. Dimensions may be placed on object

e. Centerlines useful

f. Arrowheads and figures lie in plane of surface that they dimension

C. Practice the following operational steps:

1. Establish centerlines as a first step.

2. Box in outline of object.

3. Plot all irregular shapes.

4. Determine if any important interior details should be observed and section away the portion that will reveal them.

5. Dimension object completely using centerline to facilitate dimensioning wherever possible.

NOTE: Refer to illustration in Oblique Unit, page _____.

D. Criterion Test

1. What is the angle usually used for section liners in isometric?

2. Why would inclined letters be not desirable in isometric?

3. Why are more dimensions placed on the object in pictorial drawings?

4. At which angles are cutting planes passed in isometric?

5. Complete the following job assignments:

REFERENCE TEXT	ASSIGNMENT	RATING
Technical Drawing	Fig. 16-51, 1 16-52, 1 16-52, 6 16-52, 10 16-52, 8	
Engineering Drawing	Fig. 11-23 11-20 11-26 11-31 11-33 (half section) 11- 9	
Engineering Drawing & Design	Fig. 9-43 9-49 9-52 9-54 9-57 9-63	
Other assigned text		

SEE INSTRUCTOR AND PROCEED TO NEXT LESSON.

Lesson 6: Dimetric Concepts and Applications

Performance Objectives: Describe dimetric pictorial drawing and give specific characteristics.

Given the specifications for a complex object, prepare a dimetric pictorial drawing to the established standards.

DIMETRIC

2 ANGLES AT ORIGIN EQUAL

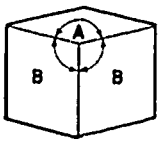

Learning Activities:

A. Read Architectural Graphics, Martin, Chapter 6; Technical Drawing, Giesecke et al., sections 16-29, 16-30, 16-31.

B. Read the following informational outline:

1. Definition of Dimetric Projection

   a. Dimetric means two-measure.
   b. Scale may be found by method of intersections.
   c. Origin of cube has two equal angles.

      (1) The two equal angles may vary in magnitude but must be more than 90°

   d. Projected onto picture plane.

2. Definition of Dimetric Drawing

   a. Origin of cube has two equal angles.
   b. Scales must be determined for measuring along axes.

      (1) The same scale is used for the two equal angles
      (2) Scale may be determined for use of Architects scale by calculating with formula $\cos A = \frac{-\sqrt{2H \quad V \quad - V}}{2HV}$
      (3) A = Angle, H = Equal Scale, V = Third Scale

3. Significant Difference Between Projection and Drawing

   a. Projection can more closely resemble a predetermined sketch.

C. Practice the following operational steps:

1. Establish origin

2. Determine scales that correlate to dimetric axes.

3. Measure lengths along planes parallel to the principle axes according to the required scale.

4. Complete object by drawing all lines parallel to their respective axes.

5. Omit hidden lines unless necessary to the description of the object.

APPROXIMATE DIMETRIC DRAWING

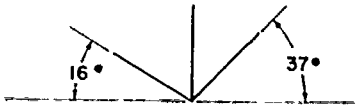

DETERMINE DIMETRIC AXIS

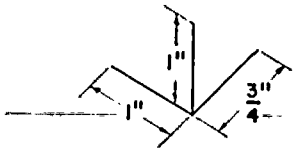

ESTABLISH SCALES

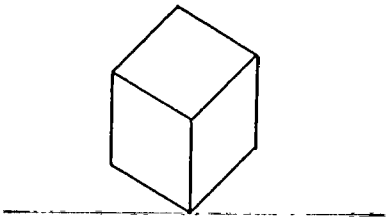

COMPLETE OBJECT

D. Criterion Performance Test

Complete one of the following drawings using the method of dimetric drawing.

REFERENCE TEXT	ASSIGNMENT	RATING
Technical Drawing	Fig. 16-51, 1 Key Plate	
Engineering Drawing	Fig. 11-23 Plug	
Engineering Drawing & Design	Fig. 9.43 Lock Base	

SEE INSTRUCTOR BEFORE PROCEEDING TO NEXT LESSON OR FOR ADDITIONAL ASSIGNMENTS.

Lesson 7: Trimetric Concepts and Application

Performance Objectives: Describe trimetric projection and its method of construction.

Given the specifications for a simple object, prepare a trimetric pictorial by the method of intersections to the established standards.

TRIMETRIC

NO ANGLES AT ORIGIN EQUAL

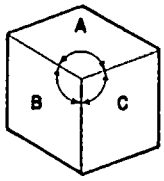

Learning Activities:

A. Read Technical Drawing, Giesecke et al., sections 16-32, 16-33, 16-34, 16-35; Technical Illustration, Thomas.

B. Read the following informational outline:

1. Definition of Trimetric Projection

   a. Trimetric means three measure.
   b. Scales are found by use of method of intersections.

      (1) All three angles are different.
      (2) All three axes are foreshortened differently.
      (3) Three scales must be found and used.

2. Method of Intersection

   a. Revolves true shape triangles into trimetric axes.
   b. Permits the adaptation of a freehand sketch into accurate trimetric.
   c. Permits the use of projection from orthographic views.

C. Practice the following operational steps:

1. Prepare freehand sketch to determine view desired.

2. Draw projections of the coordinate axes.

3. Draw triangles to represent intersection of coordinate planes with the plane of projection.

4. Revolve triangles into true shape planes.

5. Locate at least two orthographic views in right angle corners of appropriate true shape triangles.

6. Project trimetric drawing.

METHOD OF INTERSECTION

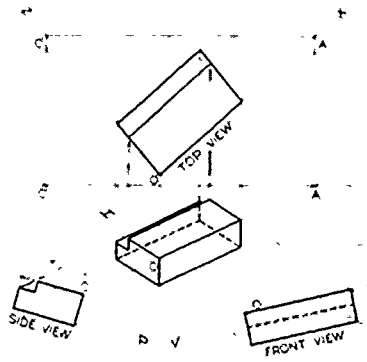

AXONOMETRIC PROJECTION

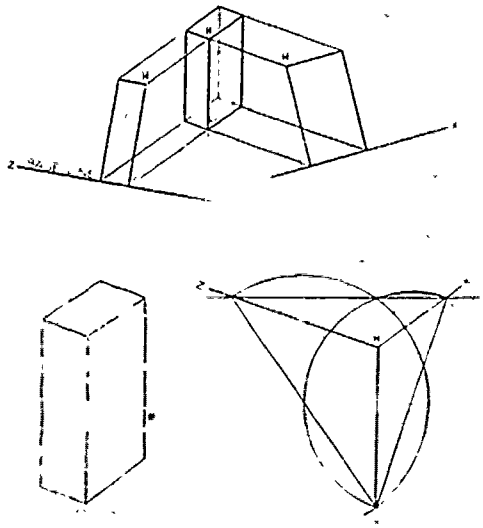

D. Criterion Performance Test

Complete one of the following drawings using the method of intersections. Compare the results with the similar dimetric and isometric drawing.

REFERENCE TEXT	ASSIGNMENT	RATING
Technical Drawing	Fig. 16-51, 1 Key Plate	
Engineering Drawing	Fig. 11-23 Plug	
Engineering Drawing & Design	Fig. 9.43 Lock Base	
Other assigned Text		

If you do not fully understand the axonometric concepts or have received less than an 8.0 average for all plates, review your errors, and see instructor for additional assignments before proceeding to next unit or lesson.

Unit on Perspective

Pretest:

Complete one of the following drawing assignments and hand in for evaluation. You must score a rating of 10 on each part, or work through the lessons pertaining to the determined deficiency.

Select one of the texts below and draw both a one-point and a two-point perspective of the object. You may assume a view which you feel will best illustrate the object. However, you should specify the exact location that you have assumed.

REFERENCE TEXT	ASSIGNMENT	RATING
Technical Drawing	Fig. 6-114	
Engineering Drawing	Fig. 7-36	
Engineering Drawing & Design (Part 1 - Base)	Fig. 7.60	
Instructor's suggested text		

Lesson 8: Definitions, Concepts, and Applications

Performance Objectives: Describe perspective and give specific characteristics of each type of perspective.

Given the specifications for an object, prepare one-point and two-point perspectives by use of the plan method to the established standards.

Learning Activities:

A. Read Architectural Graphics, Martin, Chapters 8, 9, 10; Technical Drawing, Giesecke et al., sections 18-1, 18-2, 18-3, 18-10; Engineering Drawing and Design, Jensen, p. 192.

B. Read the following informational outline:

1. Definition of Perspective

a. Perspective is central projection.

(1) Projections to picture plane converge at a point
(2) Approximates the view obtained by human eye

b. Perspective involves four main ingredients.

(1) Observer's eye

--Distance from object
--Height above object

(2) Object being viewed

--Parallel to picture plane-one-point
--Revolved-two-point
--Revolved and tilted-three-point

(3) Plane of projection
(4) Projectors from eyeball to object

2. Definition of Terms

a. Picture Plane (PP) - The plane upon which the observer's lines of sight are projected.
b. Station Point (SP) - The position of the observer.
c. Ground Line (GL) - The intersection of the ground plane and the picture plane.
d. Horizon (H) - A horizontal line drawn through the vertical height point of observation.
e. Vanishing Point - The point where the diminishing lines on the receding axis seem to meet.

PERSPECTIVE

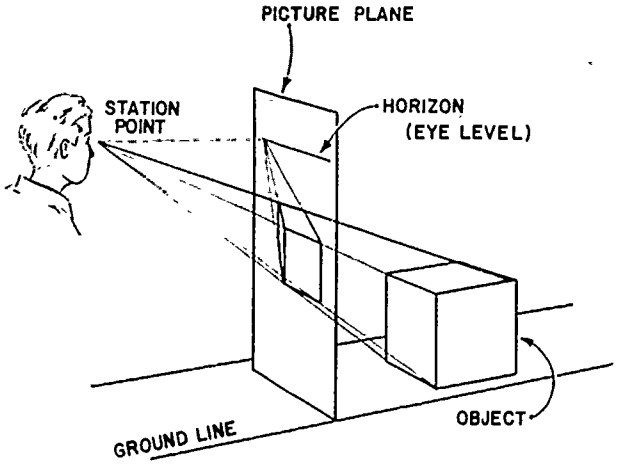

ONE POINT - Object is parallel to picture plane
TWO POINT - Object is revolved
THREE POINT - Object is revolved & tilted

3. Types of Perspectives

   a. One-point is used to give the illusion of great depth.
   b. Positioning of objects in one-point:

      (1) Principle plane of object is placed parallel to picture plane.
      (2) One-point perspective is the simplest method of creating perspective illusion.

         --It relies upon a basic understanding of orthographic projection.
         --It combines an orthographic picture plane with a diminishing, receding axis.

      (3) The position of the observer is from a finite distance.

(4) The viewer is assumed to be looking directly into the vanishing point.

ONE-POINT PERSPECTIVE

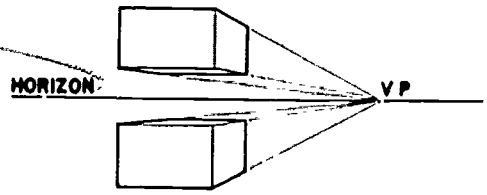

ONE FACE PARALLEL TO PICTURE PLANE

c. Two-point perspective is the most common method of illusion.
d. Positioning of objects in two-point:

(1) The vertical axis of the object is placed parallel to the picture plane.

--Permits easy access to a true height measure line
--This set of edges has no vanishing point

(2) The other planes of the object are inclined toward the picture plane.

--Creates two receding axes
--Two vanishing points

(3) The position of the observer is from a finite distance.

TWO-POINT PERSPECTIVE

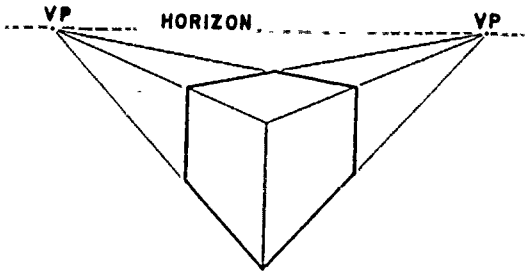

OBJECT IS REVOLVED WITH PICTURE PLANE

e. Three-point perspective is the least used method of illustration.
f. Positioning of objects in three-point:

(1) The object is revolved and tilted toward the picture plane.

--Used to represent height as well as width and depth
--Presumably prevents distortion

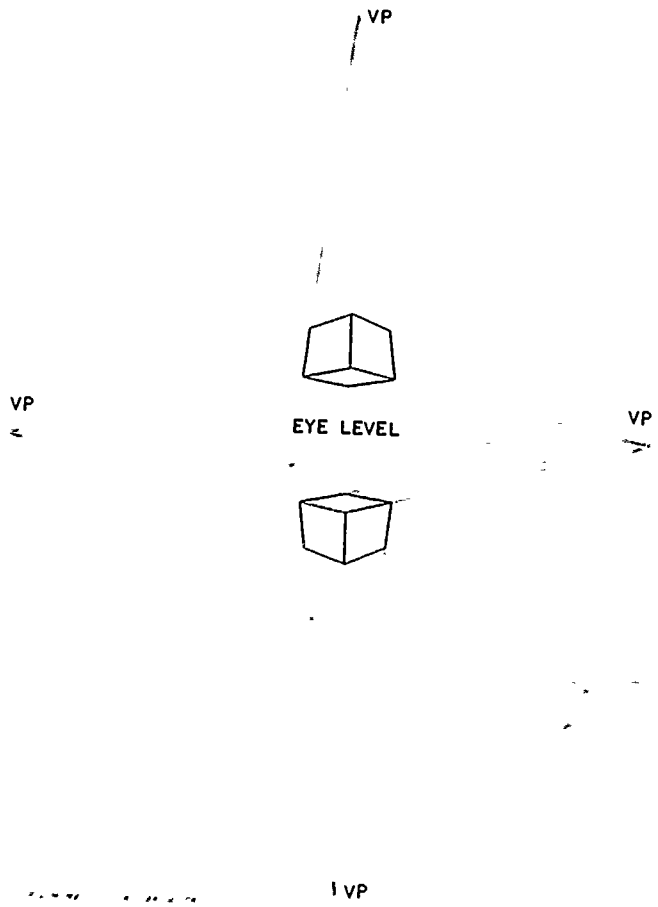

C. Practice the following operational steps:

1. One-point Perspective

a. Draw plan view of object near top of sheet.
b. Draw picture plane (a horizontal line).
c. Locate station point on plan view.
d. Extend a line at 45° from station point to picture plane.

NOTE: This piercing point will be used to determine the vanishing point in the perspective.

e. Extend a line at 45° from a corner of the object in the plan view to the picture plane.
f. Draw a vertical line from this point of intersection.

NOTE: This line will serve as the true height measure line.

g. Draw a horizon line.
h. Establish vanishing point (right) by projecting vertically from piercing point.
i. Locate ground line.
j. Locate center vanishing point by projecting a vertical line from the station point to the horizon line.
k. Construct perspective by projecting vertically from the intersections on the picture plane and projecting from the true height measure line.

ONE-POINT PERSPECTIVE

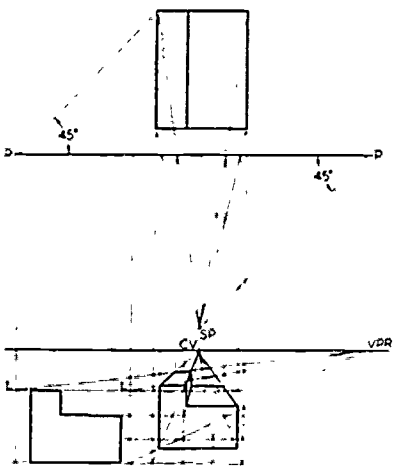

2. Two-point Perspective

a. Decide the type of perspective which will be most dramatic and informative for illustrating the object.

b. Examine elevations of the object to determine which side has the most detail and should be most exposed toward the viewer.

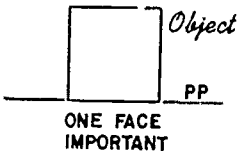

NOTE: This positioning would produce a one-point perspective as mentioned above.

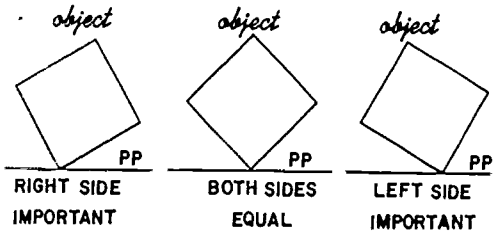

d. Draw plan on sheet in this desired position so that the above mentioned angle is formed by the receding side of the object and the picture plane.

CHECK POINT: In locating the plan, consider how much board space will be needed to locate the vanishing points. Draw the plan near the top of the sheet.

e. Establish picture plane (a horizontal line).

(1) The location of the picture plane will determine the size of the perspective.

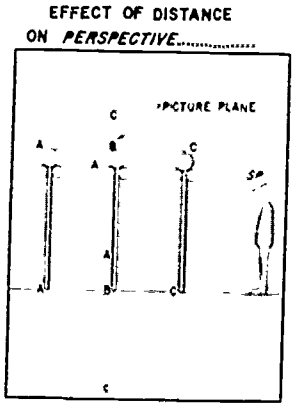

f. Locate station point on plan view.

(1) Determine the direction from which the object would best be viewed. This step works in conjunction with step # C, above as it is possible to show more or less of a side of the object by shifting the station point to the left or right of the true height corner after the plan has been set. This direction as then selected is considered to be the center of interest.

(2) Project a vertical line down from the picture plane at this center of interest.

(3) Determine the distance from which the object would best be viewed.

(4) Measure down to this distance and establish the station point.

CHECK POINT: The angle of vision as projected from the station point to the outer edges of the object must be sixty degrees or less in order to prevent distortion.

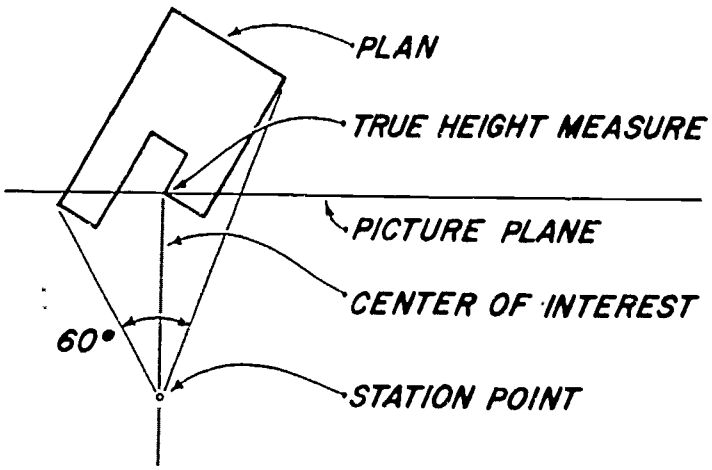

g. Pass lines through the station point, parallel to the sides of the object in the plan view, to the picture plane.

NOTE: These piercing points will be used to determine the vanishing points in perspective.

h. If the picture plane does not touch the object, project a line on the object until it touches the picture plane.

NOTE: This point will be projected down to serve as the true height measure line.

i. Draw an horizon line.
j. Establish vanishing points by projecting vertically from piercing points.
k. Project true height measure line door and establish perspective heights.
l. Construct perspective. Vertical heights are measured from true height measure line. Depth dimensions are projected down from the intersections of line radiating from the station point with the picture plane.

PERSPECTIVE OF A PRISM

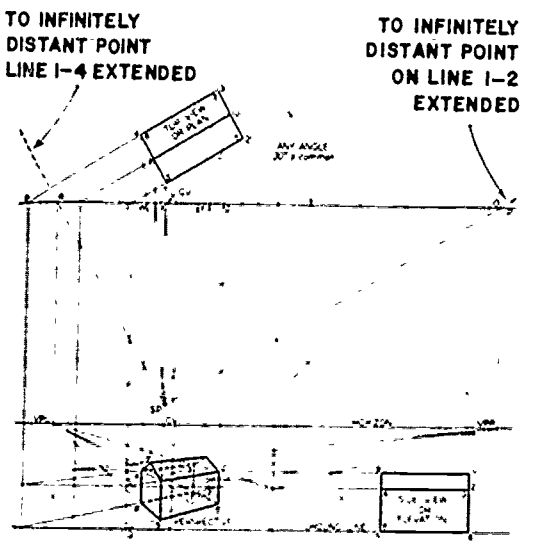

D. Criterion Test

1. Define:

   a. Station point
   b. Vanishing point
   c. Picture plane
   d. PPL
   e. PPR
   f. Horizon
   g. Ground line

2. How is the height from which the building is viewed determined?

3. How are vertical heights measured?

4. How are depths in perspective measured?

5. How does the distance of the station point from the picture plane effect the perspective?

6. What effect does the angle the plan assumes relative to the picture plane have on the perspective?

7. What happens if the station point is shifted to the left?

8. What are the limitations in selecting the location of the station point?

9. Complete the following job assignments as issued by your instructor, according to the text being used, and submit for evaluation. Write in any special instructions in blank reference space. Do one- and two-point perspectives of each assignment.

REFERENCE TEXT	ASSIGNMENTS	RATING
Technical Drawing	Fig. 18-28 18-29 18-30 18-32, 1 18-33, a	
Engineering Drawing and Design	Fig. 9.64 9.65 9.67 9.68 9.69	
Instructor's suggested text		

If you received a rating of 8.0 or above as an assignment average, proceed to the next lesson. If your average was less than 8.0 review your errors and complete the following assignments as issued by your instructor.

REFERENCE TEXT	ASSIGNMENT	RATING

192 END