DOCUMENT RESUME

ED 091 553 CE 001 324

TITLE	Industrial Ceramics: Secondary Schools.
INSTITUTION	New York City Board of Education, Brooklyn, N.Y. Bureau of Curriculum Development.
REPORT NO	Curr-Bull-1970-71-Ser-5
PUB DATE	[71]
NOTE	143p.
AVAILABLE FROM	Auditor, Board of Education of the City of New York, Publications Sales Office, 110 Livingston Street, Brooklyn, New York 11201 ($5.00)
EDRS PRICE	MF-$0.75 HC Not Available from EDRS. PLUS POSTAGE
DESCRIPTORS	Career Opportunities; *Ceramics; Courses; *Curriculum Development; Diagrams; High School Curriculum; *Industrial Arts; Lesson Plans; Research; *Resource Materials; Tests

ABSTRACT

The expanding use of ceramic products in today's world can be seen in the areas of communications, construction, aerospace, textiles, metallurgy, atomic energy, and electronics. The demands of science have brought ceramics from an art to an industry using mass production and automated processes which requires the services of great numbers as the field expands more. This document was designed as resource material for the secondary industrial arts teacher to expand his courses with suggestions on: teaching methods, student activities, lesson plans, tests, and related topics. The contents are organized in nine chapters with numerous illustrations, under the headings of: Organization, Shop Management, Clay Technology, Plaster, Cement, Glass, Mass Production, Guidance, and Testing, together with an appendix of sources of teaching materials. (DS)

INDUSTRIAL ARTS

ia

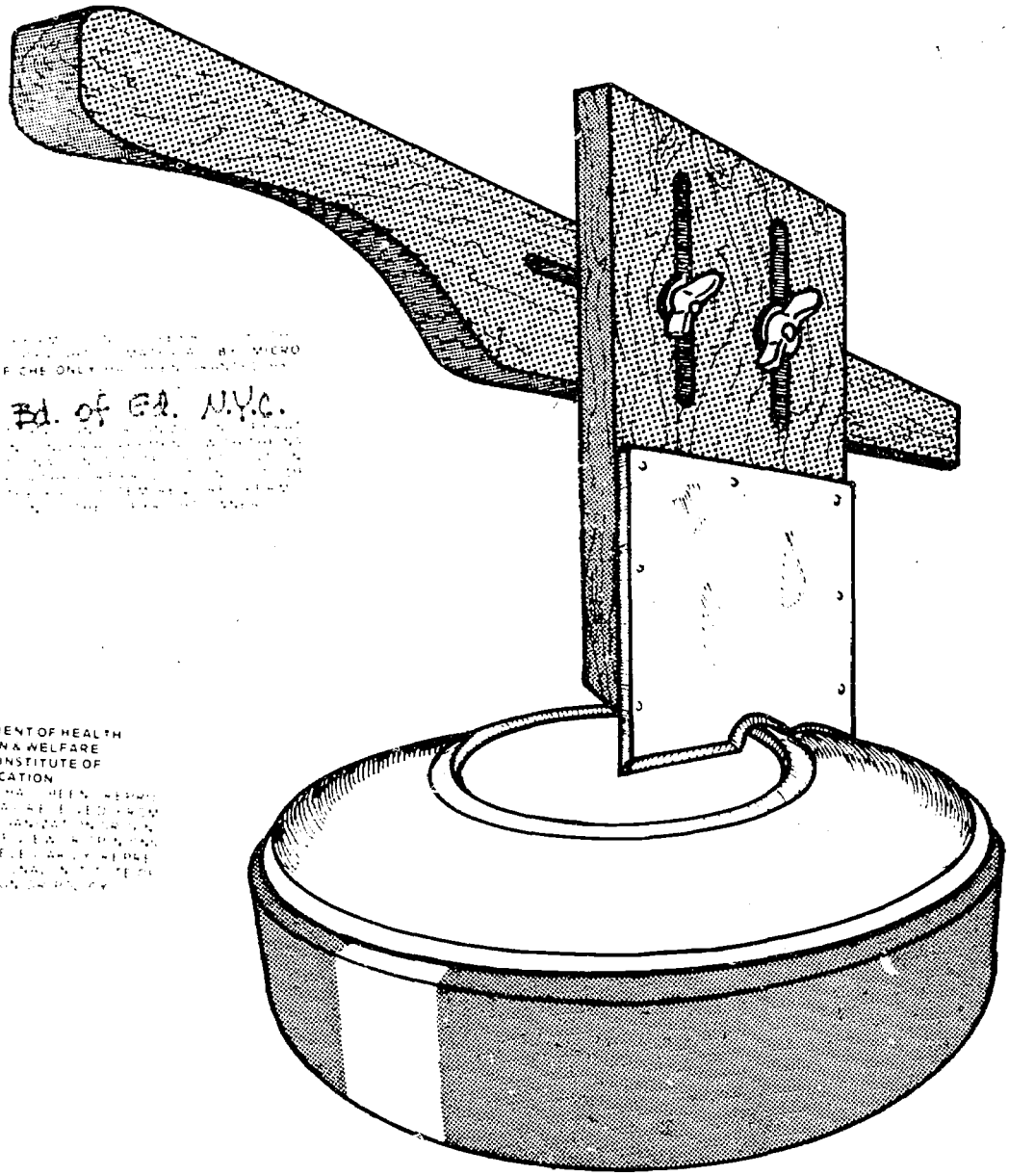

BUREAU OF CURRICULUM DEVELOPMENT
BOARD OF EDUCATION • CITY OF NEW YORK

00-5540-81

New York City public schools should order additional copies of this publication from the Bureau of Supplies. Curriculum Publications List No. 00-5540-81

Copies of this publication may be purchased by outside agencies from: Board of Education of the City of New York, Publications Sales Office, 110 Livingston Street, Brooklyn, N.Y. 11201. Checks should be made payable to: Auditor, Board of Education.

Price: $5.00

CURRICULUM BULLETIN • 1970-71 SERIES • NO. 5

INDUSTRIAL CERAMICS

SECONDARY SCHOOLS

BUREAU OF CURRICULUM DEVELOPMENT

BOARD OF EDUCATION • CITY OF NEW YORK

BOARD OF EDUCATION

FOREWORD

Ceramic materials have played a significant cultural role throughout the history of civilization. Ceramic artifacts, recovered from archeological excavations, attest to the material's early acceptance as a functional medium by many diverse cultures throughout the world. Ceramic substances continue in wide use today as evidenced by the numerous space age applications, ranging from missile cones to electronic components.

This resource bulletin was designed to assist the industrial arts teacher in implementing a course of study that reflects modern technological concepts and practices as they relate to the ceramics industry. The information contained should be useful to both the beginning teacher and the more experienced instructor because it presents many examples of student activities, lesson plans, tests, and related topics.

Through exploratory and prevocational experiences the student is directed to career opportunities, requirements, and rewards that exist in the ceramics industry. Practical suggestions are not only applicable to the teaching of basic skills and knowledge, but are also helpful in developing an appreciation of those contributions to society, both past and present, made by ceramics handicrafts and industry.

SEELIG LESTER
Deputy Superintendent of Schools

ACKNOWLEDGEMENTS

Industrial Ceramics was developed as a cooperative project of the Bureau of Curriculum Development, David A. Abramson, Acting Director, and the Bureau of Industrial Arts, Herbert Siegel, Director. Seelig Lester, Deputy Superintendent of Schools, provided overall supervision to the program.

The committee responsible for organizing the materials and writing the course of study includes: Robin W. Kazer, Assistant Director of Industrial Arts; Leo Nathan, Assistant Principal; and Thomas Gangi, Teacher of Industrial Arts. Additional contributions were made by Gerald Paris, Murray Penstein, Gerald Goldman, Seymour Teischer, Richard Knopf, and David Lubell.

Photographs were furnished by the Corning Glass Works, Glass Container Manufacturers Institute, Inc., and Baldwin Machine Works. Donald Pitkoff prepared the illustrations and designed the cover.

Arthur E. Golomb made many valuable contributions to the project and participated in the final editing of the manuscript. Edythe K. Kahn supervised the production of this manual. Eleanor Shea edited the manuscript and Ellwood M. White was responsible for the design of the bulletin. Daniel A. Salmon coordinated the project.

CONTENTS

PREFACE

From the earliest clay bowl fashioned roughly 10,000 years ago to present-day cermets, progress in ceramic production has kept pace with advancing civilization. Until relatively recent times, the field of ceramics was considered an art in which the production of ceramic ware was the result of accumulated empirical knowledge gleaned from century to century. Today, using scientific techniques, ceramists through application of quality control methods manufacture a wide range of ceramic products that are mass produced in millions of units, often by automated processes.

The demands of modern science for new and improved materials for use in jets, missiles, atomic reactors, metal-processing equipment, and industrial and residential buildings are being met by the ceramics industries. To cite one example, greater weights and speeds of jet-driven aircraft require high-temperature brake and clutch linings made from ceramic materials, while other ceramic substances have been developed for use as nonlubricant bearings, radar equipment, missile noses, nozzles, rocket thermal barriers, motor tube and ramjet tailpipe linings. Numerous other new ceramic products can be cited in the areas of communications, construction, aerospace, textiles, metallurgy, atomic energy, and electronics.

Recent growth in such scientific fields as crystallography and mineralogy has enabled the ceramist to gain insights and understandings concerning the potential of ceramic materials and to turn his talents toward the improvement of raw materials, processes, tools, and products. A survey of industry in the New York metropolitan area indicates that hundreds of manufacturers who produce ceramic products will require the services of great numbers of employees as the field expands.

1
Organization

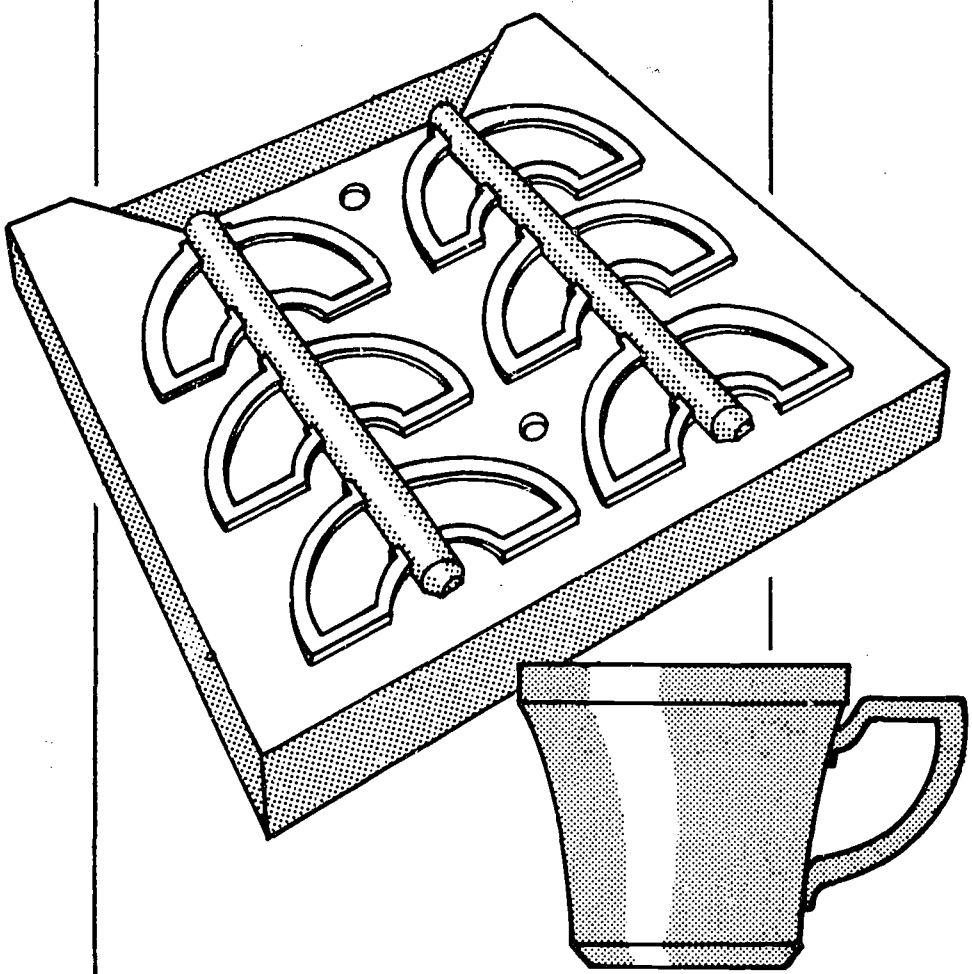

INTRODUCTION

This manual is intended to assist the secondary school industrial arts teacher in the industrial ceramics shop. It is designed as a reference for the teacher in preparing the term's work. The units of instruction in this manual contain demonstrations and related information, lesson plans, suggested project ideas, sample project sheets, references and visual aids, and safety procedures. The projects described are not required; they are offered as suggestions for implementing the course of study. Teachers should be encouraged to develop a variety of projects and to use materials and processes that are representative of the modern ceramics industry.

The objectives of the course are to be realized through a program of pupil project activities involving work at the individual, group, and mass production levels. The program is organized in four basic technological areas: clay, plaster, cement, and glass. The suggested term plan indicates the scheduling of project activities in which students are given the opportunity to cast clay, plaster, cement, and glass. Further activities involve glass sagging, glaze manufacture, ceramic decoration, clay jiggering, pressing, and extruding. In the mass production exercise, students engage in the actual planning, designing, material procuring, model making, tool and mold making, production runs, decorating, finishing, inspecting, packaging, and distributing of a mutually agreed upon project.

The term plan is designed for a class of not more than twenty-four students. The class is expected to meet for a minimum of five periods a week. The term is sixteen weeks in duration so that time lost because of holidays, testing programs, and other activities does not interfere with the proposed program.

The first two weeks of the term provide an opportunity for the teacher to introduce objectives of the course. This time is also used for class organization, management, and instruction in cleanup and safety.*

In addition, demonstration lessons in the various activity areas are presented during these two weeks. The next nine weeks are devoted to individual and group projects. Groups should be scheduled to engage in the activities in a manner which avoids conflicts and makes maximum use of the equipment on hand. A detailed explanation to illustrate the mechanics of arranging the program is included.

The final five weeks are devoted to the mass production experience. The teacher, by careful observation and recording during the preceding weeks, should be aware of students' abilities, attitudes, and special talents. The success of this mass production activity depends upon the assignment of capable students to key positions in the mass production activity.

ORIENTATION

The early lessons of the term include an introduction to the field of ceramics and stress the industrial and technological aspects of the multiphased field of industrial ceramics. Since most students have had experience with ceramic products and materials and may have had opportunities to create art objects from clay, glass, and plaster, a skillful teacher can use their firsthand knowledge as a springboard to introduce the industrial and technological aspects of ceramics. Any of several available films may be employed to motivate or to supplement the discussion which should cover the objectives, content, and plan of the ensuing term's work.

* Refer to these publications of the Board of Education, City of New York: *School Shop Safety Manual,* Curriculum Bulletin No. 13, 1964-1965 Series; *Industrial Arts Shop Management,* Curriculum Bulletin No. 9, 1964-65 Series.

It is necessary to organize the class so that the term plan can be successfully implemented. The actual organization should be preceded by a shop tour, so that the students are acquainted with the layout, location, and placement of the various areas of the shop and its furniture, equipment, tools, and materials.

To implement the recommended term plan, it is necessary to establish three groups, each with a specific designation. Each group is assigned a different activity, and activities are worked at simultaneously. Various student management arrangements are suggested in *Industrial Arts Shop Management.*

A cleanup system may be part of, or separate from, the management system. Cleanup activity must be carefully planned and carried out if a clean, unobstructed, and safe working climate is to be maintained.

In activities involving use of mechanical equipment, the safest working conditions possible must be maintained. The establishment of simple, effective rules of procedure can, when they are strictly adhered to, provide the optimum in safe working conditions. Reference to *Industrial Arts Shop Management* can help to establish such a program.

DEMONSTRATIONS

Introduction to the student project activity period should be preceded by a series of demonstration lessons to prepare students for their beginning activities. Demonstrations of general material preparation procedures, such as weighing, dry blending, mulling, blunging, screening, filter-pressing, pugging, and wedging should head the list. These should be followed by slip casting, jiggering, extruding, wet and dry pressing, glaze manufacture, and mechanical ceramic decoration.

Practically all ceramic materials and products are subjected to the intense heat of a kiln during some phase of their construction. In order to fire the projects successfully, procedures involving the use and care of the kiln should involve student participation. These procedures are explained in detail later; however, at this time the teacher outlines the plan to the class and demonstrates the techniques necessary to initiate this program effectively. Instruction sheets, data sheets, and checklists must supplement these demonstrations.

By referring to the Daily Group Schedule, p. 4, it can be seen that at this point, all demonstrations necessary to begin the nine-week Project Activity Period will have been presented. Subsequent demonstration lessons are scheduled so that they are presented in time to be of value to the group.

PUPIL ACTIVITIES

Projects

One period each week should be reserved for demonstrations and related information lessons for the entire class. In this schedule 36 periods for nine project areas (4 periods per week) have been allotted. Slip casting, jiggering, and pressing have been allotted 4 periods each. This allotment provides sufficient time for material preparation, shaping (in existing molds), fettling, controlled drying, and optional surface decorations. Two periods are allotted for the compounding of glazes, and an additional 3 periods are to be used for the application of these glazes. Two periods are also used for clay extruding, which will involve preparing the clay body, shaping it mechanically, and firing it. Three periods are provided for students to develop and use a mechanically applied design, such as a rubber stamp, stencil mask, silk-screen stencil, or decal. A cement unit, which includes planning, designing, form building, material preparation, casting, finishing, and curing has been assigned 4 periods. In the area of glass fabrication, 2

projects, each requiring four periods, are included. One project is glass sagging. The other involves the fabrication of glass from raw materials which are melted and then cast in a suitable mold to form the finished glassware. The nine weeks of project activities include one period for project assembly and one period for testing.

Mass Production

The final weeks of the term are devoted to a mass production program. (Refer to unit on mass production.) As a culminating activity, the mass production activity should approximate actual industrial procedures. With the knowledge and experience gained in the preceding eleven weeks of individual and group ceramic work, students can successfully carry out the complex activities of the mass production project.

TERM PLAN

DAILY GROUP SCHEDULE - 16 WEEKS

		1	2	3	4	5	6	7	8	9	10	11	12	13	14	15	16
RED	Mon.	INTRODUCTION - ORIENTATION	DEMONSTRATION LESSONS	A	K/M-F	E	B	R/D/L	G	G	K/M-I	H					
	Tues.			R/D/L	K/M-F	E	B	K/M-D	R/D/L	I	K/M-T	H					
	Wed.			A	R/D/L	E	B	K/M-D	G	R/D/L	K/M-H	P/A	Mass Production				
	Thurs.			A	K/M-C	R/D/L	B	K/M-D	G	I	R/D/L	T					
	Fri.			A	K/M-C	G/T	R/D/L	K/M-D	G	I	K/M-H	R/D/L					
YELLOW	Mon.			B	E	K/M-F	G/T	R/D/L	K/M-I	I	H	K/M-G					
	Tues.			R/D/L	E	K/M-C	D	A	R/D/L	H	G	K/M-G					
	Wed.			B	R/D/L	K/M-C	D	A	K/M-G/T	R/D/L	G/T	K/L-P/A	Mass Production				
	Thurs.			B	E	R/D/L	D	A	K/M-I	H	R/D/L	K/M-T					
	Fri.			B	F	K/M-D	R/D/L	A	K/M-I	H	G	R/D/L					
BLUE	Mon.			K/M/D	C	E	K/M-A	R/D/L	H	K/M-H	G	I					
	Tues.			R/D/L	C	F	K/M-G/T	B	R/D/L	K/M-G	I	I					
	Wed.			K/M-D	R/D/L	F	K/M/A	B	H	R/D/L	I	P/A	Mass Production				
	Thurs.			K/M-D	E	R/D/L	K/M-A	B	H	K/M-G	R/D/L	T					
	Fri.			K/M-D	E	A	R/D/L	B	G/T	K/M-G	G/T	R/D/L					

R/D/L Related Lesson or,
R/D/L Demonstration Lesson
A - Slip Casting
B - Jiggering
C - Extruding
D - Pressing
E - Decorating
F - Glaze Manufacture
G - Glass Sagging
H - Glass Casting
I - Cement Casting
K/M - Kiln Maintenance
G/T - Glaze Time
P/A - Project Assembly
T - Testing

2 Shop Management

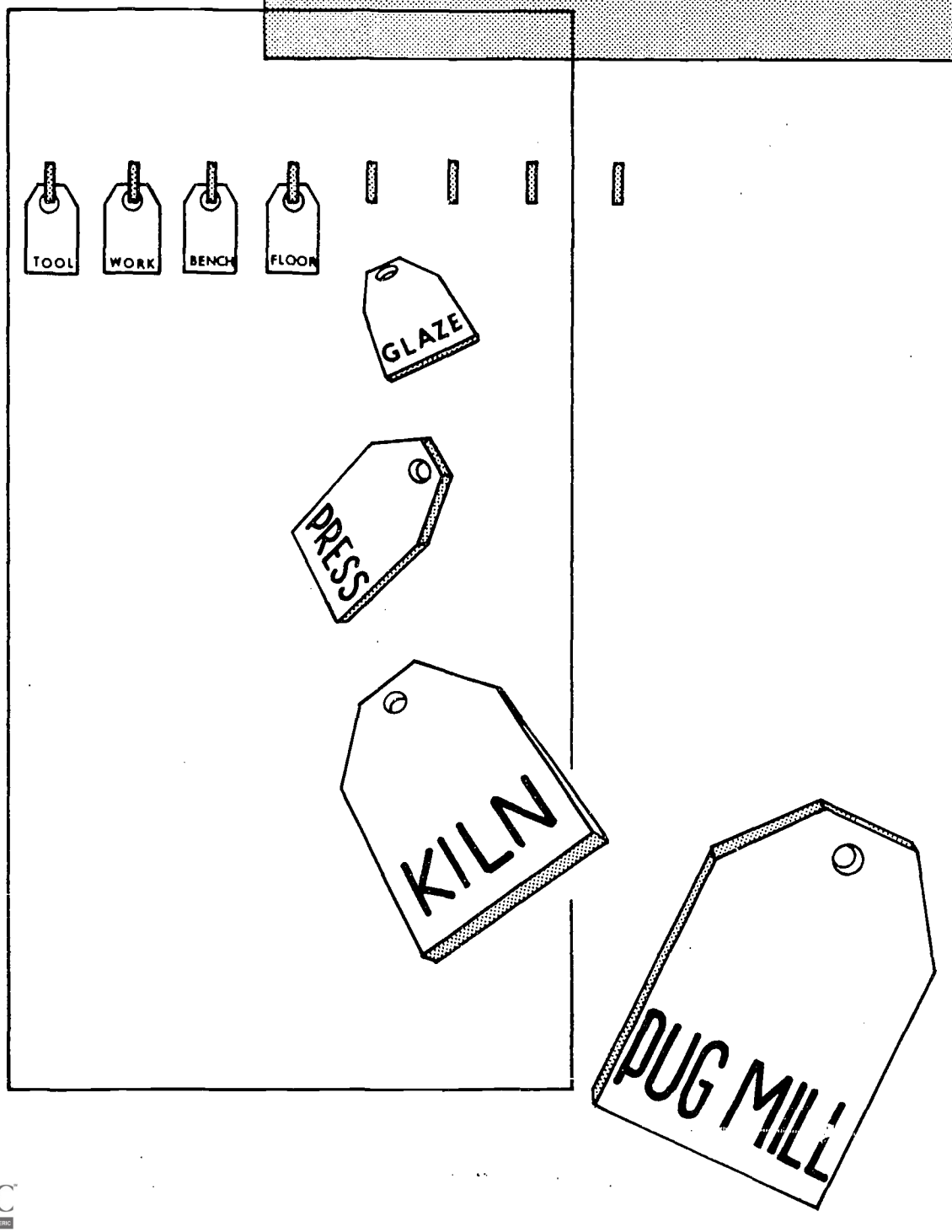

The management of a ceramics shop, like any other, must be carefully and thoroughly planned and executed. Various management procedures which can be utilized in a ceramics shop are presented in *Industrial Arts Shop Management*. There are, however, some areas of management that are unique to a ceramics program. Suggestions follow to assist the teacher in establishing a shop management procedure.

Use and Maintenance of the Kiln

Students are responsible for all aspects of kiln use in the firing procedure. This includes stacking or loading the kilns, actual firing, keeping firing data, unloading, maintaining kiln and kiln furniture.

In relation to the class organization, it is recommended that each group alternate responsibility for all kiln activity, for three of the nine weeks of the activity schedule. (See Daily Group Schedule, p. 4.) Since there are only four work sessions per week, two different students from the group are responsible for kiln activity each day.

Firing of clay and glassware should, for the most part, be done on a collective basis. When they are ready for firing, projects should be stored on specially designated racks according to temperatures required. The two-man squad then stacks all projects requiring the same temperature in a kiln. When the kiln is filled, the squad, at the direction of the teacher, commences the firing. Since the required firing time may span many hours, succeeding classes have to tend a firing initiated by a previous class. To coordinate the firing, a data sheet, mounted on the kiln itself, is required. The Kiln Data Sheet, p. 7, should indicate the kiln in use, the type of ware being fired, the number of pieces, the cones in use, the maturing temperature desired, the settings of automatic controls, the date, the time firing is initiated, a time-temperature graph for recording the firing curve, and a blank area for recording results or special remarks. Entries should be made each period by the squad on the data sheet of any kiln being fired.

When no stacking or drawing is required, the squad should be engaged in maintenance activities. The removal of glaze drippings from kiln surfaces, shelves and posts, application of kiln wash, storage of kiln furniture, and some repairs may all be considered kiln maintenance activities.

Careful, simple, direct, and thorough instruction, augmented by the use of printed instructions and checklists, and most important, careful supervision, can free the teacher from a time-consuming activity and still result in a successful firing program.

Project Identification

Whenever individual projects are constructed by students, the problem of identification must be carefully considered. In ceramics, the project may go through a series of different processes which change the nature of the material. It is therefore imperative that the identification be discernible in each process. Following is a recommended system which can be used for the identification of clayware.

An identification mark should positively identify the student and the group in which he is working. The group or class identity can be established by the arbitrary assignment of a letter of the alphabet and made more specific by adding the term during which the class meets (e.g., AS 71 for group A, spring 1971). The student's last name and initial of first name completes the identification.

A plastic tape label maker, equipped with a reverse image wheel may be used to make an adhesive-backed tape with raised letters in reverse. This adhesive label is then mounted as two lines on a small wood block. The block should have a hole through it so that it can be hung from a nail or pin on a class

Kiln Data Sheet

		Switch Positions		
Kiln # _____	Time	1	2	3
Ware being fired _____	_____			
Number of shelves _____	_____	*	*	*
Number of pieces _____	_____	*	*	*
Maturing temperature _____	_____	*	*	*
Pyrometric cones ____ ____ ____	_____	*	*	*
Pyrometer cut-off setting _____	_____	*	*	*
Date loaded _____	_____	*	*	*
Date emptied _____	_____	*	*	*
		*	*	*

TIME / TEMPERATURE CHART

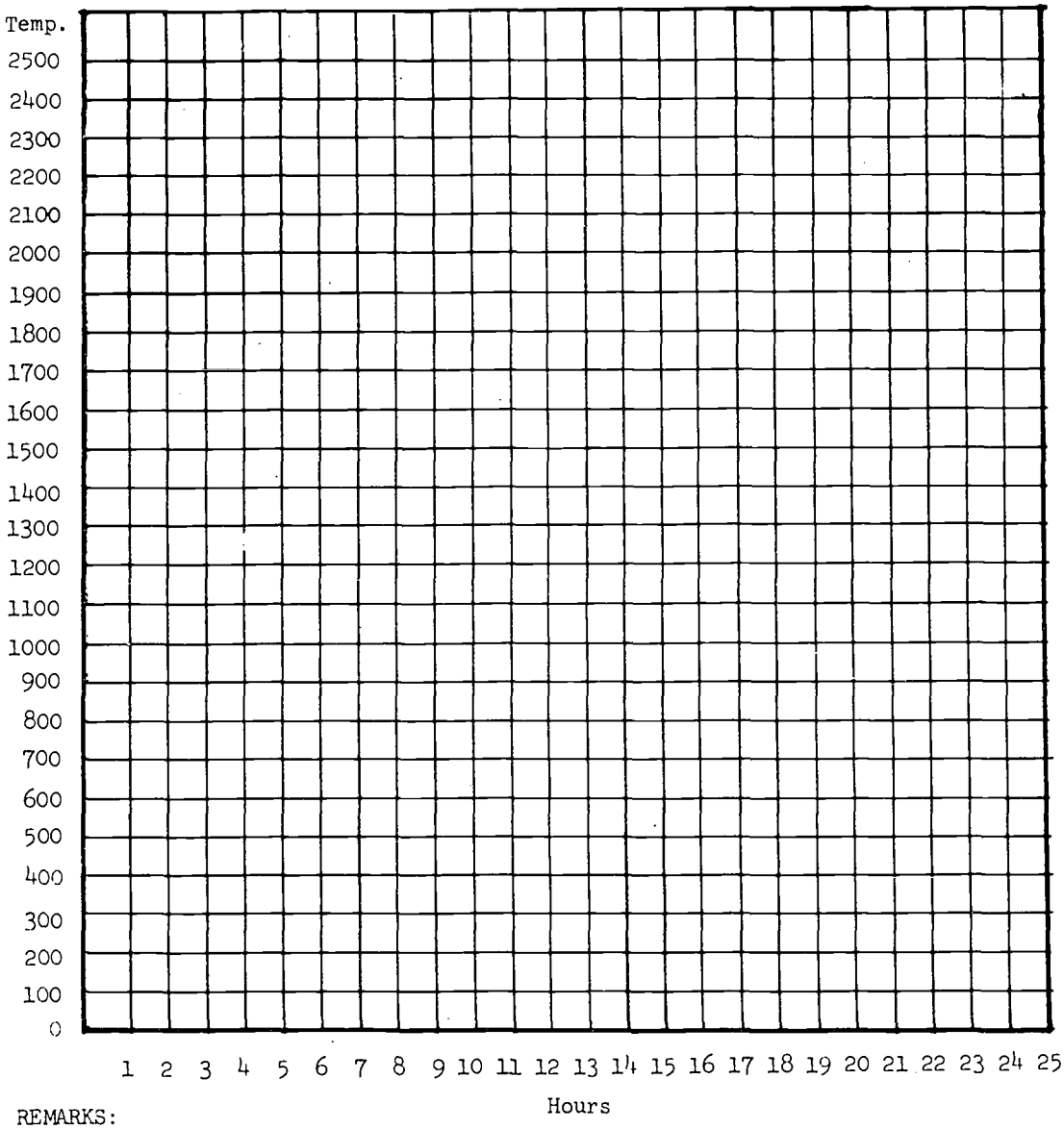

REMARKS:

board. Another adhesive label providing the same information, but with letters in normal position, is used to identify the block itself. This assembly of block and tape becomes an individual identification stamp which will serve to impress a clearly legible identification mark on plastic or leather-hard clay. To prevent obliteration of the mark by glaze, the mark should be covered with water-soluble wax (wax resist), prior to any glaze application. During the firing of the glaze the wax burns away; any glaze which may have covered the wax falls away from the clay surface, leaving the identification mark.

When the stamp cannot be employed because of the shape or condition of the clay, identifying characters should be scratched into the clay so that they are clearly visible.

Fire resistant marking solutions (e.g., technical glass-marking ink) are available for identifying bisqued ware and glassware. These can be readily applied with a pen or fine lettering brush. Protection from subsequent overlayed application of glaze can, once again, be assured through the use of soluble wax over the identification mark.

Storage of Materials and Projects

In storing materials and projects in a ceramics shop one must take into consideration the physical and chemical changes these materials undergo during the construction of projects. Ceramic materials before shaping may be liquid, plastic, dry powder, or solid (for example, slip, glaze, clay, cement, and glass).

To maintain these materials in their proper state, a variety of storage facilities must be available. For proper storage of hygroscopic powdered materials such as plaster, cement, clay, and other chemical components, moisture-proof bins and containers are required. Other rustproof, airtight containers are necessary for the storage of liquids or slurries such as slip, glaze, and various decorating materials.

During processing, plastic clay objects may have to be kept in a plastic condition for extended periods of time. These objects require the use of airtight, rustproof, and moisture-conditioned damp closets for storage. On other occasions, shaped plastic clay requires immediate, controlled drying. This drying can be accomplished with the use of heat and ventilation. In other situations, clay, glaze, cement, and plaster objects must simply air dry in protected conditions. Wire enclosed steel racks, having perforated or expanded metal shelves with doors and latches, provide proper storage conditions for this type of ware.

Clay Technology 3

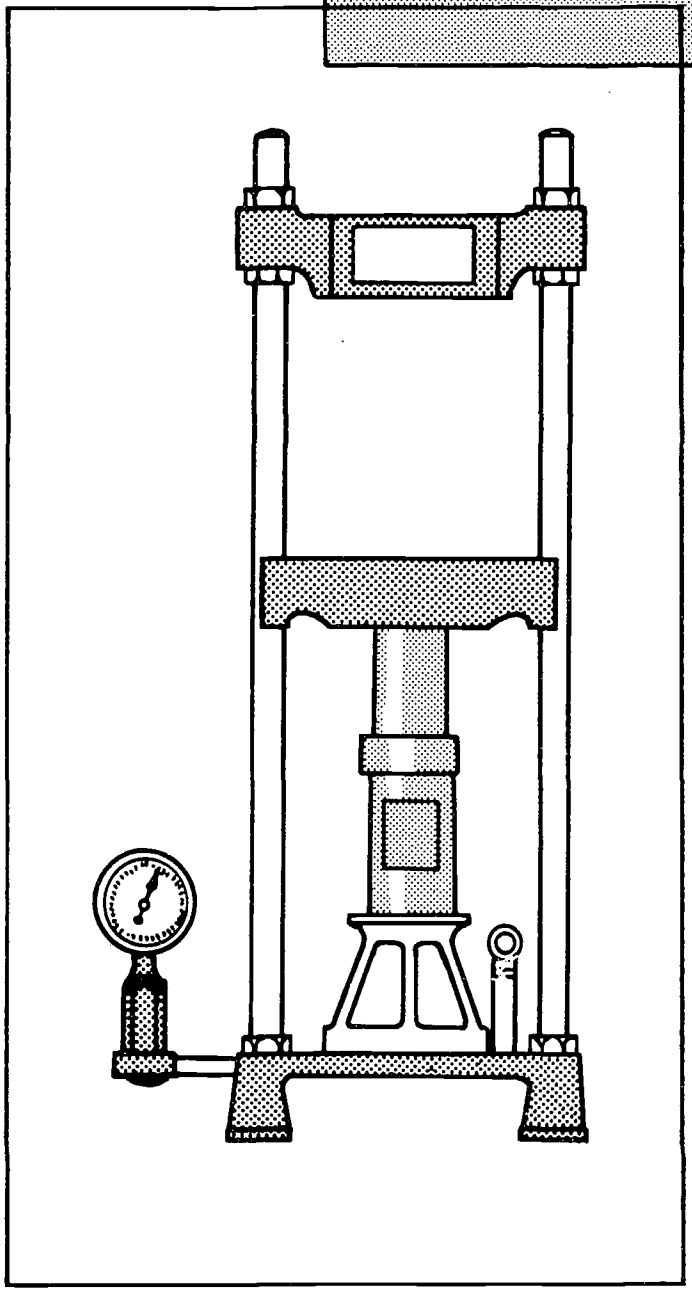

Designing, shaping, decorating, glazing, and firing clay objects in kilns form the content of this area. These processes are representative of those employed by the ceramics industry, which employs ceramic engineers, technicians, designers, mechanics, and operators of special equipment in the production of goods necessary for daily life.

In this area opportunity is provided for students to work with equipment basic to the industry. The area also offers students the opportunity to engage in cooperative activity with other class members.

Many of the skills learned in the clay area are fundamental and can be used in other areas of the ceramics shop. The manufacturing processes are similar for ceramic jewelry, ashtrays, plates, tiles. The correct procedure for making an underglaze decal for bisque ware may be used to advantage when making decals for glass decoration. The techniques in working with clay may also be used in other areas such as mold making, glass making, and cement producing.

This unit contains suggested projects and processes which make use of the skills and concepts developed in the course. Work in the clay area includes use of skills and concepts taught in science and math classes, as well as in other industrial arts classes.

CLAY PROCESSING

Demonstrations and Operations

Using scales for weighing ceramic ingredients
  Metric Avoirdupois
Blunging clay slip
Using heavy fluids hydrometer
Screening clay slip, using vibrating screen
Converting slip to plastic clay (filter pressing)
Pugging plastic clay
Mulling clay bodies for pressing
Milling ceramic bodies
Wedging
Reclaiming dry clay (crushing)

Related Topics

Removal of impurities
Deflocculation of clay slip
Conversion of slip to plastic clay
De-airing of plastic clay
Dry blending of clay bodies
Origin of raw materials
Properties of raw materials
Sources of raw materials
Industrial history of clay processing
Occupational information

Suggested Projects

Processing local clays
Clay comparison tests
Blending an original clay body
Preparation of grogged clay body
Preparation of slip

Safety Procedures and Precautions

Familiarize all students with the operating hazards of the equipment involved.
Establish operating procedures for safe handling of all materials and equipment.
When equipment involves the use of moisture, make certain that a grounded electrical connection is used.
Take precautionary measures to prevent the generation and accumulation of clay dust.

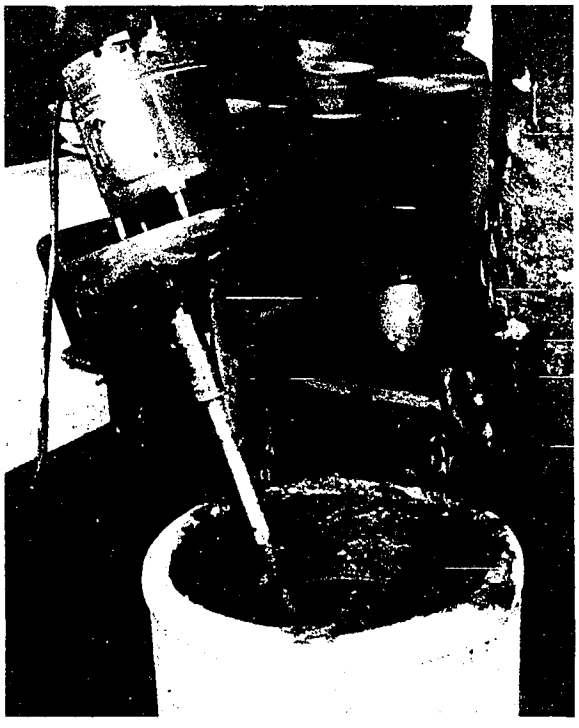

Using blunger to mix slip

Pouring slip into filter press

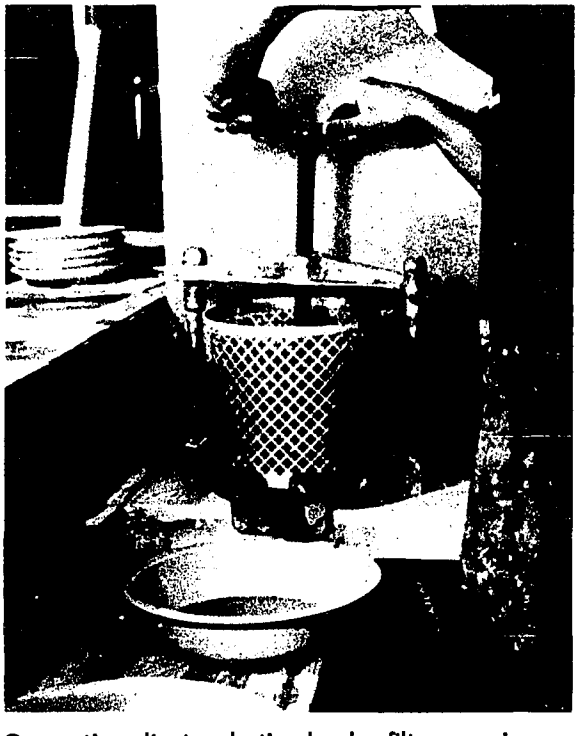

Converting slip to plastic clay by filter pressing

Reclaiming dry clay by pulverizing

ENRICHMENT

Make an original clay body for ram pressing a decorative clay tile.

COMPOUNDING A CLAY BODY

The following are the materials and quantities suggested for preparing the clay body needed to press a decorative tile.

Red art clay	3 lbs.	Ball clay	1 lb.	Vermiculite	¾ lb.
Gold art clay	3 lbs.	Fire clay	2 lbs.	Water	1 lb.

REFERENCES

(For complete bibliographic information, see p. 130.)
Norton, F. H. *Ceramics for the Artist-Potter.*
Roy, Vincent. *Ceramics.*

Films

Bridging the Century. Modern Talking Picture Service, 3 E. 54 St., New York, N.Y. 10022.
Making of Wedgwood. Modern Talking Picture Service, 3 E. 54 St., New York, N.Y. 10022.
Potters. Communications Division, State Education Dept., Albany, N.Y. 12224.

CLAY BODIES — Related Information Sheet

The potter or ceramist is frequently called upon to alter the properties of a clay body so that the clay fulfills the requirements of a particular job. Three properties are desirable for successful clay work: plasticity, porosity, and density (vitreosity) after firing.

Plasticity of clay means that clay offers no obstacle to the forming process. This requirement varies from job to job. A sculptor, for example, requires far greater plasticity in a clay body than someone shaping clay by ram pressing. Plasticity is imparted with the addition of fine-grained clay. Ball clays, which also strengthen dry ware, are generally used to increase this characteristic.

Porosity of clay means its capacity to expel gases and steam generated during the firing process. If the clay offers no avenue for gases to escape, the ware blows up when the pressure within the clay piece becomes great enough. While slow firing prevents the building up of excessive pressure, the potter frequently introduces grog, flint, or coarse-grained clay to achieve greater porosity. Adding grog to a clay body offers great decorative possibilities as well, because it comes in coarse-grained and fine-grained textures and in varied colors. Porous clay has good insulating characteristics; for instance, a cup made of porous clay holds the heat of its contents much longer than one which is not porous.

When clay is fired to the point that it is vitreous (glasslike), many of the materials within have fused, and the air spaces have collapsed. The ware becomes stronger and more watertight, but it loses insulating qualities. Pottery used for food handling should certainly have the property of vitreosity. If a container is porous or has a crackled glaze, it can make the container difficult to clean and thus can harbor decayed food.

Density is increased by heating clay to its fusing point. The fusing point of clay can be reduced by adding lower-melting glass formers, known as fluxes (e.g., nepheline syenite), to the body. The fusing point can be raised by adding flint or fire clay.

JIGGERING

DEMONSTRATIONS AND OPERATIONS

Designing for jiggering
Making the jiggering templates
  For cutting the plaster mold
  For shaping the plastic clay
Using the jigger template to cut a plaster mold
Setting up a jigger machine
Preparing and preshaping clay
Jiggering clay
  Hollow ware: cups, bowls
  Flatware: dinner plates
Fettling and drying jiggered ware

RELATED TOPICS

Industrial history; the potter's wheel
Occupational information
Organization for mass production
Automated jiggering
Industrial insulators
Industrial techniques for preshaping clay for jiggering
Use of relief decoration on jiggered ware

SUGGESTED PROJECTS

Flatware: saucers, dinner plates
Hollow ware: bowls, cups, soup plates

SAFETY PROCEDURES

Use only grounded electrical connections.
Make certain that all machine parts function prior to use.
Establish procedure checklist. Require that it be followed.
Make certain that all belting and gearing of machines have adequate safeguards. Check periodically.

ENRICHMENT

Make a jiggered plate with a decoration in relief.

REFERENCES

Ceramics Project Ideas for Industrial Arts. Albany, N.Y.: State Education Dept., 1966. Ch. 3, "Forming on the Wheel."
Norton, F. H. *Ceramics for the Artist-Potter.*
Roy, Vincent. *Ceramics.* Unit 10, "Forming a Piece on the Jigger."

Film

Treasures for Your Table. Universal 16, 221 Park Ave. So., New York, N.Y. 10010.

Chart

Steps in China-Making. Syracuse China Corp., Syracuse, N.Y. 13201.

JIGGERED PLATE — Project Plan

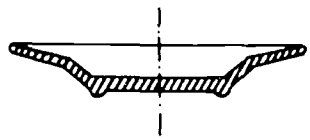

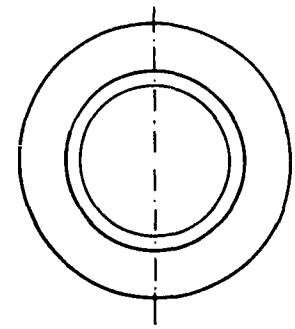

Industry uses jiggering as a technique for the mass production of plates, saucers, cups, and bowls. Jiggering is the mechanical forming of concentric clayware, the profile of which permits the release of clay from a one-piece hollow or domed plaster mold. Spinning plastic clay is shaped when it is forced against a mold surface by a shaping tool on a jiggering machine. The profile-shaping tool is fastened to a hinged jigger arm which moves in a vertical plane directly over the center of the machine. The jigger machine has a head equipped to hold either flatware (domed) molds for shaping shallow dishes or hollow ware (cavity) molds used to produce deep ware, such as cups and bowls.

MATERIALS

Thoroughly wedged plastic clay	Canvas	Water

TOOLS AND EQUIPMENT

Flatware jigger mold	Clay batter	Fettling knife
Profile-shaping tool	Steel spatula	Sponge
Jigger machine	Spray bottle	

PROCEDURES

1. Set plaster plate mold on wheel head, which must not move when it is positioned. Dampen the mold surface, slightly, using a wet sponge.

2. Adjust the jigger arm height when it is fully depressed. It should be parallel to the wheel head when it rests against its stop.

3. Locate and fasten the profile-shaping tool securely to the jigger arm. A space equal to the desired thickness of clay should remain between the mold surface and the tool.

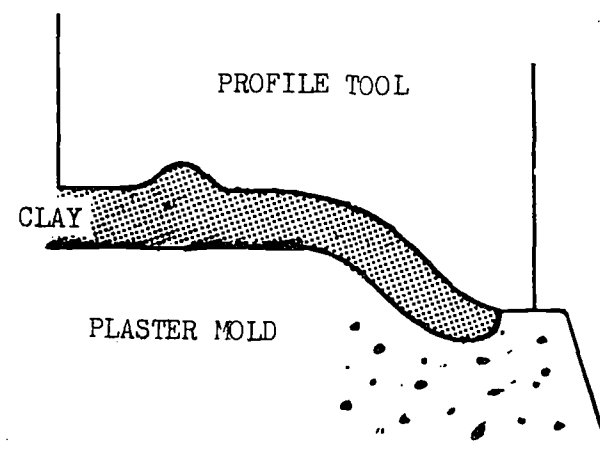

Note: Position of the profile-shaping tool is critical. When it is viewed from above, the tool should be located at the 12 o'clock position in relation to the wheel head and mold. The mold and clay spin in a counterclockwise direction. That portion of the shaping tool which forms the clay is wedge-shaped so that it forces clay down against the surface of the plaster mold. The trailing edge of this tool and the face of the jigger arm should be over the dead center of the mold.

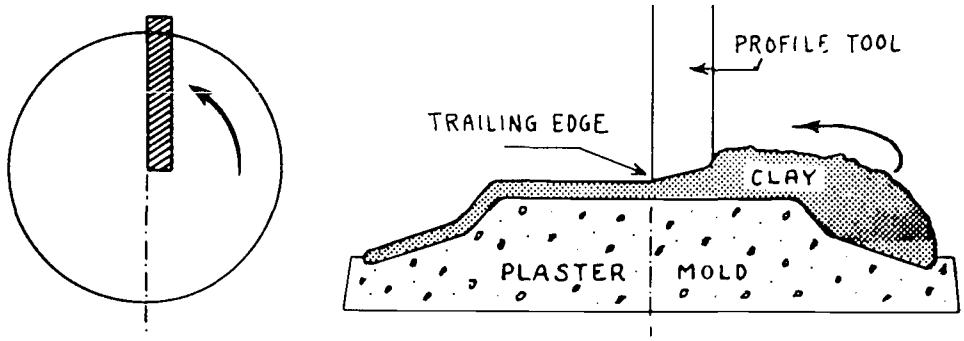

4. Raise arm and its attached tool clear of the mold.
5. Flatten plastic clay into a slab of uniform thickness. Work on canvas cloth. Use batter to flatten clay.
6. Smooth upper surface of clay slab with steel spatula. Remove slab from canvas.
7. Forcibly slam the flat slab of clay, smooth surface down, onto the mold surface. Slamming assures adhesion and prevents entrapment of air between the clay and the mold surface.
8. Trim excess clay from around outer edge of the mold, using the fettling knife.
9. Start machine causing clay to spin.
10. Spray water onto clay surface.
11. Depress jigger arm slowly, forcing tool onto clay. Squeezing action of tool and mold shapes spinning clay and forces excess over edge of the mold. Additional water should be used as needed since friction dries the clay surface during this operation.
12. Use fettling knife around outer edge of the mold to trim excess clay.
13. Sponge trimmed edge.
14. Stop spinning of machine.
15. Remove mold from wheel head and permit clay plate to dry.
16. Clean machine and all equipment thoroughly.
17. When clay dries, shrinks, and is released from the mold, remove the plate and treat it as any piece of clay greenware.
18. For volume production repeat procedure with identical molds.

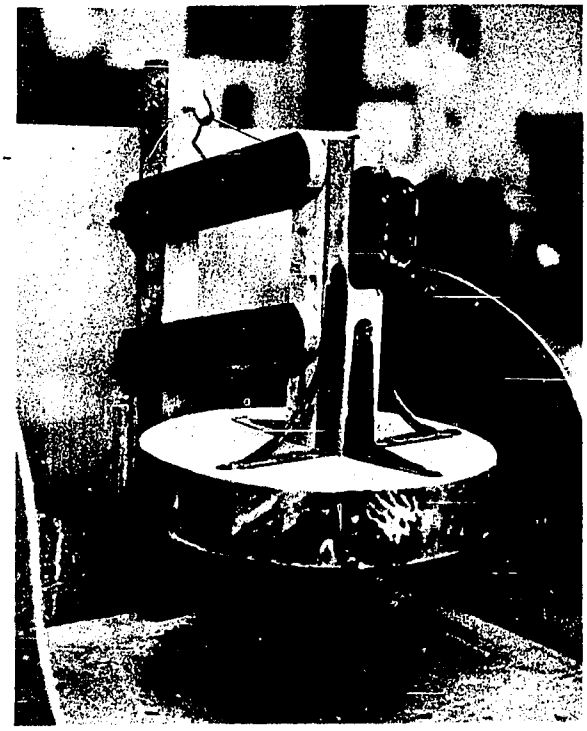

Batter device for making clay slab for jiggering

SLIP CASTING

DEMONSTRATIONS AND OPERATIONS

Designing a bowl, vase, dish, or crucible
Making the model
Making the mold
Preparing the slip
Pouring the casting
Drying of mold and casting
  Use of infrared or other heat source
  Removal of casting from mold
Fettling greenware (preparation)
Making appendage or relief decoration
Attaching appendage

RELATED INFORMATION

Industrial organization (mass production—use of gang molds, etc.)
Occupational information
Various casting bodies and their properties
Color decoration in molds
Use of multicolored slips

SUGGESTED PROJECTS

Cup
Mug
Vase
Bowl
Candy dish
Crucible

SAFETY

Care of molds
Handling of slip
Disposal of waste plaster
Cleaning of tools

ENRICHMENT

Make a gang mold.

Testing specific gravity of slip mixed in a blunger with a heavy fluid hydrometer

REFERENCES

Kenney, John B. *Complete Book of Pottery Making.* Ch. 6, "Slip-Casting."

Roy, Vincent. *Ceramics.* Unit 12, "Cooling from a Mold."

Film

Making of Wedgwood. Modern Talking Picture Service, 3 E. 54 St., New York, N.Y. 10022.

CRUCIBLE — Project Plan

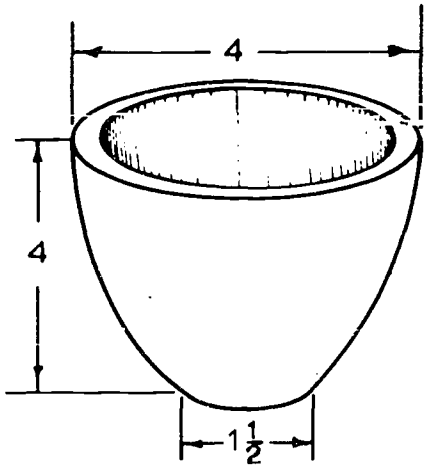

MATERIALS

Na_2CO_3		8 Gm.
"N" Brand Sodium Silicate		24 Ml.
Calgon		8 Gm.
Water		6 Liters
Crucible Batch		
Kingsley Kaolin	6.4 Kg.—40%	
Silica (Flint)	2.4 Kg.—15%	
Keystone Feldspar	2.4 Kg.—15%	
Imperial Ball Clay	4.8 Kg.—30%	
		16.0 Kg.

This slip-casting project is designed to utilize several operations and processes that are common to other areas of instruction in the course. These completed crucibles may be used for the melting of glass in the glass-casting unit, or for the preparation of cullet or frit.

Because many variations of this design are possible, it may be used as a cup or cigarette holder. This, of course, will mean that a casting slip, other than the one herein described, will have to be prepared.

PROCEDURES

A. Preparing the Slip

1. Dissolve the deflocculants (Na_2CO_3, sodium silicate, and calgon) in 200 ml. of water.
2. Stir with an electric mixer.
3. Pour the remaining water into a bucket and slowly add kaolin, flint, feldspar, and ball clay so that no lumps are formed.
4. Stir as material is added.
5. Add deflocculant when mixture becomes too thick to stir.
6. Continue stirring with mixer until entire batch is smooth.
7. If clay shows a tendency to settle out, add a *small* amount of sodium silicate.
8. Pour slip through 20-mesh screen to remove lumps and foreign material.

B. Making the Crucible

1. The model may be made by means of a sled, potter's wheel, or turning box (refer to unit on plaster).
2. Size model.
3. Pour the plaster mold, and allow it to dry after model has been removed (refer to unit on plaster).
4. Pour casting slip onto top of mold.
5. When wall of crucible is ⅛" thick, pour out excess slip.
6. Invert mold and permit excess slip to drain.
7. Place mold under infrared lamps.
8. Remove crucible after it has shrunk away from wall of mold.
9. Fettle top edge with a knife, and smooth with a sponge.
10. Permit crucible to dry.
11. Place in kiln and fire to cone 13.

DRY RAM PRESSING

DEMONSTRATIONS AND OPERATIONS

Designing a die provision for knockout of pressing
Making a die (metal, plastic metal, or wood)
Setting up dry press
  Mechanical
  Hydraulic
Preparing dry pressing body
  Dry blending
  Sieving
  Mulling
Dry Pressing
  Lubricating die with mold release
  Filling die
  Remove excess material
  Pressing material
  Ejecting the pressing
  Handling the pressing
Stacking the kiln
Firing the kiln

RELATED INFORMATION

Safety rules and practices in dry pressing
Jobs in industry—diemaker, ram press operator
Industrial applications of dry pressing
  Use of chemical binders
Commercial production of ferromagnetic materials
Industrial application of cermets in aerospace research

SUGGESTED PROJECTS

Ceramic magnets
Coaster
Tile
Checkers
Sharpening stone

SAFETY

Safety in the use of the mechanical equipment
Safety in the use of the dies and molds
Dust control in dry pressing

ENRICHMENT

Compare quality of sharpening stones made by altering material composition.
Construct mold for specially shaped sharpening stone (slipstone for gouge).

REFERENCES

Kingerey, W.O., ed. *Ceramic Fabrication Processes.* (Discusses dry pressing.)
Norton, F.H. *Elements of Ceramics.* Ch. 11, "Forming Methods."
Tinklepaugh, J., and Crandall, W. *Cermets.*

Film

Ceramics and Electronics. Tektronix, P.O. Box 500, Beaverton, Ore. 97005.

Charts and Literature

Ram Mold Co., 25 Snyder St., Springfield, Ohio 45504.
F. J. Stokes, 325 Chestnut St., Union, N.J. 07083.

SHARPENING STONE — Project Plan

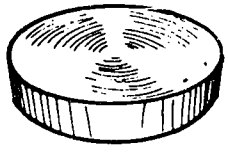

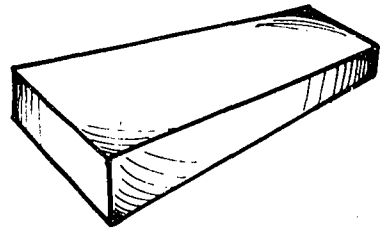

MATERIALS

80-grit silicon carbide
Jordan flour clay
Frit 3304
Honey

TOOLS AND EQUIPMENT

Press
Hydrocal
Plaster or metal mold

PROCEDURES

1. Dry mix, by weight:
   80% silicon carbide
   10% flour clay
   10% frit
2. Add 3% to 4% honey as a temporary binder to this mix.
3. Set the ram mold on the bed of the press.
4. Strike off the excess clay.
5. Make the pressing by closing the jaws of the arbor press.
6. Remove the pressing by means of air pressure at the base of a hydrocal mold or an ejector piston in a metal mold.
7. Fire at 2000°F.

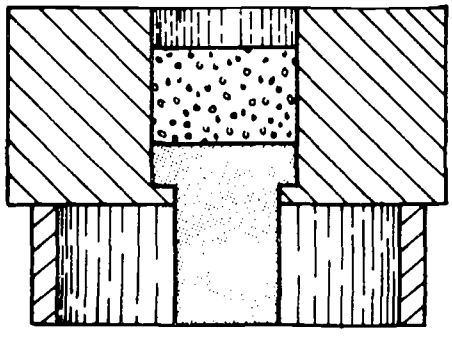

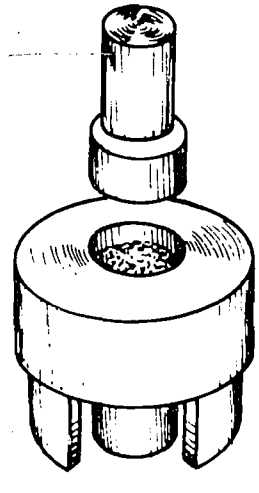

ALTERNATE MOLD FOR SHARPENING STONE

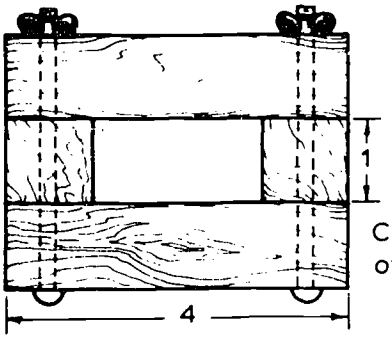

Constructed of 1" square maple.

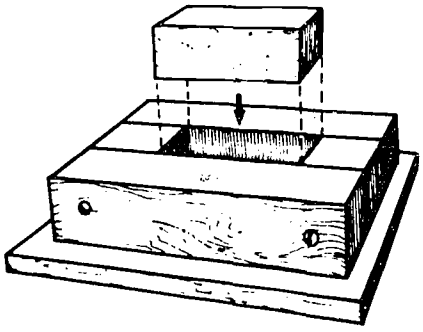

ALTERNATE MATERIALS (CLAY BODY)

Albany slip	3 parts
Granulated borax	1 part
Abrasive	16 parts
Wax resist (5% solution)	1 part
CMC (polyvinyl alcohol or cornstarch)	½% of total weight

PROCEDURES

1. Fill cavity.
2. Strike off excess clay.
3. Insert block.
4. Press.
5. Invert and push out pressing with block.
6. Fire at 2000°F.

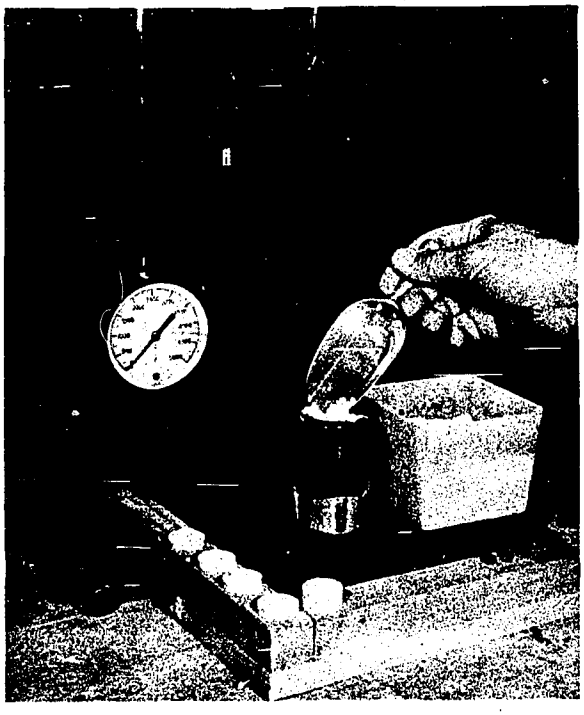

Filling checker mold

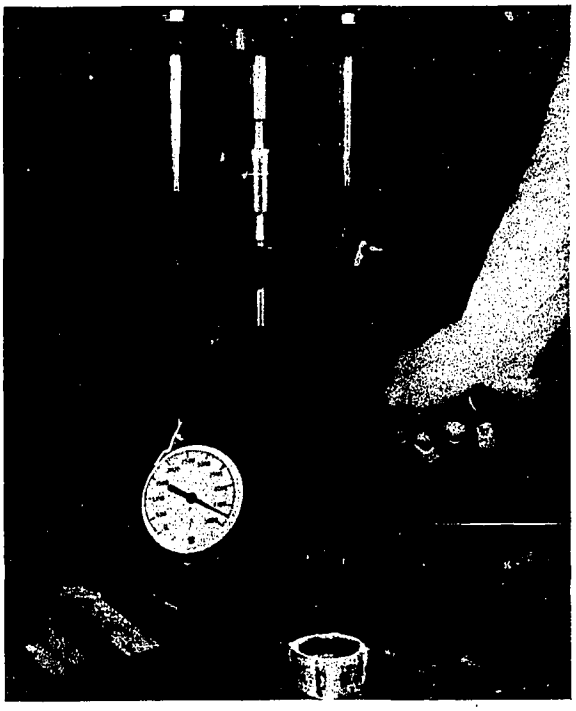

Dry pressing checker mold

CERAMIC MAGNET — Project Plan

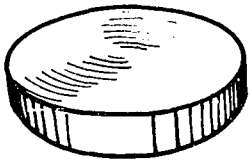

MATERIALS

Iron oxide	CMC	Carbowax
Barium carbonate	Ceramul "C"	

TOOLS AND EQUIPMENT

100-mesh sieve	Crucible	Ball mill
80-mesh sieve	Magnetizing coil	Muller
20-mesh sieve	Mortar and pestle	Ram press

This dry pressing project will give the student the opportunity to prepare the ingredients, press, fire, and magnetize the compacted units.

The die for the magnets may be made with a single cavity for one magnet, or multiple cavities for the simultaneous pressing of several of these units.

PROCEDURES

1. Combine 85% iron oxide (Fe_2O_3) and 15% barium carbonate ($BaCO_3$) by weight.
2. Add approximately 80% water; and ball mill for 2 hours.
3. Permit batch to dry by means of evaporation.
4. Sieve dried material (use 100-mesh sieve).
5. Fire batch in crucible to cone O3.
6. Pulverize the fired batch in a muller or mortar and pestle.
7. Add 1.25% CMC and mull 5 minutes.
8. Add 20% water (weight of dry batch) containing 1% ceramul "C" and .5% carbowax. Mull 5 minutes.
9. Batch should be pulverized so that it can pass through 20-mesh sieves and remain on 80-mesh sieves.
10. Allow batch to air dry.
11. Place this material into cavity of die. Strike off excess.
12. Apply approximately 10,000 psi pressure on ram press.
13. Fire pressed compacts at 2200°F. (approximately 300° per hour to 2000°F.) Then bring to 2200°F. in approximately 80 minutes. Hold 30 minutes and allow for normal cooling.
14. Polarize fired compacts in a magnetic field of approximately 10,000 oersteds.

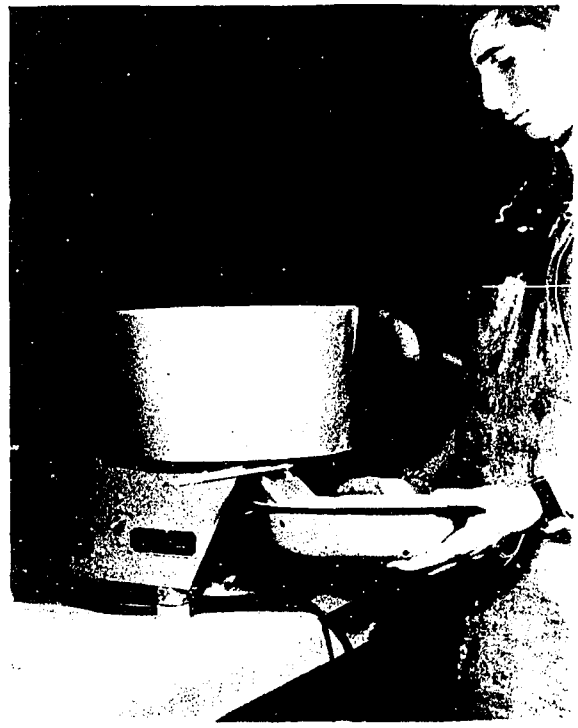

Unloading batch after mulling

REFERENCE

Suggested Process for the Manufacture of Barium Ferrite. Bulletin M752. Mapico Iron Oxide Operations, Cities Service Co., 60 Wall St., New York, N.Y. 10005.

CERMETS — Related Information Sheet

To meet the special requirements of aerospace research relating to jets, missiles, and electronic equipment, new materials have been developed which incorporate the most desirable characteristics of both ceramics and metals. These space age materials, designated as cermets, are durable, heat-resistant alloys formed by compacting and sintering a metal and a ceramic substance. Thus cermets are a combination of ceramic and metallic substances bonded together by chemical union, physical union, or both methods. The resultant product of this combination is a ductile, high-strength refractory material with good thermal shock resistance.

Cermets have been found to be of great use in missiles and rockets. They are used in missile nose covers, covers for radar equipment (Radomes), for coatings on metal, thermal barriers in rockets, and rocket nozzle inserts used with solid propellent motors. Electronic equipment that functions on jets, rockets, and missiles utilizes cermets to provide thermocouple protection for tubes and thermionic cathodes. Cermets are used in nuclear fuel elements, control safety rods, valve seats, and reactor components. Additional applications can be found in the machine tool industry where cermets, in the form of cemented carbide cutting tools, have been in use for many years.

Cermets are manufactured by normal ceramic forming operations such as casting, cold and hot pressing, extruding, and jiggering. After forming the raw shapes, the cermets must be placed in a sintering furnace.

Scientific research has attracted ceramists, crystalographers, and mineralogists who are investigating properties shown by the results of heating oxide materials at high temperatures and in the mechanisms by which cermets are formed. Experiments have been conducted with ceramic materials such as refractory oxides, carbides, aluminides, silicides, nitrides, and borides resulting in many useful products. Future research will expand the applications of cermets not only in aerospace, but also in other technological areas.

REFERENCES

Ceramics—Unlimited Horizons. Pamphlet. Aluminum Company of America, 1501 Alcoa Building, Pittsburgh, Pa. 15219.

How Good Are Ceramic Tools? Report No. 435, reprinted from the *American Machinist*, Dec. 3, 1956. Aluminum Company of America, 1501 Alcoa Building, Pittsburgh, Pa. 15219.

Isley, Herbert, and Frechette, Derck. *Microscopy of Ceramics and Cements.*

Lee, P. William. *Ceramics.*

Tinklepaugh, J.R., and Crandall, W.B., eds. *Cermets.*

Your Future in Ceramics. Reprinted from *Business in New York State*, Jan., 1963. College of Ceramics at Alfred University, Alfred, N.Y.

DIE ASSEMBLY FOR CERAMIC MAGNET

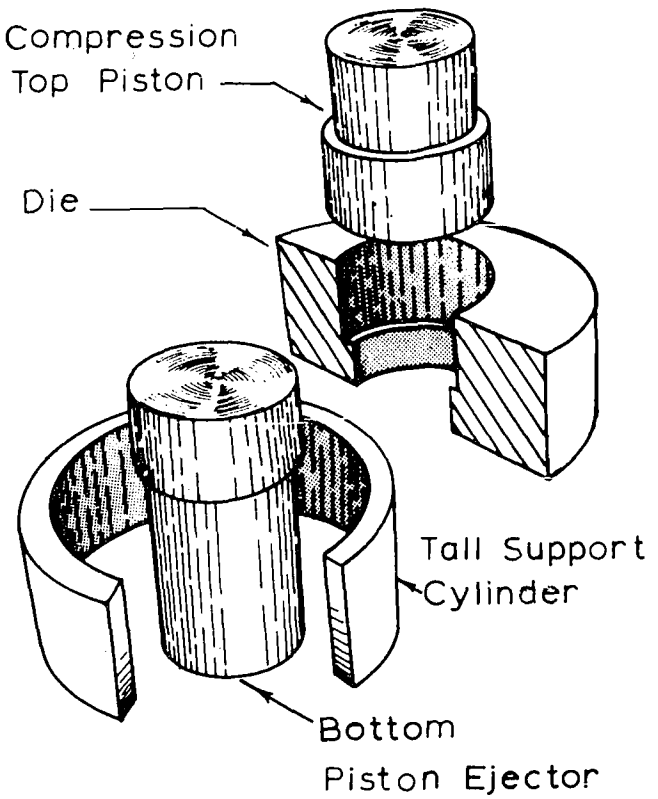

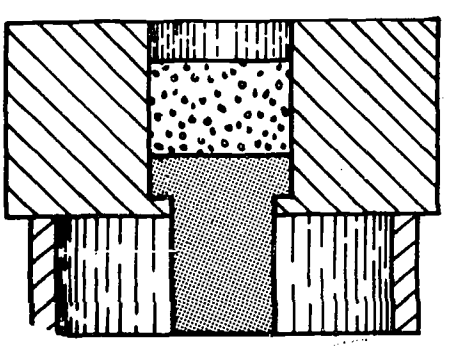

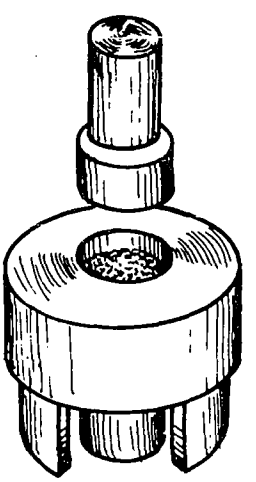

IMPULSE MAGNETIZER

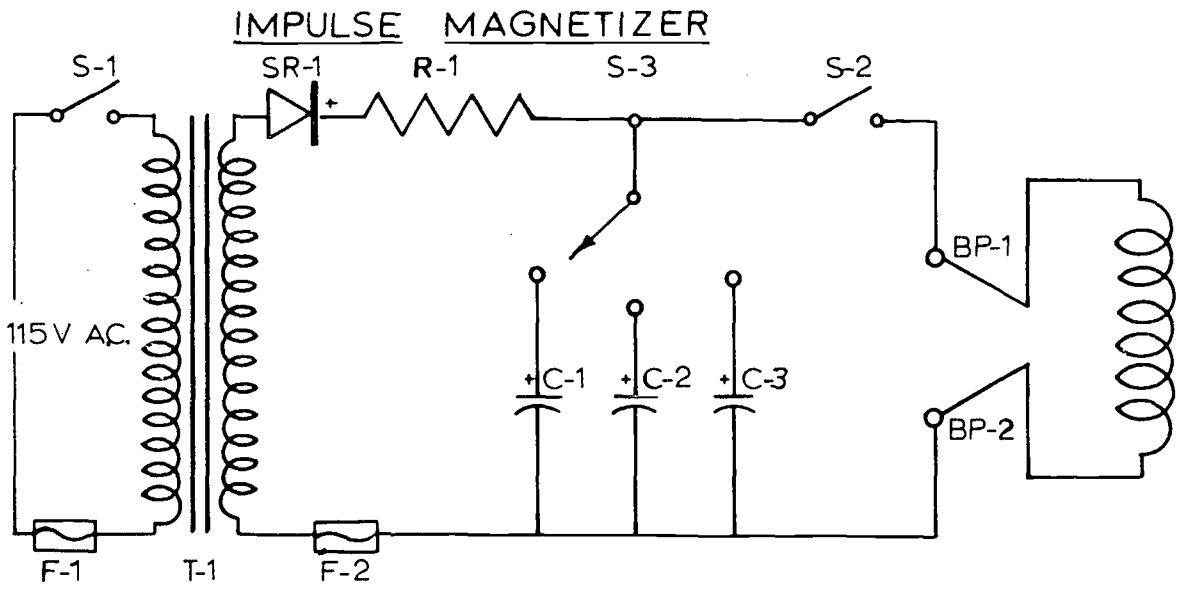

Diagram of a magnetizer to create the magnetic field needed for the production of ceramic magnets.

PARTS LIST

S-1	SPST on-off switch
S-2	SPST momentary contact switch
S-3	single pole, three-position wafer switch
F-1	5 amp. fuse
F-2	1/4 amp. fuse
T-1	power transformer, 125v. to 200v. secondary
SR-1	200 ma, 500PIV. selenium or silicon rectifier
C-1	100 MFD @300v. electrolytic capacitor
C-2	300 MFD @300v. electrolytic capacitor
C-3	500 MFD @300v. electrolytic capacitor
BP-1 and BP-2	standard binding post
L-1	10 to 50 turns of No. 14 enameled wire

WET RAM PRESSING

DEMONSTRATIONS AND OPERATIONS

Designing a mold or die
- One piece
- Two piece

Making a model
Making the plaster mold or die
- Making the cottle
- Preparing and pouring the plaster

Setting up the ram press
- Aligning and securing the dies

Preparing plastic clay
Preshaping
- Extruding and/or rolling clay
- Cutting to desired size

Using the ram press
- Applying mold release
- Filling the mold
- Pressing
- Removing the excess
- Ejecting the pressing
- Handling the pressing

RELATED INFORMATION

Industrial applications of ram pressing
Jobs in industry

SUGGESTED PROJECTS

Kiln furniture
Jewelry
Buttons
Appendages
Dish
Coaster
Letters (nameplate) or numbers (address plate)
Drawer pulls

SAFETY

Safety in the use of the mechanical equipment
Safety in the use of the molds (plaster)
Safety in the use of the clay

ENRICHMENT

Design and make a 2-piece press mold (i.e., a switch plate).
Design a mold for air evacuation and ejection.

CHARTS AND LITERATURE

Ram Mold Co., 25 Snyder St., Springfield, Ohio 45504.
F. J. Stokes, 385 Chestnut St., Union, N.J. 07083.

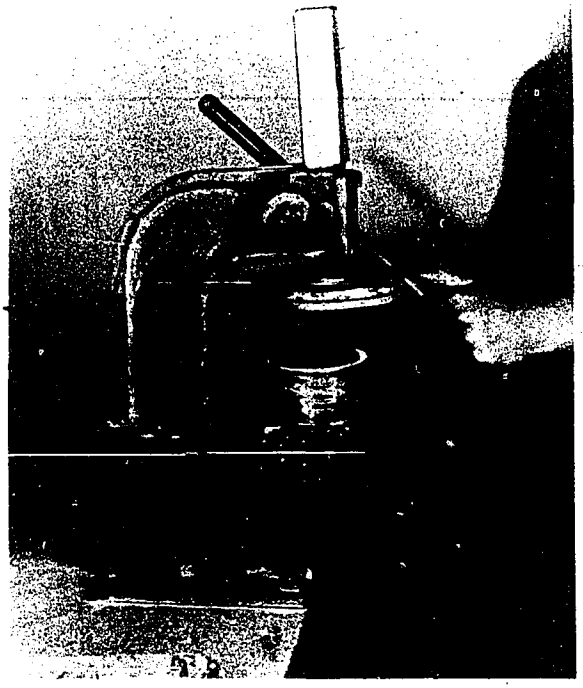

Loading mold for wet pressing

Trimming excess clay from mold

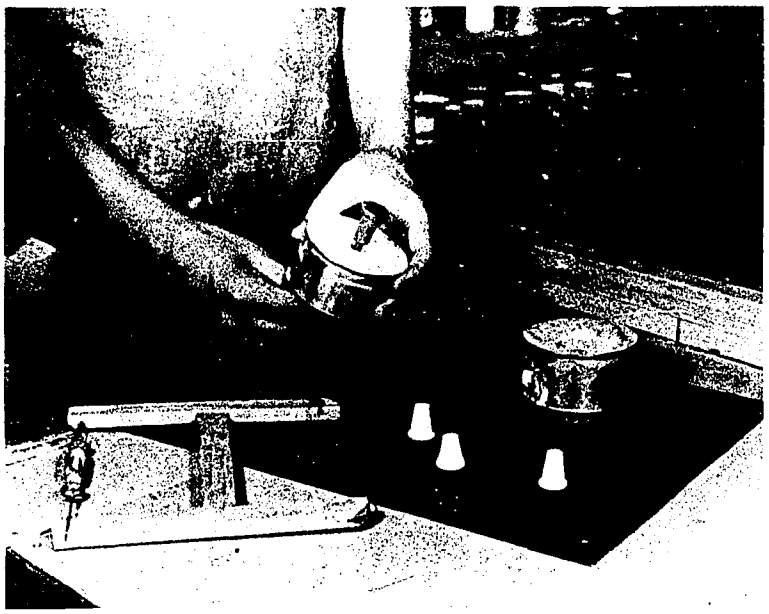

Ejecting pressing of drawer pull

SAMPLE DEMONSTRATION LESSON PLAN

Drawer Pull with a Ram Mold

Aim: To make a drawer pull, using a wet ram mold

Materials

Mold
Moist clay
Cheese cutter or stretched wire
Arbor press

Visual Aids

Examples of commercial pressings and those made by pupils, duplicate pressings of one object, examples of the drawer pull in various stages (pressed, fettled, fired, and glazed), prepared transparencies showing the action of the moist clay during the pressing, charts showing a cross-section of the mold with the empty cavity and the filled cavity, and the chalkboard

Motivation

Contrast student work done in a hand press mold and press work done commercially. Why are the drawer pulls so inexpensive? Determine that the drawer pulls are made by an industrial mass production process, which is being studied now.

Procedures

1. Take a piece of wedged clay, narrower than the interior of the mold but taller than the depth of the cavity. Place it in the cavity of the mold, pushing it down over the metal rod.
2. Set the ram mold on the bed of the arbor press.
3. Make the pressing by closing the jaws of the arbor press.
4. Strike off the extra clay with a cheese cutter or a stretched wire.
5. Remove the pressing from the mold by using a small piece of moistened clay.
6. Call upon several students to practice the operation. Emphasize the correct use of the arbor press.
7. At this point, fettling, drying, glazing, and firing are required.
8. To complete the drawer pull, a length of threaded stock (6-32) is inserted into the hole of the drawer pull and secured with epoxy cement.

Summary

1. How can we determine the amount of clay needed to make the pressing?
2. Which method is best, pressing the clay by hand or by using an arbor press? Why?
3. Why should we use a stretched wire rather than a palette knife to strike off the extra clay?

4. Why must draft be an important consideration to the mold-maker?
5. Is it possible to make a drawer pull that has another shape by use of the wet ram process?
6. How is the ram pressing removed from the mold in a similar operation in industry?
7. What is meant by recuring a die or mold?

Application

Have students prepare their own wet ram molds and make a production run of their original project.

Assignment

Have students prepare job sheets entitled "How to make a wet ram pressing" for their notebooks.
Make a sketch of the arbor press, and label all parts.
Make a drawing of a variety of objects which can be made by this technique.

Safety

Keep fingers and hands away from the mold while the jaws of the arbor press are closing.
Keep the arbor press clean and oiled.
Take care in the use of the wet ram mold.
Use the arbor press in the prescribed manner (i.e., regarding the amount of pressure to be used).

Charts and Literature

Ram Mold Co., 25 Snyder St., Springfield, Ohio 45504.
F.J. Stokes, 325 Chestnut St., Union, N.J. 07083.

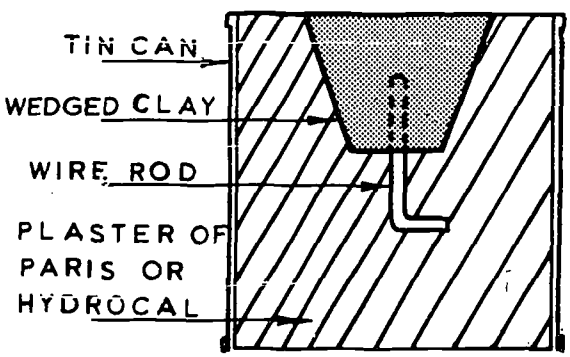

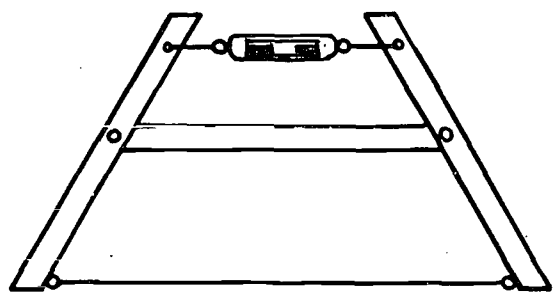

EXTRUDING

DEMONSTRATIONS AND OPERATIONS

Designing an extruding die
- Solid form
- Hollow form

Making an extruding die
- Plate dies
- Taper dies—cold casting plastic metal
  - Model
  - Mold
  - Casting
  - Finishing, machine or hand

Preparing clay body for extrusion
- Pugging
- De-airing

Extrusion forming
- Horizontal
- Vertical

Handling and cutting off extruded ware
Drying extruded ware
Fettling and finishing green extruded ware

RELATED TOPICS

Industrial applications of extruding
Industrial extruding dies
Shop and industrial safety procedures
Extrusion of nonplastic ceramic materials with addition of plasticizers and binders
Mechanical and hydraulic pressure systems
Industrial cutoff devices
Special kiln for firing special extruded shapes

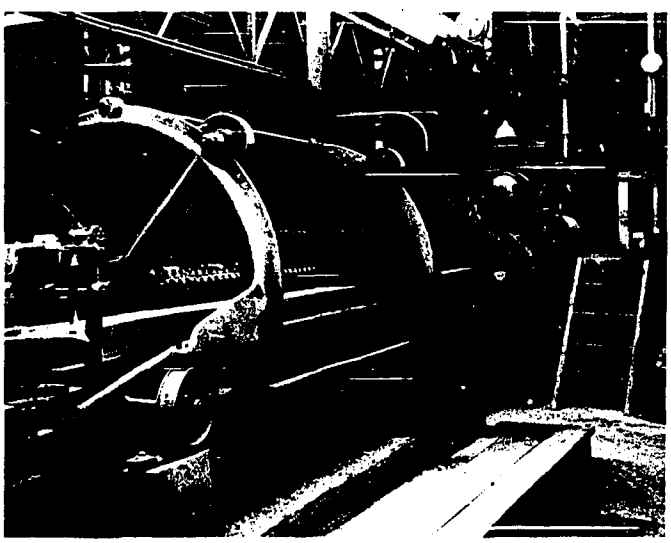

Gang cutter for extruded bricks

SUGGESTED PROJECTS

Miniature bricks
Ceramic beads
Ceramic bracelet links
Mosaic tiles
Kiln posts
Preshaped blanks for ram pressing

SAFETY

Safe loading and handling of extrusion press
Grounding electrical equipment
"Spitting-out" hazard

ENRICHMENT

Make a ceramic flute or whistle.

REFERENCES

Ceramics Project Ideas for Industrial Arts. Albany, N.Y.: State Education Dept., 1966.
Evolution of a Lump of Clay. Pamphlet. Coors Porcelain Co., Golden, Colo. 80401.

MOSAIC TILE HOT PLATE — Project Plan

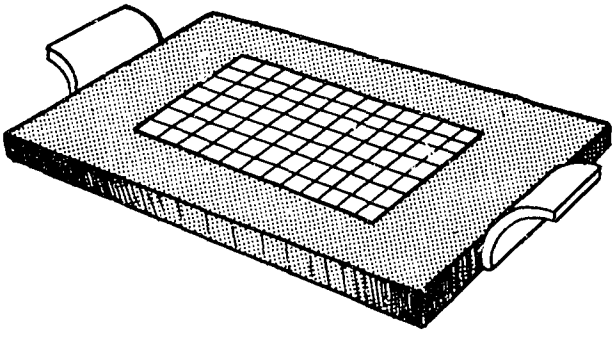

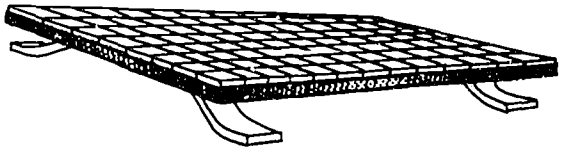

Mosaic tiles are readily made in volume by the extrusion process. This may be accomplished by utilizing an Amaco extruder or shop-built equipment. A strip or bar of clay is extruded through an appropriate die and is then scored when it is leather-hard to form the tiles. Glaze is applied to the green strip which is then dried and fired. Tiles are then cut from the fired strip as needed.

MATERIALS

Masonite or transite board
Adhesive (tile cement) grout
Wedged clay
Colored glazes
Frame or trivet

TOOLS AND EQUIPMENT

Extruder
Extrusion die of desired tile design
Spray equipment
Drying board
Kiln
Furniture
Mixing bowl
Try square
Scoring wheel
Ruler
Adhesive trowel
Tile nippers
Medium abrasive
Stone and grout trowel

PROCEDURES

1. Prepare clay body.
2. Prepare extruder.
   a. Load with clay.
   b. Install die.
3. Operate extruder.
   a. Apply extrusion pressure.
   b. Lead extruded strip away from die. Keep material straight.
   c. Cut off strips at desired lengths.
   d. Extrude enough strips for design requirements.
4. Arrange parallel strips on drying board. Let dry to early leather-hard condition.
5. Score impressions across strips, using try square and scoring wheel at intervals equal to width of strips.

Using extruder

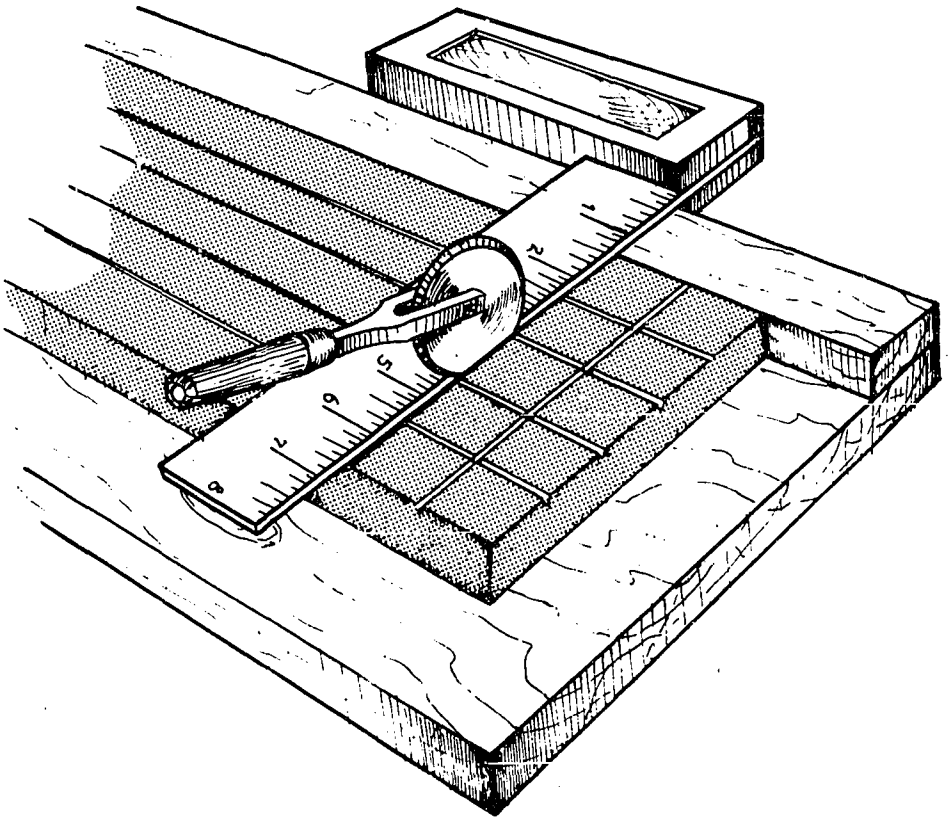

6. Allow strips to dry to green state, turning strips over occasionally to prevent warping or distortion.
7. Spray glaze onto strips according to color requirements. (Use spray hood and mask.)
8. When dry, arrange strips on kiln shelves and fire to required heat.
9. Cut backing board to required size and shape.
10. Cut fired tiles from strip with nippers applied to the score mark.

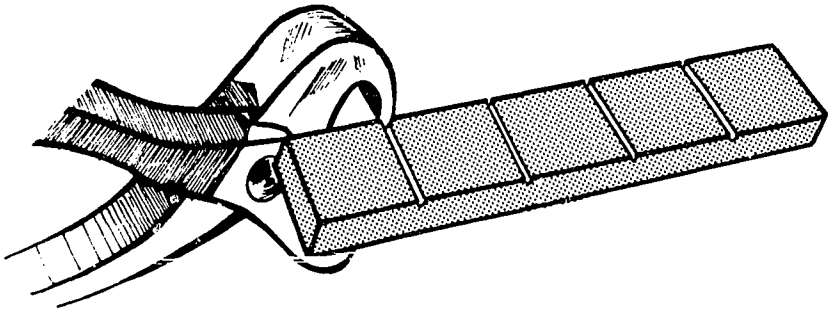

11. Rub cut edge on face of abrasive stone.
12. Arrange and adhere individual tiles to masonite backing board using tile adhesive. Leave space for grout line.
13. Mix and apply grout, filling all spaces completely.
14. When grout is partially set, buff entire surface with a rag to remove excess grout. Allow to set and dry thoroughly.
15. Set hot plate into appropriate tray, frame, or trivet.

EXTRUDING DIE MANUFACTURE

Flat-plate dies of metal function when the thickness of the die material is sufficient to withstand the pressure of the column of clay pressing against it. As plate thickness increases, die manufacturing becomes more difficult, making machine tooling necessary.

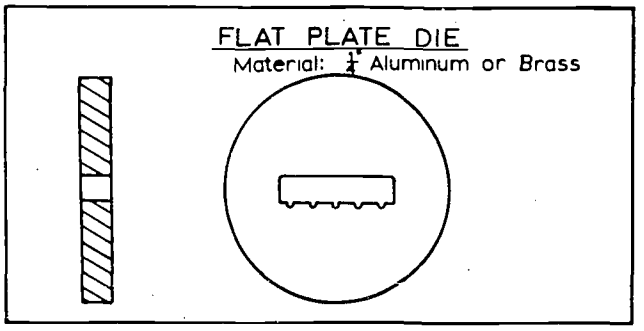

Taper dies of cold casting plastic metal (epoxy)

Die design tapers from tube diameter to die opening.
- Solid extrusions
- Hollow extrusions

Die model
- Wax
- Plaster

Use three-piece mold.
Seal mold surface (sizing).
Insert screening for die reinforcement.
Assemble mold.
Mix cold casting compound according to manufacturer's directions.
Fill mold and allow material to set.
Finish cast die
- Files
- Fine emery

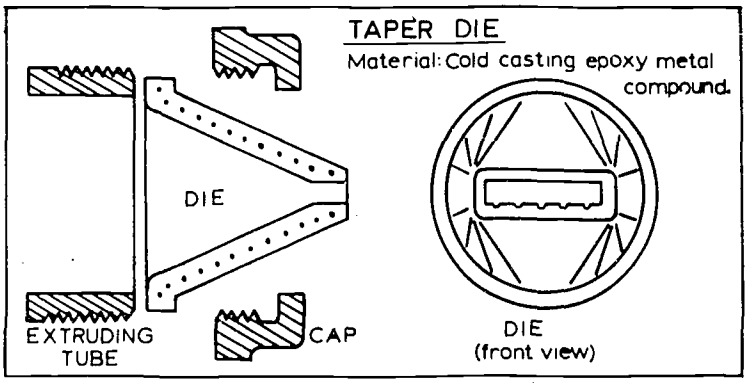

Taper dies for hollow extrusions require a segment held in place inside the die opening by an appropriately designed support or web.

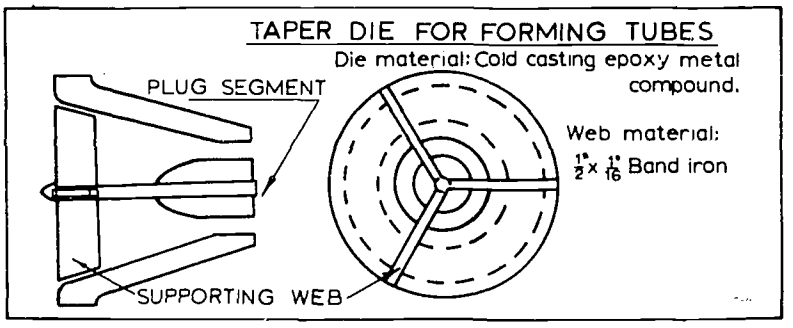

EXTRUDER - Tile and Brick

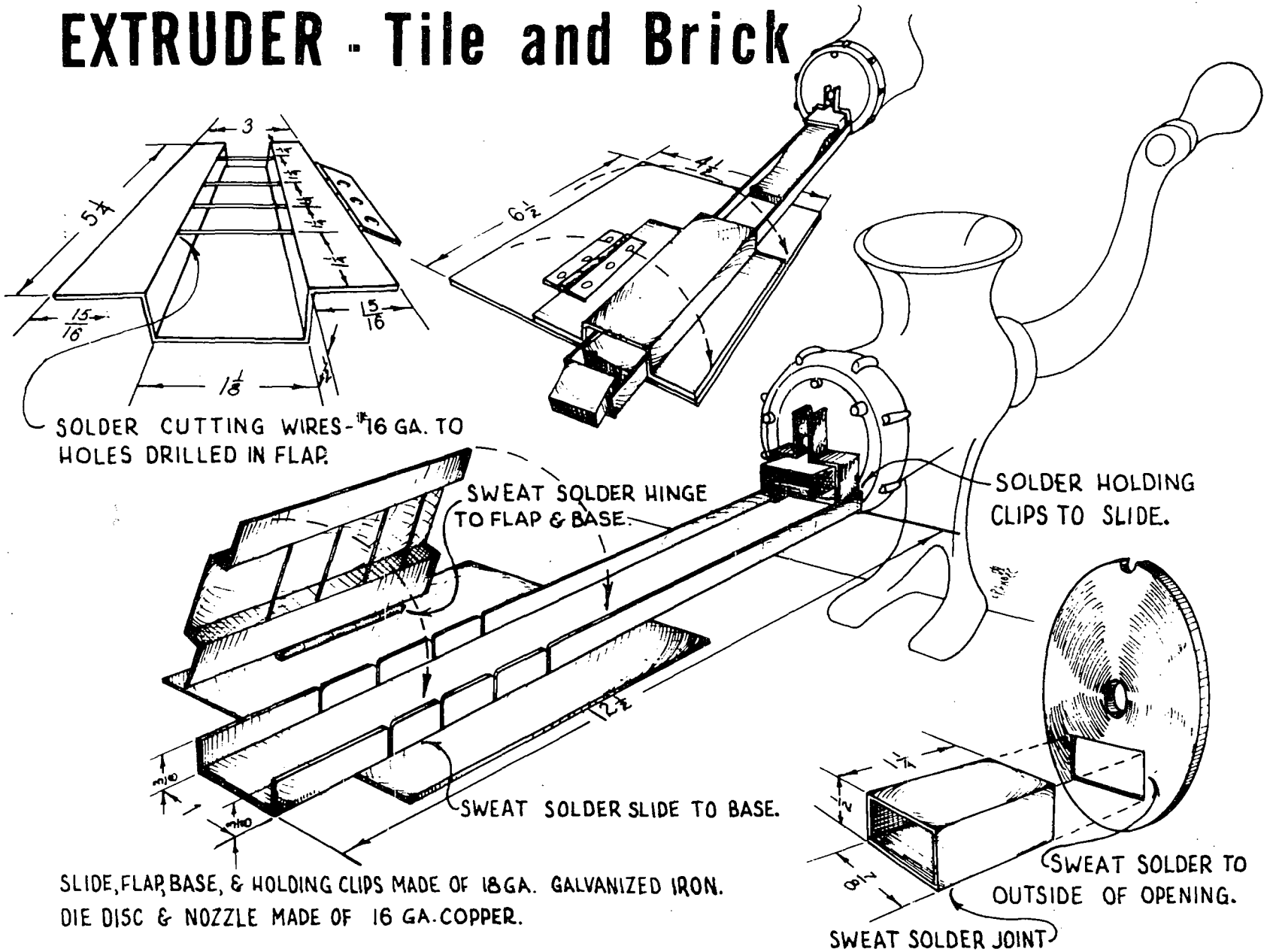

INDUSTRIAL DECORATION

Demonstrations and Operations

Making a photographic silk-screen stencil
Making a silk-screen frame
Making a decal from a silk screen
Preparing decorating media
  Underglaze materials
  Engobes
  Overglaze materials
Screening directly on ware; green, bisque, glazed
Imprinting by rubber stamp or blanket
Applying decals to ware
  Screenware
  Bisque
  Glazed
Making a stencil mask
Stenciling designs on ware
  Spray
  Stencil brush

Related Information

Manufacture of ceramic color media
  Underglazes
  Engobes
  China or overglaze colors
  Precious metals
Binders, vehicles, and adhesives
Types of screen materials (silk, synthetics, stainless steel)
Types of screen process film
Firing requirements for various media
Decal types
Manufacture of decals
Industrial machinery for screen process printing
Resist decoration
Care of silk-screen equipment

Suggested Projects

Silk-screen design on tile
Stencil mask for spraying jiggered flatware
Transfer decal for teapot
Slide-off decal for mug
Rubber stamp of name for application to project

Safety Procedures and Precautions

Identify and properly label all materials.
Establish procedures for safe handling of all material and equipment.
Familiarize all concerned about toxic or combustible nature of materials involved.
Establish required procedure for personal hygiene.

Enrichment

Make a silk screen for a two-color decoration.

References

Directions for Application of Intracels. Pamphlet. College of Ceramics at Alfred University, Alfred, N.Y.
Kosloff, Albert. *Ceramic Screen Printing.*
Shaw, Kenneth. *Ceramic Colors and Pattern Decoration.*

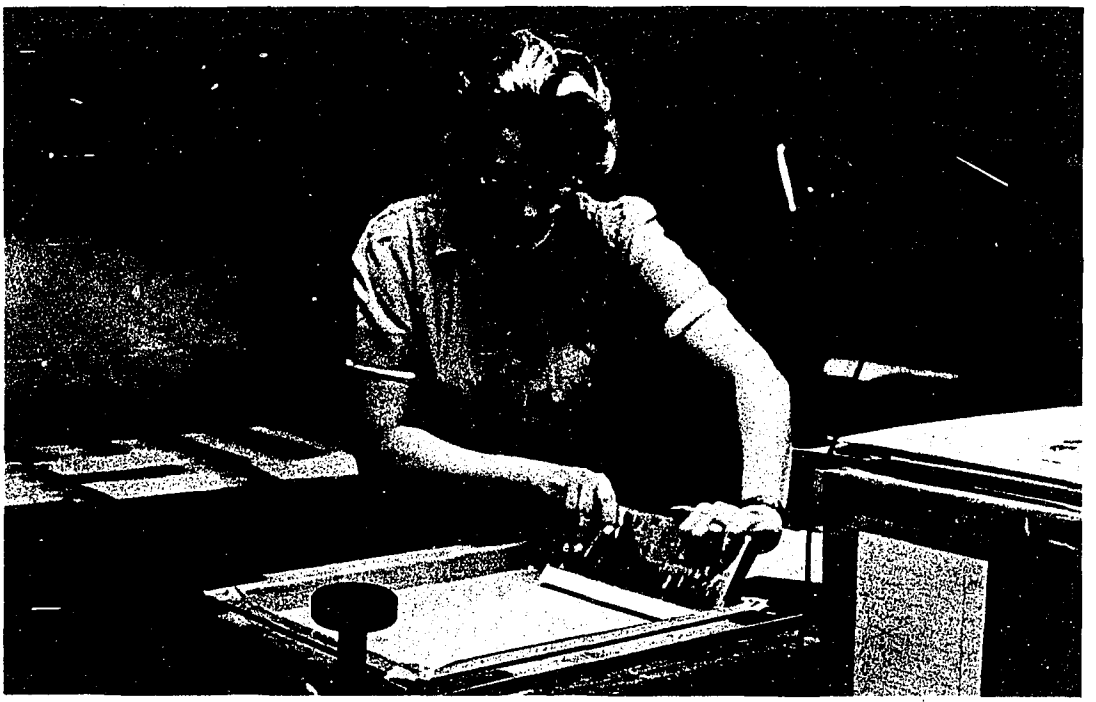

Screen printing decals by hand

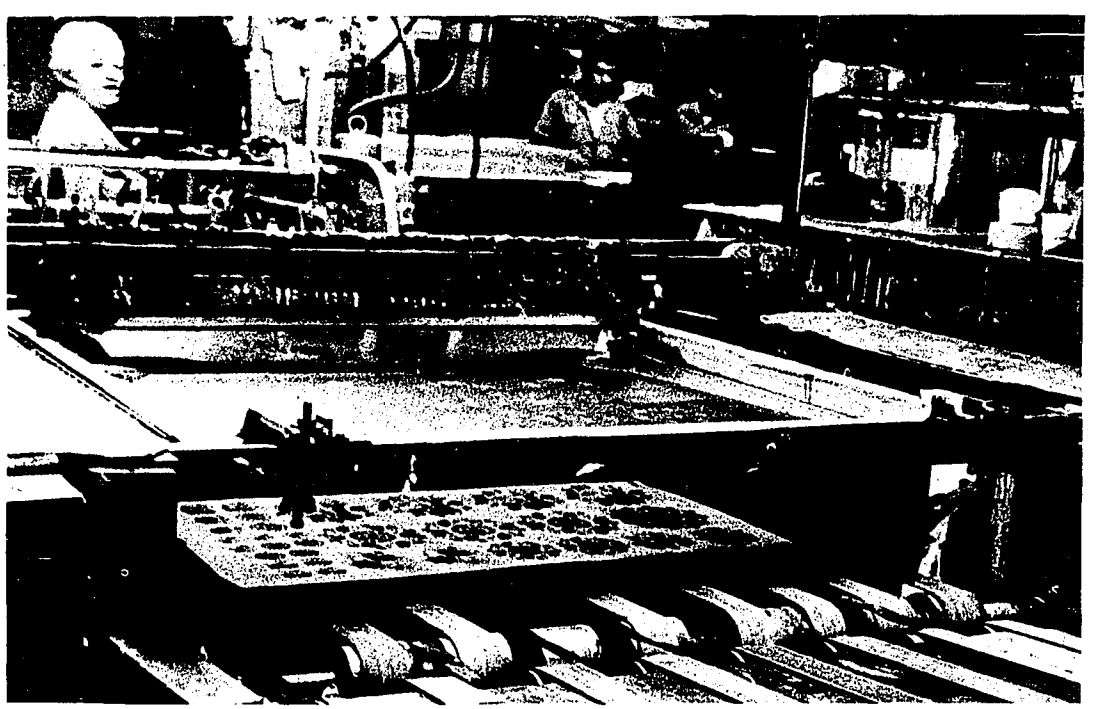

Screen printing decals by machine

PREPARING A SILK-SCREEN FRAME — Project Plan

There are several methods for embellishing ceramic and glass articles. One decorative technique which industry has adopted for mass produced ceramic and glass items is the silk-screen process based on the principle of the stencil.

MATERIALS

Clear white pine, 1½ sq. stock (Recommended frame size for school use should be 10″ × 12″ inside measurement.)
Silk cloth, No. 12xx mesh
Venetian blind cord, 44″ length
Gummed paper type, 1½″ width
Wood base, at least six inches wider and longer than the frame
Corrugated fasteners
Sandpaper
Pair of loose pin butt hinges
Staples

EQUIPMENT AND TOOLS

Miter box
Hammer
Staple gun
Setting tool (to ram cord into groove)
Circular saw
Sharp knife (safety blade)

PROCEDURES

A. Assembling the Wood Frame

1. On a circular saw, cut a groove along one edge of the entire length of stock. The groove should be centered and cut to a depth of ⅝″; it should be slightly narrower than the diameter of the venetian blind cord.

   Note: Wood frame parts may be purchased in a silk-screen supply store, precut to size, grooved, and mitered in even lengths according to the inside measurement.
2. Miter the 1½″ sq. wood stock to size, keeping the groove on the top face. A circular saw or miter box may be used for this operation.
3. The frame is assembled by nailing the corrugated fasteners across the miter joint at each of the four corners.
4. Sandpaper all edges and grooves to remove the sharp arrises.

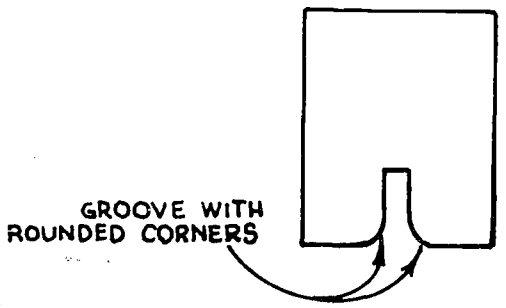

B. Attaching the Silk to the Wood Frame

1. Cut a piece of silk at least two inches larger than the frame on all sides.
2. Stretch the silk over the wood frame so that the silk evenly overlaps the frame on all four sides.

3. Using the setting tool and hammer, gently insert the venetian blind cord by pushing it, with the silk, into the groove. Start on one side and work it around the perimeter of the frame, pushing the cord into the groove while stretching the silk. Repeat this procedure until the silk is taut.

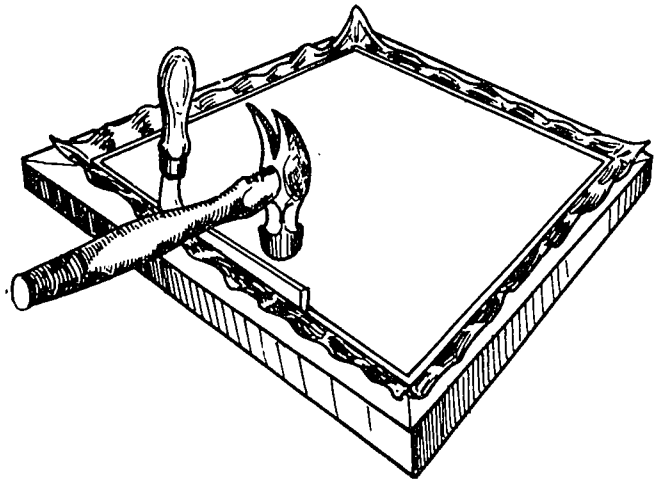

4. Trim the excess silk with a sharp blade so that the silk does not overlap the sides of the frame.
5. Tape the groove face of the screen by cutting strips of the gummed paper tape to the side of the frame for all four sides. Immerse the strips completely in water, and place the tape over the groove running the full length of the side and folding it over the edge as well. Rub gently with a clean rag. Tape all four sides in a similar manner to prevent moisture from wetting the cord in the groove.
   Note: If moisture gets into the groove, the silk may loosen in the frame. The screen must remain taut.
6. Cut strips of the gummed tape to fit the inside measurement of the frame, soak in water, and apply to the inside of the frame by folding the tape in half lengthwise and attaching the tape to the silk and wood frame.

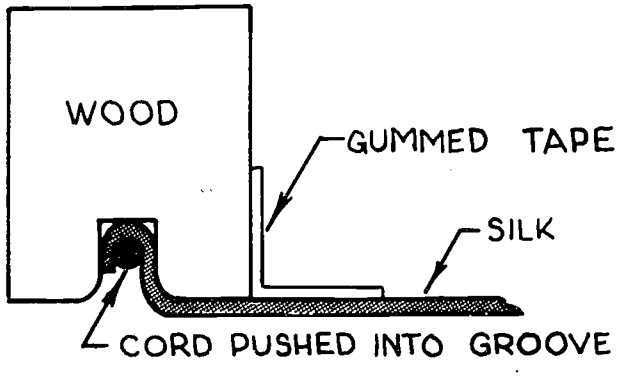

7. Cut four additional pieces of tape to fit the inside corners of the screen. Fold the tape and apply it in a similar manner to the four corners. This is necessary to prevent seepage of ink into the silk at the corners.

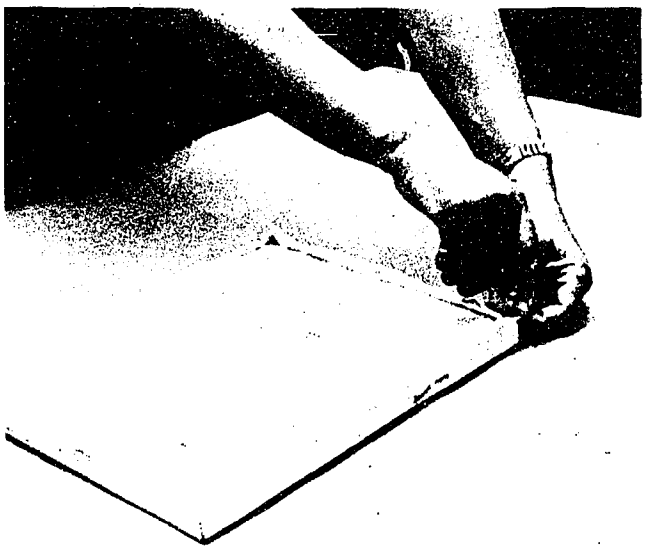

Trimming excess silk

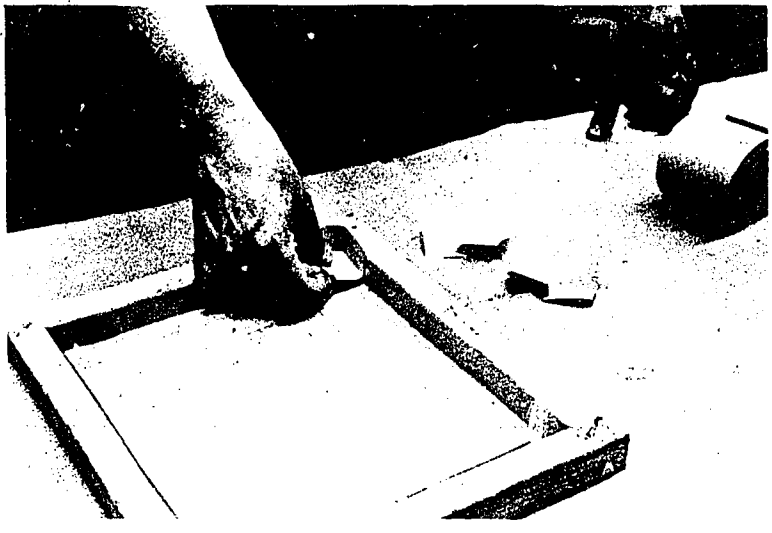

Applying folded paper tape to screen corner

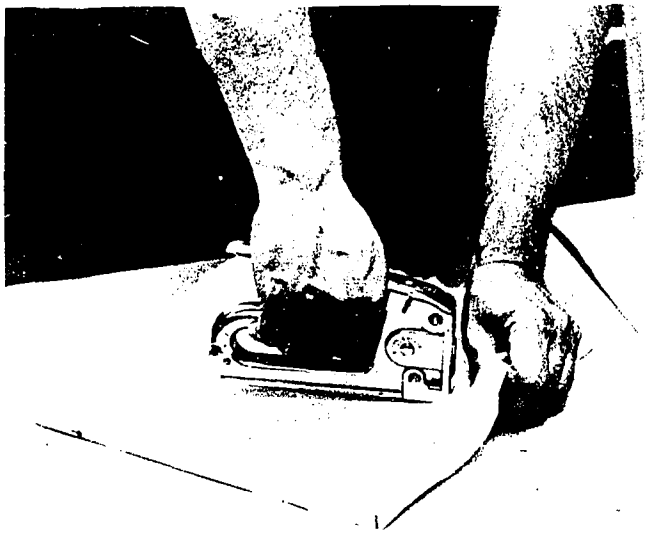

Stapling silk to frame

ALTERNATE METHOD FOR PREPARING A SILK-SCREEN FRAME

If a circular saw is not available, an alternate method is recommended. This alternate method will require the stapling of the silk to the wood stock.

PROCEDURES

A. Stapling the Silk to the Wood Stock

1. Miter the stock by cutting it to size in a miter box.
2. Assemble the frame by nailing the miter joints across the wood joint with corrugated fasteners.
3. Sandpaper all edges to remove the sharp arrises.
4. Soak the silk in water, and squeeze out the excess.
5. Lay the silk over the frame so that the silk overlaps evenly on the four sides.
6. Staple the silk to the top face of one section of the frame.
7. Work on the opposite section by pulling the silk taut and smooth. Drive staples into the center of this section securing the silk. Work from the center of this section to each corner, keeping the silk taut and smooth while stapling. From the center, work toward the other end; staple the silk to the top edge, keeping the silk smooth and taut.
8. On an adjacent section pull the silk smooth and taut, and in a similar manner continue stapling the silk.
9. On the last section, pull the silk smooth and taut, and complete stapling the silk.
10. Air dry the silk.
11. Complete the frame by taping as described in the previous method.

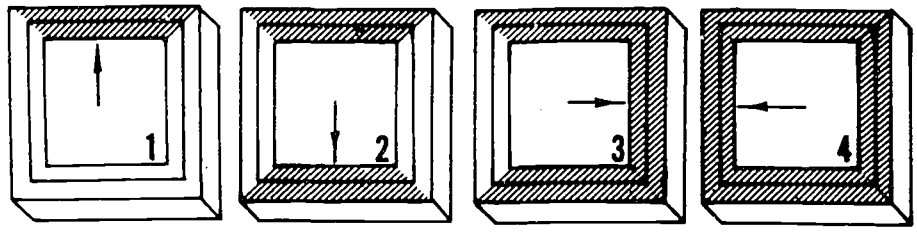

B. Attaching the Frame to the Bed

1. Locate the screen on the bed.
2. Place the pair of loose pin-butt hinges in position. Place cardboard spacers between the frame and the bed, raising the frame approximately ⅛". This additional required space provides "snap", a term used to express the action which takes place during the printing operation. The screen must snap away from the printed work after the squeegee is passed over the design portion of the screen. This helps to prevent blurring.
3. Attach the hinges securely in position.
   Note: Attach the loose pin-butt hinged to the bed so that the leaves of the hinges are reversed.

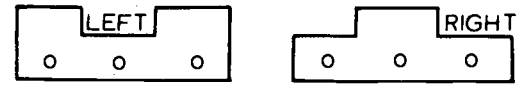

   When multicolor screens are needed, it is then necessary to use only one hinge for each additional screen. The leaves which are attached to the bed remain permanently in place while the new hinge is simply taken apart, and each leaf is attached to the frame in its position.
4. Remove the cardboard spacers from under the hinges, and place on opposite side on each corner. Attach to bed so that screen, when in printing position, will rest firmly on spacers. As an alternative, spacers may be attached to underside of frame opposite hinged section.

USING PRESENSITIZED FILM IN SILK-SCREENING — Project Plan

Ulano Hi-Fi Green is an all-purpose photo film, adaptable to direct and indirect (decal) printing in the ceramics shop. This film, which has a presensitized emulsion on a vinyl backing sheet, offers several special features:

It is always ready for use.
It does not require a darkroom for developing.
Only one developer is needed.
It has a long shelf life.
A vinyl backing sheet makes it easier to handle and insures perfect register.
The film works on an easy four-step principle: expose, develop, wash out, and adhere.

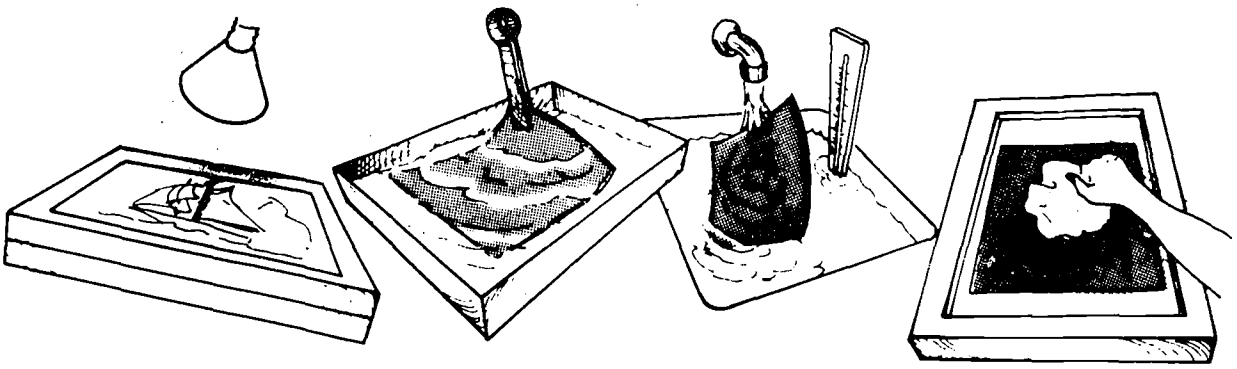

MATERIALS

Presensitized screen process film (Ulano Hi-Fi Green)
Developer
Controlled water supply
Benzine
Newsprint
Blockout liquid

TOOLS AND EQUIPMENT

Vertical vacuum frame
Arc lamp (35 amp.)
3 flat photographic trays, 12″ × 18″ × 3″
Newsprint paper
Tray thermometer
Electric fan

PROCEDURES

A. Exposing the presensitized silk-screen film:

1. Design and prepare a positive of the copy.
   Note: Positive can either be a drawing made on acetate (using jet black India ink or photographic opaque) or a photographic positive.
2. Cut a piece of presensitized film about 3″ larger than the positive.
3. Place the presensitized film on the bed of the vacuum frame, with the emulsion side down. Pick up the positive, with the image in reverse (refer to drawing, p. 41), and position it so that it is in contact with the vinyl surface. Use this method for placement of the positive in the vacuum frame for

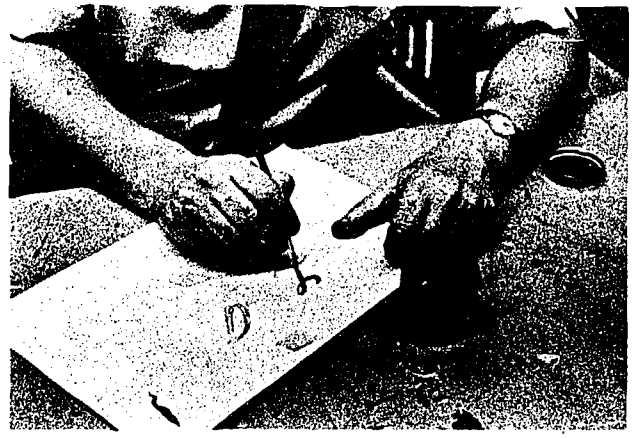

Preparing positive on acetate using photo opaque

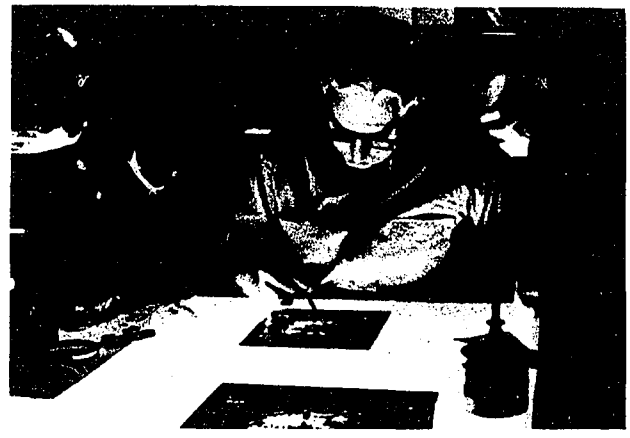

Retouching photographic positive on a light table

direct screen printing on the slide-off type decal. For decals which are to be applied in the face-down position, the positive should be in the obverse position during exposure of the film.

Caution: Avoid exposing presensitized film to direct sunlight or bright fluorescent illumination.

4. Close frame and turn on vacuum motor to achieve good contact.
5. Expose frame to carbon arc lamp.

   Note: A 35-amp arc at 30″ for 3 minutes is recommended.
   If an arc lamp and vacuum frame are not available, a simple exposing unit can be constructed that will utilize a 300-watt photoflood lamp and two sheets of glass. The presensitized film and the photographic positive are held in position by means of the two sheets of glass, and exposed for 2½ to 3 minutes.

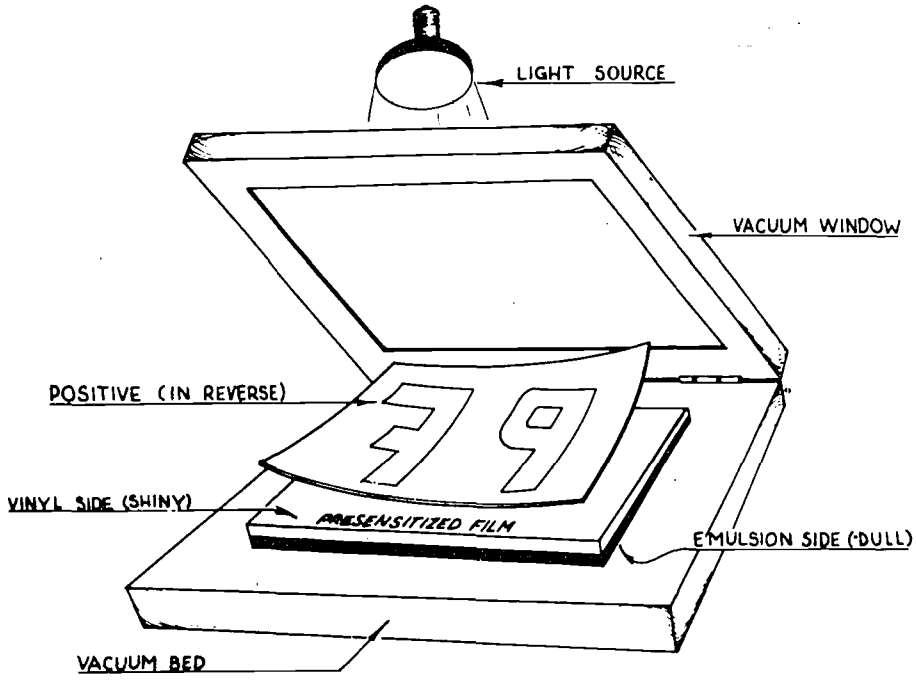

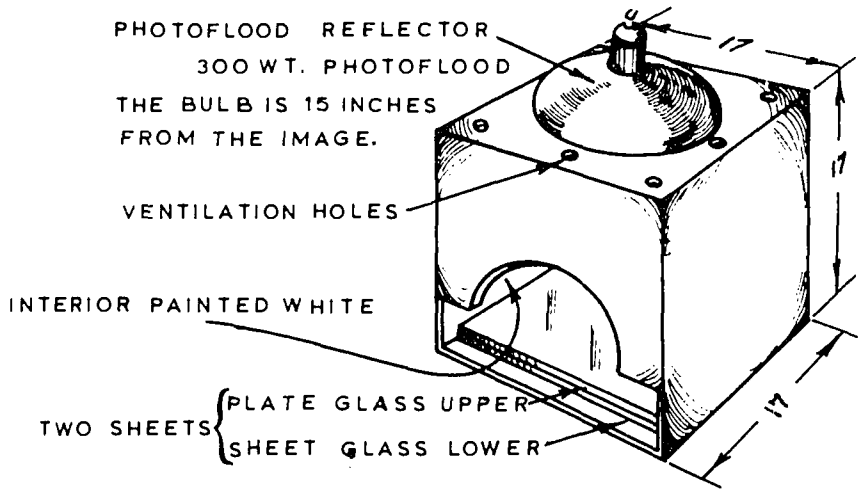

B. Developing the Presensitized Film

1. Add 28 grams of A to 35 grams of B in one pint of water at a maximum water temperature of 70°F.
2. Pour solution into flat photographic tray.
3. Immerse the film emulsion side up in developer.
4. Develop for 1½ to 3 minutes.

C. Washout

1. Check water temperature; maintain at 100°F. to 115°F.

   Note: Correct water temperature is extremely important.
2. Wash in cold water to fix gelatin in place.

D. Adhering the Film to a Screen

1. Place the wet film in register on the backing board of the silk-screen unit emulsion side up.
2. Lower the screen frame so that the silk comes in contact with the emulsion of the film.
3. Place paper towel or newsprint (not newspaper) over the silk and blot to remove the excess moisture. This pressure will cause the film to adhere to the silk.
4. Repeat the blotting until no additional water can be removed.
5. Unhinge frame and dry screen in front of electric fan.
6. Peel the vinyl backing sheet from the screen.

   Caution: If there is too much resistance, allow more time for drying.
7. Wash the adhesive residue from the underside of the screen with benzine.
8. Rehinge the screen to the backing board, and block out the open spaces in the silk that are not to be printed, using water-soluble glue.
9. Allow to dry.

E. Cleaning the Screen (Removal of Film from Screen)

1. Clean the screen with hot water, using a stiff brush, such as a toothbrush. If difficulty is experienced in removing the emulsion from the screen, use the enzyme recommended by the manufacturer. (If water-soluble glue has been applied to a screen area, it must first be removed under cold water before removal of the film is attempted.)

HOW TO SENSITIZE AND USE PHOTOGRAPHIC SILK-SCREEN FILM — Project Plan

Industry, in addition to using presensitized film, sensitizes its own film. Sensitizing film is a simple process, suitable for classroom use. The resulting film has several advantages.

A dark room is not necessary to develop it.
Greater flexibility in exposure time is possible.
It is very durable, yet it is readily removable from the silk.
It has a heavy, vinyl backing sheet which makes for ease in handling and may also be used for making film positives.

MATERIALS

Microfilm
Sensitizer—ammonium bichromate
Controlled supply of hot and cold water
Water-soluble, fill-in solution
Newspapers
Tempered masonite, 12″ × 18″, or stiff cardboard
Masking tape
Photo opaque
Clear spray lacquer
Dry transfer letters
Pencil
Vinyl backing material or clear acetate

TOOLS AND EQUIPMENT

Clean, soft, 3″ paint brush
Art brushes
Glass tray
Clean plastic container or brown gallon bottle to hold sensitizer
Sensitizer
Fan
2 glass plates
Sharp knife
Photoflood lights—set of two
Shower hose spray

PROCEDURES

A. Making Positive Film

1. Using original art work
   a. Make a finished drawing on paper.
      Tape a piece of frosted vinyl or clear acetate over the design. (Frosted vinyl backing may be taken from used microfilm.)
   b. Paint the design on the vinyl, using art brushes and the photo opaque.
   c. Dry pressing of letters, numbers, and special symbols can be done with dry transfers.
   d. When the design is completed, dry the sheet and spray the design with clear plastic lacquer to prevent smudging.
2. Copying a negative on positive film (using a simple printing box)
   Using any good grade of commercial litho film, place emulsion side of negative against emulsion side of blank film and expose in a contact frame for about 5 seconds under a 25-watt bulb. Develop accordingly. Fix in hypo and wash in water. Allow to dry.

B. Preparing the Sensitizer

Caution: Ammonium bichromate is poisonous if ingested. Mix ¼ lb. ammonium bichromate in a gallon of water (an ounce to a quart).

Mix the ammonium bichromate in a half-gallon of warm water; then add a half-gallon of cold water. The sensitizer cannot be used warm and should be cooled before using. (It can be mixed cold.) The solution can last for months since only a very small amount of sensitizer is needed for each screen.

C. Sensitizing the Microfilm

1. Cut a piece of film from the roll of microfilm. It should be 3″ longer and wider than the design on all sides.
2. Place on masonite, shiny (emulsion) side up; tape corners.
3. To prevent the sensitizer from running under the film, seal all edges of the film by completely taping these edges to the masonite.
4. Place newspapers on the table.
5. Pour a small amount of sensitizer into the glass tray.
6. With a soft brush, flood the film with sensitizer by brushing back and forth and crosswise to insure even coating of the sensitizer. Smooth out the sensitizer evenly so that no bubbles remain on the film and the excess sensitizer has been removed to prevent it from running across the film later on.
7. As the film dries, it becomes sensitive to light. It is essential at this point that the drying take place in subdued light, preferably a closet, booth, or carton. Use a fan to hasten drying.

Caution: Do not get sensitizer on positive film. It cannot be removed from the emulsion; and it will prevent light from passing through the positive.

D. Exposing the Microfilm

1. When the film is dry, cut it from the masonite and place it on a clean glass plate, sensitized surface down. Place the positive on the film face down. (Any printing will now be in reverse). Cover both items with a second piece of glass plate.
2. Hold the photoflood lights about 36″ above the glass plates, turn on the lights, and expose the film for 45 seconds. (One photoflood light may be used for small screens.)
3. With the shower hose spray attached to the faucets, wash out the exposed film in hot water which is approximately 150°F. (The water should be as hot as can be tolerated without burning the skin.)
4. Lights may be turned on at this time. Examine the film for sharpness and clarity of design. All black areas as shown on the positive should be completely clear on the washed film. Feel the film; it should be slimy, which indicates that it has been properly exposed. This slimy condition is essential for proper adhesion to the silk. Overexposed film does not become slimy during washout; underexposed film appears thin, washed out and shows pin holes.

E. Attaching the Film to the Screen

1. With the screen in the upright position place a piece of vinyl backing on the bed.
2. Place the wet film with the emulsion side up, on the vinyl backing.
3. Adjust the location of the film by moving the vinyl backing until the design is positioned properly.
4. Lower the screen onto the film, and place a sheet of newspaper inside the screen covering the design area. With a dry rag, rub the newspaper until the wet film is securely adhered to the silk. Repeat this operation several times, using clean newspapers each time.
5. Dry the screen by using the electric fan.
6. When the screen is completely dry, carefully peel the vinyl backing from the film.

F. Filling the Open Spaces

1. Remove the screen from the bed by removing the hinge pins.
2. A water-soluble, fill-in solution is poured inside the screen over the areas which should be blocked out. Avoid covering any of the printing areas with this solution. A straight edged piece of cardboard may be used to spread the fill-in solution. Two thin coats are better than one thick coat.
3. Dry the screen.
4. Replace the screen on the bed.

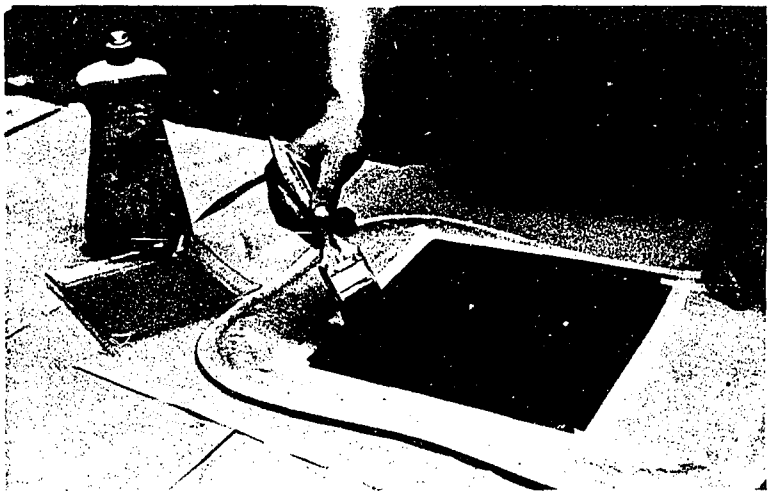

Applying sensitizer to film

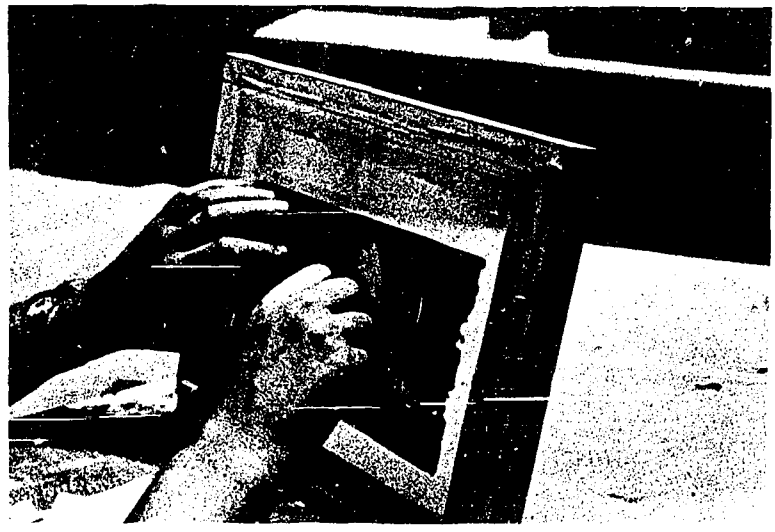

Removing vinyl backing from film

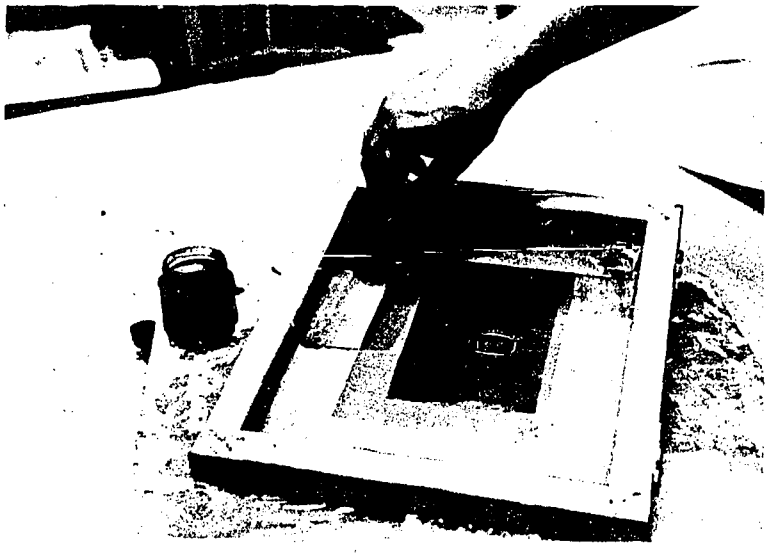

Applying fill-in solution

MAKING A DECAL FOR CERAMIC DECORATION — Project Plan

Decalcomanias or printed transfers are used in industry to decorate dishes, pottery, enamelware, glassware, and when direct printing is difficult because surfaces are curved, wrinkled, or fluted. By adapting the modern techniques of the graphic arts industry, students of ceramics can readily achieve professional results.

This recommended method utilizes a special type of decal paper, Ceramicol, which does not require the use of cover coat. Cover coat, applied over the color design, is usually used in decal production to provide protection and support for the color image. Cover coated ceramic decals have a short shelf life. Ceramicol paper is manufactured with a special medium which supports the color image and yet permits the storage of ceramic decals over long periods of time.

Materials

Ceramicol decal paper—18″ × 24″ sheets
Dry ceramic silk-screen colors
Decal medium (vehicle)—used for glass but works well on china
Varnolene or kerosene
Newspapers
Clean can with a tight cover for the ink
Cardboard
Masking tape

Tools and Equipment

Silk-screen frame with the film attached
Medium rubber squeegee—square cut, sharp edged
No. 100 mesh sieve
Paint stirrer—also for use in a drill press

Procedures

A. Preparing the Ceramic Ink

1. Place a large sheet of clean paper under the sieve.
2. Pour the powdered color into the sieve. With a straightedged cardboard scrape the dry color through the sieve. This process breaks up the lumps in the color caused by moisture and prevents the formation of bubbles in the printed matter. (A 12xx silk screen may be used as a sieve.)
3. Collect the sifted, powdered color in the clean can.
4. Add the medium to the can of color (approximately 1 part of vehicle to 4 parts of color). Blend thoroughly with the paint stirrer, which may be operated by hand or attached to a drill press. The mixture which results should have the consistency of honey.
5. It is suggested that color proofs be made before running the entire job. Using any screen with a design, run off a few prints of color on Ceramicol paper. After drying, transfer to china or glass and fire accordingly. If more than one color is printed and overlaps, the colors must fire at the same temperature without the second color leaving a burnt ash residue.

   Note: Printing difficulties may be caused by:

   Too much pigment which will not permit the ink to pass through the screen;
   Too much vehicle (medium) which will result in lighter shades of color, absence of color, bubbles, or specks of white;
   Cold weather or drafts which may stiffen the inks.

Sifting dry color through screen

Blending color and medium in a container

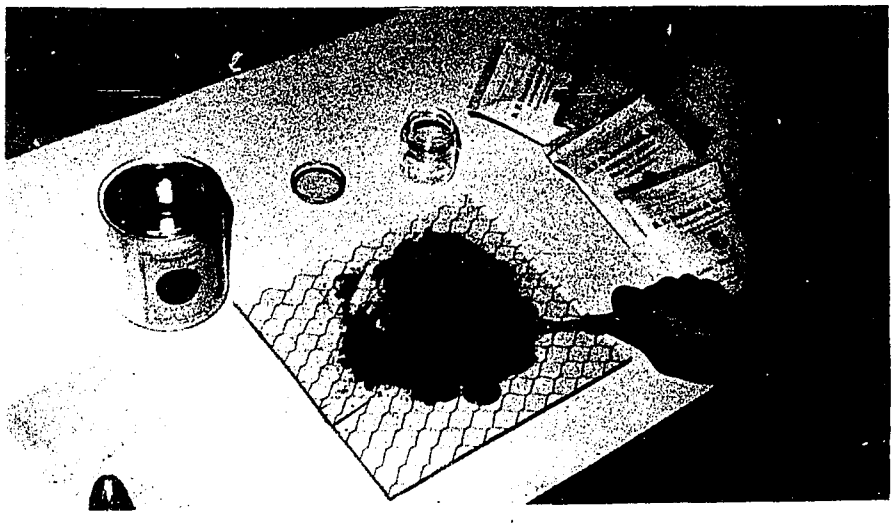

Blending dry colors and medium on a glass plate

B. Preparing the Paper

1. Cut the Ceramicol paper into pieces convenient for handling.
2. Tape a piece of the paper in position for printing.
3. Tape register guides to the bed in order to register the printing properly.

C. Preparing the Squeegee

1. Select a squeegee which is the right size for the job. It must be larger than the design.
2. Check condition of squeegee edge; it must be square and sharp. Sharpen by sanding, if necessary.

D. Making the Decal

1. Pour ink into the frame.
2. Place a piece of Ceramicol paper in the register guides.
3. Pass over the design once only with the squeegee. Check for "snap" * and tightness of the hinges.
4. If more "snap" is needed, add cardboard spacers between the screen and the bed.
5. Printing should be continuous, and the screens cleaned immediately after a run is completed.

E. Cleaning the Screen

1. Place newspapers on the bed under the screen.
2. Remove as much of the ink as possible with a straightedged cardboard. Replace the ink in the can and keep the can covered.
3. Pour some varnolene into the frame to soften the ink.
4. With a clean rag, rub the screen carefully, cleaning the ink on the inside.
5. Do not rub too hard on the back of the screen.
6. Examine the screen to make sure that it is clean.
7. Leave the screen standing upright to dry in the air.

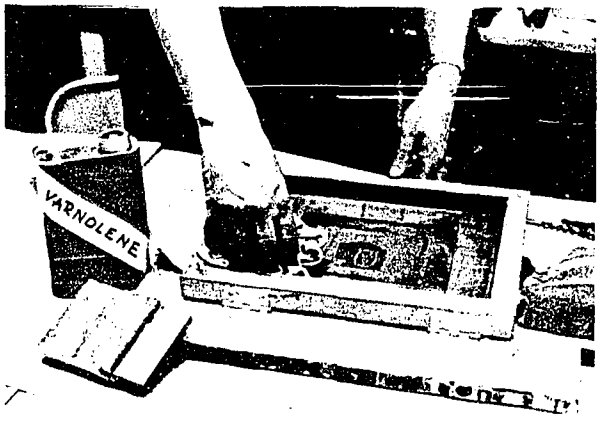

Cleaning screen

F. Removing the Stencil from the Screen

1. With the screen attached to the bed, place a few layers of newspaper under the screen. Pour cold water onto the screen, and rub vigorously with a clean cloth. Change and repeat until the fill-in area is clear. This operation must be done first since hot water permanently sets the fill-in material.
2. Remove screen from bed and soak in hot water until film is entirely removed from silk. If difficulty is encountered, use an enzyme film remover.
3. Allow the screen to air dry.

---

* The term "snap" indicates the capacity of a taut screen to pull away immediately from the paper, following the passage of the squeegee.

SAMPLE RELATED LESSON PLAN

Identification of Ceramic Decals

Aim: To identify ceramic decals (decalcomanias)

Materials

Sample underglaze
Student-made decal sheets
Simplex and duplex papers
Ceramic printing inks
Tissue paper
Jar of cover coat (lacquer or varnish)

Motivation

Contrast the direct printing method with the indirect printing method used on ceramic surfaces by showing pottery, tiles, and glassware exhibits to the class.

Show how decals are employed on surfaces which cannot be printed on directly, for example, grooved or fluted shapes. Decoration is the principal reason for the use of decals in the mass production of art ware, dinnerware, etc. (Display sample objects.)

Procedures

1. Note and discuss ceramic inks. Ceramic colors are laboriously milled and combined with a medium to make the ceramic ink. The recipe calls for an underglaze printing ink which can be used only on ceramic ware. For permanency these inks must be fired in a kiln or lehr, as are other glazes.
2. Note and discuss decal papers which are specially prepared papers for decal decoration.
   a. Simplex decalcomania paper is a single sheet of heavy, porous paper which has been coated on one side with a water-soluble coating. This coating of decal gum or gelatin serves as a base on which the decal is printed. Simplex paper is generally used for the slide-off type of decal.
   b. Duplex decalcomania paper is specially prepared or the ceramic printing trade. It consists of the heavy backing paper to which a thin sheet of tissue paper is semi-permanently attached. The tissue paper is coated with a water-soluble decal film. Duplex papers are mainly used for the face-down type of decals. The pottery industry has used this type of decal on its finest sets of dinnerware.
3. Classification of types of decals is usually by the method of application. There are a variety of methods of adhering decals to ceramic surfaces which have been developed to meet the special needs of local industry.
   a. Slide-off and water-mount decals are printed on the dry decal film on simplex paper. A varnish coating (called cover coating) is printed separately over the color film. This is used primarily for overglaze decoration on pottery, glass, metal, enamels.

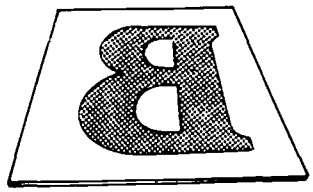

Varnish mount decal
(FACE-DOWN)

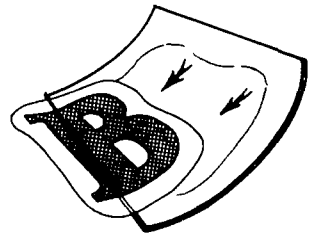

Slide-off decal
(FACE-UP)

b. Face-down or varnish-mount decals are usually printed in reverse on duplex paper. There is no adhesive applied to the top of these decals.
c. Solvent-mount decals (other face-down decals) are printed on duplex paper like the varnish-mount decals and are applied face-down. The solvent-mount decal is an underglaze decoration which is soaked for a short time to soften it and make it stick to the surface of the ware.
d. In some types, underglaze colors are printed over a gelatin coated side of tissue paper. These decals are applied to the pottery ink-side down while the print is still tacky. This type has limited application for underglazing.

Summary

Which of the various types of decal is the simplest to apply? Explain.
Why is it necessary to use a face-down decal?
Why have so many types of decals been developed?
When two or more colors are printed, why is it necessary to use ceramic inks which have the same maturing temperature on the decal?

Application

Students whose project is the making of a decal must select decal paper and ceramic inks, and determine the method of applying the decal to their ceramic ware.

Assignment

Obtain samples of as many types of decals as possible; identifv each sample and explain how it was manufactured.
Prepare a one-page layout showing the steps necessary in the making of a slide-off decal or a face-down decal. (Use line drawings and add the explanation below each diagram.)

References

Kosloff, Albert. Ceramic Screen Printing.
Shaw, Kenneth. Ceramic Colors and Pottery Decoration.

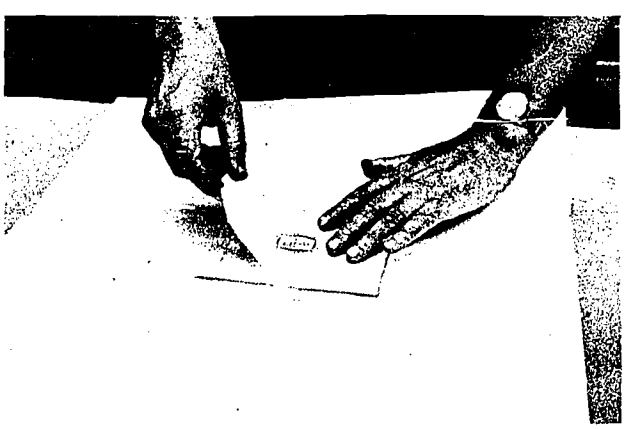

Applying slide-off decal

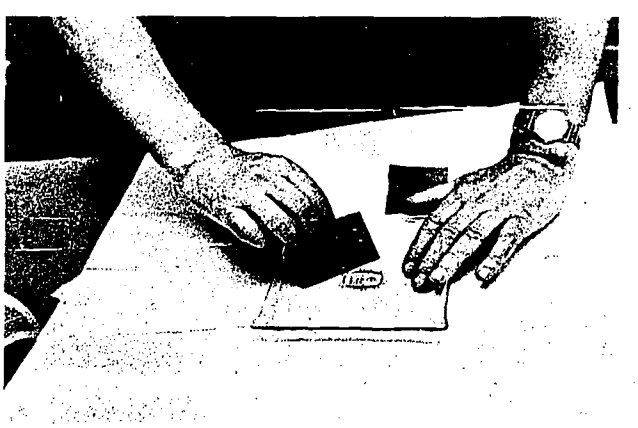

Using card to squeegee decal to dish

HOW TO USE CERAMIC DECALS — Related Information Sheet

MATERIALS

Slide-off decals
Varnish-mount decals
Solvent-mount decals
Wet-ink decals
Pan of water
Pail of water
Thermometer
Dry cloth or sponge
Decal varnish
Turpentine
Stiff brush
Solvent (Intrasolve) for solvent-mount decals
Glycerine

PROCEDURES

Note: It is important to establish standards of good workmanship since neatness, cleanliness, orderliness, and precise methodology result in successful decal application.

A. The Slide-off or the Water-mount Decal

1. Clean the ceramic surface to be decorated, and keep it at room temperature.
2. Soak the decals in a pan of clean water not less than 70°F. for about 15 to 30 seconds or until the design loosens from the backing paper.
3. Pick up or slide the decal from the backing paper, and place it face up on the ware. The decal can be moved at this time to make position adjustments.
4. Squeegee (smooth) the decal from the center outward, to remove all water and air bubbles present between the decal and the surface of the ware. Squeegeeing establishes a perfect and enduring contact of decal and mounting surface. (A business card may be used for this purpose.) After squeegeeing, all gum residue and any remaining surface water must be removed from the decorated area with a dry cloth or a clean sponge. The decal decoration may then be dried.

B. The Face-down or Varnish-mount Decal

1. Clean and dry the ceramic surface which is to receive the decal.
2. Separate the tissue layer from the backing sheet for a distance of ½″ at any corner, to facilitate removal of backing paper after transfer.
3. Apply decal varnish to the face of the decal by means of a brush. The varnish may be thinned with 30 to 50% pure turpentine to help speed up the rate of drying.
4. A simple test to determine the proper degree of tackiness required for transfer: Place the back of a fingernail against the varnished surface of the decal. If the decal sticks to the fingernail, it is too wet and should be allowed additional drying time. Retest until the decal does not stick to the fingernail and yet retains a slight tackiness.
5. The decal must be applied at this critical point. Locate the design carefully, and apply the design face down on the ware. The decal is smoothed out with a moist, stiff brush or sponge until the decal adheres perfectly to the ware. Care should be taken to avoid wrinkles in the decal.
6. Starting at the loosened corner, strip off the backing paper, leaving only the tissue with design adhered to the ware.
7. Saturate a small piece of cloth in water; daub against the tissue lightly until the tissue disintegrates and falls free of the decal.
8. Dry ware for 8 to 12 hours before firing.

C. Solvent-mount Decal for Underglaze Application

1. The entire tissue surface, which supports the printed decal design, is separated and removed from the backing paper.
2. The tissue-supported decal is placed in a special solvent and soaked for a short time to soften it in preparation for adhesion to the surface of the unglazed ware.
3. The decal is placed face down in the desired location and squeegeed to attain maximum contact with the ware.
4. The tissue is removed by dampening it with a water-moistened sponge.
5. After drying, the ware is glazed and then fired.

D. The Wet-ink Underglaze Decal

1. This type of decal is applied to bisque pottery ink side down while the ink bearing the design is still tacky. The inks are printed on thin tissue paper coated with gelatin.
2. With the decal in position on the ware, the back of the tissue is rubbed with a firm but flexible brush. Glycerine is used as a lubricant over the tissue to avoid tearing the paper and damaging the decal.
3. When the decal is in perfect contact, the tissue is removed by placing the ware in water or by using a water spray which will dissolve the gelatin size, thus releasing the tissue.
4. Glaze and fire the decorated ware, when it is dry.

E. Firing of Decals

1. Ware should be perfectly dry before it is placed in a kiln.
2. Decals are fired between 950°F. and 1550°F., depending on the ceramic ink used, composition and state of the object upon which the decal was placed. (Follow manufacturer's instructions.)
3. Firing should start at room temperature and gradually increase at a rate which will permit the vehicle and any printed cover coat of the decal to be driven off. Increase about 3° per minute between 500°F. and 700°F. to avoid blistering the decal.
4. After the maximum temperature for a particular type of ceramic decal has been reached, hold the fire at that temperature for a period of soaking heat. Do not cool the pottery too quickly in order to avoid dunting the ware.
5. The temperature range for glassware decals is 950°F. and 1250°F., depending on the kind of glass being fired.
6. The temperature for pottery decals ranges from 1200°F. to 1500°F. according to the decal type.
7. Gold and palladium require a lower firing range (1050°F. and 1250°F.).
8. For the best results when firing, especially between 300°F. and 900°F. the kiln should be vented. The resulting oxidizing atmosphere in the kiln will produce brilliant colors in the decal designs.

Application

Students can make their own decals, and apply the decals to their ceramic ware in individual, group, and mass production activities.

Students may fire identical decals at different temperatures and note the results obtained. This experiment will indicate the temperatures required to obtain the best results.

References

Application and Firing of Ceramic Decalcomanias. Pamphlet. Commercial Decal, 650 Columbus Ave., Mount Vernon, N.Y. 10550.

Handbook for the Ceramic Decorator. Pamphlet. Commercial Decal, 650 Columbus Ave., Mount Vernon, N.Y. 10550.

Kosloff, Albert. *Ceramic Screen Printing.* Ch. 6.

GLAZING

DEMONSTRATIONS AND OPERATIONS

Weighing a glaze recipe
Milling a glaze batch
Testing a glaze (sample firing)
Applying glazes to ceramic ware
  Dipping
  Pouring
  Spraying
  Brushing
Touching up raw glazed ware
Special glaze effects
  Spilling
  On-glaze painting (majolica, delft, faience)
  Blending
  Spatter
  Wax resist

RELATED INFORMATION

Glaze chemicals
Calculation of glaze formula
Glaze types
Fritted glazes
Glaze additives
  Binders or adhesives
  Suspenders
Glaze defects

SUGGESTED PROJECTS

Formulating an original glaze
Formulating a glaze family
Testing color blends
Line blends
Triaxial blends

SAFETY PROCEDURES AND PRECAUTIONS

Establish a system for marking and storing all materials, raw and processed.
Plainly mark all toxic substances.
Use as few toxic substances as possible.
Substitute insolubles for solubles.
Use frits whenever possible. (Fritting renders many toxic materials harmless.)
Establish procedures to control dust and vapors.
Establish procedures for safe handling of material and mechanical equipment.
Establish required procedure for personal hygiene.
  Guard against infection from cuts, etc.
  Wash hands after exposure to glazing materials.

ENRICHMENT

Use a salt glaze in a test kiln.
Experiment with reduction firing of glazes.

REFERENCES

Kenny, John B. *Complete Book of Pottery Making*. Ch. 10, "Glazes."
Norton, F. *Ceramics for the Artist-Potter*. Ch. 8, "Glazing."
Rhodes, Daniel. *Clay and Glazes for the Potter*.

LINE BLEND — Project Plan

What happens when you try mixing various proportions of two different colored glazes? Systematic experimentation would result in mixtures which form a line blend. This is an economical method for experimenting with and developing an original recipe.

TILE	1	2	3	4	5	6
GLAZES	Yellow 10	Yellow 8	Yellow 6	Yellow 4	Yellow 2	—
	—	Blue 2	Blue 4	Blue 6	Blue 8	Blue 10

MATERIALS

Powdered yellow lead glaze
Powdered blue lead glaze
Gum tragacanth
Black underglaze crayon
Six test tiles (bisque)

TOOLS AND EQUIPMENT

Triple beam balance
Glass slab
Palette knife
Glaze brush

PROCEDURES

Note: By marking the test tiles and recording data in a notebook, accurate records of glaze combinations can be kept for future reference. Large quantities of glaze mixtures are not necessary for experimental purposes.

1. On the back of the six test tiles mark the numbers one to six with the black underglaze crayon, for identification purposes. One may also record the glaze combination as in the illustration.
2. Weigh 10 grams of the powdered yellow lead glaze on the scale.
3. Place the weighed glaze on a clean, dry, glass slab, and add a drop or two of gum tragacanth.
4. Add a little water, and prepare the glaze for use by mixing it with a palette knife.
5. Brush a smooth coat of this glaze on the face of tile No. 1 and permit it to dry while recording the data in a notebook.
6. Prepare the second glaze combination by placing 8 grams of powdered yellow lead glaze on a glass slab. Add 2 grams of powdered blue glaze to the 8 grams of yellow glaze.
7. As with the previous glaze, prepare this mixture for use by adding gum tragacanth and water.
8. Brush this glaze combination on the face of tile No. 2, allow it to dry, and record the data.
9. Using 6 grams of powdered yellow lead glaze and 4 grams of powdered blue lead glaze, prepare the mixture in a similar manner.

10. Brush this glaze mixture on test tile No. 3. Permit the glaze to dry and record the data.
11. Using 4 grams of powdered yellow lead glaze and 6 grams of powdered blue lead glaze, prepare the fourth mixture in a similar manner.
12. Apply this glaze to the test tile No. 4, dry, and record the data.
13. Using 2 grams of powdered yellow lead glaze and 8 grams of powdered blue lead glaze, prepare the fifth lead glaze combination as before.
14. Brush the fifth glaze combination on test tile No. 5, let dry, and record the data.
15. Using ten grams of powdered blue lead glaze, prepare and apply the glaze to test tile No. 6.
16. Dry the tile and record the data.
17. Fire the test tiles simultaneously in the kiln at the same temperature and record the data.
18. When the kiln is drawn, examine all test tiles, and record observations in a notebook.

QUESTIONS

1. What would happen if each test tile was fired at a different temperature?
2. What would happen if 2 tiles were prepared for each of the 6 mixtures, and one set of 6 tiles was fired at a higher temperature than the first set of 6 tiles?
3. What effect would an underglaze decoration have if it were brushed onto the surface of these tiles?

ENRICHMENT

Using a line-blend procedure, experiment by varying some of the following ingredients: snowflake crystals, metallic oxides, illmenite, glass cullet, etc.

REFERENCE

Kenny, John B. *The Complete Book of Pottery Making*. Ch. 2.

KILNS: USE AND CONSTRUCTION

DEMONSTRATIONS AND OPERATIONS

Kiln Stacking
- Biscuit ware—shelves, posts, grog bedding
- Glost ware—stilts, pins, setters, saggers
- Pyrometric cones—setting and placement

Firing Cycle
- Venting
- Peak cutoff
- Holding
- Shutdown
- Controlled cooling

Unloading

Removing stilts and stilt fragments

Kiln maintenance
- Kiln wash
- Glaze chipping
- Element replacement
- Brick repair
- Mechanical repairs

RELATED INFORMATION

Kiln types
- Periodic
  - Front load
  - Top load
  - Elevator
- Continuous
  - Circular
  - Straight

Kiln fuels
- Electricity
  - Kanthol
  - Nichrome
  - Silicon carbide globar
- Combustible fuels
  - Muffles

Refractory materials

Kiln furniture

Kiln control devices
- Thermocouples
- Pyrometers
- Cut off devices
- Holding devices
- Timers

Pyrometric cones

Kiln history

SUGGESTED PROJECTS

Kiln furniture (shelves, supports, setters, etc.)

ENRICHMENT

Make a test kiln.

SAFETY PROCEDURES AND PRECAUTIONS

Establish understandable procedures for firing.

Assure stable loads.

Explain and guard against burn hazards.

Explain and guard against stilt cut hazard.

Test continually for electrical shock hazard.

Eliminate and prevent noxious fumes.

REFERENCES

Construction of Electric Furnaces for the Laboratory. Bulletin No. 458. Norton Co., New Bond St., Worcester, Mass. 01606.

Heating Elements for Electric Kilns. Bulletin No. 146. Norton Co., New Bond St., Worcester, Mass. 01606.

Kenny, John B. *Complete Book of Pottery Making*. Ch. 9, "The Fire."

Roy, Vincent. *Ceramics*. Section 6, "The Firing Process."

TEST KILN — Project Plan

A simple, effective, inexpensive, and thoroughly safe test kiln can be constructed from readily available materials, tools, and machines.

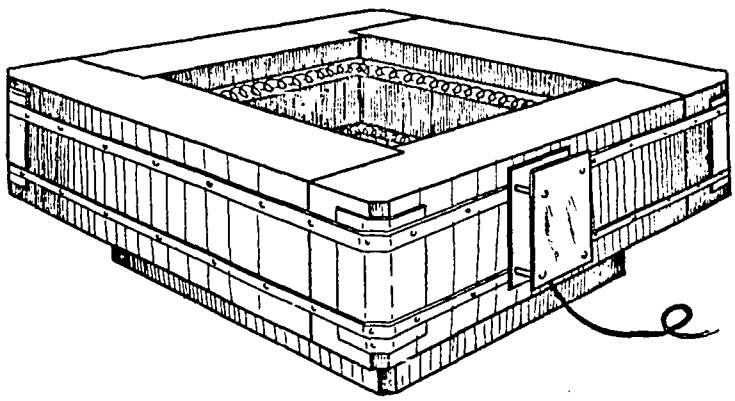

MATERIALS

8 magnesia fire bricks, K18
Perforated strap iron
15-gauge Kanthal A wire
Kiln cement
2 round-head brass machine screws, ½", No. 10-24
6′ asbestos covered wire extension cord with in-line switch
2 transite boards, ⅛" x 3" x 4"
4 eighteen gauge pieces of galvanized iron, 2" x 4"
8 eighteen gauge pieces of galvanized iron, 2" x 2"
6 flat-head steel machine screws, 1½" No. 10-24
18 steel nuts, No. 10-24
6 brass nuts, No. 10-24

TOOLS AND EQUIPMENT

Handee grinder or drill press
Bench hook
Vise
Scriber
Try square
Backsaw
3/16 drill bit
Screwdriver
Wrenches
⅜" coarse abrasive burr
Tinner's snips
Hand drill

PROCEDURES

1. Lay out cuts on fire brick as per drawings A and B. (See pages 58 and 59).
2. Make all cuts on bricks, using bench hook and back saw.
3. Route grooves to ½" depth, using abrasive burr in jig-held Handee grinder or drill press as per drawings C^1 and C^2. Use vacuum to collect dust.
4. Drill holes through terminal brick. See drawing C^2.
5. Lay out, cut, and bend galvanized iron corner pieces.
6. Assemble side wall brick, using kiln cement for joints.
7. Fasten two bands of perforated strap iron around wall. Install corner pieces and tighten with machine screws and nuts.
8. Join base brick together with cement and bands.
9. Install base brick in the bottom of kiln with kiln cement.

CERAMIC TEST KILN Sheet#1

A

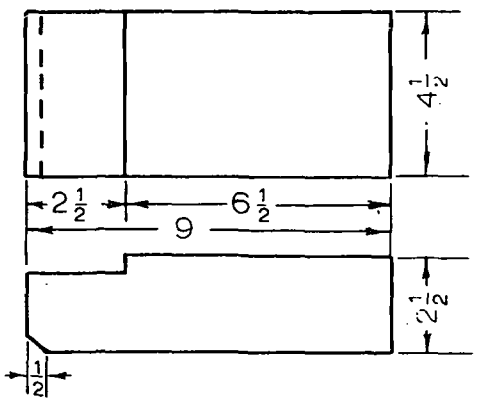

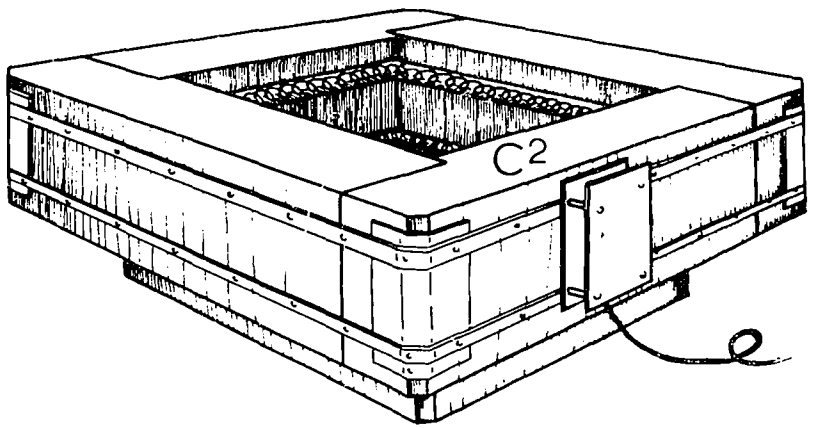

B

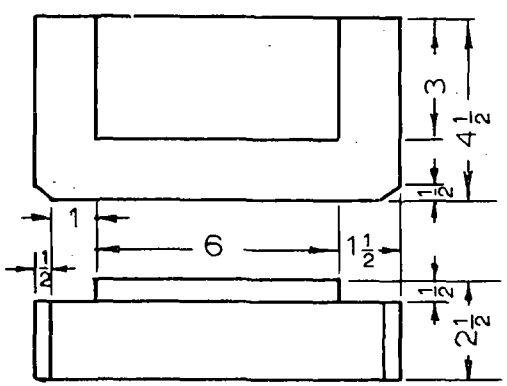

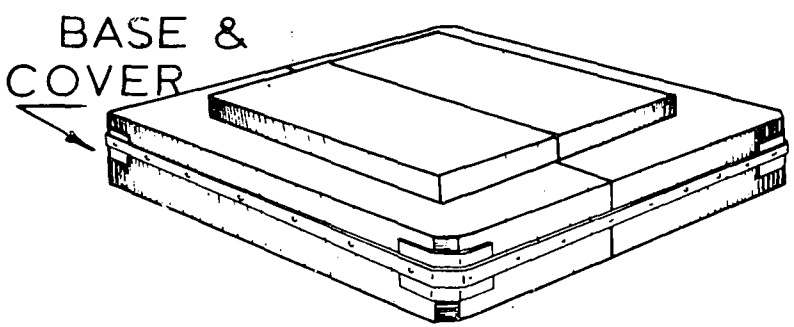

CERAMIC TEST KILN Sheet #2

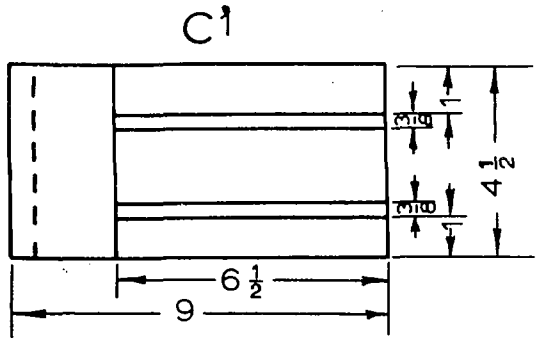

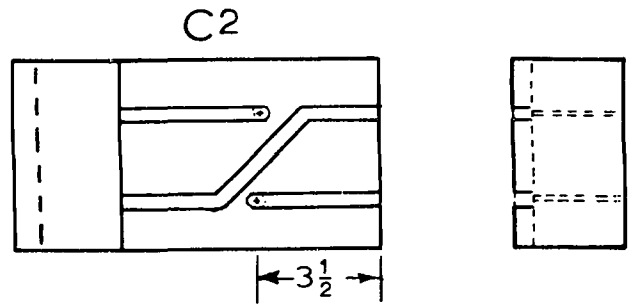

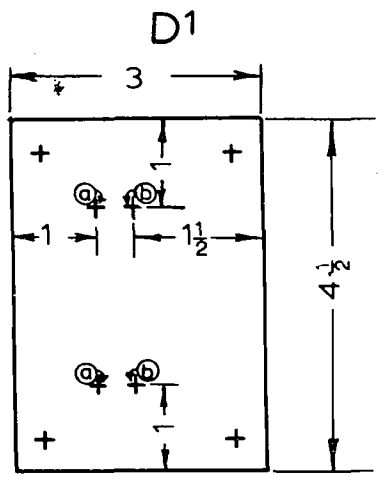

TERMINAL BOARD

ⓐ ELEMENT WIRE HOLES.

ⓑ TERMINAL SCREW HOLES.

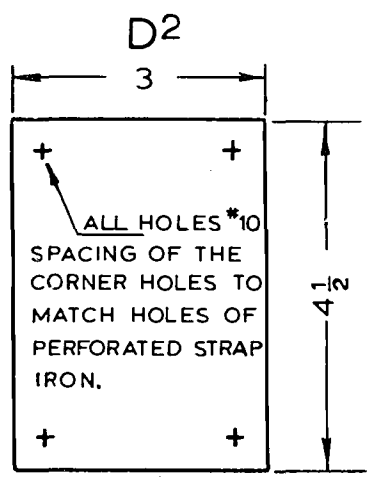

TERMINAL COVER

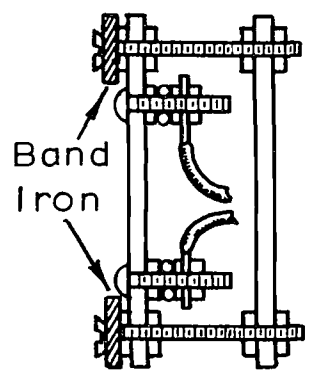

10. Lay out terminal and cover boards. Pick up corner hole location from strap iron, other holes as in drawing.
11. Drill all terminal board holes.
12. Loosen strap iron bands around wall, and insert flat head machine screws for mounting boards. Tighten the bands.
13. Thread and tighten 10/24 nut on each screw.
14. Install and fasten brass screws on terminal board.
15. Mount terminal board on steel corner screws.
16. Wind required length of 15-gauge Kanthal wire on 5/16″ mandrel, leaving 6″ of straight wire at each end. Double end over and twist to form thick wire.
17. Stretch coil to length of groove (48″, exclusive of ends).
18. Make staples of 3″ lengths of Kanthal wire.
19. Install and staple element wire into groove, passing ends through holes in terminal brick and terminal board.
20. Make one full turn of element wire around each terminal screw. Tighten with brass nut. Cut off excess wire.
21. Connect extension cord to terminal screws using another brass nut for each post.
22. Mount and tighten transite cover board onto screw posts with steel nuts.
23. Plug in line to 110v. circuit and test.
24. Assemble cover bricks as a base. Use as loose cover.

Operator using an optical pyrometer to check the temperature and heat radiation inside a kiln

4 Plaster

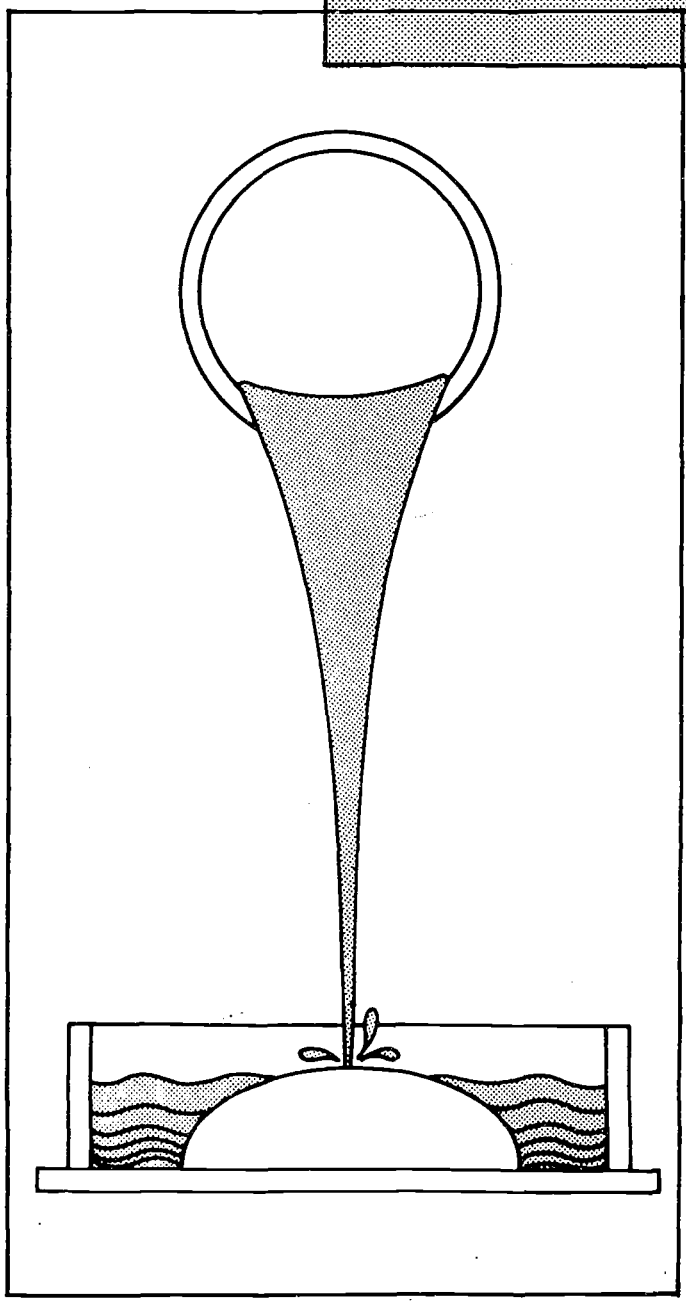

Gypsum, a mineral whose value was discovered by the Ancient Egyptians, is currently still serving man and his modern advanced technology.

The age-old uses of gypsum as a mortar and building material are still current. However, in recent years research and development of new and greatly improved processing methods have made gypsum a very versatile material. As an additive, it is used in paints, rubber, concrete, toothpaste; in soil it is used as a conditioner. The medical and dental professions have varied uses for plasters. As a material of creativity, architects, sculptors, and artists use it extensively. Many industries consider gypsum plasters as indispensable materials for the construction of models, molds, and finished casts.

MODEL MAKING

Demonstrations and Operations

Designing a model from original idea or sketch
- Make dimensioned working drawings of model
- Make templates drawings
- Make profile cutting tool drawings
- Make drawings of jigs

Construct templates
Construct profile cutting tools
Construct jigs
Mix plaster
Cast plaster
Splash casting of plaster
Turn plaster
- Potter's wheels—vertical turning
- Turning box—horizontal turning on shaft
- Lathe—horizontal turning on shaft

Screeding plaster
- Straight
- Around a template

Carving plaster—sculpting and hand scraping
Cast a model from a flexible mold

Related Information

Template materials
Profile materials
Gypsum—the basic raw material
- Chemical composition
- Properties (physical)
- Processing
- Processed gypsum products

Keene's cement
Plaster additives
- Accelerators
- Retarders
- Fillers

Flexible mold materials
Special jigs and fixtures

Suggested Projects

Carved model for irregular press mold
Screeded model for drain cast tray
Screeded model for solid cast tray
Lathe turned model (Keene's cement) drain cast vase
Hand carved model (science anatomy model)
Turned box-formed vase model (internal spindle)
Splash cast model of diorama
Model cast from flexible mold
Wheel turned model of cup

Safety Procedures and Precautions

Use machine guards wherever applicable.
Collect waste plaster in a container; allow it to set; dispose as solid waste. Never pour it into sink.
Smooth all edges of wood and metal to prevent slithering and splintering.

References

Norton, F. H. *Ceramics for the Artist-Potter.* Ch. 19, "Mold-Making."
Roy, Vincent. *Ceramics.* Unit 11, "Making Molds."

SCREEDED MODEL FOR POTTERY PLANTER — Project Plan

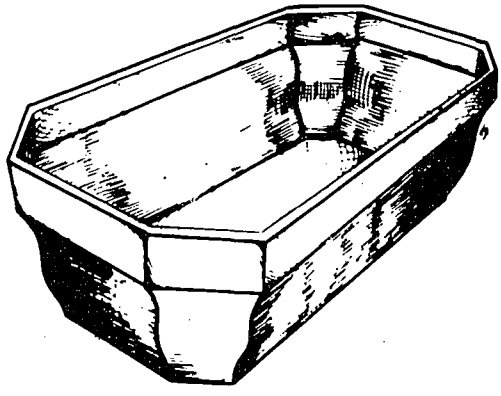

Screeding is a method of shaping plaster using a profile cutting tool which is guided along or around a template upon which soft plaster has been heaped. The actual screeding (shaping) is done when the plaster is in a plastic condition similar to soft cheese. Properly made profile tools and several finishing coats of plaster yield very smooth, uniformly shaped, solid forms of plaster which make excellent models. High quality models, in turn, yield good plaster molds for the production of high quality ceramic ware.

MATERIALS

3/32″ zinc plate
¾″ plywood
Beeswax
¼″ tempered masonite
Water
Plaster
Emery cloth
Crocus cloth
Wet grade sandpaper
½″ R.H. wood screws, No. 5
1″ brads

TOOLS AND EQUIPMENT

Vise
Jigsaw
Bridge sled
Fretsaw blades
Jigsaw blades
Scriber
Rule
½″ round file
Jeweler's files
Hand drill or drill press
Drill bits

PROCEDURES

1. Lay out design of top view of planter on masonite to form template.
2. Lay out design of profile cutting tool plate on zinc.
3. Lay out design of profile cutting tool support on plywood.
4. Use jigsaw to cut template, profile plate, and support.
5. Drill mounting holes in profile plate (zinc).
6. Assemble profile plate and plywood support with ½″ No. 5 R.H. wood screws. (See illustration.)

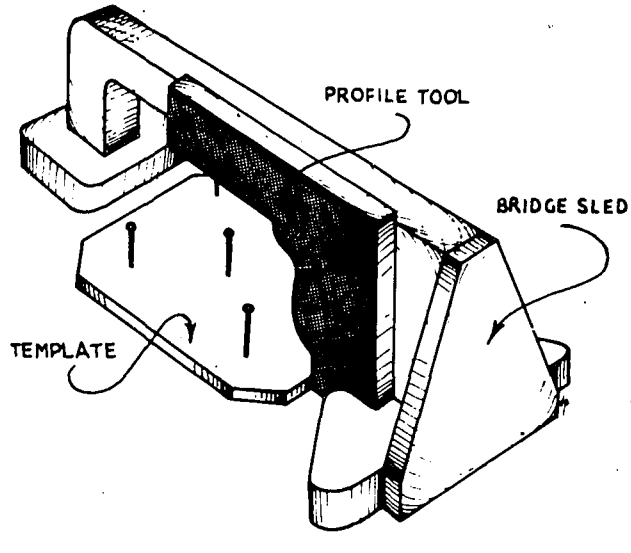

7. Secure profile unit to bridge sled in a perfectly horizontal position using clamps or screws. (See illustration.)

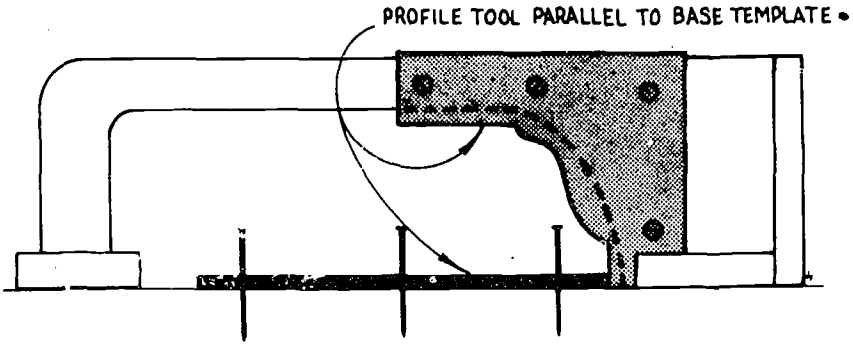

8. Fasten masonite template to flat work surface with brads to prevent movement of template during screeding. All brads to protrude ¼″ above surface of masonite to serve as anchors for plaster.
9. Mix plaster. (See instructions for mixing plaster.) As it thickens, heap directly onto template. Build to necessary height.
10. When plaster becomes plastic, move the sled so that bottom corner of the profile cutting tool touches the edge of the template. Guide the sled around so that the tool always maintains contact with the template. The motion will screed (cut) the plaster to the desired shape. Excess plaster is to be continually removed from the edge of the profile tool.

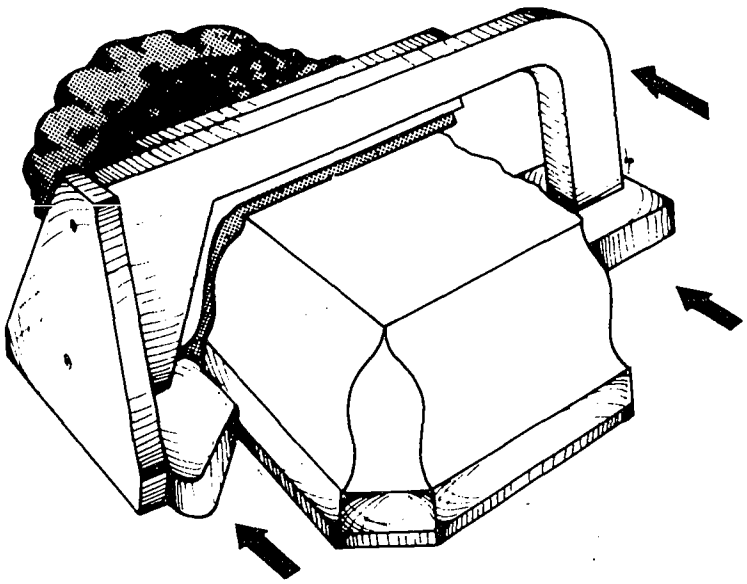

11. Mix a second batch of plaster. When it is thoroughly blended but still loose, pour it directly over the model and screed the surface again. Repeat if necessary.
12. Allow plaster model to set.
13. Pry model and template from work surface, and allow it to dry thoroughly.
14. Separate template from model by pulling brads through the masonite template from the underside.
15. Smooth plaster model with water grade sandpaper No. 220. Use wet or dry.
16. Seal with lacquer and use.

MOLD MAKING

DEMONSTRATIONS AND OPERATIONS

Design mold
- Slip-casting molds (all require use of a model)
  - One-piece drain mold
  - Two-piece drain mold
  - Multipiece drain mold
  - Two-piece solid casting mold
- Press molds (all require use of model)
  - One-piece spring mold
  - Two-piece mold (wet ram pressing)
- Jigger molds (require plaster-cutting profile tool)
  - Hollow ware
  - Flatware

Make model (slip-cast and press molds—refer to Model Making, page 62)
Make plaster cutting tool (jigger molds)
Make a suitable cottle
Mix and pour plaster (refer to Mixing Plaster, page 71)
Trim plaster
Cut joggles
Size plaster

RELATED INFORMATION

Plaster sizing materials
Mold types
Dental and medical uses

SUGGESTED PROJECTS

Slip-cast molds
- All varieties of drain molds
- Solid-casting molds

Press molds
Jigger molds

SAFETY PRECAUTIONS AND PROCEDURES

Splashing plaster
Dessicating on direct contact with skin

ENRICHMENT

Make a case mold.

REFERENCES

Casting with Plaster and Hydrocal Gypsum Cements. IGL Bulletin No. 350, United States Gypsum Co., P.O. Box 927, Clark, N.J. 07066.

Kenny, John P. *The Complete Book of Pottery Making.* Ch. 5, "Molds."

Norton, F. H. *Ceramics for the Artist-Potter.*

HOLLOW WARE JIGGER MOLD—Project Plan

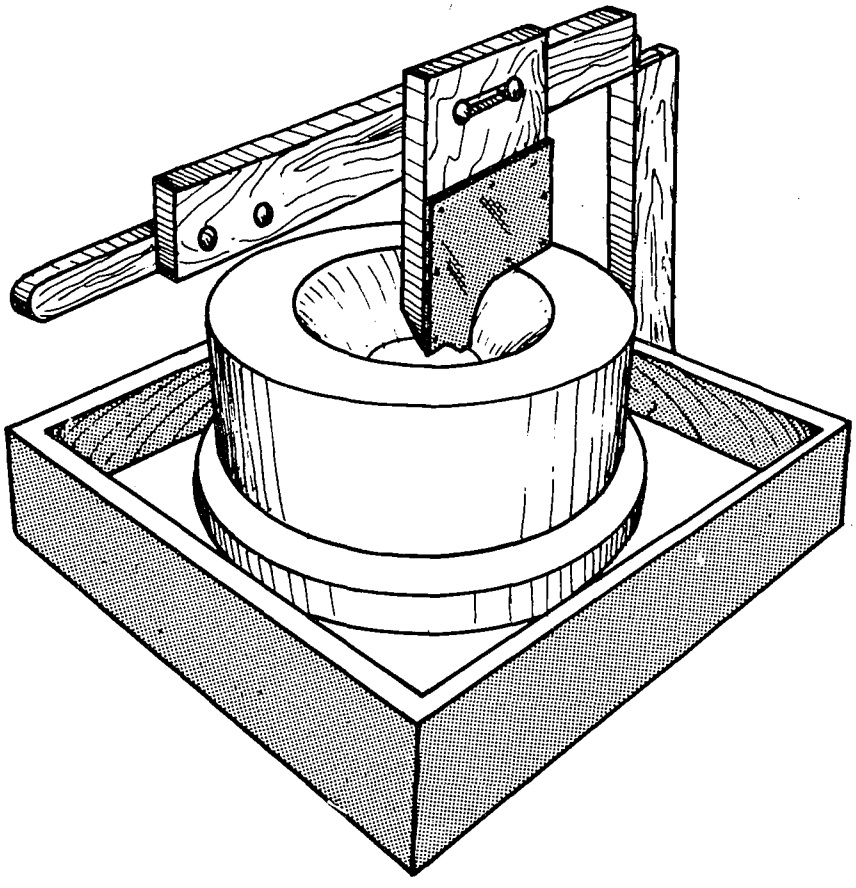

A design for a hollow ware jigger mold must be created with the limitations of the available equipment in mind. Factors to be considered are: the shape of the wheel head, the jigger arm arc, and the clearance of the fully depressed jigger arm and the wheel head. To shape a hollow ware jigger mold, a profile cutting tool is fastened to the jigger arm and lowered into a rotating mass of plastic plaster resting upon the wheel head. It is evident that the designing of the profile cutting tool and of the mold is done simultaneously. The preparation of the cutting tool must naturally precede the making of the mold itself.

PROFILE CUTTING TOOL

MATERIALS

No. 16-gauge sheet zinc
Bluing compound
Beeswax
½″ No. 5 R.H. wood screws
¾″ wood for backup support

TOOLS AND EQUIPMENT

Jeweler's files
Scriber
Jigsaw
Jeweler's saw blades and frame
Coping saw blades and frame
Board
Vise

PROCEDURES

1. Design tool shape. (See drawing.)

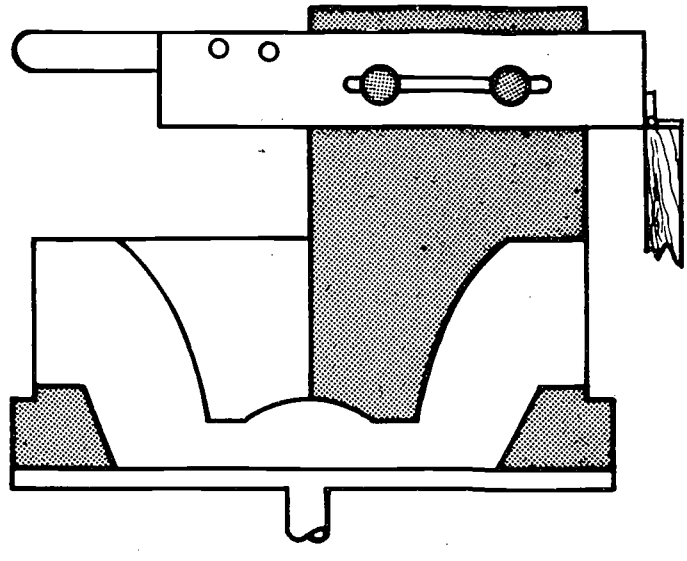

2. Make tracing.
3. Adhere tracing to sheet zinc. Use rubber cement.
4. Rest zinc sheet on V board. Cut to shape, using jewelers' saw dressed with beeswax.
5. Cut wood support to shape using coping saw or machine jigsaw.
6. File edges of zinc profile smooth and square. Then smooth with fine emery and crocus cloth.
7. Drill holes for No. 5 screws in zinc plate.
8. Fasten zinc profile to wood support using ½″ No. 5 R.H. wood screws.
9. Seal surface of wood support.

CUTTING A PLASTER MOLD

MATERIALS

Plaster
Water
Vaseline

TOOLS AND EQUIPMENT

Profile cutting tool
Plaster cutting tools
Jigger machine
Wheel head equipped with cup
Joggles or key
Platform scale
Mixing bowl
Clamps
Maul stick
Mixer
Timer
Sifter
Cottle

PROCEDURES

1. Locate and fasten profile tool onto jigger arm. Then raise arm so that tool is away from wheel head.
2. Apply vaseline to the surface of the wheel head.
3. Set up and fasten cottle around the wheel head.
4. Machine mix plaster.
5. Pour plaster into cottle.
6. Remove cottle as soon as plaster becomes firm enough to hold its shape.
7. Start machine, causing plaster to spin.
8. Lower jigger arm allowing profile tool to cut into the rotating plastic mass of plaster. Remove accumulation of plaster as required (during cutting operation), until the jigger arm is fully depressed. Raise arm.
9. Trim outside surface of mold with plaster cutting tools and maul stick.
10. Allow plaster to set before removing from wheel head.
11. If necessary, mold surface may be finished or smoothed with No. 320 wet grade sandpaper, wet or dry.
12. Allow mold to dry and cure at least 24 hours before use.

SAMPLE DEMONSTRATION LESSON PLAN

Mold for Drawer Pull

Aim: How to make a wet ram plaster mold for a drawer pull.

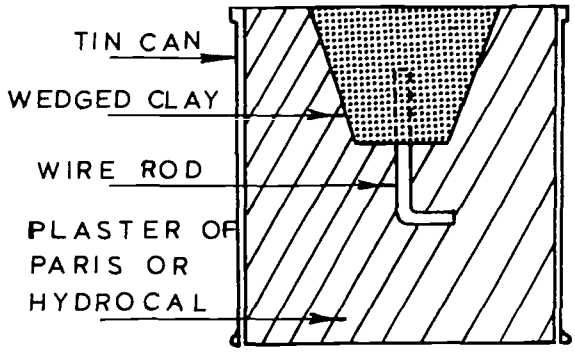

Materials

Clay model of drawer pull
Tin can
3" No.8-gauge metal rod bent to a right angle ½" from one end
Water
Piece of plate glass
Straightedge
Hydrocal plaster

Visual Aids

A variety of completed, molded projects, enlarged charts showing the mold, the model in place on the glass, the plaster (hydrocal) filling, the can, the clay pieces holding the can to the glass, and the chalkboard

Motivation

Contrast the production of a single drawer pull by hand (in terms of time, effort, and cost) with the production of a dozen mass produced drawer pulls.

How can we insure the exact duplication of all the drawer pulls?

Procedures

1. Make the model of the drawer pull.
2. Insert the metal rod into the narrow end of the model to the required depth.
3. Moisten the larger end of the model to prevent movement when the hydrocal is poured, and secure it to the plate glass.
4. To use the tin can as a cottle, remove the top and bottom lids. Remove all burrs.
5. Place the tin can over the model so that it is centered and rests firmly on the glass.
6. Fasten the can to the glass by placing moist clay around the outside rim of the bottom of the can.

7. Mix and pour the hydrocal (see directions for mixing hydrocal) so that it is level with the top edge of the can. Strike off the extra hydrocal with a straightedge.
8. Allow it to dry.
9. Remove the clay model from the mold, leaving the metal rod embedded in the plaster.

Summary

When is it desirable to make a wet ram mold?
Why is the tin can a necessary part of the mold?
Why should the metal rod remain in the mold?
What could happen to the model in the mold if it were not firmly secured to the glass during the pouring of the hydrocal?

Application

Each pupil can design and make a mold suitable for a project.

Assignment

Make a neat drawing in the student's notebook showing a design.
List the tools and materials needed to make a ram mold.
Determine the cost of the hydrocal used to make the mold.
Explain why we use hydrocal instead of any other plaster.

Safety

Care in handling the sharp-edged tin can.
Disposing of excess plaster; being careful never to use the sink.
Care in handling and cleaning the mold to avoid scratching the walls of the cavity.

References

Norton, F.H. Elements of Ceramics. Ch. 11, "Forming Methods."
Your Guide to Superior Results with U.S.G. Pottery Plasters and Gypsum Cements. Bulletin No. 333. United States Gypsum Co., P.O. Box 927, Clark, N.J. 07066.

Charts and Literature

Ram Mold Co., 25 Snyder St., Springfield, Ohio 45504.
F.J. Stokes, 385 Chestnut St., Union, N.J. 07083.

SAMPLE DEMONSTRATION LESSON PLAN

Mixing Plaster

Aim: How to mix plaster.

Materials

Dry, uncontaminated plaster

Drinkable, cool water

Tools and Equipment

For hand mixing
- Scoop
- Sifter
- Platform scale with one-ounce divisions

Mixing container (flexible plastic)
Rubber bowl scraper
Pitcher

For machine mixing
- Items for hand mixing

Timer
Mechanical mixer

Note: Industrial mixers are available for large batch mixing of 25 pounds or more of plaster. Smaller batches between one and 25 pounds can be readily mixed mechanically, by utilizing either a portable hand drill or a food mixer equipped with a suitable propeller blade. The recommended propeller should have three blades with sufficient pitch to force the slurry downward in the mixing container. Several diameter containers and proportionally sized propellers should be available to provide the capability of mixing plaster batches of varied volumes. Propellers of 3, 4, and 5 inch diameter attached to shafts of varying lengths are recommended.

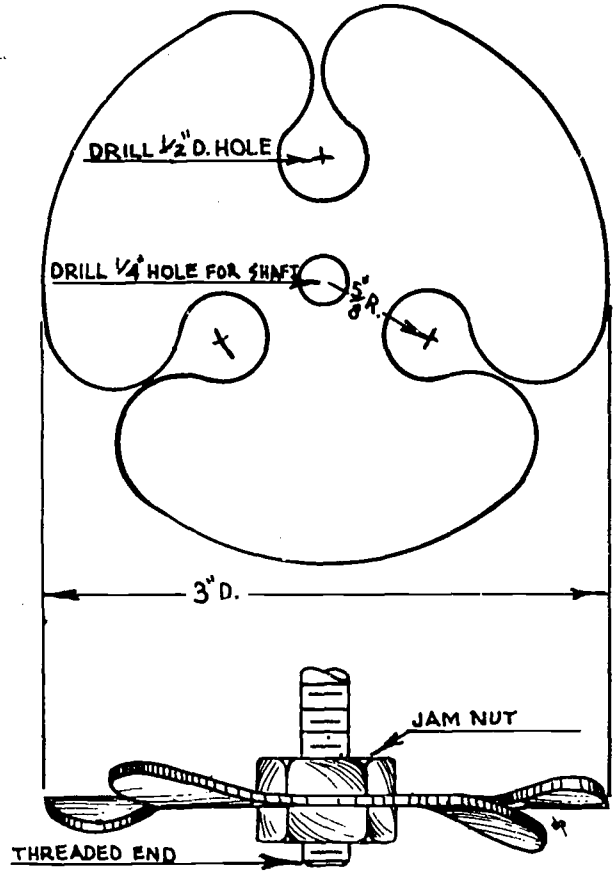

Visual Aids

Photographs or projecturals of industrial equipment. Illustrations of position of mixing blade for hand mixing; height, angle, and location of propeller for machine mixing. Chart of plaster-water ratios for various plasters.

Motivation

The mass production of clay products depends almost entirely upon the availability of high quality plaster molds. So that all production molds have the same working characteristics, definite procedures should be adhered to consistently.

Procedures

1. Determine the volume of plaster required.
2. Determine the ratio of plaster and water by weight.
3. Place mixing container on scale platform, and adjust scale to register zero.
4. Pour water into the mixing container until the required quantity is reached.
5. Use scoop or sifter to obtain plaster from the storage bin, and sift plaster directly into water until the combined required weight is attained.
6. Remove mixing container from the scale and allow the plaster to soak (or slake) into the water completely. Allow 2 to 4 minutes for a complete soaking period.
7. Mix by hand: Insert the rubber bowl scraper completely into the mix, and stir until all lumps are reduced and a uniform slurry is attained. Be careful not to introduce air into the mixture.

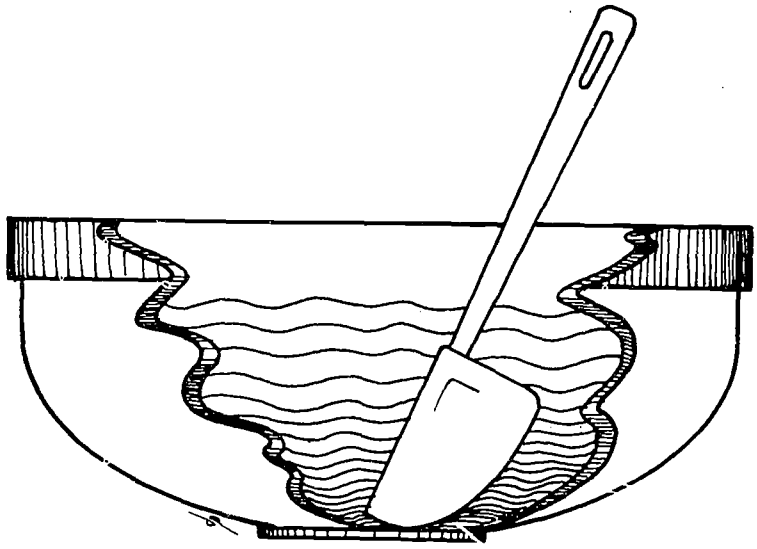

8. Or mix mechanically: Insert propeller blade immediately above the bottom of the container. Start mixer and continue mixing for 2 minutes. (Use timer.) Plaster should attain a creamy consistency at this point. The propeller shaft should be set at a 15° angle, slightly off center of the mixing container. Proper mechanical mixing assures complete agitation of the entire slurry and the removal of entrapped air.

9. Pour the mixed plaster slurry from its mixing container into the cottle (supporting form or container). While the plaster is being poured, the cottle should be agitated to prevent the entrapment of air. It may also be necessary, if detail of the mold is intricate, to brush plaster onto the model or case mold surface before pouring, to assure the elimination of entrapped air.
10. The setting or hardening of plaster proceeds automatically from the moment water and plaster are combined. The entire chemical reaction takes from 25 to 35 minutes. Heat is generated by the reaction, and the presence of heat roughly indicates the moment when actual setting occurs. For most plasters a slight but important expansion of the mass also occurs at this point. This expansion permits the release of plaster from its model or case mold. Complete curing of plaster takes place within 24 hours. Cottle or containers may be removed when the setting heat subsides. The newly cast plaster should not be handled or used until the full 24 hour curing time has expired.

Summary

How do you determine the quantity of plaster and water required to fill a given volume?
Why must plaster be added to water, and not the water to plaster?
Why should plaster be allowed to slake?
What can be done to eliminate air bubbles from the plaster immediately prior to pouring?
How can we determine when plaster begins to set?
How soon can plaster be used after it is cast?

Application

In any situation where a model, cast, or mold is required, plaster can be prepared by either method described in this section.

PLASTER MODELS AND MOLDS — Related Information Sheet

Plaster has proven to be the most suitable material for molds used in the clay-forming industries. The inherent properties of this versatile material make it useful in various stages of the production of clay ware.

The most important properties of basic plaster are:

Low cost
Malleability
Ability to take and impart fine detail
Good absorbing, releasing, and drying characteristics
Durability
Ability to attain a smooth, finished surface
Dimensional stability
Slight expansion in drying process

The United States Gypsum Company has developed a variety of plasters. These are classified according to four types:

Low-expansion plasters—for tooling
Super-hard cements—for dies
General purpose cements—for pattern and model making
High-expansion plasters—for shrinkage compensation

Low-Expansion Plasters

Ultracal 30. This type is recommended when extreme accuracy as well as surface hardness is required. Its plasticity and gradual set make it ideal for splash casting. It is colored green for identification. Its strength and hardness are superior to that of Hydrocal A-11.

Ultracal 60. This has the same characteristics as Ultracal 30, except that it has a setting time of about one hour. It is designed for jobs requiring additional working time.

Hydrocal A-11. This material has a short period of plasticity and will set in less than a half hour. Its high strength makes it suitable for patterns and models.

Super-Hard Cements

Hydro-Stone. This is the hardest and strongest of the gypsum plasters. It is recommended for dies requiring extreme surface hardness.

General Purpose Cements

Industrial White Hydrocal. This is a general use plaster, with a setting time of less than a half hour. It has a tendency to tear when it is used for screeding.

Pattern Shop Hydrocal. It has a long period of plasticity and can be screeded, carved, or worked in a partially set state.

High-Expansion Cements

Medium-High Expansion. This plaster expands 1/16″ to 3/16″ per foot as it sets. The expansion is uniform in all directions.

When pottery is designed, plaster is used extensively for the construction of models or three-dimensional representations of the designer's ideas. Tooling for the mass production of pottery requires the creation of a block mold, a case mold, and production molds for the faithful reproduction of a given design for the entire production run of that item. The block mold is an original mold made directly from the model and represents a reverse of the model. The case mold, made from (and a reverse of) the block mold, represents the form of the original model. The work or production molds are then made from the case mold in large quantity and are duplicates of the block mold. The production molds yield clay duplications of the original model.

Various improved plasters have been formulated so that specific properties of the material are altered to meet special requirements.

Molding plaster especially suited to making original models is a soft, very plastic, easily carved plaster, which is thoroughly uniform throughout its entire mass.

Case molds, which must be extremely durable and still faithfully reproduce the finest of detail, should be made from plasters which yield a very hard surface. USG Hydrocal is one such type of plaster.

Work molds, which above all else must possess high absorption, releasing, and drying characteristics, are made from specially formulated pottery plasters.

Casting plasters and other industrial plasters are available, making possible extremely wide and varied use of this relatively simple and yet versatile material.

Successful plaster mold work depends upon these important factors:

Use the proper type of plaster for each model or mold.
Plaster must be kept dry and free from contamination during storage.
Water used for mixing must be potable and cool (warm or hot temperatures accelerate setting).

Tools, containers, and equipment used for mixing must be very clean since old, set plaster which clings to tools or equipment accelerates setting. Mixing procedures must be definite and consistent.

PLASTER CASTING — Related Information Sheet

Many decorative and utilitarian articles are made from plaster with the use of a casting process to shape or form the articles. Figurines, lamp bases, novelties, statuary, art objects, and the like are only a few examples of the numerous items made in this manner.

The casting process involves the proportioning of plaster and water, forming a slurry or mixture, pouring or otherwise introducing the slurry into suitable molds, allowing the plaster to set, removing the casts from the molds, trimming or smoothing the casts, drying, and finally finishing or decorating the casts in a suitable manner.

Specially formulated plasters are available for this area of ceramic activity, wherein the finished product is made from gypsum plasters. Plasters that are very hard, dense, smooth, chip resistant, and capable of reproducing fine detail are used for critical, high quality products. Where wider tolerances are permissible, softer, more porous plasters can be used successfully.

Generally two types of molds are utilized in plaster-cast manufacture: rigid and flexible molds.

Rigid molds are somewhat restrictive in that they have little or no elasticity to accommodate the natural expansion of gypsum plasters. Only the simplest of shapes can successfully be cast, and these must be free of undercuts. To make removal of casts possible, molds must often be made up of several sections.

Flexible molds, with natural elasticity to accommodate the expansion of plaster, are made from a variety of materials. Glue, gelatine, latex, and other specially formulated flexible mold materials are easy to use and are readily available.

In the casting process, it is necessary to prevent adhesion of plaster to the surface against which it sets. Wherever porous surfaces are used, they must be completely sealed with successive coats of either lacquer or shellac thinned to prevent the loss of detail. To achieve successful release of the plaster cast from the sealed mold surface it is necessary to use a parting compound. Among the flexible mold materials, gelatine and glue molds require the use of parting compounds. Vaseline (diluted with kerosene) and stearine are both widely used as parting media for the plaster-casting process. Most other flexible mold media do not require parting compounds.

5 Cement

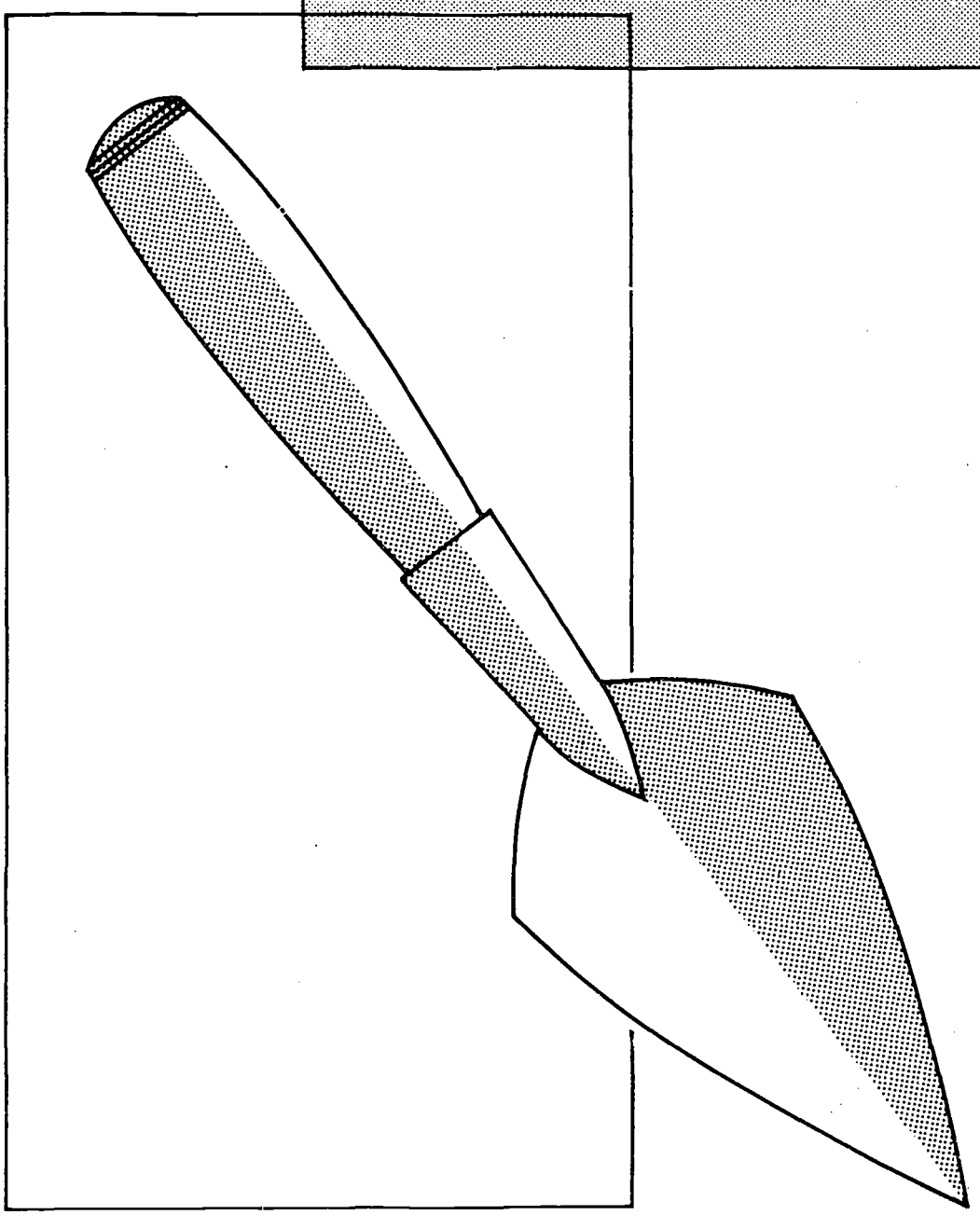

Cement and its related products, mortar and concrete, have contributed greatly to the construction industry, for these products are among the most important building materials. Information basic to understanding and working with cement is given in this chapter. Activities in this area enable students to develop fundamental skills in mixing the ingredients, preparing the form, pouring the aggregate, and finishing the surface of cement products.

The skilled craftsman working in this field is likely to find employment commensurate with his abilities and interests in the New York area. Careers may be found in engineering, construction, and various other trades. Moreover, skill in cement craft is also of value to the homeowner.

CEMENT MAKING

DEMONSTRATIONS AND OPERATIONS

Measuring the ingredients
Mixing the ingredients
Coloring the mixture
Pouring the mixture
Leveling and finishing the surface
Curing the mixture
Making the mold
Applying the mold release

RELATED INFORMATION

Sources of the raw material
Proportions of aggregates, cement, water
Use of concrete (building blocks, prestressed construction, shell construction, footings, foundations, slabs, roads, etc.)
Air-entrained concrete
Jobs in industry
Ready-mixed concrete
Comparison of cement, mortar, and concrete

SUGGESTED PROJECTS

Flower box
Garden ornaments
Patio blocks
Paper weight
Boat anchor

SAFETY

Care in lifting heavy objects
Safe handling of cement and aggregates
Proper cleanup of tools and equipment

REFERENCES

Ashcroft, Cyril C., and Easton, J.A.G. New York: St. Martin's Press, 1959. *General Shop Work*. Section 378-388, "Concrete Work."

Cement and Concrete Reference Book. Pamphlet. Portland Cement Association, 33 W. Grand Ave., Chicago, Ill. 60610.

Gerbracht, Carl, and Robinson, Frank. *Understanding America's Industries*. Bloomington, Ill.: McKnight & McKnight, 1962. Ch. 5, "Ceramics and Related Industries."

Films

Bridging the Centuries. Modern Talking Picture Service, 3 E. 54 St., New York, N.Y. 10022.

Cement Workers. Department of Commerce, 112 State St., Albany, N.Y. 12207.

From Mountains to Microns. Modern Talking Picture Service, 3 E. 54 St., New York, N.Y. 10022.

CONCRETE PATIO BLOCKS — Project Plan

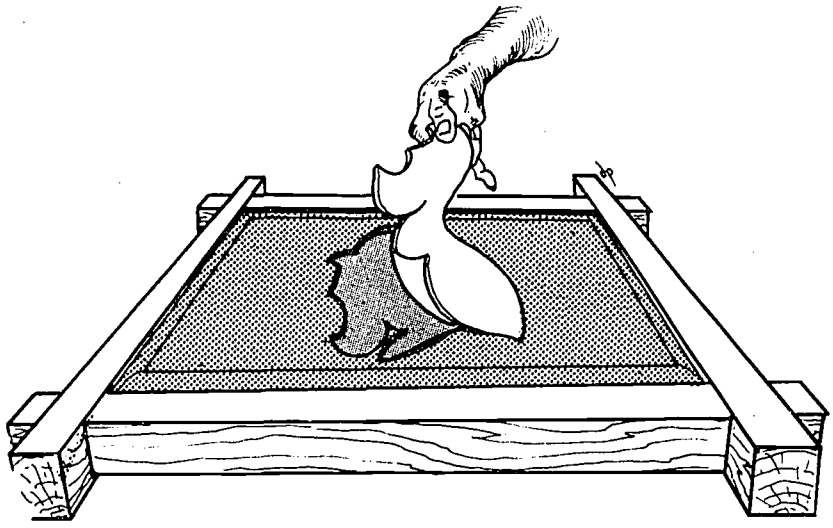

This concrete project is designed to give the student an opportunity to work with forms, and to prepare and cast concrete in an area requiring a minimum of space.

MATERIALS

4 pieces of lumber
Sand
Cement
Grease
Water
Mineral Colors
Chicken wire or coat hanger wire
Tar paper

TOOLS AND EQUIPMENT

Strike
Wood float
Steel float
Edging tool
Plastic basin or pail

PROCEDURES

1. Cut cross-lap joints in stock as in sketch. This will permit the form to be assembled and disassembled readily for repeated use.

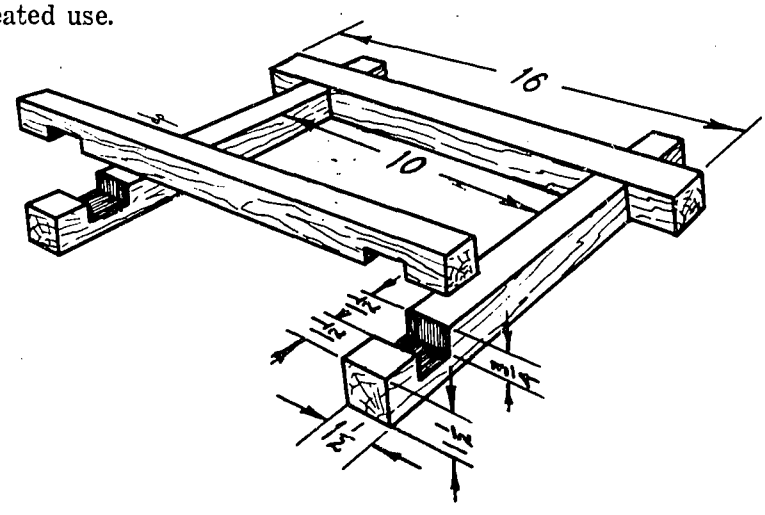

2. Grease inside surfaces of the form, and place the form on tar paper. Check to determine that the form is on a flat surface and does not rock.
3. Dry mix 3 parts sand, one part cement, and mineral color in a plastic basin.
4. Add sufficient water mix to obtain the proper consistency and workability.
5. Pour into form.
6. Imbed chicken wire or coat hangers into the mix for added strength.
7. Level with a strikeboard.
8. Use a wood float on the surface (in a half-arc motion) if a rough surface is desired.

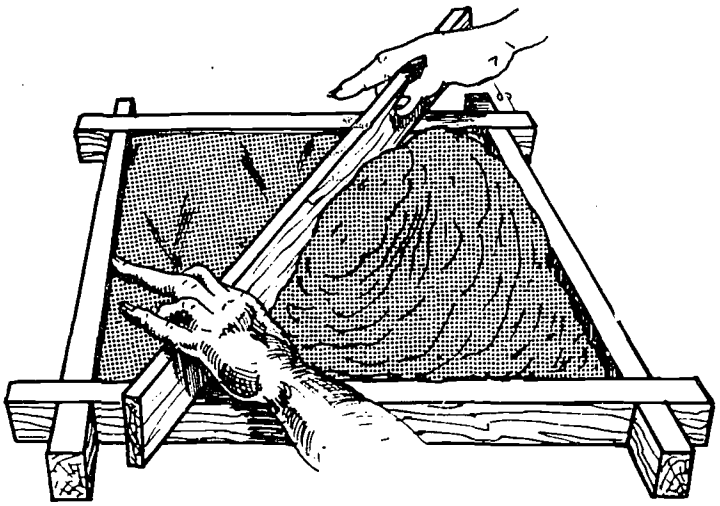

9. To obtain a smooth surface use a steel float after concrete has set in an hour. Keep leading edge of float slightly raised.
10. Round off edges with edging tool.

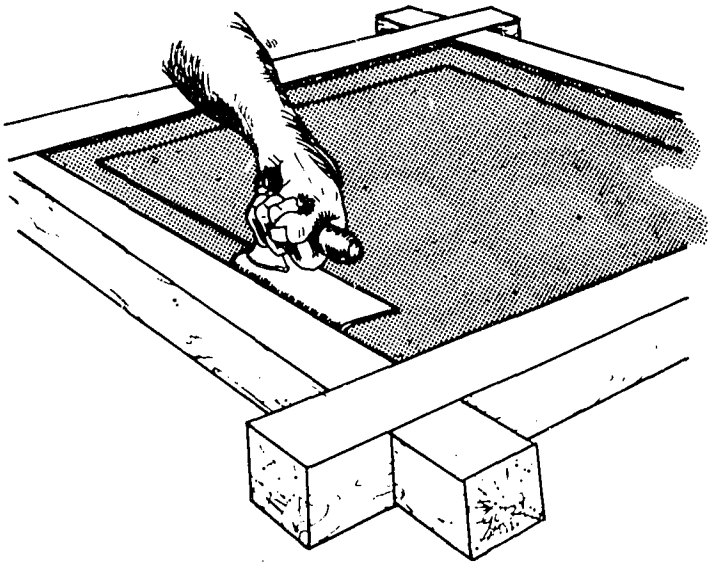

11. Disassemble forms after 24 hours.

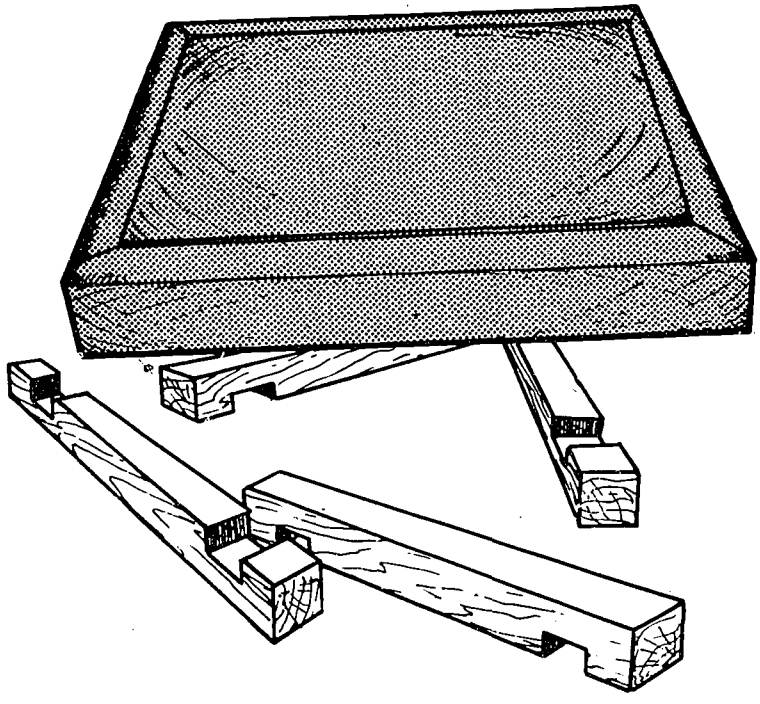

ENRICHMENT

The patio block may be decorated by impressing a design cut from heavy roofing paper, or a circular design made with a tin can. The cutouts should be placed on the concrete after the water sheen has disappeared and trowelled flush with the surface.

When block is cured, the cutouts may be removed with a knife blade, leaving the impression. Dates of family events or the house number may also be imprinted in the block.

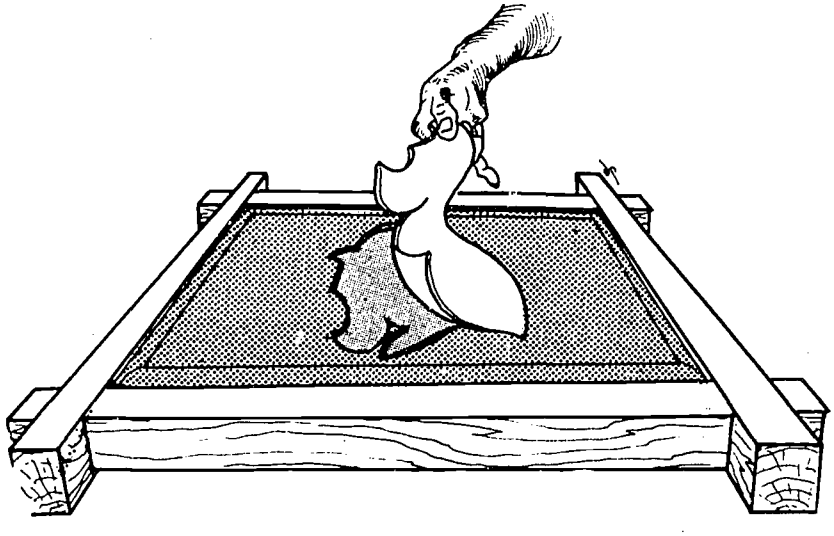

AIR-ENTRAINED CONCRETE — Related Information Sheet

Many of you may have noticed concrete roads or sidewalks that were scarred by surface scaling and chipping. This deterioration is caused by the expansion of water when it freezes within the concrete. The general practice of using salt (calcium or sodium chloride) and other chemicals to melt ice on the streets will hasten the scaling of a concrete surface. This is caused by the accelerated thawing action of the chemicals.

A method to prevent scaling or disintegration of concrete was developed by the use of air-entrained concrete. Nonscaling is achieved either through the use of air-entraining Portland cement, or the introduction of air-entraining agents as the concrete is mixed at the construction site. Air-entraining Portland cement is made by mixing small amounts of soaplike or fatty resinous materials with normal cement clinker during the final grinding stage in cement manufacture.

The amount of entrained air is usually about 5% of the volume of concrete and is sufficient to produce billions of microscopic air cells per cubic foot. These bubbles are not interconnected and are well distributed throughout the mass. Normally as water in concrete freezes, it expands, causing sufficient pressure that can rupture concrete. In air-entrained concrete the microscopic air cells relieve internal pressure on the concrete by providing minute chambers for the expansion of water during the freezing process.

Air-entrained concrete weighs somewhat less than normal concrete of the same consistency. Its flexural strength may be from 5 to 15 per cent lower than that of normal concrete of equal cement content. Even with this difference in strength, it is excellent for pavement slabs. When greater strength is required, it is obtained by increasing the cement content. The Portland Cement Association, a research and development association of cement manufacturers, recommends the use of air-entrained cements "for the construction of cement pavements, bridge floors, etc. in areas where severe frost action prevails or where the repeated application of sodium chloride or granular salts is anticipated."

This air-entrained concrete is almost free from sedimentation and bleeding. As a result, there is little free water on the surface for the finishing operations. This makes it essential to perform the finished operations as rapidly as possible; otherwise the surface will dry and harden, thus making it difficult to achieve a properly finished surface. This concrete is stickier than normal concrete, and there is a tendency at times for this material to adhere to the screeds of a finishing machine and cause a torn surface. This is overcome by oscillating the screed as it is moved forward. For hand finishing, steel floats give better results than wooden floats.

The use of air-entraining agents produces concrete that is highly resistant to severe frost action and cycles of freezing and thawing. They also increase the workability and durability of the concrete. For these reasons air-entrained concrete is now specified for use in the construction of highways, bridges, and other structures.

References

Air-Entrained Concrete. Pamphlet. Portland Cement Association, 33 West Grand Ave., Chicago, Ill. 60610.

Cement and Concrete Reference Book. Pamphlet. Portland Cement Association, 33 West Grand Ave., Chicago, Ill. 60610.

Elimination of Pavement Scaling by the Use of Air-Entraining Portland Cement. Pamphlet. Portland Cement Association, 33 West Grand Ave., Chicago, Ill. 60610.

Enrichment

Have students make a small test slab of air-entrained concrete by adding approximately 3% of beef tallow or fish oil stearate to the concrete mixture. Check with a microscope for the minute air cells, and compare with normal concrete. Compare their ability to withstand alternate freezing and thawing.

6

Glass

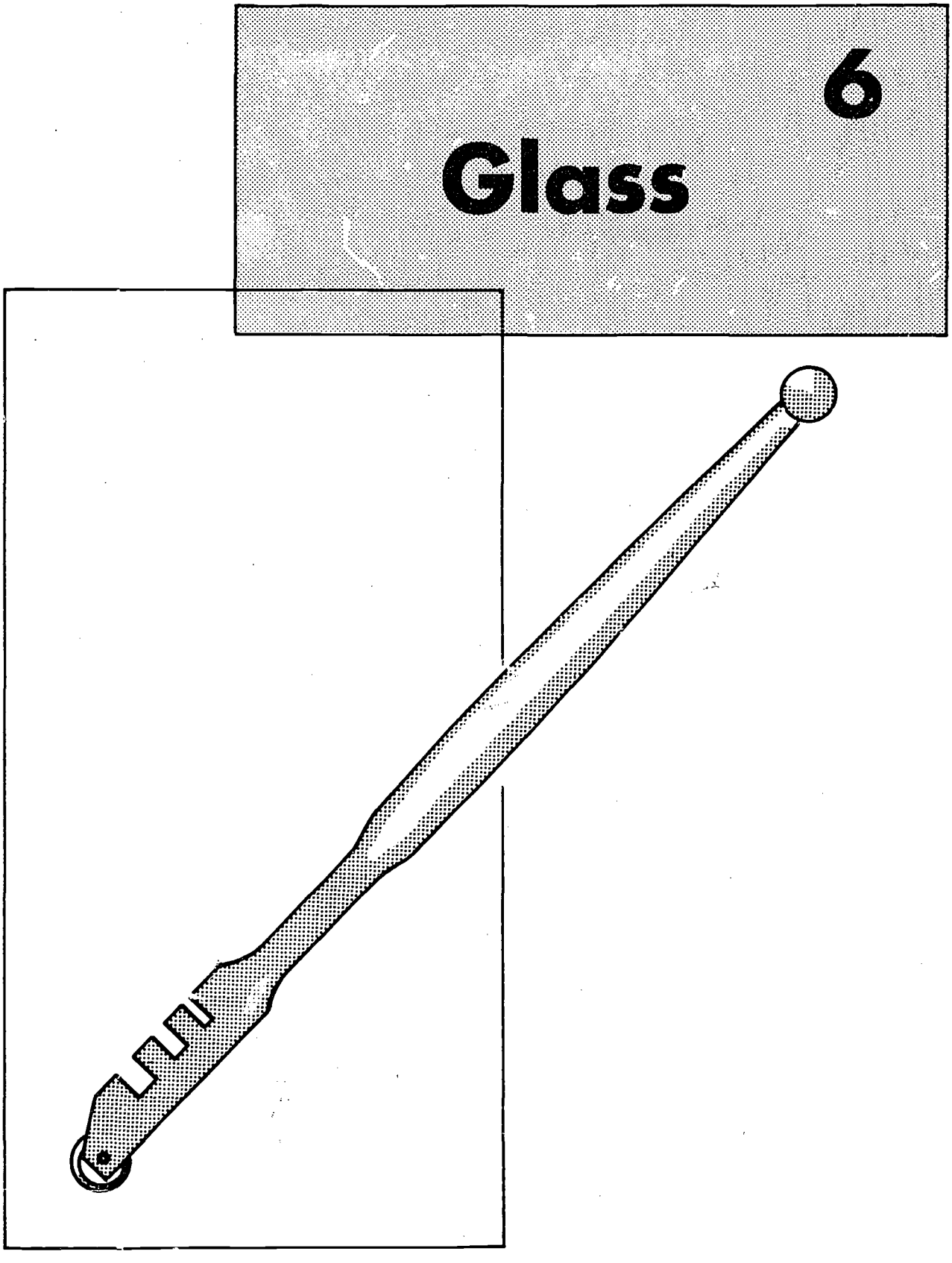

Approximately one fourth of the ceramic engineers in the United States work in the field of glass. They design bottles, jars, mirrors, window glass, lenses for cameras, microscopes, telescopes, and eye glasses, laboratory equipment, safety glass for automobiles, cooking utensils (pyrex), lamps, vases, TV tubes, and dishes.

This chapter deals with cutting, polishing, drilling, decorating, heating, casting, tempering, and forming glass shapes. The industrial techniques used in the glass industry are stressed. Consumer values, such as cutting a piece of glass for replacement in a window, are developed with students as they learn to cut glass accurately and safely.

Pupils learn the basic operations and processes involved in the fabrication of glass products. The projects have been selected to help students utilize glass working tools and equipment as part of their learning experiences.

GLASS PROCESSES

DEMONSTRATIONS AND OPERATIONS

Cutting glass
Decorating glass
Making a mold for glass sagging
Sagging glass
Fusing glass
Tempering glass
Grinding and polishing glass edge
Drilling holes
Laminating glass

RELATED INFORMATION

Reasons for glass breakage
Types of molds used in glass industry
Mold making
Parting compounds
Types of glass—chemical composition
History of glass
The glass industry (guidance)

SUGGESTED PROJECTS

Candy dish
Bowl
Platters
Trays
Room divider panels

SAFETY

Cutting glass
Polishing glass
Tempering glass
Handling glass
Storing glass
Protecting eyes

REFERENCES

Kinney, Kay. *Glass Craft.*
More, Lillian. *Glass Bending and Decorating.* Pamphlet. Cerami-Craft, 3122 W. 25 St., Cleveland, Ohio 00409.
Olson, Delmar. *Industrial Arts for the General Shop.*

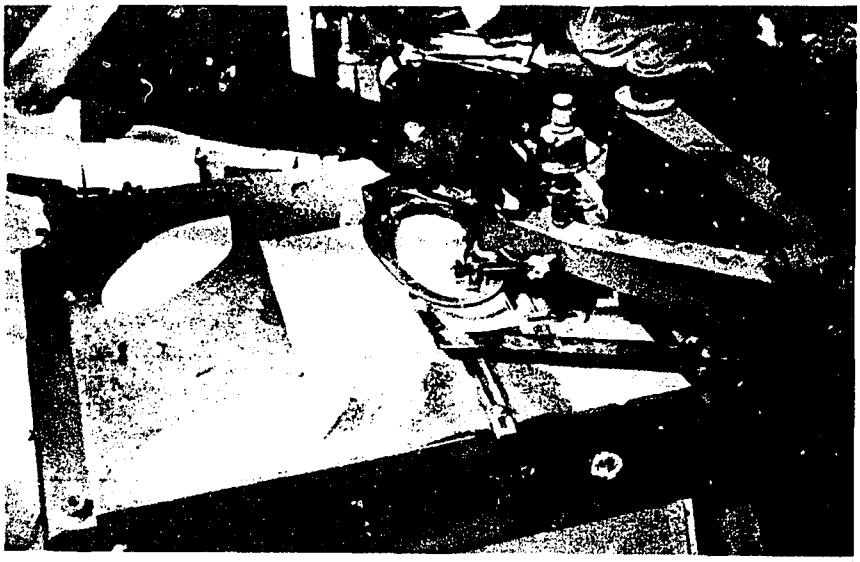

Mass production cutting of irregular glass shapes

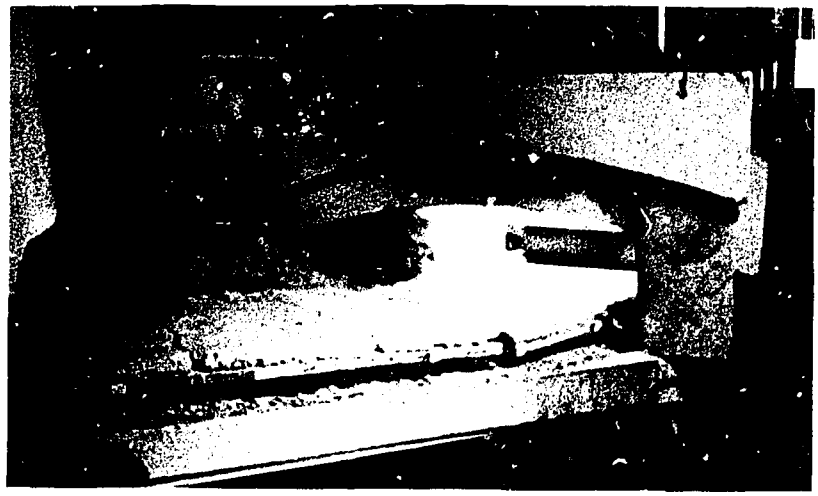

Glass dish on stainless steel mold emerging from tunnel kiln

Glass grinding and polishing

GLASS CANDY DISH — Project Plan

This glass sagging project will teach the student how to cut, handle, clean, polish, and decorate glass.

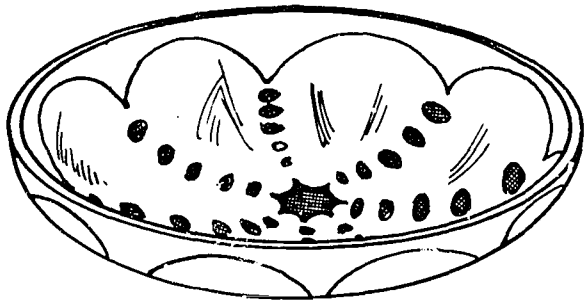

MATERIALS

Glass enamels
Metal enamels
Glass
Newspaper
Soap and water
Lint-free cloth
Alcohol
Sheet cork
Kerosene and oils
Circle cutter
Wet sanding belts (Nos. 80, 280, 320)
Pumice
Enamel gum
Kiln wash
Mold
Brush

TOOLS AND EQUIPMENT

Glass cutter
Still square
Glass pliers
100-mesh screws
Wet belt sander
Kiln
Kiln furniture

PROCEDURES

A. Cutting a Rectangular Dish

1. Clean glass thoroughly with soap and water.
2. Place between two pieces of newspaper to dry.
3. When glass is dry, wipe it with a lint-free cloth soaked in alcohol.
4. Place glass on padding (sheet cork, ½″ of newspaper, carpeting, felt).
5. Lubricate glass cutter. (Use a mixture of kerosene and oil.)
6. Hold glass cutter in a vertical position. Then score line with a continuous, firm stroke. Use a steel square as a guide. Do not go back and forth with the cutter.

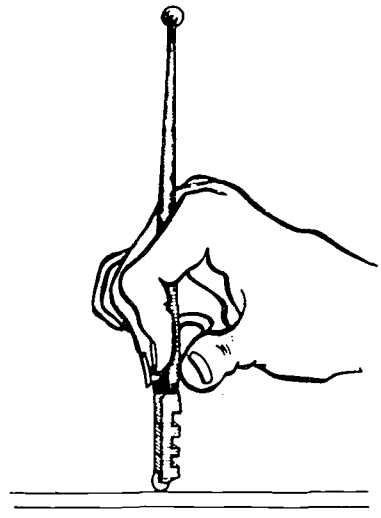

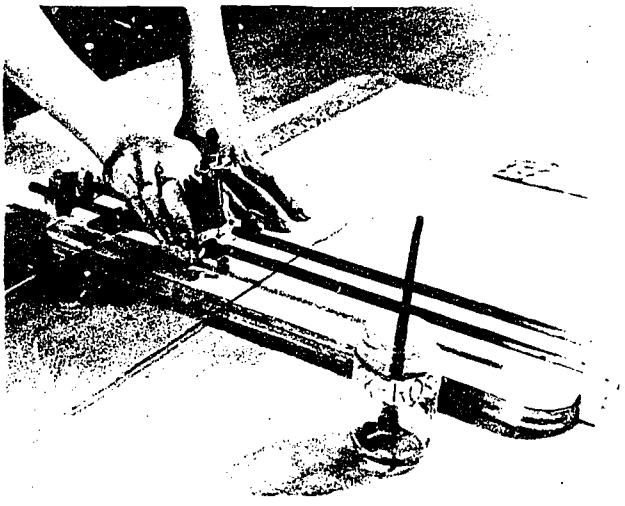

Cutting glass on glass-cutting table jig

7. Hold glass pliers near line, on the waste edge, and apply pressure downward. If you do not have glass pliers, line up scored line with straight edge of table; have the waste portion hang over edge of table; apply pressure downward.

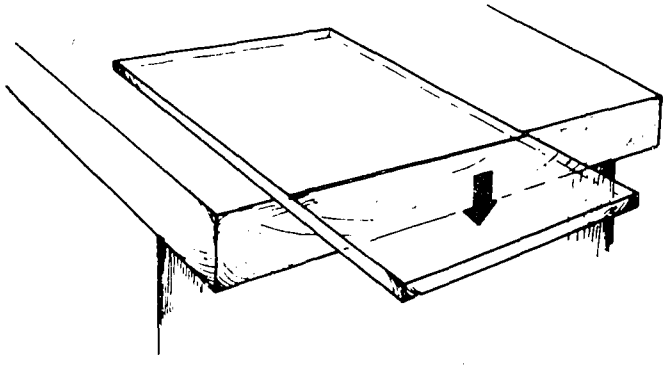

8. A third procedure utilizes a small nail with the head removed, placed beneath the glass directly under the score line. Pressure is applied to the glass on both sides of the score line and the glass breaks cleanly.

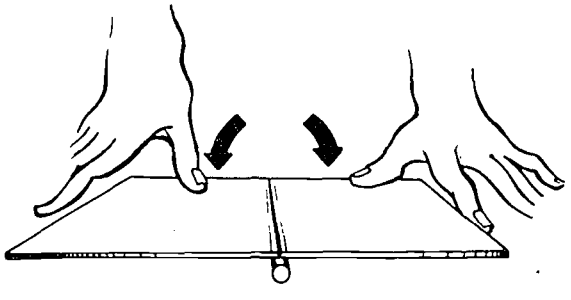

Note: Be careful of ragged edges. These can be stoned or smoothed with wet and dry sandpaper.

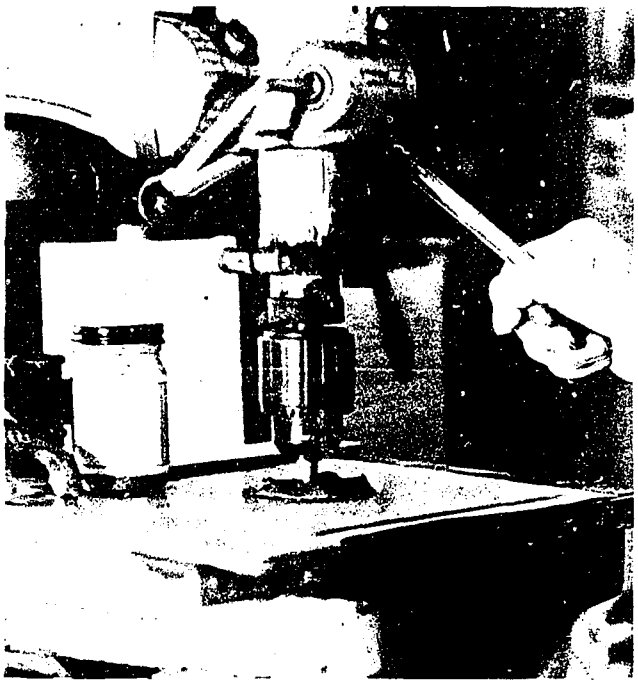

Drilling holes in glass on a drill press, using tube cutter, carborundum powder, and water

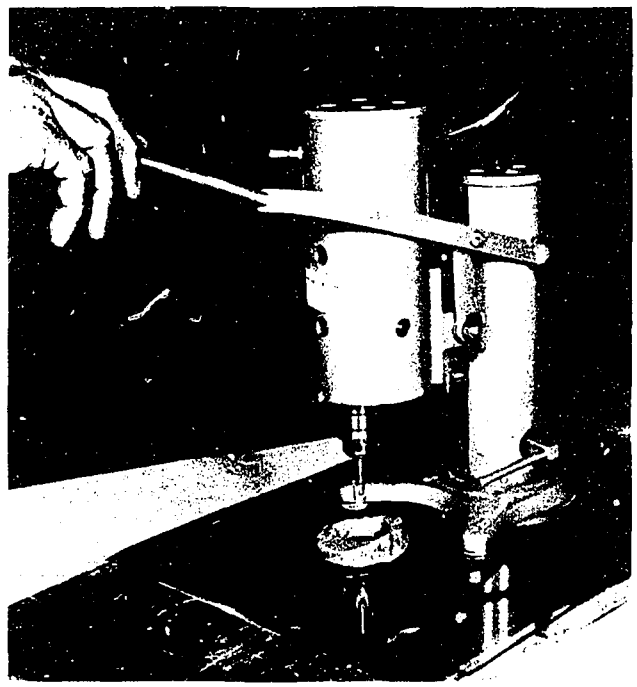

Drilling holes in glass on a portable drill press, using a carbide spear-point bit and kerosene

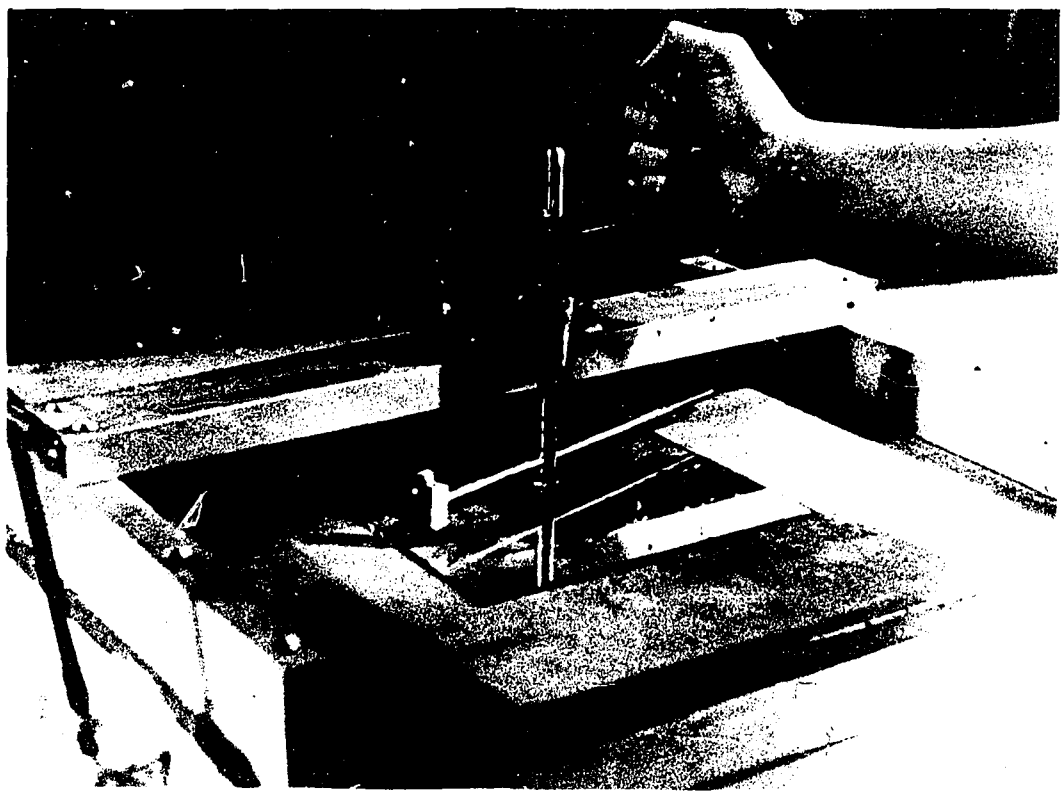

Cutting glass circles on circle jig

B. Cutting a Circular Dish

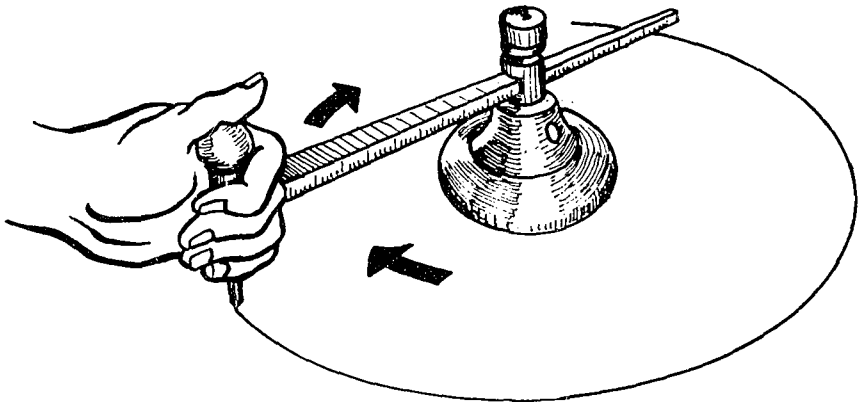

1. Adjust circle glass cutter to desired diameter.
2. Secure suction cup.
3. Brush kerosene on line area to be cut.
4. Use thumb for additional pressure on outside of rod.
5. Score line.

Making radiating cuts from circumference of scored circle to edge of blank

Tapping scored area to free glass shape

6. Use a straight glass cutter to make radiating cuts from circumference of circle to edge of glass blank.
7. Turn the glass over, and tap the scored area with the ball end of the cutter to free the glass shape.

Note: If a free-form shape is desired, use ¼″ tempered masonite as a template on the glass. This will serve as a bearing surface for the side of the glass cutter. Follow steps 6 and 7 to free the shaped glass.

8. Smooth all edges of glass and bevel slightly. A belt sander may be used. First use No. 80, then No. 280, finally No. 320 wet paper when smoothing by hand.
9. Final polish may be obtained with wet pumice on a belt that has been reversed to the smooth side.

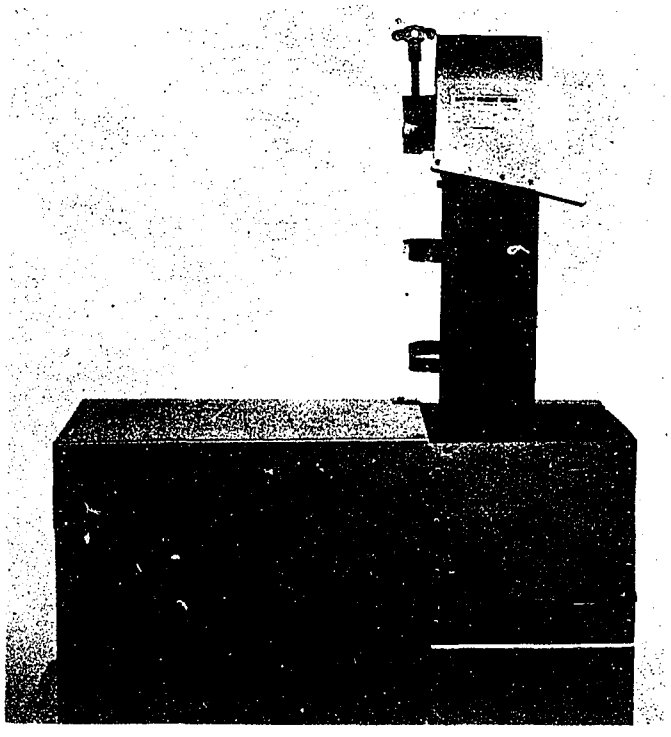

Wet belt glass grinder

C. Decorating

Note: Industry principally uses silk-screen printing as a method of decorating glass. Refer to Direct Silk-Screen Printing for the procedure to be followed with glass inks.

The following technique is suggested when enamels are used for decoration. Use glass enamels for window glass, although metal enamels may be used if they are cut 50% with glass enamels. Copper enamels, threads, lumps, beads, and metallic wires may also be used when laminating pieces of glass.

1. Clean glass thoroughly; then dry it. Avoid marking it with fingerprints.
2. Apply decoration to surface of glass (underglaze, overglaze, glaze, enamels, etc.).
3. Gum tragacanth or any enamel gum may be used as a binder to hold the enamels to the glass.
4. Sift the enamels onto the glass using a 100-mesh screen.
5. In lamination, a second piece of glass is required. It should be cut 1/16″ larger than the first blank. It may be placed on top of the first piece or can be decorated and then placed in position.

D. Sagging

1. Sift or spray kiln wash on inside surfaces of mold. (Whiting, plaster, flint, or fine clay may also be used.)
2. Place glass carefully in center of mold.
3. Place mold in center of kiln. Allow a minimum of 2″ between shelves.
4. Turn kiln on, leaving door slightly open. (Laminated glass must be heated slowly. The suggested heating time is 2 hours for 2 thin sheets, 2 to 4 hours for thicker sheets.)
5. At 1000°F., shut door.
6. When glass reaches sagging temperature, 1250F. to 1450F. (cone 018 to 014), depending on the glass being used, shut off kiln. Glass should be checked visually. When it slumps into mold and the edges have rounded, the firing is completed. Door should remain shut until glass is cool.
7. Remove glass when it has cooled to room temperature and wash with water to remove kiln wash.
8. Remove loose kiln wash on the mold by means of a brush.
9. Rough area on glass dish may be sanded and then polished.

MOLDMAKING

Clay (Grogged)

MATERIALS

Modeling tool
¾″ guide sticks
Rolling pin
Potter's knife
Spoon

Sandpaper
Grogged clay
Plaster
Tissue paper

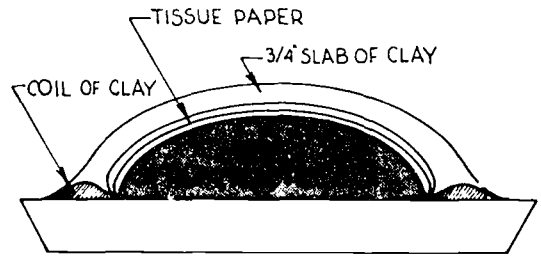

PROCEDURES

1. Make model (clay, plaster, lead, etc.).
2. Cover model with tissue paper.
3. Moisten paper.
4. Place inverted model on a wet plaster bat.
5. Roll a thick coil of grogged clay (1″), surround the model with the coil, and flatten against the model and the plaster bat to hold tissue securely.
6. Roll out a slab of grogged clay ¾″ thick.
7. Drape the clay over the model, and join to the flattened coil.
8. When the clay is slightly hard, remove model and weld inside joints.
9. Smooth mold by burnishing with spoon.
10. Drill several 1/16″ holes through the base of the mold.
11. Allow model to become bone-dry slowly.
12. Bisque-fire mold upside-down to cone 04.

Kastolite

MATERIALS

Clay size
Cottle
Kastolite (available from
Metropolitan Refractories Corp.,
1 Jacobus Avenue,
South Kearney, N.J. 07032)

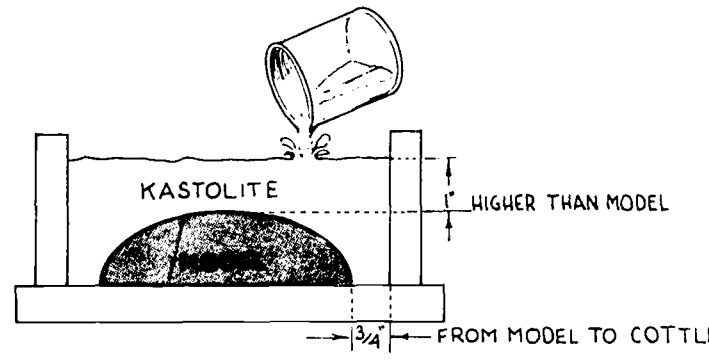

PROCEDURES

1. Make model. (Clay, wood, glass, plaster, metal, etc.)
2. Size model. (On oil, soap, and plaster use hot paraffin.)
3. Prepare cottle. (Height should be 1″ higher than model and provide a space ¾″ from the model.)
4. Mix Kastolite. (See directions on box.)
5. Pour over model and allow to set for 24 hours.
6. Remove model.
7. Fire mold to 1500°F.

Asbestos

MATERIALS

Clay
Tissue paper
Powdered asbestos
Water
Lacquer
Kiln wash

Mixing container
Hand drill
1/16″ twist bit
Countersink
Brush

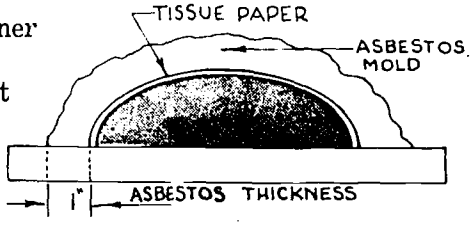

PROCEDURES

1. Make model.
2. Cover form with tissue paper.
3. Mix powdered asbestos with hot water.
4. Knead to a doughlike consistency.
5. Apply 1″ thick layer over model.
6. Allow to dry slowly on mold.
7. Spray outside with lacquer.
8. Allow to dry.
9. Remove model.
10. Drill several 1/16″ holes in the bottom and countersink on base side.
11. Coat with kiln wash.
12. Fire to 1300°F.

Fire Brick

Fire brick can be easily obtained and is an excellent material to use in glass sagging. The material of which it is composed will withstand the kiln temperature, and it can be used time after time.

MATERIALS

Fire brick K-20 or K-28
Sodium silicate
Water
Whiting
1/16″ diameter twist drill

Hand drill
Gauge
Router plane
Knife
Spoon

Pencil
Needle
Brace
Countersink
Brush

PROCEDURES

1. Lay out design on fire brick. (Allow at least ½″ border.)
2. Score lines at desired angle with a straight blade.

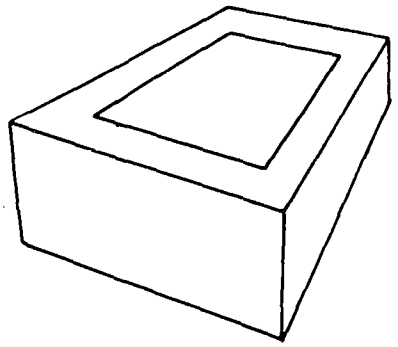

3. Scoop out material with a spoon, knife, or gouge (a router plane set to the correct depth may be used for the inside base.)
4. Drill several holes in the bottom and countersink on the base side. (These serve as vents for the escape of air.)
5. Soak brick in a solution of 1 pint sodium silicate to 3½ pints of water for 10 minutes.
6. Allow brick to dry.
7. Make a paste of whiting and water, and rub inside surfaces.
8. Fill in vents with paste, then pierce with a needle.
9. Fire to 1300°F.

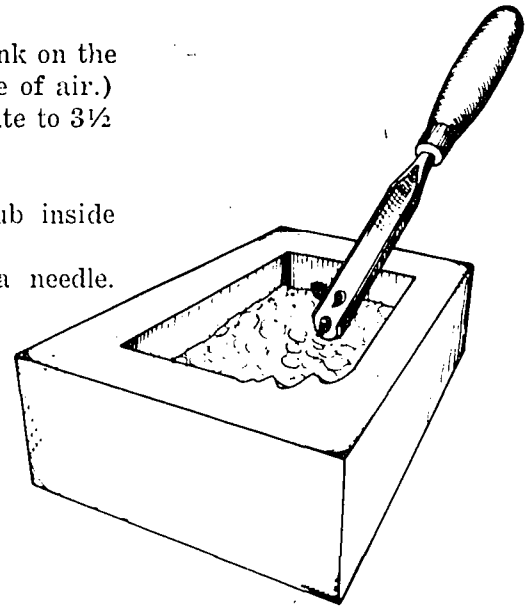

ALTERNATE METHOD OF CUTTING BRICK

1. Saw brick in half lengthwise.

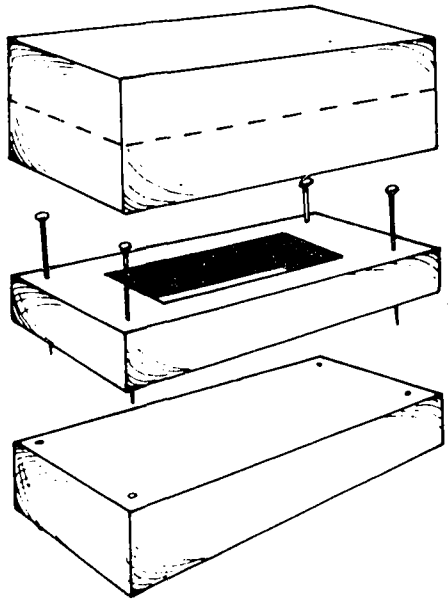

2. Lay out design on top half and cut through the entire section.
3. Smooth all surfaces.
4. Reassemble both halves of the brick with pins made of nichrome wire.

Stainless Steel

Many molds used in industry are fabricated from sheets of stainless steel. Such molds are durable and simple to construct.

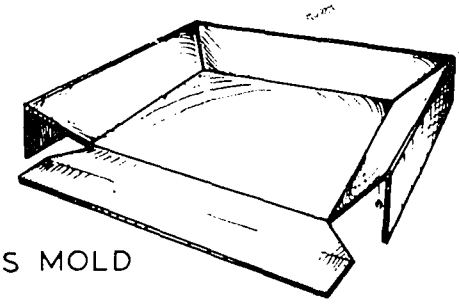

Layout of
STAINLESS STEEL GLASS MOLD

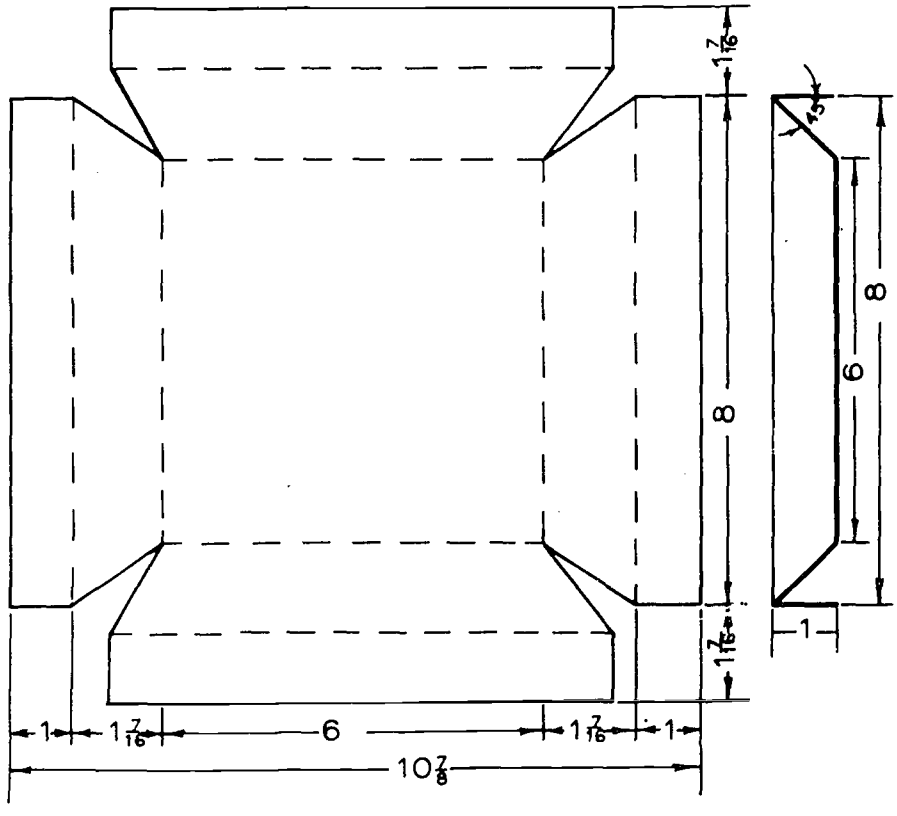

MATERIALS

24-gauge stainless steel
Tinner's snips
File
Pan brake
Kiln wash

PROCEDURES

1. Scribe layout on the stainless steel.
2. Cut to shape with tinner's snips.
3. Remove burrs with file.
4. Fold metal to shape by means of a pan brake. (In lieu of a pan brake a block of wood, stake, and mallet may be used.)
5. Preheat mold in kiln or with torch.
6. Spray mold with mixture of kiln wash and water. The heated mold will hasten the evaporation of the water and aid in the adherence of the kiln wash to the metal surface of the mold.
7. Place glass in center of mold and fire.
8. Wash mold and respray with kiln wash prior to each firing.

GLASS — Related Information Sheet

One of the oldest manufactured substances in the world is glass. Long before man learned the secrets of manufacturing glass, he knew how to fashion arrowheads and knives from glass produced by nature by means of lightning or volcanic action (e.g., obsidian).

The earliest example of man-made glass (glass-coated stone beads) dates back approximately 14,000 years and was found in Egypt. The first American industry was the manufacture of glass by the settlers of Jamestown in 1608. Their crude methods are quite different from techniques used today which utilize elaborate automatic machines. Some of these machines are capable of producing bottles at a rate of 250 per minute.

Most glass is made from the following raw materials: silica sand, limestone, and soda ash. Crushed glass, commonly known as cullet, is added to the raw materials to make them more workable. Small quantities of other materials frequently are added to impart specific qualities. For example, lead compounds aid in producing a brighter glass; borax makes a glass that resists sudden changes in temperature; alumina produces a glass of greater strength; other chemicals add color.

These ingredients are accurately weighed, mixed, and finally deposited in large furnaces where they are heated and melted. These furnaces run continuously, day and night. As the batch melts, it filters to the bottom of the tank, leaving the impurities at the top. The molten glass then is collected in a second tank where it is ready to be formed by any one of several processes.

Sheet glass is manufactured by drawing the molten glass between steel rollers which are water cooled. A conveyor will carry this sheet of glass and control the thickness by means of the speed at which the conveyor moves. The conveyor then carries the glass to a lehr, a long, tunnel-shaped oven, where the glass is reheated, and then gradually cooled as it travels through this long oven. This annealing process relieves internal strain within the newly formed glass, thus preventing it from becoming brittle and shattering quite readily.

Tubing and glass rods are formed by extruding the molten glass through dies of the same shape as the finished product. A jet of air blown into the molten glass forms the hole in the tubing.

Lenses for automobile lights, ashtrays and dishes are formed by means of pressing. This involves placing a gob of molten glass into a metal mold. A plunger then forces the glass to take the shape of the mold cavity.

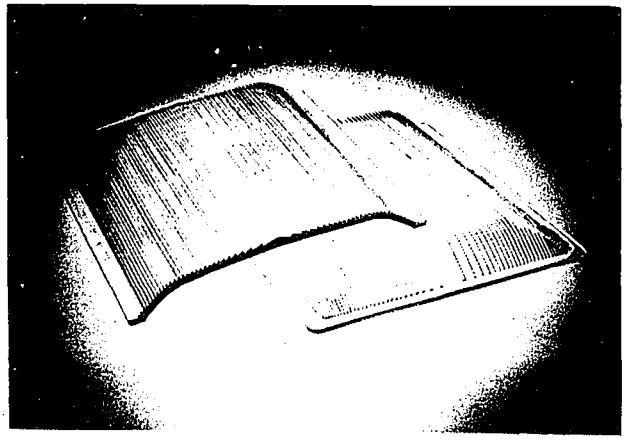

Automotive lens formed in metal mold

Billions of our bottles, drinking glasses, and light bulbs are shaped each year on automatic glass-blowing machines. Each machine may have several molds into which the molten glass is blown. The first mold will press the red-hot gob of glass to a rough shape known as a parison. This gob is then quickly and automatically transferred to another mold where compressed air will blow it into its final state. The time lapse from the cutting of the red-hot gob for the first mold to the emergence of a finished container may take about six seconds.

Regardless of the methods of manufacture used to shape the glass, all involve working with it while it is red-hot, and carefully cooling it in an annealing lehr.

Designer's sketch of glass jar

Hand finishing metal mold for glass jar

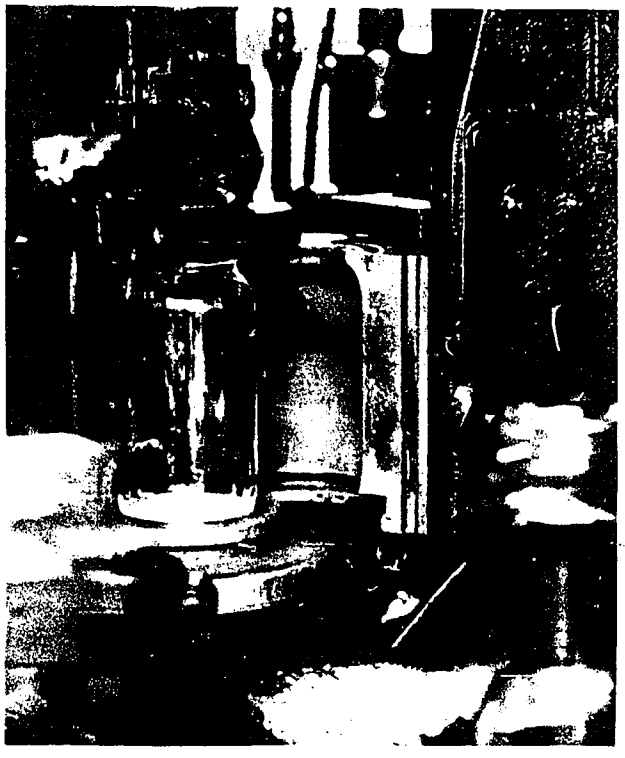

Glass jar emerging from mold

Parison dropped into mold prior to shaping by air

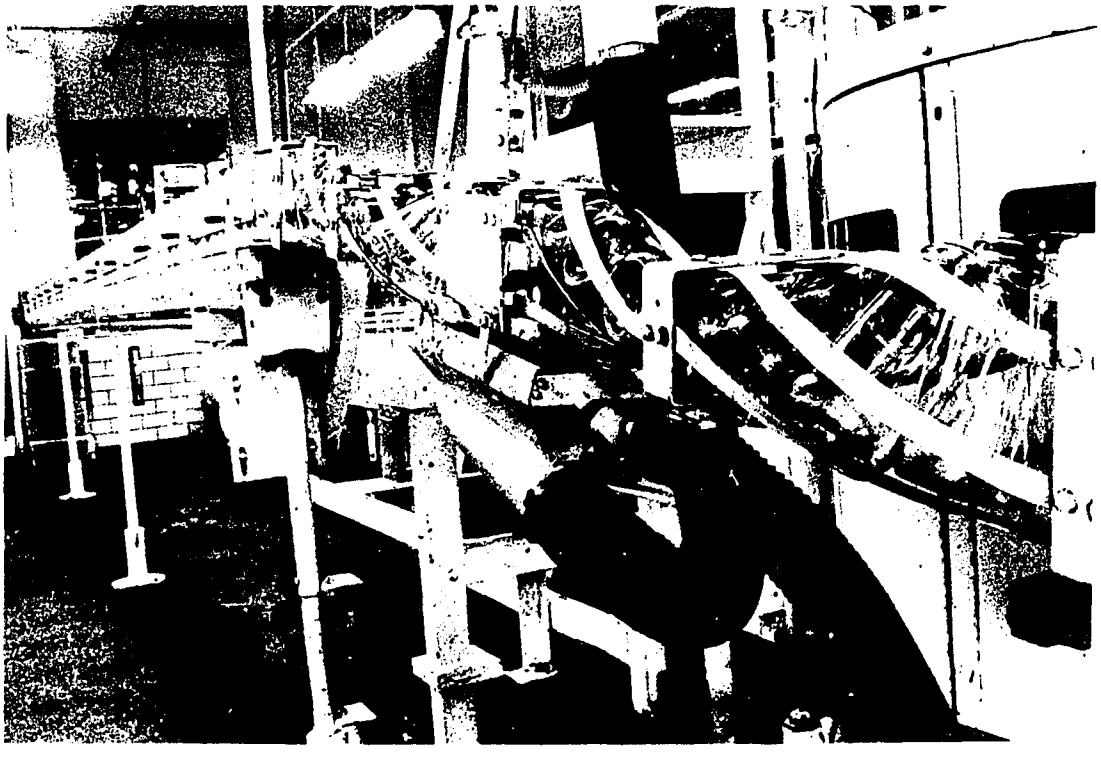

Completed jars leaving assembly line after annealing

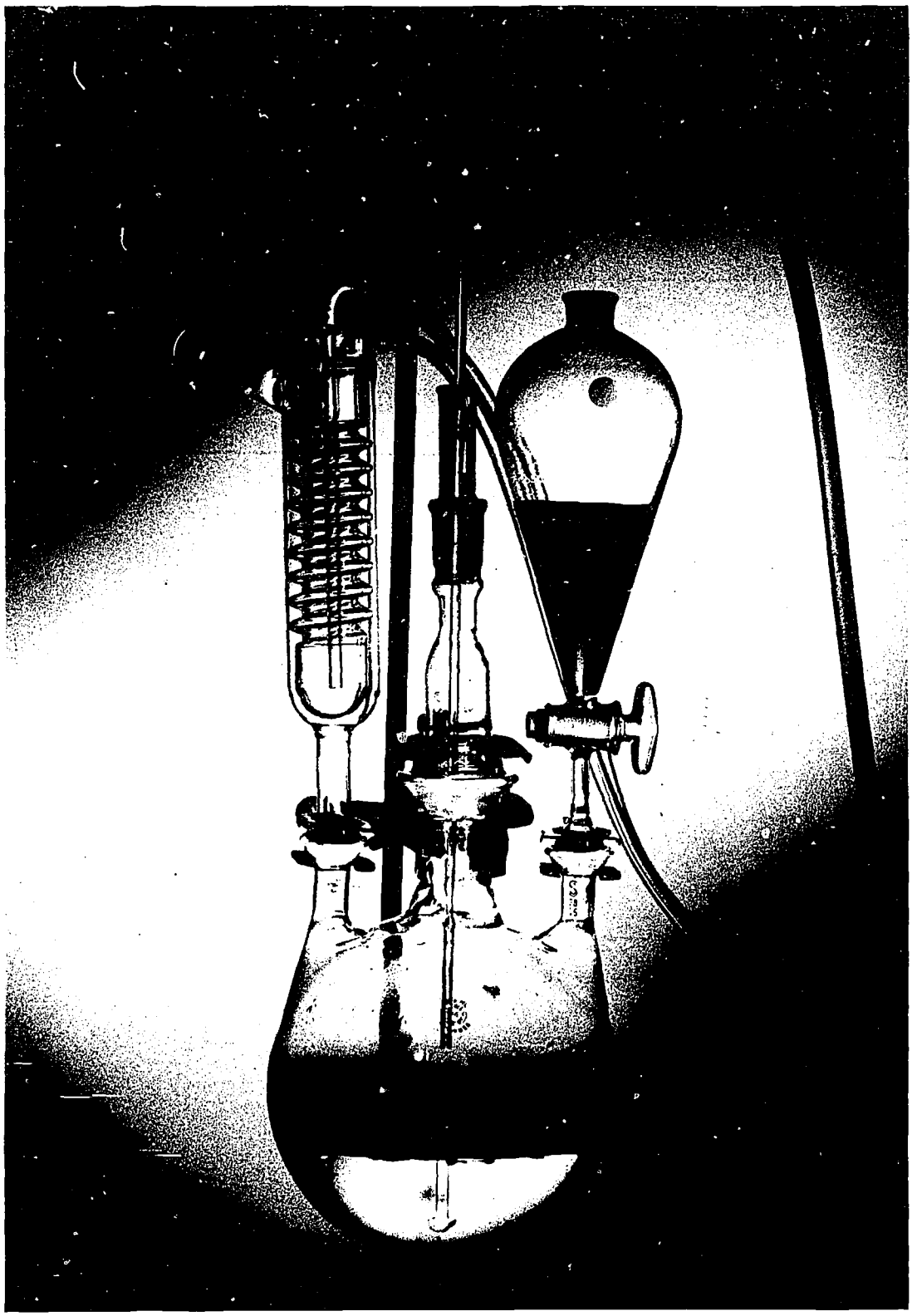

Chemical ware for laboratory use

7 Mass Production

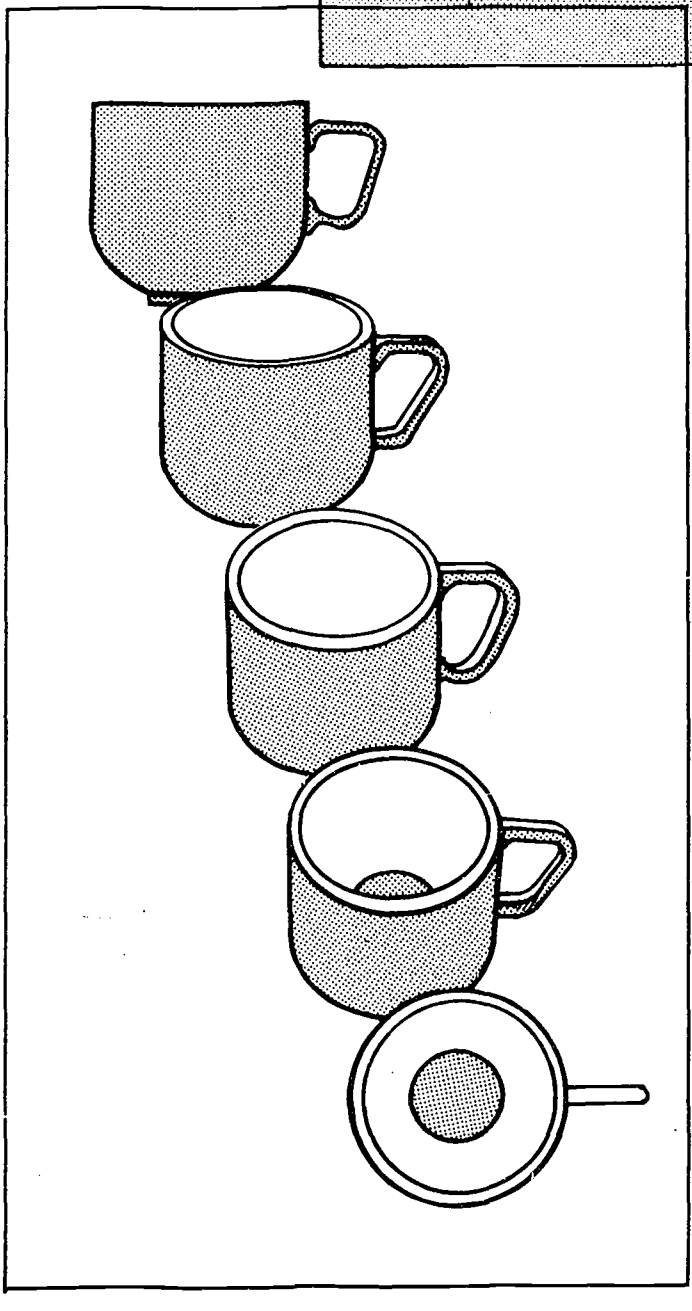

America's world leadership is founded upon the ability of its industries to outproduce those of other nations. This superior production capability is possible because of the development and utilization of mass production concepts in manufacturing.

From the age of the cave man to the present, ceramic products have contributed toward making man's life more tenable. It is important that the methods necessary to produce ceramic products in large volume be studied in detail. An understanding of volume or mass production helps to perpetuate and improve the systems by which greater numbers of people can benefit.

Materials of the construction industries, such as cement, concrete blocks, bricks, clay pipe, tile, fixtures, plaster, and wall board are prime examples of ceramic mass production products currently contributing to our affluence.

Prior to the initiation of a mass production unit in ceramics, it is suggested that the teacher refer to *Industrial Arts Metalworking for Secondary Schools, First Year,* Curriculum Bulletin No. 7, 1966-67 Series, pp. 163-170.

MASS PRODUCTION ACTIVITY

GLASS TRAY

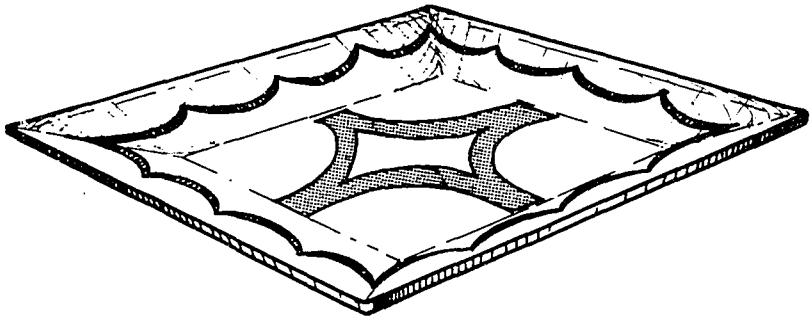

The following describes a suggested procedure which can be utilized for the mass production of a glass tray.

The glass tray illustrated here involves using a square, double-strength glass blank 4″ × 4″ with polished edges. The surface is decorated by direct silk-screen (photo stencil) printing, using glass colors in an appropriate medium. The finished shape is attained by sagging the glass blank in a stainless steel mold.

It is understood that motivational activities are undertaken by the teacher prior to the start of the unit. Discussions, films, industrial reports, field trips can be employed for effective motivation.

Activity should begin with a thorough class discussion of the proposed unit and the method to implement it. From the discussion an understanding of the four basic phases of mass production (planning, tooling, production and distribution) and the organization of groups necessary to successfully conduct such a unit should evolve. Three groups would be responsible for business, engineering, and production activities for each of the above phases. The duties and responsibilities of each group (or section) should be defined and recorded.

Phase I: PLANNING

1. Section Personnel Assignments: The teacher should control these assignments, making them on the basis of capabilities and proved performance. A job superintendent and an assistant should be chosen from the students displaying leadership qualities. These students are responsible for the activities of the entire unit. Three section foremen are required to head the basic working groups. Here again leadership qualities and aptitudes for the work to be performed are to be considered. The remaining students should be assigned to the business, engineering, and production sections according to capabilities. From this last group, assistant foremen will have to be designated and prepared to fill in as foremen when necessary. As the unit progresses, it may be necessary to shift personnel from section to section as the work load fluctuates.

2. Project Selection: The sections should collectively determine or be guided toward the selection of the basic design of the project to be mass produced.

3. Section Planning Activity: Each section should undertake the planning duties previously determined.

   Engineering section: Develop production procedures. Make pilot mold and model. Determine operational sequence.

   Business section: Prepare programs for safety, security, personnel management, accounting, production, and finance. Compile material, tool and equipment lists. Prepare advertising campaign. Plan distribution and selling procedures.

   Production section: The work of this section will be delayed until the completion of the pilot model. (Students may be engaged in completion of work of previous units.)

4. Project Analysis Conference: Upon completion of the pilot project or model, a joint section conference should be convened to analyze the project. Business, engineering, and production aspects are to be discussed by the group as a whole. Once delineation of areas of responsibilities have been made, each section should record and define its duties.

Phase II: TOOLING AND MATERIAL PREPARATION

With the responsibilities of each section redefined on the basis of the analysis of the pilot model, each group undertakes its respective tooling activities.

1. Business section

Acquire and distribute to engineering and production sections all materials, tools, and equipment required.

- Double-strength window glass (multiples of 4″ × 4″)
- Glass cutters
- Lumber for glass-cutting jig, glass-polishing jig, and drying racks
- Carborundum stones for dressing and polishing (belt sander where possible)
- Kerosene for cutting
- Water for dressing and polishing
- Acetate for design positive
- Ulano Hi-Fi green stencil film
- Ulano Hi-Fi developing kit
- Exposure equipment
- Developing trays
- Hot water
- Screen frame (with 12xx stretched silk)
- Blockout medium
- Silk-screen printing base
- Squeegee
- Glass colors
- Direct screen medium for glass colors
- Glass plate
- Palette knife
- Clean storage jar
- Spirit thinners
- Waste rags
- Newsprint
- 22/24 gauge stainless steel
- Tin plate (layout template)
- Kiln wash and binder
- Degreaser
- Cardboard or masonite (thickness to equal glass)

Prepare instruction sheets on these topics for work stations.

- Glass-cutting (use of glass-cutting jig)
- Glass-polishing (use of edge-dressing jig)
- Drying (use of drying and storage racks)
- Screen-printing (procedure)
- Preparation of screen-printing ink
- Preparation of stainless steel sagging molds

Prepare materials for advertising campaign.

2. Engineering section

Prepare flow chart.
Design jigs, racks, sagging molds, and register masks.
Prepare working drawings.
Inspect preparation of work stations; inspect jigs, fixtures, and molds.

3. Production section

Make jigs, racks, register mask, photo stencil, and adhere photo stencil to screen.
Assemble screen printing unit; screen, mask and base.
Prepare glass printing ink.
Test fire ink.
Make test impression.
Make steel mold template.
Make stainless steel molds.
Prepare sagging molds. (Degrease and apply kiln wash.)
Prepare work stations as indicated by production flow chart.

- Glass cutting
- Glass polishing
- Washing and drying
- Screen printing
- Mold preparation
- Firing
- Mold recovery
- Final inspection
- Packaging

Train work station personnel.
Run trial of production line.

PHASE III: PRODUCTION

The production run may extend over varied periods of time, depending upon the volume of projects desired.

1. Production section: The activity of this section will dominate this phase of the unit. Trained personnel for work stations are to be assigned prior to the daily run by the section foreman. The production run is to be supervised by the foreman and his assistant. Work stations are to be fully stocked with materials at the beginning of each run.
2. Engineering section: Personnel of this department should be responsible for inspection duties at the final inspection station.
3. Business section: Personnel in this section should keep time records of production line personnel, provide and account for raw materials, collect and record production data at each work station, maintain production charts, and conduct time and motion studies.

Phase IV: DISTRIBUTION

The business section will supervise the final phase of the unit: the distribution of the finished products. In many cases the eventual distribution of the product may have been decided during the original planning phase.

If the product was produced for a charitable institution such as the Red Cross, the business section must arrange for packaging, labeling, and shipping with the receiving agent of the institution. All communications, by phone or correspondence, are the responsibility of the section personnel.

If the product is to be sold in the G.O. school store, the business section is responsible for all necessary aspects of this mode of distribution. Financial accounting of the entire unit is an important duty of the section.

The financial or economic aspects of mass production activity are illustrated by working out an arrangement with the G.O. store. A situation can be worked out in which students may receive wages for their labor in the unit. Such wages, issued in the form of script, are redeemable in the G.O. store. The script in turn is compensated for from the monies derived from the sale of the mass produced items.

During the distribution phase the engineering and production sections are employed to break down the production line, store jigs, fixtures, racks, tools, and molds. All reusable materials are to be recovered and a general cleanup undertaken to close out the unit.

EVALUATION

The culmination of the mass production unit should take the form of a class discussion. The criteria, procedures, and accomplishments should be evaluated and compared to bring out the inherent values of mass production practices in American industry.

GLASS TRAY - FLOW CHART

Sagged form with silk screened surface decoration

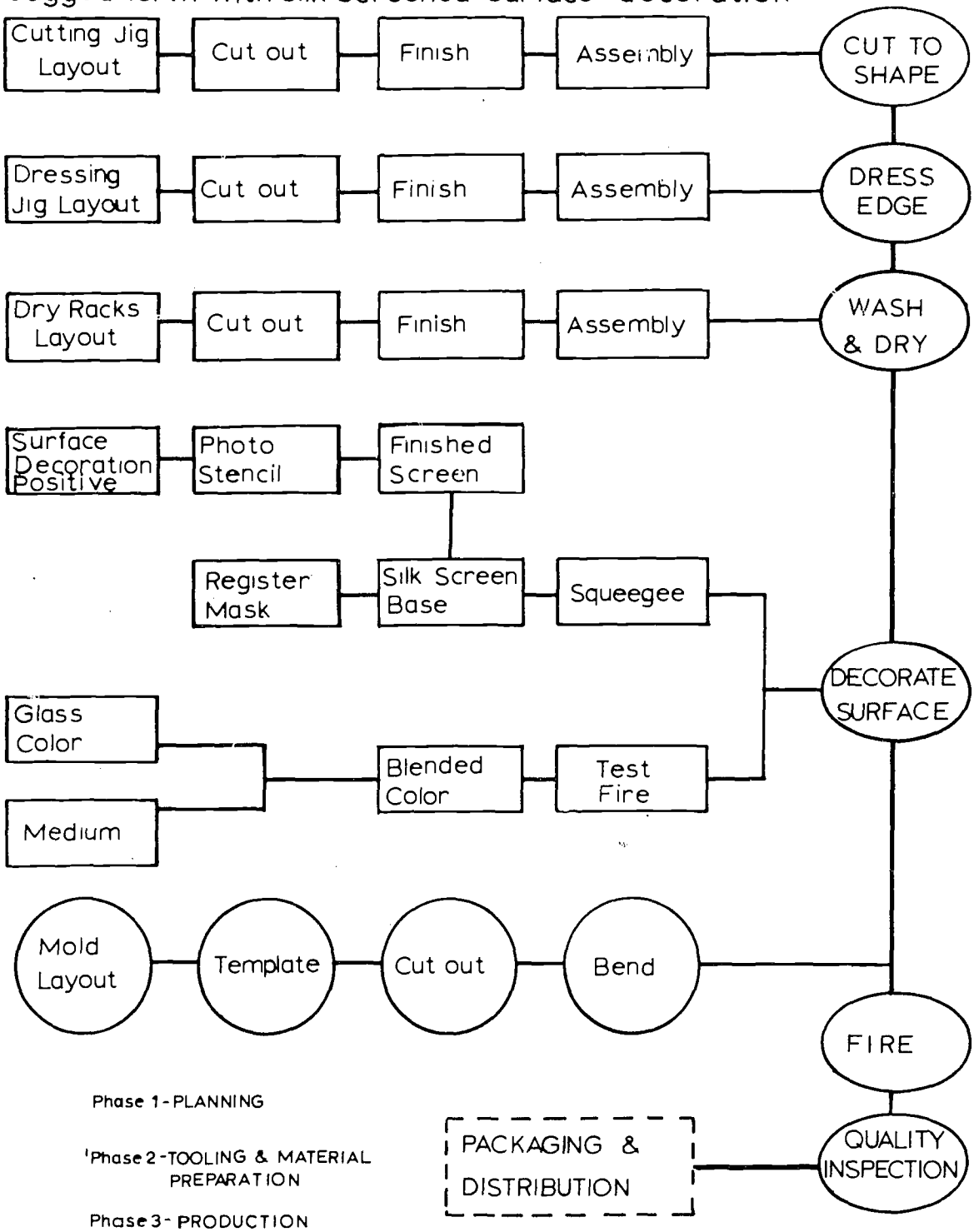

Phase 1 - PLANNING

Phase 2 - TOOLING & MATERIAL PREPARATION

Phase 3 - PRODUCTION

Phase 4 - DISTRIBUTION

GLASS CUTTING JIG

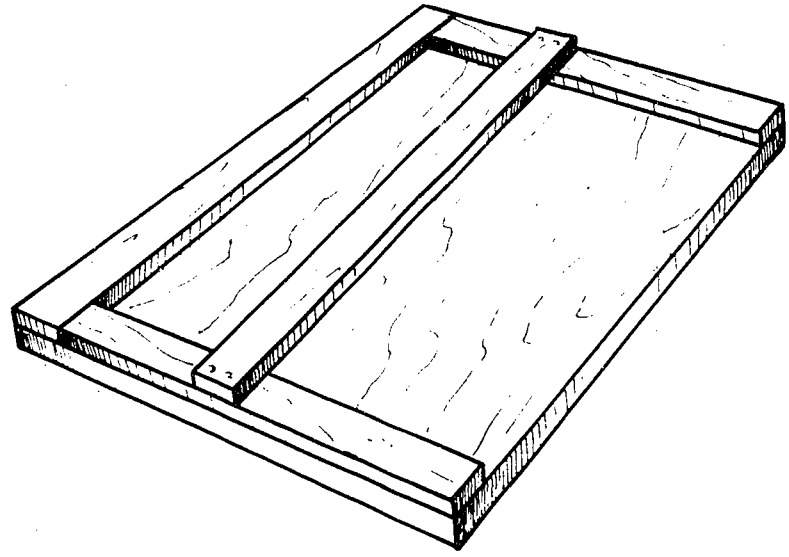

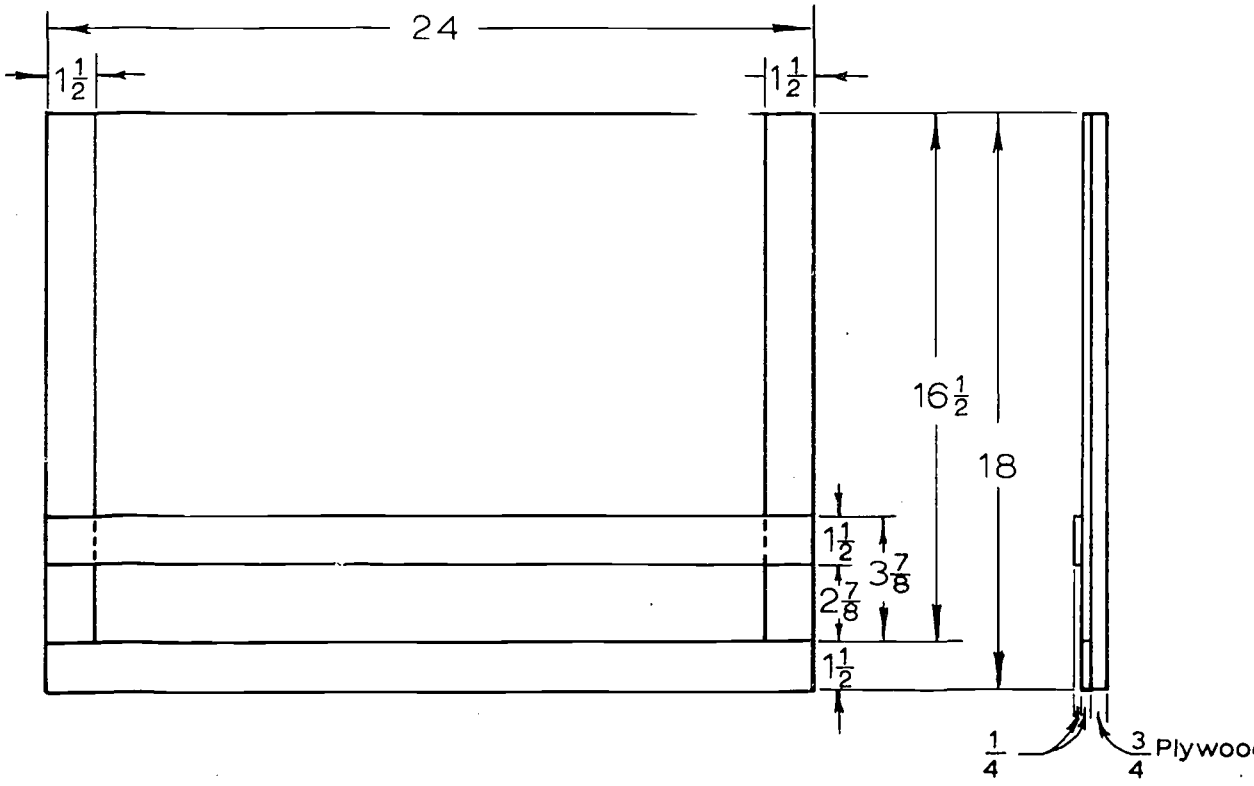

GLASS EDGE POLISHING JIG

Rub oilstone back and forth to polish glass edges.

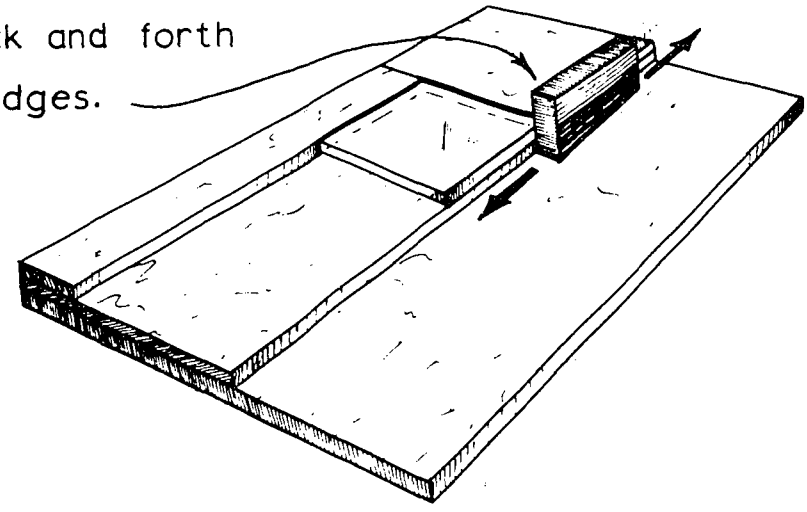

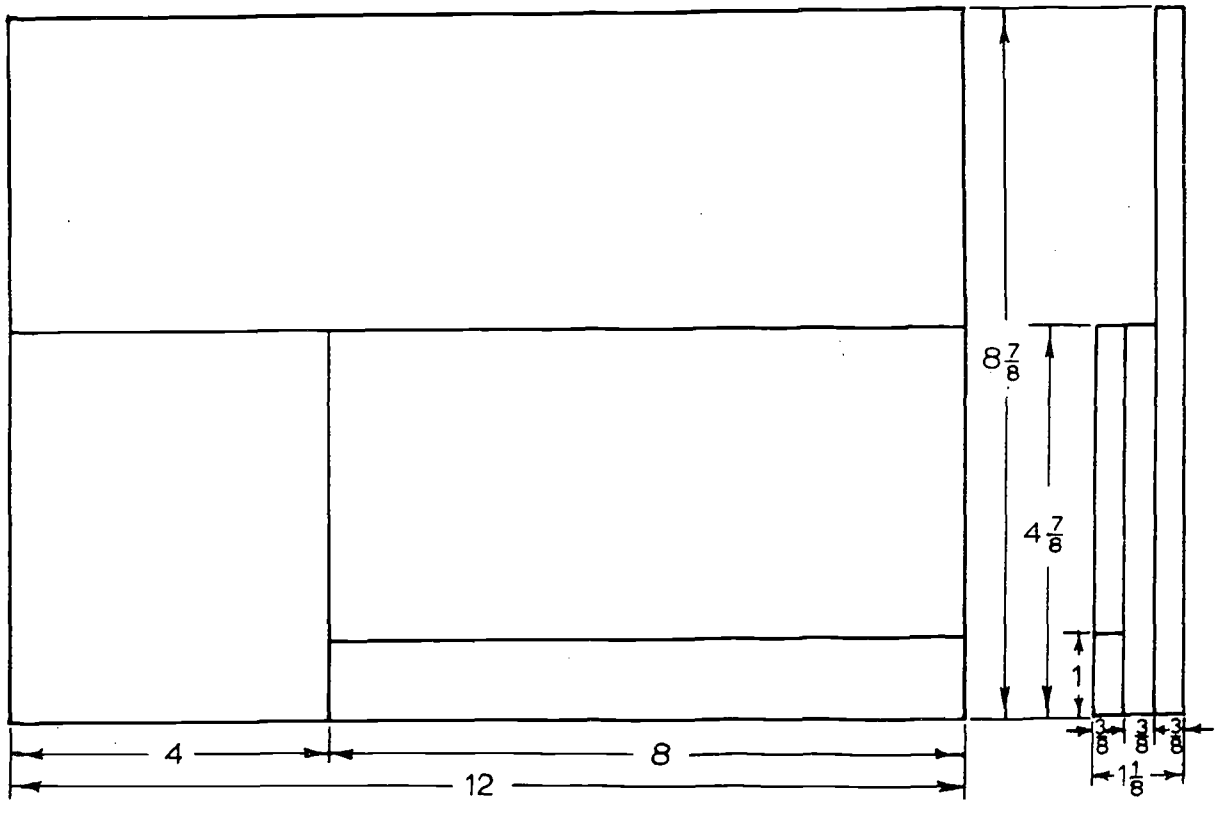

GLASS DRYING AND STORAGE RACK

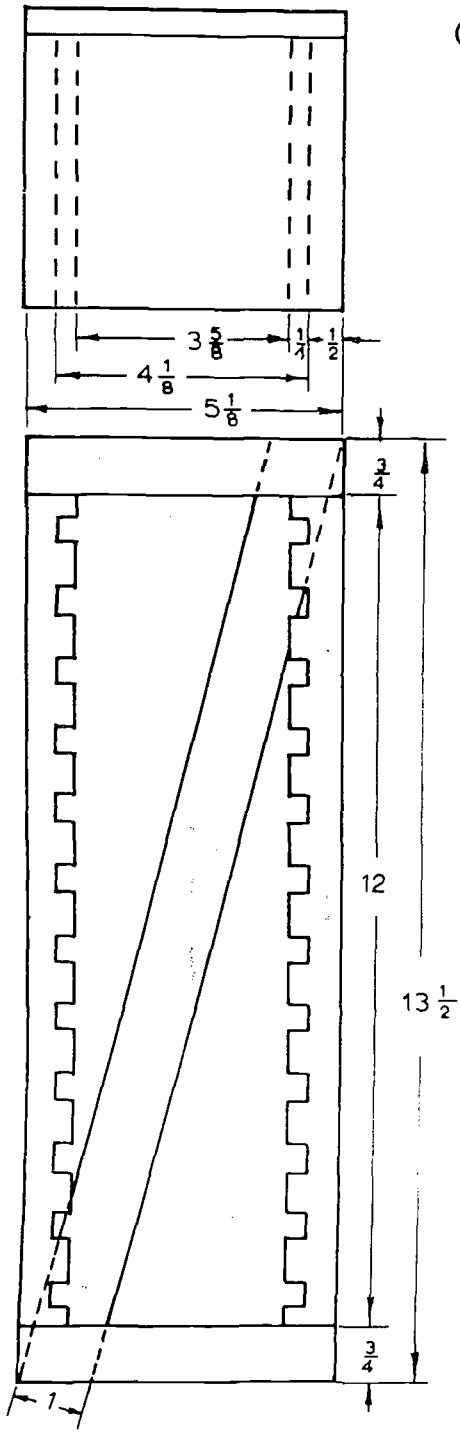

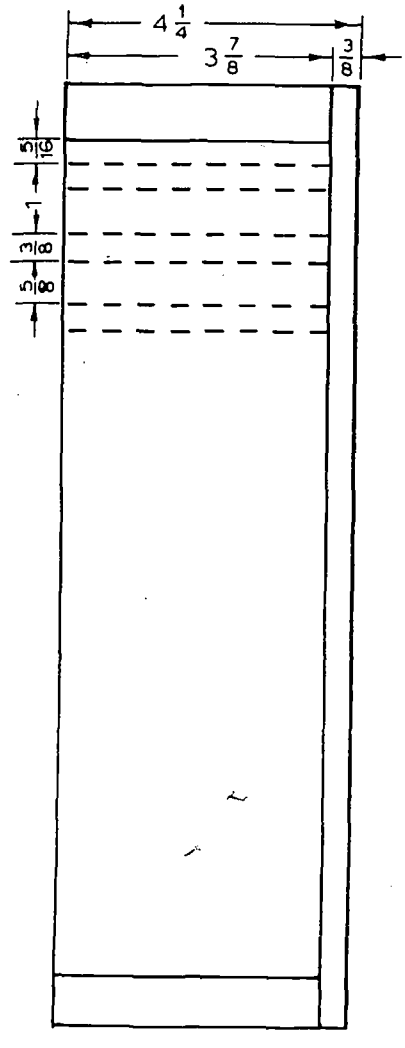

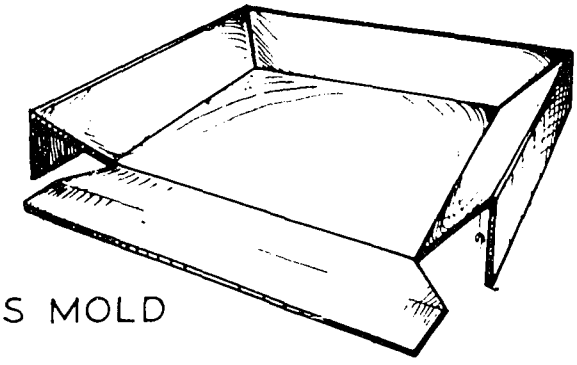

Layout of
STAINLESS STEEL GLASS MOLD

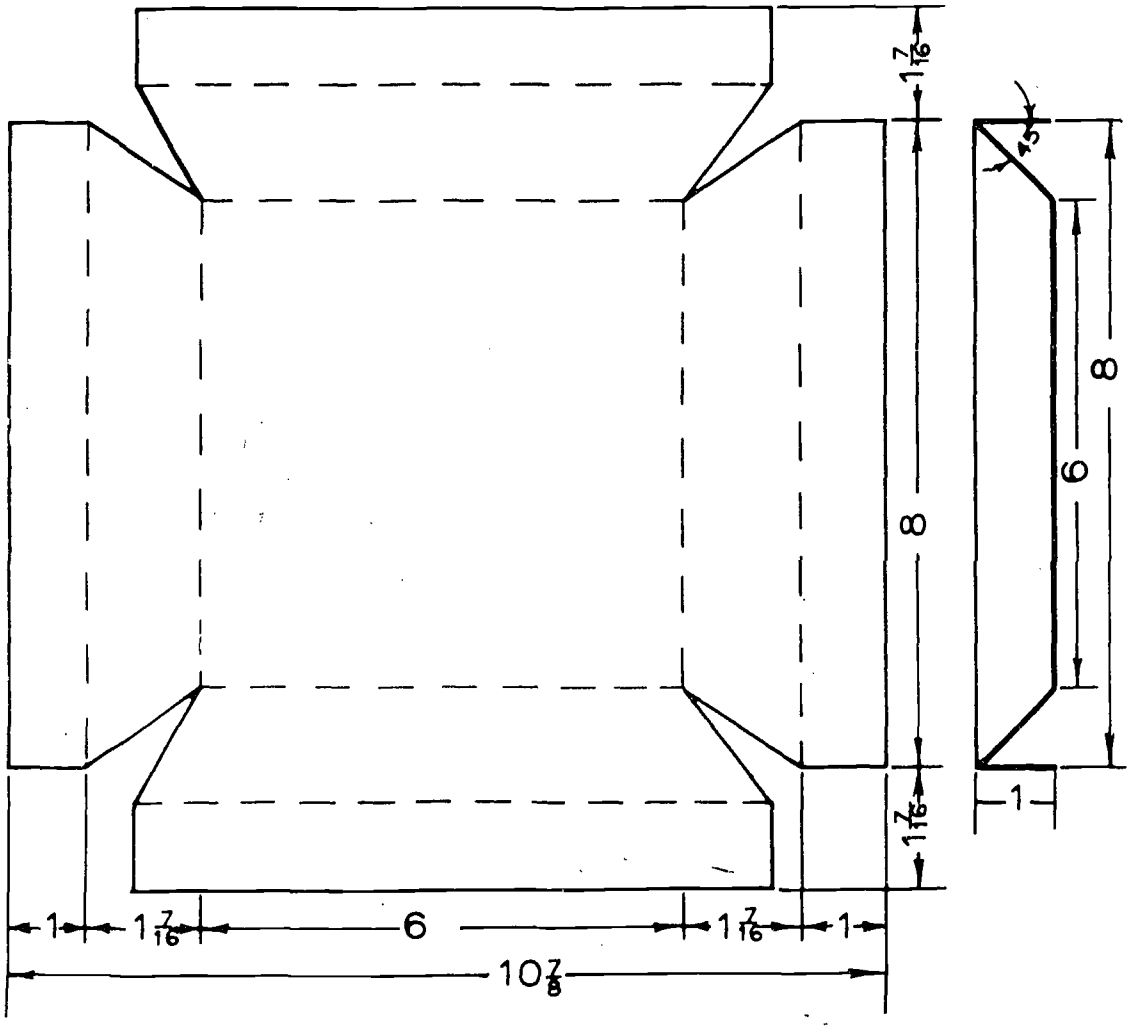

REGISTER MASK

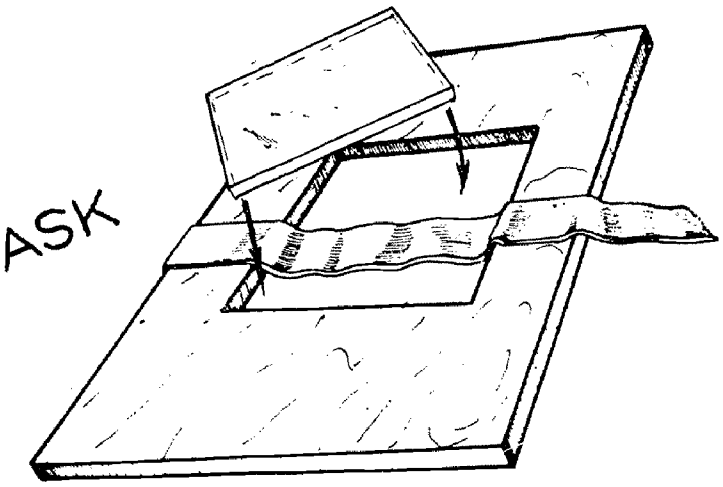

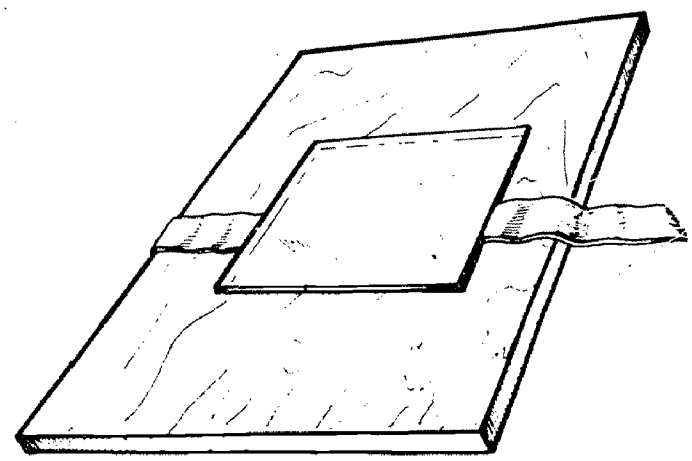

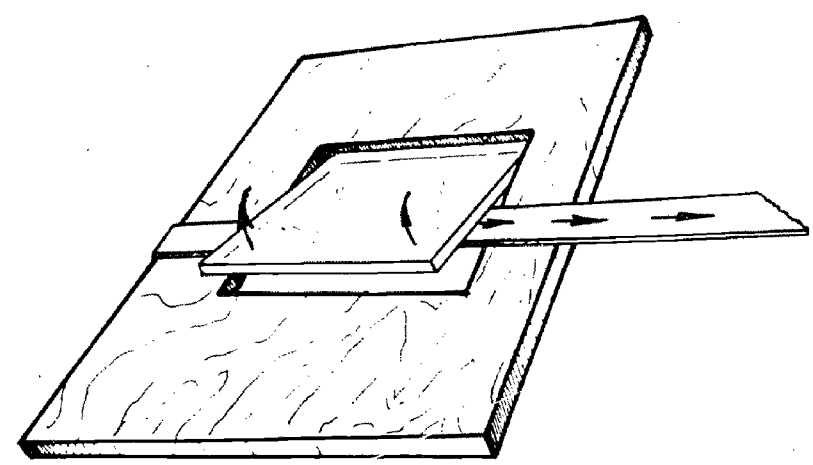

8

Guidance

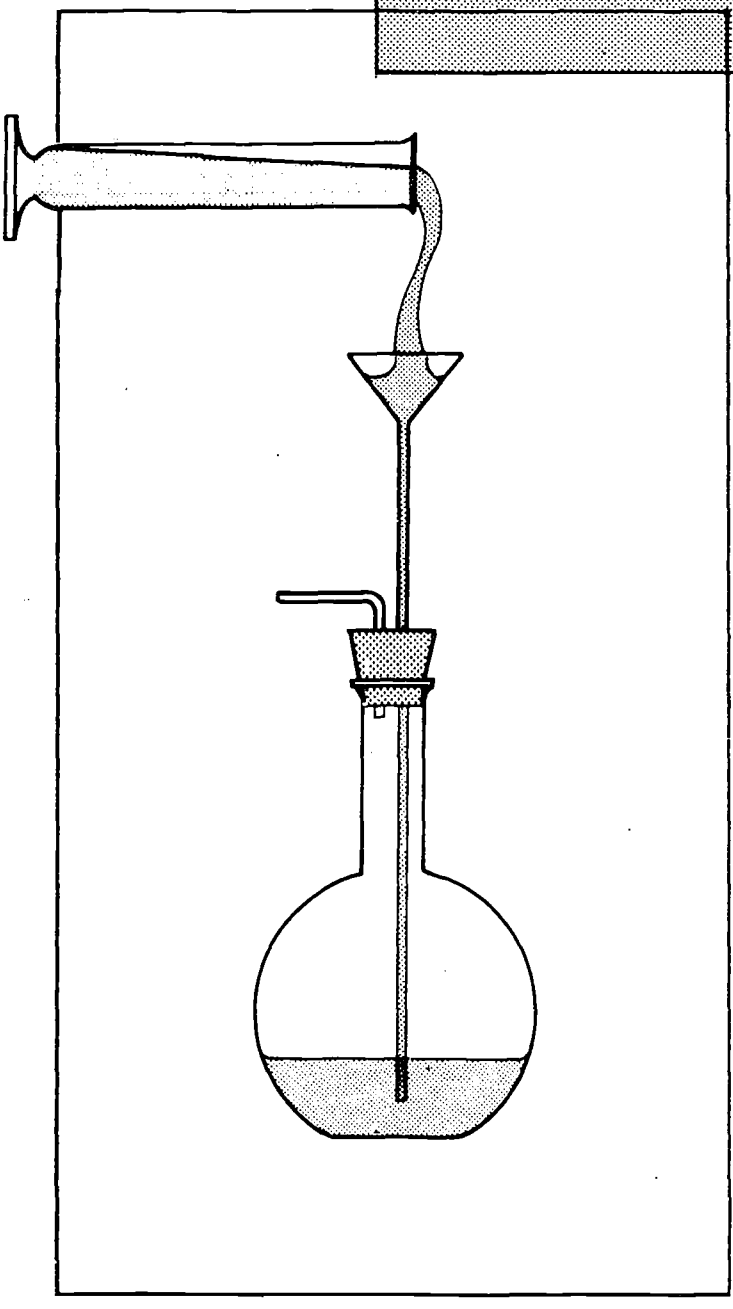

The industrial ceramics shop provides an environment which promotes a much closer relationship between teacher and student than is usually found in the academic classroom. Through close personal contact and observation, the industrial arts teacher can ascertain the ambitions, interests, aptitudes, attitudes and problems of the individual student. By noting the work habits, skills, and capacities of each pupil, the industrial ceramics teacher is in a unique position to assist the pupil in self-development, in revealing and appraising his own abilities and interests, and in acquainting him with educational and vocational possibilities that may exist in the future.

MOTIVATION

At the beginning of the term the teacher should inform the students that their purpose in the industrial ceramics shop is to learn how to use tools, machines, industrial techniques, and discover information about themselves. Their likes and dislikes, abilities and weaknesses provide important clues which serve as a basis for making rational choices concerning their future activities at school and at work.

Throughout the term, advise students of the rewards awaiting those who prepare themselves at the present time so that they will be eligible for future educational and vocational opportunities. The importance of earning a high school diploma and obtaining as much education as possible beyond the high school level should be stressed. Increased automation signifies that the unskilled worker will find it difficult to obtain employment; applicants for skilled occupations will be compelled to meet higher standards.

All the students must be informed of the significant changes that are taking place in the job market. A large number of students can be made aware of the teacher's recommendations for their continued education, a necessity in this changing technological age.

GROUP GUIDANCE

Apprise all students in the industrial ceramics shop of the many educational and vocational opportunities that relate to the ceramics industry. Related information lessons may include the following guidance topics:

Types of jobs in the ceramics industry
Job possibilities in related fields
Trade and industrial unions
Automation and trends in employment in the ceramics industry
Location of ceramics industrial centers
Wages and working conditions
Teaching ceramics and other industrial arts subjects

Other methods of providing guidance and acquainting students with the ceramics field are:

Visiting local manufacturing plants; brick-making, glass-forming, decorating, silk-screen decal production, and pottery-making establishments.
Posting "Help Wanted" advertisements on shop bulletin board.
Attending a talk by a representative of a ceramics union.
Showing motion pictures depicting employees at work in pottery plants, glass blowers, cement manufacturing plant.
Consulting with grade advisor, guidance counselor, and department chairman.
Gaining ceramics experience by after-school or summer employment.
Attending career conferences.
Organizing an occupational folder (outside preparation assignment) containing data relating to opportunities, requirements, wages, advancement, trends in the ceramics industry.

Inspecting exhibits at industrial shows depicting the products and operations of the ceramics industry. The Corning Glass Company has a permanent exhibit at their plant in Corning, New York.

INDIVIDUAL GUIDANCE

To advise a student interested in ceramics, seek out information to reveal the student's capabilities. The more comprehensive the teacher's knowledge of the student, the better equipped he is to estimate student potential. To obtain important facts concerning the student, these approaches can be used:

1. Observe the student at work in the shop. Note his skills in these areas of ability: manual dexterity, numerical, spatial, creative, artistic, problem-solving.
2. Discuss with the student your personal interest in his educational and vocational goals. Find out his ambitions and interests.
3. Consult with grade advisor, guidance counselor, department chairman, and other teachers to learn about the student.
4. Confer with parents to determine whether or not their hopes and aspirations for their child are realistic.
5. Examine the cumulative record to determine past performance in other school subjects and in previous schools. Note weak and strong subjects and examination scores.

EDUCATIONAL OPPORTUNITIES

Industrial arts students choosing their careers should think seriously about whether their abilities and inclinations should lead them to the field of industrial ceramics. If their interests lie in this direction, it is not too early to find out about the kind and amount of education needed to enter the ceramics industry and succeed in it.

Acquaint the students with the various educational opportunities that are open to them. They should discuss these possibilities with school advisors and parents. The ceramics teacher should also be in close communication with guidance personnel, furnishing them with pertinent information concerning individual students who express a desire for further education to qualify for positions in the ceramics industry. By the same token, it is the responsibility of the guidance counselors to cooperate with the ceramics instructor by reporting to him the latest information concerning employment trends and educational programs that apply to the ceramics field.

IN-SCHOOL PROGRAMMING

Other Industrial Arts Shops

The ceramics teacher can point out the desirability of students' exploration of as many industrial arts shops as are offered in the high school. The skills and knowledge that are basic to each individual shop are, in some measure, related to the ceramics industry. Students should be aware that the industrial arts program includes groups of two or three credits towards graduation.

Advanced Sequence

If the student has already taken other industrial arts classes in the school and has demonstrated an interest in, as well as an aptitude for, ceramics studies, he should be encouraged to continue in advanced work. In this way he can develop continuing skills in industrial ceramics techniques and in increased knowledge about the ceramics industry.

OCCUPATIONS IN THE CERAMICS INDUSTRY

The ceramics teacher can present a realistic appraisal of the employment situation that is likely to confront the industrial arts student. It is imperative that the student be cognizant of the spreading impact of technology resulting from automation, and the accelerating growth of the labor force resulting from the increasing influx of younger people into the labor market.

The necessity for career planning becomes obvious and, therefore, the teacher can enumerate those occupations that are presently in demand and are likely to be in demand in the near future.

CAREER-ORIENTED STUDENTS

Career-oriented students in the industrial ceramics shop should know that job opportunities exist and will continue to exist in many categories that relate, directly or indirectly, to the ceramics industry. Some of these job categories are:

1. Caster—filler of molds with slip
2. Jiggerman—operator of a jigger machine in the manufacture of pottery
3. Slip mixer—mixer of various ingredients for the proper slip
4. Turner—operator of a lathe to turn clay products
5. Finisher—man who straightens out edges of work and sponges edges
6. Handlemaker—maker of handles for utensils
7. Model maker—man who prepares model to make a mold
8. Mold maker—maker of plaster molds used in the manufacturing process
9. Kiln placer—setter of ware for bisque firing
10. Kiln fireman—regulator of temperature of the kiln
11. Dipper—applier of glaze
12. Glaze maker—preparer of the glaze
13. Decorator—applier of decals to pottery
14. Decal maker—printer of decals
15. Ceramic engineer—one who has the complete knowledge of the workings of the plant and engages in research and development activities

The job classifications listed above are skilled occupations which are obtainable only after a specific period of training has been completed. Furthermore, these jobs are not limited to New York City.

It must be emphasized that ceramic skills are utilized not only in the actual forming of ceramic products, but also in the installation, maintenance, and repair of machines and other mechanical devices. In addition, vast numbers of personnel possessing ceramics knowledge and experience are employed in the aerospace, plastics, structural clay products, steel industry, porcelain enamel industries, oil industries, electrical production, astronomy, photography, chemical, refractory, and abrasive materials industries.

ON-THE-JOB TRAINING

Many ceramic manufacturers offer on-the-job training which places the beginner at a work bench or machine where he is taught by an experienced worker to perform a specific operation. Once he has mastered the operation, the learner may progress to a more difficult one depending on the policy of the company and the skill and initiative of the employee.

COLLEGES AND UNIVERSITIES

Academic course students in the high school who intend to pursue careers in professional engineering or industrial arts teaching can attend a college or university to earn a degree in their field of study.

COLLEGE-BOUND STUDENTS

The student in the industrial ceramics shop who plans to continue his formal education by attending an engineering college should be alerted to the existence of areas of employment where there is a shortage of professionally qualified candidates. The areas of occupational demand which are closely allied to the operations and processes of ceramics work include the following engineering categories:

Administration and management	Production engineering
Machine design	Quality control
Manufacturing	Tool design
Industrial engineering	Research and development
Product design	Teaching

Demand occupations are open to the engineering aide, associate, or technician who works with engineering personnel in the design and development of new products. These semiprofessional positions are available to the graduate who has successfully completed the mechanical technology curriculum offered by the technical institute or the junior college.

COLLEGES OFFERING CERAMICS ENGINEERING

The following code provides a guide to the programs and degrees offered by schools listed.

B—Baccalaureate degree M—Master of Science degree D—Doctoral degree

California, University of, at Berkeley	M,D
California, University of, at Los Angeles	B,M,D
Case Institute of Technology, Cleveland, Ohio	M,D
Clemson College, Clemson, S.C.	B,M
Georgia Institute of Technology, Atlanta, Ga.	B,M
Illinois, University of, Urbana, Ill.	B,M,D
Iowa State College, Ames, Iowa	B,M,D
Massachusetts Institute of Technology, Cambridge, Mass.	M,D
Missouri School of Mines, Rolla, Mo.	B,M,D
New York State College of Ceramics, Alfred, N.Y.	B,M
North Carolina State College, Raleigh, N.C.	B,M,D
North Dakota, University of, Grand Forks, N.D.	B
Ohio State University, Columbus, Ohio	B,M,D
Pennsylvania State University, University Park, Pa.	B,M,D
Rutgers University, New Brunswick, N.J.	B,M,D
Texas, University of, Austin, Tex.	B
Utah, University of, Salt Lake City, Utah	B,M,D
Virginia Polytechnic Institute, Blacksburg, Va.	B,M
Washington, University of, Seattle, Wash.	B,M
West Virginia University, Morgantown, W. Va.	B

CAREER OPPORTUNITIES IN CERAMICS ENGINEERING

The ceramic engineer is afforded many job opportunities if he has a specialized background in one or more of the following areas:

CHEMISTRY	MINERALOGY	PRODUCT DESIGNING
GEOLOGY	MATHEMATICS	ENGINEERING DEVELOPMENT
PHYSICS	SALES	MARKETING

Employment opportunities exist in diversified areas within the field of industrial ceramics. The list below indicates the industrial applications that are representative of each area.

Areas	Applications	Areas	Applications
OPTICAL	Lasers Image Intensifiers Phosphors Pigments	ABRASIVES	Cement Grinding Wheels Cutting Tools Gauges
NUCLEAR	Fuel Elements Moderators Control Heat Exchange Protection	REFRACTORIES	Silica Fireclay Basic Zircon Special
AEROSPACE, AIRCRAFT CERAMICS	Radiation Suppression Coatings Turbine Blades Rocket Nozzles Combustion Chambers Nose Cones	CLAY STRUCTURAL	Brick Tile Sewer Pipes Terra Cotta Fire Linings
CERAMIC-METAL SYSTEMS	Porcelain Enamel Glass-Metal Seals Ceramic-Metal Seals Glass-Ceramic Seals Cermets Slags	GLASS	Bottle Plate Window Chemical Fiber Optical Special
ELECTRO-CERAMICS	High Frequency High Dielectric Resistors Semiconductors Magnetics Capacitors Piezoelectric	WHITEWARE	Artware Dinnerware Chemical Porcelain Sanitary Porcelain Dental Porcelain Special Porcelain Wall Tile Floor Tile

SOURCES OF INFORMATION ABOUT CERAMICS OCCUPATIONS

It is not the intent of this manual to describe in specific terms the duties and qualifications that are required for occupations that directly or indirectly pertain to the field of ceramics. The teacher may refer to these publications of the United States Department of Labor: *Dictionary of Occupational Titles* and *Occupational Outlook Handbook*. Copies can be obtained in the school liberary or in the office of the guidance counselor. The American Ceramic Society, 4055 No. High Street, Columbus, Ohio 43214 is another source of information concerning ceramic engineering.

Excellent guidance pamphlets are available for class distribution from sources listed in the References section of this chapter.

REFERENCES

Books

Burt, Samuel M. *Industry and Vocational-Technical Education*. New York: McGraw-Hill, 1967.

Hoppock, Robert. *Occupational Information*. New York: McGraw-Hill, 1967.

U.S. Department of Labor, Bureau of Labor Statistics. *Career Guide for Demand Occupations*. Washington, D.C.: Superintendent of Documents, 1965.

U.S. Department of Labor, Bureau of Labor Statistics. *Occupational Outlook Handbook*. Washington, D.C.: Superintendent of Documents, 1968–1969.

Articles

Carter, Patrick C. "Vocational Guidance: The Investigation of Occupations," *Industrial Arts and Vocational Education* 52: 12–13 (June, 1963).

Stephenson, George E., and Brierly, Clyde W. "Vocational Guidance—Integral Part of Industrial Arts," *Industrial Arts and Vocational Education* 54: 36–37 (October, 1965).

Guides and Pamphlets

Can I Be a Technician? General Motors Corp., Detroit, Mich. 48202.

Ceramics—Unlimited Horizons. Aluminum Company of America, 1501 Alcoa Building, Pittsburgh, Pa. 15219.

For Career Opportunities Explore the Wonder World of Ceramics. American Ceramics Society, 4055 No. High St., Columbus, Ohio 43214.

Your Opportunities in Industry as a Skilled Craftsman. National Association of Manufacturers, Education Department, 2 East 48 St., New York, N.Y. 10017.

Your Opportunities in Industry as a Technician. National Association of Manufacturers, New York, N.Y. 10017.

9

Testing

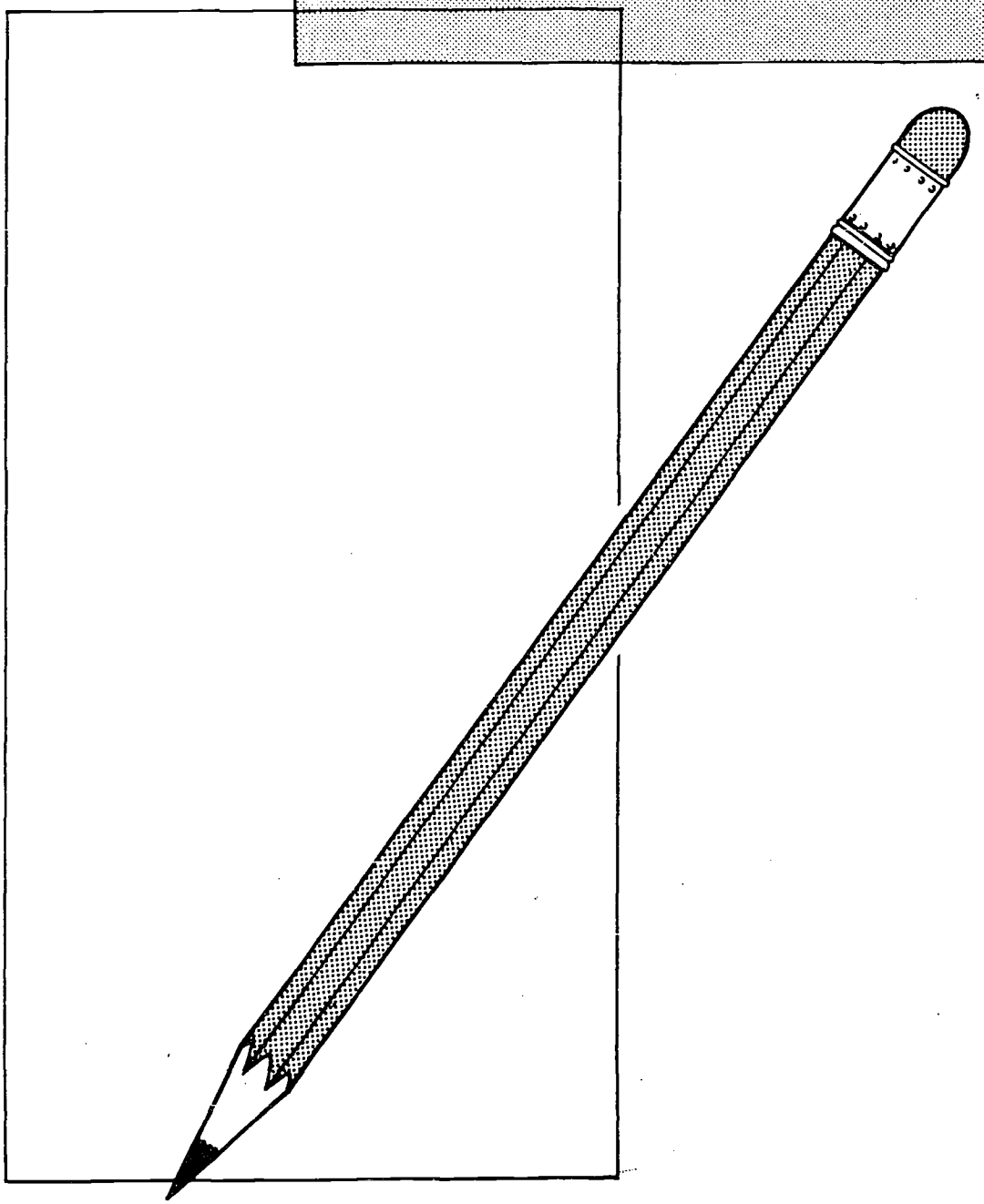

Testing should be an integral part of the industrial ceramics shop program because tests serve several important functions, which include:

Measuring individual and class achievement.
Revealing specific areas of strength and weakness.
Motivating students to further learning.
Establishing standards of skill and performance.
Indicating degree of teaching success.
Providing a basis for giving shop grades.

CRITERIA OF A GOOD TEST

Virtually all the tests used in the industrial arts ceramics shop are prepared, administered, scored, and interpreted by the teacher. It is essential when the teacher is organizing a test that he consider the following factors basic to good test construction:

Validity—measurement of what the test in intended to measure
Reliability—consistency in providing the same results
Objectivity—elimination of personal judgment of scorer
Standards—norms matched to the level of student ability
Administration—ease in giving and quickness in scoring

The most important steps in designing and giving tests are to:

1. Determine objectives—What should tests measure?
2. Decide on type of test—Should it be a performance, objective, essay, or combination type?
3. Formulate directions—Are instructions specific, clear, and concise?
4. Select questions—Are they of adequate scope, and are there a sufficient number of items?
5. Arrange layout and prepare copies—Should a mimeographed or printed form be utilized?
6. Give test and score—Are students following instructions?
7. Analyze results—What are the strengths and weaknesses of the test?
8. Return tests to students—Review results.

TESTS USED IN THE INDUSTRIAL CERAMICS SHOP

Safety Test

Written safety tests are mandatory at the beginning of the term and at periodic intervals throughout the term. These tests are designed to ascertain the student's knowledge of rules and regulations that apply to:

General safe practices in the industrial ceramics shop, including factors such as good housekeeping, clothing, health, and cleanliness.
Specific operations and processes involving tools, machines, and other shop equipment.

Instructions for preparing safety examinations and implementing the testing phase of the ceramics shop are given in the *School Shop Safety Manual,* Curriculum Bulletin No. 13, 1964–65. Part of the manual contains suggested safety examinations for the ceramics shop.

Performance Test

The performance test evaluates the manipulative skills of the student performing operations using tools, machines, and other equipment in the shop.

Informal Test

A short quiz covering a completed teaching unit to measure student achievement and ascertain quality of instruction is an informal test. It is usually a written or oral test using objective questions.

Uniform Test

A formal midterm or final examination that is broad in scope is called a uniform test. It is designed to include objective questions, essay questions, or a combination of both.

Vocabulary Test

This is an informal test to determine the student's comprehension of technical vocabulary used in demonstrations and related lessons. Ability to spell these words correctly is also tested.

Shop Math Test

This is an examination to ascertain the student's ability to make arithmetical computations and use mathematical formulas to solve practical ceramics problems.

TEST CLASSIFICATIONS

Performance Test

This is a practical test which measures the degree of manipulative skill of the learner. The student is required to demonstrate his ability to perform operations with tools and/or machines. Properly administered, this kind of test can help to diagnose student weaknesses.

Before proceeding with the assignment, the student should be provided with written instructions, a working drawing, adequate materials, and proper equipment. The teacher should prepare a check-sheet with a rating scale so that a final rating can be obtained which will reflect the following elements that make up the score of the performance test:

Quality of the work piece—accuracy and finish
Correct use of tools and equipment—safe practices
Time used to complete assignment—compare with predetermined rate
Ability to analyze the problem and plan the procedure

The performance test is the only kind of test which gives a true measure of the skill possessed by the learner. It is used to determine student abilities relating to planning, design, layout, measurement, model turning, mold making, casting, and other important skills listed in the course of study.

The degree of complexity of the performance test may vary from evaluation of a simple skill to evaluation of a combination of skills. A single skill might include positioning a joining tool on the jiggering arm. Jiggering a bowl on the potter's wheel is considered more complex because of the use by the student of additional tools and operations.

Objective Test

The objective (short-answer) test is often used in the industrial ceramics shop to cover a wide area of related information. Scoring is relatively rapid with the use of an answer key. Of all the varieties of examinations used in the shop, it is the least subjective in terms of marking.

The following examples illustrate the various kinds of objective tests.

SIMPLE RECALL TEST

This test is usually composed of questions requiring an answer in the form of a word, phrase, or number. A sample of this type of test follows.

Directions: Answer each of the following questions by writing in the correct answer in the blank space at the right.

1. What is the operation called in which a plaster mold and a hydraulic press are used to manufacture clay objects? _____
2. What is the name of the operation in which a joining tool is attached to an arm and is used to shape pottery on a wheel? _____
3. What is the new product which is formed when prefired particles of clay are proportionately mixed with unfired clay? _____
4. What is the name of the new type of concrete which produces air bubbles within the casting? _____
5. What is the name of the process in which a sheet of glass is placed inside a stainless steel mold and both are heated in a kiln or lehr? _____

MULTIPLE CHOICE TEST

This is one of the most valuable types of objective test. Multiple choice items can be expressed either as questions or as incomplete statements followed by several possible answers. A sample test follows.

Directions: Place on the line at the right of each statement or question, the letter preceding the word or phrase which best completes the statement or answers the question.

1. The type of pottery made in our ceramic shop is called
   (a) earthenware (b) china (c) porcelain (d) stoneware. _____
2. When clay is bone dry, it is ready for
   (a) glazing (b) engobe decoration (c) cutting a foot (d) bisque firing. _____
3. Earthenware will hold water only when it has been
   (a) glazed (b) overglazed (c) underglazed (d) underfired. _____
4. When it is compared to pottery plaster, properly mixed Hydrocal is
   (a) stronger (b) weaker (c) equal in strength (d) softer. _____
5. Overglaze decals are usually fired at
   (a) 1300°F. to 1400°F. (b) 1400°F. to 1000°F. (c) 1600°F. to 1700°F.
   (d) 1700°F. to 1800°F. _____

COMPLETION TEST

This test has the advantage of requiring specific answers which can be marked quickly and accurately. Because the emphasis is on recall rather than recognition, guessing is at a minimum.

Directions: Complete the statement by inserting the answer in the space provided at the right. sentence.

1. A mold is usually made from _____.
2. The pyrometer is a device used to _____.
3. Stilts are used to _____.
4. Stoneware will hold water even when it is not _____.
5. To stack (stacking) means to _____.

TRUE-FALSE TEST

This is a form of objective examination that is easy to construct and permits a wide sampling of content. However, this is the least desirable type of test for it encourages guessing. Statements should be expressed so that they are completely true or false without qualifications or exceptions.

Directions: Listed below are several true and false statements. If the statement is true, encircle the *T* at the left of the statement. If the statement is false, encircle the *F*.

T F 1. Air bubbles in clay will cause a piece of pottery to crack in firing.
T F 2. Glazed pieces may be stacked on top of one another in the kiln.
T F 3. A ball mill is used to mix glazes.
T F 4. Decals are representative of the direct printing method.
T F 5. Throwing refers to the removal of air bubbles at the wedging board by the process of slamming plastic clay on the plaster surface.

MATCHING TEST

Matching constitutes another form of objective test which is particularly well-suited for identifying technical terms, machine parts, and materials. It is recommended that a matching test question have from five to twelve individual items. All items should be related. Provide extra choices to reduce guessing.

Directions: On the line at the right of each item in column A write the number of the answer in column B which best describes the part.

A	B	
1. crazing	pottery after the first firing	_____
2. crackle	very dry clay	_____
3. bisque	glaze defect causing cracks in the glaze	_____
4. glaze	glaze decoration causing fine cracks in the glaze	_____
5. crawling	glaze defect caused by oil or dirt on the clay	_____
6. leather-hard	clay that is hard enough to hold its shape but soft enough to trim	_____
7. bone dry	glasslike material used to decorate and waterproof the clay	_____
8. underglaze		

IDENTIFICATION TEST

This is a recall-type test which measures the student's ability to recognize and indicate the names of tools. machines, and their parts.

Directions: Write the correct name of each part of the kiln in the corresponding numbered space at the right.

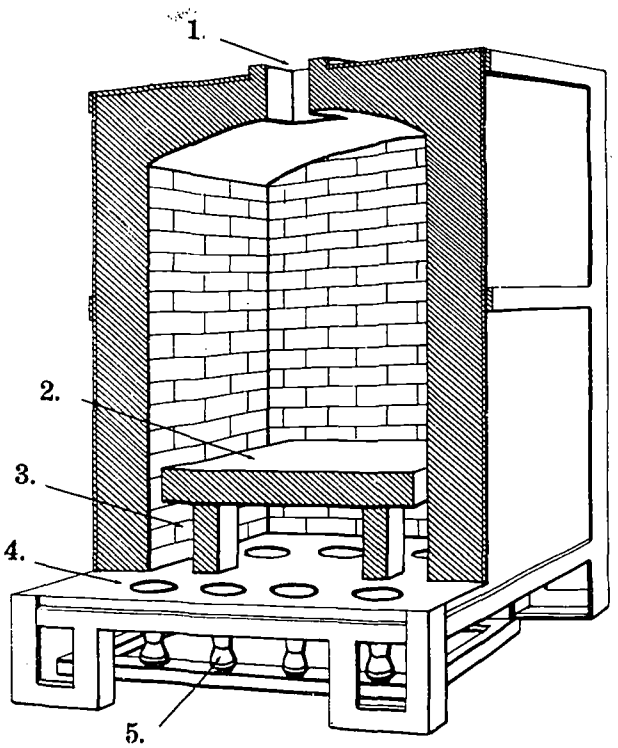

1. _____

2. _____

3. _____

4. _____

5. _____

REARRANGEMENT TEST

A convenient method to test the knowledge of sequence of operations and processes in performing a job or manufacturing a product.

Problem: HOW TO MAKE A PLASTER MOLD

Directions: Rearrange the operations below in their proper order by numbering the steps in the spaces provided at the left.

_____ mix plaster in bowl
_____ weigh plaster
_____ attach model to smooth surface
_____ remove air bubbles
_____ place cottle about model
_____ let plaster slake
_____ pour plaster
_____ measure water
_____ allow plaster to set
_____ calculate quantity of plaster and water needed
_____ sift plaster into water
_____ pour water into bowl

ESSAY TEST

The essay question requires the student to develop an answer in his own words. He must use complete sentences. The essay question measures not only the student's ability to evaluate, analyze, compare, and solve problems, but also reveals his ability to organize his thoughts and express himself clearly. Essay questions can be classified in various categories, each of which is illustrated by these examples:

SIMPLE RECALL TEST

1. State three causes of glaze defects which can occur during the firing process.
2. Name the four machines which can be used to mass produce clay products.
3. What are three mass production methods used in decorating pottery?

DESCRIPTION TEST

1. Explain what is meant by deflocculated clay.
2. State three reasons why clay should be wedged prior to its use.
3. Describe the chemical change which clay undergoes during the firing process.

COMPARISON TEST

1. Compare the differences between a raw glaze and a fritted glaze.
2. Give one advantage and one disadvantage of both the direct method and the indirect method in silk-screen printing used in ceramic shops.
3. Explain the advantages and the disadvantages in using both methods of wet and dry ram-pressing.

PROCEDURE TEST

1. List in the correct order, the major steps necessary to jigger a flat plate on the potter's wheel.
2. Describe the procedure for casting a plaster bat 10″ in diameter and 1″ in thickness.
3. What steps are necessary to finish the edges of a piece of glass which has been cut to size and shape?

Combination Test

This is an examination in which performance, objective, and essay questions are used to evaluate student achievement. Using these in combination results in an effective testing instrument. Examples of types of questions suitable for a combination examination to test knowledge and use of a glass cutter follow.

PERFORMANCE

Cut a piece of glass 4½″ × 6″ which is to be used for an ash tray.

OBJECTIVE

1. As an aid in cutting glass we dip the glass cutter into _____.
2. If the glass cutter slides on the glass without the wheel rolling, one should _____ the wheel.
3. In addition to scribing lines on glass, the glass cutter can _____ the glass.
4. In order to cut straight lines, one should use a _____.

ESSAY

Describe a method which can be used to cut a glass disc.

References

Ebel, Robert L. *Measuring Educational Achievement.* Englewood Cliffs, N.J.: Prentice-Hall, 1965.

Greene, Harry A.; Jorgensen, Albert N.; and Gerberich, J. Raymond. *Measurement and Evaluation in the Secondary School.* New York: Longmans, Green, 1954.

Odell, C.W. *How to Improve Classroom Testing.* Dubuque, Iowa: William C. Brown, 1958.

Remmers, H. H., and Gage, N. L. *Educational Measurement and Evaluation.* New York: Harper, 1955.

Tinkelman, Sherman N. *Improving the Classroom Test.* Albany: University of the State of New York, 1964.

Appendix

GLOSSARY

Binders (CMC, Ceramul "C", Carbowax)—hold glaze to ware and prevent glaze from settling out while in solution

Blockmold—the original mold for a pottery form, made directly from the model and used only for making working molds

Blunging—stirring slip in a container by means of revolving paddles

Burnishing—polishing with a stone or steel tool on leather-hard clay

Carbon arc—Resistance element used in kilns to attain up to 4000°F.

Case mold—a plaster pattern cast in a block mold and used to make a number of duplicate plaster molds for producing identical pieces of ware

Cermet—a combination of ceramic and metallic materials which combine the properties of both; machined and handled like metal; highly refractory and corrosion-resistant like ceramics

Cottle—a flexible form, of lumarith, cardboard, leather etc. used as a form for pouring plaster

Crucible—a refractory dish or pot, used for heating or melting materials

Cullet—waste glass added to a new batch of sand and other compounds; it aids in the melting of the batch of glass

Deflocculating—adding small amounts of alkaline substances to slip to keep the clay in suspension

Extruding—forcing material through a die; similar to squeezing toothpaste from a tube

Fettling—removing feather edges of mold joints from casting

Filter press—a machine for removing some of the water from a slip to give a plastic consistency

Flatware—plates, saucers, platters, round and oval dishes, and trays

Flux—a fusing agent which facilitates the melting of a glaze and the maturing of clay

Globar—Silicon carbide resistance element used in kilns to attain up to 2500°F.

Grout—cement used to fill the spaces between tiles in mosaic or tesserae work

Hollow ware—cups, bowls, and other objects having a deep cavity

Hydrometer (heavy fluids)—a cylindrical device for determining the specific gravity of thick or heavy fluids

Jiggering—a process of forming clay products, in which a mold shaping one side revolves against a template which shapes the other side; also, the machine on which this forming is done

Joggles—notches and matching projections on facing surfaces of plaster molds to provide alignment

Kanthol—Swedish patented resistance element used in kilns to attain up to 2300°F.

Keene cement—gypsum with all of the chemically combined water driven off

Magnetizing coil—a coil which can induce a magnetic field

Mold release—a powdered material which assists slip castings in coming loose from the plaster mold

Nichrome—Nickel-chrome resistance element used in kilns to attain up to 2000°F.

Notch—a key used to register two halves of a plaster mold; may be made of plaster or a brass insert (sometimes called joggle).

Plasticity—property of yielding under pressure without cracking and then retaining the new shape after the pressure is released

Pressing—forming plastic clay in a plaster mold by forcing it against the mold face

Pugging—changing clay into a plastic state in a pug mill, which is similar to a meat grinder

Raku—very soft, porous earthenware with a lead borate glaze, made in Japan chiefly for the tea ceremony

Raw glaze—a glaze containing no frit

Ram press—a press which forces clay against the face of a mold

Refractory—quality of resisting the effects of high temperatures; also the term given to materials high in alumina and silica used for making kiln insulation, muffles, and kiln furniture

Relief decoration—decorating a flat clay surface with a raised design similar to that used on a coin

Sagging—heating a piece of glass over a form, so that it sags and takes the shape of the form

Size—a substance such as soap coating, which prevents fresh plaster from sticking to old plaster

Slaking—the process of combining with water, as when plaster of paris is sifted into water and soaked before it is mixed

Sled—a device which employs a template to shape plaster while the plaster is soft

Spare—generally an additional portion of plaster shaped at the top of a model which causes a hole to be formed in its mold through which slip is poured. This also provides extra clay at the top of the freshly cast piece which is available for trimming and finishing

Spilling—applying a glaze of low viscosity (over a glaze of high viscosity) along the top edge of a pot so that the glaze runs down or spills during firing

Template—a profile gauge used to check or form the shape of pottery

Transfer printing—printing under or over the glaze decorations from an engraved plate or screen by the intermediate step of a special transfer paper

Vitreous—a hard, glassy, and nonabsorbent body or glaze

BIBLIOGRAPHY

Berlye, Milton K. *Encyclopedia of Working with Glass.* 2 vols. Dobbs Ferry, N.Y.: Oceana, 1967.

Board of Education, City of New York. *Ceramics for Secondary Schools.* Curriculum Bulletin No. 7, 1961–62 Series. New York: The Board.

Chandler, Maurice. *Ceramics in the Modern World.* New York: Doubleday, 1968.

Dodd, A. E. *Dictionary of Ceramics.* Totowa, N.J.: Littlefield, Adams, 1957.

German, W. L. *Modern Ceramic Practice.* New York: Transatlantic Arts, 1967.

Haggar, Reginald G. *Glass and Glassmakers.* New York: Roy, 1963.

Hove, John E., and Riley, W. C. *Ceramics for Advanced Technologies.* New York: John Wiley, 1965.

Isley, H., and Frechette, D. *Microscopy of Ceramics and Cements.* New York: Academic Press, 1955.

Jones, G. O. *Glass.* New York: Barnes & Noble, 1956.

Kenny, John B. *Complete Book of Pottery Making.* Philadelphia: Chilton, 1962.

King, A. G., and Wheildon, W. M. *Ceramics in Machining Processes.* New York: Academic Press, 1966.

Kingery, W. D. *Ceramic Fabrication Processes.* Cambridge, Mass.: M.I.T. Press, 1958.

Kinney, Kay. *Glass Craft.* Philadelphia: Chilton, 1962.

Kosloff, Albert. *Ceramic Screen Printing.* Cincinnati, Ohio: Sign of the Times, 1962.

Leach, Bernard. *A Potter's Book.* New York: Transatlantic Arts, 1946.

Lee, P. William. *Ceramics.* New York: Reinhold, 1961.

Maloney, F. J. Terence. *Glass in the Modern World.* New York: Doubleday, 1968.

McMillan, Peter. *Glass—Ceramics.* New York: Academic Press, 1964.

Mills, Flora R. *Potters and Glassblowers.* San Antonio, Tex.: Naylor, 1967.

Mitchell, Lane. *Ceramics: Stone Age to Space Age.* New York: McGraw-Hill, 1963.

Norton, F. H. *Ceramics for the Artist Potter.* Reading, Mass.: Addison-Wesley, 1956.

———. *Elements of Ceramics.* Reading, Mass.: Addison-Wesley, 1952.

Olson, Delmar. *Industrial Arts for the General Shop.* Englewood Cliffs, N.J.: Prentice-Hall, 1960.

Parmelee, C. W. *Ceramic Glazes.* Chicago, Ill.: Industrial Publications, 1951.

Phillips, Charles J. *Glass: Its Industrial Applications.* New York: Reinhold, 1960.

Rhodes, Daniel. *Clay and Glazes for the Potter.* Philadelphia: Chilton, 1959.

Roy, Vincent. *Ceramics.* New York: McGraw-Hill, 1959.

Scholes, Samuel R. *Earth and Fire.* Alfred, N.Y:. State University College of Ceramics, 1964.

Shaw, K. *Ceramic Colors and Pottery Decoration.* London: Maclaren, 1962.

Singer, Felix and Sonja. *Industrial Ceramics.* New York: Tudor, 1965.

Smith, Lavon B., and Maddox, Marion E. *Elements of American Industry.* Bloomington, Ill.: McKnight & McKnight, 1966.

Swanson, Robert S. *Plastics Technology.* Bloomington, Ill.: McKnight & McKnight, 1965.

Tinklepaugh, J. and Crandall, W. *Cermets.* New York: Reinhold, 1960.

Waye, Basil E. *Introduction to Technical Ceramics.* New York: Transatlantic Arts, 1967.

Worrall, W. E. *Raw Materials.* New York: Transatlantic Arts, 1967.

SOURCES OF GUIDES AND PAMPHLETS

Aluminum Company of America, 1501 Alcoa Building, Pittsburgh, Pa. 15219
Ceramics—Unlimited Horizons
How Good Are Ceramic Tools? Report No. 435

Cambridge Glass Co., Cambridge, Ohio 43725
The Art of Making Fine Glassware

Coors Porcelain Co., 600 Ninth St., Golden, Colo. 80401
The Evolution of a Lump of Clay

Corning Glass Works, Corning, N.Y. 14830
All About Glass
Engineering with Glass
Sand and Imagination
This Is Glass

Edward Orton Jr. Ceramic Foundation, 1445 Summit St., Columbus, Ohio 43201
The Properties and Uses of Pyrometric Cones

Glass Container Manufacturers Institute, Inc., 330 Madison Ave., New York, N.Y. 10017
The Story of Glass Containers
The Genesis of a Jar

Lenox, Inc., Prince and Meade Sts., Trenton, N.J. 08605
Command Performance in Fine China
The Fine China Story

Mayer Interpace China Co., Sixth St. and Second Ave., Beaver Falls, Pa. 15010
China from the Dawn of History

Portland Cement Assoc., 33 W. Grand Ave., Chicago, Ill. 60610
A Practical Course in Concrete
Cement and Concrete Reference Book

Shenango China, Inc., P.O. Box 120, New Castle, Pa. 16103
China Care
What About Substitutes for China
Limited Edition Patterns

Syracuse China Corp., 1858 West Fayette St., Syracuse, N.Y. 13201
The Story of Fine China
Making of a Cup

Thomas C. Thompson Co., 1539 Old Deerfield Road, Highland Park, Ill. 60035
Enameling on Copper and Other Metals

Tile Council of America, Inc., 360 Lexington Ave., New York, N.Y. 10017
Ideas Unlimited

Tostoria Glass Co., Moundsville, W. Va. 26041
Crystal Gazing (Glass)

U.S. Dept. of the Interior, Bureau of Mines, U.S. Government Printing Office, Washington, D.C. 20240
A Chapter from Mineral Facts and Problems, Bulletin No. 556

FILMS

An alphabetical listing of the sources of industrial ceramics films follows. The films are listed after their sources.

Communications Division, State Education Department, Albany, N.Y. 12224
- *Bricklayers*
- *Cement Makers*
- *Ceramic Tile Workers*
- *Glass*
- *Potters*

Lenox Inc., Prince and Meade Sts., Trenton, N.J. 08605
- *The Making of Fine China*

Modern Talking Picture Service, 3 E. 54 St., New York, N.Y. 10022
- *Crystal Clear*
- *From Mountains to Microns*
- *The Drama of Portland Cement*

Owens-Illinois Glass Co., Box 1035, Toledo, Ohio 43601
- *Blow Pipes*

Universal Education & Visual Arts, 221 Park Ave. So., New York, N.Y. 10010
- *Ceramics in Art and Industry*

U.S. Bureau of Mines, 4800 Forbes St., Pittsburgh, Pa. 15219
- *Manufacturing of Abrasives*

CERAMICS EQUIPMENT

Suppliers of the equipment listed below advertise their products in periodicals of the ceramics industry. These magazines should be consulted, since many manufacturers who advertise in them will furnish, on request, data concerning their products. Further information relating to specific models described in this manual can be obtained from the Bureau of Industrial Arts and the Bureau of Supplies.

EQUIPMENT

Pug mill
Muller mixer
Double ball mill
Kiln (high temperature)
Electric potter's wheel and jiggering attachment
Arc lamp and vacuum frame
Scale: triple-beam balance (grams)
Glass drilling machine
Extruder
Hydraulic press (500 lbs. pressure) with gauge
Silk-screen printer for cylindrical objects
Glass-melting furnace (gas fired)
Engraver
Wet belt sander-grinder
Blunger, container, and pump for slip
Vibrating screen
Filter press
Spray booth
Compressor, spray gun, and air brush
Magnetizer
Vacuum cleaner (wet and dry)
Magnetic separator