DOCUMENT RESUME

ED 089 778 IR 000 503

AUTHOR	Bellamy, Harold J.; And Others
TITLE	Design of Training Systems, Phase I Final Report, Volume I of II.
INSTITUTION	Naval Training Equipment Center, Orlando, Fla. Training Analysis and Evaluation Group.
REPORT NO	IBM-FSD-ESC-73-535-005; NAVTRADQUIPCEN-TAEG-12-1-v-1
PUB DATE	Dec 73
NOTE	468p.; For related documents see IR 000 502 and IR 000 504
EDRS PRICE	MF-$0.75 HC-$22.20 PLUS POSTAGE
DESCRIPTORS	Computer Oriented Programs; *Computers; *Educational Programs; *Instructional Design; *Instructional Systems; Management; Management Systems; *Mathematical Models; *Military Training; Models; Program Descriptions
IDENTIFIERS	*Design of Training Systems; DOTS; Naval Education and Training System; NETS; United States Navy

ABSTRACT

Full details are presented on Phase I of the three-stage project "Design of Training Systems" (DOTS). A functional descriptive model of the current Naval Education and Training System (NETS) is provided, along with idealized concepts oriented toward a 1980 time frame. Technological gaps and problem areas are noted, but no organizational elements are identified since it is specified that the prime areas of interest are the functions performed. Finally, a rationale is offered for the selection of candidate mathematical models which will be developed in Phase II of the project for the purpose of assisting training managers with planning and decision-making related to the management of training programs. (Author)

TAEG

TRAINING
ANALYSIS
AND
EVALUATION
GROUP

TAEG REPORT
NO. 12–1

DESIGN OF TRAINING SYSTEMS
PHASE I REPORT — Volume 1

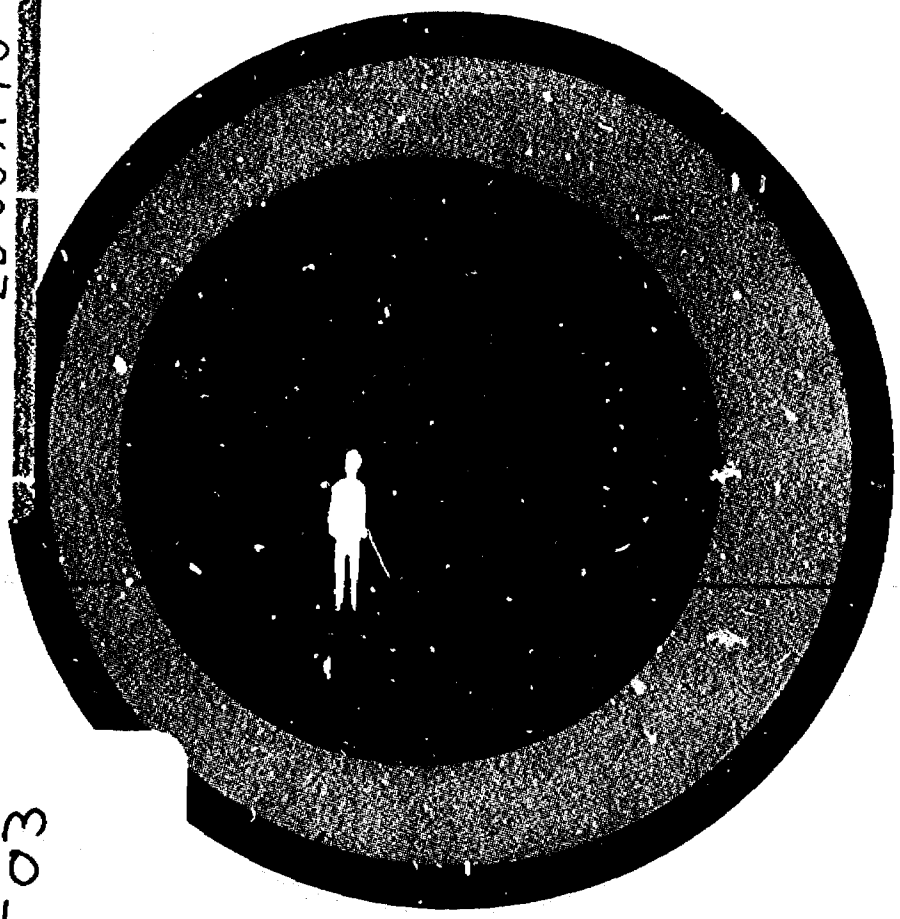

FOCUS ON THE TRAINED MAN

DECEMBER 1973

NAVAL TRAINING EQUIPMENT CENTER
ORLANDO, FLORIDA 32813

Technical Report: TAEG REPORT NO. 12-1

DESIGN OF TRAINING SYSTEMS

PHASE I REPORT

ABSTRACT

This report presents a functional descriptive model of the current Naval Education and Training System and idealized concepts oriented toward a 1980 time frame. While technological gaps and problem areas are presented, no organizational elements are specified, since the prime areas of interest are the functions performed. In addition, the rationale for selection of candidate mathematical models to be developed in Phase II is given.

Strategic working assumptions for the 1980's are presented in Volume 2 of this report.

The study was performed by IBM for the Training Analysis and Evaluation Group of the Naval Training Equipment Center, Orlando, Florida (Contract No. N61339-73-C-0097).

TAEG REPORT NO. 12-1

FOREWORD

This report presents Phase I of a three-phase project called "Design of Training Systems," undertaken in consonance with the requirements of Advanced Development Objective 43-03X, "Education and Training." One of the major objectives of the project is to develop tools for the effective management of training organizations. The tools will include mathematical models which will be the basis for computer simulation of significant portions/subsystems of the training system. This phase is a required prelude to Phase II which involves the development of mathematical models and their validation. Phase III covers the verification of the models which have been developed.

Sincere thanks is expressed for the close cooperation of all elements of the Naval Education and Training System both within and outside the Naval Education and Training Command. This analysis would not have been possible without such assistance.

Principal investigators for this study were Dr. A. Elkin and Mr. L. Duffy who performed the basic analysis and developed the flows and supporting discussion of Section VI. The parts of the report dealing with evaluation of candidate models were developed by Mr. H. Bellamy, Mr. R. Yanko, and Mr. S. Stasak (part-time). The strategic assumptions contained in the Appendix (Volume 2) were developed by Mr. R. Hallman supported by the IBM Advisory Group.

The Training Analysis and Evaluation Group project team complemented the contracted effort by establishing organizational interfaces and by providing guidance.

TABLE OF CONTENTS

VOLUME 1

SECTION		PAGE
	FOREWORD	i
I.	INTRODUCTION	
	A. STATEMENT OF THE PROBLEM	I-1
	B. SIGNIFICANT EARLY DOCUMENTS	I-1
	1. Request for Proposals	I-1
	2. Management Support Plan	I-2
II.	BACKGROUND OF THE PROJECT	
	A. ADVANCED DEVELOPMENT OBJECTIVE (ADO) 43-03X	II-1
	B. THE DOTS PROJECT	II-1
III.	WORKING CONCEPTS	
	A. EDUCATION/TRAINING AS A SYSTEM	III-1
	1. Functional vs. Organizational Approach	III-2
	2. Bounds/Interfaces of the System	III-2
	B. ROLE OF NAVAL EDUCATION AND TRAINING COMMAND	III-7
IV.	OVERVIEW OF THE PHASES	
	A. STRATEGIC OBJECTIVE	IV-1
	B. PHASE I OVERVIEW	IV-1
	1. Objectives	IV-1
	2. General Comments	IV-2
	C. PHASE II OVERVIEW	IV-2
	1. Objectives	IV-2
	2. General Comments	IV-3

SECTION PAGE

D. PHASE III OVERVIEW IV-3

1. Objectives IV-3
2. General Comments IV-3

V. INTRODUCTION TO PHASE I

A. FUNCTIONAL FLOW OF CURRENT SYSTEM V-1

B. IDEALIZED APPROACH V-1

C. ASSUMPTIONS AND VARIABLES V-1

D. TECHNOLOGICAL DATA BASE V-1

E. CANDIDATE MODEL LIST V-2

VI. DESCRIPTIVE FUNCTIONAL MODEL OF THE NAVAL EDUCATION AND TRAINING SYSTEM

A. INTRODUCTION VI-1

B. OBJECTIVES VI-1

1. Preparation of a Descriptive Functional Model VI-1
2. Limiting the Scope of Investigation to a Manageable Size VI-1
3. Delineating Gaps and Problems in the Current System VI-2
4. Highlighting Areas/Approaches Which Could be Improved VI-2

C. ANALYTICAL APPROACH VI-2

1. Field Visits VI-2
2. Review of Naval Instructions, Reports, and Miscellaneous Documentation VI-4
3. Functional Flows VI-4

D. GENERALIZED FUNCTIONAL DESCRIPTION AND ANALYSIS OF NAVAL EDUCATION AND TRAINING VI-7

1. Overview of the Current System VI-7

SECTION PAGE

2. Strategic Working Assumptions Expected to Influence the Education and Training System of the 1980's VI-16
3. Overview of the Idealized System VI-22

E. PRIMARY FUNCTIONS OF THE NAVAL EDUCATION AND TRAINING SYSTEM VI-25

1. Function 1.0 Develop Training Requirements . VI-25
2. Function 2.0 Coordinate and Control Training VI-47
3. Function 3.0 Analyze and Plan Training . . . VI-75
4. Function 4.0 Implement Training VI-107
5. Function 5.0 Evaluate Performance (Feedback). VI-179
6. Function 6.0 Manage Training Resources . . . VI-237
7. Function 7.0 Perform Training Research . . . VI-345
8. Function 8.0 Support Training VI-365

F. DISCUSSION VI-405

VII. SELECTION AND EVALUATION OF CANDIDATE MODELS

A. INTRODUCTION VII-1

B. GENERAL APPROACH VII-1

C. CANDIDATE MODELING AREA DESCRIPTIONS VII-4

1. Training System Capabilities/Requirements . . VII-4
2. Training Resource Allocations VII-5
3. Management of Congressional AOB Ceilings . . . VII-5
4. Budget Analysis Model VII-5
5. School Planning Model VII-5
6. Aviation Training Management/Planning System . VII-6
7. Optimal School Location Model VII-6
8. Educational Technology Evaluation Model . . . VII-6
9. Course Costing Model VII-7
10. Fleet Training Requirements Projection Model . VII-7
11. Quota Generation Model VII-7
12. Career Path Model VII-8
13. Training Process Flow Models VII-8
14. Management of Fixed Resources Model VII-9
15. Schoolhouse Training vs Off-Site Training . . VII-9
16. Minimum Level of Training VII-10
17. Training/Billet Assignment System for Students Completing Individualized Instruction Curriculum VII-10

SECTION PAGE

18. Permanent Change of Station (PCS)/ Temporary Additional Duty (TAD) Budget Impact on Training VII-10
19. Training Objective Analysis VII-10
20. NEC Manpower Overage VII-11
21. Physics of Learning VII-11

D. CANDIDATE SELECTION CRITERIA VII-11

1. Feasibility VII-11
2. Practicality VII-12
3. Training Orientation VII-12

E. CRITERIA DESCRIPTIONS VII-12

1. Design of Training System Project Definition . VII-12
2. Model Application Time Span VII-13
3. Benefit Potential VII-13
4. Organizational Level VII-13
5. Technique Availability VII-14
6. Data Base Availability VII-14
7. Projected Model Development Effort VII-14
8. Projected Model Application/Verification Effort VII-14
9. Model Objective VII-15

F. CANDIDATE EVALUATION VII-15

G. DESCRIPTION OF SELECTED MODELS VII-28

1. Educational Technology Evaluation Model . . . VII-28
2. Training Process Flow VII-30
3. System Capabilities/Requirements and Resources Models VII-31
4. Model Interaction VII-32
5. User Interface VII-32

LIST OF FIGURES

NOTE: Functional flows are listed within each functional section -- under (b.) Description.

FIGURE NO.	TITLE	PAGE
I-1	Design of Training Systems Project Structure	I-3
I-2	IBM Study Team	I-4
I-3	Project Office Team	I-5
III-1	Conceptual Model of the Naval Education and Training System	III-3
III-2	Top Level Command Structure	III-5
III-3	Organizational Relationships Between the Fleet and the Single Naval Education and Training Command . . .	III-6
III-4	CNET Functional Commands	III-8
VI-0.0	Functional Flow Symbology	VI-8
VI-0.1	Functional Flow Symbology	VI-9
VI-0.2	Naval Education and Training System (Information and Control)	VI-12
VI-0.3	Naval Education and Training System (Personnel/ Training Flow)	VI-13
VI 1.2.6	Pre-Analyze Training Needs (Idealized)	VI-45
VI 3.6	Conceptual Phase (Phase I) of Ship Life Cycle	VI-101
VI 3.7	Validation Phase (Phase II) of Ship Life Cycle . . .	VI-103
VI 4.7	Idealized Personnel Flow (1980 Time Frame)	VI-171
VI 4.8	Idealized Course Analysis - to Reduce Attrition . . .	VI-177
VI 6.4.5.4A	Cost of Training	VI-307
VI 6.4.5.4B	Enlisted-Officer-Civilian Staff	VI-308
VI 6.4.5.4C	Supply Runs	VI-309

FIGURE NO.	TITLE	PAGE
VI 6.4.5.4D	Update and List Hardware Support	VI-310
VI 6.4.5.4E	Instructor Time Utilization	VI-311
VI 6.4.5.4F	Basic Enlisted	VI-312
VI 6.4.5.4G	Advance School	VI-313
VII 1	Naval Education and Training System (Information and Control)	VII-2
VII 2	Naval Education and Training System (Personnel/ Trainee Flow)	VII-3
VII 3	Interaction of Selected Models	VII-29

LIST OF TABLES

TABLE NO.	TITLE	PAGE
VI 2.6A	Inputs to Training Program Coordinators (TPC's) . . .	VI-68
VI 2.6B	Outputs of Training Program Coordinators (TPC's) . .	VI-70
VI 5.1	Advantages and Disadvantages of Potential Approaches to the Development of Training Feedback Information .	VI-190
VII 1	Preliminary Candidate Model Evaluation	VII-16
VII 2	Training Process Flow Model Preliminary Evaluation .	VII-19
VII 3	Education Technology Evaluation Model Preliminary Evaluation	VII-20
VII 4	System Capability/Requirements Model Preliminary Evaluation	VII-21
VII 5	Training Resource Allocation Model Preliminary Evaluation	VII-22
VII 6	Aviation Training Management/Planning Model Preliminary Evaluation	VII-23
VII 7	Management of Congressional AOB Ceilings Model Preliminary Evaluation	VII-24
VII 8	Budget Analysis Model Preliminary Evaluation	VII-25
VII 9	Comparative Model Rankings	VII-26

I. INTRODUCTION

A. STATEMENT OF THE PROBLEM

The Naval Education and Training System (NETS) is currently subject to extensive changes both internal and external. External changes include a switch from expansion to contraction of the Navy as a whole, the switch to zero draft, and prospects of decreasing military spending. Internal changes include the consolidation of most education and training activities under a single command and the application of new techniques and approaches to training.

These and other changes permit, and at the same time require, innovation and flexibility on the part of managers and planners within the NETS. However, successful innovation requires some means for assessing the probable consequences of change prior to implementation. Such assessment can be the judgment of a manager or planner based on accurate data concerning the system as it exists, formal extrapolations employing statistical or deterministic techniques or both.

The problem addressed by the Design of Training Systems (DOTS) Project is to employ the techniques of system analysis, educational technology, behavioral science, and operations research to provide a set of tools for gathering data on the performance of the system as is and for projecting the consequences of changes to the system.

B. SIGNIFICANT EARLY DOCUMENTS

1. Request for Proposals

In October 1972, a Request For Proposals (RFP) was issued by the Naval Training Equipment Center (NAVTRAEQUIPCEN), Orlando, Florida. This RFP was directed specifically at the problem outlined in Paragraph IA and requested bids for a three phase effort culminating in the development of a set of mathematical models to be used by the manager/planner in the NETS.

The suggested lengths and purposes of the three phases were as follows:

a. Phase I: 10 months, develop a descriptive functional model of the NETS with Naval Education and Training Command (NETC), formerly the Naval Training Command, as its focal point. Determine the assumptions, approaches and methodologies to be tested in subsequent phases using predictive techniques. Establish a technological data base for mathematical model design.

b. Phase II: 15 months, select the sub-set of mathematical models to be developed, provide a data base for model testing, project hardware/software and personnel requirements for operational system implementation, and develop a model verification plan for Phase III.

c. Phase III: 12 months, verify the models developed during Phase II using real-world data and operational situations.

The RFP did not contain government estimates of required man-hours or specific educational qualifications for personnel nor were responders limited to the phased approach outlined above.

2. Management Support Plan

One month after the contract award date (1 February 1973) the contractor submitted a detailed Management Support Plan (MSP) for Phase I of the study. This plan contains detailed descriptions of the study team organization, Contractor/Navy interface, tasks to be completed during Phase I, site visit schedules, and study milestone charts.

Figure I-1 shows the DOTS project structure. The Contractor Study Team (Figure I-2) receives direction and assistance from the Project Office Team (Figure I-3).

The IBM Advisory Group provides internal review and project guidance as well as access to other useful expertise within the company. The Advisory Group has participated actively in defining assumptions as to future trends for the NETS.

The Navy Working Group provides points of contact for the contractor team to draw upon, guides study development by contributing ideas and recommendations, and from time to time, contributes on specific assignments.

The Navy Advisory Committee provides points of contact outside of the Naval Education and Training Command and provides policy guidance on the direction taken by the study.

On 14 and 15 March 1973, the study team, the project office and the working group held a joint meeting to review and discuss the MSP. During this meeting some changes to the MSP, noteably in the travel agenda, were suggested. These changes were incorporated into the MSP.

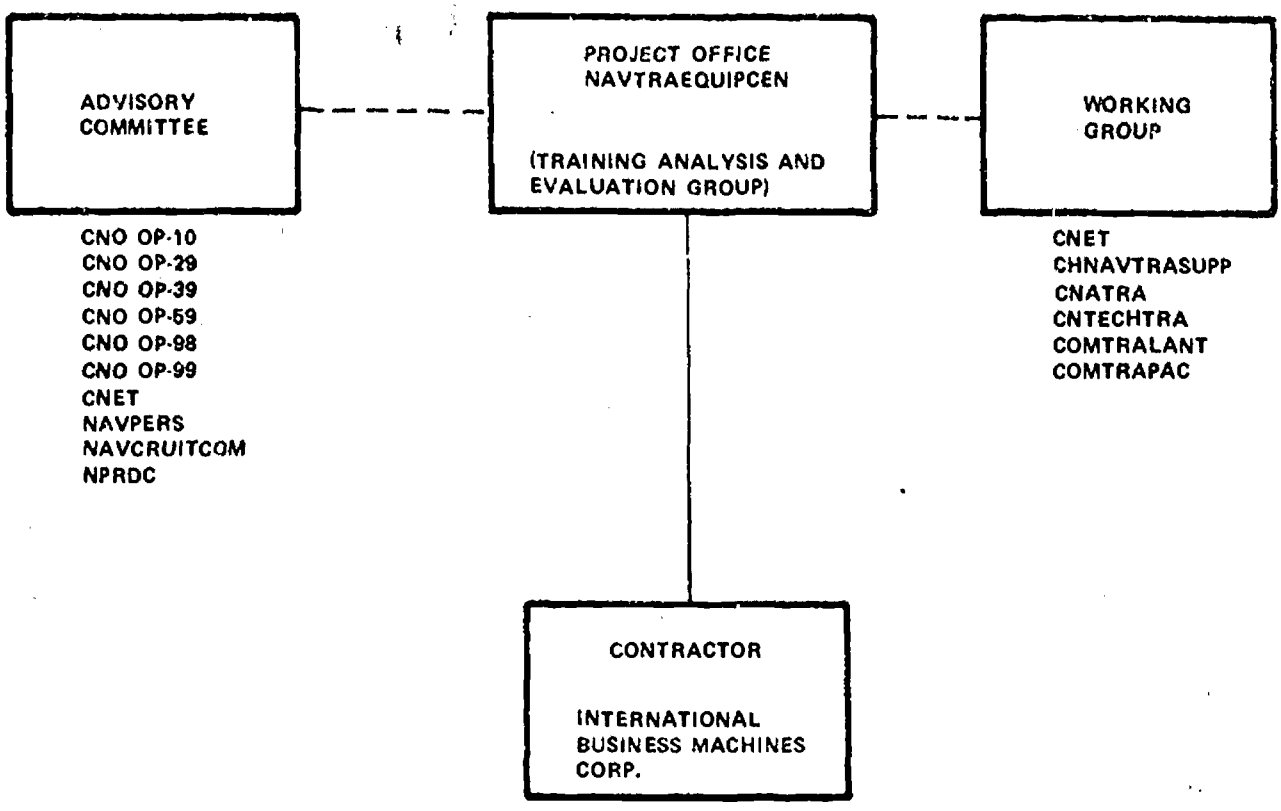

FIGURE I-1 DESIGN OF TRAINING SYSTEMS PROJECT STRUCTURE

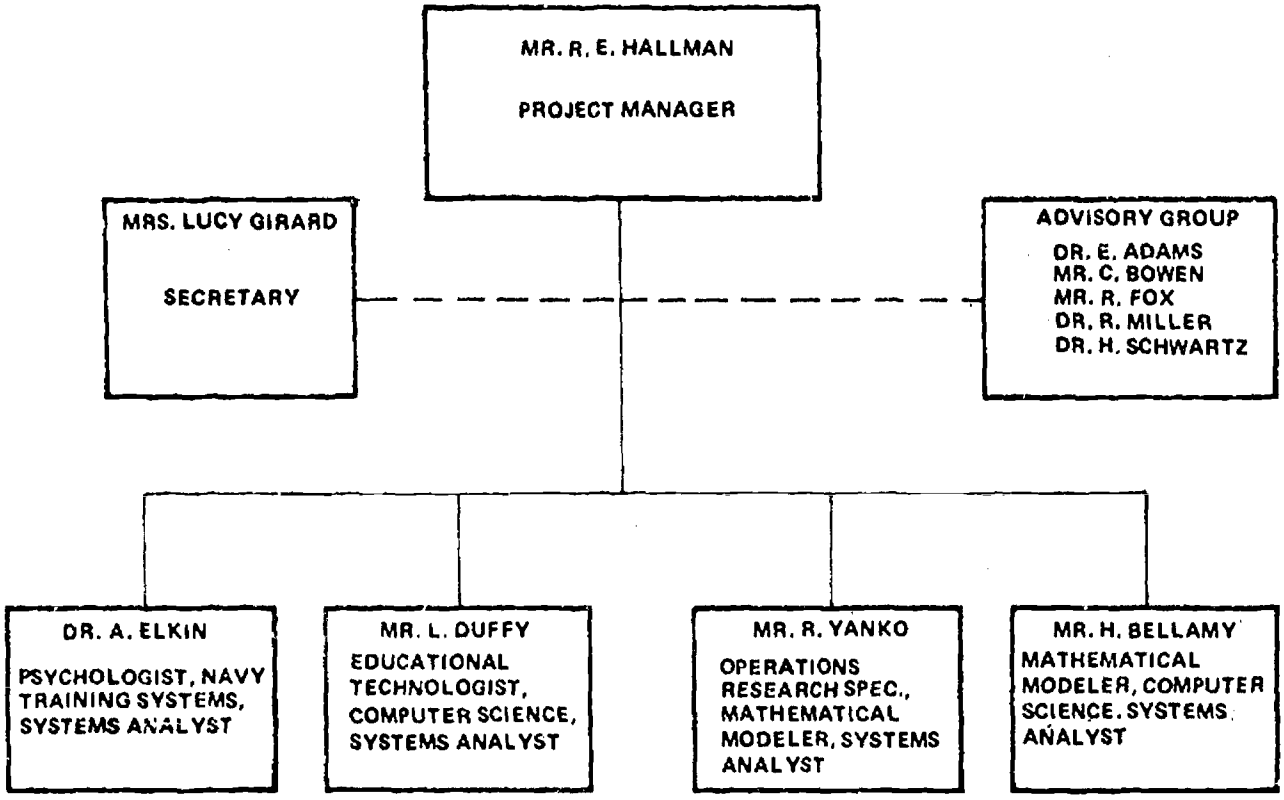

FIGURE I-2 IBM STUDY TEAM

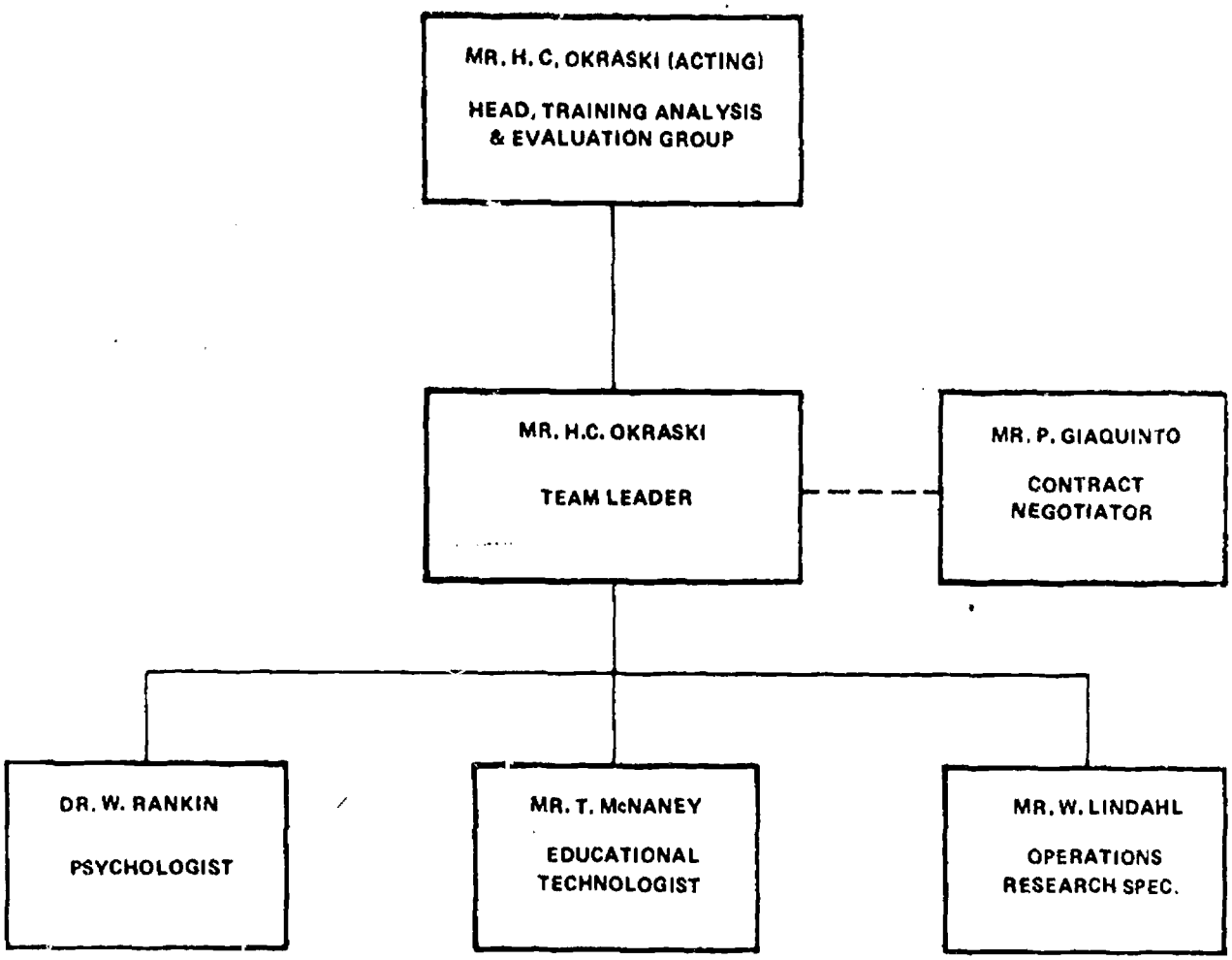

FIGURE I-3 PROJECT OFFICE TEAM

By including any mutually agreed upon changes to study methodology or emphasis in the MSP as updates, the MSP becomes a working document reflecting the current direction of the study. The MSP is updated on a monthly basis.

The MSP was updated to include the Phase II support plan on 1 August 1973. An overview of Phases I, II and III as they are currently being carried out is contained in Section IV of this report.

II. BACKGROUND OF THE PROJECT

A. ADVANCED DEVELOPMENT OBJECTIVE (ADO) 43-03X

ADO 43-03X was originally promulgated by CNO in 1965. The overall purpose of the original ADO was to study the use of improved training techniques and training evaluation methods. However, recognition was given at that time to the need for such planning aids as requirements prediction tools and educational technology impact assessment.

As currently constituted, the subtasks under Technical Development Plan 43-03X are more heavily oriented toward learning systems and their control. Subtask P01A, the Design of Training Systems (DOTS), stresses a step-wise progression from systems analysis to the development of computer based models of selected subelements within the NETS.

B. THE DOTS PROJECT

The principal Development Agent for the ADO Program is the Navy Personnel Research and Development Center. The Training Analysis and Evaluation Group (TAEG), NAVTRAEQUIPCEN, is assigned responsibility for the project.

TAEG provides the multidisciplinary talent required to oversee a project which covers such a diversity of activity in terms of educational technology, operations research and systems analysis, and psychology.

III. WORKING CONCEPTS

A. EDUCATION/TRAINING AS A SYSTEM

The scope of any educational/training system whether military, city/state, or private industry will be determined by the structure and needs of the organization served by the system. A privately endowed university is governed by a different set of conditions than is a maintenance training system for an appliance manufacturer. Each serves its particular sector in a different way and operates in a totally different time context. Yet there is commonalty in that both systems are reactive and the success of each will be determined, in the long run, by their ability to react appropriately to changing requirements. Both systems are governed by certain basic conditions:

1. Who is to receive education/training?

2. Where is the education/training to take place?

3. What are the students to be taught?

4. How are the students taught?

5. What will the students do after completing training?

6. How well will they do it?

The degree of importance of each of these considerations differs between the university and the maintenance course because of the profound difference in the nature and purpose of the two systems. In some cases the questions are almost trivial for one system but important for the other.

The Naval Education and Training System (NETS) must provide levels of education and training from recruits learning basic military courtesy to cadets engaged in an undergraduate college curriculum and senior officers addressing strategic geopolitical questions. While for most education or training systems some of the above named conditions may be trivial (e.g., where training is to take place may involve only room assignment), NETS operates in an environment where all six factors may be of prime importance depending on the part of the system being investigated.

1. Types of individuals receiving education or training: from high school dropouts to PhD candidates.

2. Location of training: at least 34 geographic locations, many of which have multiple facilities. This does not count Naval Reserve or NROTC training.

3. Subject matter: reflects the same variety and scope as the students input to the system.

4. Instructional methodology: all types ranging from conventional classroom to self-paced individualized including simulators and operational hardware.

5. & 6. Training Application and Evaluation: both reflect the diversity and size of the system served by the NETS.

In order to study so large and diffuse a system efficiently, it was necessary to establish certain definitional boundaries and relationships early in the study effort.

1. Functional vs. Organizational Approach

The first question to be answered was the extent to which a functional system description could be achieved without reference to the organization. A functional approach to describing the system was stressed in the original proposal and, in view of the rapid organizational changes taking place within NETS, appeared to be most promising. However, functions are performed within organizations and the personnel performing those functions tend to describe their input and output activities in terms of other organizations. Furthermore, command level organizations are most often clustered at a particular location so that the investigation of a single function (which crosses organization lines) requires visits to multiple locations. Therefore, regardless of the final form of the system description the initial effort was oriented toward learning the organization and determining those functions which took place within each organizational element.

Considering the broad range of students served and subject matter covered it was unlikely that the NETS would prove to be a monolithic, unified system. Initial investigation showed that the NETS is, rather, a set of relatively independent training subsystems defined by training objectives. While the great majority of these subsystems come under the charter of the Chief of Naval Education and Training (CNET) some significant training activities take place in other organizations.

2. Bounds/Interfaces of the System

Initially, the functions included within the NETS were assumed to be similar to those shown in Figure III-1. Organizationally, those functions included within the dashed line are part of the CNET organization. Those functions wholely or partly outside the

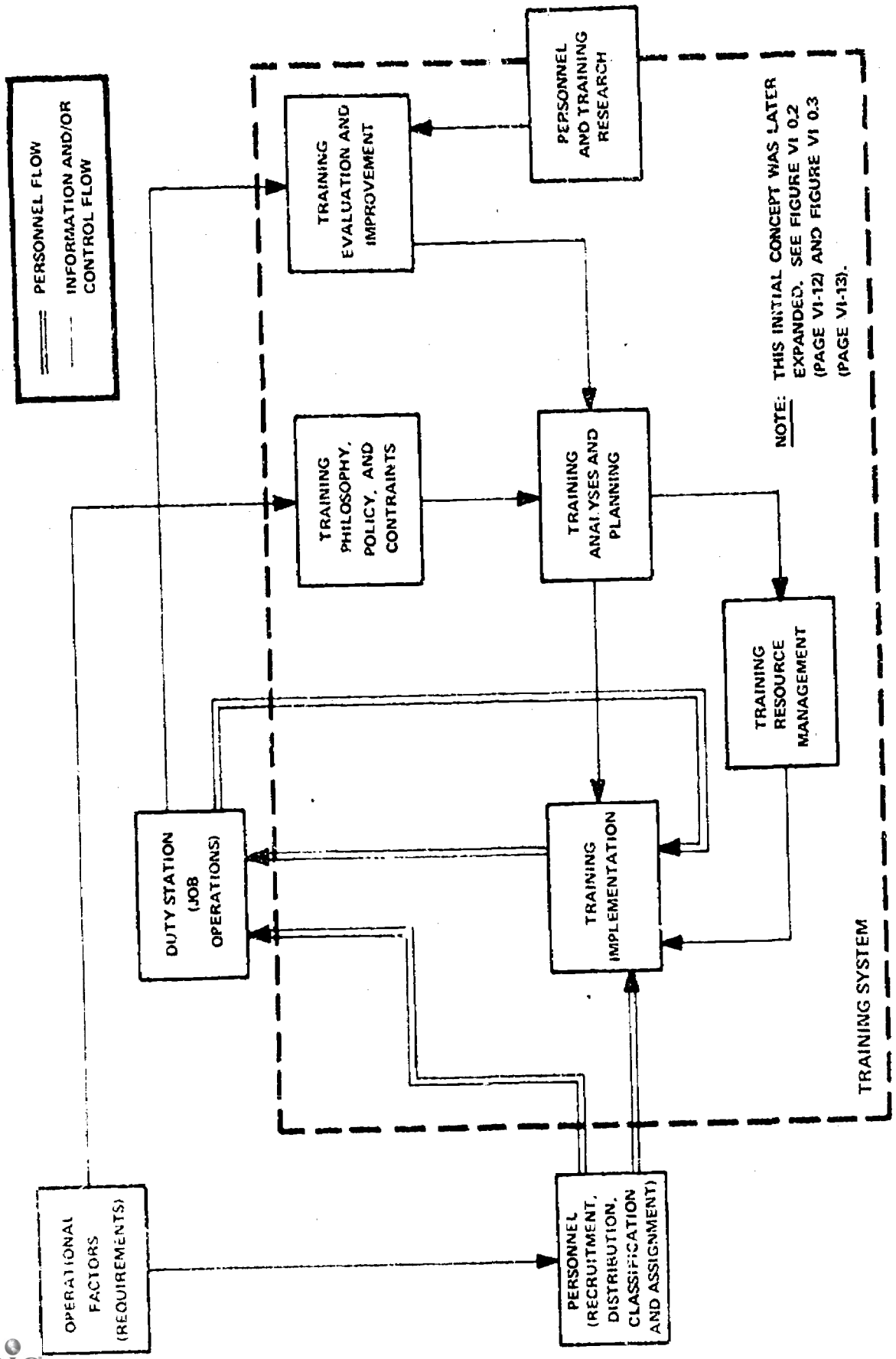

FIGURE III-1 CONCEPTUAL MODEL OF THE NAVAL EDUCATION AND TRAINING SYSTEM

dashed line belong to other commands or bureaus. In Figure III-1 wherever either personnel or information cross the dashed line an interface between the education and training system and some other system exists. There are some training activities which do not take place under control of CNET. These are enumerated in Paragraph III B.

Figure III-2 shows the top level command structure under the Chief of Naval Operations (CNO) and also indicates those functions which are part of the overall NETS but which are carried out by different organizations. With the exception of BUMED the interfaces between NETC and the other organizations correspond to the interfaces shown in Figure III-1.

NETC interfaces upward to CNO and laterally to the other commands and bureaus under CNO. The interfaces shown in Figure III-2 are as follows:

a. CNO/NETC. It is through this interface that operational requirements are translated into training requirements. The Director of Naval Education and Training (DNET) acting in a staff capacity to CNO provides planning and resource requirements for subsurface, surface and air. CNO also controls the enlisted rating structure and hence the levels and types of training services required.

b. Naval Materiel Command/NETC provides projected requirements for training to support new weapons systems or major procurements of new operational equipment. The interface exists primarily at the Training Plans Conference but some course curricula inputs are received from Ships Engineering Command.

c. BUPERS/NETC. Under direction from CNO, BUPERS provides quota control services for recruit training, basic school training ("A" schools) and advanced training ("B" and "C" schools). BUPERS also controls the number and, to the extent possible, the type of enlisted personnel input to the training system.

d. Fleet Commands/NETC. The Pacific and Atlantic Fleets interface with NETC via the Type Commands and Commanders for Training - Pacific and Atlantic. This is a complex interface and is shown in detail in Figure III-3. In some cases schools themselves are controlled by CNET.

In order to describe the NETS functionally, it was necessary for the study team to visit each of the organizations enumerated above. The functional system description required that those areas outside the domain of CNET be analyzed at least to the extent necessary to understand their impact on the training system itself.

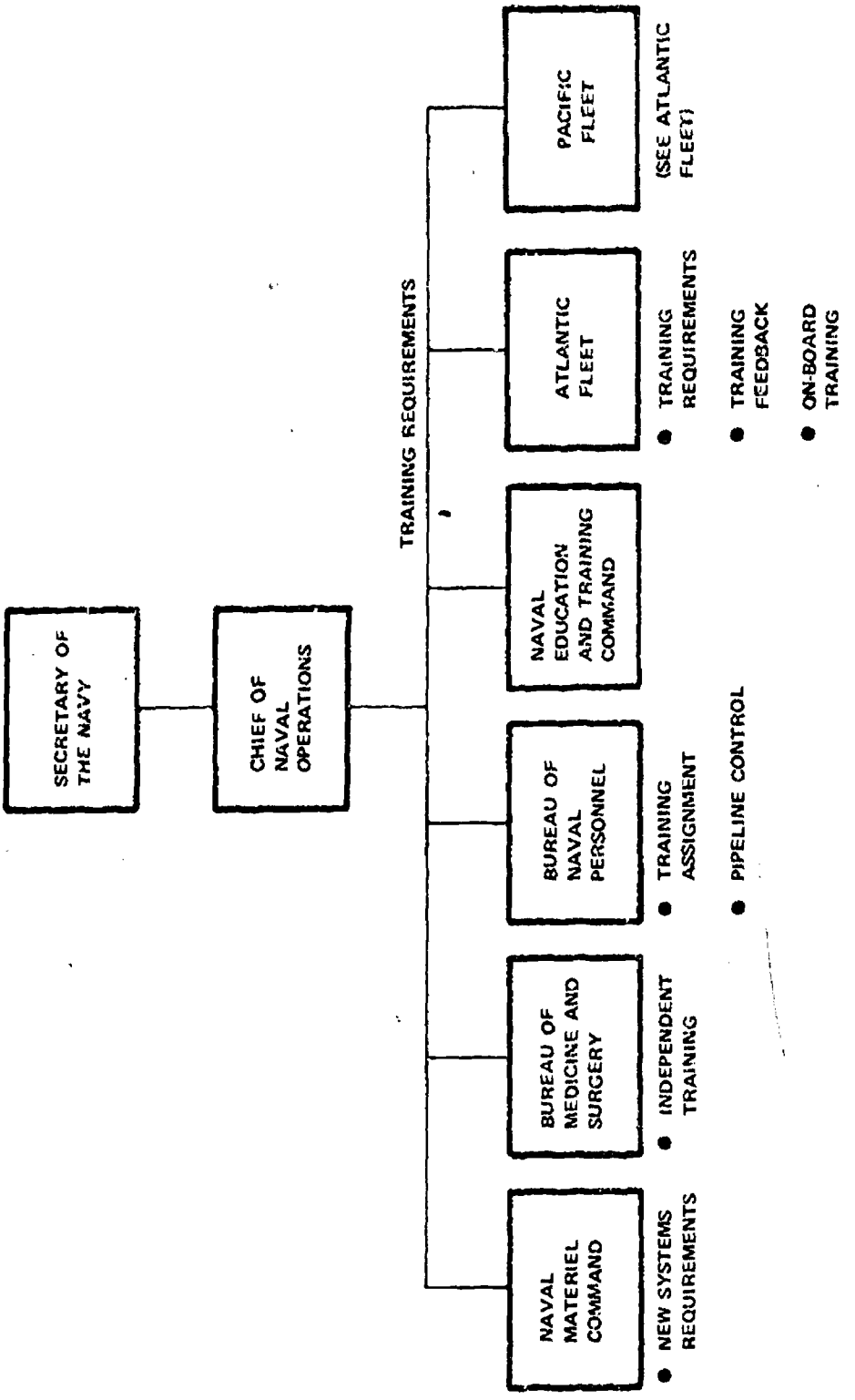

FIGURE III-2 TOP LEVEL COMMAND STRUCTURE

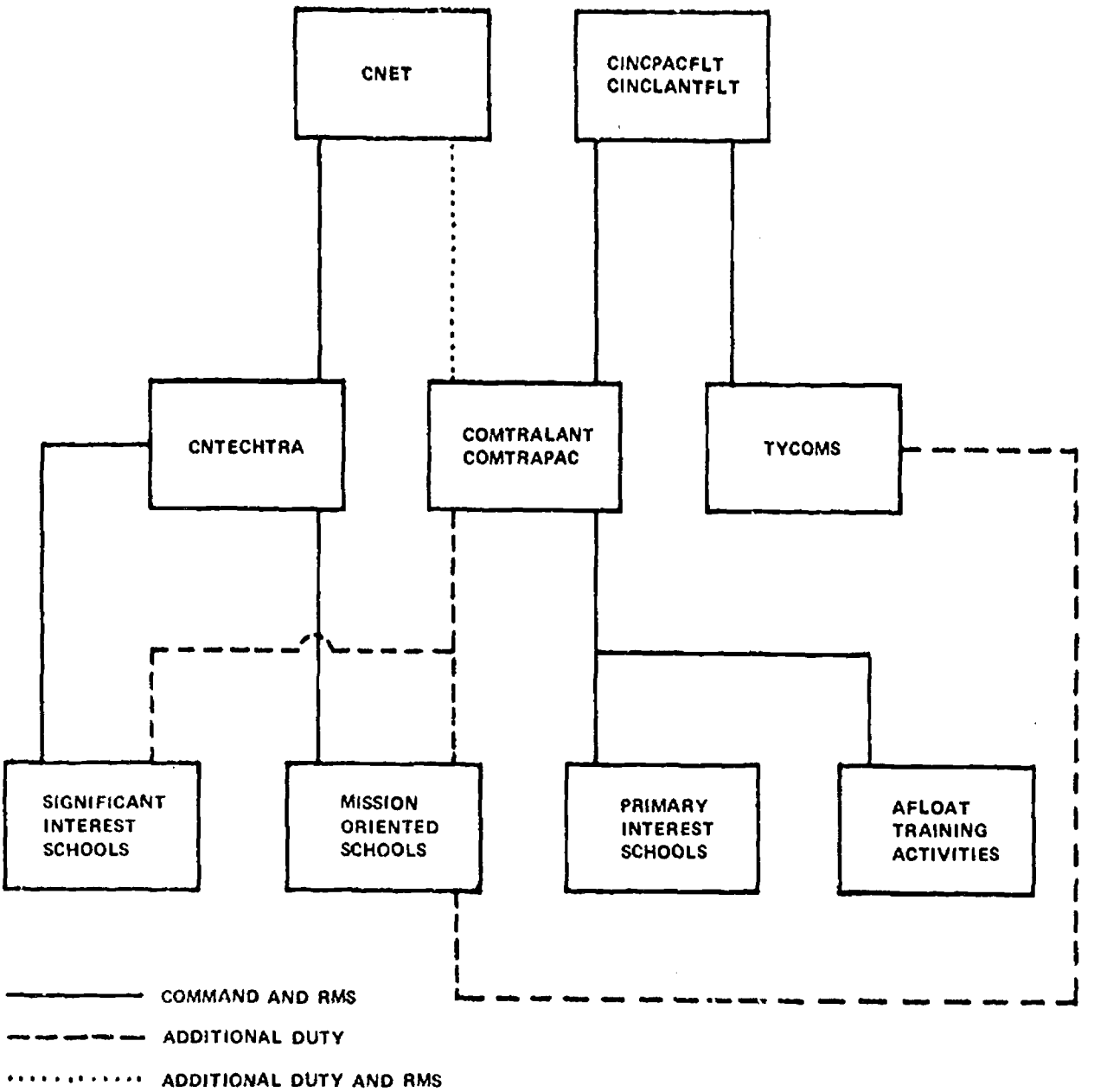

FIGURE III-3 ORGANIZATIONAL RELATIONSHIPS BETWEEN THE FLEET AND THE SINGLE NAVAL EDUCATION AND TRAINING COMMAND

B. ROLE OF NAVAL EDUCATION AND TRAINING COMMAND

The Chief of Naval Education and Training (CNET) heads all naval education and training programs except medical and some Fleet training. Included within this charter are: NROTC, the Naval Academy, the Naval War College, the Naval Post-Graduate School, and the Navy Campus for Achievement. The CNET charter includes the full range of training activities previously described in Paragraph III A.

However, as an organizational entity NETC contains representative samples of virtually all common types of training and education within the Navy so NETC became the hub of the study effort.

Given the resources available for this study it was necessary to select some parts of this diverse system for more intense investigation. It was possible to exclude certain areas from the outset of the study. Professional medical training is sufficiently specialized to warrant its own organization, therefore, it was eliminated as an area of concentration. Most officer training, with the exception of air officers, is too scattered geographically to permit formal description readily.

On the other hand, recruit and advanced enlisted training account for in excess of fifty percent of dollar expenditures for training with flight training accounting for an additional twenty-five percent. This reason alone would have been sufficient to warrant concentration in these areas but the number of personnel involved and the concentration of a number of training functions in a relatively small number of organizations also supported this selection.

Figure III-4 shows the primary functional commands under CNET. Of the five functional commands shown, COMTRALANT and COMTRAPAC can be considered functionally as the same type of organization (although differences do exist) and CHNAVTRASUPP does not deal directly with the conduct of training. Consequently, the primary thrust of the study could be directed at essentially three organizations: CNATRA, CNTECHTRA and COMTRALANT/PAC. The selected organizations are heavily training rather than education oriented and are more concerned (except for CNATRA) with enlisted, rather than officer personnel. However, given the cost factors plus the requirement outlined in Paragraph III-A-2 to study and describe training functions outside NETC it is unlikely that the scope of the study has been unnecessarily limited.

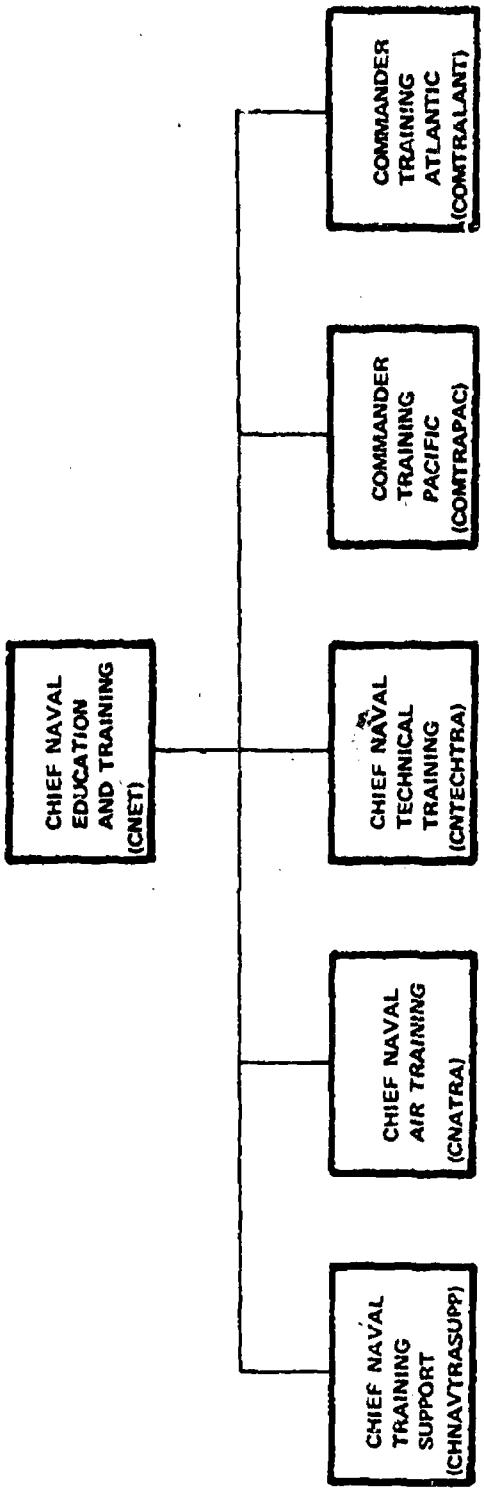

FIGURE III-4 CNET FUNCTIONAL COMMANDS

IV. OVERVIEW OF THE PHASES

A. STRATEGIC OBJECTIVE

In defining the objectives of Phase I, II and III, the strategic concerns and assumptions of the Naval Training and Education System were considered. A significant strategic thrust is directed towards providing NETS management with an expanded decision making capability for rapid and effective response to factors which influence the conduct of training. By application of advanced management systems techniques to the NETS program, significant increases in both efficiency and effectiveness are anticipated.

DOTS is a seed project with the composite intent of Phases I, II and III being to provide the definitions, descriptions, validations and recommendations leading to an integrated NETS management system.

B. PHASE I OVERVIEW

1. Objectives

Phase I provides the critical data base for Phases II and III, as well as any future activities pertinent to development of the NETS management system. The key objectives of Phase I are to:

a. Develop a comprehensive description of the current NETS covering its functions, lines of interaction between functions and the management and administrative procedures/processes controlling the system.

b. Develop a set of strategic assumptions describing the NETS environment of the 1980's. These assumptions are to provide hypotheses regarding significant social, military, educational, technological, etc., areas having substantial impact on NETS.

c. Based on the results of objectives a. and b., develop recommendations leading to, and a description of, an idealized future NETS in terms of the projected needs of the 1980's.

d. Develop a list of potential or existing computer based models that will enhance the NETS management decision making process. The "candidate" list will be supported by a data base including simulation techniques, model structuring techniques, and a survey of existing data bases and systems within NETS.

e. Develop a Management Support Plan for Phase II and III based directly on the Phase I findings. This plan will be designed to assist in effectively utilizing DOTS study resources and in meeting scheduled milestones.

2. General Comments

Although the major concern of the DOTS project is for the NETS management system, Phase I is intended to provide a data base and recommendations pertinent to all appropriate areas. The description of the system and the 1980's strategic assumptions should be definitive to a level that permits use by NETS as a "working" document beyond simply giving direction to Phases II and III. In any event, the Phase I definition and recommendations are essential to Phase II selection of computer models intended to significantly improve the NETS management decision making and planning process.

A detailed description of the approach used in achieving the Phase I objective is included in Section VI.

C. PHASE II OVERVIEW

1. Objectives

The output of Phase I includes, in addition to a definitive NETS description and general recommendations, a list of potential or existing computer models considered pertinent to assisting in the achievement of the strategic objective described in IV-A. Based on an assessment process, described in Section VII, the models were prioritized from the standpoint of scope and intensity of impact on the NETS decision making and planning process. Based on this output as well as all other parameters provided by Phase I, the objectives of Phase II are to:

a. Complete the assessment and evaluation of the candidate model list to assure that the list contains the most effective and definitive models pertinent to the NETS decision making and planning requirements.

b. Select a model or modeling subset from the candidate list. The model selected should be sufficiently representative to demonstrate the validity of the use of models on the training planning and management environment.

c. Design and develop the selected model(s) through coding and initial debugging.

d. Identify and, where necessary, develop the data required for testing and execution of the developed model(s).

e. Complete level 1 validation of the developed model(s). Level 1 validation consists of reasonableness testing, consistency testing, sensitivity testing, etc.

f. Design the on-site validation experiments to be conducted in Phase III.

g. Develop a set of recommendations directed towards the future implications of model application and systems analysis to NETS. These recommendations will be directed toward estimating requirements for producing a NETS integrated operational system in terms of hardware, software, personnel, subsystems, data bases, etc.

2. General Comments

Although Phase II is primarily concerned with the application of mathematical modeling to predictive planning, its recommendations are not restricted, and, if appropriate, may include other tools of management systems. It is intended that, after verification during Phase III, the model(s) developed and validated during Phase II will be implementable as an operational instrument within NETS.

D. PHASE III OVERVIEW

1. Objectives

The primary inputs to Phase III are the developed and validated model(s), and the design for final experimental model verification. The objectives of Phase III are to:

a. Verify the Phase II model(s) based on tests using digital simulation to exercise the model with the variables defined in Phase II and using real-world data.

b. Provide a viable, productive and implementable modeling tool permitting NETS to effect cost and/or quality improvements.

c. Validate the recommendations of Phase II through extrapolation of Phase III experimental conclusions.

d. Define recommendations that will permit future inclusion by NETS of new parameters, evolving from future educational and management research efforts, into the Phase III model(s).

e. Define procedures permitting additional testing of the Phase III model(s) by NETS.

2. General Comments

The recommendations of Phase I, II and III are closely interrelated although each has some recommendations not directly impacting the other two phases. As was previously stated, the net resultant

should provide NETS with the guidance required to precisely define the additional projects required to achieve its goal of a fully integrated management system.

V. INTRODUCTION TO PHASE I

A. FUNCTIONAL FLOW OF CURRENT SYSTEM

The functional flow of the current Naval Education and Training System (NETS) is presented through a series of flow diagrams graphically portraying the various NETS functions and defining their interrelationships. Descriptive text is provided where flow annotation is insufficient for clear understanding, or where expansion is required.

Problem areas and technological gaps in the current system are detailed in specific sections.

B. IDEALIZED APPROACH

An idealization based on the environment of the 1980's, is defined primarily through text and to a limited degree through additional flows. Most recommendations evolving from Phase I concern the improvement of existing functions as opposed to major reorganizations of functional interrelationships. Both the current and idealized approaches are contained in Section VI for each NETS function.

Although defined in terms of the 1980's, many of the recommended improvements are equally applicable to the current environment.

C. ASSUMPTIONS AND VARIABLES

To define the idealized NETS system, the problems, gaps and current functional flows were assessed against a data base consisting of:

1. Assumptions and variables derived from the Phase I trips, interviews and documentation reviews.

2. A set of strategic assumptions pertinent to the environment of the next twenty-five years. These assumptions were developed based on a number of strategic documents and from contributions of the IBM Advisory group.

The working assumptions evolved from this assessment are defined in Section VI. The strategic assumptions are presented in Appendix A.

D. TECHNOLOGICAL DATA BASE

The technological data base is essentially a listing of sources, models, simulation techniques, data bases, etc., evolving from the Phase I effort. This listing is contained in Appendix B.

E. CANDIDATE MODEL LIST

The candidate list of potential computer models was developed from an assessment of the Phase I NETS functional definition, assumptions, gaps and recommendations. In addition, data was provided by interviews conducted by systems analysts in parallel with those being accomplished to provide a data base for the functional description.

Following the list development a procedure was developed and applied to the prioritization of the candidate list. The prioritized list, the procedure leading to prioritization, and model descriptions and selection rationale are provided in Section VII.

VI. DESCRIPTIVE FUNCTIONAL MODEL OF THE NAVAL EDUCATION AND TRAINING SYSTEM

A. INTRODUCTION

The previous section described the key objectives for the Design of Training Systems (DOTS) Phase I effort. The objectives included the preparation of a descriptive functional model of naval education and training as it currently exists, the delineation of assumptions that would be relevant to naval education and training in the 1980's, and the definition of an improved system which would more appropriately meet the needs of naval education and training in that time frame. Within the context of these objectives, this section presents the major functional elements of the current system. Then, on the basis of observed gaps in the system and of certain assumptions about the future, recommendations for creating a more cost-effective system are set forth.

B. OBJECTIVES

The objectives for this part of the Phase I effort are outlined below.

1. Preparation of a Descriptive Functional Model

There are many different kinds of models which serve different purposes in analysis, management, and research. A model can range from a series of tasks and decisions interconnected and described in some symbolic art-form to a complex system of equations interrelated and depicted in mathematical form. The latter model is more easily computerized for rapid solution of highly complex problems. The former model has general utility as a management tool, for gaining an understanding of the functional elements and interrelationships of a complex system, and for assisting in making selective improvements to that system. This management application is the basis on which the descriptive functional model presented in this section was developed.

2. Limiting the Scope of Investigation to a Manageable Size

The Navy is continually training to maintain a state of military readiness. Consequently, virtually every aspect of naval operations contains an element of training. However, time constraints did not allow a complete coverage of every training situation. Therefore, a general "sampling" approach to the analysis was made. The primary focus was the Naval Education and Training Command. Even though the major concentration of information gathering was within this command, data were collected from a great many other sources which are considered integral to the functional design of naval education and training. Among

these other sources were activities within the Fleets, Bureau of Naval Personnel, Naval Materiel Command, Navy Recruiting Command, Bureau of Medicine and Surgery, Office of the Chief of Naval Operations, and Office of Naval Research. These organizations are important in this study to the extent that they perform functions related to the training system. This will become apparent as the functional description is reviewed.

3. Delineating Gaps and Problems in the Current System

There were two major reasons for conducting extensive inquiry into current and potential problems within the Naval Education and Training System (NETS). One reason was to help define areas where the application of computerized models would be of substantial benefit. The other was to identify areas where technological, functional, or operational improvements could be made. As previously mentioned idealized functional descriptions have been formulated to assist in the solution of these observed gaps. Those alternatives are oriented toward the 1980 time frame.

4. Highlighting Areas/Approaches Which Could be Improved

The identification of existing gaps in the Naval Education and Training System, coupled with certain assumptions about trends in areas/factors which can be expected to influence this system, was the basis for the conclusions and recommendations included in this section. Important to understanding the system is the fact that relatively few operations which might be prescribed for an ideal system are totally absent in the current system. For this reason, the original objective of developing two separate descriptive functional models (one of the current system and another of the idealized system) would have led to needless repetition in the functional flows. In reality, the major differences between the two systems will be in the scope of application and in the degree of effectiveness with which an existing function is carried out. This factor elevates the importance of the individual functional discussions where potential areas of improvement are highlighted.

C. ANALYTICAL APPROACH

The analytical approach taken to achieve the objectives outlined above is described as follows:

1. Field Visits

A series of visits to activities both within and outside the Naval Education and Training Command accounted for a substantial portion of the data collection effort. An initial visit to the Chief of Naval Education and Training (CNET) headquarters in Pensacola, Florida, helped to establish a general frame of

reference for the analytical effort to follow. Subsequent visits were scheduled at each of the functional commands reporting to CNET (CNTECHTRA, CNATRA, COMTRAPAC, COMTRALANT, and CHNAVTRASUPP), at over 30 activities within these functional commands, and at over 20 additional training related activities within the Navy. A complete list of those activities visited is contained in Appendix D. Repeat visits were scheduled at each of the functional commands to obtain additional data. The final visit was a return to Pensacola which culminated in interviews with Vice Admiral Malcolm Cagle (CNET), his Principal Civilian Advisor, Dr. William Maloy, and other key personnel. The data collection was structured in the following manner.

a. Methodology

Interview outlines were prepared to guide the questioning process. Generally a single analyst conducted the questioning of an individual, however, there were a number of exceptions to this procedure. The interviewed individual was given a brief review of the project, its purpose, and the manner in which the investigation was being conducted. Every effort was made to insure that the individual understood the functional, rather than organizational, focus of the project. The idea of functional was conveyed, primarily, by means of a conceptual functional model (Figure III-1). The result was a high percentage of rather frank expositions of the data required. While the original interviewed individuals were selected according to a review of missions and recommendations of the working group, many of the subsequent interviews resulted from a need to follow up on a particular point expressed in a previous interview.

b. Kinds of Data Gathered

The data gathering focused upon:

1) Identifying the major functions of training,

2) Determining the important characteristics of these functions such as:

   a) Major inputs

   b) Major outputs

   c) Significant process steps

   d) Schedules

   e) Interfaces and coordination needs

   f) Problem areas

3) Classifying the functions into major functional categories

4) Identifying important interrelationships between functional and subfunctional elements

5) Identifying problem areas which detract from effective functional operation.

The objective of the functionally directed method of inquiry was to derive a data base for preparation of the descriptive functional model of the current Naval Education and Training System.

2. Review of Naval Instructions, Reports, and Miscellaneous Documentation

A number of instructions related to the mission of naval training was requested for review at the outset of Phase I. Unfortunately, many were not available to prepare for the initial data gathering visits in the most effective manner. However, many of these documents were obtained from the locations visited. Several reports such as "The Naval Training Command, A Report by the Naval Training Command Board," and "The Naval Training Command Executive Staff Studies" were available early in the project to assist in formulating the data gathering and general project approach.

Literature searches were made through major information retrieval systems both within and outside of IBM. A substantial number of significant reports and other documents were obtained in this manner. The various reports, instructions, and other documentation provided very useful reference in the development of the descriptive functional model. They were used as a framework for guiding the organization of the data mass collected during the field visits.

3. Functional Flows

The primary means of depicting the Naval Education and Training System is through a series of functional flow diagrams.

a. Organization of Flows

The functional flows are grouped in terms of the major functions of the education and training system. The functions are generally the same as those originally conceptualized and shown in Figure III-1, however, some additions, deletions, and name modifications have been made. These functions are:

- Develop Training Requirements
- Coordinate and Control Planning
- Analyze and Plan Training
- Implement Training
- Evaluate Performance (Feedback)
- Manage Training Resources
- Perform Training Research
- Support Training

Within any one functional category; e.g., Manage Training Resources, a systematic exposition of the functional elements (subfunctions) is achieved by exploding the functions to greater levels of detail. Each major functional category is organized in the following manner:

1) Definition. This introduces the function, defining its scope and major characteristics.

2) Description. The description consists primarily of a written explanation of the function, a functional flow showing the first level of breakdown within the function, and an outline of subfunctions, sub-sub-functions, etc., down to the most detailed functional unit (tasks) contained within the functional flows.

3) Current system. This section contains all of the sub-flows for each major functional category within the current NETS. Where appropriate, discussions are included at the subflow level.

4) Summary of major problems/gaps. This section summarizes the problems and gaps identified in the current Naval Education and Training System as related to the specific functional category being described. Only the must important problems and gaps are identified at this level. Such problems/gaps emerged as a result of observing or encountering the situation at a number of different locations. Several of the same types of problems were specifically mentioned by virtually every location visited. Other kinds of problems were developed as an outcome of analyzing the reasons for commonly observed problems and difficulties.

5) Idealized system. This section provides recommendations for increasing the cost-effectiveness of the NETS. These take the form of specific statements of needs/objectives, and where appropriate include suggestions on methods of achieving these goals. Recommendations are based on problem areas and functional elements that require improvement, as well as on assumptions about the 1980's. Originally this was conceptualized as a separate model, however, the analysis showed that very few functional elements necessary for an effective future system were missing in the existing system. The major area for potential improvement was in the effectiveness with which a certain function was carried out or in the degree to which it was applied in different organizational contexts. For this reason, this section will be primarily analytical. Separate flows are produced only where a new functional element must be included or where a different functional arrangement might be more effective.

b. Characteristics of Levels

Each succeeding subdivision of a function provides greater detail on the composition of the function. It also identifies functional interrelationships which are only generally apparent at the higher levels of aggregation. There was no intent to detail any function down to the procedural (how to do) level. The functional breakdowns are intended to describe what takes place, how activities relate to each other, and the interfaces extending beyond the NETS. In some cases, an additional more detailed level of breakdown would result in a procedural description; in others, three or four more subdivisions might be necessary before the procedural level is reached.

c. Annotation Methodology

Each major functional category is designated by a number; e.g., 1.0 for Develop Training Requirements, 4.0 for Implement Training, etc. Functional elements at the first level of subdivision would be designated 1.1, 1.2, 4.1, etc. For each further subdivision of a functional element, an additional number is added; e.g., 4.1.1, 4.1.2, 4.1.2.1, 4.1.2.1.1, etc.

Functional activities may be accomplished either manually (Manual Activity), automatically (Computer Activity), or in some combination (Manual/Computer Activity). Differently formatted symbology is used to define these various activities.

Knowledge of the decision elements within a system is important to understanding the system. Therefore, separate symbology is used to show manual as well as computer assisted decisions.

For a function to operate effectively, a number of other functions may have had to be performed in advance. Logic symbology, therefore, is introduced to clarify functional interrelationships that depend upon certain combinations of activities/events.

Alternate or new functions proposed for the idealized version of the NETS have been uniquely identified, and the modified flow diagrams have been interspersed with those of the existing system's description. A function which is believed not to exist in the current system has an "N" (for New) preceding its number, and an "A" following it. If the function already exists in the current system, but a modification is recommended in the idealized system, the current number will be appended with an "A".

A detailed key to the symbology used is shown in Figures VI 0.0 and 0.1. Note that minimal symbols are used. The aim was to avoid flow diagrams which require a programmer background.

d. Elaborative Notes

The functional flows in themselves, provide a fairly comprehensive picture of the NETS. However, since further clarification was considered necessary in certain instances, notes have been integrated into the flows as required.

D. GENERALIZED FUNCTIONAL DESCRIPTION AND ANALYSIS OF NAVAL EDUCATION AND TRAINING

1. Overview of the Current System

In most respects the functional elements of naval education and training resemble those to be found in any education and training system. A technical subsystem carries requirements from the development stage to the implementation stage and through to the evaluation stage. A resource subsystem tracks the operations to fulfill these requirements through each stage. These two basic subsystems operate together for the purpose of regulating the flow of students through the education and training system. Thus, the similarities with other education and training systems are quite apparent. The purpose of this section is to provide a more specific description of that system which operates to control the flow of students within the Navy.

A primary consideration in describing naval education and training is its relationship with the overall "Navy System." In effect it is a system within a system and this fact accounts for many of the characteristics which make education and training within the Navy unique, at least when contrasted with the academic and industrial

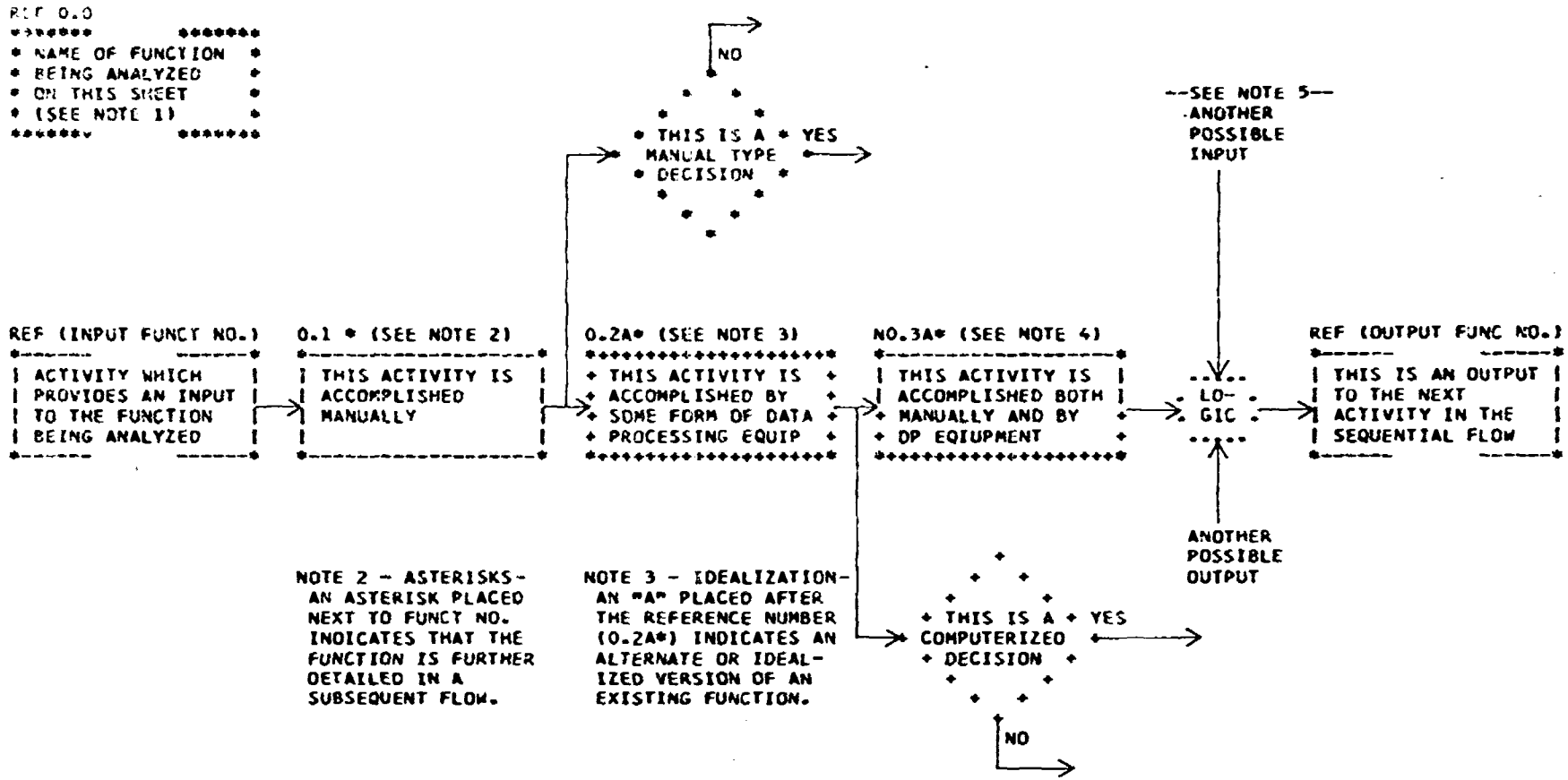

NOTE 2 - ASTERISKS- AN ASTERISK PLACED NEXT TO FUNCT NO. INDICATES THAT THE FUNCTION IS FURTHER DETAILED IN A SUBSEQUENT FLOW.

NOTE 3 - IDEALIZATION- AN "A" PLACED AFTER THE REFERENCE NUMBER (0.2A*) INDICATES AN ALTERNATE OR IDEALIZED VERSION OF AN EXISTING FUNCTION.

NOTE 1 - FUNCT NAME- A FUNCTION NAME BLOCK WILL BE PLACED IN THE UPPER LEFT CORNER OF EACH FLOW AND THE FIGURE WILL BE TITLED THE SAME.

NOTE 4 - NEW FUNCTION- AN "N" PLACED BEFORE THE REFERENCE NUMBER (NO.3A*) INDICATES A NEW FUNCTION WHICH WAS NOT OBSERVED IN THE CURRENT NETS.

NOTE 5 - LOGIC- LOGIC ELEMENTS CAN BE AND'S, OR'S, OR AND/OR'S. THESE ARE FURTHER EXPLAINED IN FIGURE VI 0.1.

FIGURE VI 0.0-FUNCTIONAL FLOW SYMBOLOGY

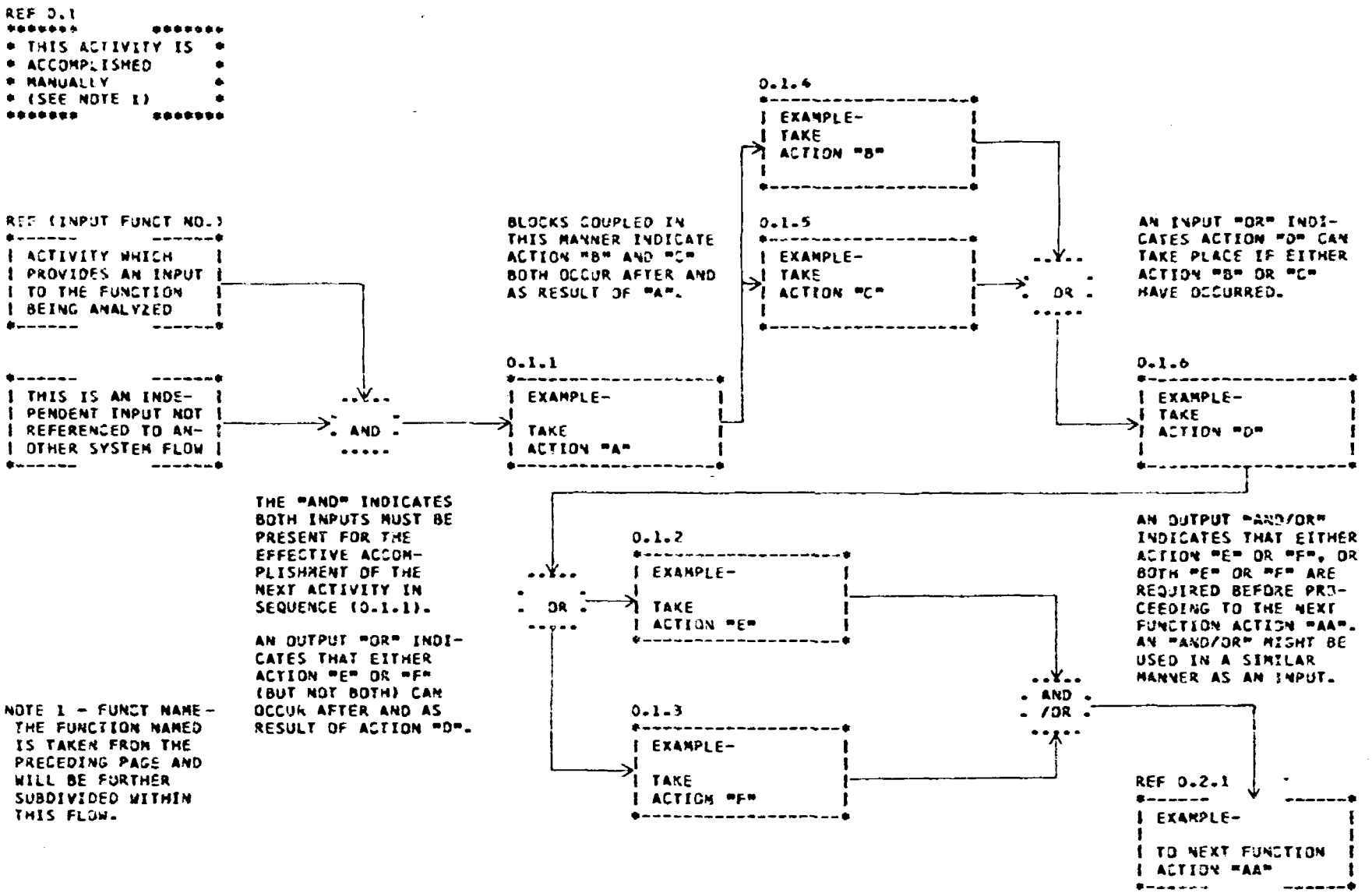

FIGURE VI 0.1-FUNCTIONAL FLOW SYMBOLOGY

systems. It is the nature of the overall Navy System (which takes its character from higher level systems such as military, defense, government, and political), that tends to shape the character of the NETS.

The personnel, materiel, recruiting, operational (Fleet) and resource areas are primary interfaces with the NETS. The description of the current system, the identification of some of the major problems/gaps, the assumptions made relevant to the 1980 time frame, and the recommendations which form the basis for system idealization must consider the contextual relationship of the NETS to the overall Navy system.

The personnel system drives training in two major ways: (1) it promotes the need for occupationally oriented training found in the "A" schools, and (2) it influences the availability and quality of training-staff personnel.

The materiel system drives training by the way that it procures new weapons systems and by the way that it handles subsequent modifications and retrofits. The procedural and operational relationship of the materiel system to contractors has a heavy influence on training.

Recruiting determines both the profile of new student inputs to recruit training and to some extent influences the need to provide additional occupationally oriented schools for reenlistees ("B" schools).

The operational system is a continual driving force in terms of recurring training needs (numbers of students) and in terms of tactics/doctrine/operational changes as they might modify course content. The impact of resources and the resource management system are similarly pervasive forces within the NETS. One of the basic requirements for coordination and control (management) stems from the fact that the available resources are almost always less than those desired.

Another factor to consider is the very mass of the Navy System. Many of the problems observed are a direct result of the overall system's inertia. This is especially true in terms of obtaining personnel to handle training requirements which have not been well defined in the planning/programming cycle. Many of these types of requirements are for the purpose of improving cost-effectiveness, therefore, lack of flexibility results in excess resource usage.

The specific functions and functional interrelationships observed in the data collection and analysis phase of the study are shown in Figure VI 0.2 - Naval Education and Training System (Informa-

tion and Control) and Figure VI 0.3 - Naval Education and Training System (Personnel/Trainee Flow). Two additional major functional areas were identified during the study which were not a part of the original conceptual model (used as a framework for the data collection, Figure III-1).

The function, Coordinate and Control Training, recognizes management as a separate and distinguishable area. A number of individuals perform this function as the major part of their job, others perform it in a much lesser capacity. Nevertheless, it is a necessary and primary function for achieving the desired level of operational effectiveness.

Another function, Support Training, has been separately identified, again, because of its importance to the effective operation of the total NETS.

In summary, the current NETS is composed of a primary technical subsystem which has significant interfaces with other major components of the entire Navy System. The main components of this subsystem are (1) the development of training requirements, (2) the analysis and planning of training, (3) the implementation of training, and (4) the evaluation of performance. The function of training support primarily augments the training implementation function. Another major function within the technical subsystem is training research. This function is coupled with performance evaluation in terms of research results which improve evaluation methods, and is tied to the training support function in terms of research results which lead to improved training technology. The management of the system is described through the function of coordination and control which has its primary influence on the function of training analysis and planning. Finally, the training resource management subsystem is primarily concerned with defining the resources required to accomplish training plans so that they can be implemented effectively; and secondly, with controlling the expenditure of resources once they have been allocated.

A number of specific problems are identified within the individual functional descriptions and analyses which follow. These can be summarized into four major areas:

a. Interface Problems

This class of problems relates to training difficulties which arise because adequate communication, coordination, liaison, or other interrelationships with areas both in and outside of the NETS have not been well defined or implemented.

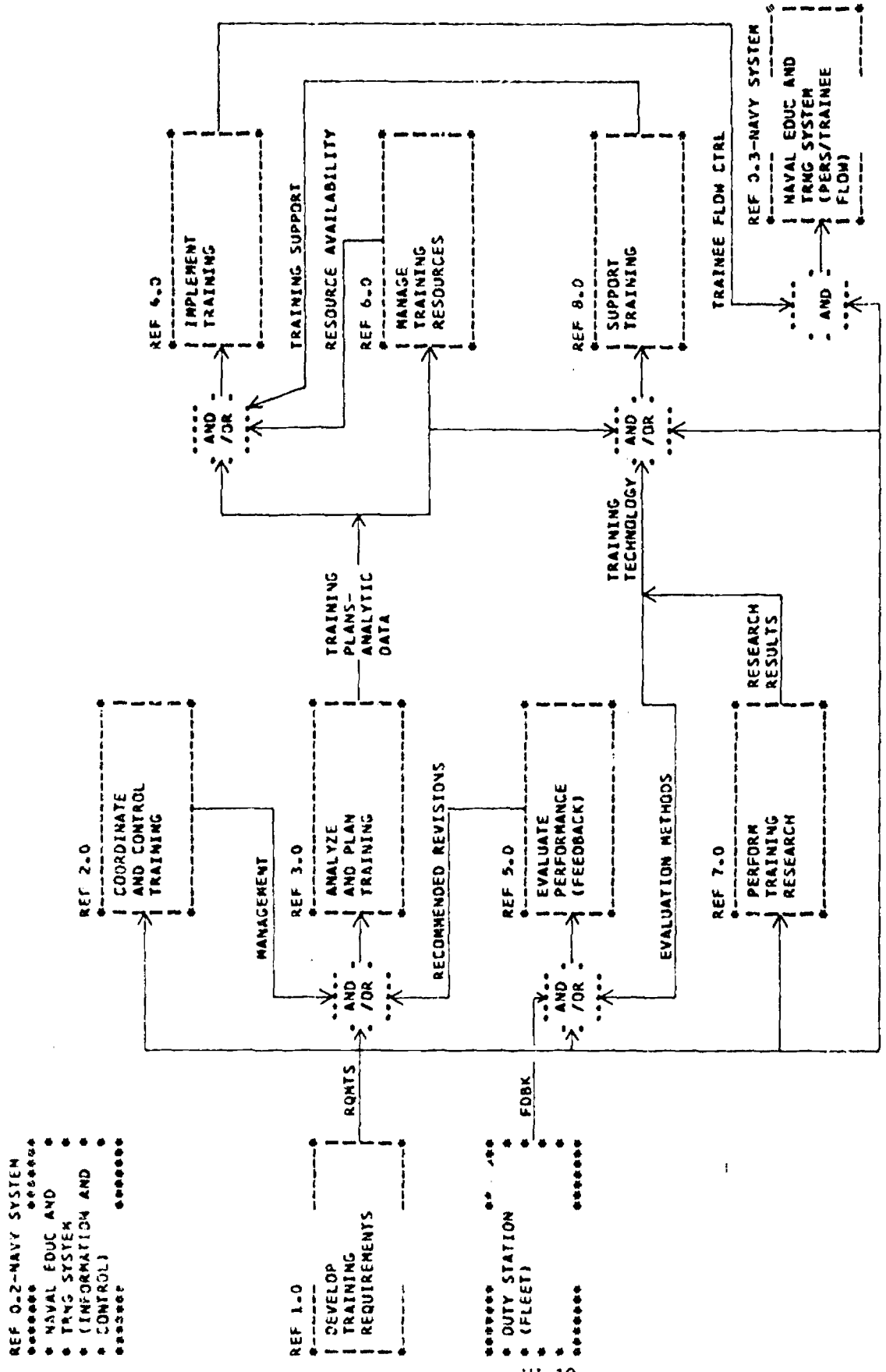

FIGURE VI 0.2-NAVAL EDUCATION AND TRAINING SYSTEM (INFORMATION AND CONTROL)

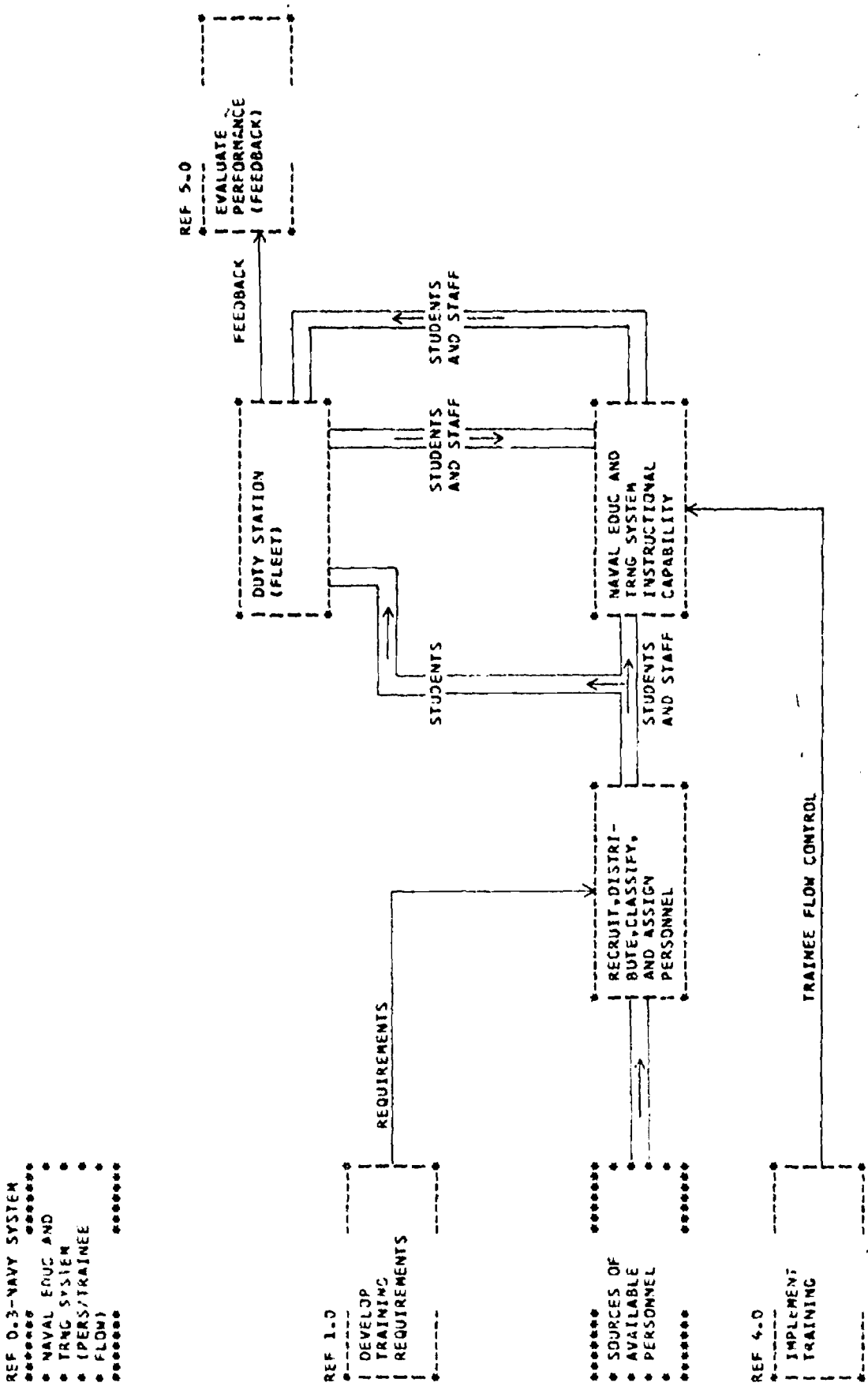

FIGURE VI 0.3-NAVAL EDUCATION AND TRAINING SYSTEM (PERSONNEL/TRAINEE FLOW)

Examples of interface type problems are:

1) The right people not attending a NTPC.

2) The existence of different bases for training and job advancement.

3) Ineffective trade-off analyses between equipment design, the personnel assigned to operate/maintain the equipment, and the training program.

4) Inadequate definition of training research requirements to the research laboratories.

5) The redesign of feedback methodology by multiple training activities.

6) Inadequate definition of Shore Establishment Relocation (SER) impacts on remaining training activities.

7) Course length and content being different at different training locations.

b. Personnel Problems

This class of problems relates to training difficulties stemming from inadequate selection, assignment, or development of staff or student personnel within the NETS.

Examples of personnel type problems are:

1) Assignment of some poorly qualified (promotional risks) personnel to management within the training system.

2) Maintaining continuity of effort in key areas in the face of frequent personnel rotation.

3) Orienting training to the specific billet (job) requirements.

4) Obtaining skilled manpower to accomplish important R&D studies related to improving training effectiveness.

5) Obtaining an accurate match between the amount and type of training and the requirements of the job.

c. Information Problems

This class of problems is related to deficiencies in appropriate data for making sound decisions with regard to training.

Examples of information type problems are:

1) Inaccurate and varied data from multiple sources.

2) Difficulties in accurately projecting "C" school requirements because of NEC data base.

3) Inconsistencies or total lack of time distribution data at the level of detail required for cost allocation.

4) Inadequate definition of certain terms such as "average on board" or "school."

5) Ineffective task analytic data available for definition of course content.

6) Insufficient technical data base for decisions to reduce or eliminate courses.

7) Inadequate data base on which to systematically develop an integrated long-range training plan through all command echelons.

d. Resource Problems

This class of problems is associated with training difficulties which arise because resources are not available at the right time, in the right place, or in sufficient amounts.

Examples of resource type problems are:

1) Insufficient PCS funds to accomplish cost-effectiveness programs.

2) Inadequate definition of implementation costs for proposed projects.

3) Obtaining timely detailing of personnel to accomplish unplanned, cost-effective projects.

4) Difficulties in assigning priorities to requirements needing resources.

5) Obtaining adequate software support for training devices.

6) Obtaining reasonable match between the technical and resource requirements of a program or project; e.g., Civilian Substitution Program (CIVSUB).

It must be emphasized that these are generalized system's problems which are not aimed at any one organization, but are present in the totality of the NETS. Any of the problem areas covered here and in the discussions for each function must be viewed in a total context by each organization to see to what extent the problem pertains.

2. Strategic Working Assumptions Expected to Influence the Education and Training System of the 1980's

The recommendations contained in this report are pertinent to the current Naval Education and Training System and are also intended to address the needs of the 1980's. This section contains a set of Strategic Working Assumptions (SWA) forming the predictive assumption base considered in developing the tactical assumptions and recommendations of the functions to follow.

The SWA's represent a synthesis of a more complex set of Strategic Assumptions (SA). To reduce the complexity of Section VI and permit emphasis on the two key objectives of definition and recommendation, the strategic process definition, Strategic Assumption Charts, and SA Interaction Charts are contained in Appendix A. The Interaction Charts permit a direct correlation of the synthesized SWA's to the more detailed SA's. The SWA's represent the key futuristic environmental definitions impacting the NETS of the 1980's. The following points are essential to an understanding of their use in this report:

a. The SWA's are based on SA's fixed at a point in time and should be considered transitory. No strategic process is valid that does not provide for frequent reassessment of its assumptions.

b. The tactical assumptions and recommendations of the Section VI functions are intended to support the strategic direction implied by the SWA's but also consider other parameters. Therefore, there is no one-to-one correlation of SWA's to the tactical elements of the functions.

c. The strategic process and SA's of Appendix A should be considered as the starting point for a NETS strategic process and not as a final definitive document. It does provide the rationale for the SWA's essential to this project.

d. The SA, SWA and Tactical Assumption approach was incorporated to permit a logical flow from a complex set of futuristic interactive assumptions to the lower level of tactical recommendations.

The Strategic Assumptions are divided into the significant categories of Demography, Philosophical, Bio-Medical, Social/Cultural, Communications, Education, International, National, Domestic Institutions, Technological, Military Doctrine, and Naval Factors. Only those SA's felt to have some significance to NETS were developed. Obviously, they could be expanded under the above categories to support functions other than education or training.

The Strategic Working Assumptions synthesized from the SA's based on their pertinence to NETS represent an additional step in organization evolving from the SA categories. The resultant provided practical guidance to recommendation development.

The major SWA divisions pertinent to NETS are:

- o Resource control
- o Resource distribution
- o Human resource
- o Organization
- o Process

Refer to Appendix A, Section II D, Page 87, Strategic Assumption Structure, for the networks linking each Strategic Assumption to the key driving Strategic Assumptions.

SWA statements and supporting comments are:

a. Resource Control

Statement

A confluence of factors will result in a significant reduction in the resources available to accomplish the NETS training mission. Although a current concern, the degree and scope of resource restriction will become increasingly severe through the mid-1980's and will result in major changes to the NETS resource control approach and structure.

Comments

Economic necessity will dictate a reduction in the total resources required to accomplish the training mission as well as a reduction in the unit cost of training for any

given task. All command levels of NETS will experience increasing levels of inquiry and control from higher government sources. The following change statements are pertinent to this reduced resource availability:

1) There will be an increased capability for cost effectiveness quantification, measurement and control.

2) More systematic and comprehensive cost justification methods, techniques, programs, etc., will be developed and implemented.

3) There will be an improved capability for marginal cost identification.

4) Increased application of computer technology will result in a need for more uniform and consistent data bases.

b. Resource Distribution

Statement

The projected combination of restricted resources, technological change, national doctrine, and military strategy will result in a major change in the traditional distribution of resources across the military services and, also, across the various commands and functions of any given service. The impact on NETS will be substantial since its mission is driven by most of the other functions within the Navy.

Comments

At the service level, increased mission sharing or consolidation will become desirable and essential to the maintenance of national doctrine and fulfillment of military doctrine. Technologically, the need and potential for the optimization of the various technical functions will mandate shifts in resource utilization that will influence NETS. Pertinent change statements are:

1) Significantly increased interservice sharing of training resources will become a major factor.

2) Increased uniformity between training locations within a service or between services will be achieved and controlled.

3) Improvement in the planning process will result in optimal distribution of training modes within the total training system. This will result in a trend to more

on-board training based on self-study modes. Self-study encompasses all forms from relatively unstructured training sequences to Computer Assisted Instruction (CAI).

4) There will be an improved capability to optimize resource distribution through appropriate trade-off's between personnel, equipment design, and training factors.

c. Human Resource Management and Accounting

Statement

The average recruit entering the military service in the 1980's will have been influenced by the changes in national culture, attitudes and the total pre-service education process. The changes resulting from these influences combined with the changing requirements of the services will necessitate changes in the management of human resources, especially in those areas leading to a trained and motivated person capable of fulfilling his designated mission.

Comments

Since the assumption of decreased resources implies fewer people to accomplish a specific mission, it is imperative that the utilization of human resources becomes more efficient and that future changes in personnel profiles be considered in designing the NETS of the 1980's. The steps leading to improved human resource management and associated accounting will support changes projected in the NETS. Pertinent change statements are:

1) There will be a need for increased emphasis on attitude shaping. Also, behavior modification will be required in those key areas where a compromise between Navy needs and individual characteristics, goals, or motivations cannot be made. For example, a recruit conditioned by his or her pre-service experience in an individualized training environment, permitting maximum freedom of subject and objective selection, may have difficulty in accepting a set of optimized objectives that are mandated.

2) The All Volunteer Force (AVF) has already resulted in recruit profile modifications. These changes will continue to be felt through the 1980's due to the continuing input of new recruits and the extended influence of the AVF recruit coming aboard today.

3) The resultant of a need to maintain force strength through the AVF, to adjust to a changed recruit profile, to accomplish missions efficiently, and to capitalize on more

efficient training approaches will be a major revision, or revisions, to the Navy occupational structure prior to the mid-1980's. A much closer match between career and billet needs (job performance requirements) will be achieved with career growth taking place within a well defined but flexibly structured framework.

4) Computer technology will be applied to the inventory maintenance of individual capabilities and training, and to the subsequent use of these data in meeting mission, training, and career needs.

   The need for this capability will become more essential to NETS as the individualization of instruction increases.

d. Organization

Statement

Inter-service cooperation and consolidation of the training function, increased need for precise control of training resources, a need for human resource accounting, the thrust towards instructional modes requiring highly systematized and disciplined development, and a shift to more on-board training will result in a NETS exercising strong centralized control over all Navy education and training by the mid-1980's. This statement is predicated on the attempted implementation of similar changes by other organizations lacking strong elements of central control. Increased control will be mandatory if the education/training mission is to be accomplished as currently planned.

Comments

Although prior statements imply a significantly increased level of training system control, the development of the required organization to accomplish this change is so critical to the future achievement of objectives it is included as a separate statement. The thrust towards a higher degree of centralization and control of the total military training process will be given impetus by the following change statements:

1) There will be an organizational structure and process enabling precise fiscal measurement and control of the entire military training process by the mid 1980's. It is probable that the present concept of separate education/training functions for each service will remain but this does not preclude the degree of reorganization required to achieve this postulate.

2) The capability of measuring actual job performance and of relating it to the training process will be developed by the mid 1980's. This will assist in reducing the true cost of training and will make command accountability both possible and desirable. The complexity of the measurement process, the need for consistency, and the desirability of accountability will mandate an increased organizational control of all components of the Navy education/training process.

3) Resource restrictions will mandate that increased centralization of certain training functions be required to achieve the economies of size. Some examples might be media development and production, editing, training evaluation, R&D, etc.

4) Consolidation of training will be required if the current trend towards individualization of instruction leads to the use of computer teleprocessing nets to support CAI, CMI, CCI, or other forms of computer supported study. This in turn implies a need for organizational changes to achieve the justification and implementation of these nets. The same rationale applies to the use of teleprocessing nets for administrative control.

e. Process

Statement

The present trends in increasing the educational efficiency and effectiveness of the NETS training process will continue and will be complemented by major improvements in the areas of job and task analysis. Improvements in these technologies will significantly increase the integration of the training process into the actual job stream especially in the maintenance area and similar complex task environments.

Comments

There will be continuing improvements in presently identified educational technologies. Application of these technologies will become increasingly desirable and practical as the cost of various delivery systems, simulators, and other training support devices declines and the systems themselves become more portable. Pertinent change statements are:

1) By the mid-1980's, the majority of training will be delivered at job locations using some form of individualized instruction and either a self-contained delivery system or one driven by teleprocessing nets.

2) There will be an increased emphasis on student motivation in the self-study environment, and by the mid-1980's, gaps in this area will have been more clearly identified and techniques developed and implemented to eliminate them. In short, educational technology will be more balanced in the key areas of design, development, delivery, and human factors.

3) Certain skills will be taught on-site as needed. The previously mentioned improvements in educational technology will make this possible. These changes will complement the development of training/performance aids and the combinatory direction will significantly reduce traditional training requirements.

3. Overview of the Idealized System

The current NETS is performing every function shown in the overall descriptive functional flows (Figure VI 0.2). Consequently, no major functions need be added to idealize the system. Potential areas of improvement emerge in manner and detail. Most of what should be done is being done, although the way in which some operations are being performed may be made much more effective.

Idealized approaches for each function are covered in the discussion for that function. Since sequences and interrelationships are not involved as a rule, idealizations are presented as recommended goals/objectives and alternative approaches. Several specific research problems are called out also on the principle that, where necessary, idealization requires answers to fundamental questions.

Specific concepts for idealization are covered within the discussion of each function. This overview will touch upon those which are pervasive throughout the NETS and which are considered to be of the greatest significance.

a. There is a need to increase the professional approach necessary to conduct a viable education/training system. There are some notable exceptions, but for the most part, a training assignment is regarded as an added duty outside the mainstream of an individual's career. Very often the performance of such duties reveals the secondary nature of the interest and capability. A training career field and professional preparation is needed. The ideal goal is to develop training assignments into career stepping stones.

b. There is need to increase the extent of long range planning in order to widen the planning horizon as well as to increase the sensitivity of NETS elements to future needs.

c. A stronger continuity of effort must be developed. The length of tours and the dearth of long term personnel is a clear problem. Longer tours for key personnel, civilian and military, are needed.

d. The overall inertia of the total Naval System imposes a severe constraint upon the NETS. Within the NETS major organizations, a method is required for rapid shifting of assets, either temporarily or permanently, to meet unprogrammed loads. If peaks and valleys of workload can be known in advance, assets for such situations may be preplanned. Such flexibility should allow the manning of schools to handle average loadings, rather than expected peak loads as is the current practice.

e. The move toward individualized self-paced instruction should be accelerated and standardized. The Naval Education and Training Command is working under a policy to head in this direction. However, the rate of such change is highly variable within individual commands/activities. Definitive guidelines and milestones must be established. Overall, there might be agreement that not all training is amenable to individualization. However, the exceptions should be specified. Reasons for exceptions are:

   Cost-effectiveness
   Rapidly changing technology
   Need for supervised hands-on training.

   Exceptions should be well documented, and research oriented toward developing techniques of overcoming such problems should be instituted. Individualized instruction is used very little in naval training outside of the CNET command. Since from the standpoint of the total Navy system all training should be maximally cost effective, those organizations not aimed toward individual instruction should examine that approach.

f. The extent of technical coordination between elements of the NETS must be increased. This coordination refers to professional/technical interchange at all levels and between all commands in and out of the Navy, or in the CNET Command. There is a need for idea interchanges in the form of meetings, news bulletins, and informal discussions.

g. The extent of student loss through attrition is unacceptably high and must be reduced. Research upon the basic reasons for such fallout is essential. The end objective of such research will be techniques of reducing attrition and for developing cost-effectiveness guides/curves which will show the point of diminishing returns. The latter will indicate when further effort to "aid" the problem student is no longer worth the cost.

h. The approach to training research requires integration. The current fragmentary approaches do not yield the best results for the expenditure of funds. Central control under the leading element in naval training (CNET) is essential. This must include systematic definition of problems, assignment of priorities, and prior commitment to implement effective results.

E. PRIMARY FUNCTIONS OF THE NAVAL EDUCATION AND TRAINING SYSTEM

This section contains a detailed description and analysis of each of the eight major functional categories found operative within the Naval Education and Training System. The general outline for this section was presented in the description of Functional Flows, Section C3.

1. Function 1.0 Develop Training Requirements

a. Definition

To an extent this function is outside of the over-all training system, since only needs for training are involved. It is the responsibility of the training system to fill these needs. However, there is no clear-cut distinction for this important interface. If needs are not perfectly clear, the training that is developed may not meet the need. The need will still exist and the training cost and time will be wasted. Because such situations can occur, and indeed have occurred, this function is being handled as if it were an integral part of the training system.

An essential aspect of developing training requirements is the determination of exactly what is needed. Such determination is performed by a subfunction called "Evaluate the Requirement." These operations require an interaction between the training community and the originators of the requirement. Such interactions tend to be very rare in the current situation.

Once the need is carefully defined in specific terms, an analysis and plan for training is developed (Function 3.0, Analyze and Plan Training).

The development of training requirements encompasses all situations which directly or indirectly impose a need for some type of training. Such situations fall into two broad categories:

1) Develop training requirements for new systems, modifications, or retrofits. As changes are made in hardware, techniques of operation, technology or maintenance, etc., these would tend to necessitate that personnel be trained in accordance with such changes. The cycle for developing requirements for personnel and training is described in NAVSHIPS 0900-060-0380 Ship Life Cycle Management Support Manual - Planning Guide For Training Support of Ship Introductions and Modifications, 15 August 1972, Naval Ship Systems Command, Code 047.

The sequence and interrelationship of activities is relatively well defined in this guide and in OPNAVINST 1500.8G, which in part is incorporated in the guide.

2) Develop requirements for on-going training. Such requirements are due to changes in such things as personnel requirements/characteristics/input rates, etc.; changes in operational demands; changes in policy; as well as any other type of change which might indicate a new or modified training need.

b. Description

The Develop Training Requirements Function is described through an outline which contains all of the functional elements presented in the functional flows, and in addition through an overall functional flow, Figure VI 1.0 - Develop Training Requirements.

Page

1.0 Develop Training Requirements 27
1.1 Develop Requirements for New Systems, Modifications, Retrofits
1.2 Develop Requirements for On-Going Training 30
1.2.1 Develop Requirements Due to Change in Policy . 32
1.2.1.1 Receive New or Revised Policy
1.2.1.2 Estimate the Impact Upon Training
1.2.1.3 Promulgate Policy
1.2.1.4 Develop Preliminary Concepts
1.2.2 Develop Requirements Due to Change in Operational Demand 34
1.2.2.1 Receive Information Relating to Change in Operational Demand
1.2.2.2 Estimate Type and Extent of Impact Upon Training
1.2.3 Develop Requirements Due to Changes in Ratings/NEC 36
1.2.3.1 Receive Information Relating to Change in Rating/NEC
1.2.3.2 Develop Training Requirements for New Ratings/NEC
1.2.3.3 Determine Training Requirements to Drop for Cancelled Ratings/NEC
1.2.4 Develop Requirements Due to Personnel Attrition 38
1.2.4.1 Receive and Evaluate Information on Personnel Needs
1.2.4.2 Develop Quantitative School Data and Quotas

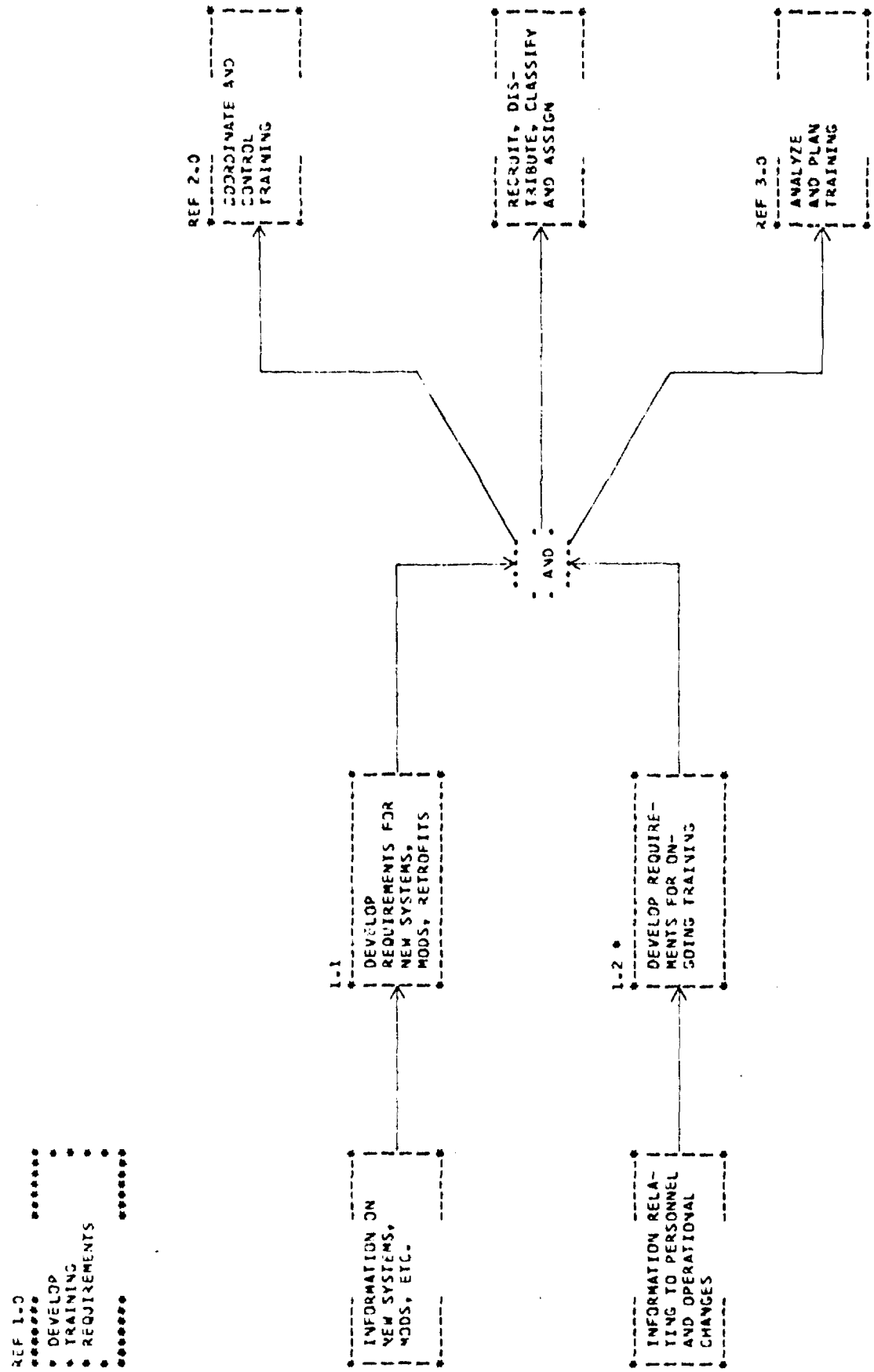

FIGURE VI 1.0-DEVELOP TRAINING REQUIREMENTS

Page

1.2.5 Develop Requirements Due to Changes in Recruit Profile Input 40
1.2.5.1 Receive Notice of Changes in Recruit Profile Input
1.2.5.2 Observe Changes in Recruit Profile Input
1.2.5.3 Develop Requirements for New Courses or Programs
1.2.5.4 Develop Requirements for New Techniques

c. Functional Description of NETS - Function 1.0 Develop Training Requirements

A general description of this function was presented in the outline and top-level flow of the preceding section. Further detail is shown in this section through a series of flows which expand key subfunctions. In addition to notes within the flows that elaborate on significant points, a general discussion of the flow is contained on the facing page.

1.2 Develop Requirements For On-Going Training

This over-view flow depicts the major requirements which are imposed upon on-going training. For the most part, the requirements consist of number of people to be trained. However, 1.2.1 may produce a need for new additional courses or parts of courses. Subfunction 1.2.5 may indicate a need for different kinds of approaches due to increased or decreased capability of recruits.

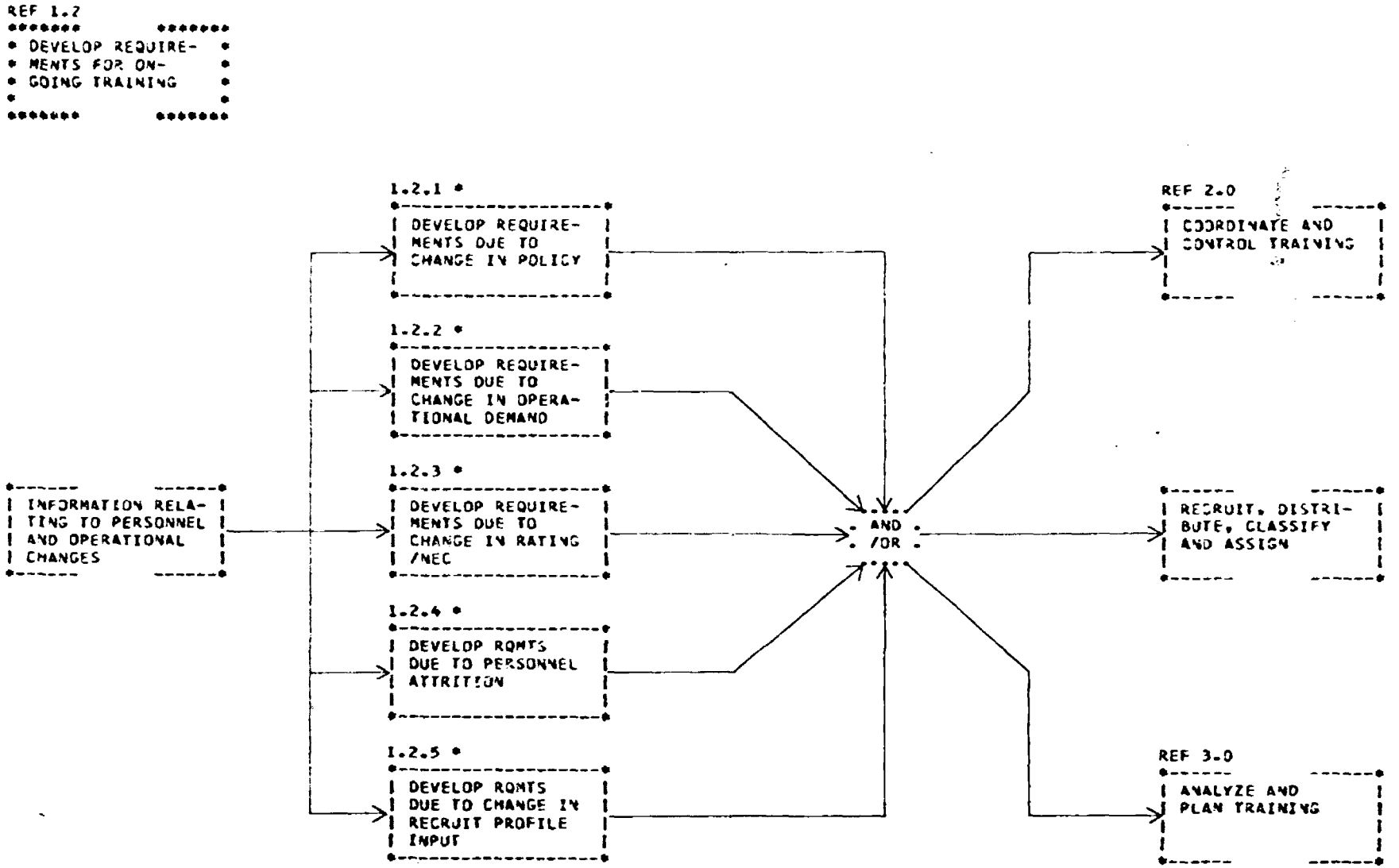

FIGURE VI 1.2-DEVELOP REQUIREMENTS FOR ON-GOING TRAINING

1.2.1 Develop Requirements Due To Change In Policy

As new policy is received, an evaluation must be made as to the nature of the impact upon training, before preliminary concepts for implementation are developed. An example of a new policy having an impact upon training was the decision to implement an All Volunteer Force (AVF).

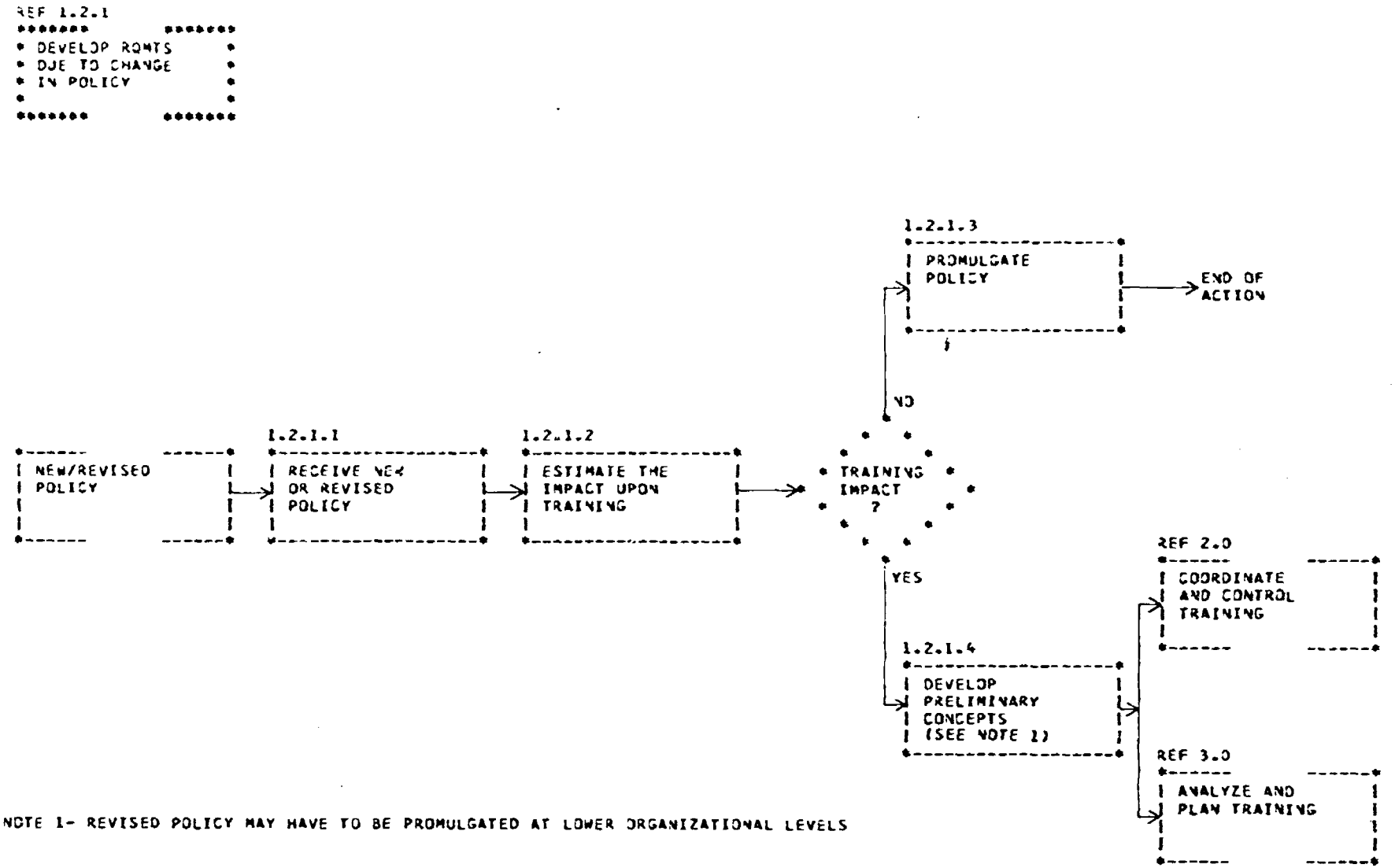

NOTE 1- REVISED POLICY MAY HAVE TO BE PROMULGATED AT LOWER ORGANIZATIONAL LEVELS

FIGURE VI 1.2.1-DEVELOP REQUIREMENTS DUE TO CHANGE IN POLICY

1.2.2 Develop Requirements Due To Changes In Operational Demand

Operational demand may include different numbers of personnel for different NEC's, hardware/system problems, new systems, or changes in tactics. The impact of each of these must be evaluated to determine the effect upon training operations. Some examples where training impacts were noted in this category are:

1) Introduction of the Tactical Action Officer (TAO) course due to the recognition of a new job requirement.

2) Establishment of the Shore Patrol course as a result of a similar recognition of need.

3) Development of LST Bow Ramp Maintenance training resulting from excessive operational problems.

4) Tactical changes introduced through Naval Warfare Documents, e.g., NWP's, NWIP's, ATP's, etc.

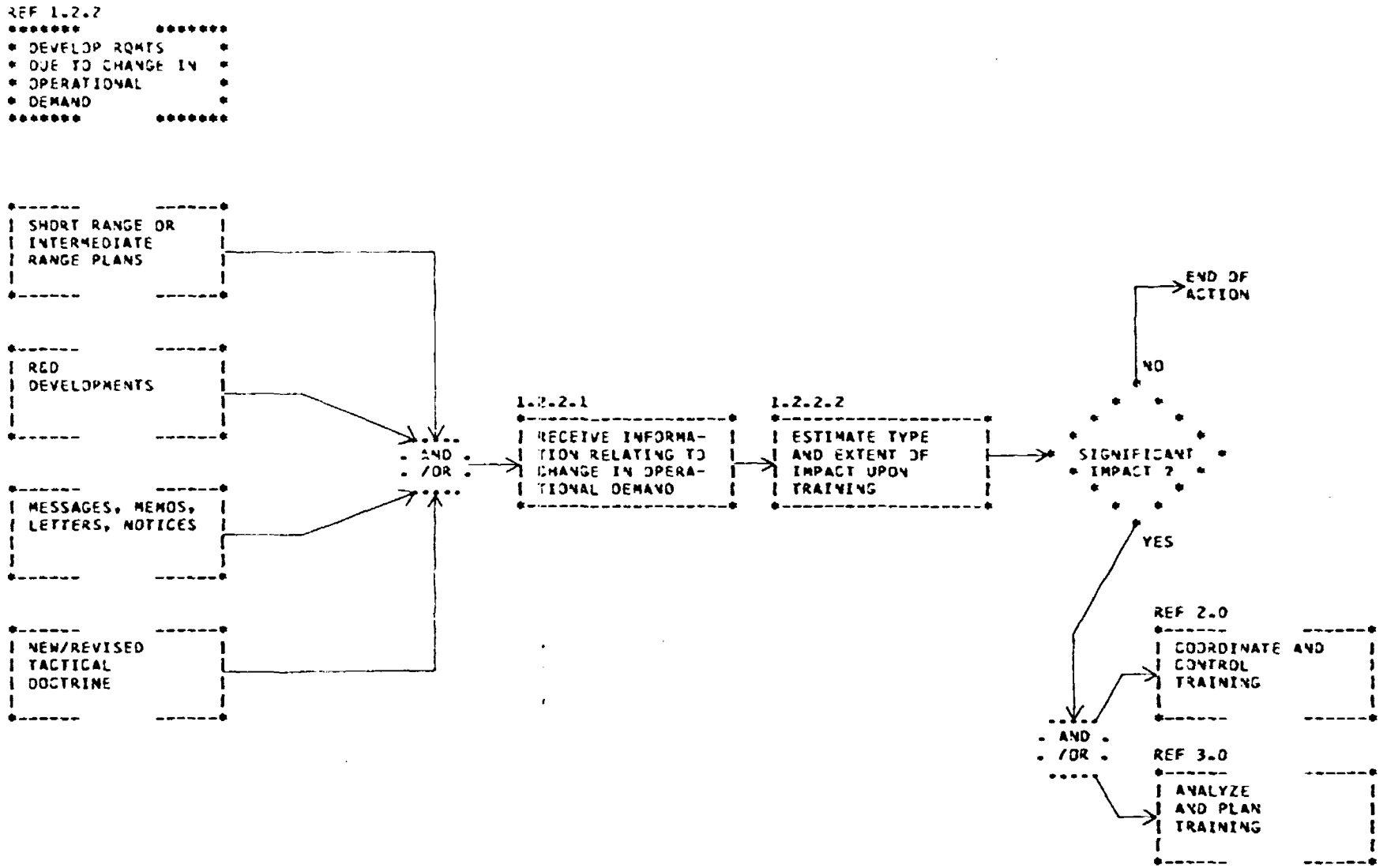

FIGURE VI 1.2.2-DEVELOP REQUIREMENTS DUE TO CHANGE IN OPERATIONAL DEMAND

1.2.3 Develop Requirements Due To Changes in Rating/NEC

Such changes may mean the dropping of some courses or the development of new ones. One example was the establishment of the Master-at-Arms (MAA) Rating and the corresponding identification of training. Training in this case was accomplished by taking advantage of an existing Air Force course.

New equipment introductions or changes in job structures may cause new NEC's to be defined -- thus the potential for a new training course.

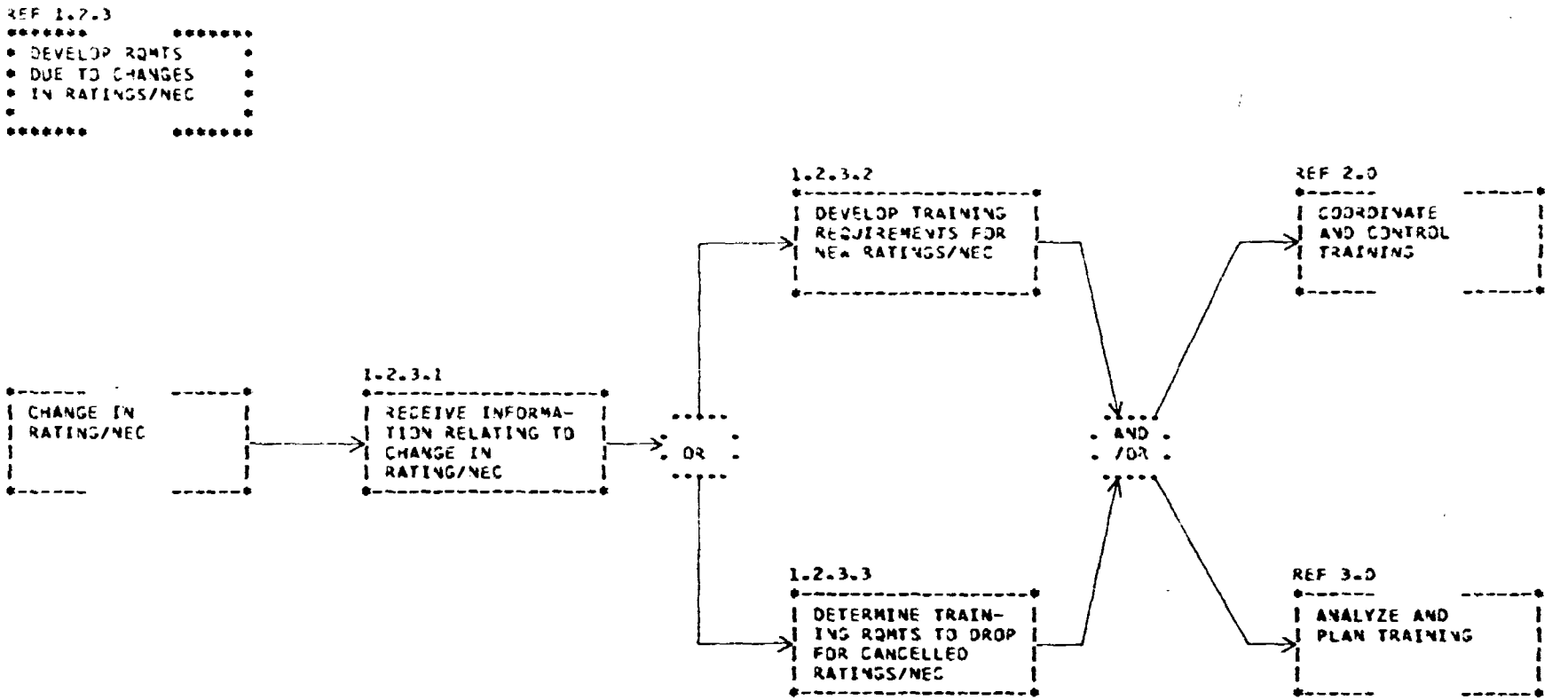

FIGURE VI 1.2.3-DEVELOP REQUIREMENTS DUE TO CHANGES IN RATINGS/NEC

1.2.4 Develop Requirements Due to Personnel Attrition

This refers to the development of the number of people to be trained for the various training categories. This is primarily a personnel function and is based upon past trends. Its application in the development of student loads for "C" school courses is shown, for example, in 6.5.1.3, Develop NEC Awarding "C" School Requirements.

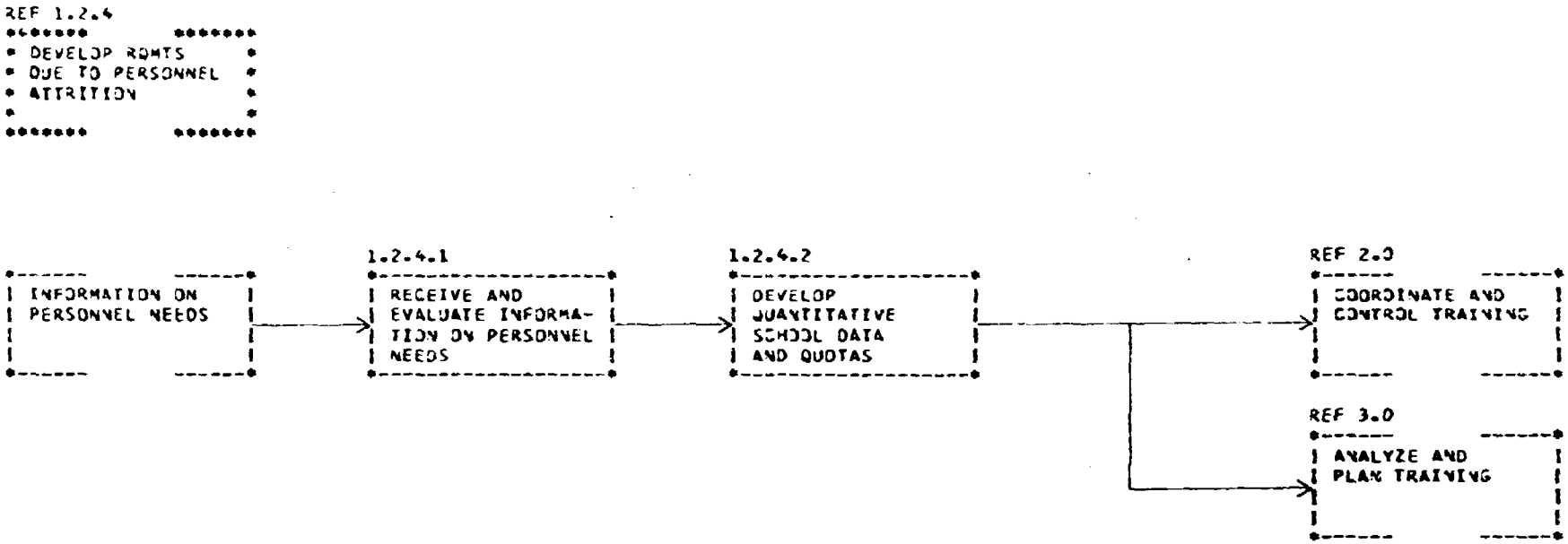

FIGURE VI 1.2.4-DEVELOP REQUIREMENTS DUE TO PERSONNEL ATTRITION

1.2.5 Develop Requirements Due to Change In Recruit Profile Input

As a rule, where the recruit profile changes, the change is noticed in schools. Such changes are detected for the most part by observing an increase in learning problems, test performance, and attrition. This requirement may be accentuated by a corresponding change in training need -- for example, a deterioration of recruit reading skills juxtaposed against the requirement for improved reading proficiency resulting from increased use of self-study material.

The advent of the All Volunteer Force and the increased emphasis on Equal Opportunity programs undoubtedly had an effect in this area.

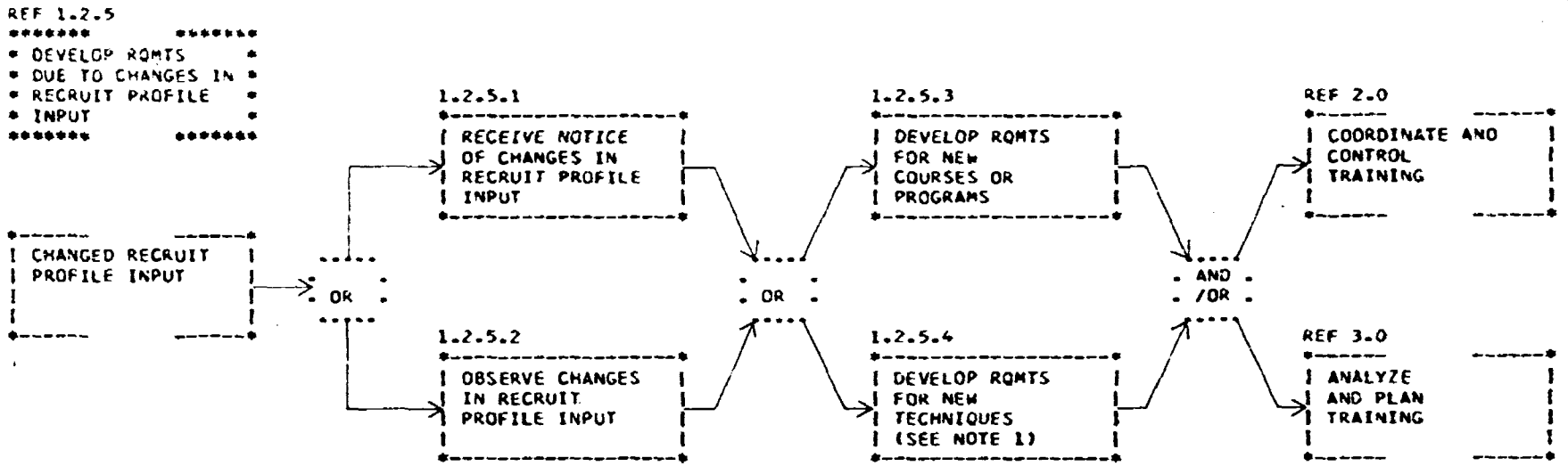

NOTE 1-SUCH NEW TECHNIQUES MAY BE THOSE THAT CAN COPE WITH AN INCREASE OR DECREASE IN RECRUIT CAPABILITY TO LEARN, OR THAT CAN HANDLE A WIDE RANGE OF TALENT MOST EFFECTIVELY. TO AN EXTENT, THE USE OF INCREASED "INDIVIDUALIZED-SELF PACED INSTRUCTION" IS AN EXAMPLE OF SUCH AN APPLICATION.

FIGURE VI 1.2.5-DEVELOP REQUIREMENTS DUE TO CHANGES IN RECRUIT PROFILE INPUT

d. Summary of Major Technological Gaps and Problem Areas - Function 1.0 Develop Training Requirements

1) The training system does not participate sufficiently early in developing training requirements for new or modified systems/equipment.

2) Requirements for ongoing training are not well defined for the most part.

e. Idealized Approaches - Function 1.0 Develop Training Requirements

The clear definition of training requirements is an absolute must in an idealized training system. In the current approach much of the initial definition is performed well before the training establishment enters into full participation. This problem is discussed in the context of Function 3.0 (e.), since analysis is needed to define training requirements. The type of analysis needed for this definition may be considered as pre-analysis, in order to differentiate it from the later more detailed analysis.

Pre-analysis yields the broad requirements of what the training is for, the kinds of equipment or systems involved, the expected length of training, number of personnel involved, general training objectives, and all other pertinent information to give a full definition of training requirements.

Analysis gives much more detailed information which initially concentrates on the details of the position/job being trained for. This start serves as the basis for further analysis which defines what must be covered in the course.

The training system must become involved early in the development cycle to participate in the definition of requirements for training. This will ordinarily require some instruction with contractors for hardware developments. All such relationships should be through the SYSCOM which has major development responsibility.

Similarly, training needs which come up other than for new equipments must be defined carefully. Such needs may come from the Fleet, CNO, or higher authority. For example, assume a need is given for a particular kind of skill training. This may be as specific as "how to repair a particular piece of equipment" or "the operation of the 3-M system." It may be broader such as "first-aid" or "deck-seamanship." It may be very broad such as training for Shore-Patrol duty.

Such inputs are not training requirements, but merely statements of perceived needs. In order to turn the need into a requirement, careful pre-analysis must be performed. The steps of the pre-analysis are shown in Figure VI 1.2.6. Notice that part of this pre-analysis consists of an evaluation of possible design deficiencies and the sending of feedback information to schools, as appropriate. The output is a clearly defined training requirement. This has emerged as a result of interaction with the originator of the need.

Another type of training requirement is the determination of the number of people to be trained. This determination for "A" schools is done currently by means of a computer program. This is an effective approach and appears to have all the required features of an idealized system. However, the determination of number of students to be trained for "C" schools requires much improvement to achieve a condition near the ideal. At a minimum, a validation of the conceptual approach and a computerization must be developed. These concepts are expanded in the discussion of Function 6.0, Figures VI 6.5.1 and VI 6.5.1.3.

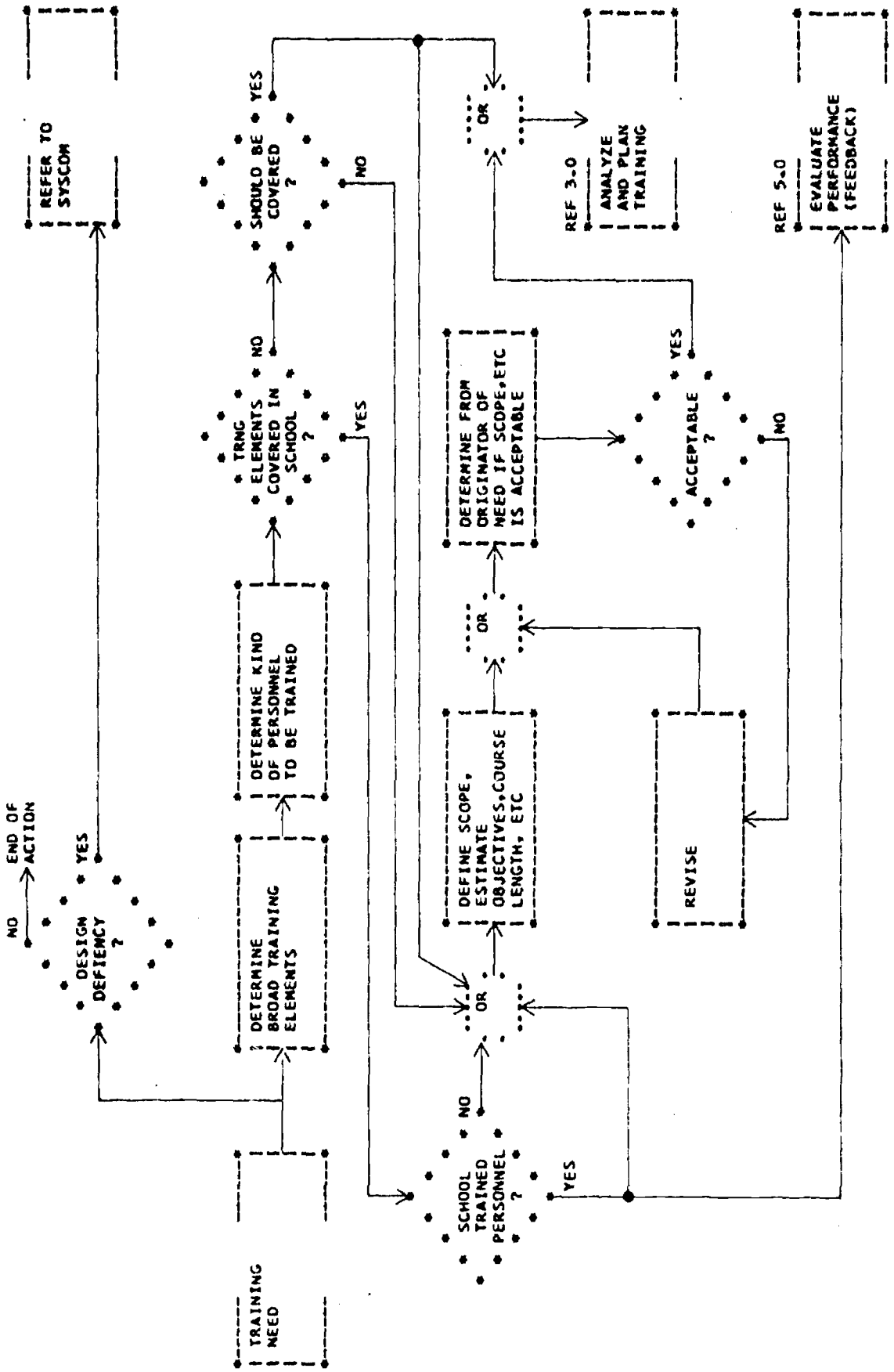

FIGURE VI 1.2.6-PRE-ANALYZE TRAINING NEEDS (IDEALIZED)

2. Function 2.0 Coordinate and Control Training

a. Definition

Training coordination and control incorporates the primary management/supervisory subfunctions. These include the activities of headquarters/staff groups at all levels. While the subfunctions are the same for all levels, the degree of depth will be different, as is to be expected.

The general command subfunctions which would pertain to any type of military organization are not included. Those that are included are the subfunctions pertaining most directly to training.

Some subfunctions in other functional areas also deal with management/control. To a small extent there is an overlap. However, the primary distinction is that this section emphasizes coordination over two or more organizations that do the same thing. Where specific control subfunctions are called out, these tend to deal with directing operations for a single organization.

b. Description

The Coordinate and Control Training Function is described through an outline which contains all of the functional elements presented in the functional flows, and in addition through an overall functional flow, Figure VI 2.0 - Coordinate and Control Training.

	Page
2.0 Coordinate and Control Training	49
2.1 Develop Training Policy and Constraints	52
2.1.1 Determine Need for New Training Policy	
2.1.2 Review Policies and Instructions	
2.1.3 Maintain Knowledge of Technological Advances	
2.1.4 Draft Specific Policy for Subordinate Commands	
2.1.5 Develop Training Approach	
2.1.6 Develop Draft Instruction	
2.1.7 Distribute Draft Policy for Comment	
2.1.8 Incorporate Applicable Comments	
2.1.9 Drop the Approach	
2.1.10 Present Revised Draft for Approval	
2.1.11 Publish and Disseminate New Instruction	

Page

2.2 Monitor Activities 54
2.2.1 Review Record of Milestones for Significant Actions
2.2.2 Notify Subordinate Command
2.2.3 Determine Reason for the Delay
2.2.4 Assist as Required
2.2.5 Set New Due Date
2.2.6 Receive Outputs
2.2.7 Review Outputs
2.2.8 Prepare Comments and Return to Originator
2.2.9 Receive Corrected Version
2.2.10 Approve and/or Utilize as Needed
2.3 Inspect Training Facilities/Operations 56
2.3.1 Prepare for Training Inspection
2.3.2 Make Administrative Arrangements
2.3.3 Develop Inspection Plan/Procedure
2.3.4 Conduct Training Inspection
2.3.5 Collate and Organize Data
2.3.6 Develop Findings and Recommended Actions
2.3.7 Prepare Preliminary Statements for Report
2.3.8 Conduct Debriefing
2.4 Keep Aware of Resource Availability 58
2.4.1 Develop Source/File of Resources
2.4.2 Keep Running Account of Gains/Losses and Expenditures
2.4.3 For Unprogrammed Requirements: Determine if Resources are Adequate
2.5 Assign Responsibilitities/Task Subcommands . . . 60
2.5.1 Evaluate Nature of the Requirement
2.5.2 Develop Guidelines for an Approach
2.5.3 Determine Organization Best Qualified for the Task
2.5.4 Task the Organization
2.5.5 Develop Milestones
2.5.6 Direct the Organization to Reallocate Resources
2.5.7 Delay the Requirement
2.6 Coordinate Activities 62
2.6.1 Determine Best Methods of Dividing the Task
2.6.2 Determine Specific Assignments
2.6.3 Determine Best Methods of Fulfilling the Requirement
2.6.4 Task Each Organization to Perform the Approach
2.6.5 Obtain Outputs
2.6.6 Change Each to Reflect a Common Approach
2.6.7 Assign Responsibility to One Organization
2.6.8 Assign Assist Role to the Other Organization(s)
2.6.9 Obtain Integrated Output
2.7 Develop Reports
Request Inputs
Develop Total/Composite Reports

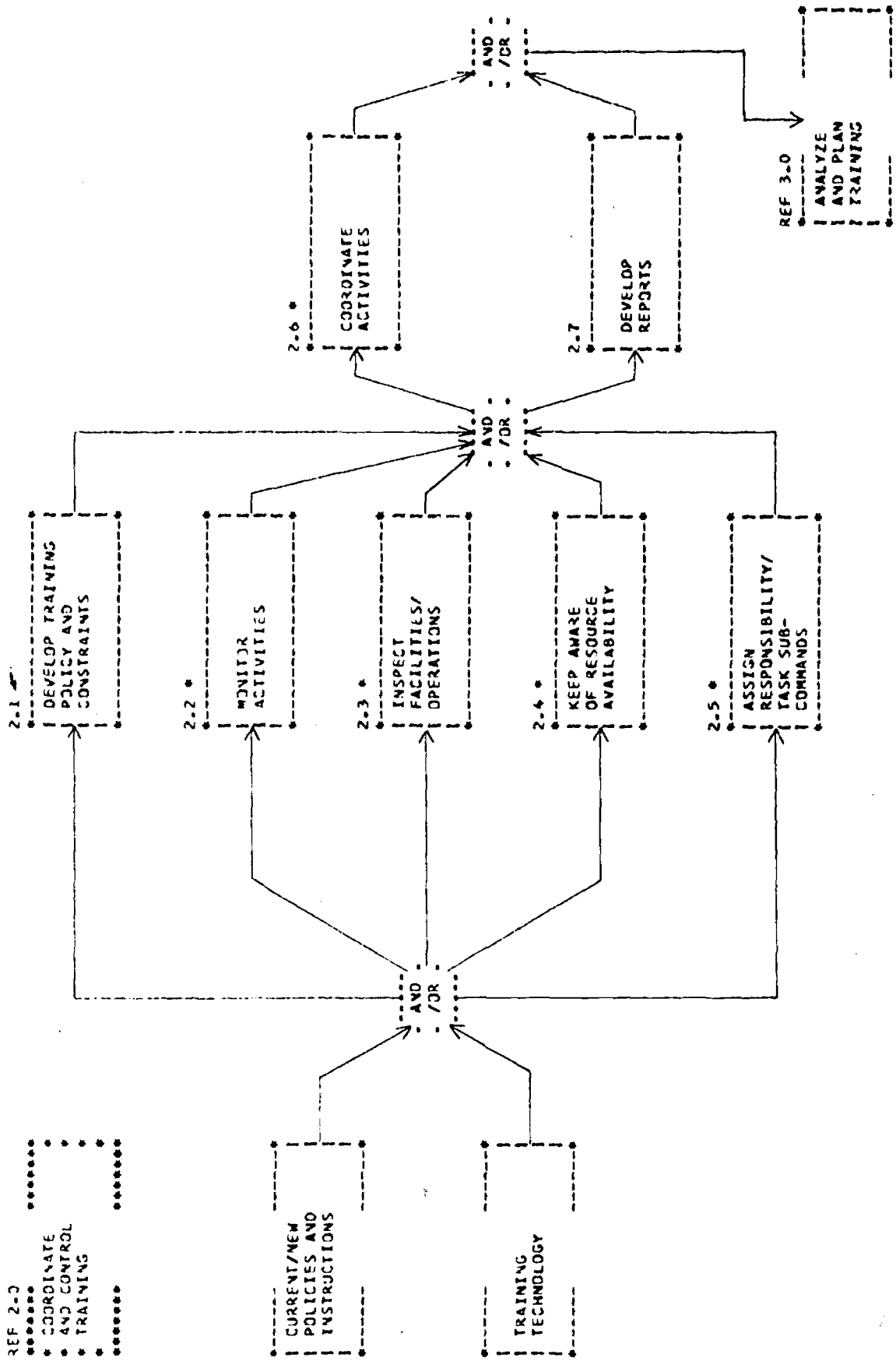

FIGURE VI 2.0-COORDINATE AND CONTROL TRAINING

c. Functional Description of NETS - Function 2.0
Coordinate and Control Training

A general description of this function was presented in the outline and top-level flow of the preceding section. Further detail is shown in this section through a series of flows which expand key subfunctions. In addition to notes within the flows that elaborate on significant points, a general discussion of the flow is contained on the facing page.

2.1 Develop Training Policy and Constraints

This over-view flow shows the tasks and decisions involved in developing training policy and constraints.

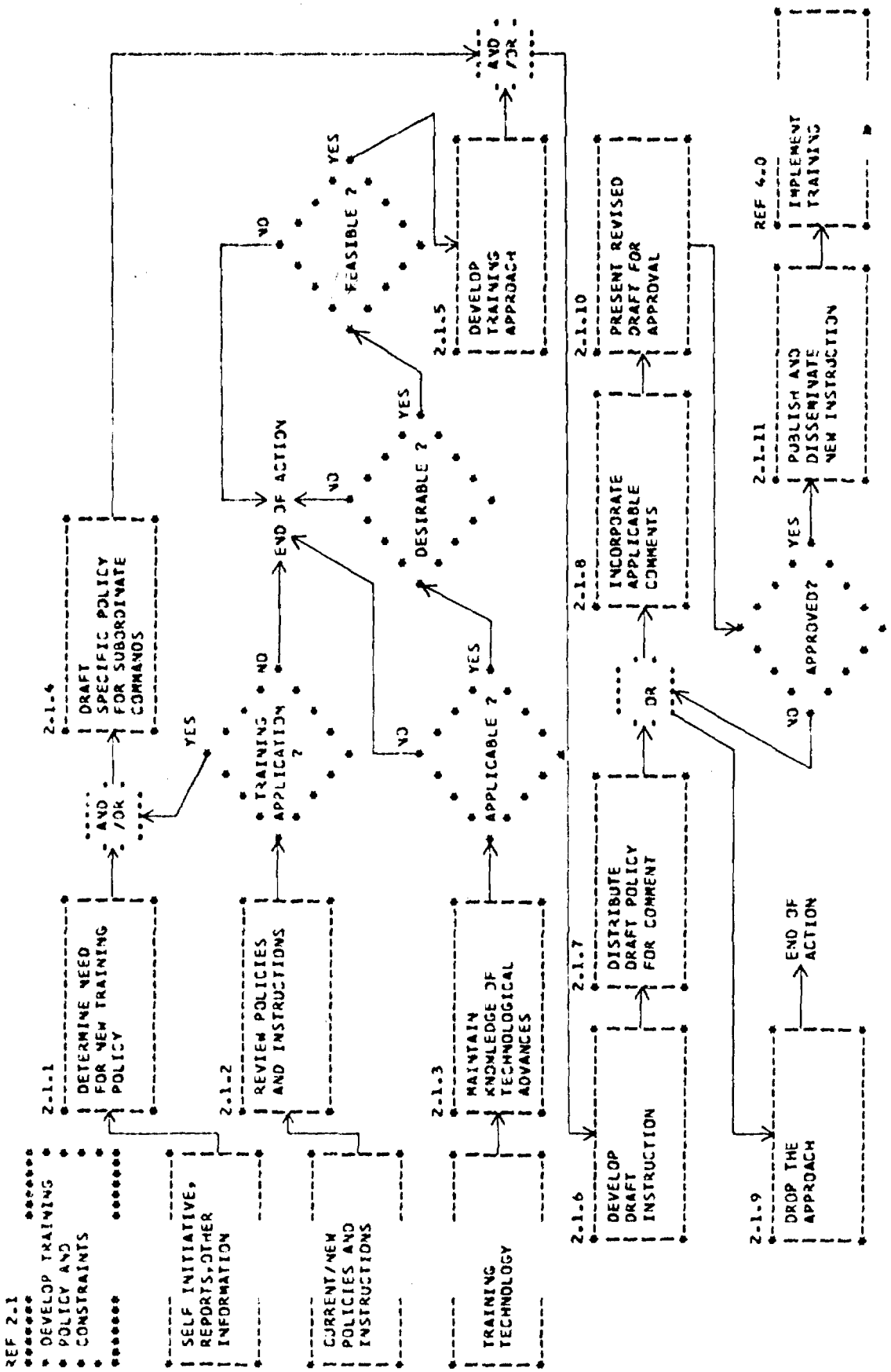

FIGURE VI 2.1-DEVELOP TRAINING POLICY AND CONSTRAINTS

2.2 Monitor Activities

These are the broad subfunctions and decisions required in the monitoring of activities. While not shown, it is assumed that informal early checks on progress are made, so problem areas may be handled before a deadline comes up, rather than after.

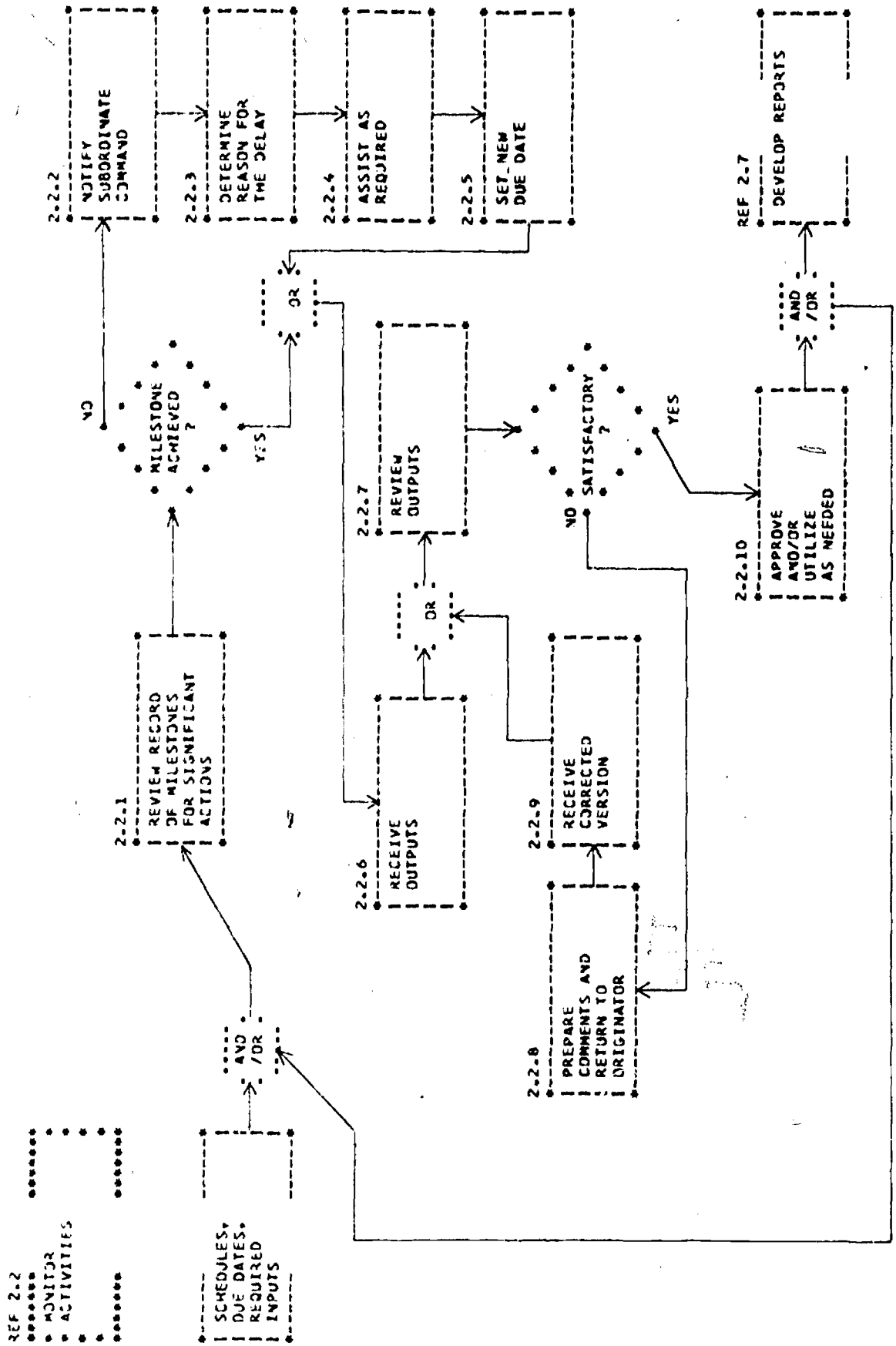

FIGURE VI 2.2-MONITOR ACTIVITIES

2.3 Inspect Training Facilities/Operations

The inspection should have a training purpose as well as an investigative purpose. Training purposes may be served by requiring each organization to self-check themselves before a formal inspection. Such checks may be done by following, as a guide, the Educational Self Audit, NAVTRASUPP Form No. 2; CHNAVTRASUPP; Pensacola, Florida.

Also, the inspection serves as a training purpose through a careful debriefing. Such debriefing must detail, not only deficiencies and problem areas, but also positive methods for correction.

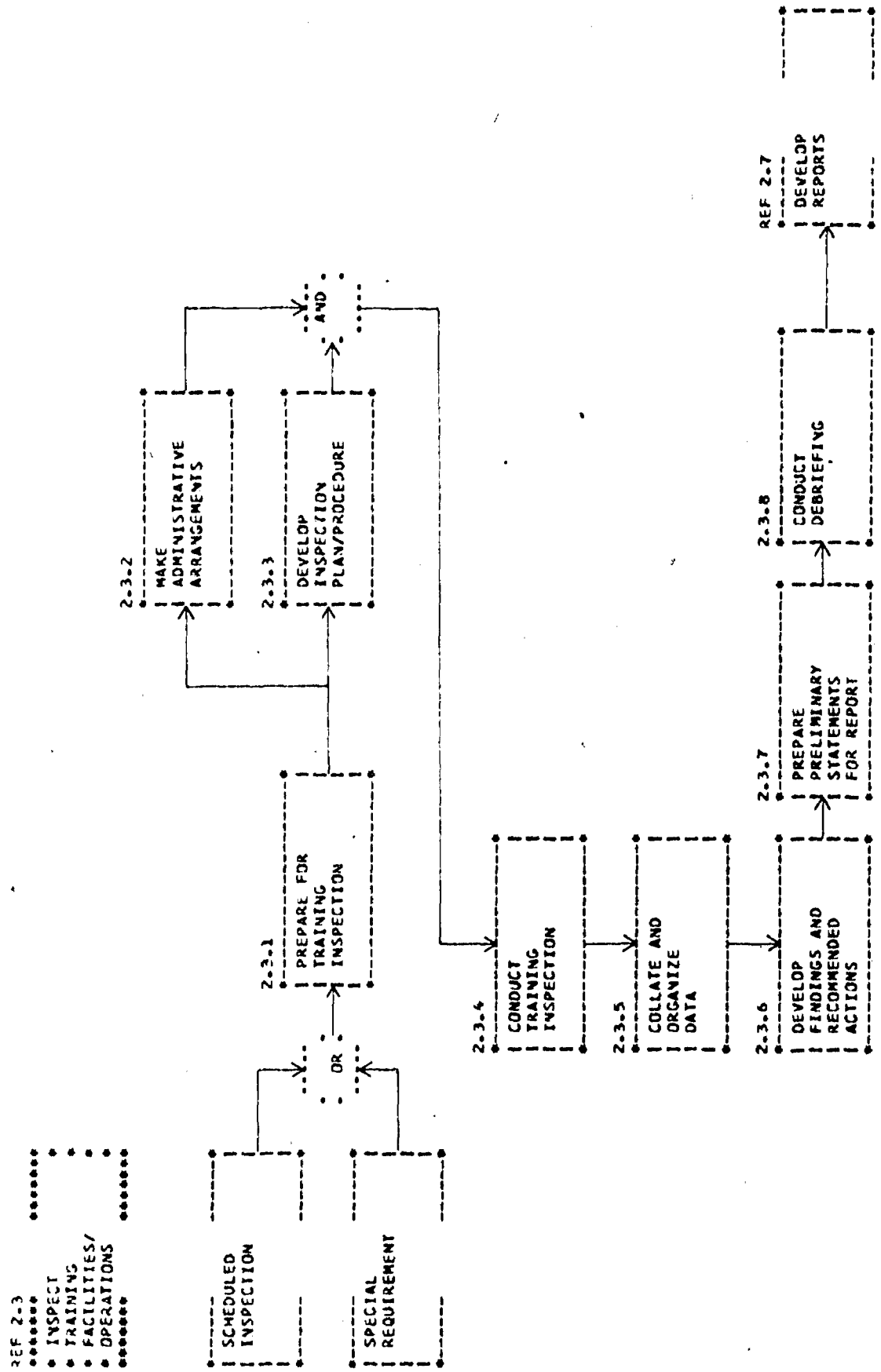

FIGURE VI 2.3-INSPECT TRAINING FACILITIES/OPERATIONS

2.4 Maintain Awareness Of Resource Availability

This self explanatory flow serves the purpose of highlighting the need to know where the organization stands fiscally.

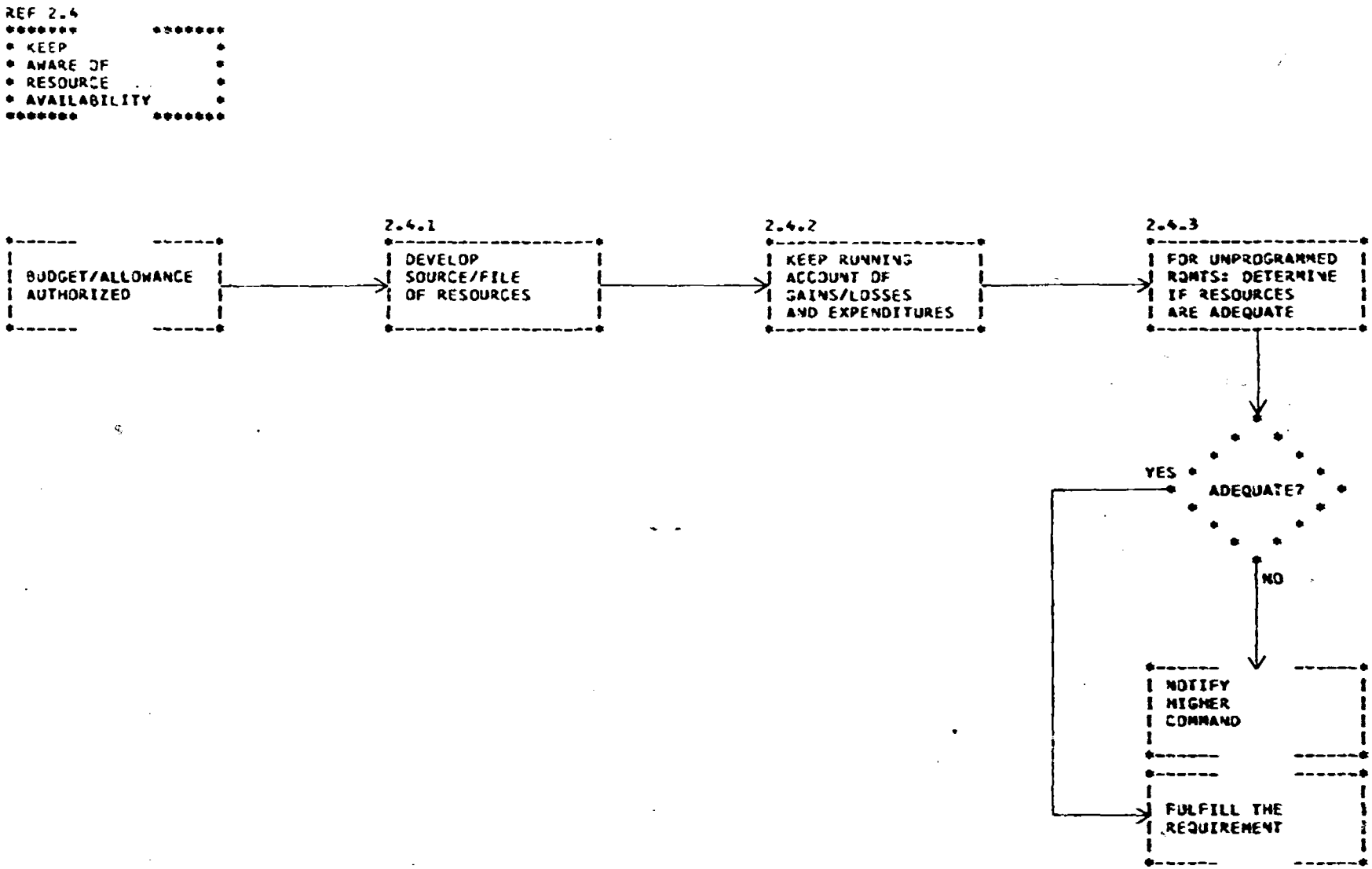

FIGURE VI 2.4-KEEP AWARE OF RESOURCE AVAILABILITY

2.5 Assign Responsibilities/Task Subcommands

This flow shows the broad tasks and decisions required in the systematic assignment of responsibilities.

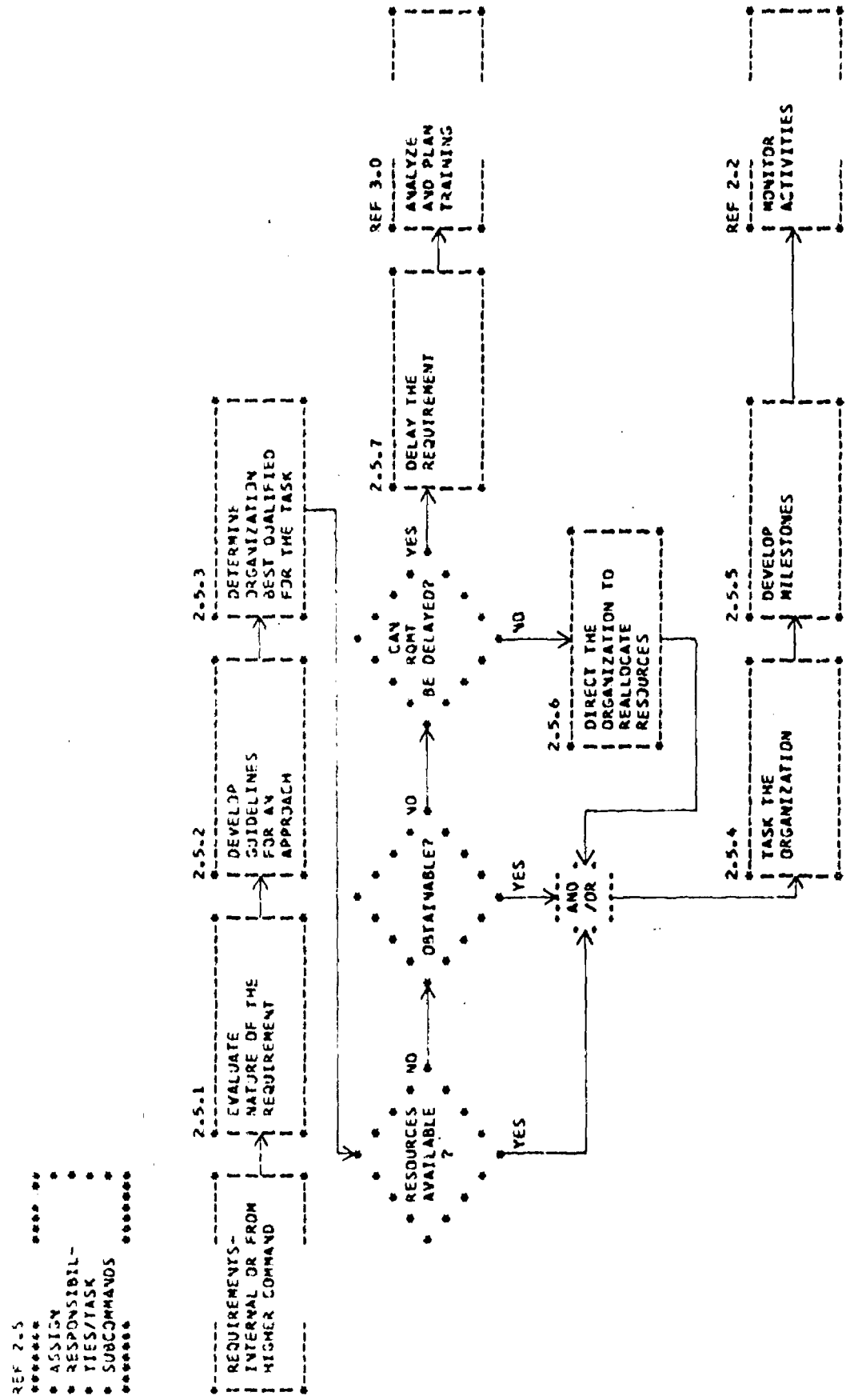

FIGURE VI 2.5-ASSIGN RESPONSIBILITIES/TASK SUBCOMMANDS

2.6 Coordinate Activities

Coordination involves the control of relationships between two or more organizations. They may be performing the same type of activity, such as two "A" schools at different locations. Coordination is involved also when a function is to be performed by different organizations, each of which has a different part to do. In either case, the coordinator must prevent: duplication, different approaches, and conflicting approaches. Thus the coordinator is an essential leader/manager. Failure to perform this function correctly could lead to excessive loss of time and manpower. Furthermore, minor chaos could occur easily.

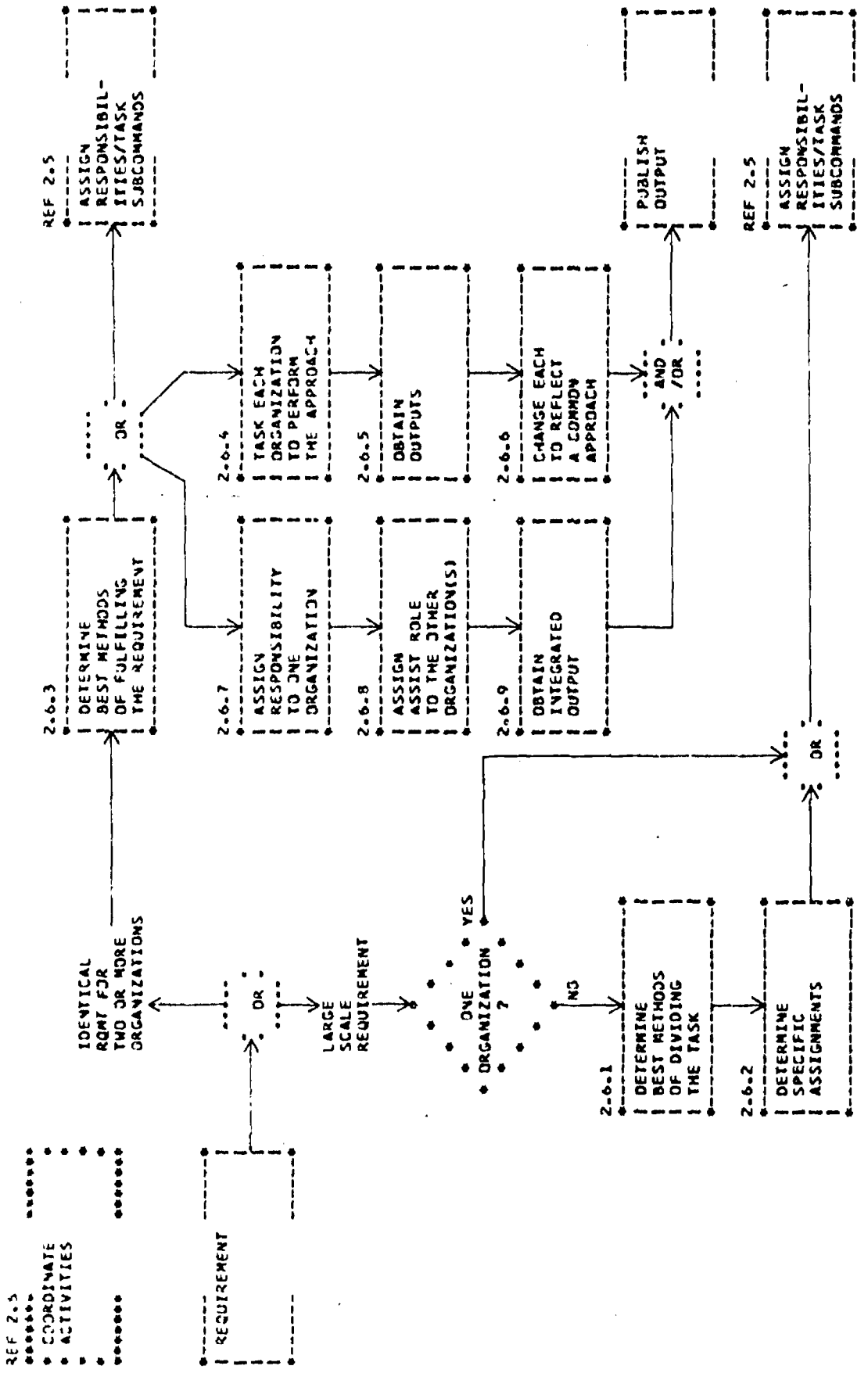

FIGURE VI 2.6-COORDINATE ACTIVITIES

2.6 Coordinate Activities (Continued)

The largest single group with responsibility for coordination and control is the staff of Training Program Coordinators (TPC's) within CNTECHTRA. While other commands in CNET and other training organizations do not have individuals designated as TPC's, many of the subfunctions are performed by separate sections of staffs. The following is an idealized version of TPC functions. It was developed from inputs of several TPC's as well as from other staff officers performing similar functions. It is doubtful that any TPC, or his equivalent, fits this generalized characterization completely, at this time.

Generalized Description of the Training Program Coordinators' Functions

The TPC is given responsibility for the training activities of a system(s), rating(s), or both. This involves the total planning and execution of CNTECHTRA training programs for the assigned area of responsibility.

This includes:

- o the determination of the training objectives for assigned programs,
- o assuring that schools and courses of instruction meet these training objectives, and
- o providing detailed information for promulgation in Navy training plans.

1) Specific responsibilities of the TPC are to:

a. Administer and manage training to identify requirements in terms of programs, schools, and courses of instruction. These will be based upon present and anticipated needs of the Navy, objectives to be attained, and directives from higher authority.

b. Formulate plans and long-range objectives to meet these requirements including determination as to:

- o establishment and disestablishment of schools and courses,
- o new training sites with regard to suitability for adequate and effective training facilities, potential capacity, etc.,

- requirements for and methods of obtaining adequate facilities and funds,
- staff and student personnel requirements,
- procedures for institution of courses,
- eligibility prerequisites for students,
- scheduling of timely letters and directives concerned with the administration and management of the schools and training programs, and
- assuring conformance with overall policies, procedures, priorities, budgetary limitations, and educational philosophy of Navy training.

c. Plan curriculum in order to:

- determine long and short range requirements for curricula and other training materials in the early planning phases for new developments.

- Furnish guidance to:

  Schools
  Training activities
  SYSCOM personnel
  Contractors
  Others engaged in the preparation and development of training materials during the first few years of development of a new system.

- Determine and define curriculum requirements, establish standards for effective training on new programs, and assure that curricula and the quality of instruction are adequate to meet the objectives.

- Determine the design, development, implementation, and evaluation of programmed learning, individualized instruction, computer applications, and the systems approach to the learn-process. Monitor and coordinate the implementations of these specialties at the schools. Interpret curriculum plans and policy and consult on curriculum matters and training philosophy for new programs. Assure that curricula are designed and/or modified to keep pace with changing requirements.

d. Training Aids and Devices

Coordinate activities related to training aids and devices in order to:

- o Plan and execute training aid's programs involving all manner of aids and devices used by instructors to impart knowledge, build attitudes, and develop skills in students. These range from simple flat graphics (photographs, posters, charts) through projected materials (slides, filmstrips, motion pictures) to complex automated three dimensional demonstrators (models and mockups) and devices (synthetic or simulated).
- o Initiate and supervise training aids/devices development when a weapon, a tactical innovation, or any other change generates a requirement.
- o Formulate and carry out actions necessary to assure proper interpretation of specifications by the producing activity once development is contracted.
- o Monitor the production program to assure that development is orderly and timely.

e. Coordinate activities related to training equipment in order to:

- o Determine the nature and quantity of equipments and supporting hardware including training systems, test and handling equipments, repair parts, and special tools.
- o Determine location of installations. Insure the required equipment is delivered and installed in a timely manner. Maintain close and continuing liaison with the representatives of the appropriate SYSCOMS especially from the standpoint of training equipment availability.
- o Keep abreast of new development programs for fleet systems through careful analysis of research and development information. Continually assess the status of ongoing training programs to determine when additional or substitute equipments are required in support of training or when to remove training equipment which is no longer required.

2) Special knowledges and skills required of the TPC are a/an:

a. High degree of knowledge of how training is and/or should be conducted in assigned areas.

b. Comprehensive knowledge and understanding of the Navy, particularly the operating forces and the officer and enlisted training program.

c. Thorough familiarity with enlisted and officer detailing and classification procedures, budgetary procedures, and contract administration.

d. Familiarity with the technical details of program areas so as to assess training objectives and facilitate curriculum development.

e. Capability for conducting instructional analysis.

f. Ability to apply principles of learning and teaching.

g. Ability to stay abreast of new procedures and methods, trends in professional education and educational psychology as they relate to Navy training needs.

h. Ability to work independently and cooperatively with all echelons of training in the Navy (engineers, technicians, professional educators, managers, supervisors).

i. Capability for exercising independent judgment, especially in such instances as contract negotiations, determination of priorities, evaluations, etc.

j. Comprehensive knowledge and understanding of the principles of management and an ability to apply innovations in the management of assigned areas.

As a further delineation of current TPC functions, the inputs (data and information) received by the TPC are shown in Table VI 2.6A. The outputs of TPC's are shown in Table VI 2.6B.

INPUTS TO TRAINING PROGRAM COORDINATORS (TPC'S)

REQUESTS

1. Many requests for information, data, etc.
2. Requests for training quotas from other services
3. R&D assistance requests
4. Test and Evaluation (T&E) assistance requests

REQUIREMENTS

1. Training Requirements
2. Requirements to: Recommend new NEC's
   Restructure Ratings
   Improve Teaching Methods
3. Directives and Instructions
4. Broad policy guidance

INFORMATION

1. Information from participation in training conferences/ILSMT meetings
2. Information on new equipment (Ships, Systems, units, training equipment) or major modifications including major milestone dates
3. Information on equipment phasing out
4. Information relating school input and attrition to Test Battery scores
5. Reports on school attrition, inputs, graduations
6. Informal early information on training plans
7. Proposed training needs for new systems (Navy and Tri-Service)
8. Manpower needs of the school
9. Information on school staff requirements
10. Instructor requirements
11. Support requirements
12. Skill level of "A" school graduates as correlated to the advanced courses ("A" school requirements for "C" school)

TABLE VI 2.6A INPUTS TO TRAINING PROGRAM COORDINATORS (TPC'S)

OUTPUTS OF TRAINING PROGRAM COORDINATORS (TPC'S)

COORDINATION

1. Coordination of quotas and pipeline problems
2. Coordination/interaction with other TPC's
3. Readdressing information
4. Coordinate development of training films; provide training site and equipment layout for training laboratory
5. Tri-Service liaison, assistance, services
6. Visits and/or coordination with the Fleet by means of conferences, questionnaires, phone, letters, etc.

SCHOOL INTERACTION/GENERAL MONITORING

1. Monitor: School schedule/milestones, factory training, development of training software/hardware, instructor manning levels
2. Reviews/Comments/Approval of school curricula/courses, schedules, PQS
3. School visits, surveys
4. School schedule revisions
5. Information/guidance to schools concerning new or improved educational technology
6. Identified and communicated applicable parts of policy and guidance to subordinate commands

REQUIREMENTS

1. R&D requirements
2. TSOR, SOR, GOR, Contract definition, specifications and all system development items
3. Budget, MILCON, Personnel Requirements
4. ILS package requirements to CNM, CNO, etc.

TABLE VI 2.6B OUTPUTS OF TRAINING PROGRAM COORDINATORS (TPC'S)

OUTPUTS OF TRAINING PROGRAM COORDINATORS (TPC'S)

RECOMMENDATIONS/INPUTS

1. Provide resources for implementation of task analysis
2. Recommend changes as appropriate
3. Inputs to Plans/RMS/Others including impact statements
4. Personnel plans and program development.
5. Develop manpower needs for ultimate inputs to CNO
6. Selection of appropriate training site for new equipment courses
7. Recommendations and/or comments on new NEC's, restructured ratings, teaching techniques
8. Recommendations concerning training quota requests from other services
9. Training plans data
10. Draft: Policy, Letters, inquiries, directives
11. Information/implications of new equipment, mods, or phase-outs

MISCELLANEOUS

1. Validation of training requirements in the form of feasibility statements
2. Review of drafts-instructions, manuals, etc.
3. Special Projects: Individualization
   Consolidation
   Simulation
   Technical Manual Improvement
4. Civilian program assistance
5. OPEVAL assistance; T&E assistance
6. Contract negotiation assistance
7. Participation in formulation of Navy training plans
8. Requests for information from other sections, branches, organizations, services, etc.
9. Responses to requests for information made to the TPC
10. Briefings

TABLE VI 2.6B OUTPUTS OF TRAINING PROGRAM COORDINATORS (TPC'S) (Cont)

d. Summary of Major Technological Gaps and Problem Areas - Function 2.0 Coordinate and Control Training

1) There is no integrated training/education record for all personnel.

2) There is no clear check on instances where personnel are assigned outside of their area of specialized training.

3) Whenever a new idea or policy is issued, it comes as an instruction. As a rule, there is not sufficient detail to tell commands, "how to do it." Consequently, there is a variety of interpretation, much of which is wide of the mark.

4) There is generally inadequate communication between locations. Excellent ideas at one place are unknown at other locations.

5) There tends to be too much disparity between different locations teaching the same subject matter.

6) Often, directives are issued on a priority basis, but no additional resources are allotted. Some other program has to give, but there is no adequate method of evaluating priority of programs.

7) There is a singular lack of standardization of terms for "places" where training occurs.

e. Idealized Approaches - Function 2.0 Coordinate and Control Training

Idealized approaches for this function consist of those general concepts and approaches to management which would offer greater effectiveness for the resources expended in the 1980 time frame.

A fundamental requirement is the establishment of a computerized training/education record for each officer and enlisted person in the Navy. This record must be easily updated, and rapidly retrieved, even from remote locations. Data to be entered would be all pertinent training and education "completions" including On-board Training (OBT) and significant sections of Personnel Qualification Standard (PQS). The development of this kind of data base should be in conjunction with other commands such as the Bureau of Naval Personnel, since the training/education record is really one facet of a total personnel record.

The current expansion of the Enlisted Master Tape is a start toward this idealized goal. Other trends pointing to a more effective data base are the proposed Navy Campus for Achievement-Automated Data System (NCFA-ADS), and the Fleet Ballistic Missile (FBM) personnel data bank. Work on the development of the FBM system has begun. This system is a model of what the future personnel/training/education record may be.

A potential need for the idealized system is safeguards to assure that the Navy has full utilization of trained personnel. Essentially, this means that every effort should be made to assign personnel to billets that are commensurate with their formal training. In no way, should the prerogative of a commanding officer be interfered with. However, the over-all good of the total Navy must be considered. If an assignment outside of a trained skill is deemed necessary, such assignment must be made. However, such information should be conveyed to higher headquarters so a decision may be made as to whether or not a more appropriately trained person might be sent to fill that particular billet.

The potential loss to the Navy as a result of improper utilization of training is sizable. As an illustration, consider the fact that approximately 50,000 students complete "A" school per year; the average school length is 12 weeks, and the cost of training is $200 per week. If even only 1% of these graduates are not appropriately assigned (500 people), a total of $1,200,000 training dollars have been wasted. This does not consider additional loss of morale or possible negative influence on shipping over.

There is a further requirement of an ideal system that the methodology of carrying out relatively complex techniques be specified clearly to all concerned. When an instruction is issued that requires new, unusual, or complicated methodology, there should be meetings/seminars/classes to supplement the written instructions and clarify implementation features. The conduct of such meetings gives the training organizations required information, and at the same time conveys to the command issuing the instruction, a full understanding of implementation problems.

Communication between locations must be improved for the ideal circumstance. At present, there is a fair amount of such interchange, but this must be augmented considerably. While meetings and task forces are helpful, professional type conferences offer considerably more advantage. Such conferences would offer the presentation of "papers" dealing with significant common problems and innovative approaches. In addition, there would be much more opportunity to discuss, informally, issues of mutual interest.

The ideal system must have no significant difference between courses taught at different locations. Such differences will be minimized as individualized instruction is increased. However, even within that context, there may be courses or parts of courses utilizing conventional instruction.

To assure uniformity there should be central control of the development of curricula, programmed texts, guides, and handouts. This will assure that schools at different locations are teaching the same things in the same way using the best possible approach.

The most effective kind of control would be by centrally developing such instructional items. The desired approach would be to use task forces of professionals and technically qualified personnel from the different training units that will use the "to-be-developed" curriculum. These would operate under the direct guidance and control of a highly qualified professional nucleus.

Behavioral objectives for all courses should be developed, reviewed, and revised in a similar matter. To an extent, the objectives are the total key to effective training. If a valid set of objectives are met, the trained individual will be able to perform his job assignment appropriately. This has to be the case since objectives must be based on a task analysis which reflects the job.

Another requirement for idealization is a viable method for determining priorities. Often there is a need to choose between programs, approaches, types of courses, etc. Without an effective priority selection, decisions may be questionable. The approach to computer simulation mentioned in the discussion of Function 3.0 (e.) is applicable also for considering priorities. The problem of priorities is discussed also in the context of Function 6.0.

Another facet of an ideal system is consistency and uniformity of designating an instructional organization. The large difference in the size of training: centers, schools, detachments, units presents a most confusing picture. The origin of such differences is understandable since the present more centralized training structure picked up a number of relatively disparate elements. However, there is a need for a realignment of current terminology and organizations. Since organizational structure is not part of the mission of this study, no further comment will be made on that point. However, the related terminology is covered in the discussion of Function 4.0 (e.).

3. Function 3.0 Analyze and Plan Training

a. Definition

The Analyze and Plan Training function involves the development of concepts for training, the planning of how the training will be performed, and the development of requirements to be input in order to determine the costs of implementation.

For new or modified systems, the sequences depicted fit very closely. In such instances, the function fits into the requirements of OPNAVINST 1500.8G "Preparation and Implementation of Navy Training Plans for New Developments," 28 June 1972. However, this instruction is also involved with the function of developing training requirements (Function 1.0).

The function of training analysis and planning applies to ongoing training primarily through continual evaluation of training operations. Such operations include scheduling, analytic requirements, and resource requirements.

Subfunction 3.4 - "Analyze Performance Requirements" is probably the most significant of the subfunctions. This deals with specific task analytic approaches which are the keys to optimal cost-effectiveness of training.

b. Description

The Analyze and Plan Training function is described through an outline which contains all of the functional elements presented in the functional flows, and in addition through an overall functional flow, Figure VI 3.0 Analyze and Plan Training.

	Page
3.0 Analyze and Plan Training	77
3.1 Develop Training Concept	80
3.1.1 Determine Maintenance/Operational Concept	
3.1.2 Determine Extent of Training Needed	
3.1.3 Determine Rate/Ratings to be Trained	
3.1.4 Determine Constraints	
Policy	
Lead Time	
Costs	
Facilities	
Equipment	
3.2 Develop Initial Estimates of Training Parameters .	82
3.2.1 Determine Type(s) of Course(s)	

Page

3.2.2 Determine Student Prerequisites
3.2.3 Determine Student Loads and Quotas
3.2.4 Determine Locations for Training
3.2.5 Determine Need for Additional Facilities
3.2.6 Determine Training Approaches
3.2.7 Determine Training Costs
3.3 Develop Initial Schedule 84
3.3.1 Establish Sequence of Events
3.3.2 Estimate Lead Times
3.3.3 Determine Time Needed Per Course
3.3.4 Determine Number of Courses Per Year
3.3.5 Integrate Data Into a Time Chart
3.4 Analyze Performance Requirements (What to Train For) 86
3.4.1 Develop Task Analytic Data 88
3.4.1.1 Perform Job Task Analysis 90
3.4.1.1.1 Select Rating/Job for Analysis
3.4.1.1.2 Collect References (Pertaining to the Rating/Job)
3.4.1.1.3 Obtain Skilled Personnel (Experienced in the Rating/Job)
3.4.1.1.4 Develop List of Objects/Things (Job Involved)
3.4.1.1.5 Develop Action Verb List (Showing What is Done or May be Done to the Thing)
3.4.1.1.6 Develop List of Supporting Skills
3.4.1.1.7 Construct Form, Develop Directions
3.4.1.1.8 Conduct Administrative Arrangements (for Data Gathering)
3.4.1.1.9 Collect Data
3.4.1.1.10 Obtain Readout of Grouped Data (Task Inventory)
3.4.1.1.11 Organize Data in Tabular Form
3.4.1.2 Perform Training Task Analysis 92
3.4.1.2.1 Evaluate Each Task to Determine Locus of Training ("O", "A", "C", OJT)
3.4.1.2.2 Place Tasks in Logical Sequence
3.4.1.2.3 Break Each Task Into Detailed Subtasks
3.4.1.2.4 Determine Training Elements for Each Subtask
3.4.1.2.5 Develop Preliminary Objectives
3.4.1.2.6 Develop Preliminary Standards, Tests, and Methods of Instruction (for each Subtask)

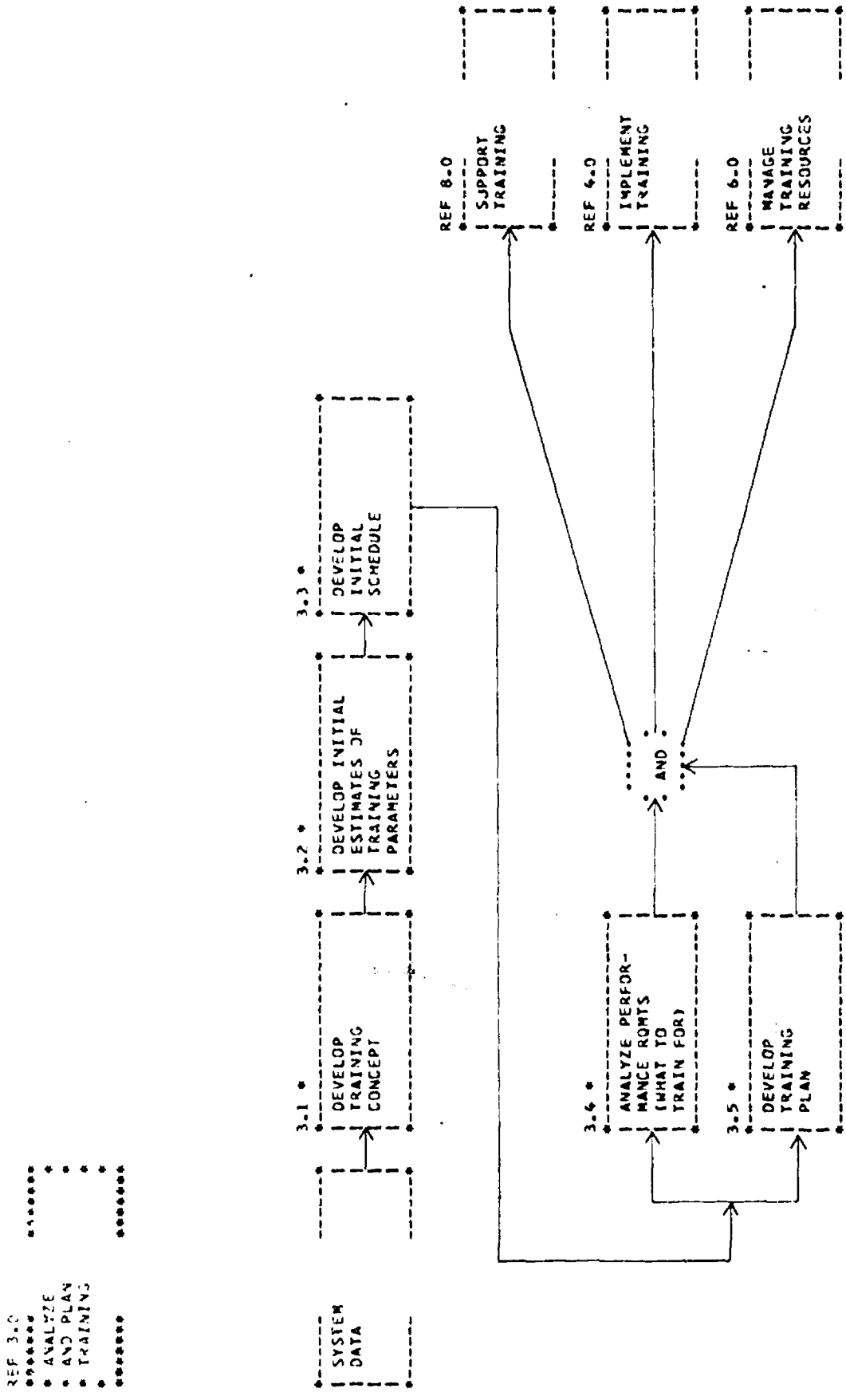

FIGURE VI 3.0-ANALYZE AND PLAN TRAINING

Page

3.4.2 Develop Personnel Qualification Standards (PQS) 94
3.4.2.1 Obtain References for the Equipment/Job
3.4.2.2 Obtain Skilled Personnel (Experienced on the Equipment/Job)
3.4.2.3 Develop Tasks Within Major PQS Categories (of the PQS Outline)
3.4.2.4 Develop Subtasks for Each Task
3.4.2.5 Determine Level of Achievement for Subtasks
3.4.2.6 Arrange in Logical Sequence
3.4.2.7 Apply PQS Numbering System
3.4.2.8 Develop Reference Information
3.4.2.9 Develop PQS Card
3.4.2.10 Review/Approve
3.4.2.11 Publish/Catalog
3.4.3 Develop Personnel Performance Profiles (PPP). . 96
3.4.3.1 Collect References and/or System Data
3.4.3.2 Obtain Technical Experts
3.4.3.3 Evaluate Technical Data to Determine Skill Requirements (Knowledge and Skill Required to Operate and Maintain a System, Subsystem, or Equipment)
3.4.3.4 List and Number in Accordance with WS-13581 (1 Jan 1971)
3.5 Develop Training Plan 98
3.5.1 Determine Type and Number of Courses
3.5.2 Determine Student Loads and Quotas
Prerequisites
Number to be Trained (by Class and Course)
Available Facilities and Training Equipment
Number That Can be Accommodated - by Class
3.5.3 Determine Instructor/Staff Requirements
Number
Characteristics
Training Required
3.5.4 Determine Requirements for Training Support
Facilities
Training Literature
Supplies
Training Materials
3.5.5 Develop Final Schedule
Acquisition of Resources
Preparation for Training
Training Implementation
3.5.6 Revise Schedule as Appropriate

c. Functional Description of NETS - Function 3.0
Analyze and Plan Training

A general description of this function was presented in the outline and top-level flow of the preceding section. Further detail is shown in this section through a series of flows which expand key subfunctions. In addition to notes within the flows that elaborate on significant points, a general discussion of the flow is contained on the facing page.

3.1 Develop Training Concept

The training concept sets the stage for all training to follow. Currently, it is developed early in the development of a system or hardware items.

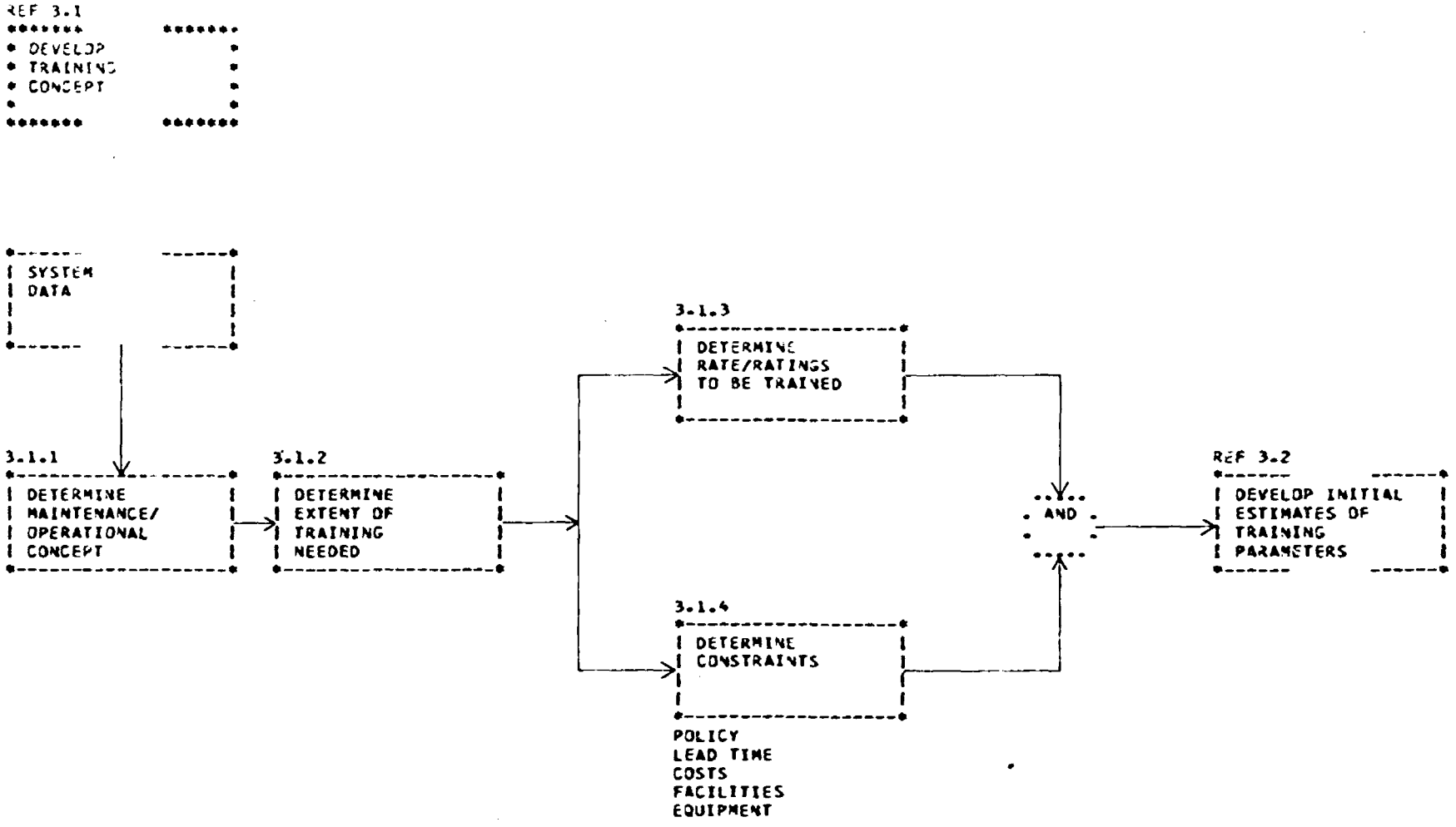

FIGURE VI 3.1-DEVELOP TRAINING CONCEPT

3.2 Develop Initial Estimates Of Training Parameters

The training parameters must be defined in order to arrive at valid cost estimates. Essentially, the defining of costs is performed by expanding items in the training concept.

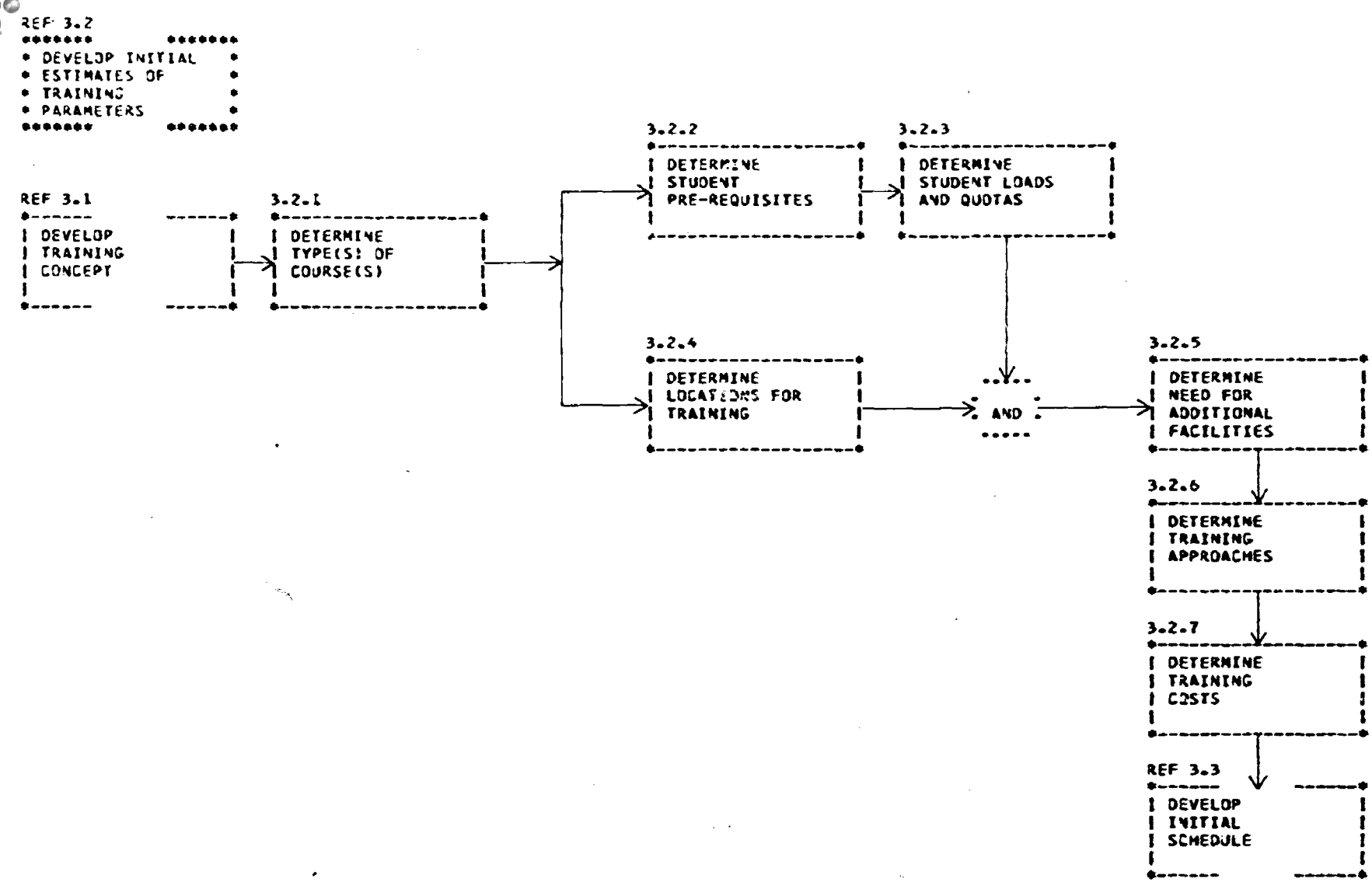

FIGURE VI 3.2-DEVELOP INITIAL ESTIMATES OF TRAINING PARAMETERS

3.3 Develop Initial Schedule

While schedules may be modified by circumstances, an initial cut must be made for planning purposes.

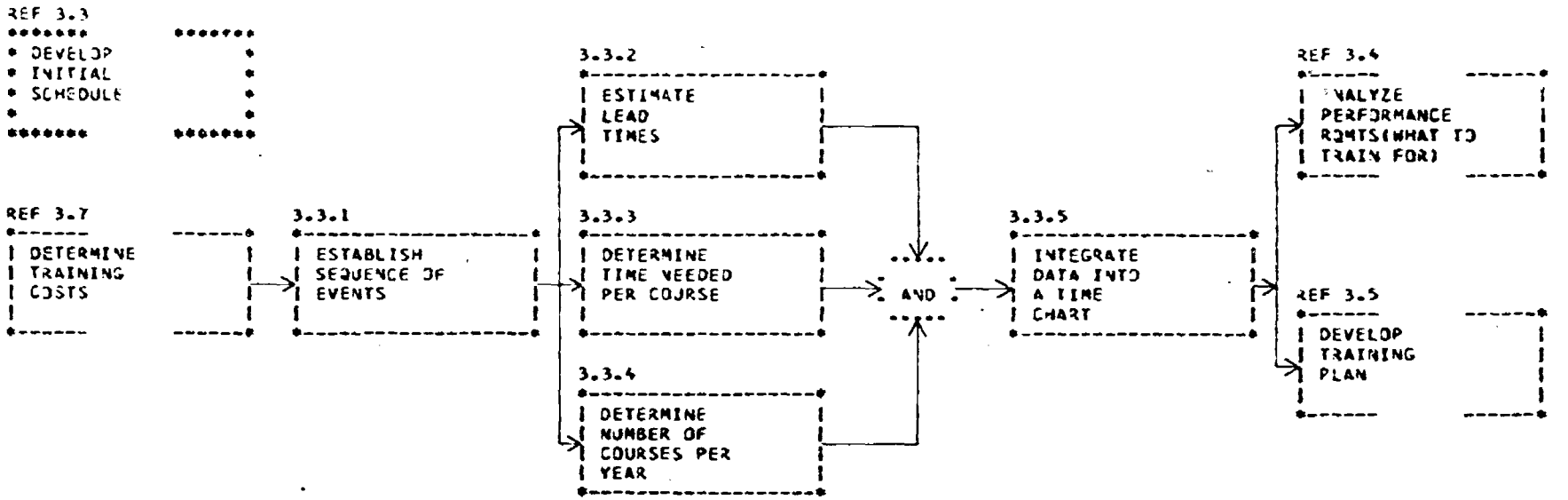

FIGURE VI 3.3-DEVELOP INITIAL SCHEDULE

3.4 Analyze Performance Requirements (What to Train For)

This is an over-view flow showing the major types of analysis that are being performed currently. Such analyses are absolutely essential for effective training, since these are the most certain means of assuring that the training is fulfilling the mission of preparing the individual for his job.

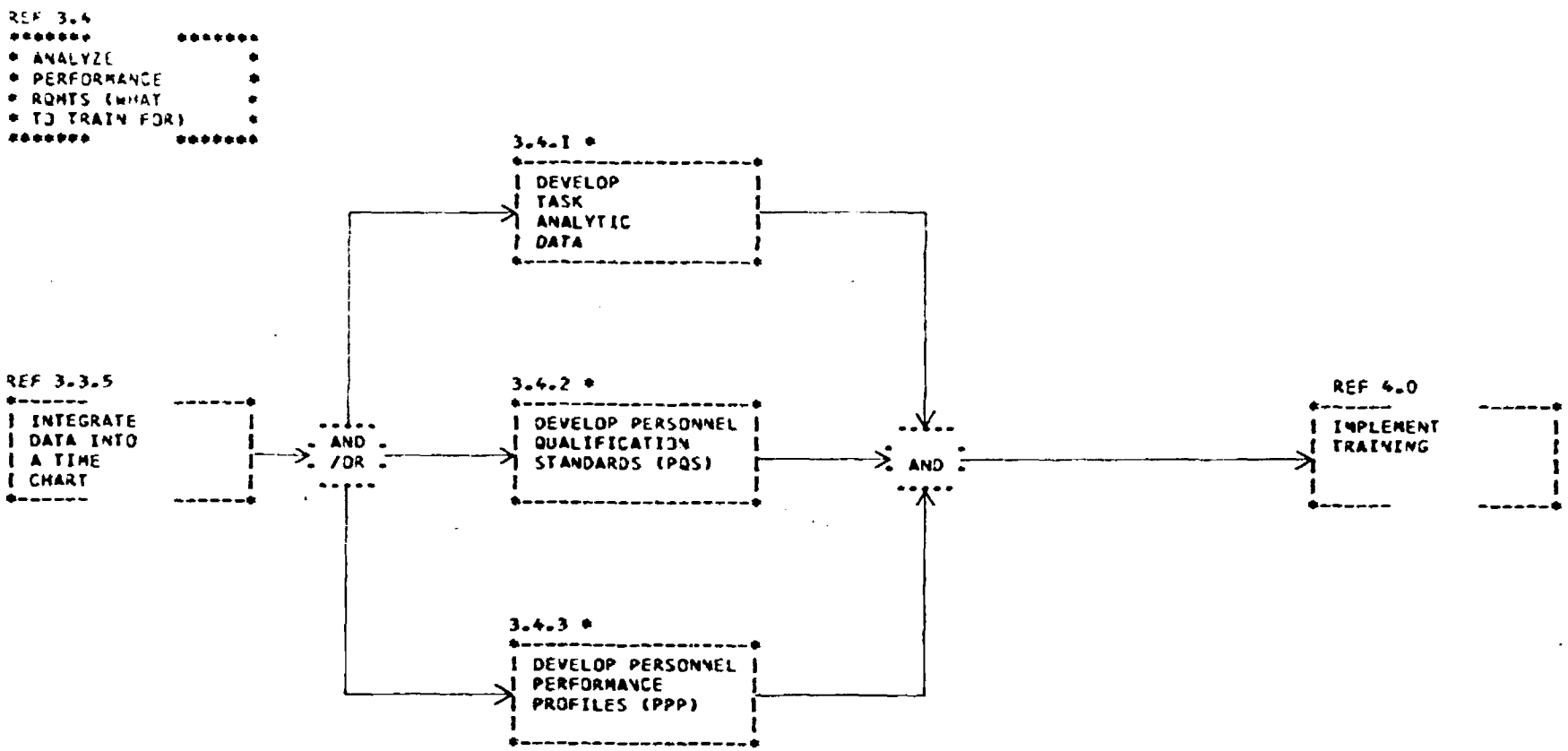

FIGURE VI 3.4-ANALYZE PERFORMANCE RQMTS (WHAT TO TRAIN FOR)

3.4.1 Develop Task Analytic Data

This is the generalized methodology for the common methods of performing task analysis in the naval personnel and training establishment. The job task analysis is primarily an inventory of job tasks/subtasks. The training task analysis is an evaluation of the job task analysis, designed to develop those items which must be in the course curriculum in order to prepare the student to perform his job.

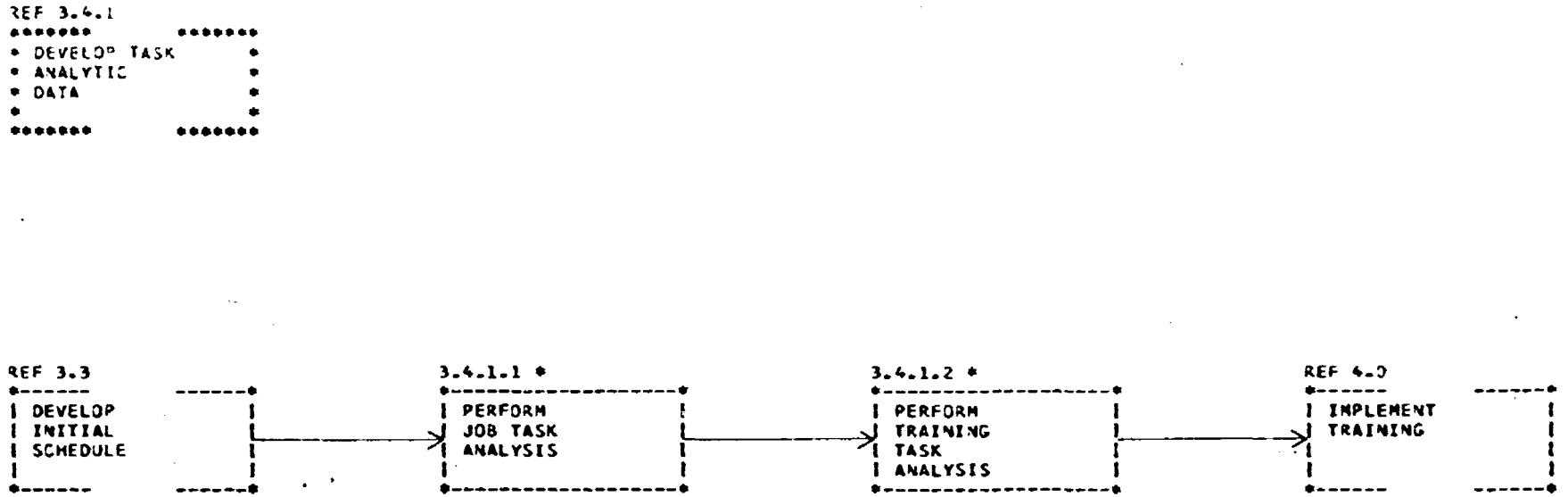

NOTE - THESE FLOWS DO NOT DIFFERENTIATE BETWEEN THE VARIETIES OF TASK ANALYSIS METHODS-SUCH AS NOTAP,MODIFIED TASK ANALYSIS,ETC.

FIGURE VI 3.4.1-DEVELOP TASK ANALYTIC DATA

3.4.1.1 Perform Job Task Analysis

This flow shows the sequence involved in the modified task analysis approach. The outcome is a computer print-out of various actions performed on specific items of hardware.

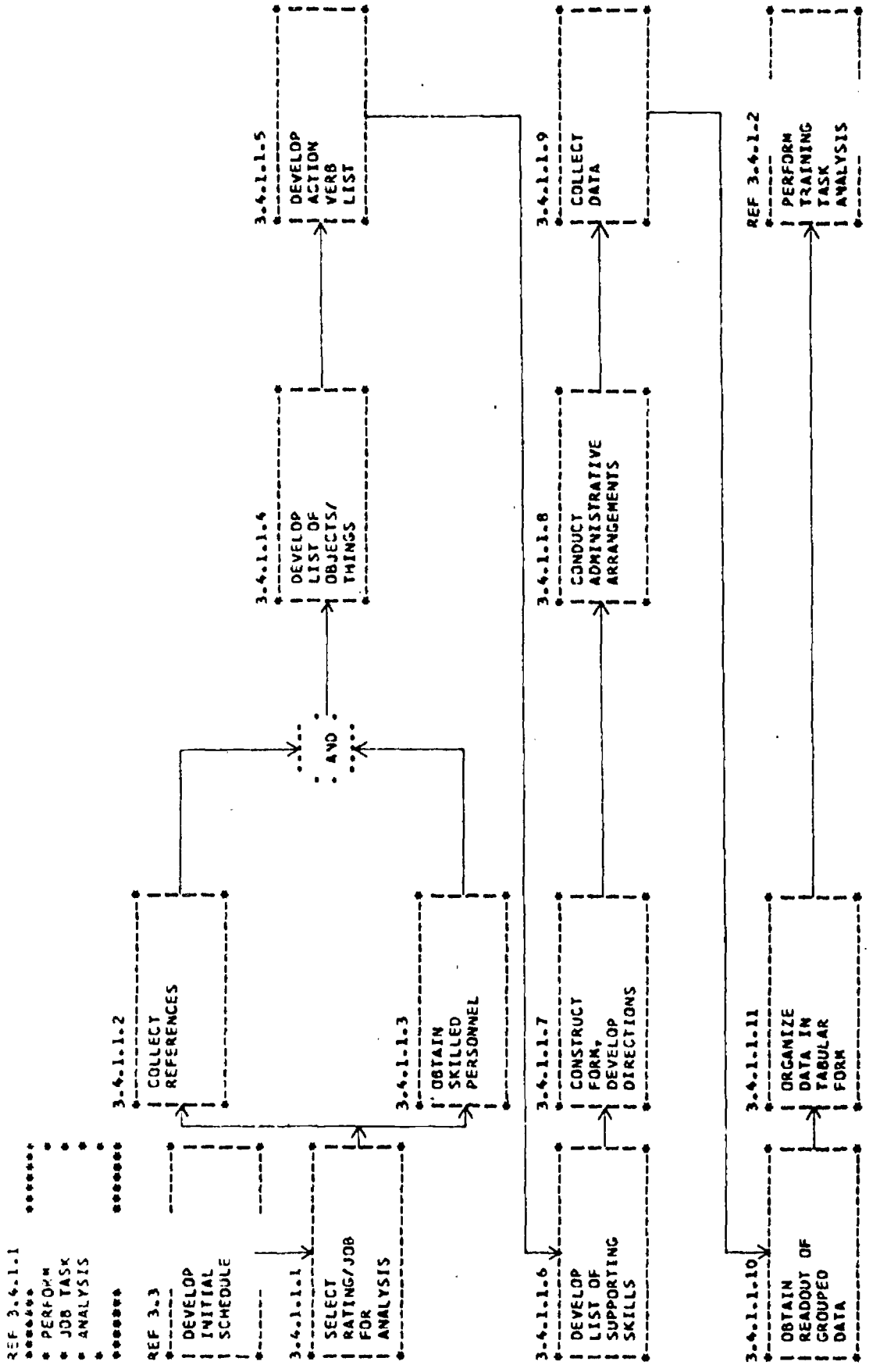

FIGURE VI 3.4.1.1-PERFORM JOB TASK ANALYSIS

3.4.1.2 Perform Training Task Analysis

The first task is to determine which of the analyzed tasks should be learned in a school situation or on-board. The tasks to be covered in school are broken into subtasks. These are further broken down into training elements. The elements are the basis for developing specific items to be covered in the course.

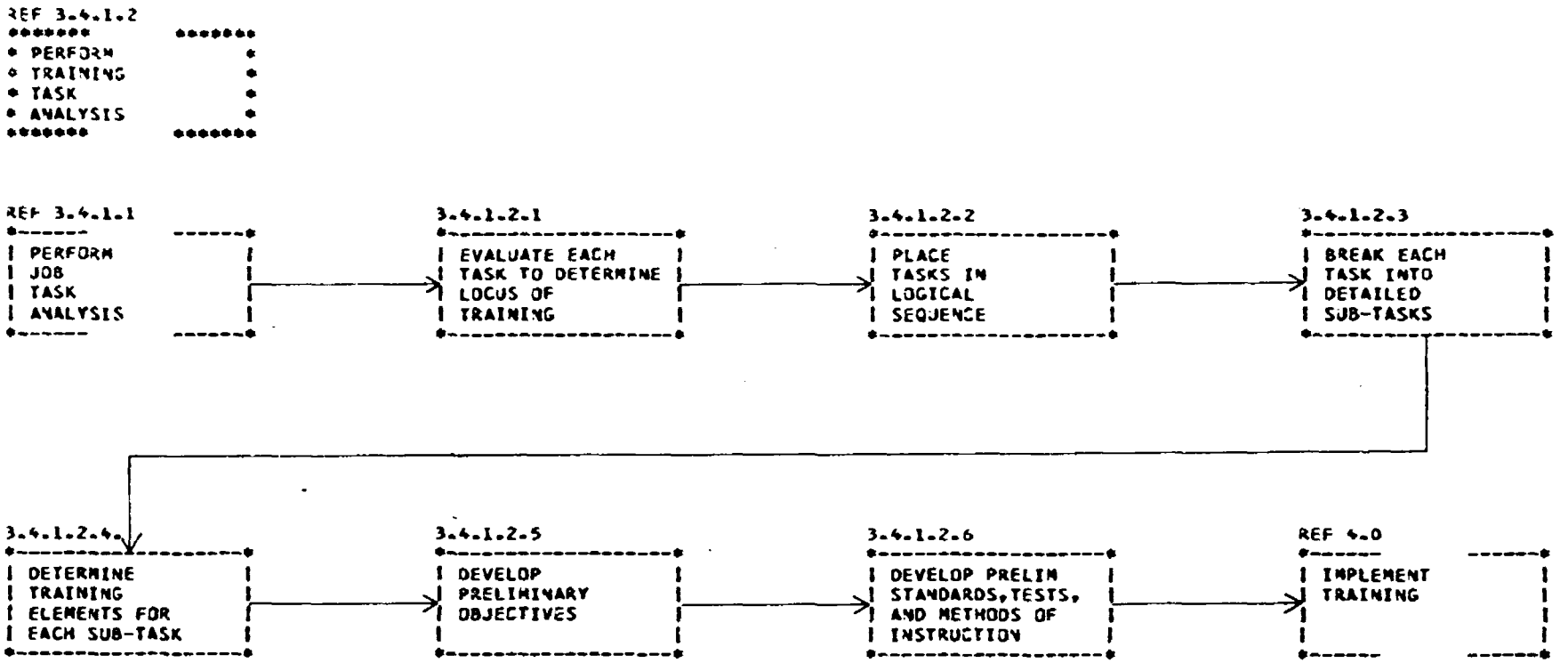

FIGURE VI 3.4.1.2-PERFORM TRAINING TASK ANALYSIS

3.4.2 Develop Personnel Qualification Standards (PQS)

The PQS are developed through a process of task analysis, although the objectives are not exactly the same as for task analysis. Also, there are some small differences in the approach. The largest such difference is in the fact that the PQS approach does not utilize extensive sampling of operational personnel through a questionnaire approach.

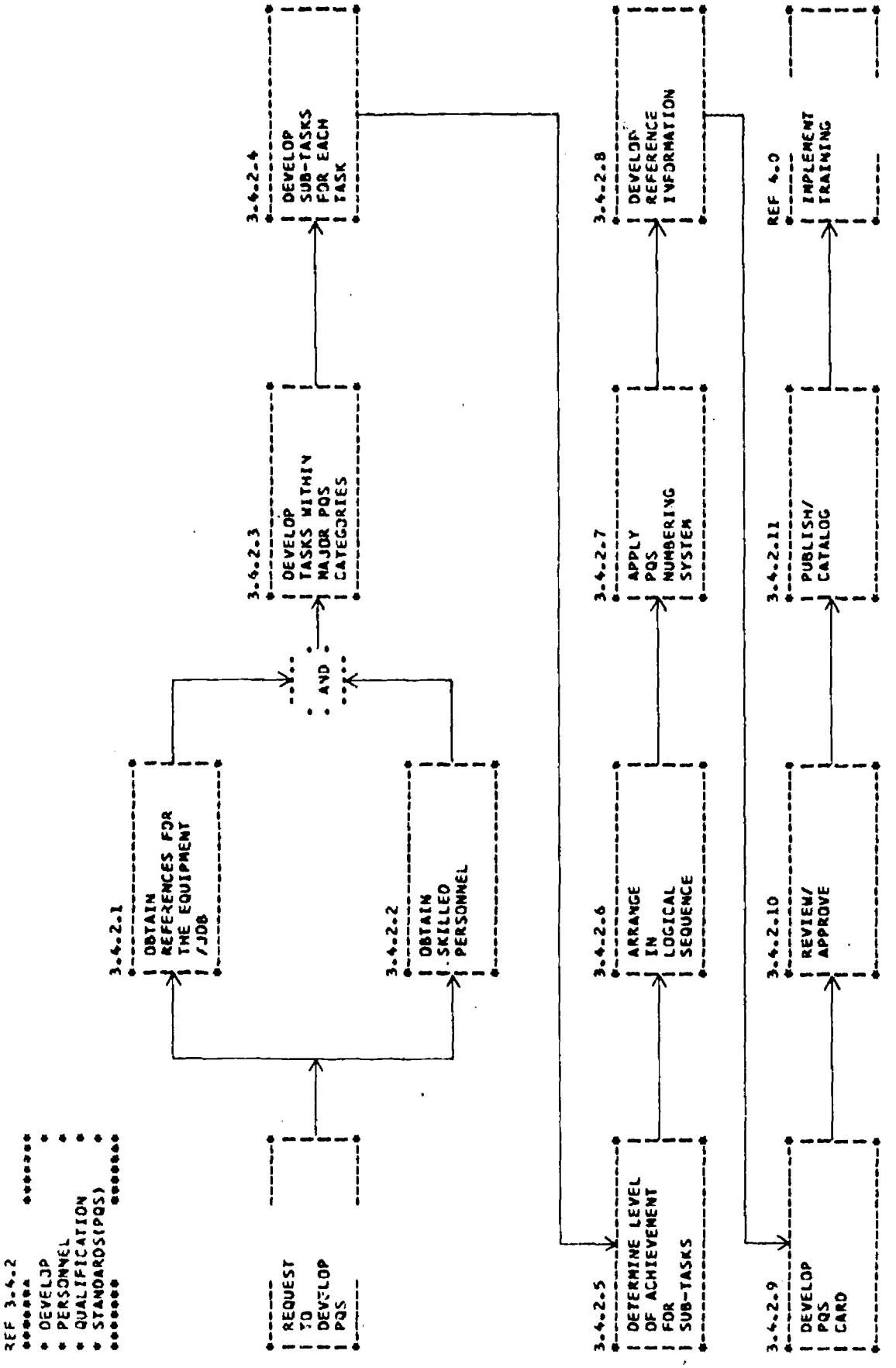

FIGURE VI 3.4.2-DEVELOP PERSONNEL QUALIFICATION STANDARDS (PQS)

3.4.3 Develop Personnel Performance Profiles (PPP)

This is a type of analytic effort used for submarine systems, subsystems, and equipments. The general specification for PPP is contained in WS-13581 (1 Jan. 1971). The PPP requirements for FBM Weapons Systems is found in NAVORD OD43180; for all other submarine systems in NAVTRA 38002 (Volume 1, Revision 1), 15 May 1972.

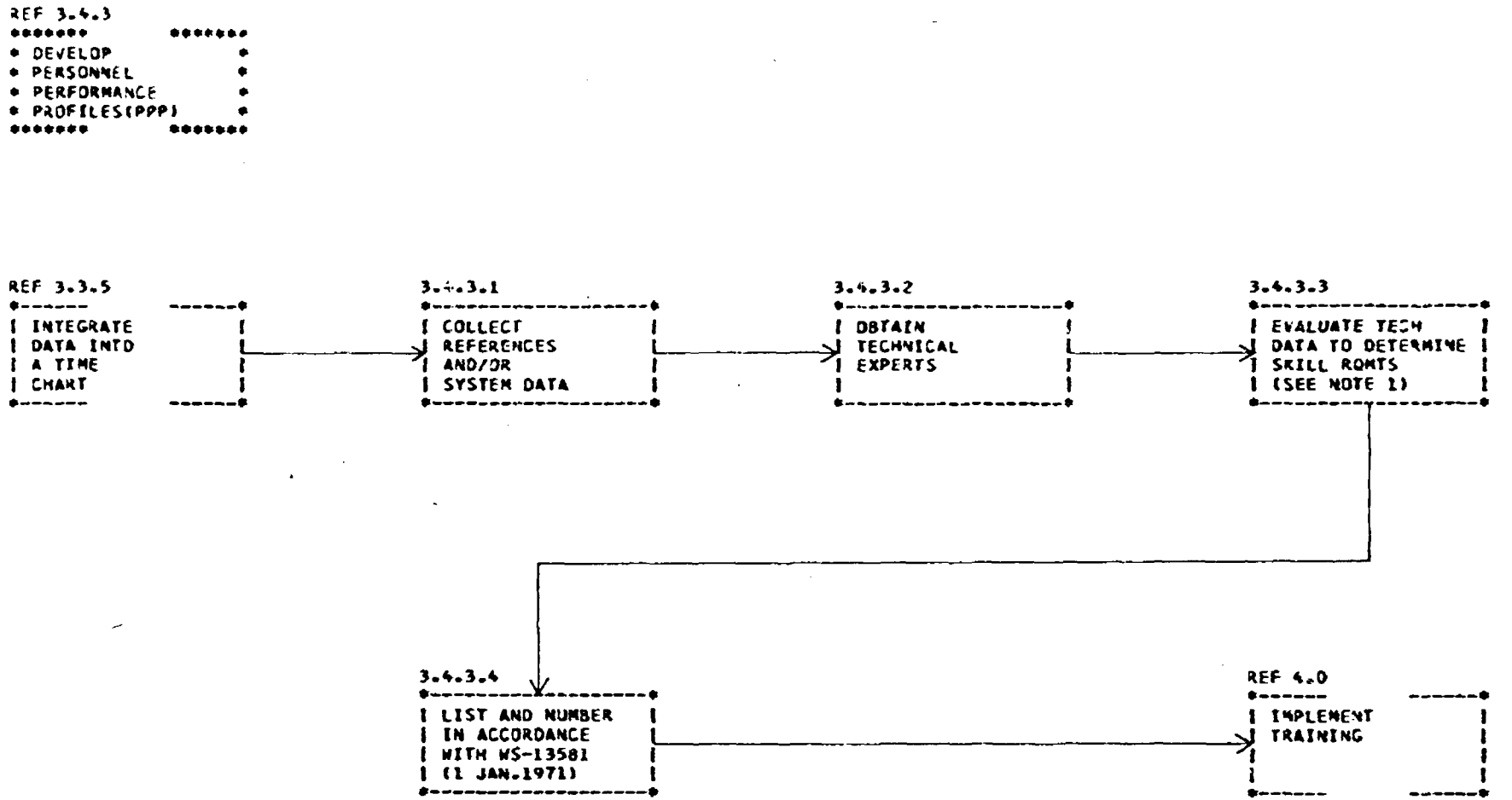

NOTE 1 - THIS BLOCK IS ESSENTIALLY THE SAME AS 3.4.1.2.4 - "DETERMINE TRAINING ELEMENTS FOR EACH SUBTASK."

FIGURE VI 3.4.3-DEVELOP PERSONNEL PERFORMANCE PROFILES(PPP)

3.5 Develop Training Plan

This is an over-view flow showing the sequence of tasks for developing a training plan.

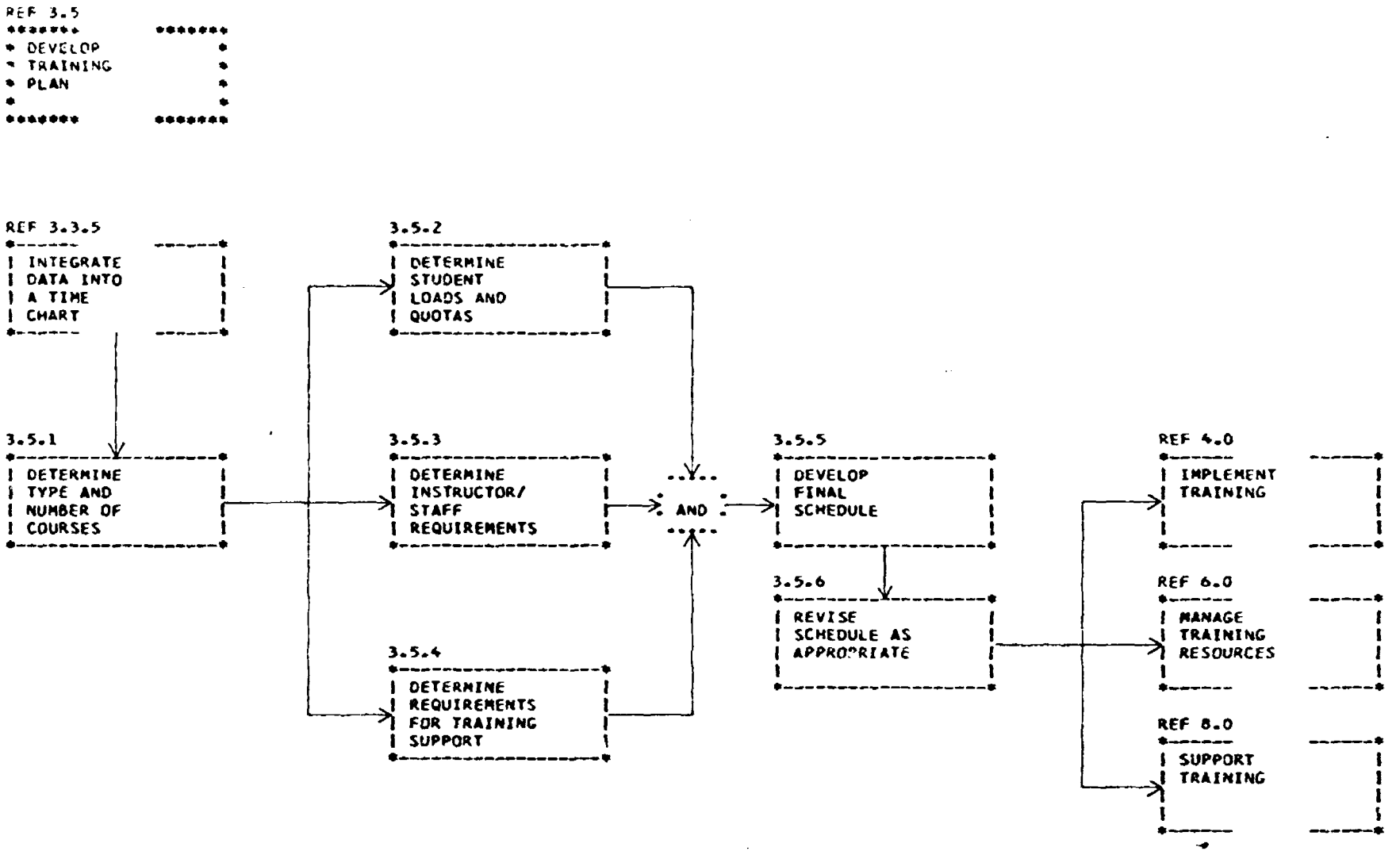

FIGURE VI 3.5-DEVELOP TRAINING PLAN

d. Summary of Major Technological Gaps and Problem Areas - Function 3.0 Analyze and Plan Training

1) The training establishment is not involved during the early (and crucial) stages of developing the training concept for new equipment or major modifications.

2) The planning process for training requires an update in methods to improve the effectiveness of training plans.

3) The modified task analysis, which is used predominantly, is a stop-gap measure.

4) The task analytic and PQS approaches seem to be on parallel paths. While small differences are apparent, the outputs are clearly similar.

5) The "Qualifications for Advancement in Rating" (NAVPERS 18068C) should be in sync with Task Analysis/PQS. There is an apparent separation between what the individual does on his job and what he must do/know in order to advance.

e. Idealized Approaches - Function 3.0 Analyze and Plan Training

Idealized approaches to this function involve those operations which optimize the analysis and planning procedures. Analysis involves the determination of the who, when, where, and what of training. Such analysis for new systems or modifications begins within the development cycle, and tends to be performed, largely, by the contractor. In the life cycle of a system there are four distinct phases:

I Conceptual
II Validation
III Full Scale Development
IV Production and Operational

Currently, there is no active involvement by the training system until the third phase -- Full Scale Development. However, significant events occur in the earlier two phases. These are shown in Figures VI 3.6 and VI 3.7. Those events relating directly to training operations are shown in blocks with accentuated black lines. It is evident that many significant training decisions are made early in the development cycle. For example, as described in NAVSHIPS 0900 060-0380:

"The Personnel and Training Plan describes the training required to achieve the skill levels set forth in the

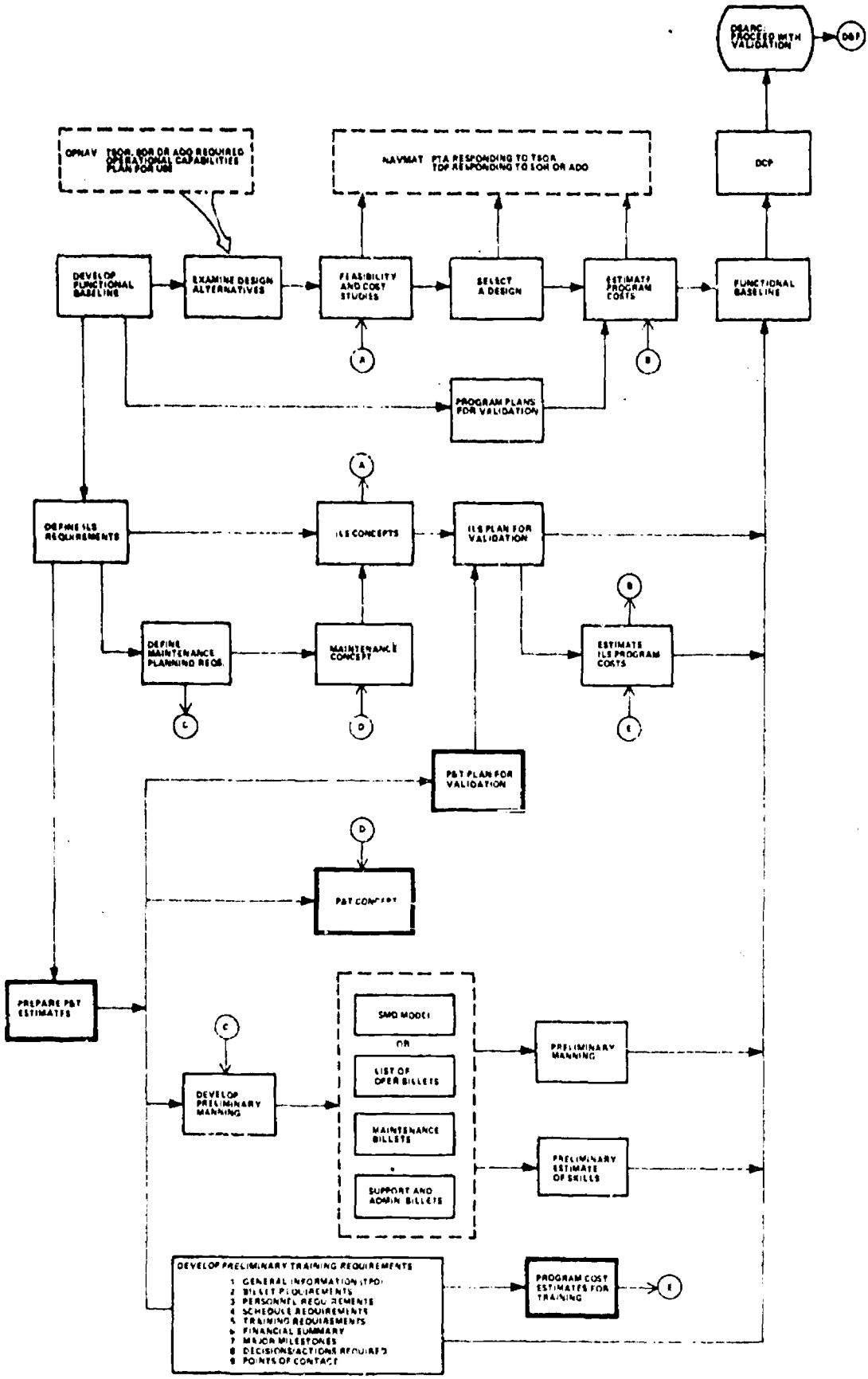

Figure VI 3.6 - Conceptual Phase (Phase I) of Ship Life Cycle (From NAVSHIPS 0900-060-0380)

determination of ship's manning. First, the skill requirements are defined in detail, assigning rates and NEC codes to personnel. Next, the formal training course requirements are identified, describing for each course the elements of the course depicted in [Figure VI 3.7]. The team training requirements for combat team training, and for propulsion team training ashore in recent ship developments, are identified. Of special significance to ship system design is the description of simulation requirements for conducting on board combat team training, in that hardware and software will normally be required for the specific purpose of simulating combat conditions."

Such outputs are largely the result of contractor analysis in fulfilling the data requirements of a hardware development. The training establishment does not get involved to any extent until the Naval Training Plans Conference (NTPC) is called. However, the NTPC is not held until the Validation Phase is completed.

It is necessary that representatives of the training system become involved much earlier than the NTPC. Such interaction should include early relationships with the Integrated Logistic Support (ILS) activities of the contractor. The closest connection should be in the task analytic effort and in the definition of needed personnel, training, and training equipment. In the earliest stages, liaison and comment on outputs could be sufficient. As the development proceeds, the involvement may become deeper. Of course all such interaction must be through the SYSCOM that has development responsibility.

Such early involvement will allow a longer planning and preparation cycle for training. Also, it will assure the development of realistic training plans in a much more effective manner than the current approach. This is a particular need in the case of relatively long lead items such as simulators or complex trainers.

The idealized system requires optimal planning. Aspects of "optimum" include: uniformity in planning across organizations, use of equal cost/usage and other factors, capability to include contingencies, and the capability to project into a future time period.

An initial requirement is a set of common planning factors for use by all elements of the NETS. Such factors must be centrally developed, maintained, and controlled. In addition uniform procedures for the utilization of these factors must be developed and made mandatory for all organizations.

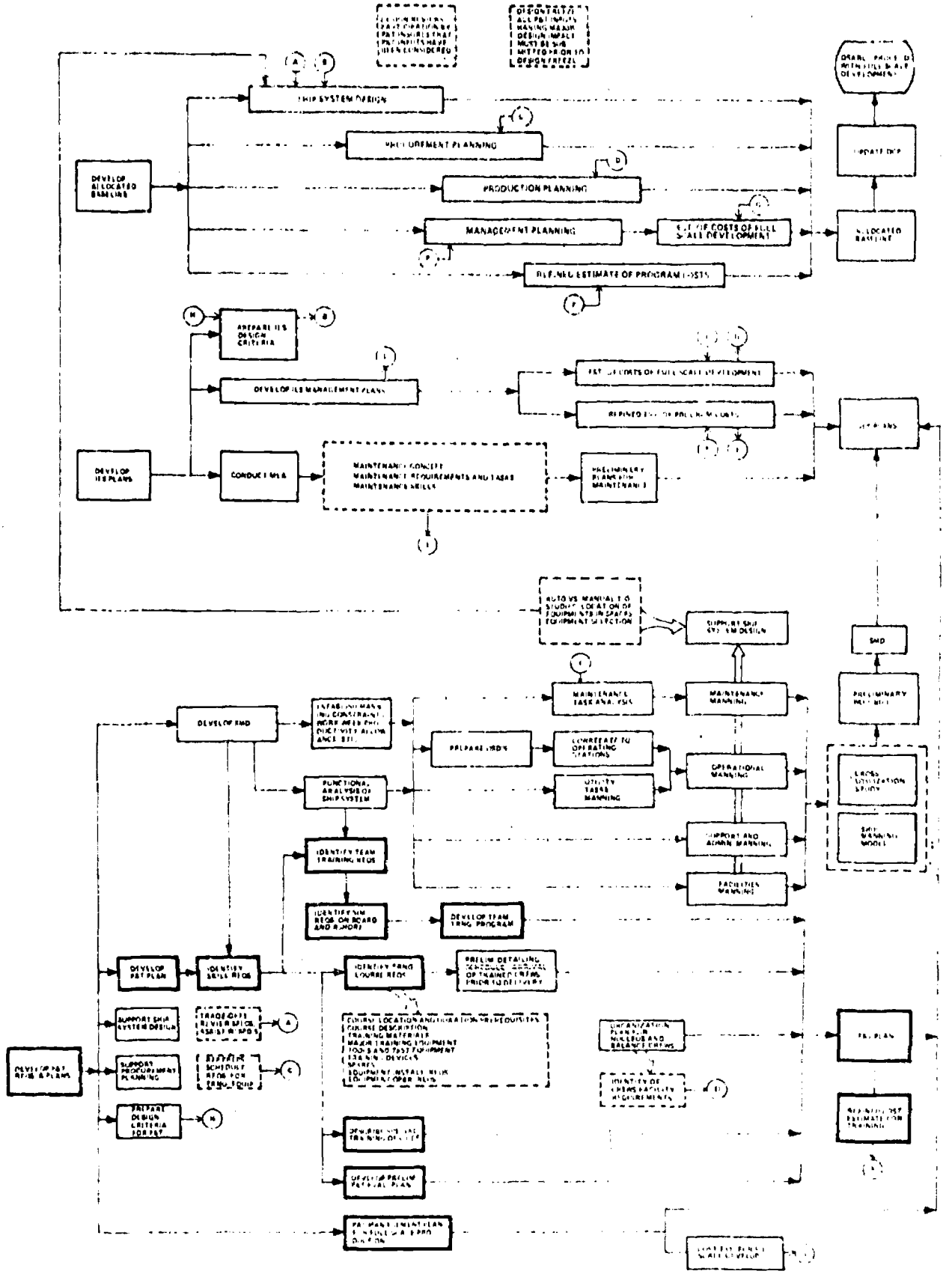

Figure VI 3.7 - Validation Phase (Phase II) of Ship Life Cycle (From NAVSHIPS 0900-060-0380)

Factors should, as applicable, be expressed in terms of ranges or sets with associated assumptions to permit the planner to develop alternatives or to revise plans. Alternatives, as well as projections, further require the usage of mathematical models and computer simulation. The use of such management tools would allow the projection of various kinds of situations which may be encountered in the future, or as a result of unforeseen or unpredictable events. As an example, contingencies may be planned in advance for:

increase in student load
decrease in student load
increase in course length
decrease in course length
change in staff strength
change in available resources.

By means of computer simulation, based upon an appropriate mathematical model, the expected effects of alternative approaches may be spelled out closely. The lack of such capability currently is a serious handicap to effective planning. This problem must be met for the future idealized system.

The idealized planning approach would always contain viable alternatives, each with a well defined resource plan and assumptional baseline.

Decisions made under those conditions would allow the evaluation of specifically defined assumptions. Since monitoring would include the determination of change in the assumptions, the process of controlling the implementation of such plans would become much easier.

In addition the use of computer simulation, together with appropriate factors, would allow full consideration of the cost-effectiveness for a wider range of alternatives in the area of training technology, i.e., classroom instruction vs on-the-job instruction, full task trainers vs part task trainers, film vs slides, etc., in order to achieve an optimal plan.

Another required characteristic of training plans for the idealized system is that the plan must spell out the means for expediting the fast learner and for helping the slow learner. Such strategy and tactics are based on the assumption that training is largely, if not completely, individualized. It is conceivable that ultimately such strategies may become standard operating procedures. But, until this happens, all planning must include these specifics.

The idealized approach to training is totally dependent upon an effective task analysis. The current approach to task analysis in the NETS is the modified task analysis. This is largely a type of task inventory, since the details of tasks to be performed are not specified. While this technique is a vast advance over what had been done previously, it cannot be considered to be ideal.

The ideal method requires the determination of which tasks/subtasks/actions must be performed and the development of standards of performance. Such determination must be done by a combination of methods such as consulting with the system designers; evaluating the maintenance engineering analytic data, reliability data, Operational Sequence Diagrams (OSD), etc. For new or modified systems/equipment, there is no other data. For hardware/systems in active use, there is additional information. Under such circumstances, the initial documentation should be used as the basis for interviews with operating personnel. Such interviews should determine: the extent to which all the required operations are performed, those actions which are performed that are not in the "required" category, problems encountered, frequency of operations, etc. Interviews should be on a sampling basis, but the sample should be developed to be representative, rather than random. The final output would be those tasks, subtasks, and actions which must be performed; the standards of achievement required; the references/manuals needed; the tools and support equipment needed; and any other pertinent information required to delineate the job under study. This kind of product essentially negates the need for a separate "training task analysis," since the details provide a direct basis for training.

Once the task analysis is completed, it may be updated as the result of feedback data, including operational and failure analysis from such approaches as the 3-M system, NAVSEC data, etc. Of course if a major modification occurs, the total analysis should be revalidated.

The methodology described is a rigorous, demanding one which requires the use of trained and experienced professional personnel. While some "subject matter" experts (operational personnel) should be involved as aids, they cannot perform the required analysis effectively. The time factor for such task analysis would not be significantly longer than for the technique used currently. The output would be more effective.

An approach such as the PQS technique clearly belongs to an idealized system. However, the duplication of analytic effort does not fit. A single integrated data base must be utilized. For the most part, the task analysis method described previously will suffice for PQS. If some parts of PQS should require extension or elaboration, this may be done readily as an integral part of the analysis.

This same base of analytic data should be the foundation for the advancement in rate examinations. Currently, a separate analysis is made, apparently, for the qualifications upon which the examinations are based. The idealized situation must not have this multi-track mode. The integrated task analysis approach would end the current separation between what the individual does on his job and what he must do and know in order to advance in rate. In the light of expected future social pressures to employ increased numbers of culturally deprived personnel, it is important to remove the possible impression that the examinations are artificial barriers to advancement. Making the job and the requirements for advancement in consonance will rectify this situation. In addition a rapprochement in analytic approaches is needed in order to save manpower and in order to prevent the possibility of disparate outputs.

4. Function 4.0 Implement Training

a. Definition

The Implement Training function covers all activities which are directly concerned with the instruction of students. Included is the preparation and evaluation of: instructional personnel, administrators, and curricula; as well as the actual operations of conducting and administering training.

The primary inputs to this function are training plans and task analytic data. The flows cover both the development of a new course and course revisions. For revisions, only parts of the sequence may apply. However, review of courses to determine if revision is needed should touch each of the subfunctions and tasks.

b. Description

The Implement Training function is described through an outline which contains all of the functional elements presented in the functional flows, and in addition through an overall functional flow, Figure VI 4.0 - Implement Training.

	Page
4.0 Implement Training	111
4.1 Develop Curriculum Outline	114
4.1.1 Determine Topics to be Included	116
4.1.1.1 Evaluate List of Potential Topics	
4.1.1.2 Eliminate Duplications, Consolidate Overlaps	
4.1.1.3 Organize Topics in Logical Sequences	
4.1.2 Determine Sequence of Topics	118
4.1.2.1 Analyze Topic Relationships	
4.1.2.2 Determine Logical Order of Presentation	
4.1.2.3 Arrange Topics in Logical Sequence	
4.1.2.4 Eliminate Redundancy	
4.1.2.5 Revise Sequence	
4.1.2.6 Review Topic Sequence	
4.1.3 Determine Specific Objectives	120
4.1.3.1 Analyze Each Topic	
4.1.3.2 Determine Logical Objective(s) for Each	
4.1.3.3 Evaluate Initial List of Objectives	
4.1.3.4 Eliminate Redundancies/Overlaps	
4.1.3.5 Arrange Objectives in Sequence by Topic	
4.1.3.6 Re-evaluate New Listing of Objectives	
4.1.3.7 Revise Objectives and/or Sequence	

Page

4.1.4 Determine Method(s) of Presentation 122
4.1.4.1 Evaluate Potential Methods 124
4.1.4.1.1 Determine Advantages/Disadvantages of Each Method
4.1.4.1.2 Determine Resources Needed for Each Method
4.1.4.1.3 Estimate Lead Time for Each Method
4.1.4.2 Evaluate Topics/Objectives for Best Presentation Method(s)
4.1.4.3 Determine if Some Method(s) is/are Precluded 126
4.1.4.3.1 Determine Policy on Methods
4.1.4.3.2 Determine if a Method is Inapplicable
4.1.4.3.3 Determine if a Method is Particularly Suitable
4.1.4.3.4 Eliminate Method From Consideration
4.1.4.4 Designate Each Topic With Method(s) to be Used
4.1.5 Determine Method(s) of Evaluation 128
4.1.5.1 Consider Potential Methods of Evaluation
4.1.5.2 Evaluate Best Method(s) of Testing for Each Objective
4.1.5.3 Select Evaluation Method(s) for Each Objective
4.2 Develop Course Details 130
4.2.1 Develop Instructor Guide 132
4.2.1.1 Determine Points to be Covered for Each Topic
4.2.1.2 Determine Method(s) for Presenting Points in Each Topic
4.2.1.3 Determine Support Material(s) and Training Aids Required
4.2.1.4 Determine Time per Topic
4.2.1.5 Determine Test Methods
4.2.2 Develop Lesson Plans
4.2.3 Develop Student Guides
4.2.4 Develop Requirements for Training Aids . . . 134
4.2.4.1 Select Topics/Points for Elaboration/Augmentation
4.2.4.2 Determine Type of Aid(s)
4.2.4.3 Develop Descriptive Details
4.2.4.4 Develop the Aid(s)
4.2.4.5 Send Details to Support Center
4.2.4.6 Evaluate Completed Aid(s)
4.2.4.7 Revise as Required
4.2.5 Develop Programmed Instruction 136
4.2.5.1 Analyze for Feasibility of Application
4.2.5.2 Recheck Objectives and Revise as Needed

Page

4.2.5.3 Write Objectives (if Course is New)
4.2.5.4 Develop Detailed Outline
4.2.5.5 Develop Frame Items
4.2.5.6 Develop Criterion Tests
4.2.5.7 Integrate into Trial Series
4.2.5.8 Administer to Group for Test
4.2.5.9 Evaluate Test Output
4.2.5.10 Revise as Needed
4.2.5.11 Submit for Approval
4.2.5.12 Submit for Publication
4.2.6 Develop Testing Approaches
4.3 Develop Personnel 138
4.3.1 Develop Administrators 140
4.3.1.1 Obtain School Training in Administration
4.3.1.2 Obtain On-the-Job Training
4.3.1.3 Obtain Job Experience in Administration
4.3.1.4 Receive Evaluation and Guidance
4.3.1.5 Receive Additional Administrative Training
4.3.1.6 Receive Reassignment
4.3.2 Develop Instructors 142
4.3.2.1 Attend Instructor Training Course
4.3.2.2 Obtain Job Experience as an Instructor
4.3.2.3 Obtain Job Experience as an Instructor "Aide"
4.3.2.4 Receive Additional Training as an Observer/Auditor in Class
4.3.2.5 Evaluate Instructors
4.3.3 Develop Learning Supervisors
4.3.4 Develop Programmed Instruction Course Writers
4.3.5 Develop Education Specialists
4.4 Conduct Training 144
4.4.1 Orient Class
4.4.2 Present Overview of the Course
4.4.3 Distribute Initial Handouts
4.4.4 Describe Approaches to be Taken
4.4.5 Conduct Class Sessions
4.4.6 Monitor, Appraise, Counsel 146
4.4.6.1 Keep Record of Student Progress
4.4.6.2 Maintain Informal Checks With Students
4.4.6.3 Look for Signs of Falling Behind
4.4.6.4 Determine Potential Slow Students
4.4.6.5 Determine Individual Problem Areas
4.4.6.6 Evaluate Course Content
4.4.6.7 Determine Potential Training/Performance Aids

Page

4.4.6.8 Keep Available for Counseling - at Student's Initiative
4.4.6.9 Call In Students With Possible Problems
4.4.6.10 Explore the Nature of the Problem
4.4.6.11 Aid Student in Developing Alternative Approaches
4.4.6.12 Suggest Other Options
4.4.6.13 Terminate Counseling Session
4.4.6.14 Follow-Up
4.4.7 Complete Class Presentations
4.4.8 Evaluate Course (Conduct and Content)
4.5 Evaluate Training (Testing) 148
(Conventional Tests
4.5.1 Develop Test Outline(s)
4.5.2 Develop Test Items
4.5.3 Administer Tests 150
4.5.3.1 Develop Scoring Method
4.5.3.2 Develop Test Instructions
4.5.3.3 Develop Secure Test Procedures
4.5.3.4 Administer the Test
4.5.3.5 Grade the Test
4.5.3.6 Analyze Test Data
4.5.4 Evaluate Items (Item Analysis) 152
4.5.4.1 Record Item Data
4.5.4.2 Calculate Percent Wrong for Each Choice
4.5.4.3 Calculate Discrimination Index
4.5.4.4 Develop Item Selection Criteria - Cut-Off Point
4.5.4.5 Apply Selection Criteria
4.5.4.6 Revise Items - Discard Poor Ones
(Criterion Tests)
4.5.5 Analyze Course Objectives
4.5.6 Develop Specific Criteria for Each Objective
4.5.7 Develop Standard(s) of Achievement
4.5.8 Develop Evaluation Methods 154
4.5.8.1 Develop Optimal Method of Determining Achievement
4.5.8.2 Apply the Method
4.5.8.3 Evaluate the Method
4.5.8.4 Revise As Needed
4.6 Administer Training 156
4.6.1 Manage Resources 158
4.6.1.1 Develop Cost Inputs
4.6.1.2 Determine Operating Costs
4.6.1.3 Determine Rates of Expenditure
4.6.1.4 Develop Needs for Additional Resources
4.6.2 Manage Students 160
4.6.2.1 Enroll Students
4.6.2.2 Administer Student Logistical Needs

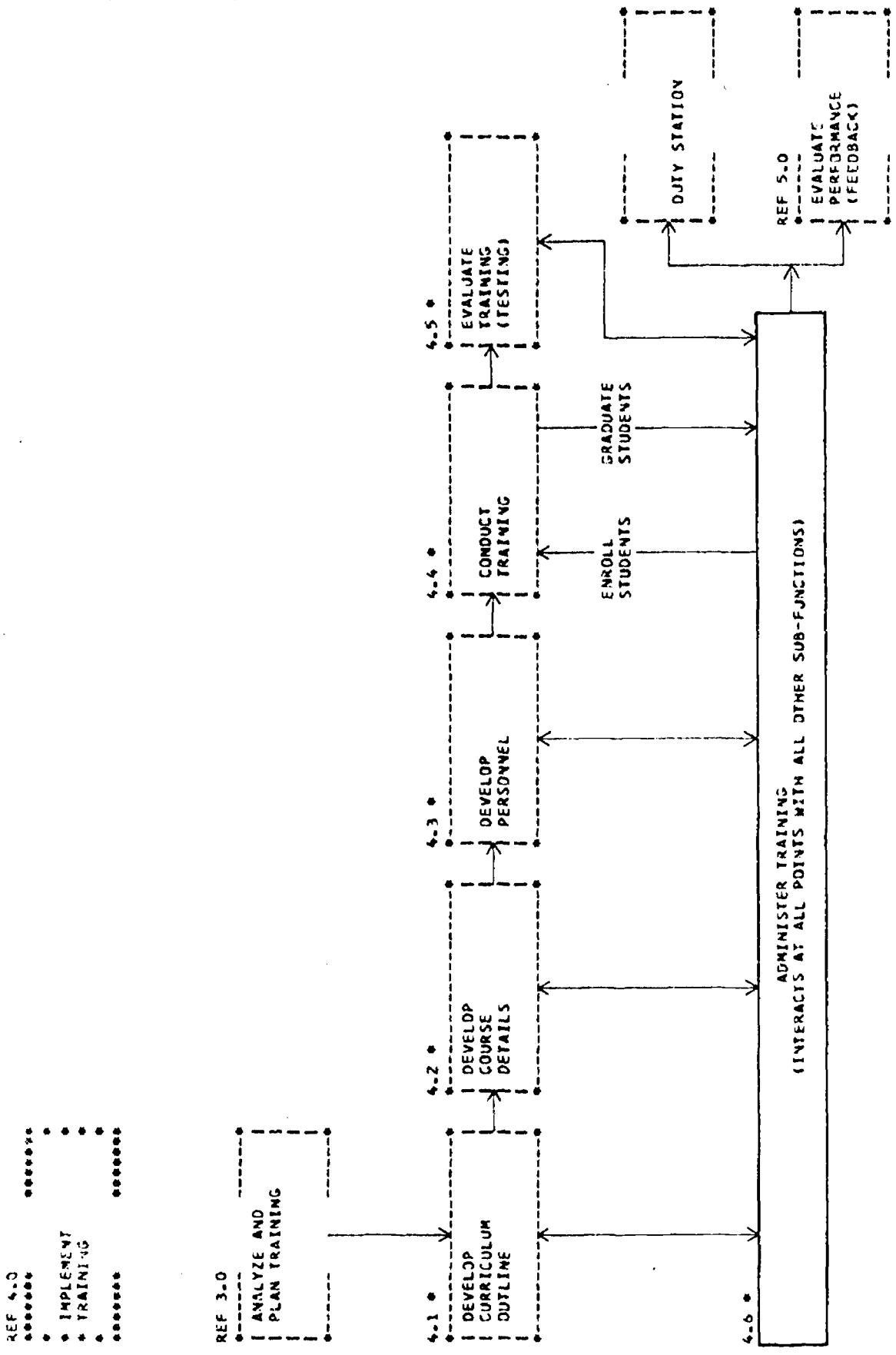

FIGURE VI 4.0-IMPLEMENT TRAINING

Page

4.6.2.3 Record Student Data
4.6.2.4 Discipline Students
4.6.2.5 Set Back Students
4.6.2.6 Disenroll Students
4.6.2.7 Graduate Students
4.6.3 Manage Operations 162
4.6.3.1 Implement/Develop Policy
4.6.3.2 Acquire Staff Personnel
4.6.3.3 Train Staff Personnel
4.6.3.4 Counsel Staff Personnel
4.6.3.5 Evaluate Staff Personnel
4.6.3.6 Reassign Staff Personnel
4.6.4 Manage Data 164
4.6.4.1 Tabulate Operational Data
4.6.4.2 Prepare/Maintain Up-to-Date Charts/ Graphs
4.6.4.3 Develop Required Data Inputs to Higher HQ
4.6.4.4 Develop Statistical Studies of Operating Conditions

c. Functional Description of NETS - Function 4.0 Implement Training

A general description of this function was presented in the outline and top-level flow of the preceding section. Further detail is shown in this section through a series of flows which expand key subfunctions. In addition to notes within the flows that elaborate on significant points, a general discussion of the flow is contained on the facing page.

4.1 Develop Curriculum Outline

The curriculum outline, containing an overview of what will be in the course is an essential initial step. While, currently, not all courses have task analytic data, that vital input is included since it is the intent and objective that ultimately all courses will be so based.

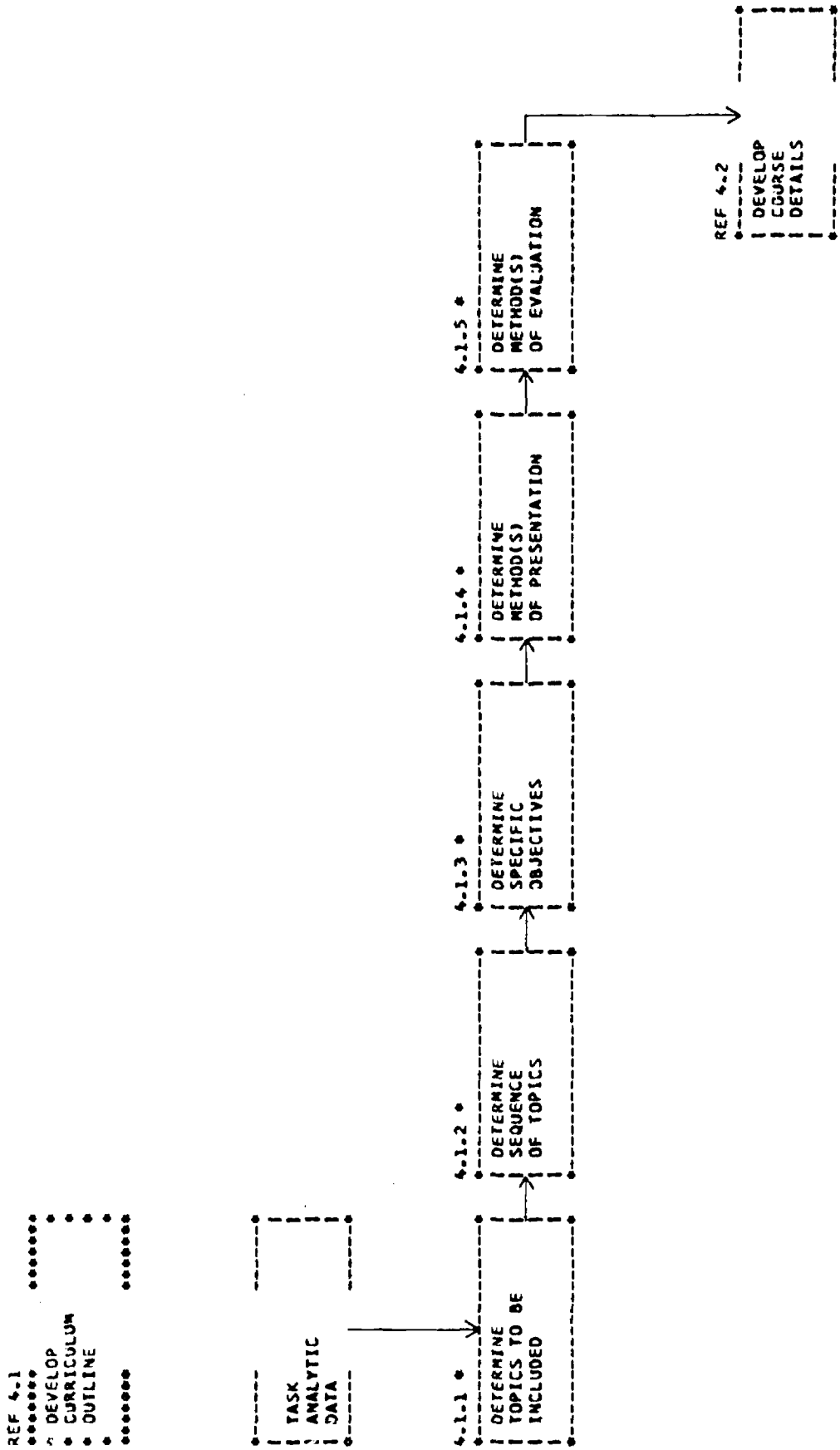

FIGURE VI 4.1-DEVELOP CURRICULUM OUTLINE

4.1.1 Determine Topics to be Included

The start of the outline is to develop an initial listing of broad topics. This is based on an evaluation of the task analytic data.

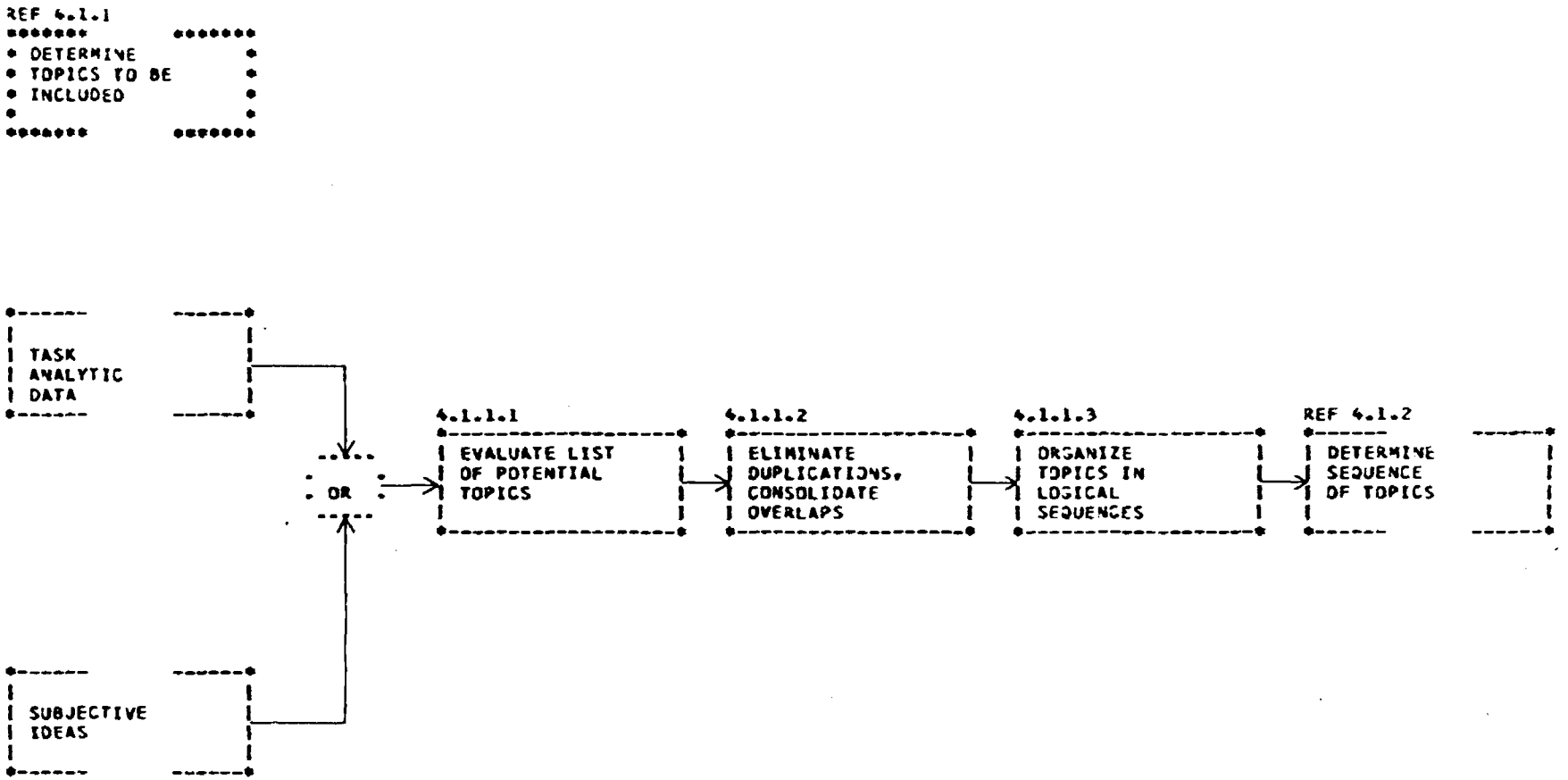

FIGURE VI 4.1.1-DETERMINE TOPICS TO BE INCLUDED

4.1.2 Determine Sequence of Topics

The sequence is a logical relationship which builds from an introduction of fundamental concepts, through more complex ideas, to the total tie-in of all concepts.

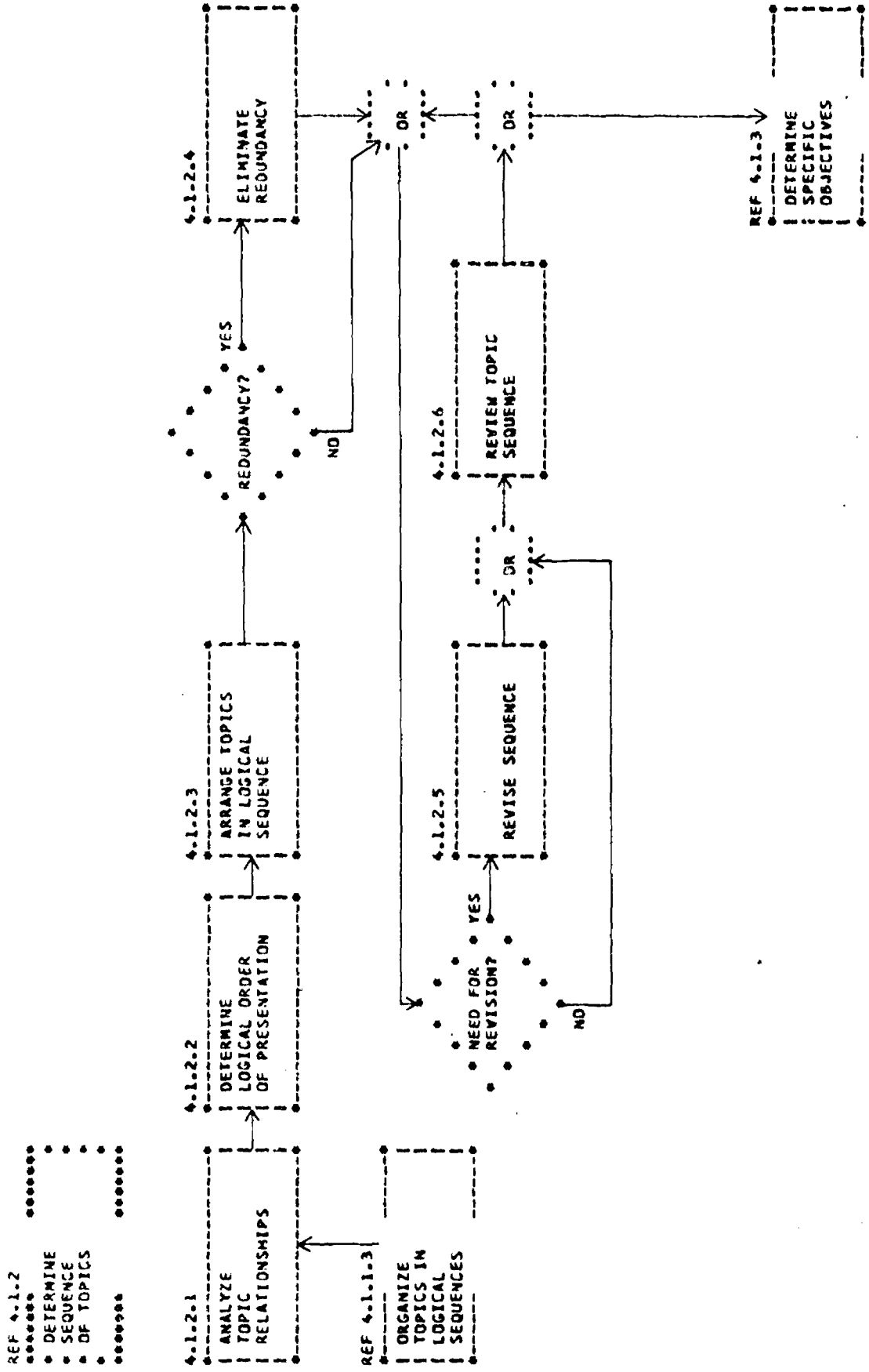

FIGURE VI 4.1.2-DETERMINE SEQUENCE OF TOPICS

4.1.3 Determine Specific Objectives

Major objectives are ideally behavioral objectives, including standards for their evaluation. While in some instances behavioral objectives are being used, the majority approach is broadly as described here.

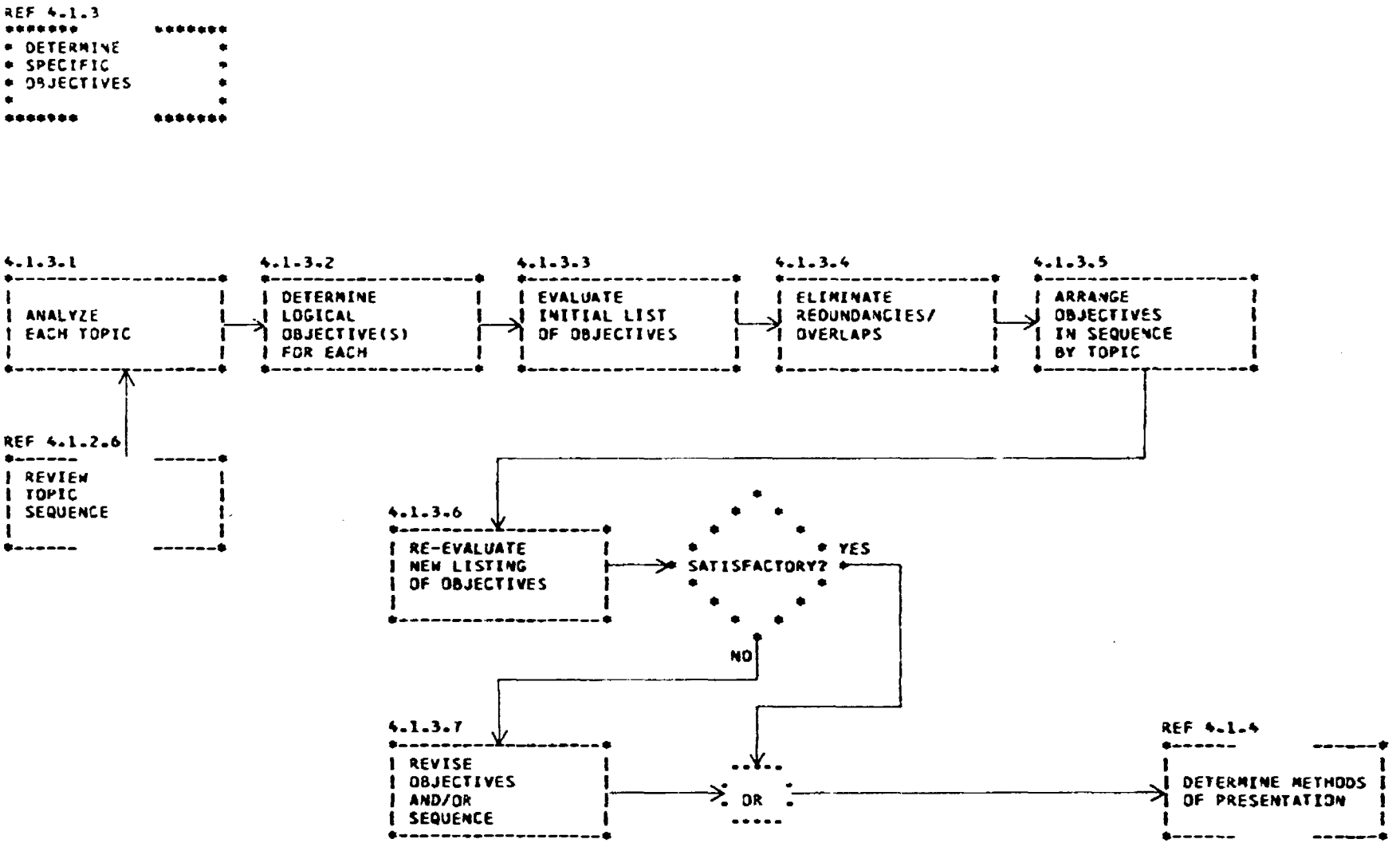

FIGURE VI 4.1.3-DETERMINE SPECIFIC OBJECTIVES

4.1.4 Determine Method(s) of Presentation

The significance of this flow is self-evident. It emphasizes the fact that different presentation methods may be required for different kinds of instructional situations.

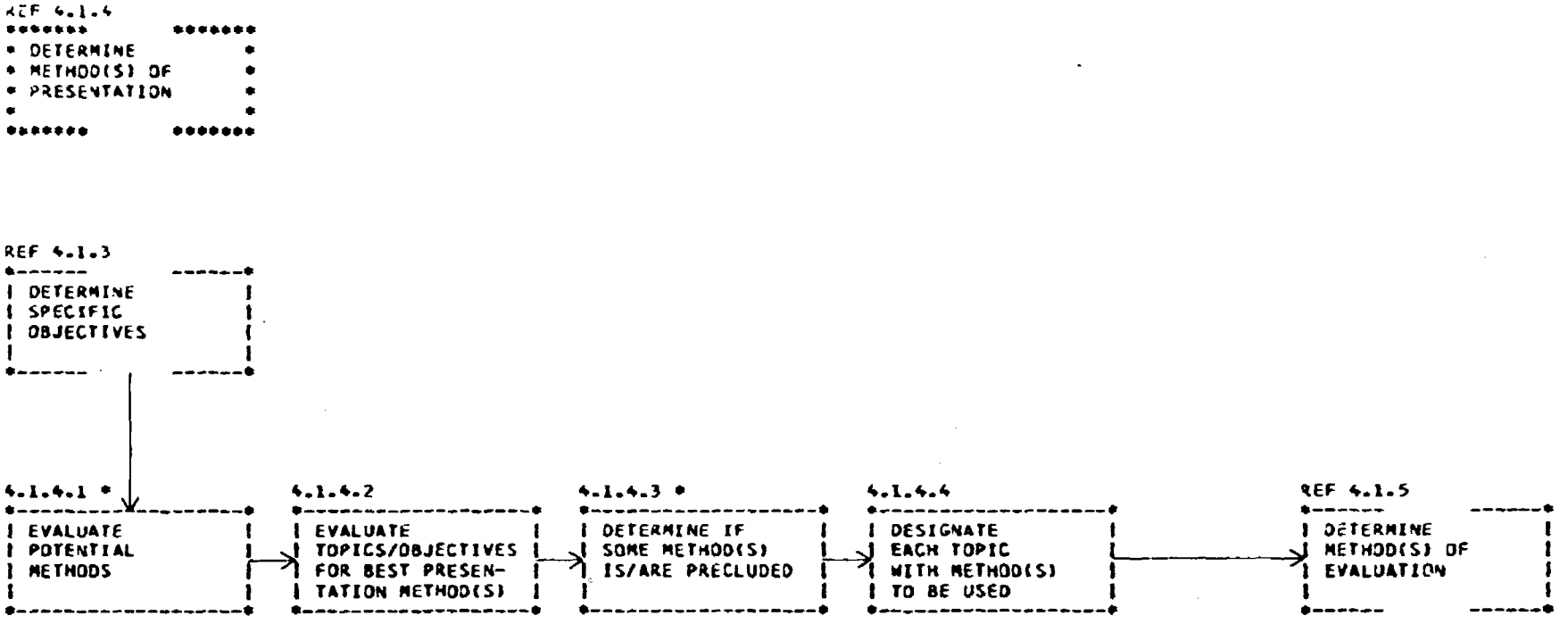

FIGURE VI 4.1.4-DETERMINE METHOD(S) OF PRESENTATION

4.1.4.1 Evaluate Potential Methods

This flow emphasizes the need to use a systematic evaluation of the potential methods. This will help to reduce bias and, if followed periodically, will assure a constant reexamination of methodology.

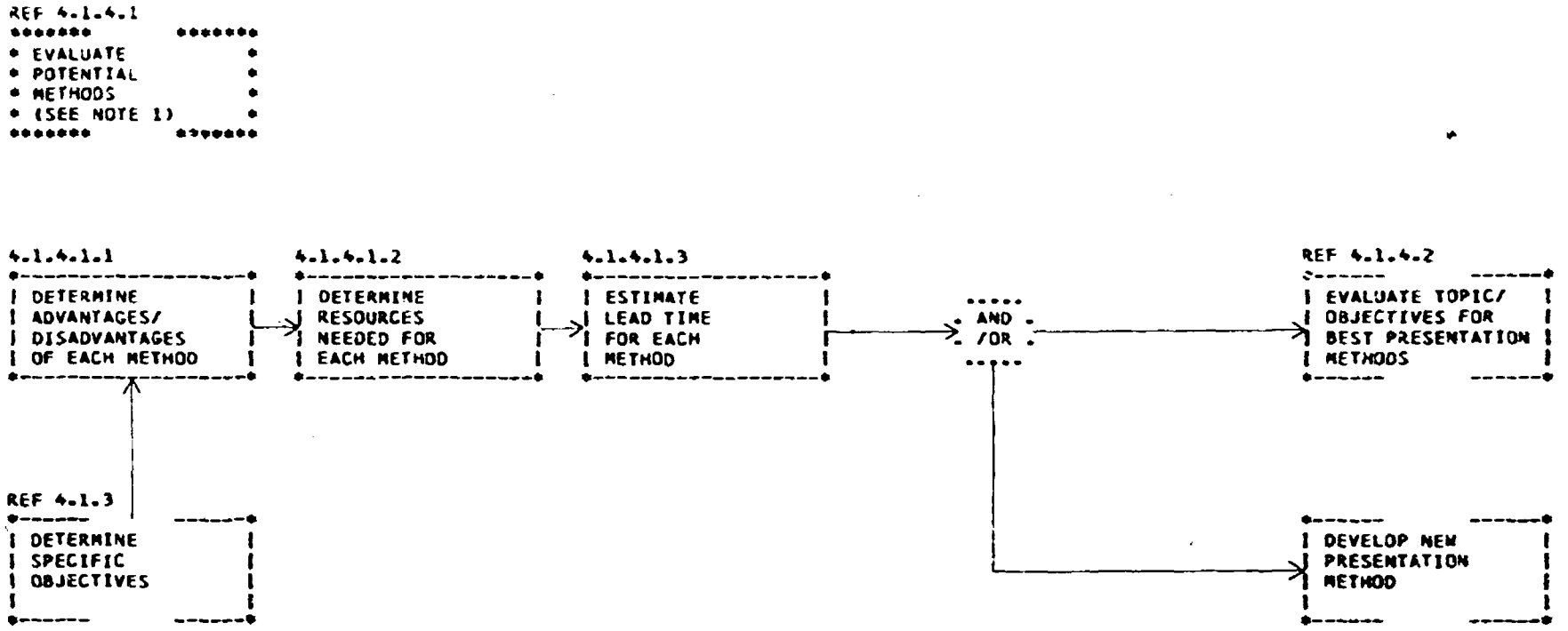

NOTE 1 - METHODS INCLUDE INDIVIDUALIZED INSTRUCTION, CONVENTIONAL INSTRUCTION, CMI, CAI. MODULAR APPROACH, MULTIMEDIA, ETC.

FIGURE VI 4.1.4.1-EVALUATE POTENTIAL METHODS

4.1.4.3 Determine if Some Method(s) is/are Precluded

Policy may preclude the use of methods. Other methods may be ruled out as a result of the kind of instruction, resources available, or state-of-the-art.

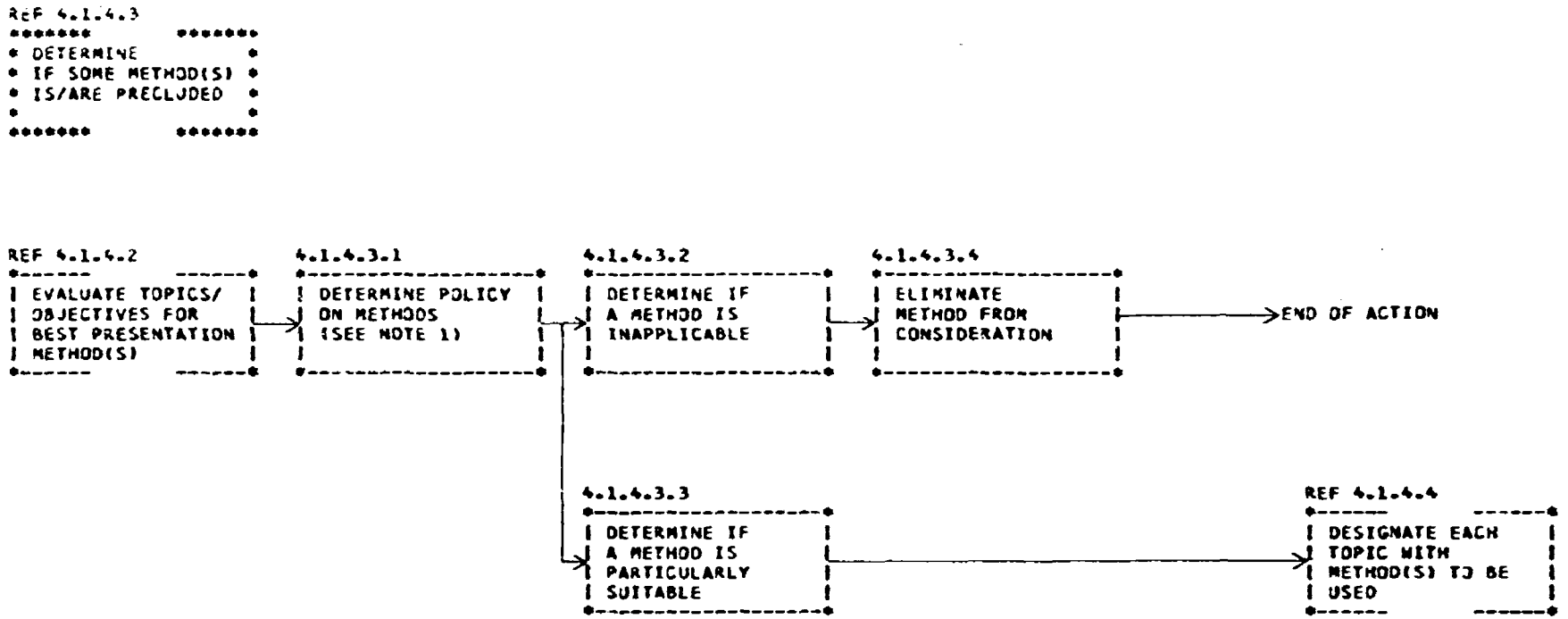

NOTE 1 - CNET POLICY IS THAT INDIVIDUALIZED SELF-PACED INSTRUCTION WILL BE USED TO A MAXIMUM EXTENT.

FIGURE VI 4.1.4.3-DETERMINE IF SOME METHOD(S) IS/ARE PRECLUDED

4.1.5 Determine Method(s) of Evaluation

Systematic selection of evaluation methods is required also. For a variety of situations, no one method is applicable across the board. Ideally behavioral objectives should be the basis for testing and criterion tests should be used as completely as possible.

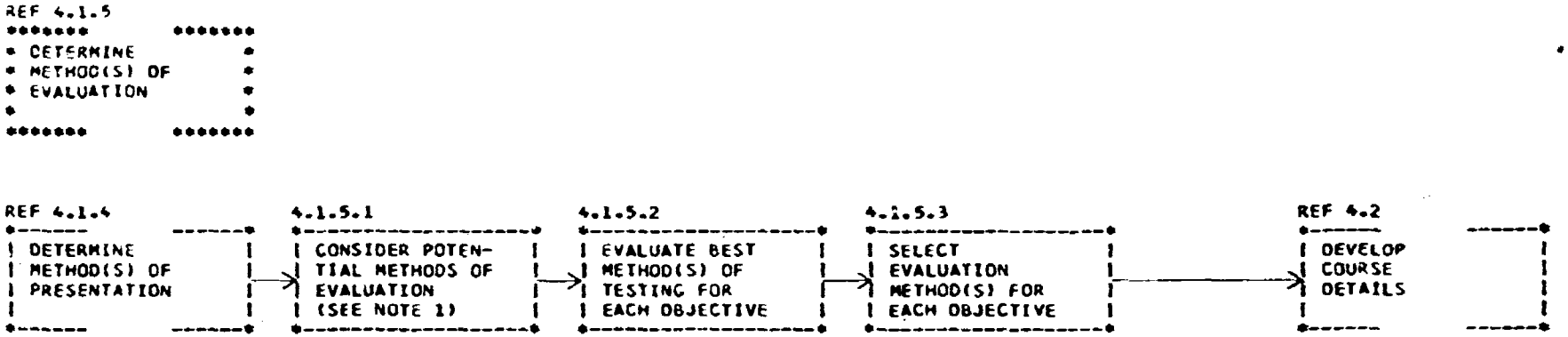

NOTE 1-EVALUATION METHODS INCLUDE ESSAY EXAM, MULTIPLE CHOICE, T-F, MATCHING, COMPLETION, ETC.
A MAJOR DIFFERENCE IN TYPE OF EVALUATION IS BETWEEN CRITERION TESTING AND STATISTICAL TESTING.

FIGURE VI 4.1.5 DETERMINE METHOD(S) OF EVALUATION

4.2 Develop Course Details

For conventional instruction, the Instructor Guide presents the major details of the course. The lesson plans present specific details for each class session, while student guides consist of handouts and/or "laboratory" worksheets.

Details for programmed instruction or other individualized instruction consist of outlining the essential points to be made, the method of presenting/reinforcing each point, and the method of allowing the learner to self evaluate his progress.

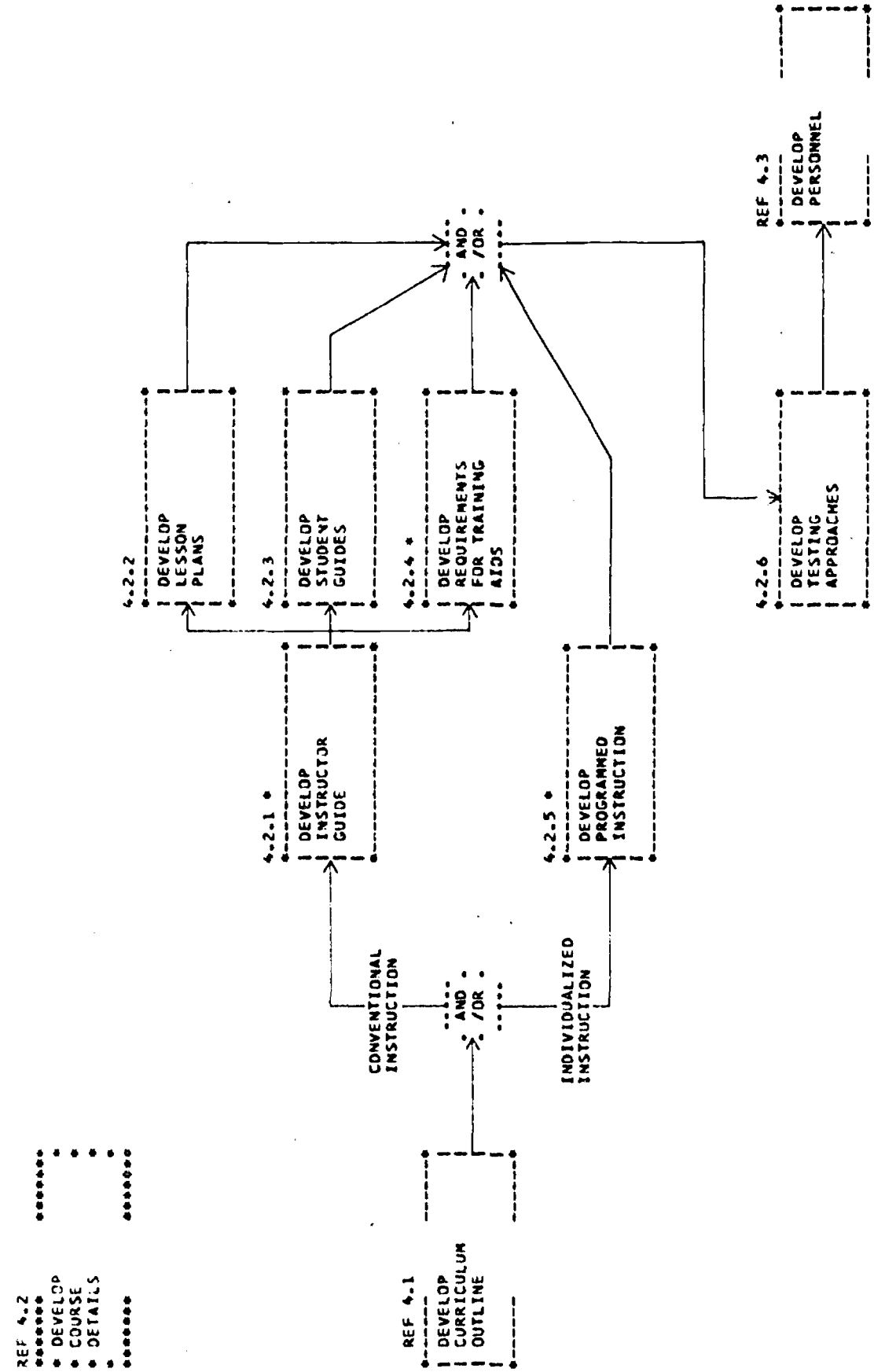

FIGURE VI 4.2-DEVELOP COURSE DETAILS

4.2.1 Develop Instructor Guide

This is an essential item for conventional instruction. For individualized instruction, a parallel guide, perhaps to be called "Learning Supervisor's Guide" is needed. This should summarize the course, emphasize need for support and counseling of students, show how to keep student records, administrative requirements, etc.

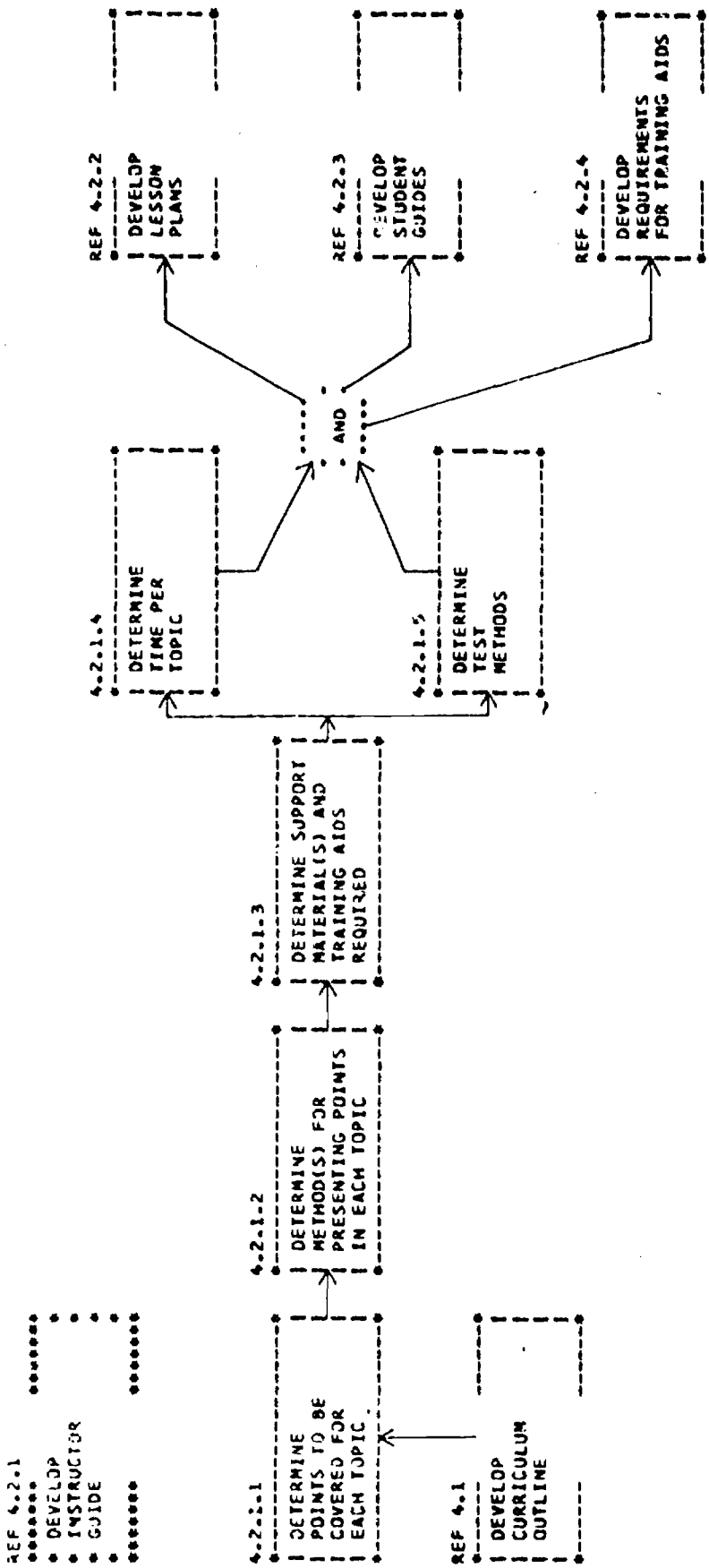

FIGURE VI 4.2.1-DEVELOP INSTRUCTOR GUIDE

4.2.4 Develop Requirements for Training Aids

This flow shows the subfunctions and sequence to develop aids or details of needs for aids. These may be means of helping the learning process and/or means of assisting/expediting job performance.

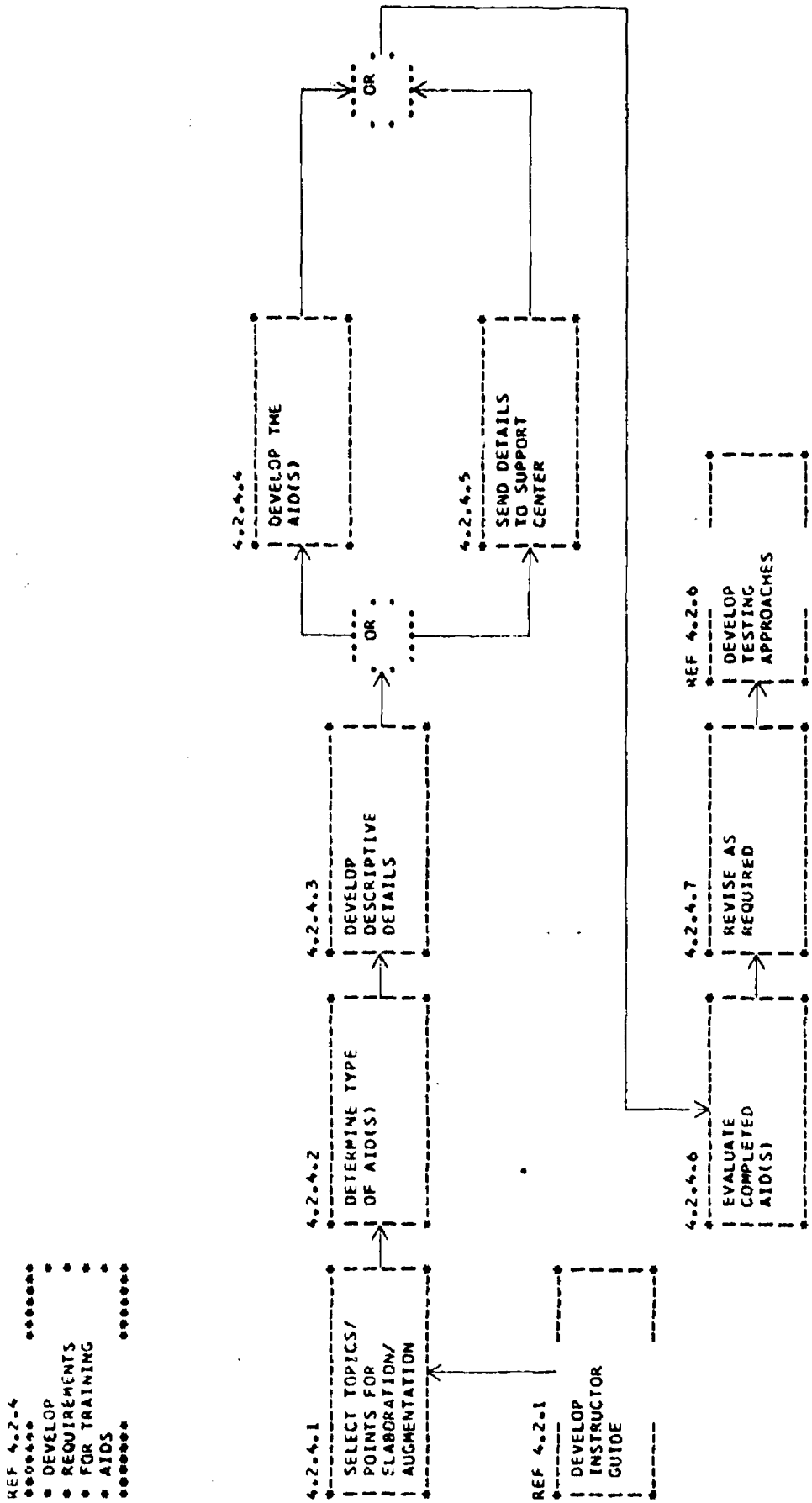

FIGURE VI 4.2.4-DEVELOP REQUIREMENTS FOR TRAINING AIDS

4.2.5 Develop Programmed Instruction

This flow contains some elements which were not observed and are probably not being performed currently. Consequently, to an extent this represents idealization.

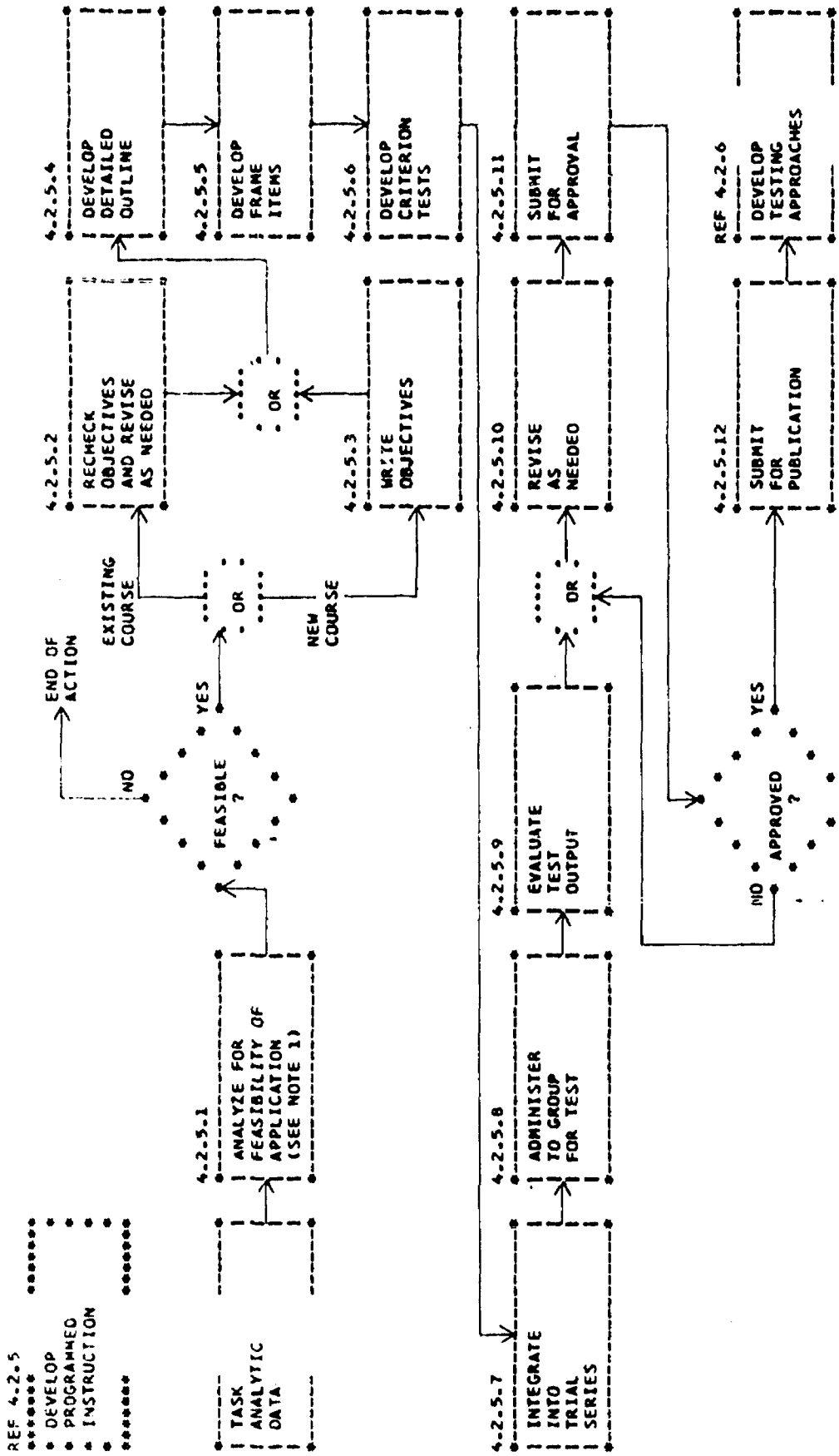

NOTE 1—THIS ASSUMES THAT COORDINATION HAS BEEN MADE THROUGH CNTS TO ASSURE THAT THERE IS NO OTHER PUBLICATION OR PROGRAM WHICH MAY BE SUITABLE.

FIGURE VI 4.2.5—DEVELOP PROGRAMMED INSTRUCTION

4.3 Develop Personnel

The developing of personnel is a recurring need and is fundamental to the successful and effective operation of a training organization.

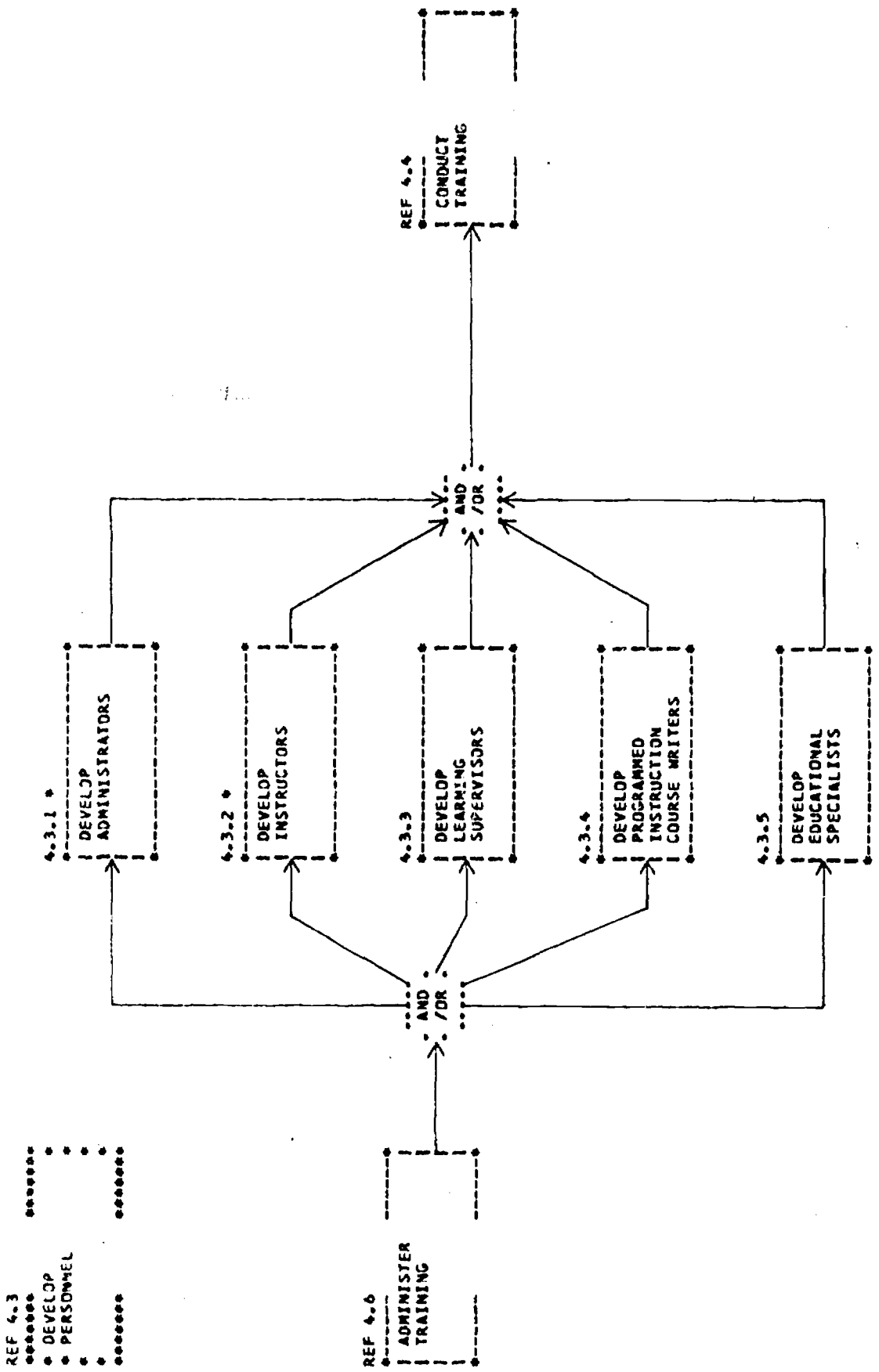

FIGURE VI 4.3-DEVELOP PERSONNEL

4.3.1 Develop Administrators

Not all personnel assigned to administrative duties go to school. Even those that have had an appropriate course require supervision and monitoring for some time on the job until reasonable proficiency can be expected. An excellent guide for administrators in their general management duties is the application of the educational self audit. This is contained in NAVTRASUPP Form No. 2; CHNAVTRASUPP; Pensacola, Florida.

This guide would be equally useful to Educational Specialists, both for assisting in the training of new personnel and in the administrative aspects of their assignments.

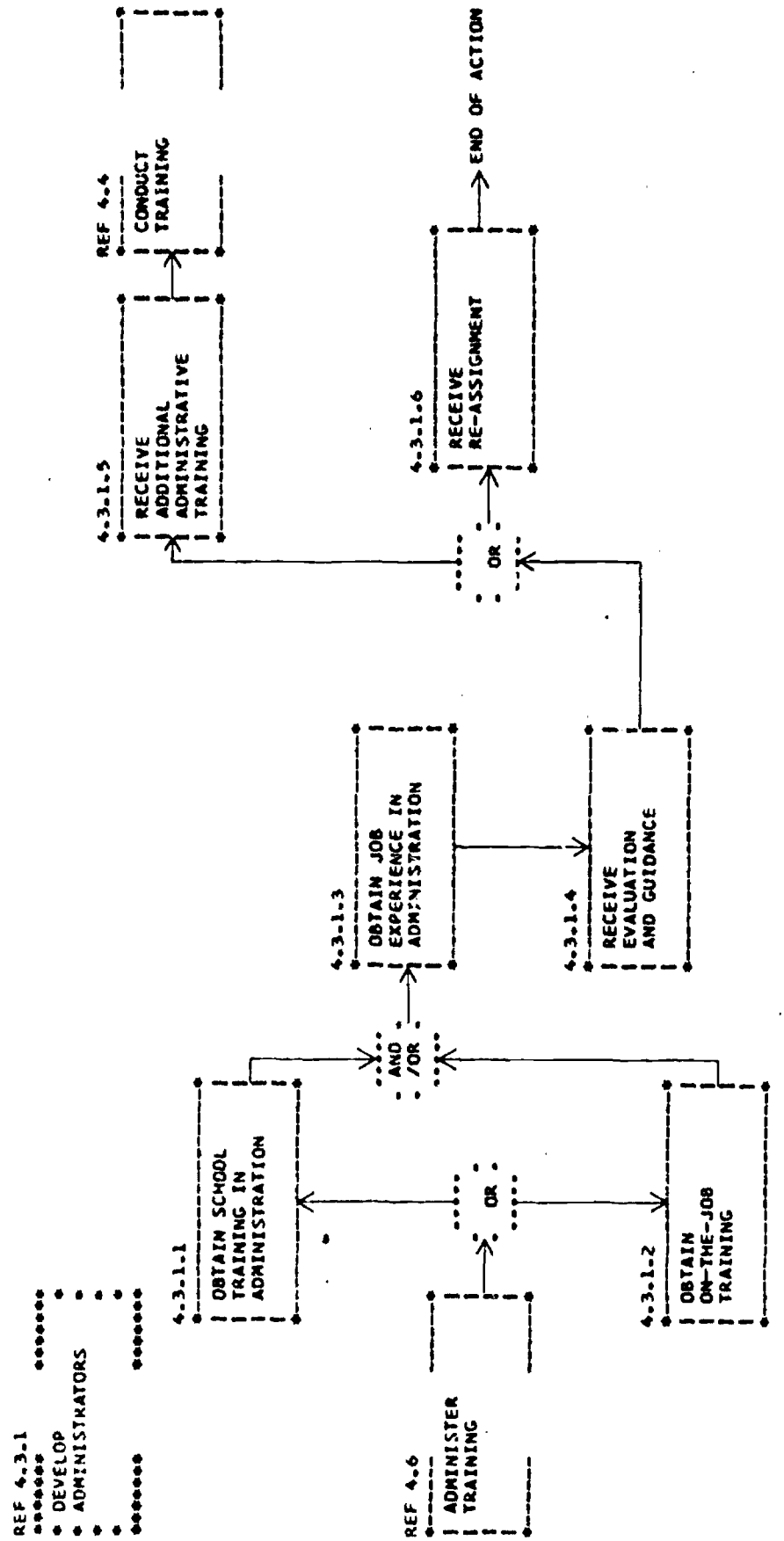

FIGURE VI 4.3.1-DEVELOP ADMINISTRATORS

4.3.2 Develop Instructors

There is wide disparity in the way instructor personnel are handled. The common variations are shown in the flow. An ideal combination would be somewhere between 4.3.2.3 and 4.3.2.4, where the "instructor apprentice" is auditing the course and acting part-time as an aide, but not taking over on his own until being "certified" by his supervisors.

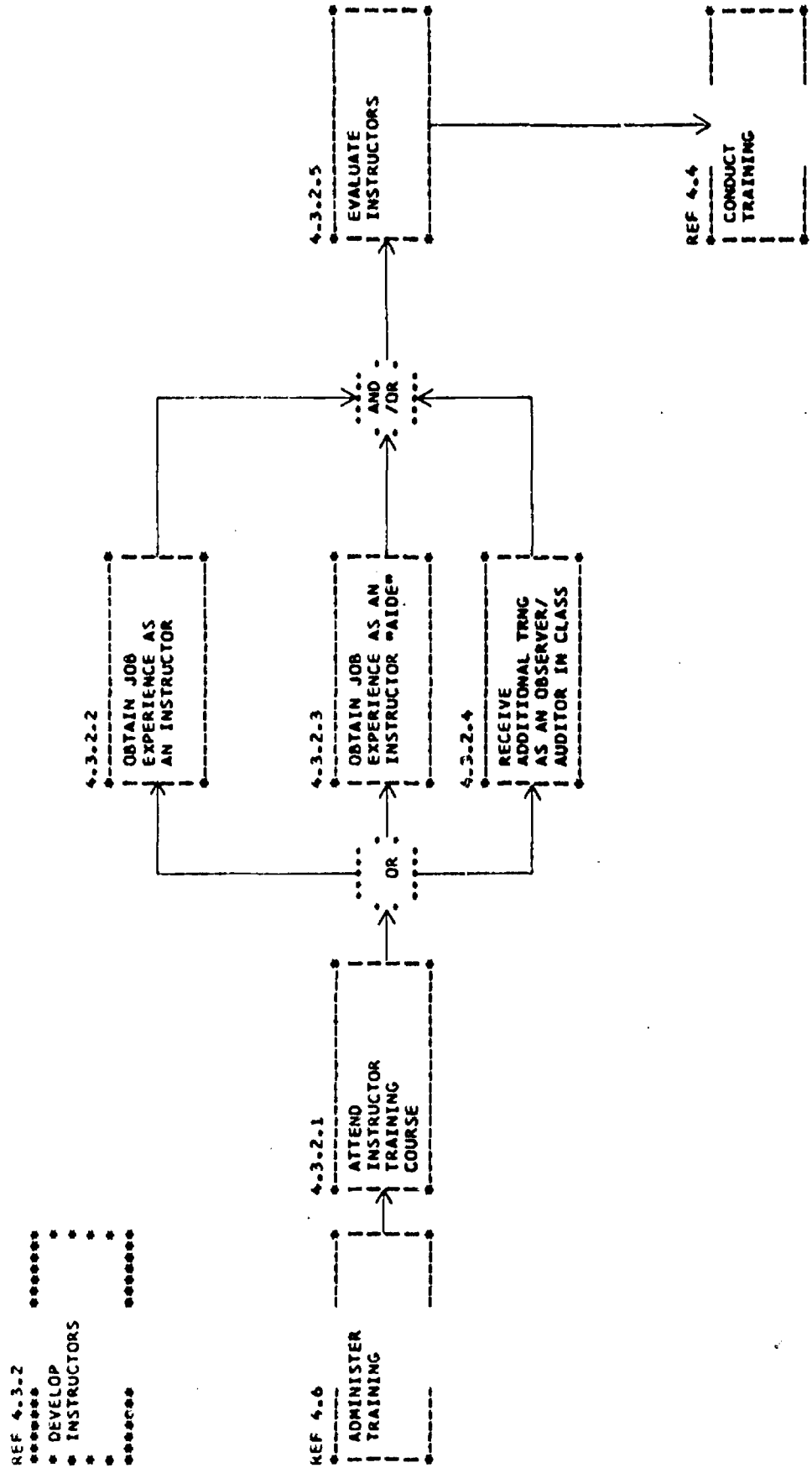

FIGURE VI 4.3.2-DEVELOP INSTRUCTORS

4.4 Conduct Training

This is a general flow for both conventional and individualized instruction. While the subfunctions are the same, some of the details are different. In individualized instruction, there are no formal class periods and no graduation as a group, since students complete the course at their own rate.

This function also includes OBT. While no visits were made to ships, evidence obtained from the NETS organizations visited indicated that OBT is not widely used, and relatively ineffective. For these reasons, no attempt will be made to show the OBT processes by means of a flow. The only real potential start to viable OBT is the relatively recent emergence of PQS aboard ships. The Fleet is placing some emphasis upon PQS. However, as yet, no feedback as to relative effectiveness is available.

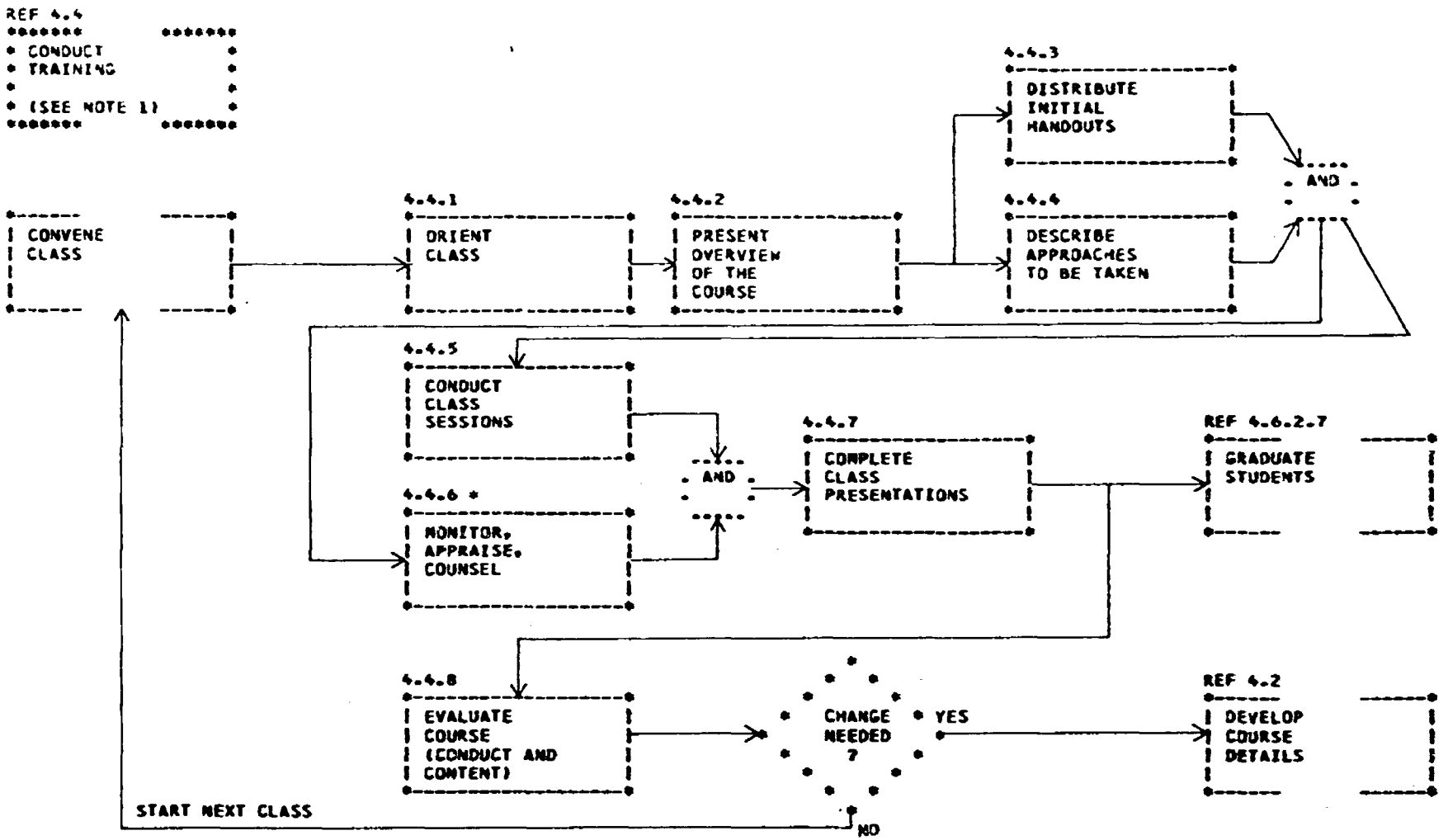

NOTE 1-THE GENERAL APPROACHES ARE THE SAME FOR BOTH CONVENTIONAL AND INDIVIDUALIZED INSTRUCTION. FUNDAMENTAL DIFFERENCES APPEAR IN THE "CONDUCT OF THE CLASS SESSIONS", SINCE THERE ARE NO CLASS SESSIONS AS SUCH FOR INDIVIDUALIZED INSTRUCTION.

FIGURE VI 4.4-CONDUCT TRAINING

4.4.6 Monitor, Appraise, Counsel

This subfunction applies to both conventional and individualized instruction. The "appraise" refers to more than testing. The astute instructor or learning supervisor can evaluate, subjectively, the student's attitude by his general demeanor. In addition, he must look for other indications of personal problems. Such indications may be withdrawal, lack of discipline, sleepiness, increased "sick calls," sloppy physical appearance, etc. The effective handling of students' problems of all types is a key factor in reducing attrition. The advantages of remedial counseling are described in:

"Preventive Counseling and Prescriptive Remediation" Mims, D. and Gaines, R. N.
Research Branch Report 9-73, March 1973
CNTECHTRA; Millington, Tenn.

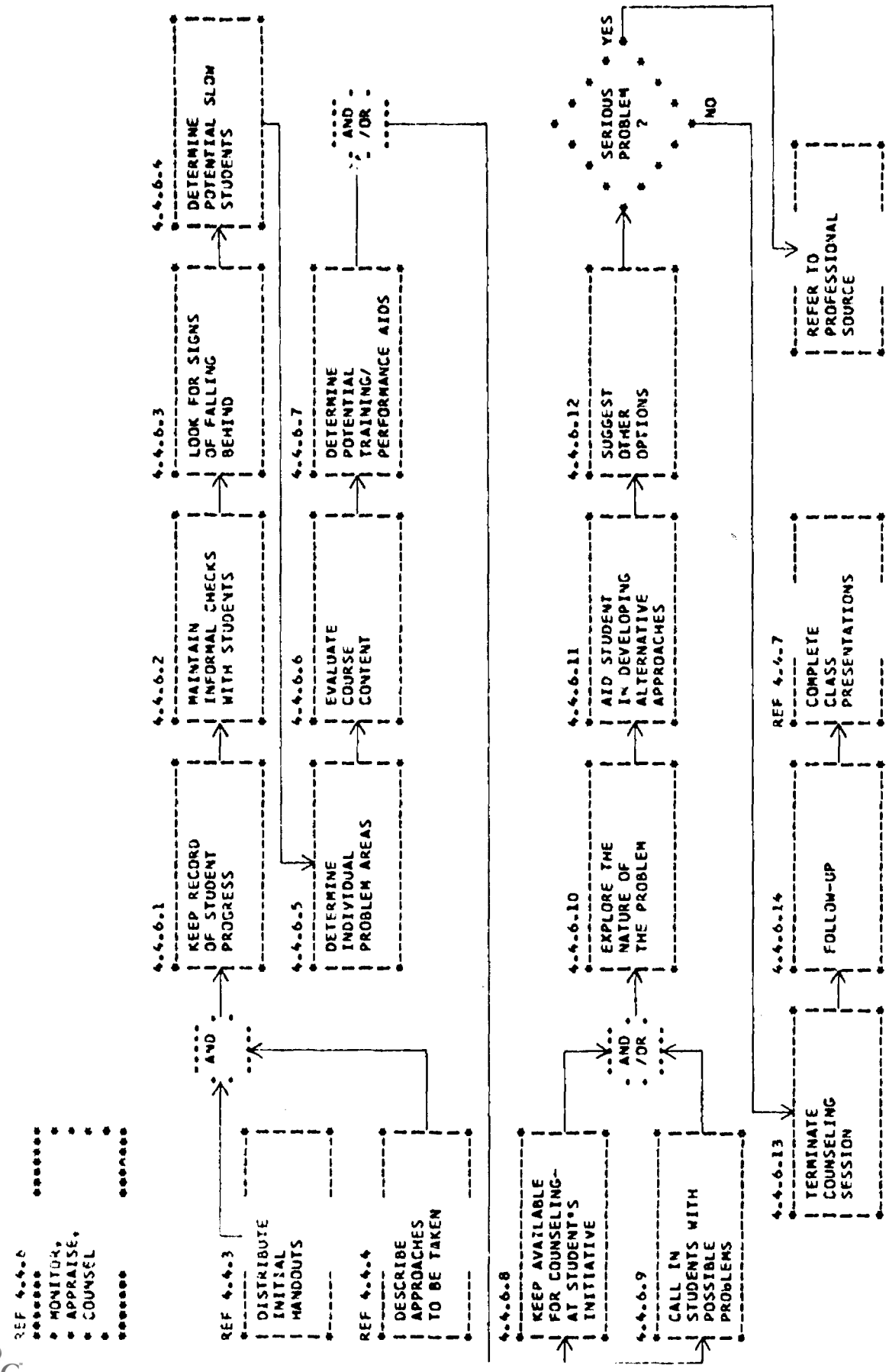

FIGURE VI 4.4.6-MONITOR, APPRAISE, COUNSEL

4.5 Evaluate Training (Testing)

Two general types of testing approaches may be used: conventional tests or criterion tests. Conventional tests are generally knowledge tests and are scored for the number correct. A passing grade is established and students scoring below that point are failed. For the most part, conventional tests are used with lock-step methods.

Criterion tests are based upon specific learning objectives. While they might be written, ideally they should be performance tests, and should include standards of performance. A limit of performance might be established such as performing correctly 9 out of 10 actions. A usual part of such a test is to show the student how to perform the "missed" ones. If performance falls below the standard, some re-training in the form of set-back, is required. Criterion tests are generally commensurate with individualized instruction. However, a combination of test methods may be used.

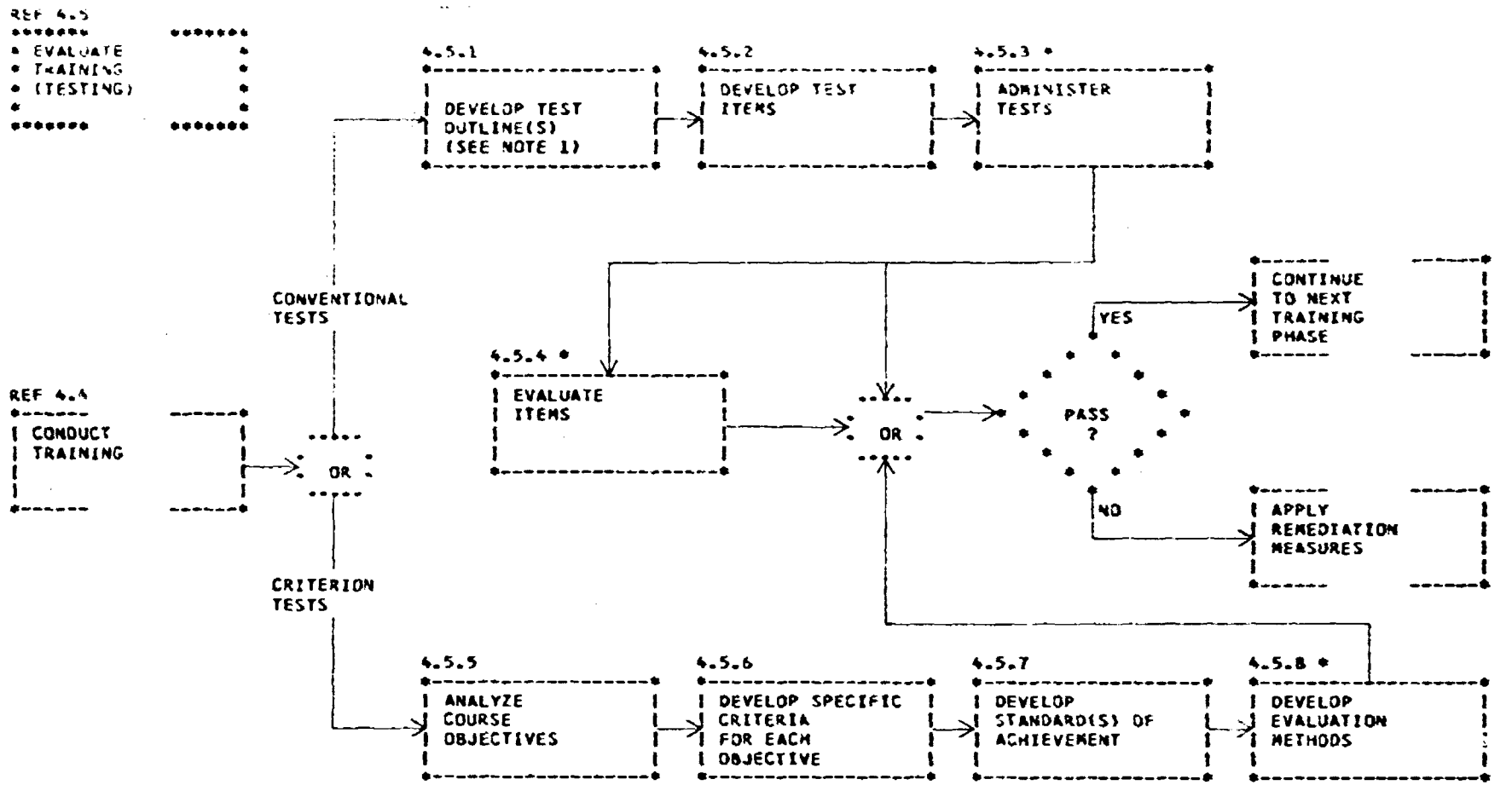

NOTE 1-SUCH OUTLINES WERE RARELY FOUND. A WELL CONSTRUCTED TEST OUTLINE WILL INCLUDE BEHAVIORAL OBJECTIVES.

FIGURE VI 4.5-EVALUATE TRAINING (TESTING)

4.5.3 Administer Tests

The general sequence of tasks involved in testing is shown in this flow. While a serial sequence is given, some tasks may be conducted in parallel.

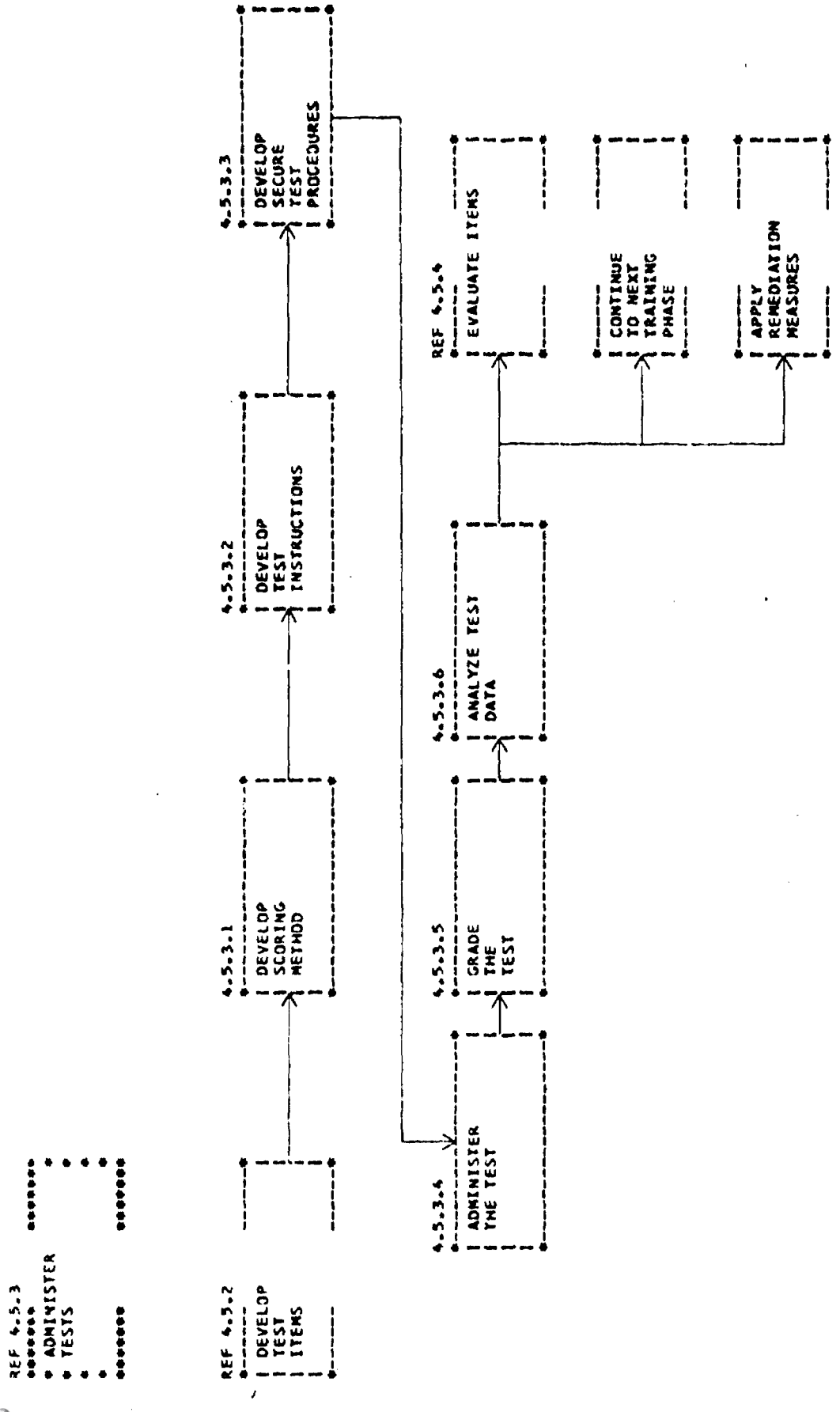

FIGURE VI 4.5.3-ADMINISTER TESTS

4.5.4 Evaluate Items (Item Analysis)

This is the method of analyzing items for the usual objective type examination. An analogous analysis of criterion tests would be to keep a record of the problems encountered for each behavioral objective. If the problems form a consistent pattern, the objective, the standard, the method of evaluation, and the method of presentation of the subject matter area should be reexamined.

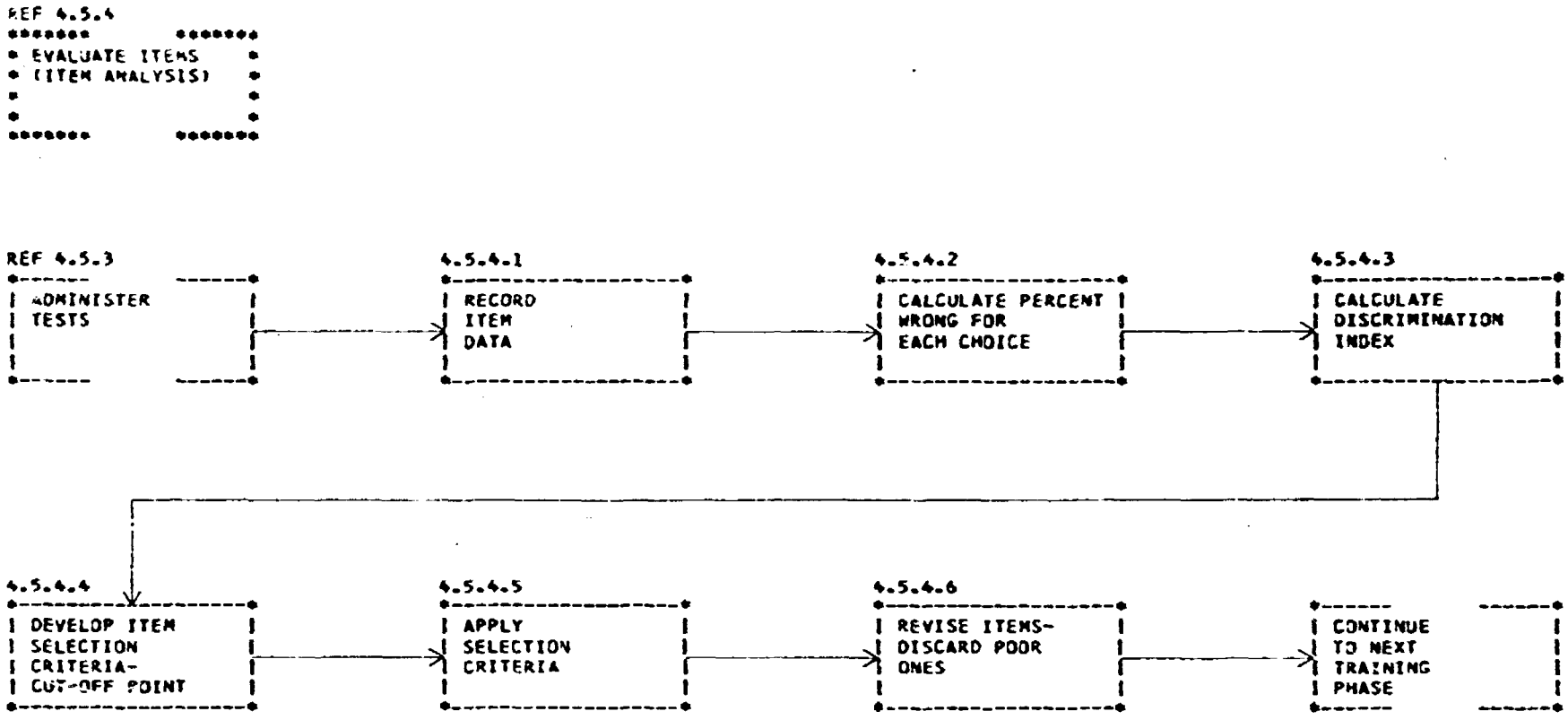

FIGURE VI 4.5.4-EVALUATE ITEMS (ITEM ANALYSIS)

4.5.8 Develop Evaluation Methods

The methods are in reference to criterion tests. After the behavioral objectives, criteria for evaluation, and standards of evaluation have been developed; methods of evaluating the objectives must be developed. Ideally these methods should be performance tests which are so structured as to determine indirectly what the student knows by his demonstrating that he can perform the objectives.

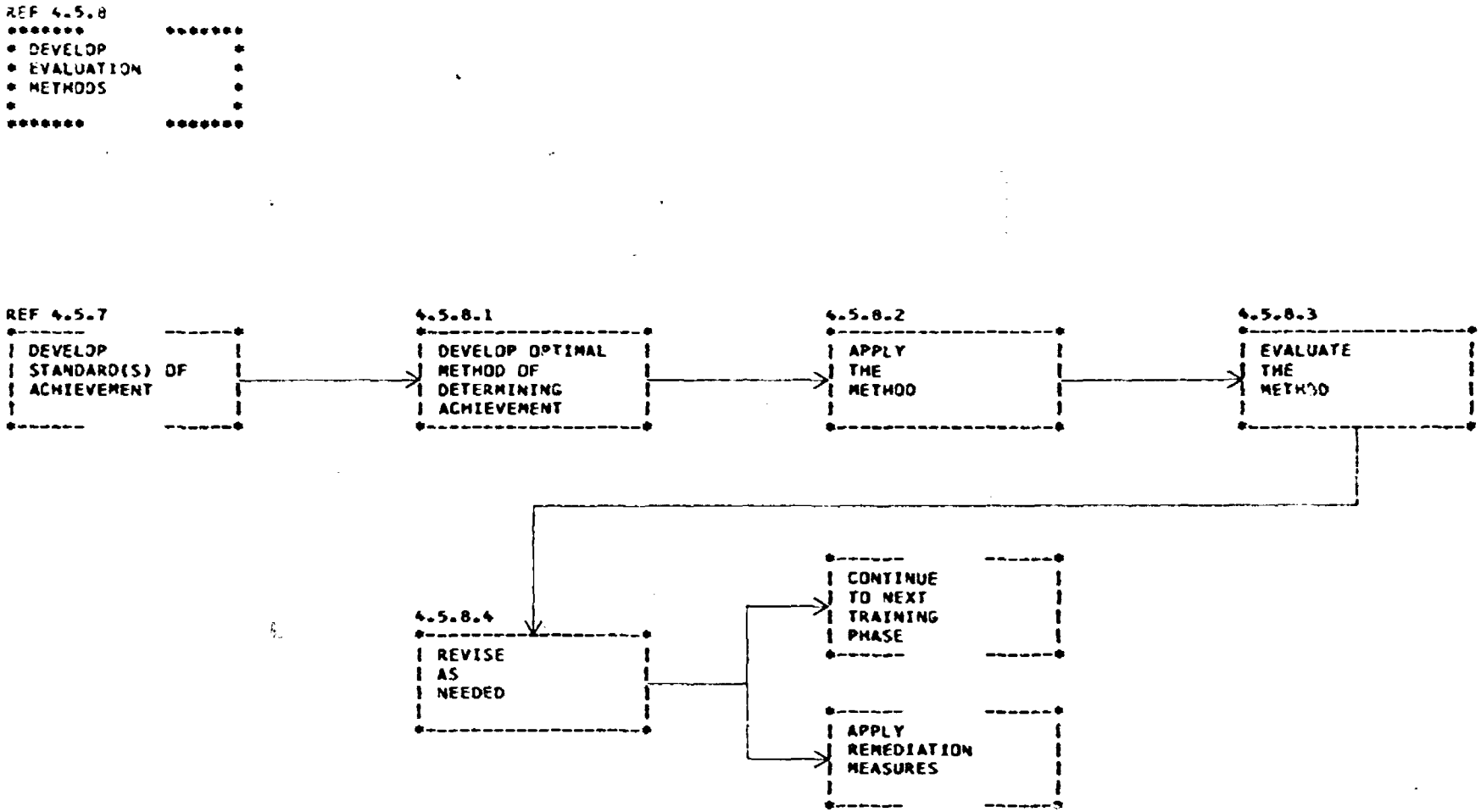

FIGURE VI 4.5.8-DEVELOP EVALUATION METHODS

1.6 Administer Training

This is a summary of individual areas of management.

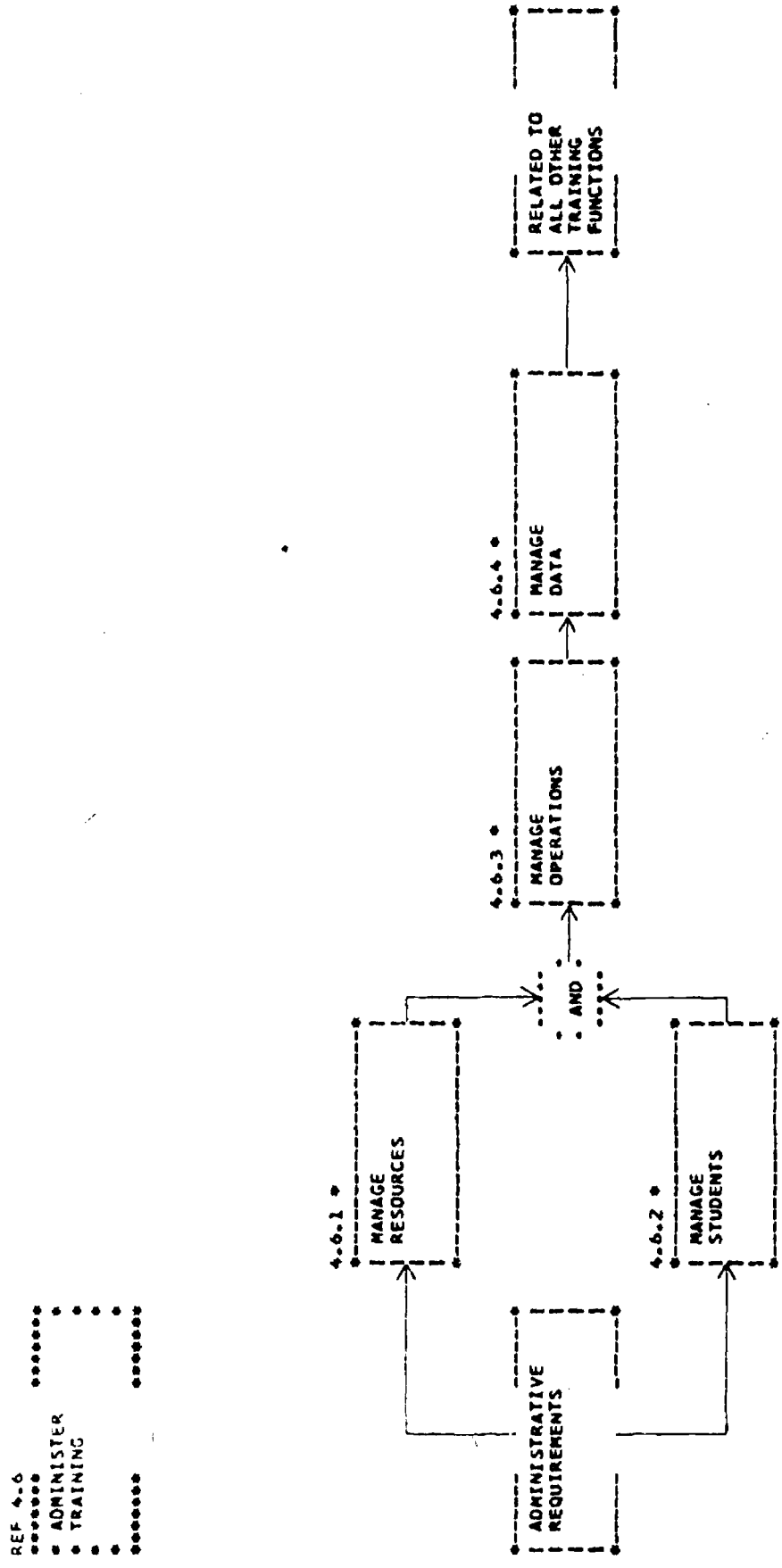

FIGURE VI 4.6-ADMINISTER TRAINING

4.6.1 Manage Resources

This subfunction is closely related to Function 6.0. It is treated separately here to emphasize the tasks at each training level.

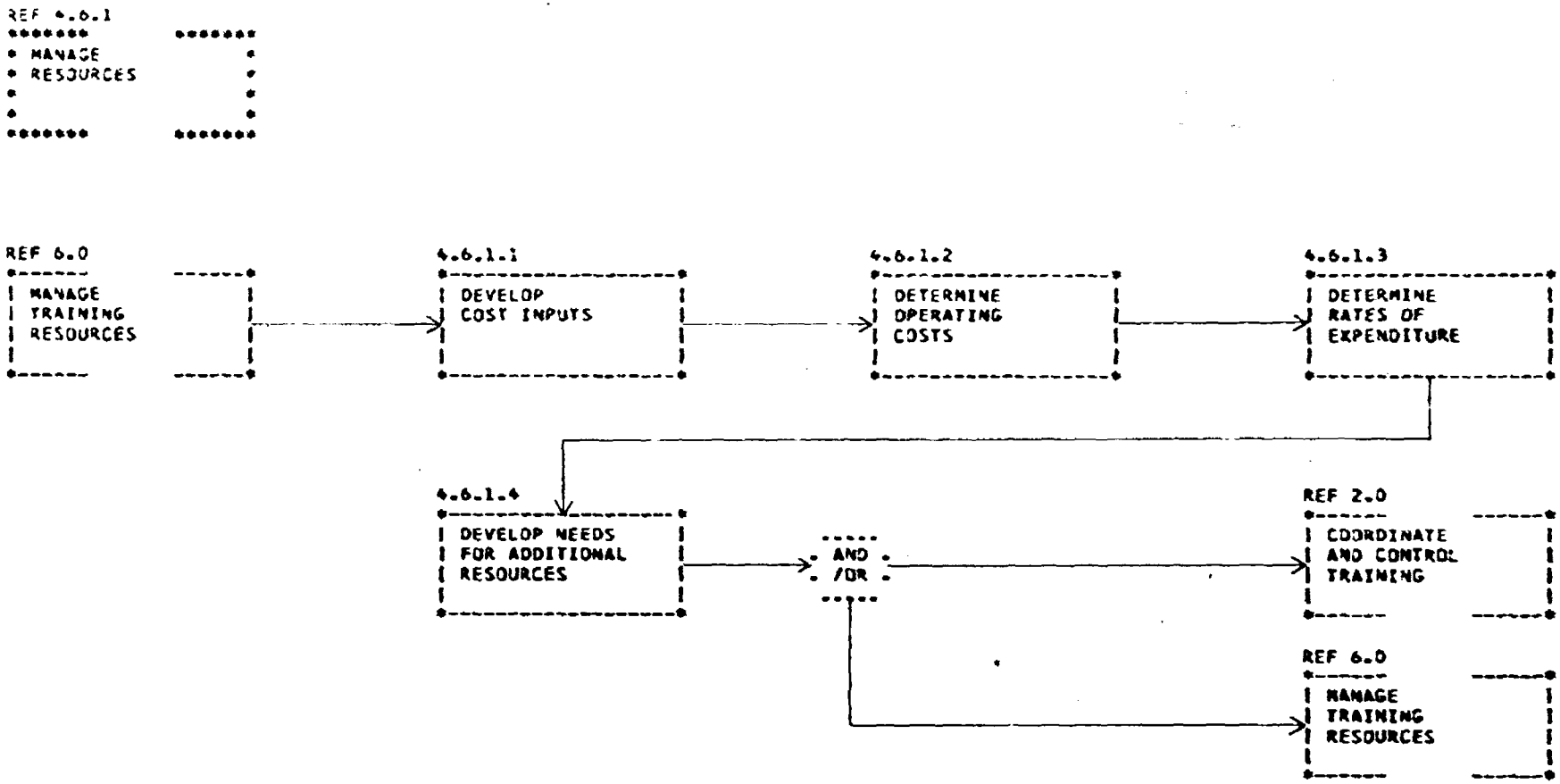

FIGURE VI 4.6.1-MANAGE RESOURCES

4.6.2 Manage Students

This flow shows the tasks involved in managing students other than in the classroom. Student data is recorded at critical evaluation periods. The recording of student data for all training is discussed in the context of Function 2.0 (e.). The various classes of problems and possible final endpoints for students are depicted also.

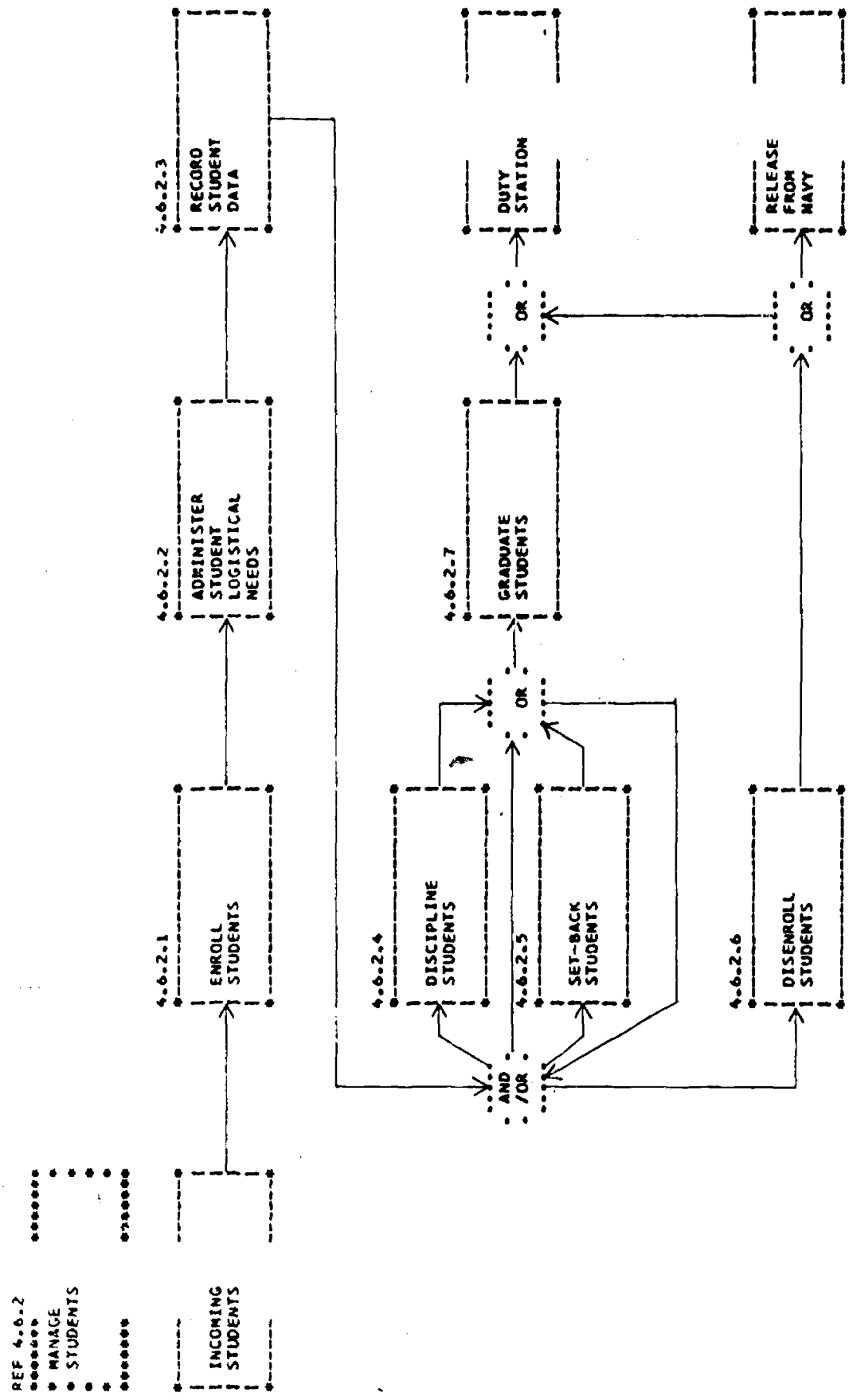

FIGURE VI 4.6.2-MANAGE STUDENTS

4.6.3 Manage Operations

This is an overall view of the major classes of operations directly related to training which must be managed.

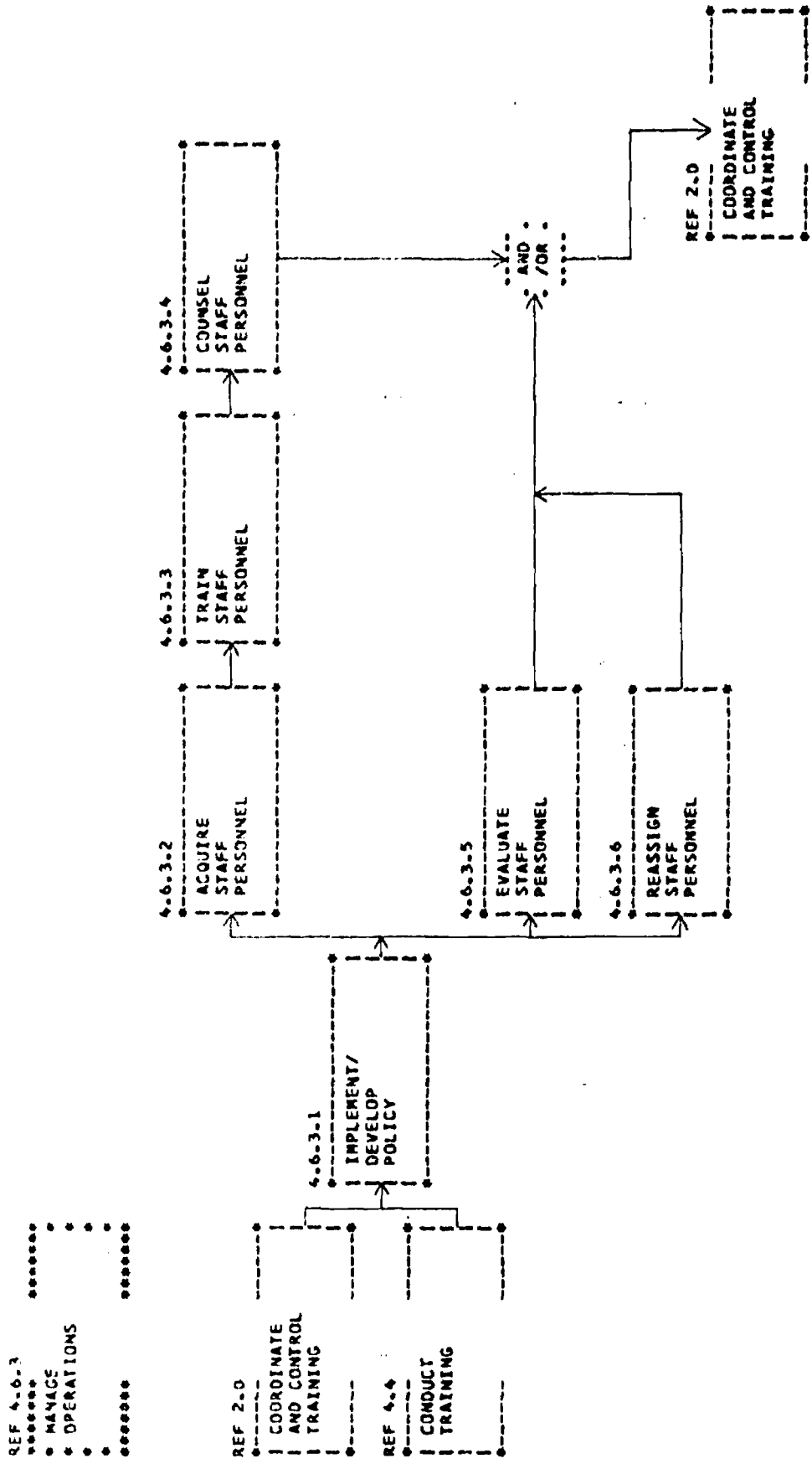

FIGURE VI 4.6.3-MANAGE OPERATIONS

4.6.4 Manage Data

The analysis and evaluation of operational data is a significant requirement. It enables the organization to determine status, to an extent it will allow projection since trends are revealed, and it provides information readily for queries and reports.

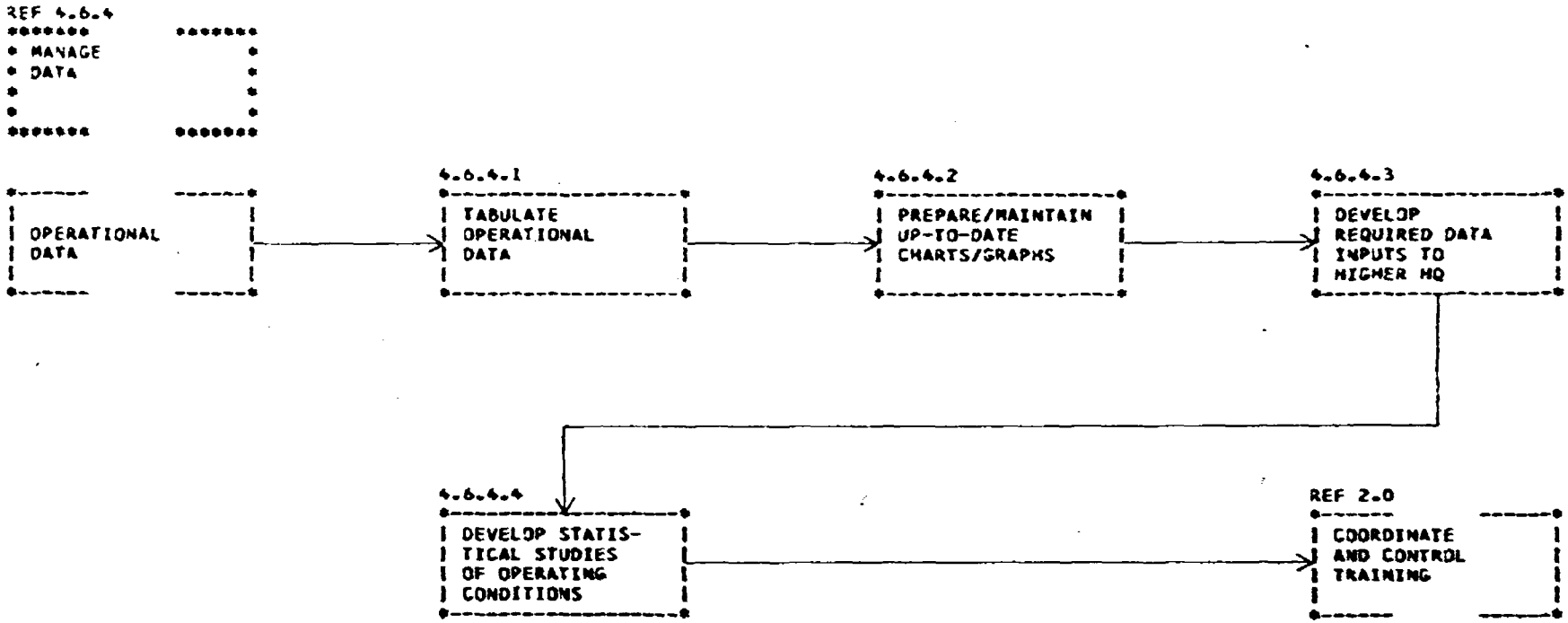

FIGURE VI 4.6.4-MANAGE DATA

THIS PAGE INTENTIONALLY LEFT BLANK

d. Summary of Major Technological Gaps and Problem Areas - Function 4.0 Implement Training

1) Task analytic data is not used as widely as possible.

2) While the policy is to use individualized instruction wherever possible, the majority of the training is still lock-step.

3) There is no analysis or on-going research to determine what kinds of instruction can or cannot be individualized.

4) Where individualized instruction is used, it tends to be exclusively programmed text-linear program.

5) The modular approach is not used as widely as is possible.

6) There is a wide disparity in the effectiveness of curriculum development.

7) Behavioral objectives and standards are not used as widely as is possible.

8) Criterion tests are not used as widely as is possible.

9) On-board training (OBT) is not utilized effectively.

10) There is no feedback approach to the evaluation of PQS, used for OBT.

11) Professional personnel and professional training/experience are in very short supply.

12) No guidelines are apparent for evaluating the quality and outputs of staff personnel other than instructors, particularly at the school level.

13) The evaluation of instructors lacks standardization.

14) The attrition rate in schools places an extra burden on the training establishment.

15) Development of training/performance aids is not sufficiently stressed.

16) Greater emphasis upon reducing cost of operation is needed.

e. Idealized Approaches - Function 4.0 Implement Training

Idealized approaches for this function are directly dependent upon the kinds of changes that occur in the Navy over the next ten years. It is assumed that a very desirable change will be to reduce, if not totally abolish occupational (across the board) training, and to substitute job specific training. Studies must be instituted to determine the extent to which the "A" school concept is cost-effective as compared to job oriented courses. A prime variable to consider is the fact that the ship-over rate for first term enlistees is less than twenty percent, and is even lower for some critical skills.

Research in this problem may also evaluate, in a systematic manner, the degree of commonalty between equipment, systems, and different kinds of training. The objective would be to determine the maximal extent of modular training that may be developed. A simple computerization, for example, could search all naval subject areas in a complete manner. This could be an area of research with an immense pay-off potential. A related search for commonalties should include all service courses.

It is further necessary to achieve a standard unit and terminology for training organizations. This should be standard, not only within the Navy, but across the other services. In describing naval training it is essentially impossible to know how many "schools" there are since schools vary from organizations that cover only one or two courses to those that involve dozens or more courses. In addition, training takes place in organizations called centers, detachments, RAGS, FRAMPS, etc. This variation is further confounded within the services. In the light of PL 92-436 and the report required by this law (Military Manpower Training Report) it is clear that standard approaches and terminology within and between the services will be eventually made mandatory by Congress through the Department of Defense.

The NETS should consider a different type of training structure which would keep the highest training unit as a "school or center," but would change many of the present schools into departments or sections. This approach fits into the concept of job specific training, since the school/center could be organized around groups of jobs. A further breakdown would be around course groupings. The elementary breakdown, after Recruit Training would be Basic Courses. These would pertain to the operation/maintenance of specific equipments. To the extent that modularized preparatory training is pertinent it would be utilized. For example the current Basic Electricity

and Electronics (BE/E) course and the developing Propulsion Engineering preparatory course would be applicable. In addition, it is expected that other developments from the ILDG (San Diego) will be useful also. The Basic Course would largely, if not totally replace the current "A" courses. The only "A" courses, or their future equivalents that should be retained are those that are demonstrably, through objective research study, cost-effective.

The Basic Courses would be followed by Advanced Courses and Specialized Courses. Advanced Courses would present more details of the job, but would emphasize subsystem and system aspects. Thus, such courses represent a logical career development path from "black boxes" (specific equipments) with very little subsystem involvement, to a greatly increased system capability. This further fits into the Combat System concept. In addition, all such courses must involve some basic principles of leadership, management, OBT supervision, and work supervision. Students will be primarily petty officers, whose jobs will require the organization and work assignments of subordinates, as well as the active training of non-school trained personnel. This latter part of the course should be modularized and used for all Advanced Courses.

Specialized Courses pertain to the training for major modifications, special requirements, refresher/update training; more complex, or advanced systems training, etc. To an extent, such courses would be equivalent to current "C" courses. However, as much as is possible, such courses should be replaced by self study packages (OBT). This should present no problem for non-equipment oriented courses. To an extent it may apply to other courses also. All such courses would involve criterion tests which may be administered by ships officers. Full training credit should be awarded after successful completion.

It is necessary that the primary training mode be individualized. This will allow the most capable people to finish the course at a relatively rapid rate, and will further allow slower learners a better chance to complete the course successfully.

A vitally necessary concomitant requirement is that the students receive assignment orders well before the shortest possible time to complete a course. If this is not done, the benefits of accelerated training are lost. In addition, this concept requires that a large proportion of the students in Basic Courses be assigned to specific stations/ships before reporting to the school. This gives knowledge of the kind of equipment the student will work on after reporting to his duty station. Such information is needed for effective job training. It is assumed that prior assignments cannot be made in all

cases, since some flexibility must be maintained. Where there is not prior assignment, the number of people trained on different equipments would be based on a historical basis. All efforts would be made to assign a student appropriately.

An essential part of the foregoing training concepts is effective OBT, since it is advocated in this approach that recruits with a 4-year or lower obligation go directly to the Fleet after recruit training. Training onboard may be performed through a combination of PQS, self study texts, programmed instruction, or any other potential means. Study programs, behavioral criteria, and informal criterion tests would be developed for each position requiring training. As mentioned before, petty officers would receive instruction in conducting OBT as part of their Advanced Course.

In addition, each lead petty officer would have direct responsibility for the training of his subordinates. This would be checked by setting up individual learning time-tables with milestones specifying when a striker has achieved certain behavioral criteria. This aspect of each petty officer's job would be one consideration in determining his potential recommendation for taking the advancement in rate examination. His effectiveness would also be judged in the evaluation of his Division Officer. If personnel are trained on-board effectively it must be through the leadership of his officers and petty officers. If they are deficient in conducting/supervising/monitoring, such lacks may well be considered in developing personnel evaluations (Fitness Reports). This idea for motivating supervision of OBT is a type of management by objectives. One of the essential objectives is real OBT. These objectives, and the standards for their determination are specified. Failure to achieve such objectives must reflect on supervisory personnel.

This idealized approach is exemplified in Figure VI 4.7 Idealized Personnel Flow (1980 Time Frame). All incoming personnel must receive Recruit Training. The length of this training must be a function of what is needed and how much can be learned aboard ship. Since the amount of training needed is currently largely a matter of opinion, it is suggested that a research program be instituted to determine the necessary training. It may well be, also, that more capable personnel may be able to go through a shorter, albeit, more rigorous accelerated course as compared to average and slow trainees.

After Recruit Training, the 6-year enlistees may go to a Basic Course, if qualified, or to the Fleet (OBT). Those enlisting for 4-years go directly to the Fleet (OBT). This initial assignment to the Fleet is designated OBT, since a requirement will be that they train within a specific job context as described

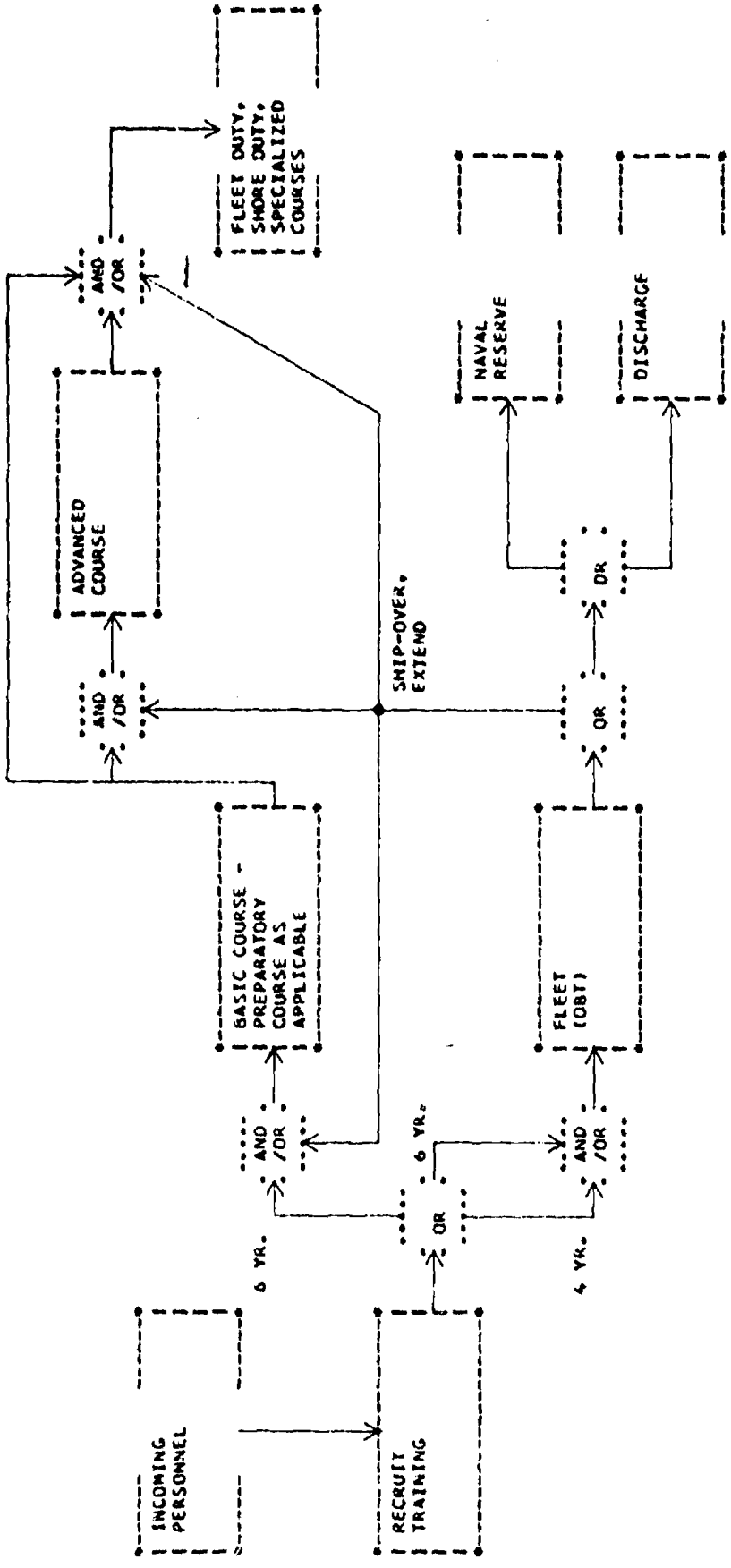

FIGURE VI 4.7-IDEALIZED PERSONNEL FLOW (1980 TIME FRAME)

previously. Job assignments for such personnel must be made through BUPERS, based upon ships needs. This must be done to control the number of people in various NEC's. Direct assignments to the Fleet will not hurt recruiting, if the OBT concepts are followed. If anything, it may help, since many individuals are eager to get to sea rapidly. The point that is critical is that training will occur and be effective in direct relationship to the trainees' capabilities and motivation.

The 6-year enlistee may go to an Advanced Course, Specialized Course, or Fleet duty. For subsequent enlistments there would be alternation between Fleet/Shore duty and specialized training as appropriate. A coveted assignment under this concept, for both officers and enlisted men, would be to a training unit, since this would help them perform the OBT responsibilities more effectively.

The 4-year enlistees have an option of going to Basic, Advanced, or Specialized Courses if they extend their enlistments or if they ship-over. On the basis of current figures, it is expected that approximately eighty percent of these individuals will not stay in the Navy beyond the initial enlistment. On release, there will be a further option of entering the Naval Reserve or receiving a discharge.

Standardization of OBT will be accomplished by the packages/courses/guides supplied to the ships/stations by CHNAVTRASUPP. Preparation of these materials would be primarily by the schools, guided by CHNAVTRASUPP. Additional sources of development may be within CHNAVTRASUPP, or by contract.

It is visualized that training units of the future will have sizeable staffs involved in the preparation and revision of OBT materials including training/performance aids. Also, very few conventional instructor personnel will be needed. Most of the instructional staff will consist of Learning Supervisors, Program Writers, Test Writers, and Counselors. Further effort will involve close support to the Fleet for training problems as well as a careful application of feedback approaches (see Function 5.0).

The preceding exposition is an overall outline for a future instructional subsystem. Major interfaces are discussed and their significance has been stressed. Unless the interface assumptions are met the basic tenets of the future system cannot be fulfilled.

The following section of this discussion will consist of brief descriptions of specific idealized situations. Some of these paragraphs will reinforce earlier statements, others will

supplement them. For the most part, these "ideals" will be directed toward the summary of major technological gaps and problem areas presented in (d.).

Specific idealized approaches:

1) Task analytic data must be the basis for all curricula. Where earlier analysis has been utilized, complete and effective feedback must be obtained to validate and/or correct the curriculum. There must be an assumption that initial analysis may have defects, as well as the fact that the details of a job may be changed.

2) Training should be by means of individualized instruction as much as is possible. No instruction should be exempt from "individualization" without excellent justification and the concurrence of upper command. However, non-concurrence carries the obligation of pointing out "how" to individualize the subject matter under discussion. In part, this ideal is based on the assumption that movement orders will be prepared well before the shortest time possible to complete a self-paced course.

3) If individualized instruction does not seem to be applicable in some instances, research should be instituted to determine the pertinent variables and if individualization might be approached in such a way as to make it feasible.

4) Branching approaches to individualized programs should be used more extensively, since these allow the most capable students to advance much more rapidly than linear programs. Research programs should determine the extent of time differences for course completions in order to establish data pertinent to develop cost-effectiveness of branching vs linear approaches.

   One problem is the writing of branching programs. This is a much more difficult task than the linear approach. The feasibility of training enlisted personnel for the writing of such programs should be explored. If this is not a likely approach, a small nucleus of well qualified Educational Specialists might be used.

5) It is essential to extend the application of training commonalties and to develop training modules that are common for different specialties. A more effective method of finding such points of similarity is required. An immediate solution that emerges is the use of a computer program. If data for every topic of every major course were searched appropriately, commonalties could be established readily.

6) The development of curricula is a difficult and demanding task if performed correctly. To assure that these developments are maximally effective the preparation of curricula and course materials must be centrally controlled to a much greater extent than is the case at present. Virtually all programmed text materials, CAI programs, and CMI programs must be either centrally produced or produced on a tasking basis by a force covering several different commands plus other services as appropriate. Much of the other curricula material should be developed in the same manner.

7) It is a fundamental requirement for effective training that the goals and objectives of the training be specified. Consequently, all courses must involve behavioral objectives. These should be carefully prepared and controlled since they form the foundation of the curriculum.

8) The ideal method of testing to determine if behavioral objectives have been achieved is by means of criterion tests and clear standards for evaluation. These must be integral parts of all courses and should be centrally prepared and carefully controlled as a principle internal measure of quality control. The external index is "Feedback."

9) The amount of OJT must of necessity increase in the light of these concepts. The Fleet will be getting some school people that are especially trained for a job as assigned. If they are assigned to different jobs, the ship must train them. However, other new personnel will report that have not been job trained. The motivation on the ship must be to see that such personnel learn rapidly. Such "ship" motivation to encourage OJT is not apparent currently.

10) An evaluation and feedback approach to PQS is essential. No instance of revision of a PQS was found. It is unlikely that some changes are not needed. In addition, a study must be made of how PQS is used aboard ship - methods used and problems encountered. The objective of such a study would be to develop methods of more effectively using PQS. This also is a needed research area.

11) The ideal situation requires professionally trained personnel. It is necessary to establish specific career fields for both officer and enlisted personnel. This would entail training for all phases - administrative and instructional, as well as a defined "growth ladder."

Part of the career field must consist of Educational Specialists, to provide continuity of effort at training units. There must be definitive goals and objectives established for the development of these specialists. In addition, there should be safeguards against the misuse of such personnel.

12) There should be specific guidelines and objectives established for the administration/management of training units. In addition, there should be standards for the evaluation of these functions. The ideal situation requires superior management. This requisite can be achieved by the use of the preceding tools. Application of such methods is, essentially, management by objectives.

13) Judged over the wide spectrum, the evaluation of instructors requires improvement. The basic course gives him excellent fundamentals. These are crammed in, because of time restrictions. When the new instructor starts, he is not fully prepared and he cannot be so considered until he has had at least two complete courses under careful supervision Such supervision must include close evaluation and monitoring.

Three separate instances of technical deficiencies of instructors were found, even though in no case were questions addressed to that point. This indicates that no assumption may be made that instructors are fully knowledgeable in their technical field. With increased individualized instruction, this problem will diminish, but until all instruction is individual, the instructor should be required to study the subject matter and sit in on a course.

14) The idealized situation is one in which the attrition rate is at the lowest possible point. Even if it were as low as ten percent, this means a sizable extra amount of trainee input is needed to maintain the required output.

A drastic reduction in attrition might be achieved by handling trainees in a more effective manner than is now current. In cases that may need remedial aid, such as reading improvement, this must be available. The application of counseling must be extended. If the load warrants a full time counselor, the required number must be added to the staff. All staff personnel must receive increased training in counseling. All possible effort must be made to "save" a student, short of lowering standards. However, a cost-effective point of "no return" is needed also. Students should not be carried beyond that point unless the circumstances are unusual.

There would also be a close analysis of the kinds of problems/situations/subject matter areas which tend to produce the greatest amount of academic losses. This is an important area for potential research, since the reasons given in the school reports of attrition are relatively incomplete and fragmentary.

One potential area of analysis and research is within the structure of the course itself. For example, some parts of courses may be particular stumbling blocks. Perhaps these are basic arithmetic or mathematics, a physical principle such as Boyles Law, or a particular manipulative skill such as splicing a wire cable. If behavioral objectives form part of the course, as they should and will in the idealized situation, the analysis is simplified as shown in Figure VI 4.8. It shows the need to determine which objectives are problem areas. Once these are highlighted, decisions must be made as to whether the objectives are valid or are really needed. A valid, but unneeded objective might be learned more effectively by means of OBT. If the objective must remain, the next decisions involve whether or not the presentation can be improved, or if another approach might be taken. If changes are possible, they should be made. If such change does not appear to be a possibility, a clear requirement for research is evident and should be developed appropriately.

Without clear behavioral objectives, the analytic process is similar, but more complex, since it may be more difficult to determine problem areas.

A comment on "other approaches" is required here. If one method poses a problem, another method may not have that problem. For example, assume that for a particular course, analysis has revealed that the learning of Ohm's Law presents a problem to many students. An examination of the objective might reveal that knowledge of Ohm's Law is not really needed in order for the individual to perform his job. If it is needed, the parts of the objective are examined and then the way in which it is taught. Assume that each part of the objective is valid and the method of teaching appears to be reasonable. Now other approaches come in. A nomograph might be devised for calculating problems, a simple mnemonic might be applied, or a conversion card. Here an acceptable performance aid might salvage trainees that may otherwise fail. Such aids should be reported to CHNAVTRASUPP for cataloging (see Function 8.0). Also, as appropriate, aids of this type should be made available to technicians in the Fleet. (See Function 5.0).

15) The place of training/performance aids in the idealized training situation was mentioned previously and is covered again in the context of the discussions of Functions 5.0 and 8.0.

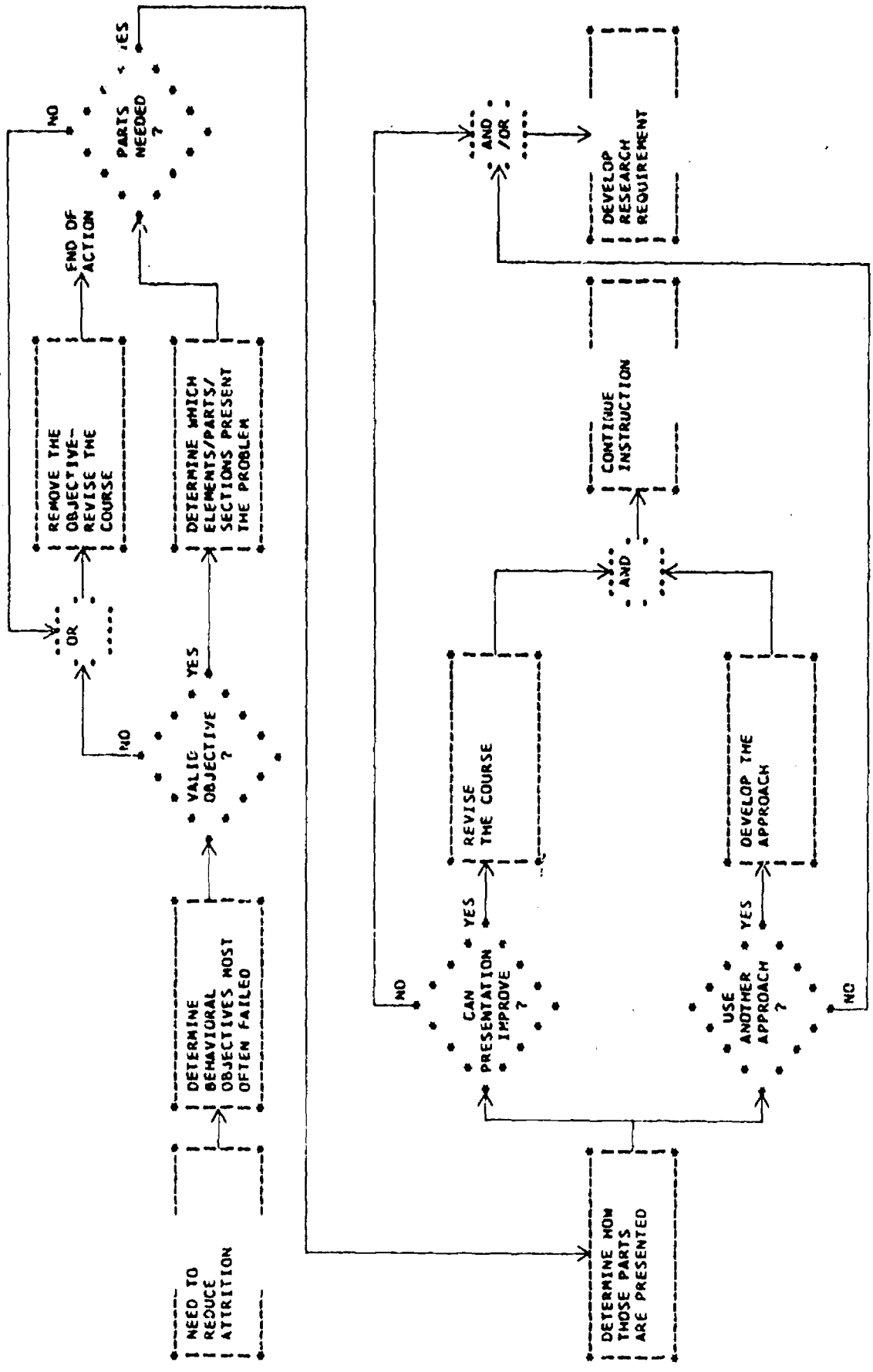

FIGURE IV 4.8-IDEALIZED COURSE ANALYSIS-TO REDUCE ATTRITION

Such aids can be valuable in the training process, but equally or more so, in actual job performance. Training of instructional personnel should include an introduction to aids, including the principles of development.

Aids which are developed and verified through trials must be made available to the total naval establishment. The appropriate agent for this is the CHNAVTRASUPP (see Function 8.0). Also, when students finish a course, each should be given performance aids and reference materials. Such materials would be an integral part of OBT as well.

16) In the light of great pressures to increase cost-effectiveness, inter-service schools offer an excellent potential solution. Cost studies should be made to determine if other service schools offer cost advantages, assuming the content meets the need. Civilian training should be examined also.

Similar effectiveness needs may be met by improving facilities usage. This might be done by installing more load-complementary courses within a single facility, and/or scheduling facilities for other activities, permitting an overall reduction in facilities needs.

The implementation of the earlier approaches will also have a decided impact upon cost-effectiveness.

5. Function 5.0 Evaluate Performance (Feedback)

a. Definition

This function deals with the determination of how well training prepares the individual to perform in his job assignment. Thus, it is post formal training feedback. Information about how well a student is learning, or intra-training feedback is placed in Function 4.0 Implement Training, since such information is an integral part of the teaching process. Certainly knowledge of how a student is progressing is important. But this does not tell if the skills that are acquired will enhance his later job performance.

Feedback is a vitally important function, since the absence of such knowledge could result in failure to accomplish the training mission -- preparing individuals to perform on their job effectively. In spite of such significance, it stands as the function which is in the greatest need for improvement.

The subfunctions and their interrelationships are shown in Figure VI 5.0. After the determination of which method or methods will be used, the method is applied. Data is gathered, analyzed, and evaluated; and a decision is made to revise the curriculum or course.

A major problem became apparent when describing the "current system." In the process of analyzing the field data it was clear that some segments had not been mentioned by the respondents. In many cases, it was impossible to get from one status or condition to another without a number of intermediate actions/operations. Consequently, it became necessary to develop such intervening operations. In some instances, what is being called current may not be performed in reality. In other cases, only one example of a subfunction or task was found. It is inappropriate, where this occurs, to state that such a task is characteristic of the current system. Therefore the flows for Function 5.0 contain a combination of both "Current" and "Idealized" subfunctions/tasks. The Idealized ones are so marked. As mentioned previously, some of the flows considered to be current, may contain elements which are not really being performed explicity, but certainly should be. Those blocks with digits preceded by an "N" and followed by an "A" are new (idealized).

If the block has the same number as a current block, but is used in a different sense, the digits are followed by an "A". Those flows which contain all idealized blocks will be so marked at the top and bottom of each sheet.

The flows thus represent a combination of current and idealized approaches which follow the present training system context. However, a more drastic change is needed in order to obtain the best possible feedback. This approach will be outlined in a later portion of this section.

b. Description

The Evaluate Performance (Feedback) function is described through an outline which contains all of the functional elements presented in the functional flows, and in addition through an overall functional flow, Figure VI 5.0 - Evaluate Performance (Feedback).

	Page
5.0 Evaluate Performance (Feedback)	183
5.1A Determine Methods to be Used (Idealized)	186
N5.1.1A Consider Potential Approaches (Idealized) . .	188
N5.1.1.1A Evaluate Advantages/Disadvantages of Each Approach (Idealized)	192
N5.1.1.1.1A Evaluate Characteristics of Potential Approaches	
N5.1.1.1.2A Consider Advantages/Disadvantages in Specific Context	
N5.1.1.1.3A Tentatively Select Possible Approach(es)	
5.1.1.2 Evaluate Past Approaches to Feedback	
5.1.1.3 Evaluate Need for Feedback	
N5.1.1.4A Determine Resources Available (Idealized)	194
N5.1.1.4.1A Determine Personnel Needed for Each Approach	
N5.1.1.4.2A Discard Consideration of That Approach	
N5.1.1.4.3A Estimate Amount of Training Needed	
N5.1.1.4.4A Compare Needs/Availability for Each Potential Approach	
N5.1.2A Determine Needed Resources for Each Alternative (Idealized)	196
N5.1.2.1A Determine Costs and Effectiveness for Each Alternative	
N5.1.2.2A Determine Best Combination of Approaches to Use	
N5.1.2.3A Evaluate Impact of Resource Needs	
N5.1.3A Select Specific Technique(s) (Idealized . . .	198
N5.1.3.1A Estimate Resources, Impact, Priority, and Need for Feedback	
N5.1.3.2A Select Best Technique(s) for the Situation	
N5.1.3.3A Make Administrative Arrangements	

Page

5.1 Determine Methods to be Used 200
5.1.1 Consider Past Approaches
5.1.2 Consider Questionnaire Method
5.1.3 Consider Information From New Staff Personnel
5.1.4 Consider Information from Informal Visits
5.1.5 Consider Information Sources - Letter, Phone Direct Contact
5.2 Develop/Revise Techniques 202
5.2.1 Develop Conceptual Approach
5.2.2 Develop Details of the Technique
5.2.3 Recheck That New Technique is Better Than Current Ones
5.3 Apply Techniques 204
5.3.1 Apply Questionnaire Technique 206
5.3.1.1 Utilize Existing Form
5.3.1.2 Develop/Revise Form
5.3.1.3 Send Form to Former Student
5.3.1.4 Enclose Form in Student Record Jacket - for His Supervisor
5.3.1.5 Receive Completed Forms
5.3.2 Obtain Information From New Staff Personnel . 208
5.3.2.1 Give Question Form to New Staff Member
5.3.2.2 Evaluate His Responses
5.3.2.3 Observed "Deficiencies" by New Staff Member
5.3.2.4 Develop Curriculum/Course Change Ideas
5.3.3 Obtain Information from Informal Visits . . . 210
5.3.3.1 Make Administrative Arrangements for Visit
5.3.3.2 Brief Visit Team
5.3.3.3 Interview School Graduates
5.3.3.4 Interview Officers/Supervisors
5.3.3.5 Organize Data
5.3.4 Obtain Information From Informal Sources . . . 212
5.3.4.1 Receive Letters, Messages in Regard to Training
5.3.4.2 Receive Informal Direct Information in Regard to Training
5.3.4.3 Evaluate Data

5.3A Apply Technique(s) (Idealized) 214
N5.3.1A Arrange for Outside Help
N5.3.2A Develop Preparatory Tasks and Materials
N5.3.3A Plan for Training
N5.3.4A Initiate Data Gathering

Page

5.3.5 Complete Data Gathering 215
5.3.5.1 Develop Method for Entry of Data as Gathered
5.3.5.2 Collate/Classify Data
5.3.5.3 Organize Data into Logical Categories
5.4 Analyze Data 218
5.4.1 Tabulate Data
5.4.2 Perform Statistical Analysis
5.4.3 Observe Commonalty of Responses
5.4.4 Highlight Specific Points and/or Items
5.4.5 Regroup and Summarize Data
5.4.6 Develop Trends and Implications
5.5 Evaluate Analyzed Data 220
5.5.1 Compare Trends Obtained by Past Methods
5.5.2 Determine Contradictions/Inconsistencies
5.5.3 Determine Clear Cut Trends
5.5.4 Determine Artifacts or Problems in Methodology
5.5.5 Evaluate Information in the Total Context
5.5.6 Summarize Valid Information
5.5.7 Determine Parts of Training Affected
5.5.8 Develop Plans to Check on Questionable Data
5.5.9 Check on Questionable Data
5.6 Determine Need for Training Revision 222
5.6.1 Evaluate Significance of Required Revision
5.6.2 Evaluate Extent of Revision
5.6.3 Determine When Planned Curriculum Review is Due
5.6.4 File Data and Notes

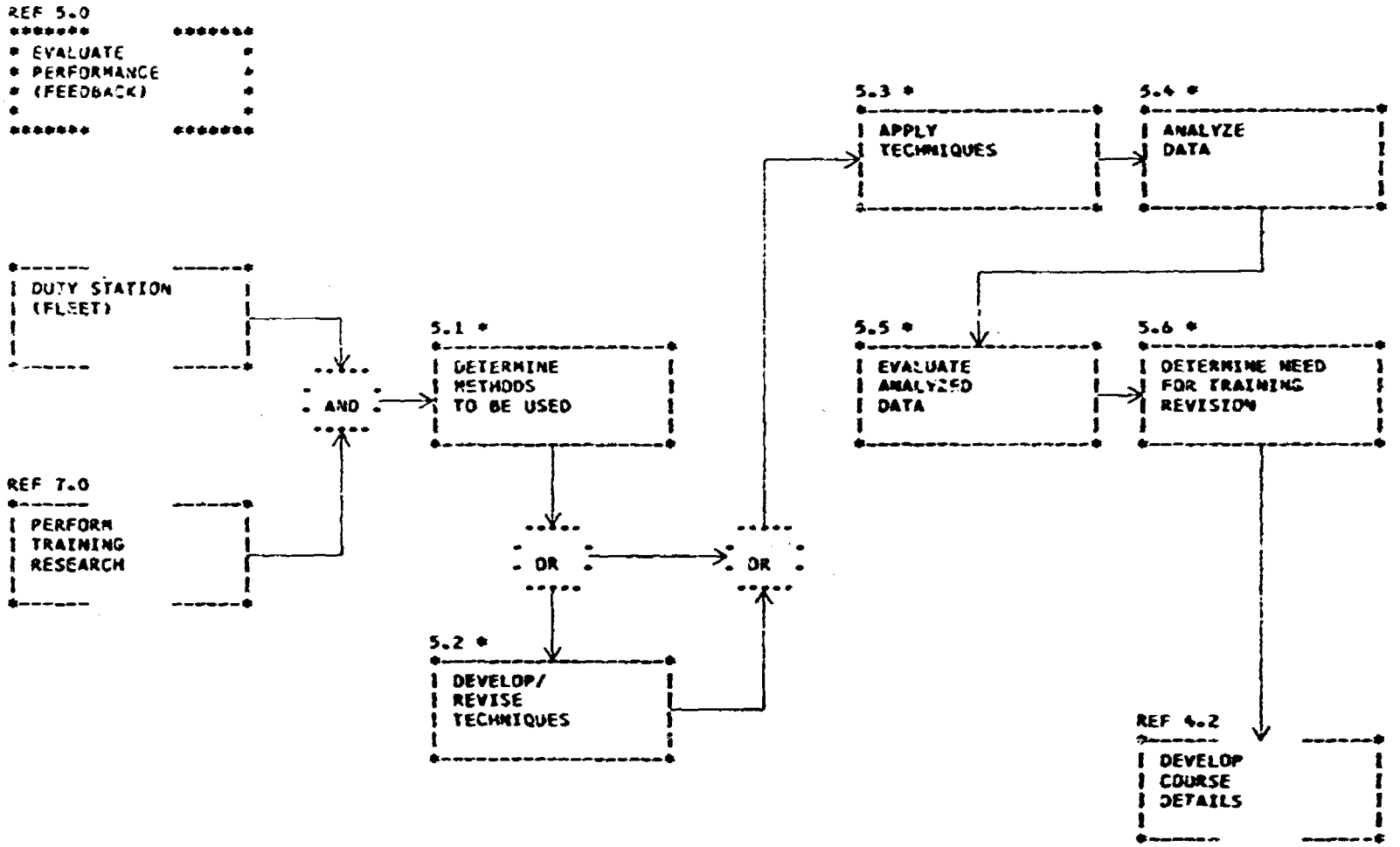

FIGURE VI 5.0-EVALUATE PERFORMANCE (FEEDBACK)

c. Functional Description of NETS - Function 5.0 Evaluate Performance (Feedback)

A general description of this function was presented in the outline and top-level flow of the preceding section. Further detail is shown in this section through a series of flows which expand key subfunctions. In addition to notes within the flows that elaborate on significant points, discussion of the flow is contained on the facing page.

5.1A Determine Methods to be Used (Idealized)

This flow shows that a systematic review of possible methods for obtaining feedback information must be made.

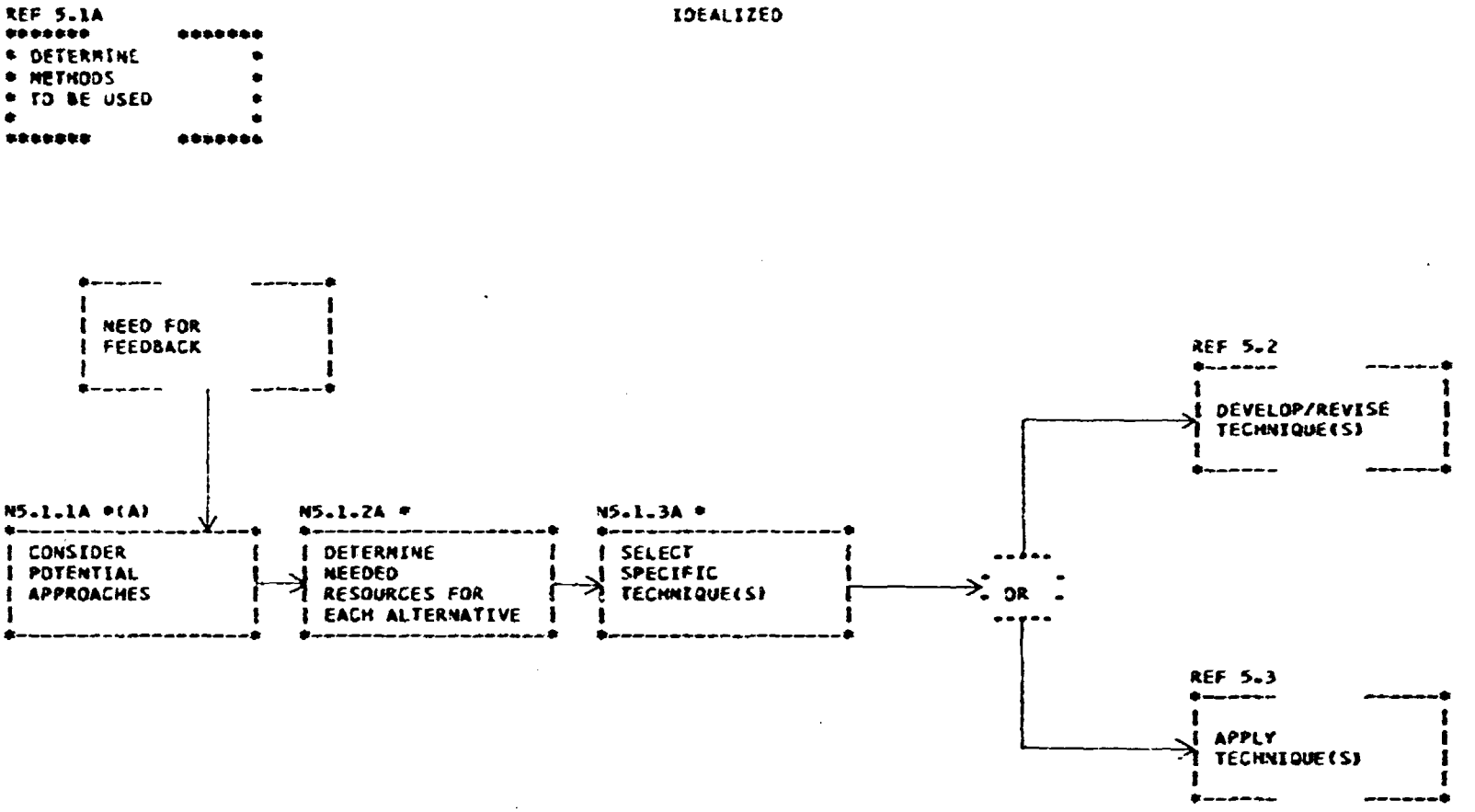

(A) SEE TABLE VI 5.1

FIGURE VI 5.1A-DETERMINE METHODS TO BE USED (IDEALIZED)

N5.1.1A Consider Potential Approaches (Idealized)

The esserce of this subfunction is to consider the advantages and disadvantages of each potential approach. This is elaborated in (e.) section for this function. The resources available must be further considered in order to start toward an optimal selection.

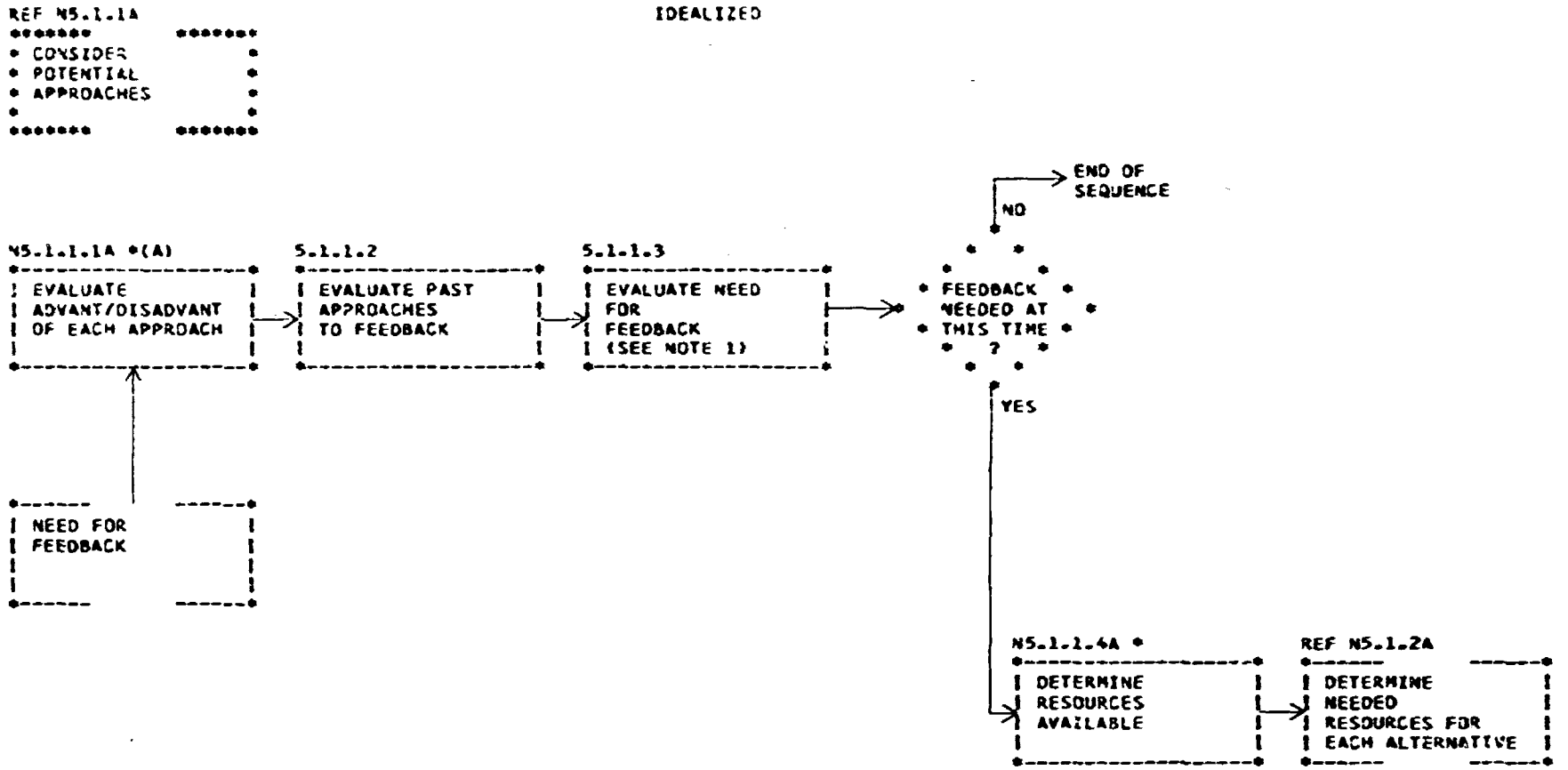

(A) SEE TABLE VI 5.1

NOTE 1-FEEDBACK IS ALWAYS NEEDED, HOWEVER THE FREQUENCY OF FEEDBACK APPLICATIONS MAY BE CONSIDERED.

FIGURE VI N5.1.1A-CONSIDER POTENTIAL APPROACHES (IDEALIZED)

ADVANTAGES AND DISADVANTAGES OF POTENTIAL APPROACHES
TO THE
DEVELOPMENT OF TRAINING FEEDBACK INFORMATION

POTENTIAL APPROACH	ADVANTAGES	DISADVANTAGES
1. Experimental Method Perform a controlled experimental study (experimental and control groups) to determine the effect of different instructional or training methods.	Highly Objective Valid Data	Requires: Much time/Cost Skilled Personnel Additional Manpower
2. Mail-Out Questionnaire Questionnaire to relate school training to later job performance is mailed to former students and/or their supervisors. Usually within 6 months post training.	Easily Performed Takes little time/cost, or additional manpower.	Technicians dislike extra paperwork. Some personnel not assigned appropriately. Low rate of return. Data is relatively superficial. Questionable validity.
3. Performance Diary Technician keeps detailed daily record of his job experiences with emphasis on situations indicating gaps or applications in school training.	Detailed specific records collected in a timely manner rather than retrospectly.	Requires unusually high degree of cooperation from technicians. Technicians dislike paper work. Limited sampling. Probable higher chances for bias.
4. Analysis of Existing Records Existing records include: 3M, the Training Evaluation Reports of the Fleet Training Group, the Work Request Forms/ Maintenance Data Forms from Repair Ships (Tenders), Records of Mobile Technical Units (MOTU)	Data relatively easily extracted. Wide sampling of ships and equipment.	Primarily oriented to hardware. Not possible to relate to the individuals level of training, or if he has actually been in a school. Limited by the accuracy and completeness of inputs. Results apparently not widely disseminated.

Table VI 5.1

POTENTIAL APPROACH	ADVANTAGES	DISADVANTAGES
5. Rotation of Fleet/Training Personnel Obtaining information from fleet personnel newly assigned to instructor duty.	Informant usually well motivated, and readily available.	Data often incomplete. Highly subjective. Limited sampling.
6. Informal Feedback Data from fleet personnel by direct word of mouth or letter regarding training.	May indicate a timely and significant problem. May offer important training suggestions based on current operational problems.	Potential is high for bias. Data usually non-specific. Very limited sampling. Questionable validity.
7. Informal Visits - Unstructured Instructor personnel visit ships, RAGS, FRAMPS as feasible to talk with appropriate technicians.	Provides direct contact with operating personnel. Shows personal interest of the school. Easier to obtain detailed data.	Lacks careful preparation. Data difficult to classify. Requires personnel skilled technically and in interviewing skills. Requires additional time/cost.
8. Visits - Structured Interview Trained personnel visit on a planned sample basis, with structured question form based on the job of the technician.	Provides direct contact with operating personnel. Shows personal interest of the school. Much easier to obtain detailed data. Easy to classify data. Provides highly valid data.	Requires additional personnel and/or additional training. Requires preparation for visits. Requires additional time/cost.

(See NPTRL Research Report SRR 72-13 Jan 1972)

Additional approaches to feedback not directly applicable across the board to all Naval Training include:

1. The FBM Weapons System Personnel and Training Evaluation Program (PTEP), OPNAVINST 1500.28A)
2. Participation of training personnel in fleet exercises.
3. Data from meetings of the Training Advisory Group (Fleet/Type Commanders level)
4. Training surveys made on special request of School/Training Commands by Naval Ship Engineering personnel or other qualified experts.
   (NAVSECNORDIV REPORT 25-72, 19 July 1972)

Table VI 5.1

N5.1.1.1A Evaluate Advantages/Disadvantages of Each Approach (Idealized)

This flow further emphasizes the need for evaluation. Such evaluation must be done within the specific operational context. For example, if the training organization is in close proximity to ships, travel may not be a significant factor to consider.

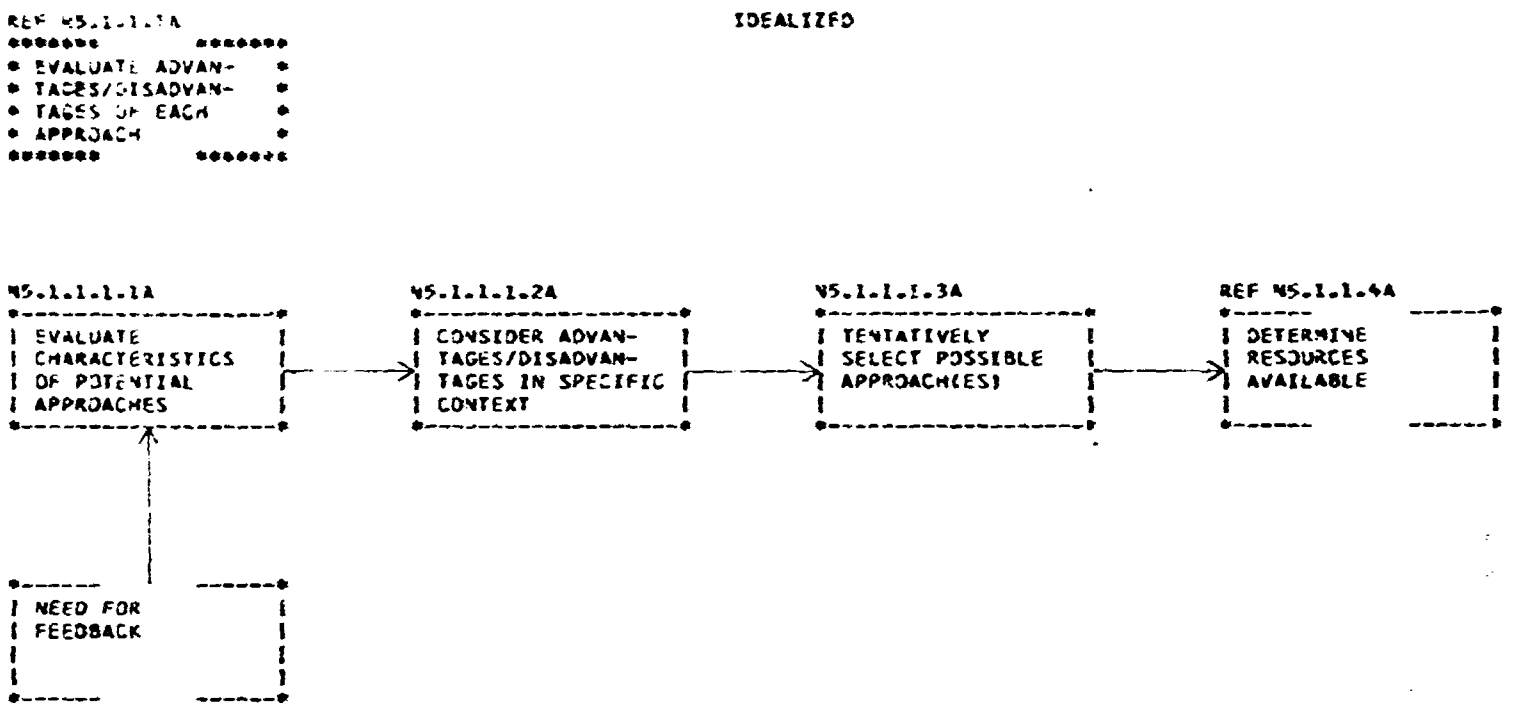

FIGURE VI M5.1.1.1A-EVALUATE ADVANTAGES/DISADVANTAGES OF EACH APPROACH (IDEALIZED)

N5.1.1.4A Determine Resources Available (Idealized)

This subfunction shows the major factors which should be evaluated in order to determine which resources are available.

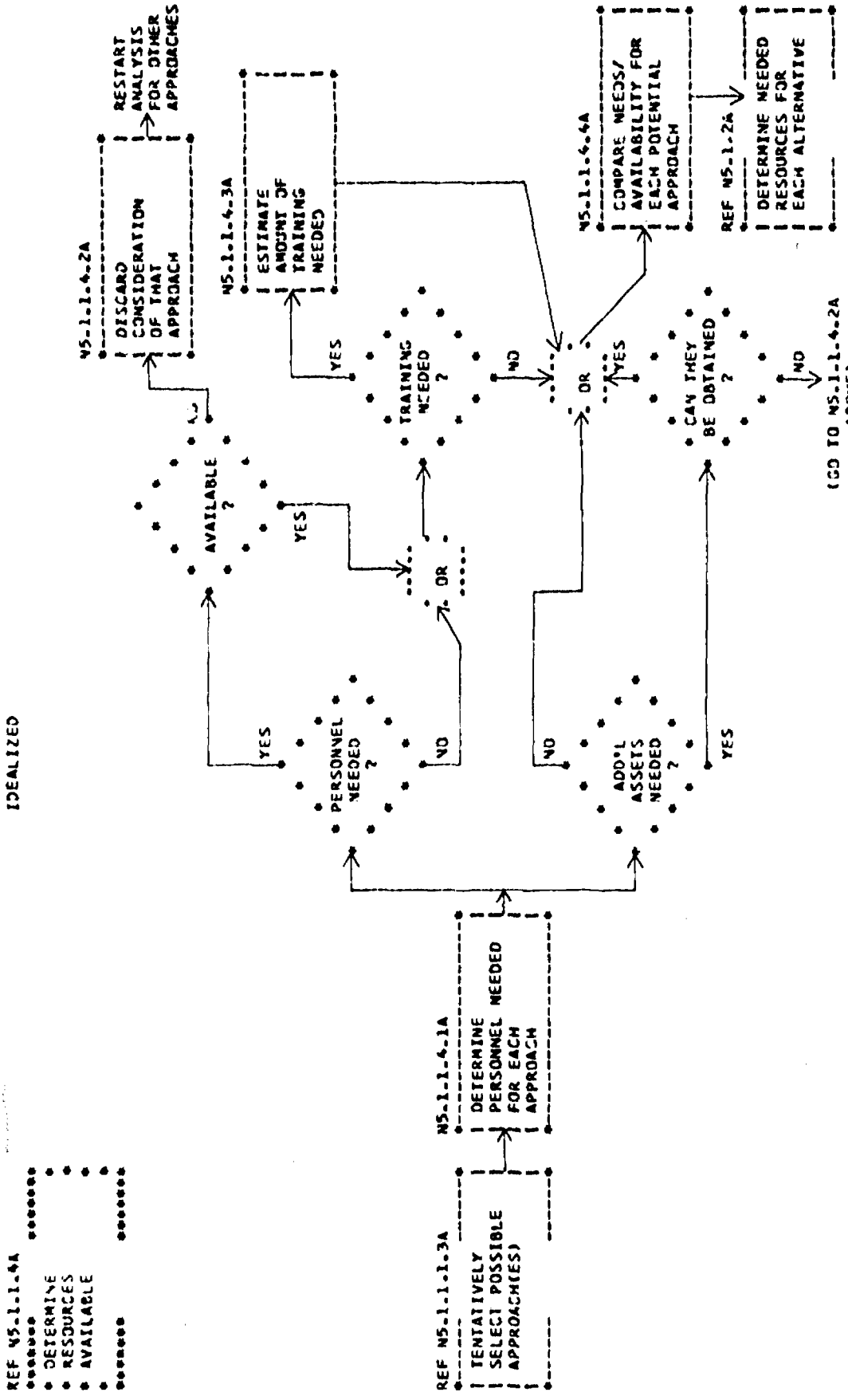

FIGURE VI N5.1.1.4A-DETERMINE RESOURCES AVAILABLE (IDEALIZED)

N5.1.2A Determine Needed Resources for Each Alternative (Idealized)

This flow shows that the resources needed for different possible approaches must be calculated, together with the impact of the needs for resources.

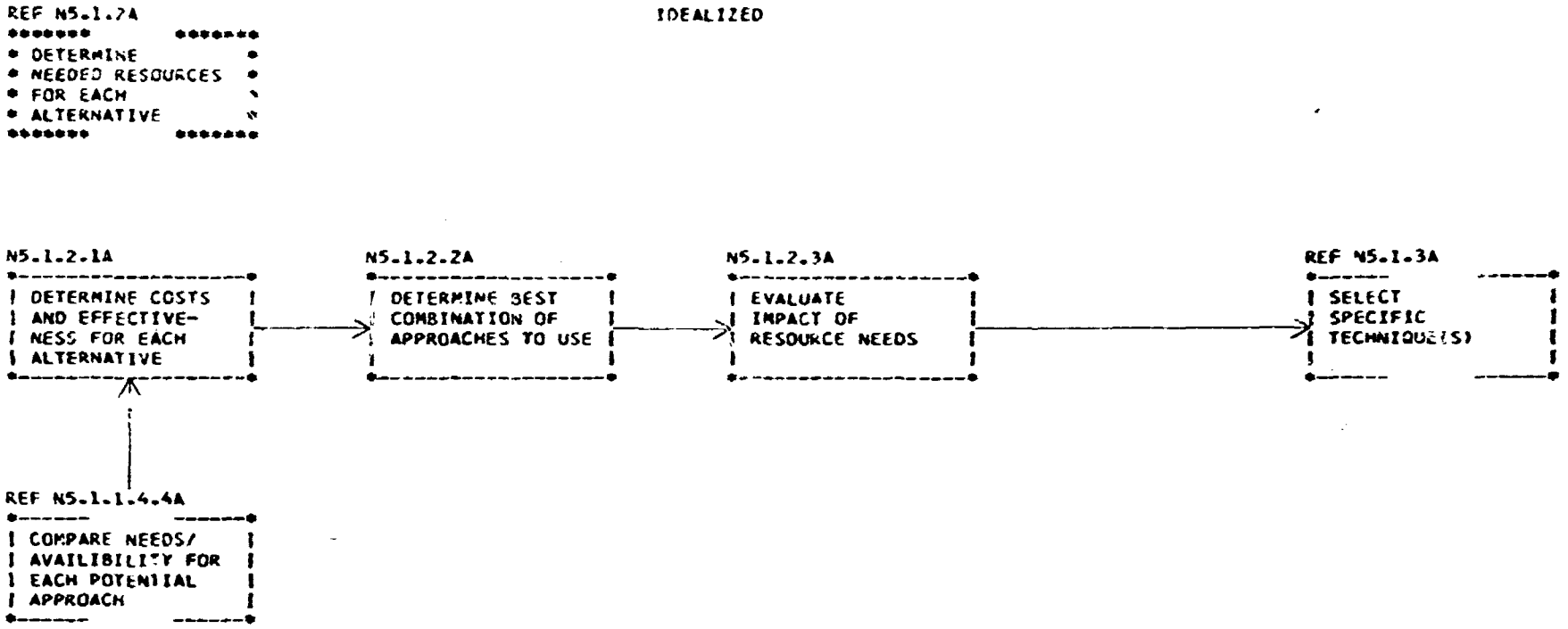

FIGURE VI N5.1.2A-DETERMINE NEEDED RESOURCES FOR EACH ALTERNATIVE (IDEALIZED)

N5.1.3A Select Specific Technique(s) (Idealized)

In the light of the preceding analysis, an intelligent selection of a method or methods, may be made. Once this is done, the major preparatory steps are considered and initiated as necessary.

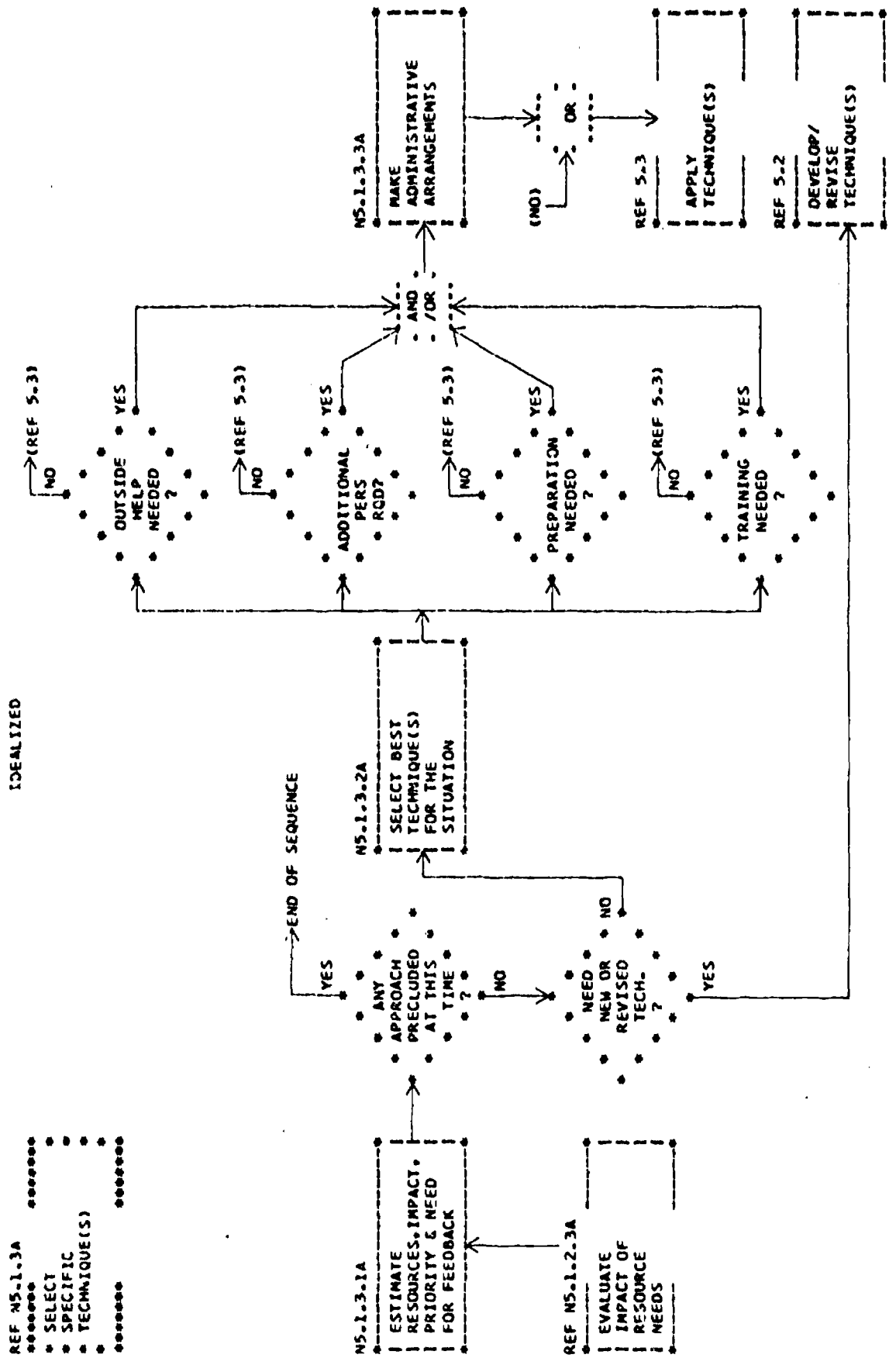

FIGURE VI N5.1.3A-SELECT SPECIFIC TECHNIQUES (IDEALIZED)

5.1 Determine Methods to be Used

In the current approach, these are the most common alternatives considered. In many cases no feedback is obtained. The most common method in use is a mail-out questionnaire.

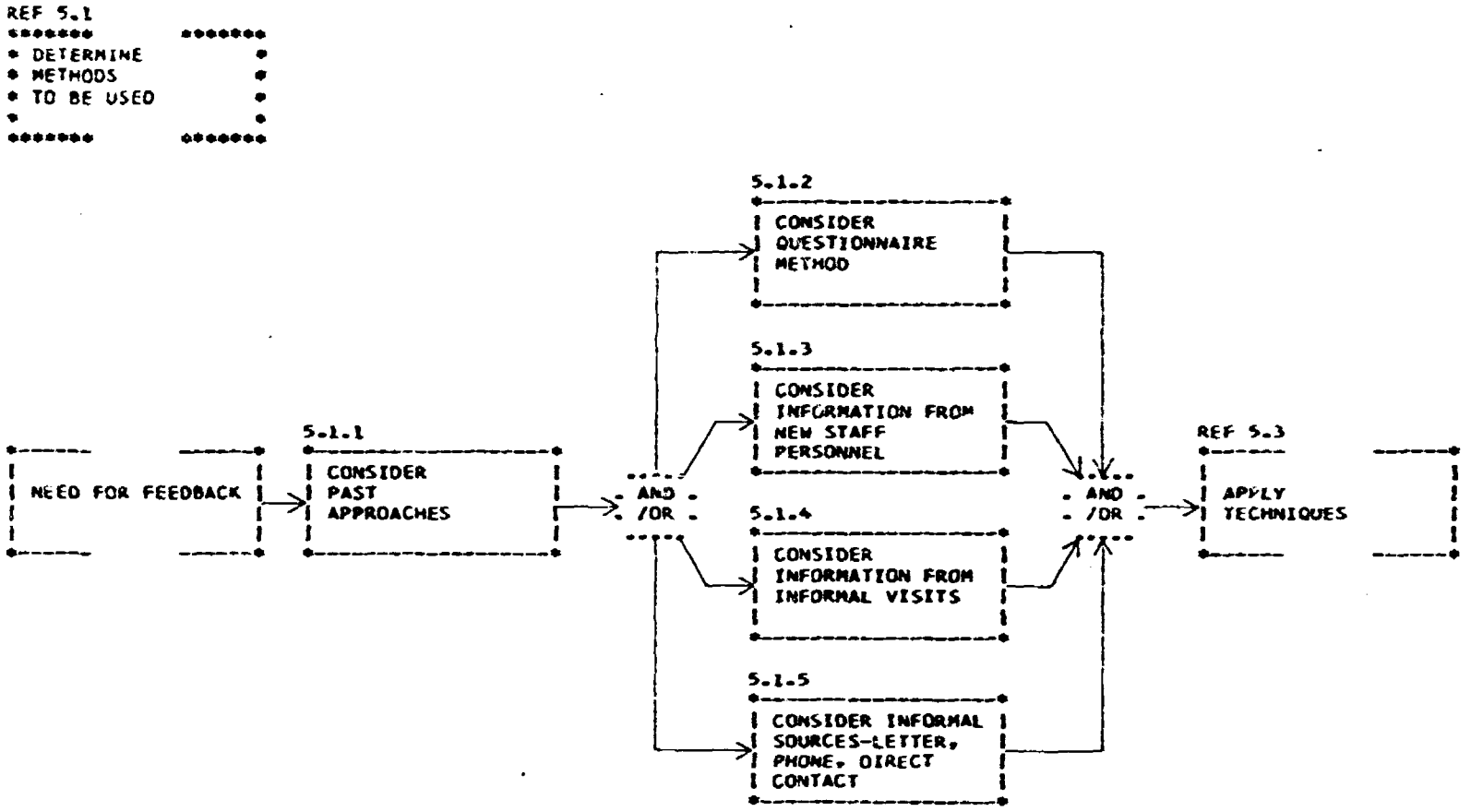

NOTE-IN A NUMBER OF INSTANCES, THE PAST APPROACH IS TO NOT OBTAIN FEEDBACK. AS A RULE, THIS TENDS TO CONTINUE. IN OTHER INSTANCES THE PAST APPROACH IS EVALUATED AS NOT WORTH THE "BOTHER", SO FEEDBACK EFFORTS ARE DROPPED OR TREATED IN A SUPERFICIAL MANNER.

FIGURE VI 5.1-DETERMINE METHODS TO BE USED

5.2 Develop/Revise Techniques

One instance was observed in which a questionnaire was revised. It seems reasonable to presume that other such situations occurred. The discussion for this function, section (e.), covers several cases in which individual schools developed or adopted methods for their use.

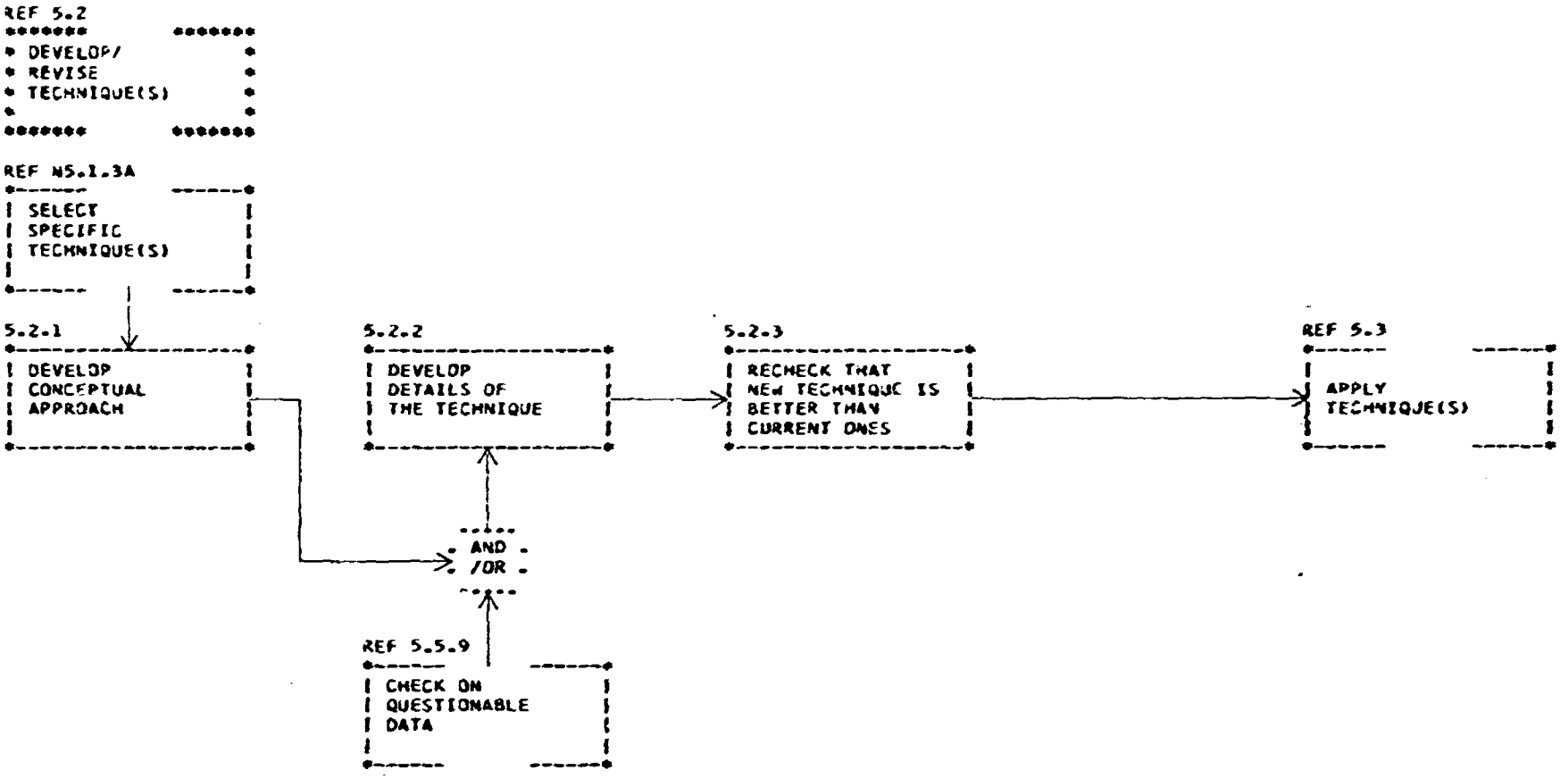

NOTE-WHILE THIS SUBFUNCTION IS RARELY CONDUCTED CURRENTLY, THE FACT THAT IT DOES OCCUR CAUSES IT TO STAND AS PART OF THE CURRENT SYSTEM, RATHER THAN OF THE IDEALIZED.

FIGURE VI 5.2-DEVELOP/REVISE TECHNIQUES

5.3 Apply Techniques

This is an over-view flow showing the broad features of obtaining feedback currently.

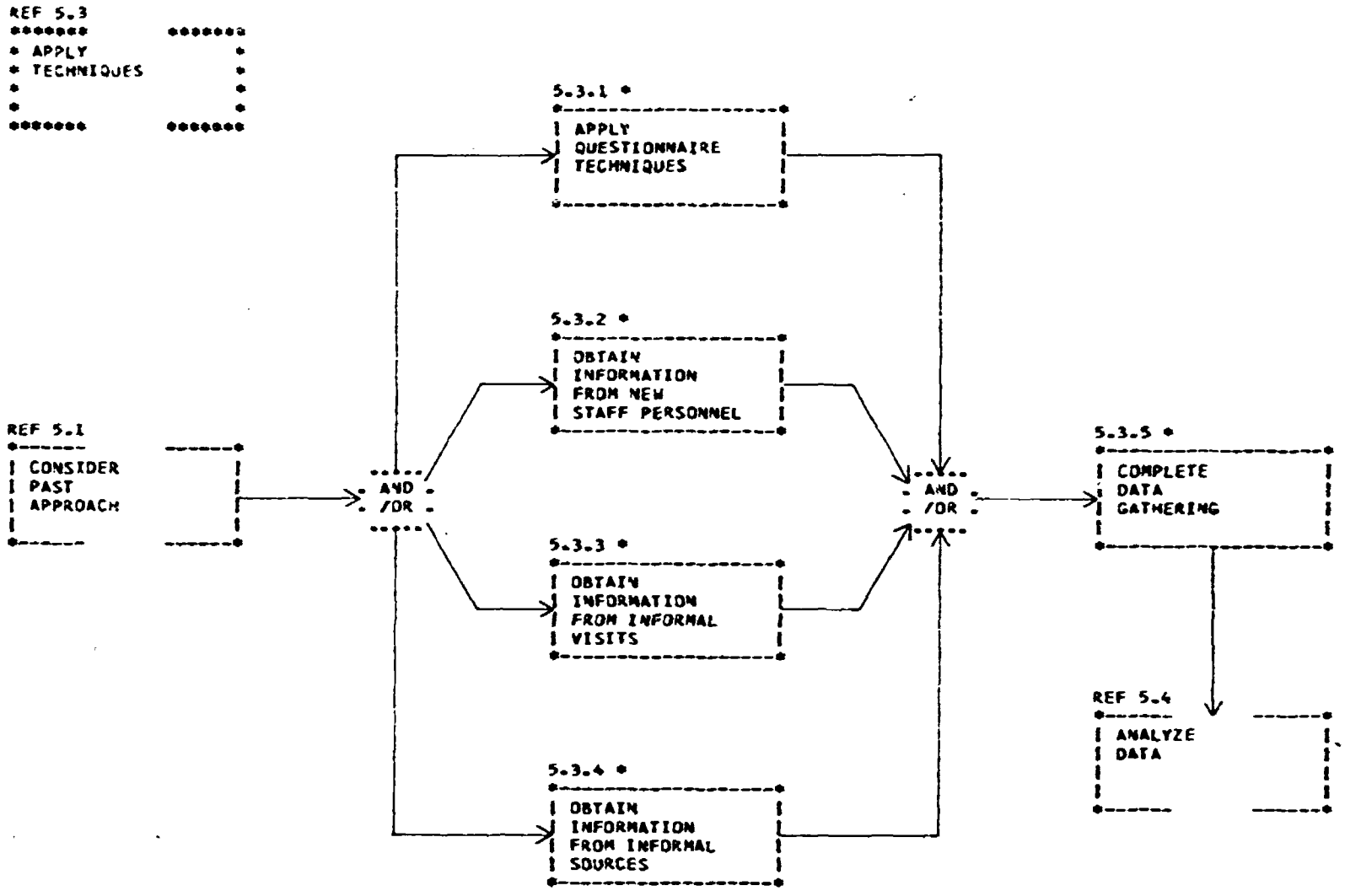

NOTE-WHERE FEEDBACK IS USED AT ALL, THESE ARE THE COMMON METHODS. IN ISOLATED CASES OTHER METHODS ARE USED BUT SUCH INSTANCES ARE RARE.

FIGURE VI 5.3-APPLY TECHNIQUES

5.3.1 Apply Questionnaire Technique

The flows and accompanying notes are self explanatory. The sequence shown is relatively the same for all those training organizations which use the question form.

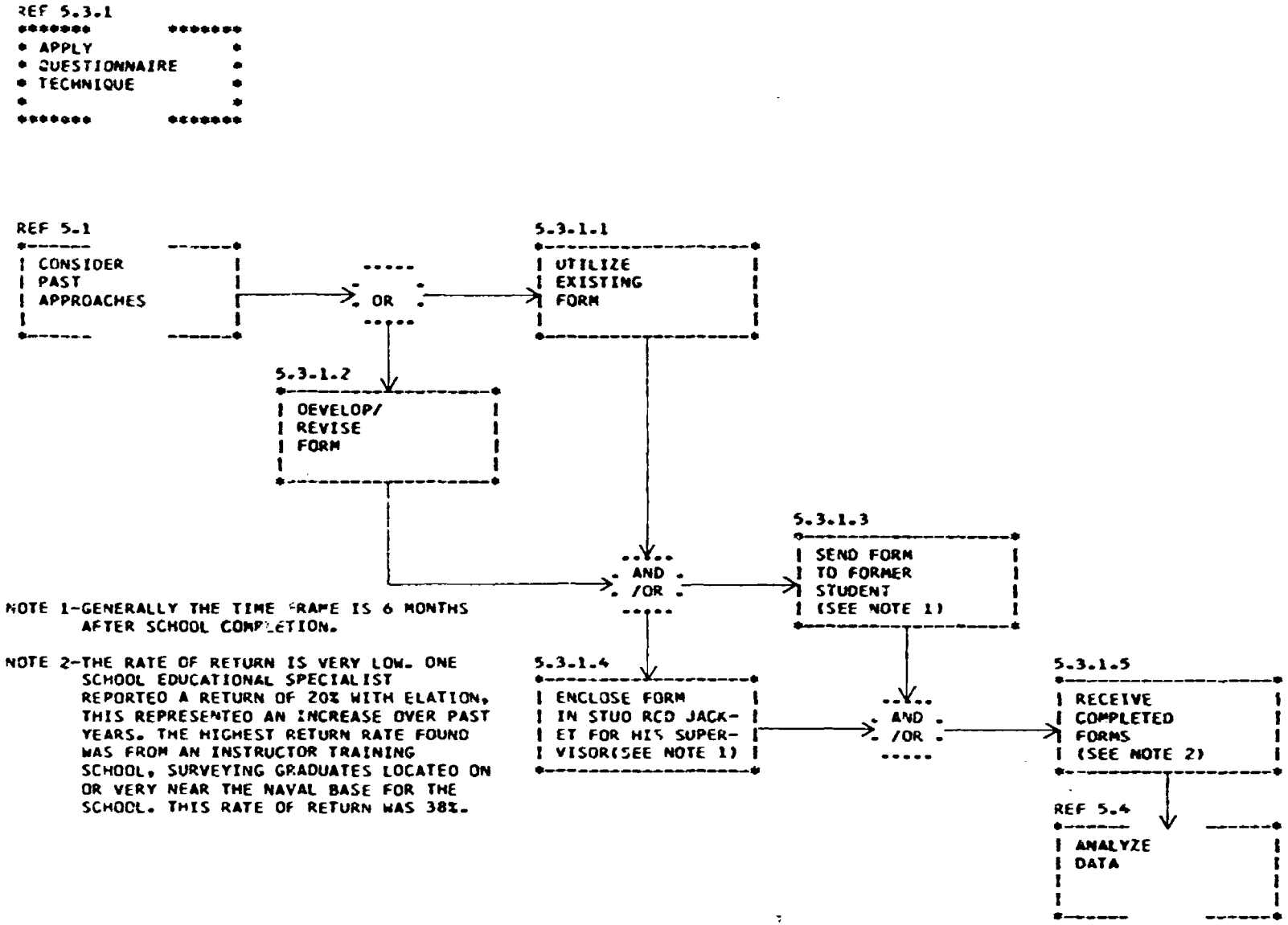

NOTE 1-GENERALLY THE TIME FRAME IS 6 MONTHS AFTER SCHOOL COMPLETION.

NOTE 2-THE RATE OF RETURN IS VERY LOW. ONE SCHOOL EDUCATIONAL SPECIALIST REPORTED A RETURN OF 20% WITH ELATION, THIS REPRESENTED AN INCREASE OVER PAST YEARS. THE HIGHEST RETURN RATE FOUND WAS FROM AN INSTRUCTOR TRAINING SCHOOL, SURVEYING GRADUATES LOCATED ON OR VERY NEAR THE NAVAL BASE FOR THE SCHOOL. THIS RATE OF RETURN WAS 38%.

FIGURE VI 5.3.1-APPLY QUESTIONNAIRE TECHNIQUE

5.3.2 Obtain Information From New Staff Personnel

The flow and accompanying note summarizes this approach.

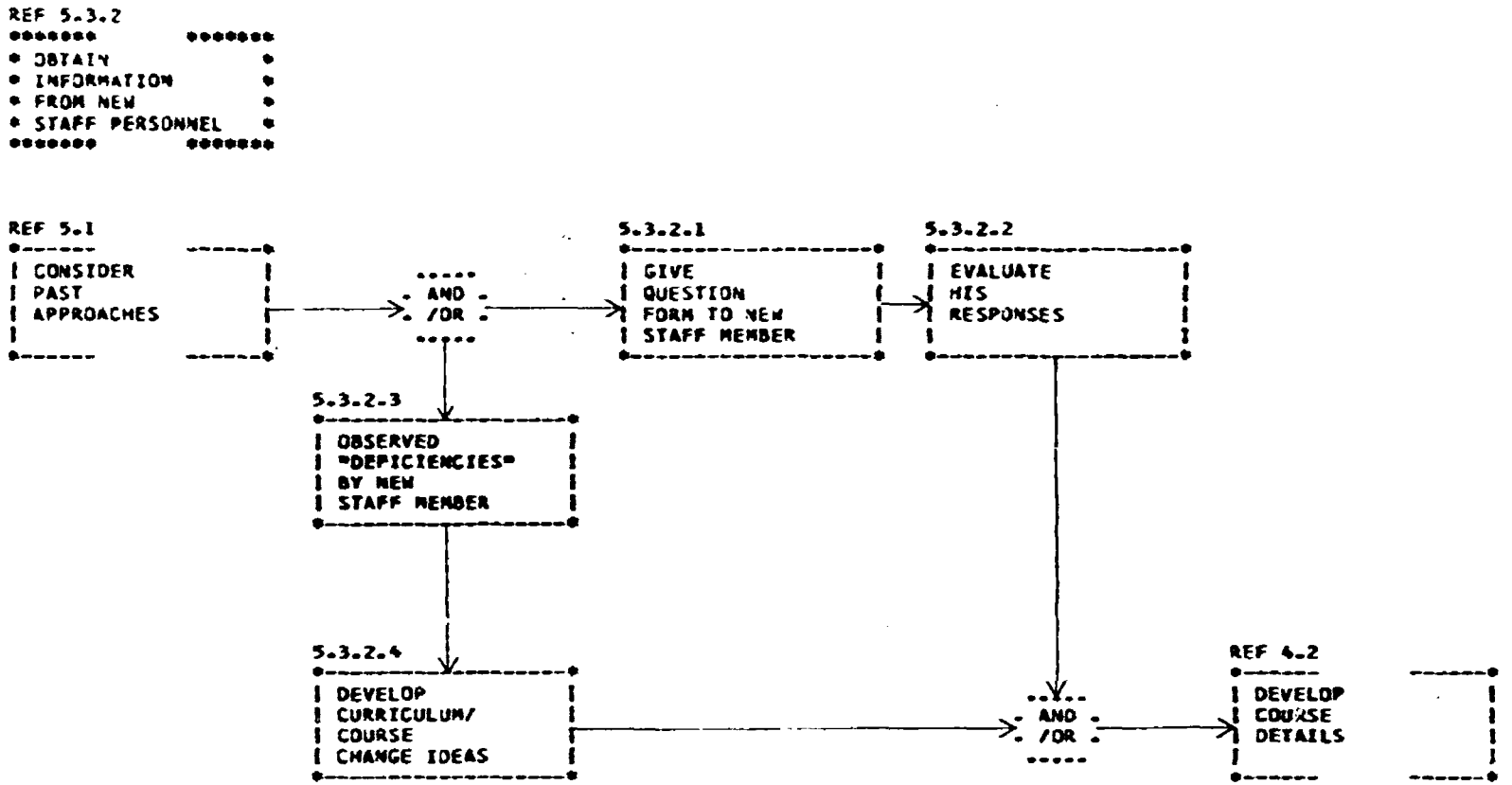

NOTE-THE ONLY OBSERVED INSTANCES OF UTILIZING THE EXPERIENCE OF PERSONNEL RETURNING FROM FLEET DUTY INVOLVED SUPERFICIAL AND RELATIVELY INAPPROPRIATE QUESTION FORMS. NO INSTANCES OF DETAILED DE-BRIEFING AND CROSS CHECKING OF RESPONSES WERE REPORTED. IN A FEW INSTANCES, NEW PERSONNEL, PUSHED FOR AND GOT MAJOR CHANGES IN COURSE DETAILS. SUCH CHANGES SEEMED TO BE DUE TO INDIVIDUAL INITIATIVE, RATHER THAN LEADERSHIP OF THE "MANAGEMENT". HOWEVER IT IS OBVIOUS THAT THE "CLIMATE" FOR SUCH CIRCUMSTANCES WAS PRESENT IN SUCH CASES.

FIGURE VI 5.3.2-OBTAIN INFORMATION FROM NEW STAFF PERSONNEL

5.3.3 Obtain Information From Informal Visits

The "interview" mentioned in 5.3.3.4 may vary from a completely non-structured discussion to a few broad questions dealing with training.

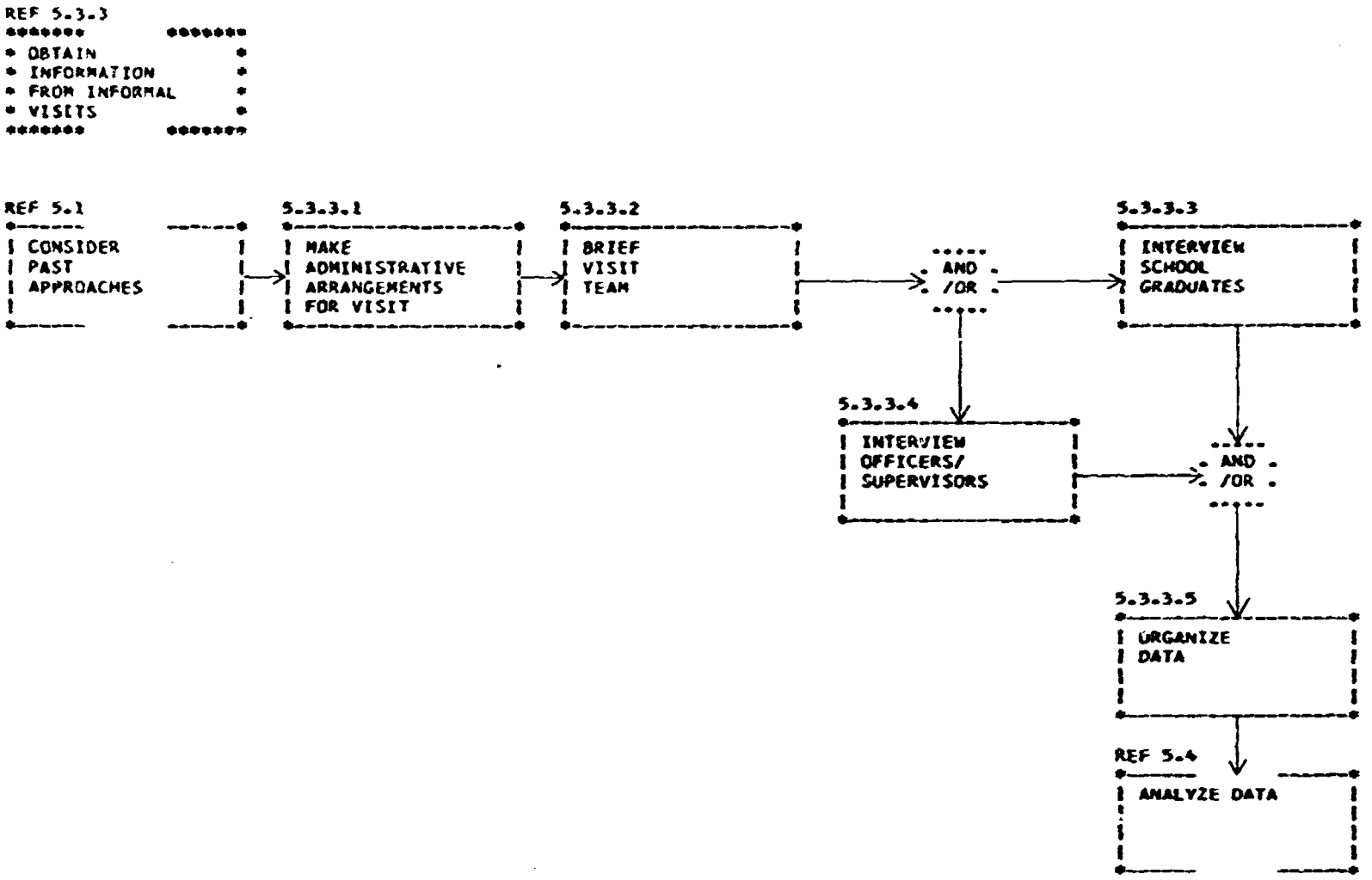

NOTE-INFORMAL VISITS INVOLVED UNSTRUCTURED INTERVIEWS. SUCH INTERVIEWS ARE BROAD IN NATURE RATHER THAN SPECIFIC. VISITS ARE GENERALLY MADE TO SHORE INSTALLATIONS OR TO SHIPS AT DOCKSIDE.

FIGURE VI 5.3.3-OBTAIN INFORMATION FROM INFORMAL VISITS

5.3.4 Obtain Information From Informal Sources

The flow and note summarize this approach succinctly and appropriately.

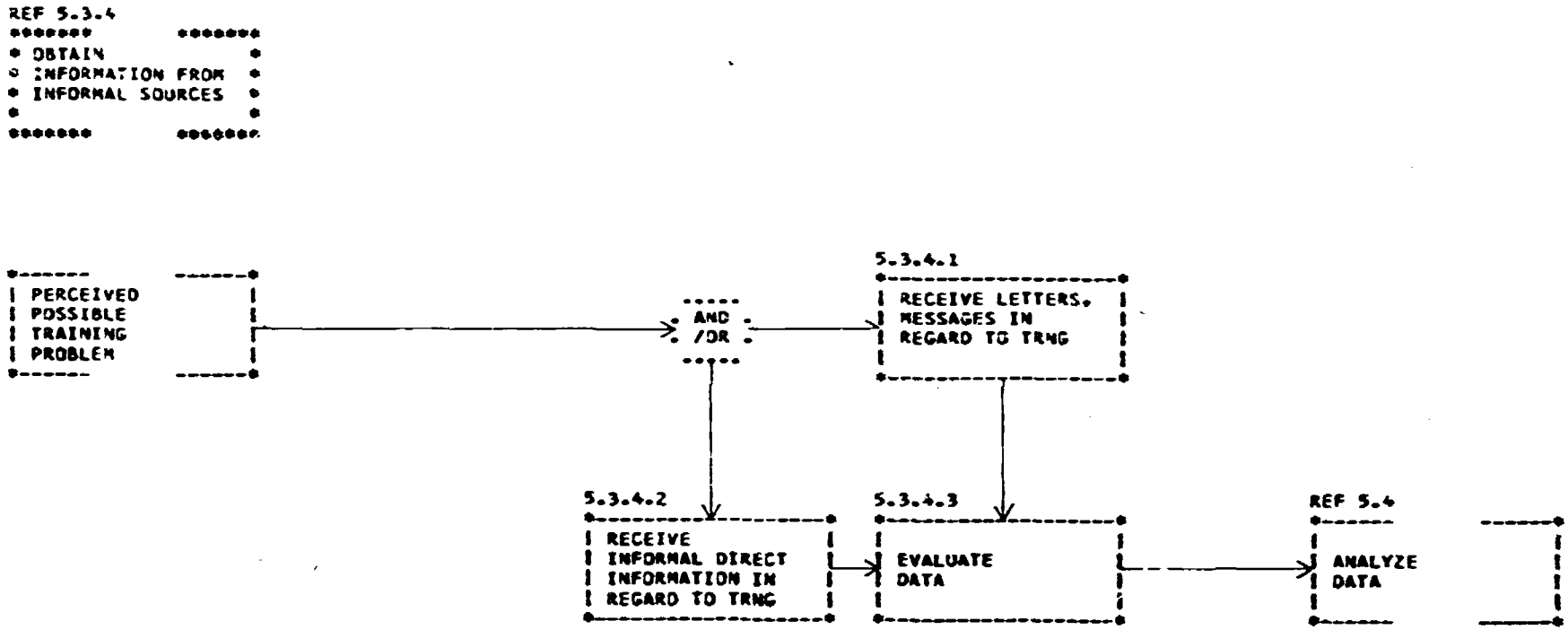

NOTE-DATA COLLECTED BY THESE MEANS TENDS TO BE SKIMPY, INCOMPLETE, AND VAGUE. HOWEVER THEY CAN BE MADE MORE HELPFUL IF A DETAILED FOLLOW-UP INTERVIEW IS PERFORMED, BY A TECHNICALLY QUALIFIED INDIVIDUAL. QUALIFICATION REFERS TO THE SKILL/JOB/PERFORMANCE AREA UNDER DISCUSSION.

FIGURE VI 5.3.4-OBTAIN INFORMATION FROM INFORMAL SOURCES

5.3A Apply Techniques (Idealized)

This subfunction covers those activities which are essential to an effective feedback technique. The preparatory actions are extremely important since the proper utilization of time, for any of the approaches, is a direct function of how well the planning has been. All forms, outlines, or other required materials should have been tried out previously. The required amount of materials must be on hand. Personnel must be trained in how to apply the technique, if necessary, and/or trained in exactly what they will do. Practice sessions are highly desirable.

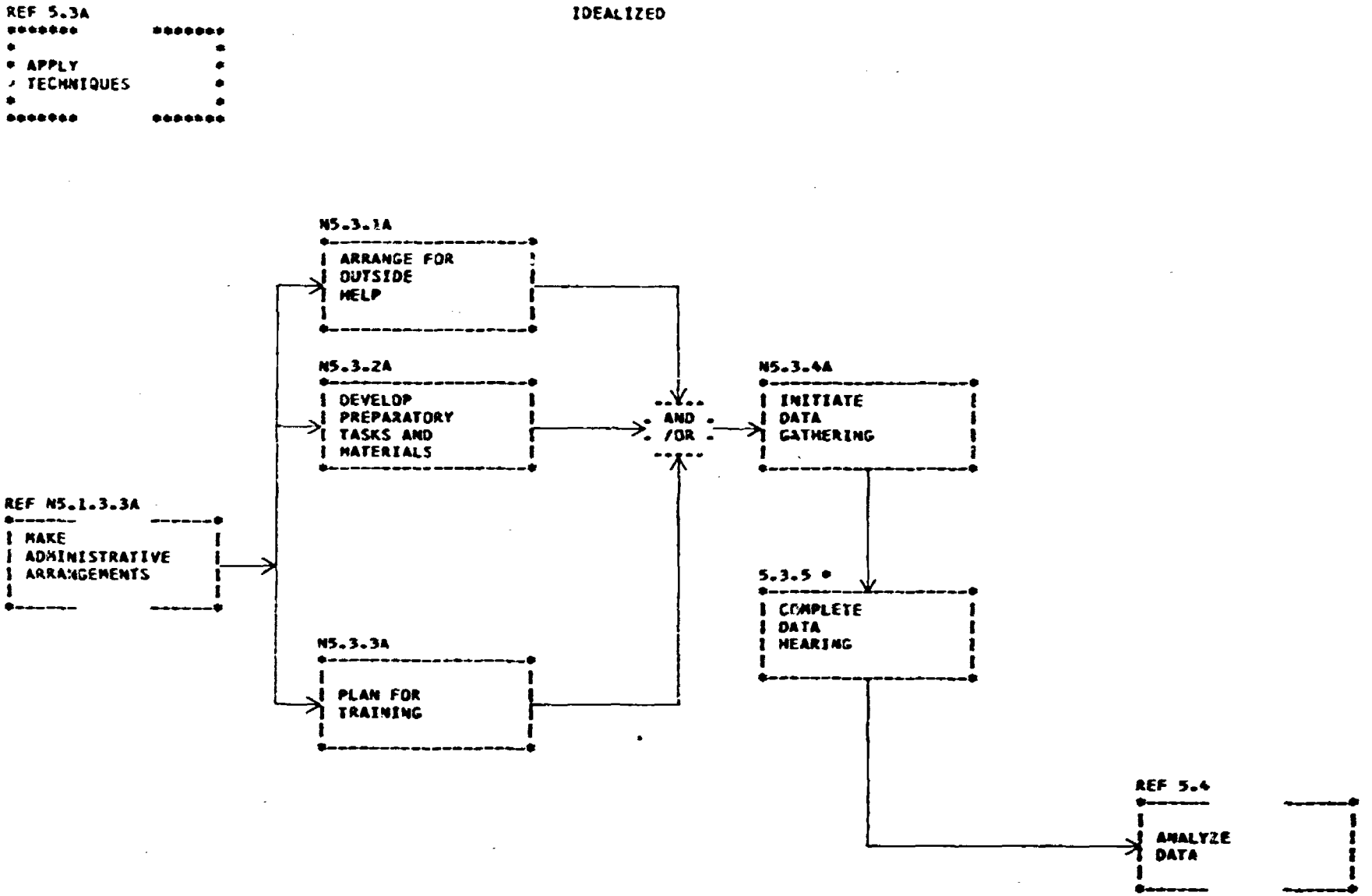

FIGURE VI 5.3A-APPLY TECHNIQUE(S) (IDEALIZED)

5.3.5 Complete Data Gathering

This flow shows the method of organizing data as gathered. It is stated broadly enough to cover all methods of data collection, but is most appropriate where some structure is imposed, such as a form or set questions.

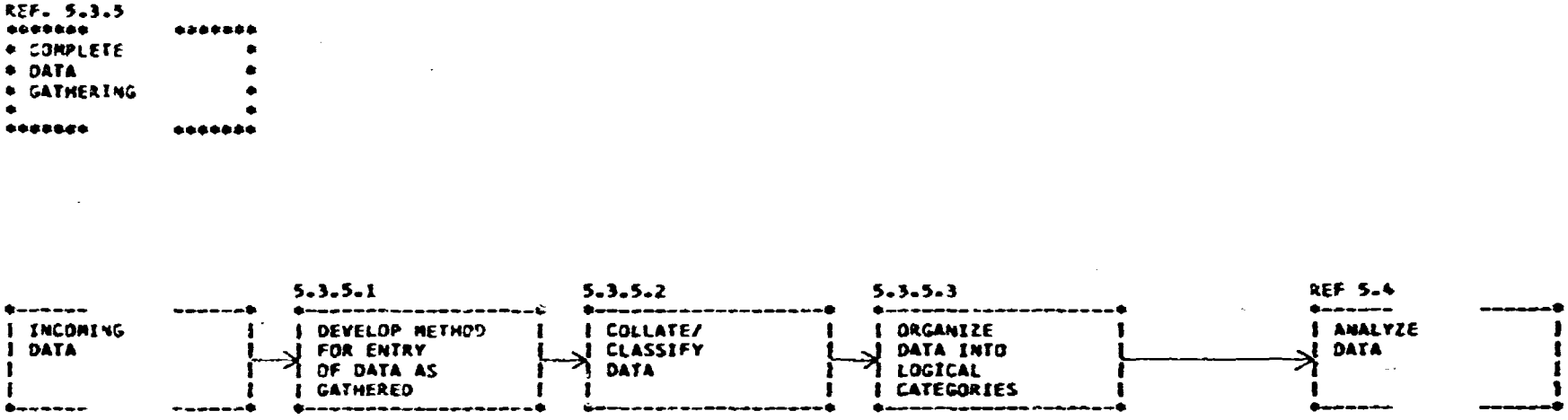

FIGURE VI 5.3.5-COMPLETE DATA GATHERING

5.4 Analyze Data

The analysis of data is a straight forward series of tasks. It is the means of collecting a mass of "observations" into a coherent totality.

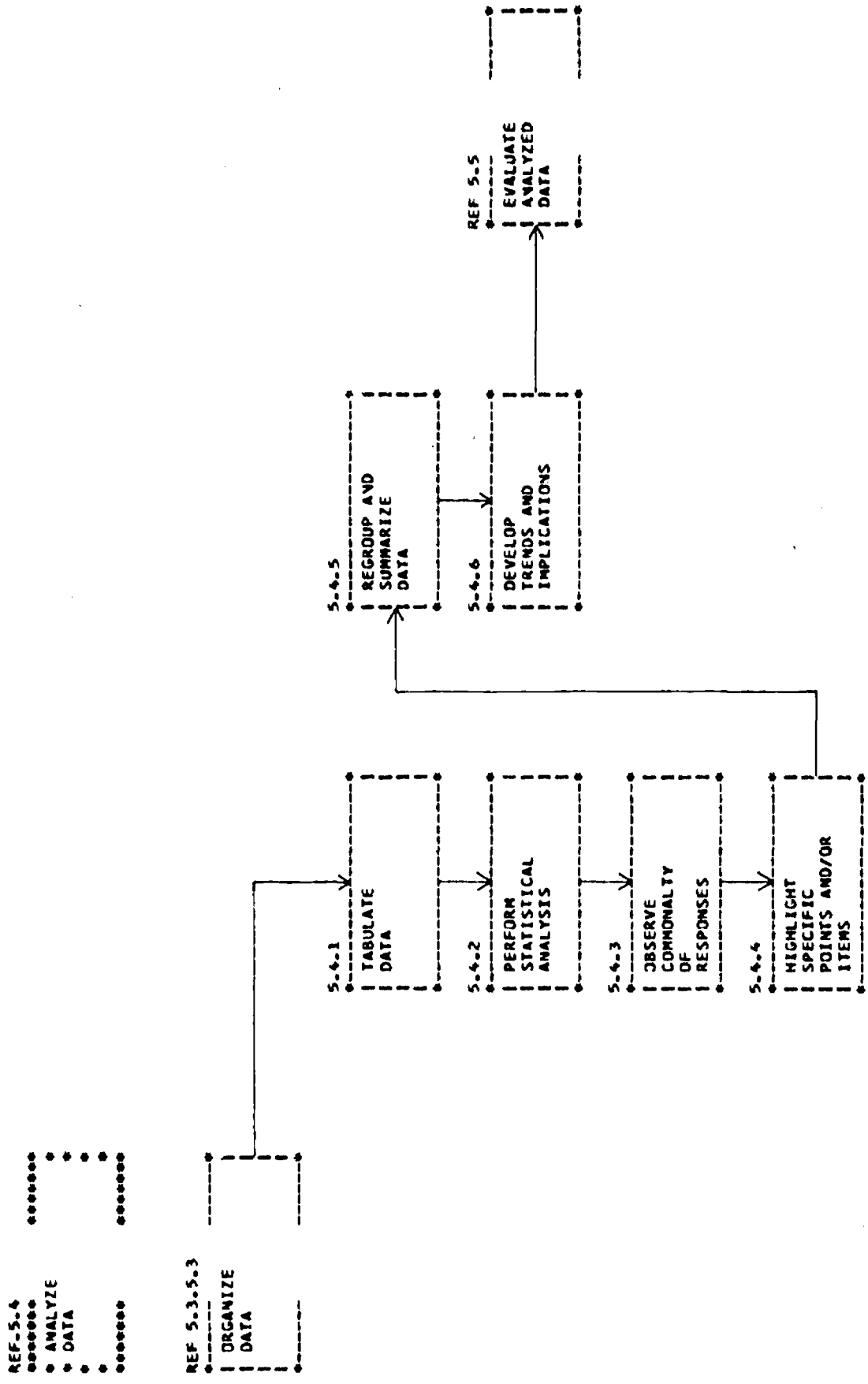

FIGURE VI 5.4-ANALYZE DATA

5.5 Evaluate Analyzed Data

This subfunction shows the steps whereby organized data is evaluated. The object here is to determine trends, to look for unusual situations, and to estimate the relationship of the results to the training. No case of any one organization going through all these tasks was found. However, a number of schools came close enough to warrant calling the subfunction a current practice, rather than an idealized one.

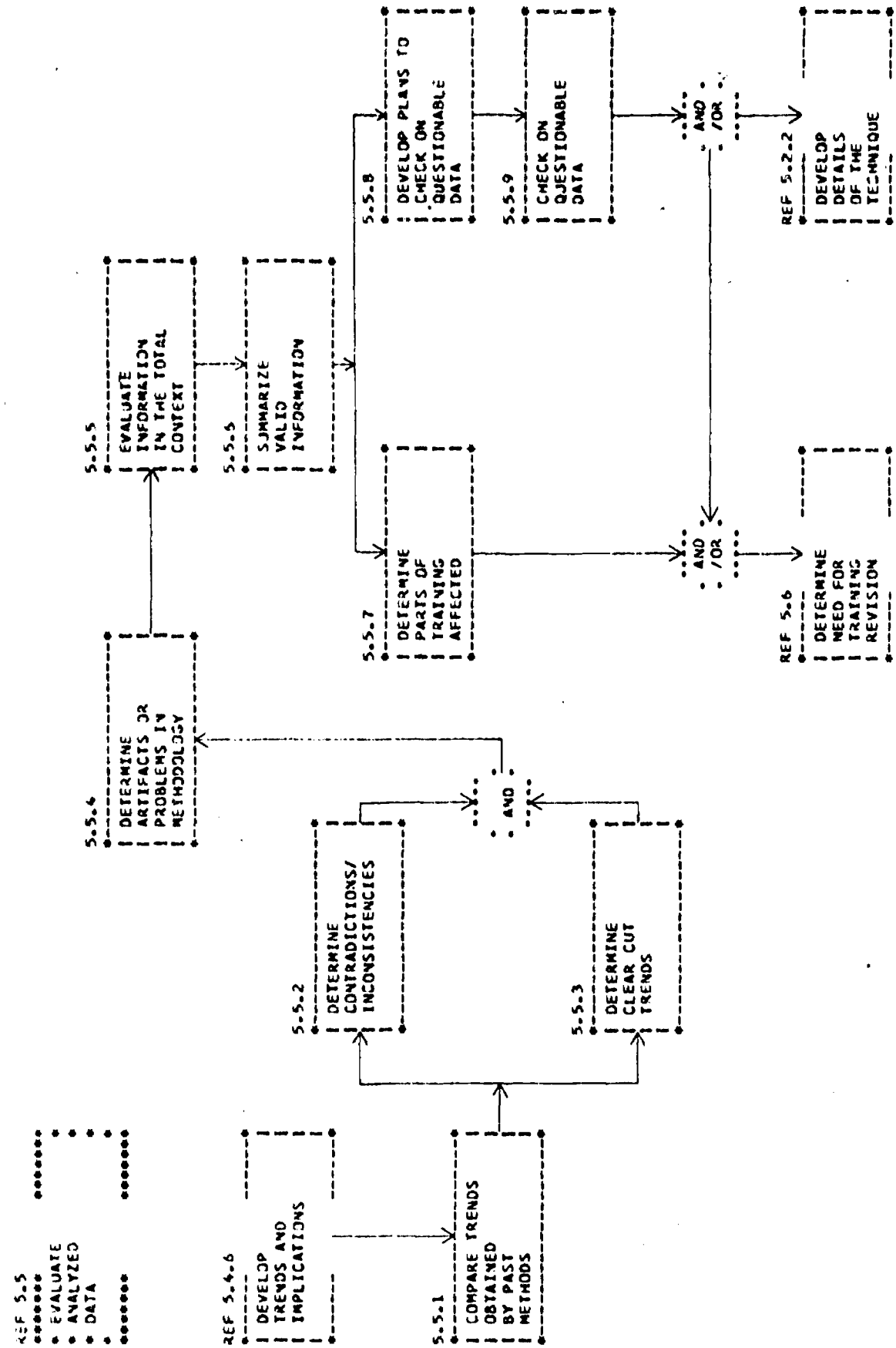

FIGURE VI 5.5-EVALUATE ANALYZED DATA

5.6 Determine Need for Training Feedback

This is the crux of feedback. Any method which does not give information definitive enough to use for course revision is worthless. This does not mean that each feedback investigation must lead to a change. It is possible that the study will show that the training is fully appropriate to the job. However, if this is not the case, the data must show what part(s) of the training is/are involved. This must be so clearly spelled out that meaningful changes may be made.

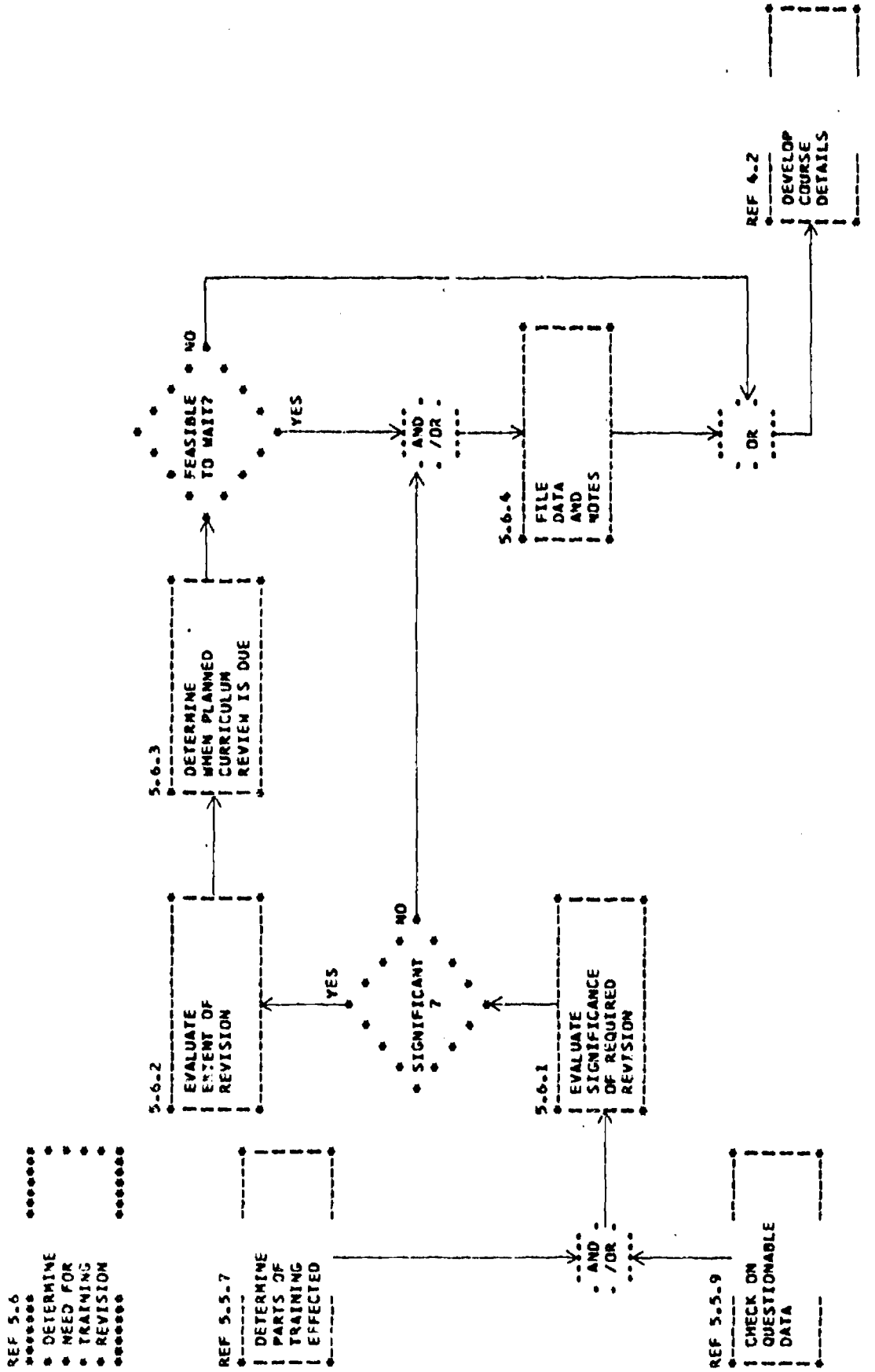

FIGURE VI 5.6-DETERMINE NEED FOR TRAINING REVISION

d. Summary of Major Technological Gaps and Problem Areas - Function 5.0 Evaluate Performance (Feedback)

1) There is apparently no clear understanding at the school house level of the high significance of feedback. As a result, a number of areas ignore it totally.

2) Where serious attempts are being made to contact school graduates or their supervisors concerning feedback, the method is almost exclusively a mailed questionnaire. The time frame is usually six months after the student leaves the course.

The rate of return for such questionnaires is very low. The highest return found was thirty-eight percent and this was given to graduates of an Instructor Training course located in the immediate vicinity of the school. When forms are to be obtained from ships at sea, the rate of return drops drastically. One training locality was enthusiastic about going as high as twenty percent under such circumstances. While no overall figures could be obtained, for the average rate of return it is probably ten percent. Furthermore, it is doubtful those that do take the time to fill out the form are representative of the total group.

Regardless of the rate of return, the questionnaires themselves leave much to be desired. Specifics are almost never addressed. Questions are so broad that almost any kind of interpretation may be used. In short, the forms are not appropriate vehicles to elicit information.

A further problem for "A" school graduates concerns the usual six-month time period. At best, the graduate may have had three months in his job role, since the usual experience in reporting on a ship is an initial three-month period as mess cook. If there are travel delays, leave, or further schooling, the delay will be even longer. It is probable that when the individual receives the question form that he has had three months or less on his job. It is not likely that he can evaluate his training meaningfully in that time.

3) Some schools utilize new people reporting from the Fleet for feedback information. The question forms are again deficient. In addition, there was no apparent recognition of the limited sampling of personnel, equipments, and ship types. The technological gap here is not in the use of such personnel for feedback, but rather in the way the data is obtained.

4) There is no integrated effort to obtain feedback but rather a series of isolated and unrelated independent approaches. This is somewhat understandable where there is just one school. However, in a number of instances, there are two or three schools, geographically separated, but teaching the same courses. No collaborative efforts to obtain feedback were found.

5) Several notable approaches were found such as the "Ship Riding" program of the EW "A" school, Naval Schools Command, Treasure Island. Apparently, the details of the approach were not known by other schools or commands, or if known, were certainly not implemented.

   This is further exemplified by the research efforts of NPTRL. This organization (now called NPRDC) has conducted a number of excellent investigations dealing with approaches to feedback. Again, there has been little or no impact on approaches to feedback. The gap is in the inadequate dissemination of information on new feedback approaches. Additional possible related problems are the apparent unwillingness of training personnel to try new techniques, or failure to provide resources for such approaches.

e. Idealized Approaches - Function 5.0 Evaluate Performance (Feedback)

One approach to idealization is as shown in the flow charts. Here a systematic evaluation of available methodologies, planning, and careful preparation is stressed. While a number of methods may be examined, it must be emphasized that each method must be considered in its most, rather than least, effective application.

To amplify this point each potential approach listed in Table VI 5.1 will be considered:

1) Experimental Method - This must be a carefully controlled experiment, properly designed and conducted in a laboratory (or near laboratory) context. It will necessitate a professional approach and a complete evaluation of the statistically stated hypotheses. It will ordinarily require from 3 to 6 months after the preparatory phases are completed. However, complex investigations may well require a year or longer. Preparation depends upon the degree of equipment and material involvement. This may take from 1 to 6 months. Subjects for the study must be those that fit into an operational situation. For the time they participate in the study, they are ordinarily unavailable for other duties.

EVALUATION - A restricted research approach which is highly valuable but is not amenable to application by non-professional personnel. Properly used, it will yield extremely valuable performance feedback information. Generally this should be a research project dealing with training (schools) involving large numbers of people, or that has special problems.

2) Mail-out Questionnaire - If this approach is desired, the questions must be carefully constructed to elicit the kind of information that could be useful in revising a course. This means completeness and thoroughness which, further, automatically means a lengthy and perhaps complicated form. Anything less, yields superficiality. Unfortunately, doing it effectively guarantees a lower rate of return than is obtained currently.

EVALUATION - This method has app al since it has seemed to be relatively easy to use. However, the information obtained has been minimal. In order to get adequate information, the form must be made in a detailed manner. This means that few such forms will be returned because of increased complexity and time to fill out. The mail-out questionnaire approach must be seriously questioned and then probably dropped.

3) Performance Diary - The Performance Diary demands a very high degree of cooperation from the technician. In addition, it requires much of his time and effort. An effective diary necessitates an effective writer also. There is a question as to how representative such technicians would be of their peer group. On the other hand, information from this kind of source would be an invaluable font of insight. The key element here is the highly capable technician who can also write in a lucid manner and who is motivated to gather this data.

EVALUATION - If personnel can be found to keep such diaries, the information contained therein would be very helpful. The odds that such people are around are slim. Moreover, the data obtained from such sources must be carefully evaluated. The fact that a capable technician feels that a part of a course helped him doesn't mean that it helped the average student. On the other hand if the "diarist" reports that he has difficulty, or cannot perform an operation which is taught in the school, a close examination of the instruction should be made.

If appropriate personnel can be found, they should be trained in the keeping of a performance diary. The voluntary nature of such participation must be emphasized, as well as the value of their efforts. Data so obtained should be carefully evaluated.

The performance diary would be of great help as a source of feedback. All that is required is the right kind of diary keeper.

4) Analysis of Existing Records - Data from records such as 3M, Maintenance Data Forms, Records of Mobile Technical Units, Fleet Training Group Reports, etc., are primarily hardware oriented. It is nearly impossible to relate hardware problems to the training that the individual has had. On the other hand, a picture may be obtained as to the most common types of problems. These can be compared to the training elements. Certainly those problems occurring most often should be treated specifically during training. One problem with these records is that they are not distributed widely. Still, a school should be able to get what it needs by request made at the proper location.

EVALUATION - To the extent that hardware is involved in the training, these records will indicate significant points to be covered in training. Some of the data might give hints/clues as to potential training problems. The worth of the data may be suspect if data inputs are limited or skimpy.

This method should be used whenever possible. The data must be regarded as indicative and should be verified by cross checking of other sources.

5) Rotation of Fleet/Training Personnel - Obtaining information about the adequacy of training from newly reporting staff personnel has great appeal. They are presumably capable, well motivated, and knowledgeable people. Certainly they could tell how effectively people from schools can operate in their jobs. Within limits, these are reasonable surmises. The limits involve the scope of the individual's experience. To what extent did he come in contact with recent school graduates? What was the nature of these contacts? In what capacity? How recent? How many people were involved? What were the specific instances? What kind(s) of equipment?

The only method observed of obtaining Fleet feedback from these people was by means of a question form. The form asked very few questions and these were of a general nature. None of these forms could be considered as meeting even minimal requirements.

EVALUATION - Elicitation of information from new personnel arriving from the Fleet could be extremely valuable. Such information must be obtained by skilled debriefing. This should take place very shortly after arrival at the training organization. Obtained information should be evaluated in the light of the respondents experience and qualifications. All opinions must be backed by his observations and preferably by critical incidents that give specific examples. Cross checks are important to validate information received. Properly performed, the method of getting feedback information from new personnel is highly valuable. If all precautions are not followed, the data may be misleading.

6) Informal Feedback - Such feedback may be by letter, phone call, personal contact, or just in passing. Most of this kind of input is broad and could be nearly meaningless. To place structure on such data, follow-up discussion should try to place meat on the bones. If the discussant can't be specific about "that lousy training" he may have seriously overstated the issue. If he can give details, significant information may be obtained.

EVALUATION - Without elaboration, broad informal comments are not helpful. With more details, significant data may emerge. Such data should be considered as a starting point for further investigation, rather than taken directly at face value.

7) Informal Visits - Unstructured - This kind of visit involves general discussion rather than a search for specific points. However, with skill and some digging, the broad areas can be directed into specific points pertinent to training. Such visits do not entail forms, checklists, or other pertinent kinds of preparation. Note taking may or may not be used. Usually it will be difficult to cover very many people under such circumstances.

EVALUATION - This approach may be helpful if the right people are contacted and proper questioning techniques are used. It is difficult to collate inputs from different personnel but not very many people can be covered anyway. Also some kind of crosscheck of responses is possible by following up leads gathered in earlier contacts.

For the most part, this approach is not as fruitful as the one to be covered next (Visits - Structured Interview). However, it does have some advantages. First, it requires little or no preparation. Second, it does not necessarily require a high degree of technical knowledge. Third, it has the distinct advantage of demonstrating to Fleet units that the training system cares enough about supporting them to come aboard.

If for some reason a training unit cannot perform structured interviews, the informal visit is worthwhile from a "public relations" point of view. Properly performed, it could extract good feedback information.

8) Visits - Structured Interview - This approach is described in detail in NPTRL Research Report SRR 72-13 (Jan. 1972). It entails the use of a structured question form based on the job of the individual. The details of the job are structured in terms of the task analysis. Forms are made to be completed in about one hour. They are administered on a face-to-face basis. There is no problem about returns or waiting months for replies. The form is completed then and there. Experimental applications of this technique (summarized in the report) have yielded excellent results which were directly applicable to the training courses. A variation of the technique applied to the Storekeeper rating also yielded highly useful feedback (SRR 72-14, Jan. 1972).

A specific outgrowth of this technique is the system proposed by the Propulsion Engineering School, Service School Command, Great Lakes. Card decks are prepared pertinent to four different jobs for BT's and MM's. Each card contains task statements obtained from the task analysis. An interview is conducted by a senior petty officer technically qualified in MM/BT operations, and is given to one person at a time. The respondent reads each card and places the card in three categories:

"Don't Do"
"Do With Difficulty"
"Do With Ease"

After all cards are sorted, the interviewer asks the reasons that cards have been placed in the first two categories.

All recording is done by the interviewer. After the interview, the immediate supervisor is asked about the individual's capabilities in four areas:

Watch Standing
PMS Checks
System Line-ups
PQS Progress

This approach is essentially a type of structured interview also.

The Ship Rider Program of the EW "A" School seems to be something between an informal and a structured program. It is much closer to the structured situation, since detailed observation and close contact is involved. A senior technician spends some time at sea aboard representative ships. Methods used vary from observation, interview, informal conversation, and review of equipment/system developments. A significant factor in these visits was that Fleet personnel were given a more detailed view of what the school was teaching and the school observers determined which publications and guides the users were employing. Specific useful information was gained and course changes have been instituted as a result.

EVALUATION - This approach is the only one found that yields consistently useful information. It possesses the advantages of the informal visit, but comes up with much more significant information. By using the existing task analysis, much of the work of preparation is reduced. Information is required, however, about frequency of operations/maintenance as well as about which tasks are performed other than those pertaining to the NEC or rating.

Visits should also determine documents, local policies, and tactics related to the utilization of the personnel of primary concern. Such additional effort may not only be most helpful to the school program, but also will further show ship personnel that the school wishes to assist them in a positive manner. Also observations may be made which will lead to the development of effective training and performance aids.

A certain amount of time and travel is required for such visits. This is well merited and is not excessive when considering the "effectiveness" along with the cost. Very cheap methods give very cheap results. Cost-effectiveness is then low. In the event that the required result is not achieved, the cost-effectiveness falls to zero. If somewhat more expensive costs give excellent results, the cost-effectiveness is high, and more feedback for the funds has been achieved.

The preceding section was a capsule analysis of the potential common methods for obtaining feedback. The "perfect" kind of feedback is the PTEP, an FBM approach listed as a footnote in Table VI 5.1. This program establishes a set of standards for essential ratings/jobs, and develops tests to determine how well the individual has achieved the standard. Each person in a position covered by tests is evaluated when he is in the off-patrol status. Results include a description of what additional training/study is necessary to bring the individual up to standard. The PTEP is used in the FBM community alone. If all areas of the Navy had circumstances similar to FBM's, this kind of approach is indeed the ultimate. However, only the FBM force has the resources of the Strategic Systems Project Office (SSPO); Blue and Gold crews; and a relatively small number of people. Consequently, a PTEP-like approach is not considered to be practical at this time for the remaining naval forces. However, individual training organizations or ships could well establish, on a limited basis, their own kind of evaluation program, with the goal of determining training needs. This would provide outstanding training feedback to the training system. In considering potential approaches, training units should consider the PTEP approach also to determine if the total approach, or parts might be feasible for their application.

The other kinds of approaches mentioned at the bottom of Table VI 5.1 might be considered as feasible and applicable for each training area. All of the listed methods offer significant potential. The most important point to be made is that a number of techniques should be used, rather than only one or two.

The approaches given represent one step toward idealizing the feedback function. They represent large steps forward, but idealization cannot stop there. A total new system approach must be developed concurrently, one that, if started soon, can bear fruit in the 1980 time frame. This is both an extension of the first methods and a new point of departure.

There are several fundamental philosophies in this "Neo-Feedback" gestation:

- Involve students in the total training-operating context so as to make them active and involved partners. This is an initial step in turning them into professionals and an essential start in getting the best feedback from them once they are on the job.

- Involve Fleet personnel as active participants in the total naval situation. While the students of today are the leaders of tomorrow, that day is some years away. Until "tomorrow," the supervisors of today must be considered.

- Enlarge the span of operations for a "school" from a strictly instructional unit, to one that includes active assistance in operational and training problems of Fleet units. Such involvement would be through CHNAVTRASUPP, who is responsible for supporting all training. The assumption here is that training and operations are not clearly separable activities.

- Operate major feedback operations on a cooperative basis through upper command levels such as Service School Commands or higher. An example of a major effort would be a ship rider program and/or structured visits.

Each of these points will be expanded in the following paragraphs. In addition, a general way of achieving these goals will be presented.

Student Involvement - The theme must be played constantly that the student is a significant member of the Navy community, that he is needed, and that he has a participatory role. This kind of indoctrination can be presented in orientations, interspersed throughout self instructional materials, but most of all through the treatment he gets and his chance to actively participate in the total process. Wide spread use of individualized instruction in itself increases participation. In addition, the idea that students can let the school know how well the training has suited them for their jobs should be stressed throughout their training and reemphasized at graduation. Another aspect that should be shown is that some of them might return to the school as students in advanced classes and finally as staff personnel.

The essential objective is to attune the student to relate his training to his job and to evaluate his training for that job. Also, to originate the expectation that at a later date he will be contacted for information about his job and the training that he had received.

A second objective is to show that there are open communication lines to the school and to encourage their use. This premise will be developed shortly.

The achievement of these objectives will plant seeds that may come to fruition some time later in the form of realistic, appropriate feedback information.

Involve Fleet Personnel - To involve Fleet personnel will require changing their attitude that they are outside "training." In order to accomplish this thoroughly, a total turnabout is necessary. Ultimately, the scene should change so a tour in training will mean to an officer what a ship command means now. However, this kind of drastic (but feasible and needed) change is not fully necessary immediately, to get more involvement of Fleet personnel. What will help is the opening of effective lines of communication as mentioned previously, and to be explained in the next paragraph.

Enlarged Span of Operations for a School - The school must realize that it is the primary seat of knowledge for its area of specialty. It will often generate excellent outlines, performance aids, references, etc., which would be invaluable on the job. Probably the most skilled technicians/operators in the specialty field are on the staff. Consequently, it is necessary for the school of the future to serve as an active direct aid to the Fleet, in addition to training personnel.

In part, this means developing effective communication channels. For example, a phone number for answering questions about training or other related technical matters may be established. Such a number should be made available to graduates, and officers/supervisors related to that specialty area. Currently, there is at least one instance of such a channel. This is for the Engineering Systems Training Division, Training Department, Fleet Training Center, San Diego. In giving their number they state:

> "This line can be used at any time to relay information of training nature to us or to request our assistance in obtaining information of a technical nautre."

This is one type of communication that is meant. Of course an FTC has the advantage of proximity to the Fleet. Thus it is necessary to encourage messages and letters as well for training areas more remote to Fleet ports. Encouragement through active solicitation is essential. However, the key is the kind of interaction that occurs. Requests for aid should be

cared for promptly and appropriately. The quality and timeliness of help is all essential. Comments on training should be explored for details as much as possible, and accepted with thanks regardless of criticism -- direct or implied.

One type of solicitation which will encourage communication to a high degree is to obtain the names and addresses of all individuals newly promoted in a particular rating, and send them letters of congratulations. Such letters should reiterate the individual's significance and his importance as a participant in the naval training loop. In addition, it should encourage his use of the open communication channels.

Another method of keeping such communication going is to maintain an active file of all personnel names, addresses, and assignments -- in that particular rating/NEC. An intermittent newsletter of technical information, requests for comments on training adequacy/needs, or new aids/charts/tips could be sent to such personnel. This kind of approach will further bind the identification of the individual to the school. Of course the keeping of such data is contingent on effective computerization and information retrieval. Smaller schools can, if necessary, maintain such records manually.

Cooperative Feedback - Currently, feedback approaches (when an effort is made) come from each school. No attempt is made to relate to "counterpart" schools or to related schools. It is apparent that duplication occurs and information is not obtained that should be. It is necessary to organize team feedback approaches. These could be of several different types:

- For schools that are located at more than one location - One "task force" group representing all locations could be organized for structured visits. Training of the team and the planning for visits should be handled by a higher command level such as CNET, CNTECHTRA, or a Service School Command/ Naval Training Center. This would cover one rating across the board and include graduates of "A" and "C" schools.

- For a number of different kinds of schools - A Service School Command contains a variety of schools from quite large to relatively small. Coordinated visits from a number of different

schools under the control of the school command have a number of compelling features. Training and preparation for the visits will be uniform.

The amount of time spent on administrative planning will be reduced, since duplication is eliminated. To an extent, the burden on the ships will be reduced also, since they would deal with a central authority, rather than a number of segments. The quality of the feedback will probably be enhanced, because of the opportunity for various individuals to exchange their experiences and methods, as well as because of the tighter management controls.

The fundamental assumption inherent in the foregoing presentation is that feedback is all important. Without adequate information about how well the training prepares personnel for their later job, there is a serious danger that the training may be deficient. Mention must be made of the fact that some students go directly to advanced training after "A" school. There is further need for feedback here in terms of how well the "A" school prepares personnel for later training. Such information must be obtained by direct technical liaison of training directors and/or instructor personnel.

The methods most emphasized as effective tend to involve travel. It is recognized that this is a problem currently because of travel restrictions. It is hoped that a close look at potential cost benefits might relieve this restriction to an extent. Use of cooperative approaches with the utilization of naval aircraft may make travel costs minimal. Also, highly effective annual feedback efforts are worth much more than poor efforts conducted more frequently.

6. Function 6.0 Manage Training Resources

a. Definition

Management of resources can be viewed as a separate subsystem, that is in contrast with the technical subsystem. The two subsystems, however, are intimately related and interact in many ways. Both subsystems are driven by requirements both internal and external to the NETS.

One of the subfunctions of resource management, "Formulate Strategic and Fiscal Guidance," while shown integral to the "Manage Resources" function drives both the technical as well as the resource subsystems. Its translation and retranslation at various command levels, however, is vital to the development of effective guidance for maintaining a viable resource management function.

The overall resource management function involves the planning (development of guidance), programming (development of program objectives), budgeting, and control of resources. Since resource needs must be estimated based upon some technical plan, the tie-ins to the technical subsystem are through the "Analyze and Plan Training" function as an input, and through the "Implement Training" function as an output.

A major subfunction of resource management observed at all command levels is "Estimate Resource Requirements." This subfunction performs the quantification of any technical plan for introduction into the programming, budgeting, and controlling of resources. While the names of the other subfunctions within resource management were chosen to roughly coincide with definitions under the Planning, Programming, and Budgeting System (PPBS), some license was taken to obtain more logical groupings at the sub-subfunctional levels. Also, to prevent repetition the estimation of resource requirements was broken out as a separate subfunction.

Any system to remain effective must have some method of evaluating itself. Therefore, a separate subfunction, "Monitor, Analyze, Evaluate, and Improve Function of Resource Management" was identified.

The major subfunctions of resource management and the more apparent ways in which they interact are shown in Figure VI 6.0 - Manage Training Resources. Several strategic documents, periodic studies and analyses, policies, and schedules provide

the more significant inputs to the system. A major objective is to have training plans quantified and incorporated into the resource management function in as accurate and timely manner as possible so that training implementation can proceed in an optimal manner without undue restriction from the resource management function. It is toward this end that functional improvements should be directed.

b. Description

The Manage Training Resources function is described through an outline which contains all of the functional elements presented in the functional flows, and in addition through an overall functional flow, Figure VI 6.0 - Manage Training Resources.

	Page
6.0 Manage Training Resources	249
6.1 Formulate Strategic and Fiscal Guidance	252
6.1.1 Develop Joint Intelligence Estimate Plan (JIEP)	
6.1.2 Perform Joint Long-Range Strategic Study (JLRSS)	
6.1.3 Develop Joint Research and Development Objectives Document (JRDOD)	
6.1.4 Develop SECDEF Planning Guidance	254
6.1.4.1 Develop Material Support Planning Guidance	
6.1.4.2 Develop Defense Policy and Planning Guidance (DPPG)	
6.1.4.3 Review of Defense and Material Support Guidance Throughout DOD	
6.1.4.4 Finalize Planning Guidance	
6.1.4.5 Develop Strategy Guidance	
6.1.4.6 Prepare Schedule for Annual PPBS Cycle	
6.1.4.7 Prepare and Issue Planning - Program Guidance Memorandum (PPGM)	
6.1.5 Develop Joint Forces Memorandum (JFM)	
6.1.6 Develop Navy Planning Guidance	256
6.1.6.1 Develop CNO Views on Strategic Objectives	
6.1.6.2 Develop Specific CNO Objectives in Support of SECDEF Objectives	
6.1.6.3 Develop Broad Guidance for POM Development	
6.1.6.4 Issue CNO Policy and Planning Guidance Document	
6.1.7 Develop JSOP Volume II - "Analysis and Force Validation"	
6.2 Develop Program Objectives Memoranda	258
6.2.1 Develop and Maintain List of Training Requirements in Priority Order	260

Page

6.2.1.1 Transmit Information Through Command Levels to Cognizant Person at CNET
6.2.1.2 Prepare Training Requirements Summary CNT Form 1500/3
6.2.1.3 Assign Plan Control Number and Enter in Control Log
6.2.1.4 Distribute Training Requirements Summary to Committee Members for Evaluation
6.2.1.5 Determine Capability to Meet Training Requirements
6.2.1.6 Review by Training Requirements Committee and Assignment of Priority
6.2.1.7 Training Requirements Committee Recommends Implementation
6.2.1.8 Recommend No Implementation to Training Priorities Board
6.2.1.9 Identify Resource Deficiencies and Lower Priority Compensation
6.2.1.10 Review by Training Priorities Board for Decisions
6.2.1.11 Place Requirement on "Add-On" List for Access in POM Cycle
6.2.2 Call for Navy Education and Training 262
6.2.2.1 Develop Specific Guidance Related to Differences in Functional Commands
6.2.2.2 Issue Guidance and Request POM Cycle Inputs
6.2.2.3 Aggregate and Prioritize Requirements
6.2.2.4 Analyze and Reprioritize Total Requirements
6.2.2.5 Submit Requirements Through Commands to Major Mission Sponsor (DNET).
6.2.3 Develop Navy Education and Training Tentative POM (TPOM) 264
6.2.3.1 Review and Constrain TPOM Input - Prioritize Addendum (DNET)
6.2.3.2 Input Resource Requirements to Navy Resource Model (NARM)
6.2.3.3 Identify Resource Shortfalls as Compared to Prior FYDP Update
6.2.3.4 Develop CNO Program Analysis Memoranda (CPAM's)(OP901)
6.2.3.5 Develop CPAM's with Identified Alternative Actions (OP901)
6.2.3.6 Assess Alternatives and Submit Impact Statements (DNET)
6.2.3.7 Working Group Assesses CPAM's and Impact Statements
6.2.3.8 Steering Committee Assesses CPAM's and Impact Statements

Page

6.2.4 Obtain Initial CNO Approval 266
6.2.4.1 CNO Executive Board (CEB) Reviews CPAM's and Recommendations
6.2.4.2 CEB Makes Tentative Decision on Each CPAM
6.2.4.3 SECNAV Amplification of SECDEF Guidance
6.2.4.4 Summarize CPAM's Identifying Over/Under Control From SECDEF Guidance
6.2.4.5 Sponsors (DNET) Assess Decisions and Develop Impact Statements
6.2.4.6 Working Group Reviews Impacts and Makes Recommendations
6.2.4.7 Steering Committee Reviews Impacts and Makes Recommendations
6.2.4.8 CEB Reviews and Recommends Final Decisions
6.2.5 Complete Approval Cycle Through CNO, SECNAV, and SECDEF 268
6.2.5.1 Reassess POM Considering Impact Statements
6.2.5.2 CNO Final Decisions and Approval of POM
6.2.5.3 Submit POM to SECNAV for Approval
6.2.5.4 Review of POM by SECNAV and Identification of Over-Controls
6.2.5.5 SECNAV Final Decisions and Approval of POM
6.2.5.6 Submit POM to OSD for Approval
6.2.5.7 Prepare Issue Papers for Review and Comment
6.2.5.8 Review of Issue Papers by Major Mission and Appropriation Sponsors
6.2.5.9 Assessment of Issue Papers by OSD
6.2.5.10 Issue Program Decision Memos (PDM's) to Sponsors
6.2.5.11 Prepare Impact Statements on PDM's
6.2.5.12 Submit Impact Statements to NAVCOMPT for Budget Markups
6.3 Formulate Budget 270
6.3.1 Call for Navy Education and Training Budget Estimates 272
6.3.1.1 Modify Prior Guidance as Required for Budget Estimate Cycle
6.3.1.2 Detail Specific Requirements for Forms and Formats of Input
6.3.1.3 Provide Control Figures by Resource Category as Required
6.3.1.4 Provide Schedule for Inputting Budget
6.3.1.5 Provide Any Background Information That Seems Relevant
6.3.1.6 Compile Information and Issue Necessary Instructions
6.3.1.7 Retranslate Instructions at Intermediate Levels of Command

6.3.2 Prepare Budget Documents and Supporting Data 274
6.3.2.1 Develop O&MN Budget Estimate 276
6.3.2.1.1 Develop Civilian Personnel Cost Analysis by Program Element
6.3.2.1.2 Develop Costs for Aircraft Operations and Flight Training
6.3.2.1.3 Develop Training and Cost Data for Service-Wide Training and Education Reports
6.3.2.1.4 Develop Initial IMRL Requirements
6.3.2.1.5 Develop Other Costs Including Reimbursables
6.3.2.1.6 Develop Facilities Management Costs (Identify Unfunded Requirements)
6.3.2.1.7 Develop Budget Submission - (CNT Form 7110/1) Per Guidance Figures
6.3.2.1.8 Develop Unfunded Requirements - (CNT Form 7130-18)
6.3.2.2 Develop OPN Budget Estimate 278
6.3.2.2.1 Develop ADP Equipment Requirements - (CNT Form 7043/1)
6.3.2.2.2 Develop IPE (Industrial Plant Equipment) Requirements - (CNT Form 7043/1)
6.3.2.2.3 Develop Film Requirements for NAVTRASUPCOM on Request
6.3.2.2.4 Develop Initial Spare Parts Requirements - (CNT Form 7130/13)
6.3.2.2.5 Develop Training Equipment/Devices Modification Requirements (CNT Form 7043/1)
6.3.2.2.6 Develop Other Legitimate OPN Requirements Costing Over $1,000
6.3.2.2.7 Prepare Detailed Justification (Different Requirement for ADP Equipment)
6.3.2.3 Develop RDT&E Budget Estimate
6.3.2.4 Develop MILCON Budget Estimate
6.3.2.5 Develop Inputs to Other Appropriation Sponsors as Required
6.3.2.6 Develop Ancillary Data for Local, Functional, etc., Report/Control Systems
6.3.2.7 Submit Budget Information to Required Department
6.3.3 Review Budget Submission and Aggregate at Each Command Level 280
6.3.3.1 Review Budget Submission for Technical Accuracy
6.3.3.2 Review Budget Submission for Reasonableness by Category

Page

6.3.3.3 Review Supporting Data for Adequacy of Justification
6.3.3.4 Negotiate With Originator to Obtain Viable Budget
6.3.3.5 Analyze Unfunded Requirements and the Priorities Assigned
6.3.3.6 Modify Unfunded Priorities as Required
6.3.3.7 Combine Unfunded Requirements in Overall Priority Order
6.3.3.8 Apply Any Known Changes Since Original Submit Request (Markup)
6.3.3.9 Combine Budget for Submission to Higher Level Commands
6.3.3.10 Prepare Impact Statements and Reclamas When Required
6.3.3.11 Submit Final Navy Training and Education Budget to NAVCOMPT
6.3.4 Conduct Hearings and Markup to Obtain Final Defense Budget 282
6.3.4.1 Conduct Hearings at NAVCOMPT to Identify Action Based upon Program Decision Memoranda
6.3.4.2 Transmit Decision to Sponsors and Major Claimants for Assessments
6.3.4.3 Develop Reclama (Sponsors and/or Major Claimants)
6.3.4.4 Review Reclamas (OP090) Make Decisions and/or Trade-offs
6.3.4.5 Markup Budget per Decisions
6.3.4.6 Submit Budget to SECNAV for Approval
6.3.4.7 Submit Budget to OSD for Review and Approval
6.3.4.8 Conduct Hearings at OSD to Identify Required Actions
6.3.4.9 Prepare Program Budget Decisions (PBD's) - Transmit to Sponsors
6.3.4.10 Sponsors Assess PBD's - May Go to Major Claimant for Impacts
6.3.4.11 Make Trade-offs and Markup Budget (NAVCOMPT)
6.3.4.12 Finalize Navy Education and Training Budget
6.3.4.13 Finalize OSD Education and Training Budget (Within Appropriation)
6.3.5 Submit Budget to Congress for Markup and Approval 284
6.3.5.1 Prepare President's Budget and Submit to Congress
6.3.5.2 Review by House Committees - Appearance of Witnesses

Page

6.3.5.3 Identification of Changes, Decrements, etc., to NAVCOMPT for Budget Markup
6.3.5.4 Review by Senate Committees - Appearance of Witnesses
6.3.5.5 Identification of Changes, Decrements, etc., to NAVCOMPT for Budget Markup
6.3.5.6 Prepare to Authorize and Appropriate Funds
6.3.5.7 OSD Allocation of Funds for Continuing Operations
6.3.6 Appropriate Funds to Permit Operation in Fiscal Year . . . . . 2[illegible]
6.3.6.1 Congress Authorizes PAMN, SCN and RDT&E Funds
6.3.6.2 Prepare DOD Appropriations Act
6.3.6.3 Prepare Appropriation Warrants
6.4 Execute Budget . . . . . 28[illegible]
6.4.1 Call for Navy Education and Training Apportionment Request 290
6.4.1.1 Modify Guidance from Budget Formulation to Fit Apportionment 292
6.4.1.1.1 Modify General Guidance to Reflect Budget Execution Requirements
6.4.1.1.2 Provide Budget Control Totals by Quarter
6.4.1.1.3 Provide Military Manpower Allowances (Officer and Enlisted)
6.4.1.1.4 Provide Reference for Latest Military Pay Rates
6.4.1.1.5 Provide Civilian Pay Information Including Pay Acceleration
6.4.1.1.6 Provide Guidance on Requirements for Additional Justification
6.4.1.1.7 Provide Instructions for Preparation of Budget
6.4.1.1.8 Provide Schedule for Submission of Budget
6.4.1.1.9 Provide Forms for Budget Submission
6.4.1.1.10 Provide Other Guidance and Costing Information as Desired
6.4.1.2 Develop Specific Guidance Related to Differences in Functional Commands
6.4.1.3 Retranslate Instructions At Intermediate Levels of Command
6.4.1.4 Lower Commands Issue Get Ready Instructions
6.4.2 Modify and/or Prepare Budget and Supporting Data 294
6.4.2.1 Collect Certain Preparatory Data to Insure Enough Time for Budget
6.4.2.2 Begin Preparing Updated Budget Supporting Documents
6.4.2.3 Develop O&MN Budget
6.4.2.4 Develop Other Appropriation Budgets as Required

Page

6.4.2.5 Provide Information on Reimbursables from Appropriate Sources
6.4.2.6 Submit Budgets to Higher Level Commands for Review and Approval
6.4.3 Authorize and Allocate Resources 296
6.4.3.1 CNO/NAVCOMPT Review Apportionment Request
6.4.3.2 Prepare and Submit Apportionment Request to OSD
6.4.3.3 Conduct Apportionment Hearings
6.4.3.4 Identify Areas in Which Spending is to be Deferred
6.4.3.5 Finalize OSD Apportionment
6.4.3.6 Provide Authorization to Expend Funds
6.4.4 Enger Budget and Supporting Data into Appropriate System 298
6.4.4.1 Update Financial Plan
6.4.4.2 Verify that New Obligational Authority (NOA) Matches RA2168-1
6.4.4.3 Validate Plan for Reimbursable Expenses
6.4.4.4 Prepare Final Plan Forms for Submission to Functional Command
6.4.4.5 Update Data to Reflect Present Approved Operating Plan
6.4.4.6 Prepare Final Plan Forms for Entry into Appropriate System
6.4.4.7 Enter Plans and Other Data into Appropriate Data Processing System . . . 300
6.4.4.7.1 Input to Data Services Center and Authorized Accounting Activity
6.4.4.7.2 Enter Plan into Data Processing System
6.4.4.7.3 Input Programmed Student Input to TRAD
6.4.4.7.4 Input Class Schedules into FTDS (MCRF)
6.4.4.7.5 Input Instructor Scheduling Plan Data
6.4.4.7.6 Input Other Technical and Technical/Financial Data as Desired
6.4.4.7.7 Input Staff Descriptive Data
6.4.4.7.8 Input Supply Data
6.4.5 Obtain Information from Various Resource/Technical Systems 302
6.4.5.1 Record Financial and Other Transactional Data as They Occur
6.4.5.2 Verify Accuracy of Data and Test Reasonableness
6.4.5.3 Prepare Required Input Forms and Submit to DP Activity

Page

6.4.5.4 Print and Distribute Reports to Various Levels of Command 304
6.4.5.4.1 Provide Budget Execution Progress Report
6.4.5.4.2 Provide Budget Class/Functional Category/Expense Element Report
6.4.5.4.3 Provide Cost Center Detail Expense Report
6.4.5.4.4 Provide Performance Statement
6.4.5.4.5 Provide Operating Budget Financial Report
6.4.5.4.6 Provide Weekly Fund Status Report
6.4.5.4.7 Provide Report of Civilian Employment by Appropriation
6.4.5.4.8 Provide Military Services Accounting Report
6.4.5.4.9 Provide Other Financial, Personnel, and Miscellaneous Reports
6.4.5.4.10 Provide Various Cost of Training, Training Statistics, etc., Reports
6.4.5.4.11 Distribute Reports to Appropriate Command Level
6.4.6 Control Resources 314
6.4.6.1 Make Comparisons of Planned Resources to Actual Usage
6.4.6.2 Analyze and Evaluate Identified Variations
6.4.6.3 Assess if Action is Required
6.4.6.4 Take Appropriate Actions to Correct Variations
6.5 Estimate Resource Requirements 316
6.5.1 Develop Student Load Requirements 318
6.5.1.1 Develop Rating Entry Requirements Using STAPLAN ("A" School Requirements)
6.5.1.2 Develop "B" School Input Requirements
6.5.1.3 Develop NEC Awarding "C" School Input Requirements 320
6.5.1.3.1 Adjust Requirements for Sea/Shore Rotation and TP&P Factors
6.5.1.3.2 Develop Requirements for End-of-Year for Five Years by NEC
6.5.1.3.3 Adjust Inventory by Losses/Gains and Accessions
6.5.1.3.4 Develop Inventory Figures by NEC for Five Years
6.5.1.3.5 Determine Growth Requirements (Requirements Less Inventory)
6.5.1.3.6 Develop Numbers of Students Required Out of School by NEC (5 years)
6.5.1.3.7 Check Each NEC for Special Requirements Peculiar to the NEC

Page

6.5.1.3.8 Make Necessary Adjustments
6.5.1.3.9 Finalize and Distribute NEC Awarding "C" School Plan
6.5.1.4 Develop Pilot and NFO Training Rate (PTR and NFOTR)
6.5.1.5 Develop Non-Air Officer Training Input Requirements (Professional Acquisition, etc.)
6.5.1.6 Develop Unprogrammed Training Requirements
6.5.1.7 Assess Capability to Meet Training Requirements (Training Command)
6.5.1.8 Negotiate New Training Input Number or Resource Amount
6.5.2 Develop Staff (Manpower) Requirements 322
6.5.2.1 Use Historical Data for Similar Courses to Figure Manpower Requirements
6.5.2.2 Develop Factors by Course Phase if Possible
6.5.2.3 Apply Planning Factors to Develop Manpower Requirements
6.5.2.4 Develop Direct and Overhead Student Related Requirements
6.5.2.5 Develop Non-Student Related Manpower Requirements - e.g., R&D Projects
6.5.2.6 Summarize Total Requirements
6.5.2.7 Determine Mix of Military and Civilian Billets
6.5.2.8 Establish Types and Costs for Civilian Manpower
6.5.2.9 Determine Types of Military Personnel for Input to MPN Budget
6.5.3 Develop Equipment Requirements
6.5.4 Develop Facilities Requirements
6.5.5 Develop Other Requirements
6.6 Monitor, Analyze, Evaluate, and Improve Function of Resource Management 324
6.6.1 Insure System Objectives Exist and are Realistic 326
6.6.1.1 Determine Reason for Non-Existence of Objectives
6.6.1.2 Have Objectives Developed
6.6.1.3 Determine if System Objectives Are Known to Users
6.6.1.4 Determine Reasons for lack of Communication
6.6.1.5 Take Action to Promulgate Objectives
6.6.1.6 Sample Users for Reasonability of Objectives to Identified Needs

Page

6.6.1.7 Analyze Non-Realistic Objectives and Correct Where Required
6.6.2 Establish Methods to Monitor System Inputs, Outputs, and Processes 328
6.6.2.1 Establish Input Quality Tracking Methods
6.6.2.2 Establish Data Processing Reliability/ Availability Reports
6.6.2.3 Establish Methods for Checking Timeliness of Reports to Users
6.6.2.4 Establish Methods for Checking Usefulness of Reports to Users
6.6.2.5 Establish Monitoring and Reporting Groups of Individuals
6.6.2.6 Establish Reporting Methods, Routings, and Frequencies
6.6.2.7 Identify Action Requirements for Various Problem Categories
6.6.3 Evaluate System in Relationship to Overall System 330
6.6.3.1 Review Overall System Objectives
6.6.[illegible] Verify Objectives of Subsystem are Compatible
6.6.[illegible] Negotiate to Achieve Compatible Objectives
6.6.[illegible] Identi[illegible] Major Interfaces Between Systems
6.6.3.5 Assess [illegible]erfaces for Data Compatibility
6.6.3.6 Assess [illegible]erfaces for Timing Relationships
6.6.3.7 Assess Inter[illegible]ces for Overall Workability
6.6.3.8 Define Problems in System/Subsystem Relationships and Propose Solutions
6.6.4 Evaluate System Inputs, Outputs, and Processes for Effectiveness 332
6.6.4.1 Review Overall System Objectives
6.6.4.2 Analyze Outputs of Established Monitoring Techniques
6.6.4.3 Assess Outputs for Agreement with System Objectives
6.6.4.4 Assess Outputs for Agreement with User Needs
6.6.4.5 Assess Intra-System Interfaces
6.6.4.6 Assess Interface to Overall System
6.6.4.7 Define Problems within System and Propose Solutions
6.6.5 Analyze Trends and Determine Future System Needs 334
6.6.5.1 Maintain Awareness of Applicable Techniques
6.6.5.2 Maintain Awareness of Trends in Data Processing Capabilities
6.6.5.3 Maintain Awareness of Trends in User Needs
6.6.5.4 Maintain Awareness of Problems/Studies and Solutions

Page

6.6.5.5 Conduct Analyses and Studies to Define Future System Needs
6.6.5.6 Develop Potential Solutions to Future System Needs
6.6.5.7 Compare Trends, etc., to Proposed Solutions on a Continual Basis
6.6.5.8 Formalize Solutions to Meet Identified RMS Needs
6.6.6 Develop Resource Management System Improvements 336
6.6.6.1 Evaluate and Classify Problems and Proposed Solutions
6.6.6.2 Prioritize Overall Needs for Improvement to RMS
6.6.6.3 Select Areas for Further Development
6.6.6.4 Insure Development Will be Consistent with Objectives
6.6.6.5 Develop Final Proposals to Justify Funding Request
6.6.6.6 Seek Required Funding
6.6.6.7 Establish Final Overall Development Schedule
6.6.6.8 Perform System Analysis to Insure User Needs are Met
6.6.6.9 Develop Specifications for System Improvements
6.6.6.10 Develop RMS System Improvement
6.6.7 Implement Changes to Resource Management System 338
6.6.7.1 Insure Adequacy of User Personnel
6.6.7.2 Train User Personnel on System Modification
6.6.7.3 Verify Phase-In Schedule is Realistic (Modify as Required)
6.6.7.4 Install Improvement - Parallel Operations if Required
6.6.7.5 Checkout and Validate Improvement Meets Specifications
6.6.7.6 Correct Any Identified Deficiencies
6.6.7.7 Turn Operational Responsibility Over to User

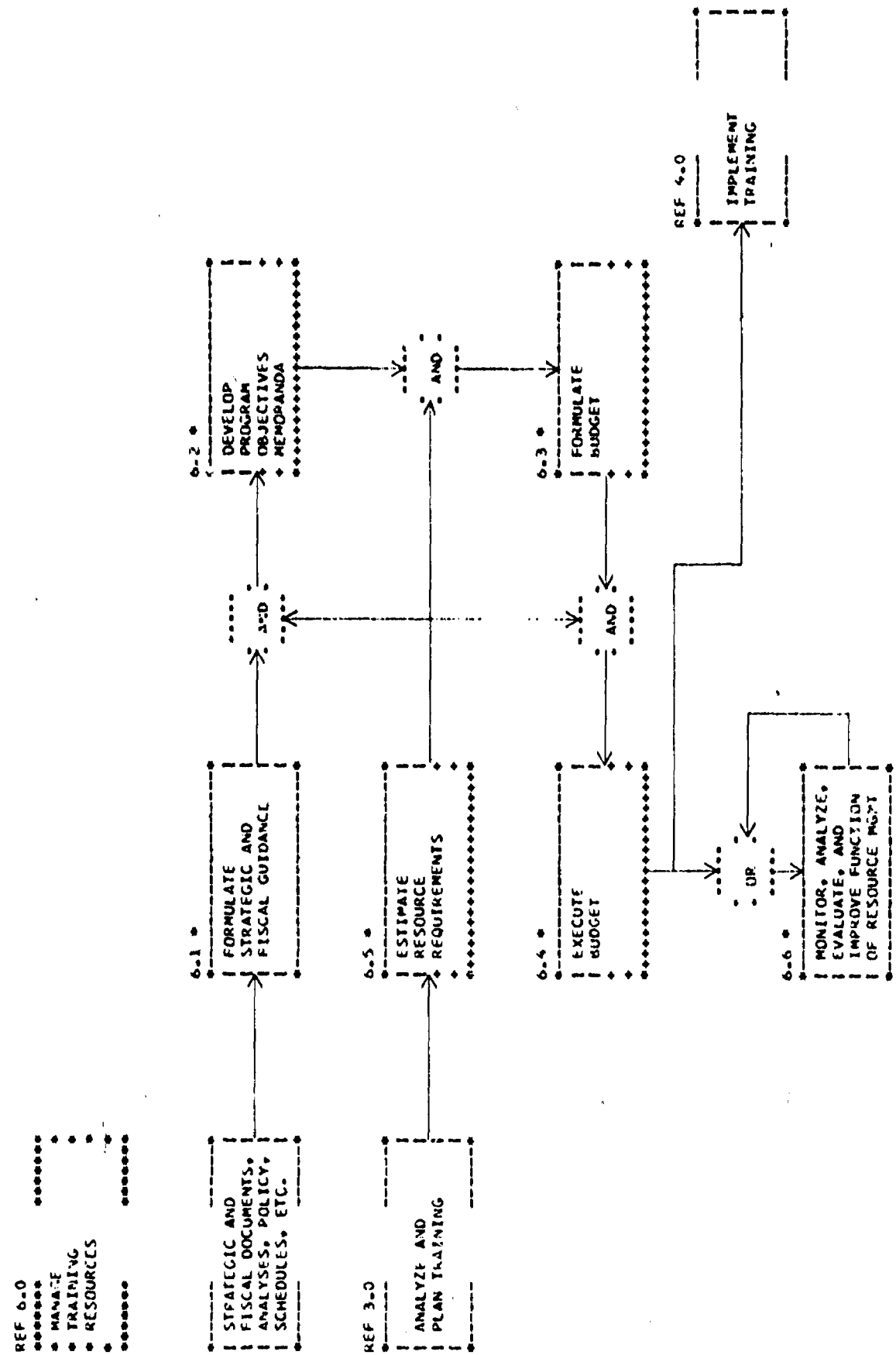

FIGURE VI 6.0-MANAGE TRAINING RESOURCES

c. Functional Description of NETS - Function 6.0 Manage Training Resources

A general description of this function was presented in the outline and top-level flow of the preceding section. Further detail is shown in this section through a series of flows which expand key subfunctions. In addition to notes within the flows that elaborate on significant points, a general discussion of the flow is contained on the facing page.

6.1 Formulate Strategic and Fiscal Guidance

The Navy planning system constitutes the basis for the annual strategic and fiscal guidance. The planning system is designed to integrate with the Joint Program for Planning of the Joint Chiefs of Staff (JCS), the DOD Planning System, and the Congressional budget cycle.

A number of documents are developed as a part of the planning system. Their relevance to training appears rather indirect, however, even conceptual definitions of new weapons systems, descriptions of changing missions, and predictions within the personnel area can provide valuable insight into the strategic direction that training should take. At the JCS level, the more significant planning documents are:

1) Joint Long-Range Strategic Study (JLRSS). This provides the views of the JCS on future U.S. military power and serves as the basis for studies, policies, plans, and R&D direction for the period ten to twenty years out.

2) Joint Strategic Objectives Plan (JSOP). This serves as the primary document for guiding the development of the Department of Defense (DOD) budget. It provides planning guidance to major commands for the mid-range period (two to eight years) and becomes the basis for military recommendations, force level actions, and related issues.

3) Joint Research and Development Objectives Document (JRDOD). This provides R&D guidance to the Secretary of Defense (SECDEF) and is based upon the JLRSS and JSOP.

None of the above documents was specifically reviewed as a part of this study. The major references from which information was obtained were:

1) SECNAV (Secretary of Navy) Instruction 5000.16D - Policy, Roles, and Responsibilities within the Department of the Navy for Implementation of the DOD Planning, Programming and Budgeting System (PPBS).

2) NAVSO P-1000 - Volume 7; Navy Comptroller Manual, Budgeting

3) Department of the Navy Programming Manual

4) NAVSO P-2457 - Department of the Navy, RDT&E Management Guide.

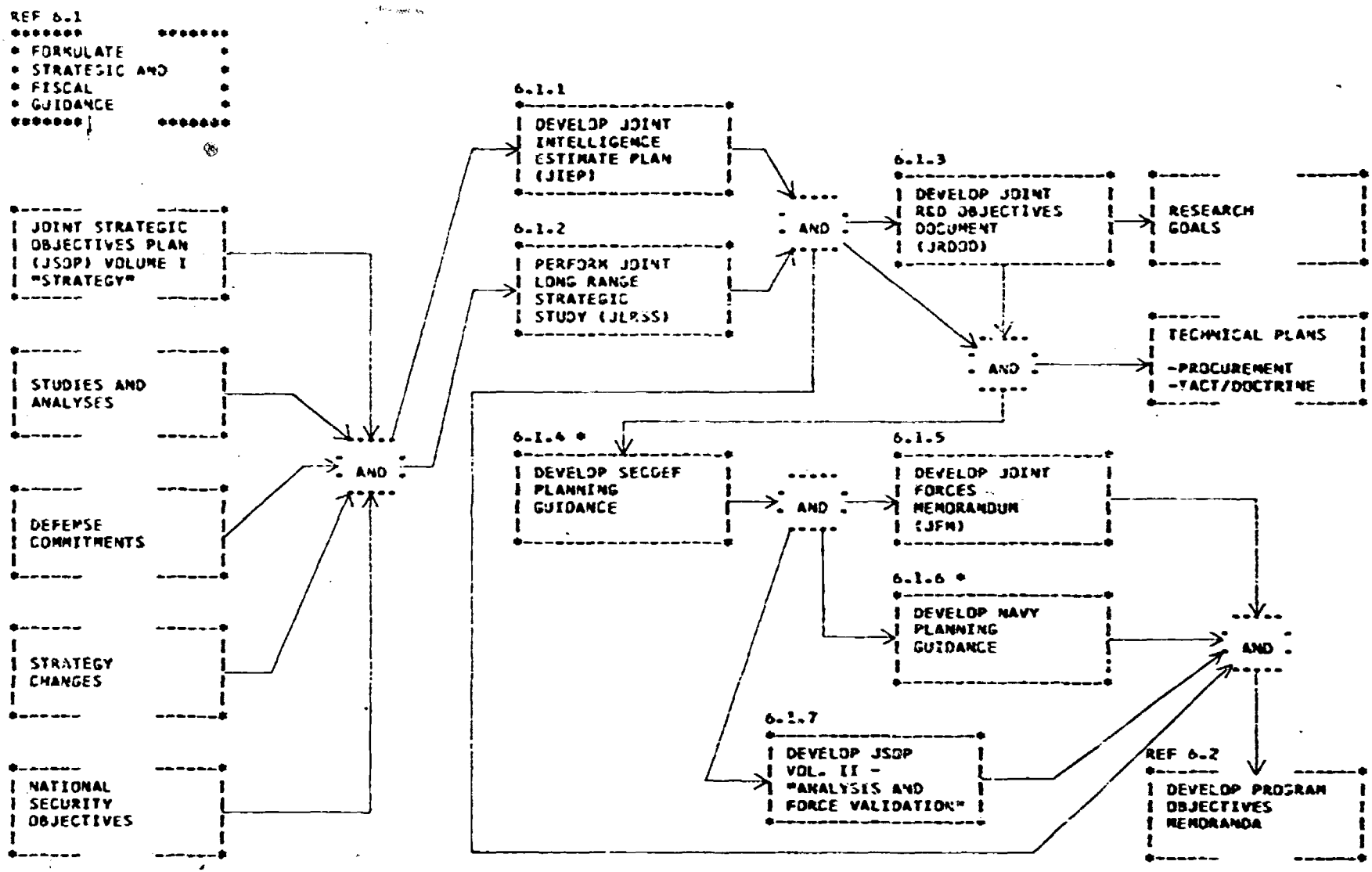

FIGURE VI 6.1-FORMULATE STRATEGIC AND FISCAL GUIDANCE

6.1.4 Develop SECDEF Planning Guidance

The JCS strategic documents and the Five Year Defense Plan (FYDP) form a baseline for the development of basic SECDEF guidance documents. The Defense Policy and Planning Guidance which is reviewed throughout DOD serves as input to the JSOP Vol. II - "Analysis and Force Validation." The Planning - Programming Guidance Memorandum identifies force levels, fiscal levels, other assumptions, and Program Objectives Memoranda preparation guidance.

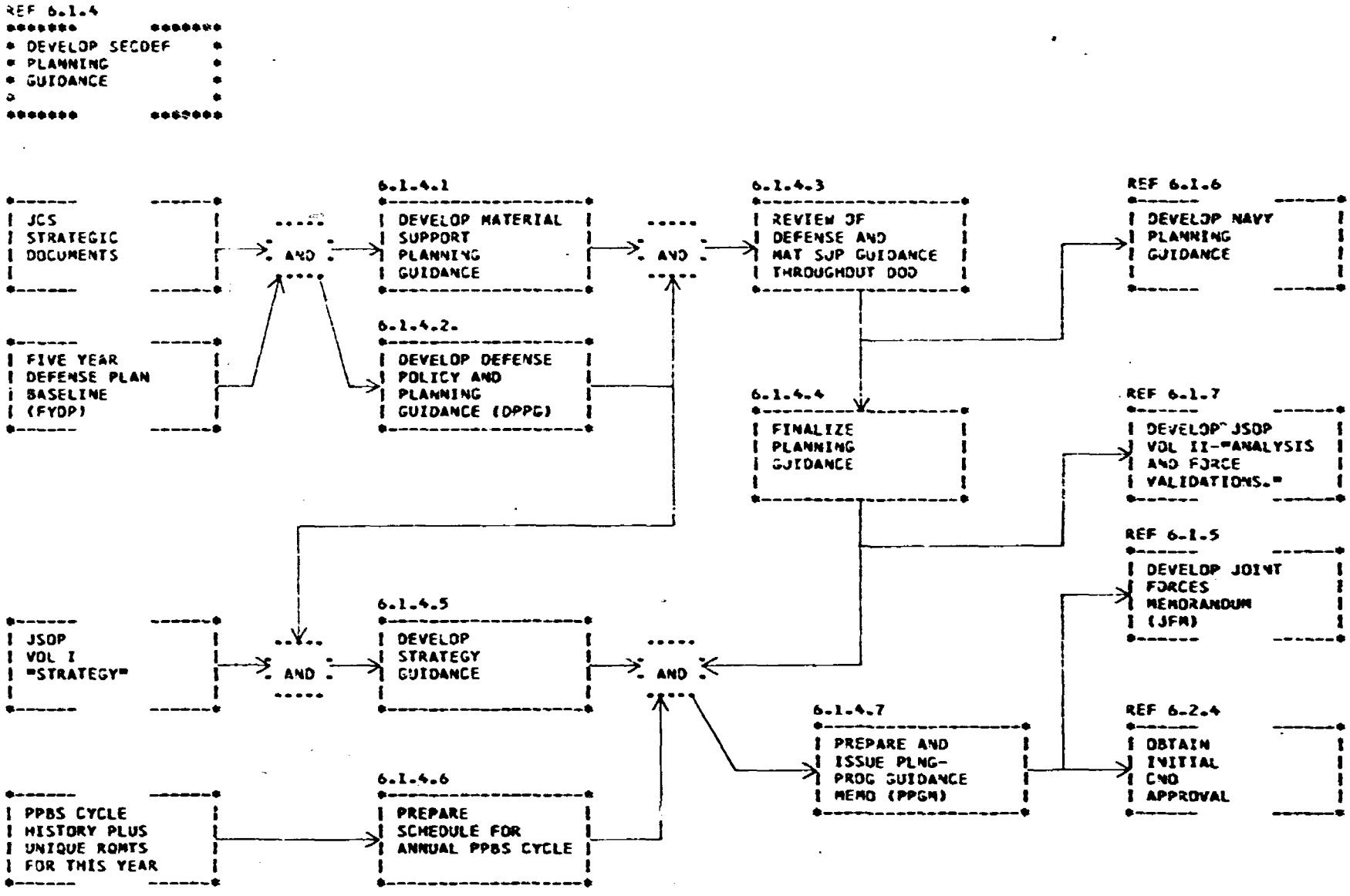

FIGURE VI 6.1.4-DEVELOP SECDEF PLANNING GUIDANCE

6.1.6 Develop Navy Planning Guidance

Specific guidance for the Planning-Programming-Budgeting cycle is developed at the CNO level based upon the Navy's planning base. The Navy Strategic Study (NSS) provides long-range and mid-range guidance on the Navy's participation in national defense. The NSS is issued annually to cover the period five to twenty years in the future. The CNO Policy and Planning Guidance (CPPG) is based upon the NSS and is organized into four sections:

1) The essence of SECDEF's policy and planning guidance as it pertains to the Navy

2) CNO's views on strategic objectives

3) Specific CNO objectives

4) Broad guidance for POM development including guidance for the CNO Program Analysis Memoranda (CPAM).

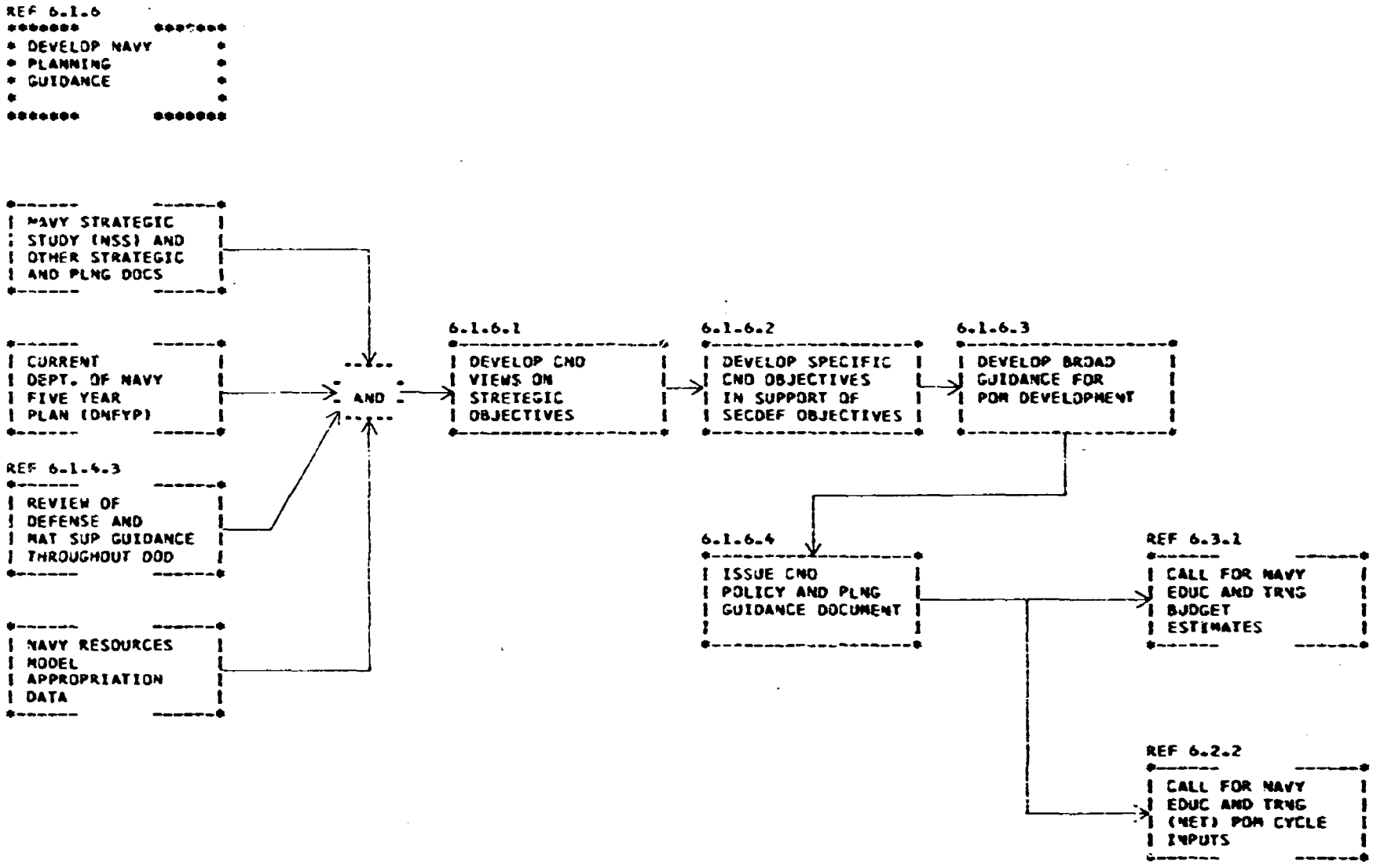

FIGURE VI 6.1.6-DEVELOP NAVY PLANNING GUIDANCE

6.2 Develop Program Objectives Memoranda

The Program Objectives Memoranda is the major document identifying how the JSOP objectives will be accomplished within the fiscal constraints specified by the Fiscal Guidance Memorandum. For this reason the prioritization of requirements and the accurate estimation of program costs are extremely important to sound POM development. The POM defines resource levels for five years starting two years after the current fiscal year. Failure to identify requirements within the period covered by the POM was observed to cause substantial funding difficulties during the budget years.

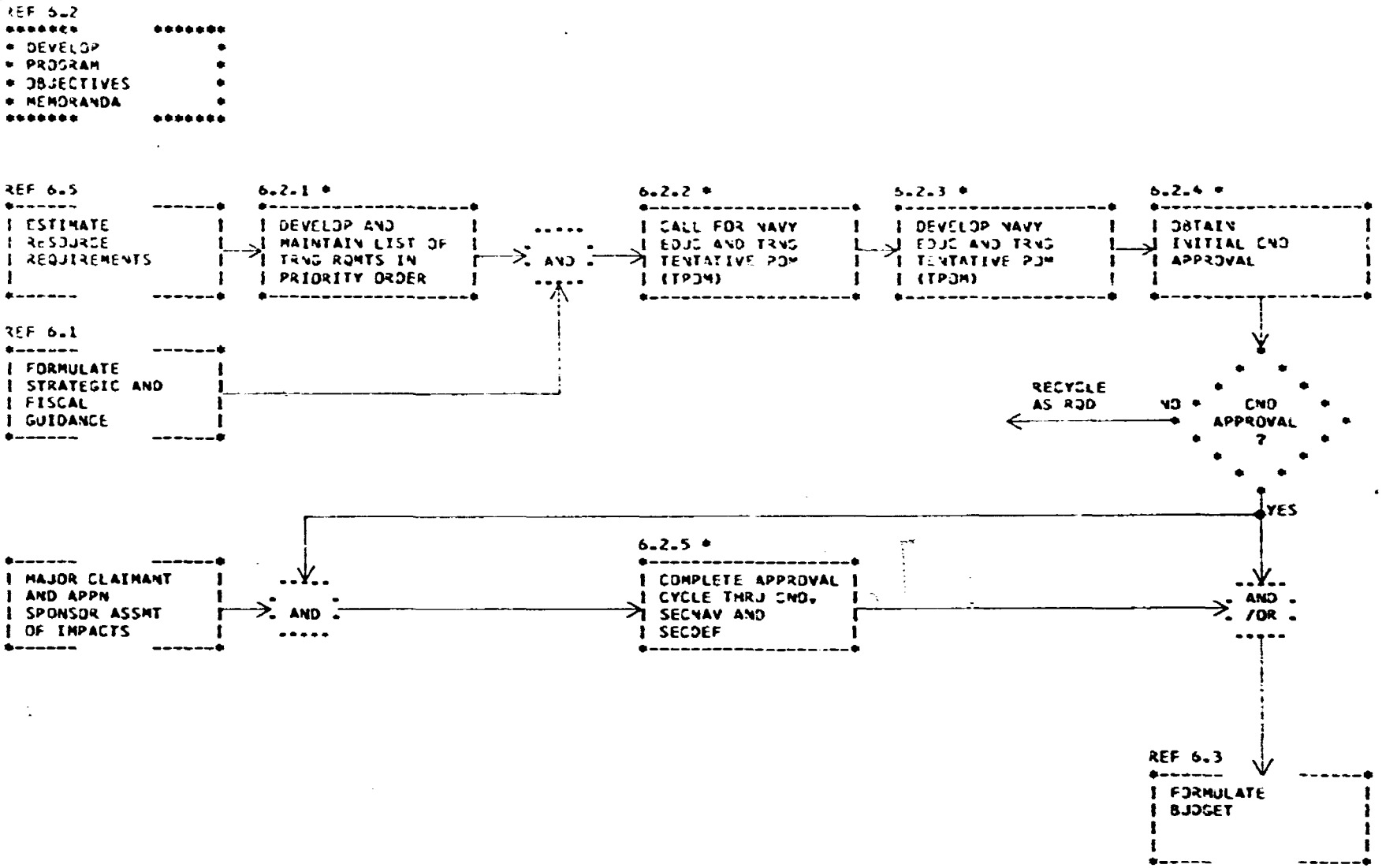

FIGURE VI 6.2-DEVELOP PROGRAM OBJECTIVES MEMORANDA

6.2.1 Develop and Maintain List of Training Requirements in Priority Order

The ability to place projects/programs in appropriate priority order was identified as a key problem area and one that needed to be resolved for achieving the desired effectiveness in the idealized training system. This flow presents a preliminary procedural approach devised within CNET to insure:

1) Early identification of POM candidates

2) Effective prioritization of programs/projects requiring resources.

It also relates to program/projects identified within the budget years. The training priorities board and the "add-on" list are key improvements in the prioritization process.

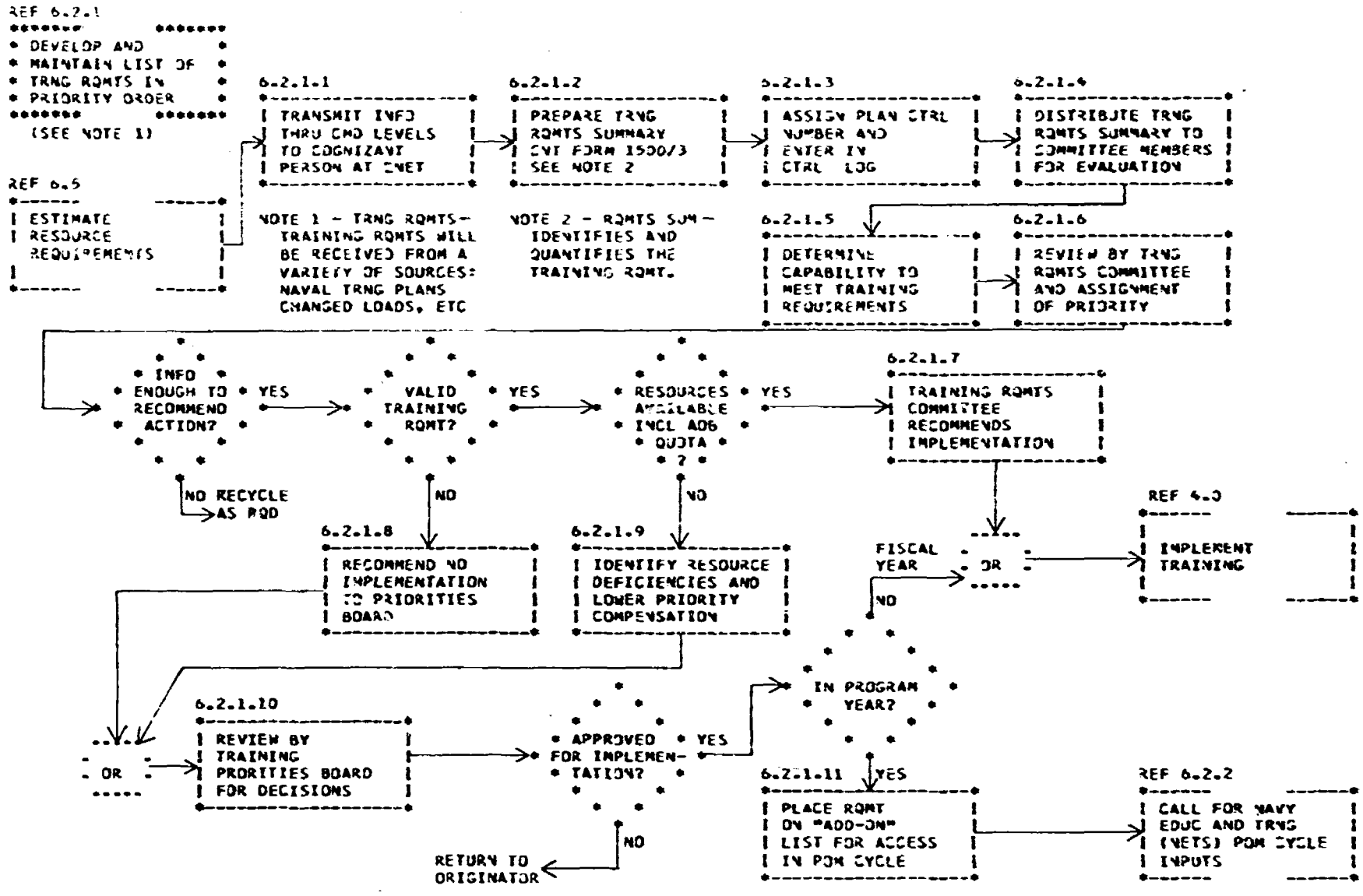

FIGURE VI 6.2.1-DEVELOP AND MAINTAIN LIST OF TRNG RQMTS IN PRIORITY ORDER

6.2.2 Call for Navy Education and Training TPOM

General Navy POM planning guidance is retranslated at various command levels to provide the necessary strategic and fiscal direction for compiling the POM. Aggregation and prioritization takes place at each echelon. DNET as the Major Mission Sponsor for training maintains responsibility for the final CNO level of aggregation.

CNET as the principal Major Claimant provides the majority of training planning input within Major Program VIII - Training, Medical and other General Personnel Activities. Other major claimants also input training requirements to DNET; for example, the Fleets for training within the Naval Air Readiness Squadron (RAGS) and BUMED for the Hospital Corpsman Schools.

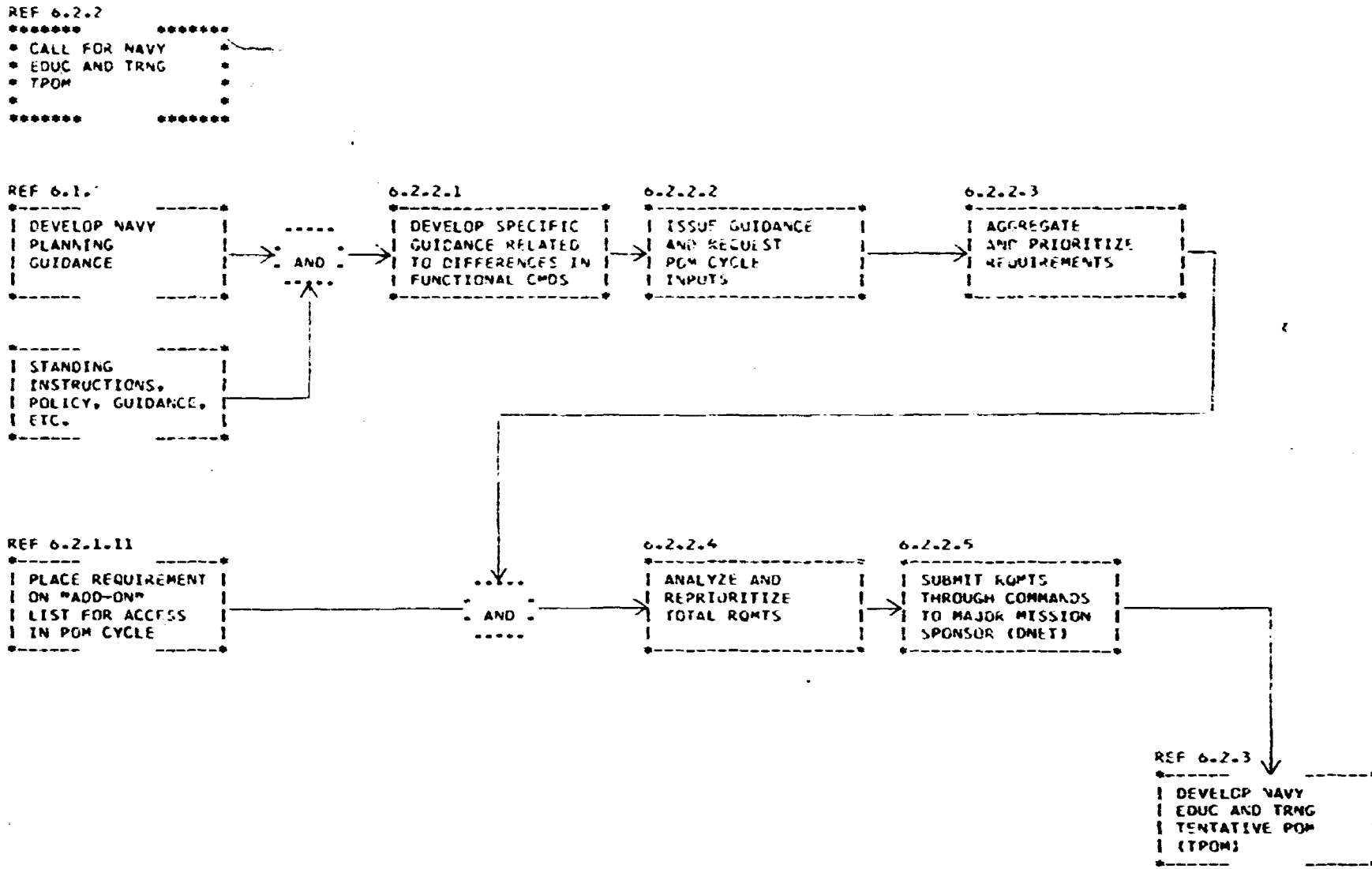

FIGURE VI 6.2.2-CALL FOR NAVY EDUC AND TRNG TPOM

6.2.3 Develop Navy Education and Training Tentative POM (TPOM)

The fiscally constrained TPOM is developed by DNET along with an addendum representing the training programs/projects which cannot be accomplished within the defined resources. This flow shows the TPOM data being input to the Navy Resources Model (NARM), however, it is understood that training costing is done outside of the model. Therefore, the marginal costing techniques used to analyze other Major Program areas are not available for most of the training related items. In an idealized training system, this modeling technique should be extended into the training domain.

CNO Program Analysis Memoranda (CPAM's) are developed for each Major Program. They provide more specific guidance for POM development. The individual CPAM's represent the approach, alternatives, issues, etc., with respect to each program which have resulted from the fiscal constraints imposed by the CPPG. For training related CPAM's, DNET is responsible to assess the impact and prepare impact statements which address the constraints and alternatives posed in the CPAM. Impact statement analysis by the CNO Working Group and the CNO Steering Committee develops the basis for the initial CNO approval cycle.

6.2.4 Obtain Initial CNO Approval

The CPAM's with identified impacts are reviewed by the CNO Executive Board (CEB) to determine the extent to which particular alternatives impact the CNO's objectives. The output of this review cycle is a set of CPAM's on which tentative decisions have been made and which have been summarized and put in priority order so that CNO can respond to the SECDEF developed fiscal guidance.

DNET develops impact statements on the summarized training CPAM in preparation for the final CNO POM approval cycle. The CEB reviews and recommends the final position on the CPAM.

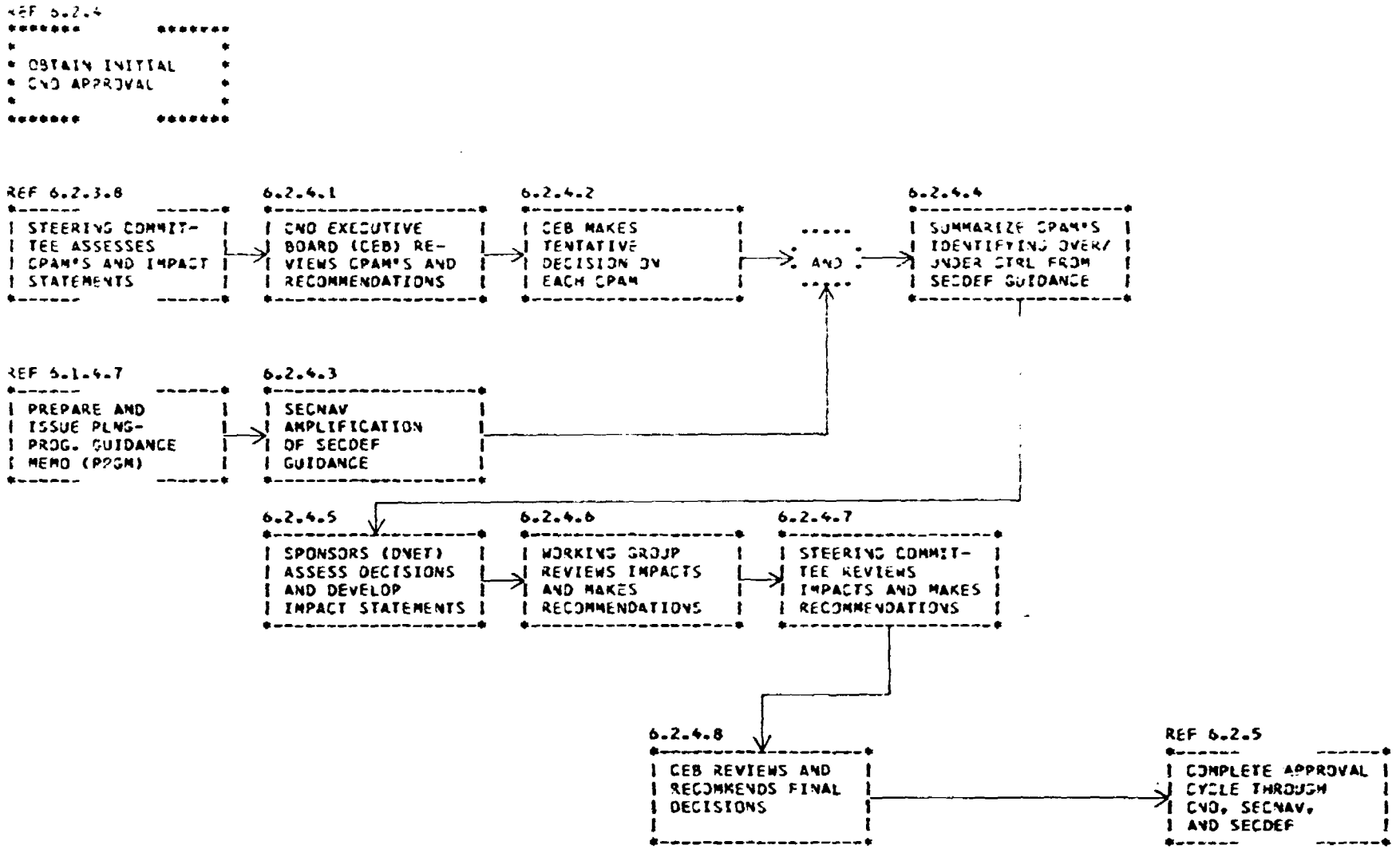

FIGURE VI 6.2.4-OBTAIN INITIAL CNO APPROVAL

6.2.5 Complete Approval Cycle Through CNO, SECNAV, and SECDEF

The final assessment of impacts and CNO decisions on the POM provide the basis for the Budget Call issued through the various Appropriation Sponsors. The POM, meanwhile, continues through its review and approval cycle. The CNO approved POM is reviewed and approved by SECNAV. The SECNAV approved POM with a prioritized over-controls addendum is submitted to the Office of the Secretary of Defense (OSD). Issue papers are developed within each Major Program category and submitted to CNO and SECNAV (as well as to appropriate sponsors) for review and comment. The issue papers returned to OSD become the basis for the issuance of Program Decision Memoranda (PDM's). PDM's are assessed for impact by DNET (in conjunction with other concerned sponsors) and the results of this assessment provide input to NAVCOMPT's eventual markup of the budget.

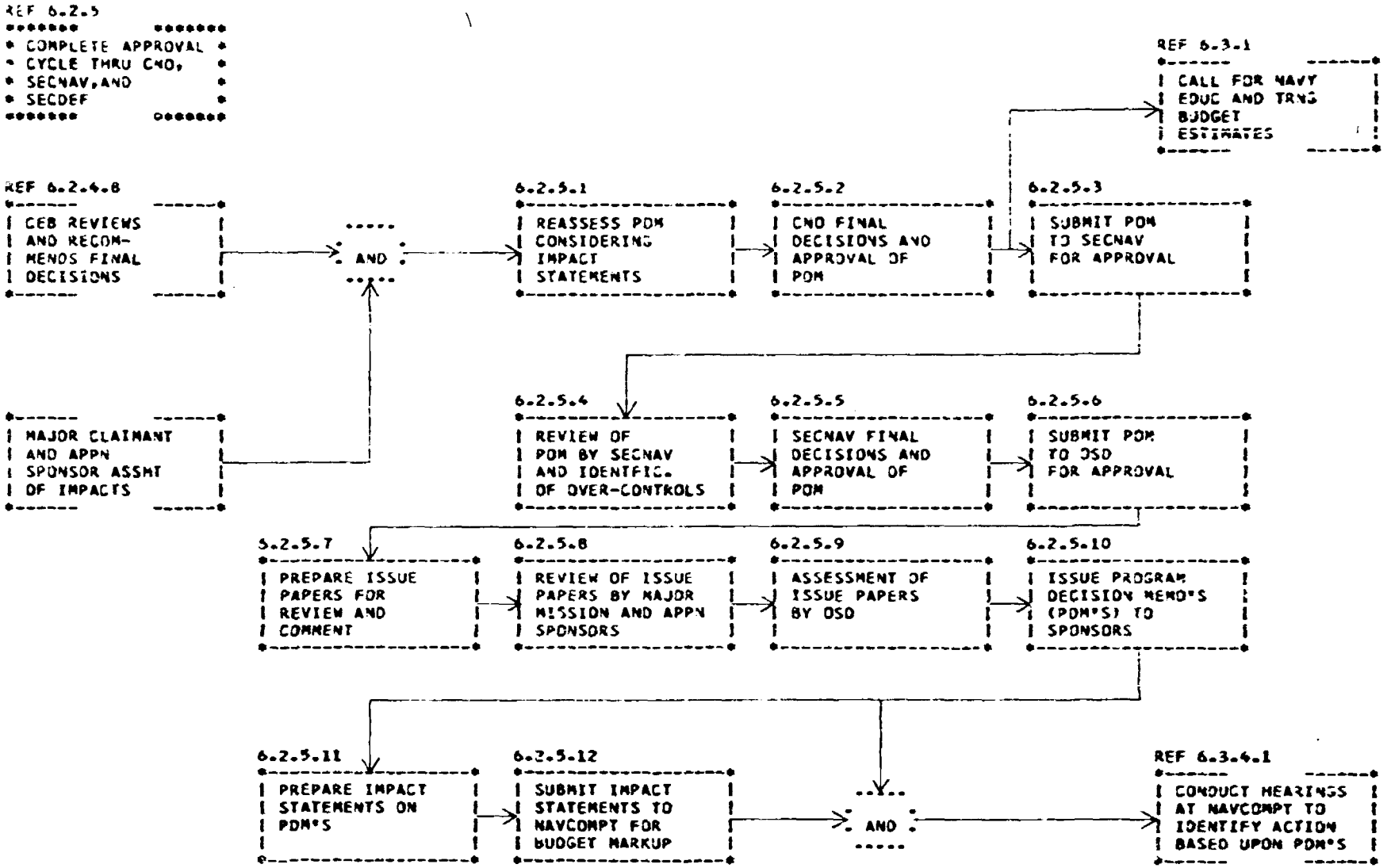

FIGURE VI 6.2.5-COMPLETE APPROVAL CYCLE THRU CNO,SECNAV, AND SECDEF

6.3 Formulate Budget

The Navy Comptroller Manual, Volume 7, Budgeting, defines this phase of the Resource Management function in the following way.

> "Formulation" is the term used to identify that part of the budget cycle which includes all the actions performed in the development of estimates, and the review of estimates by command and technical echelons, including the adjustments based on decisions made at review level and culminating in congressional action. The formulation process includes the issuance of program and technical guidance; the estimating of resource requirements to meet the program objectives; the preparation of budget documents and supporting data in the format required by review echelons; the hearings, analyses, and recommendations developed at each level; and the enactment of the various Department of the Navy appropriations in the Department of Defense Appropriation Acts.

The budget call appears to be an interim refinement of the POM interposed between the POM and the actual apportionment phase of the budget cycle. There were several indications that this was a redundant and unnecessary step in the overall process -- that with some additional refinement of POM input beyond the program element level, that Program Budget Decisions (PBD's) will be effectively rendered. This would cause the resource planning cycle to proceed from the POM to apportionment without the interim formal cycle. However, this effort should be replaced with increased review, analysis, and prioritization of programs inputted via the POM.

The entire programming-budgeting process should be subjected to additional study and analysis for possible streamlining.

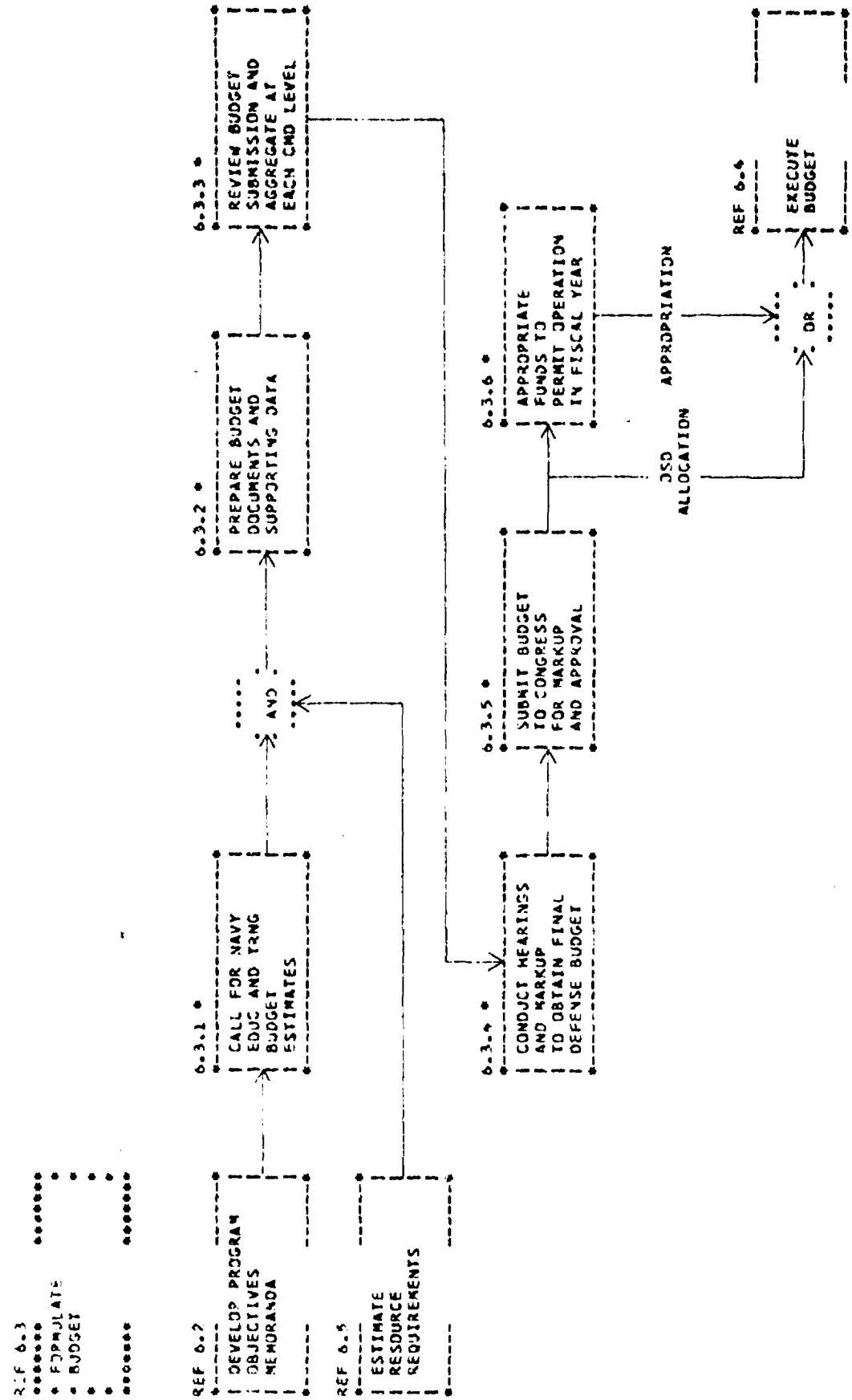

FIGURE VI 6.3-FORMULATE BUDGET

6.3.1 Call for Navy Education and Training Budget Estimates

Preparation for the budget estimate consists of revising previous planning guidance, identifying the specific controls resulting from POM cycle decisions made by this point in time, outlining the format for inputting budget information, and issuing the necessary instructions with schedules for retranslation at various command levels.

Some procedural differences were noted where two major claimants had resource management responsibilities within a training functional command. This was also the case with POM cycle instructions.

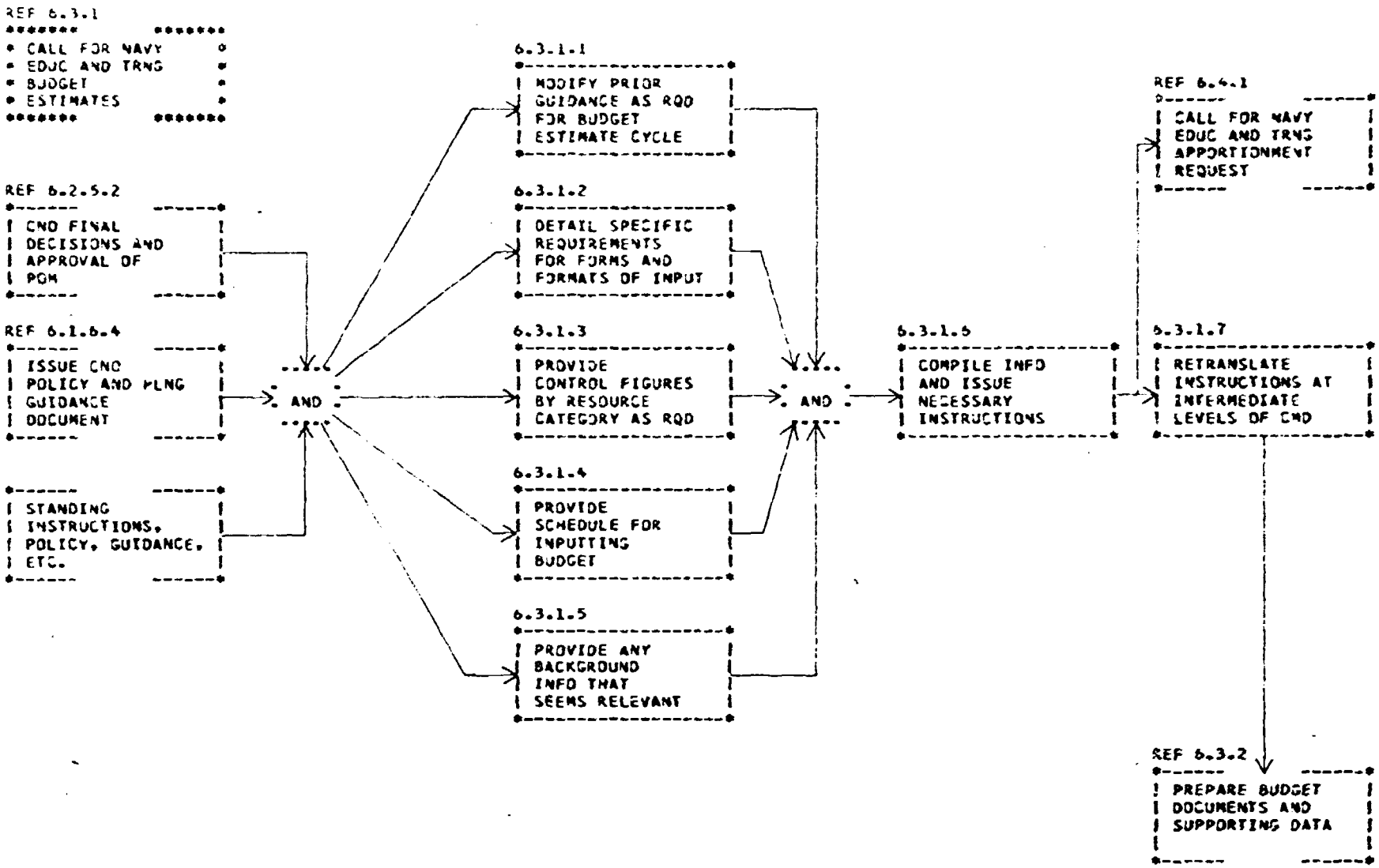

FIGURE VI 6.3.1-CALL FOR NAVY EDUC AND TRNG BUDGET ESTIMATES

6.3.2 Prepare Budget Documents and Supporting Data

Each of the budgets relative to a specific appropriation is prepared under a different set of instructions. The major budgets which relate to training appear to be Operation and Maintenance, Navy (O&MN); Other Procurement, Navy (OPN); Research Development, Test and Evaluation, Navy (RDT&E); and Military Construction (MILCON).

The budget process was observed for purposes of this study only in the O&MN and OPN areas. Some of the general implications of RDT&E budgeting are brought out in the subflows for Function 7.0 Perform Training Research.

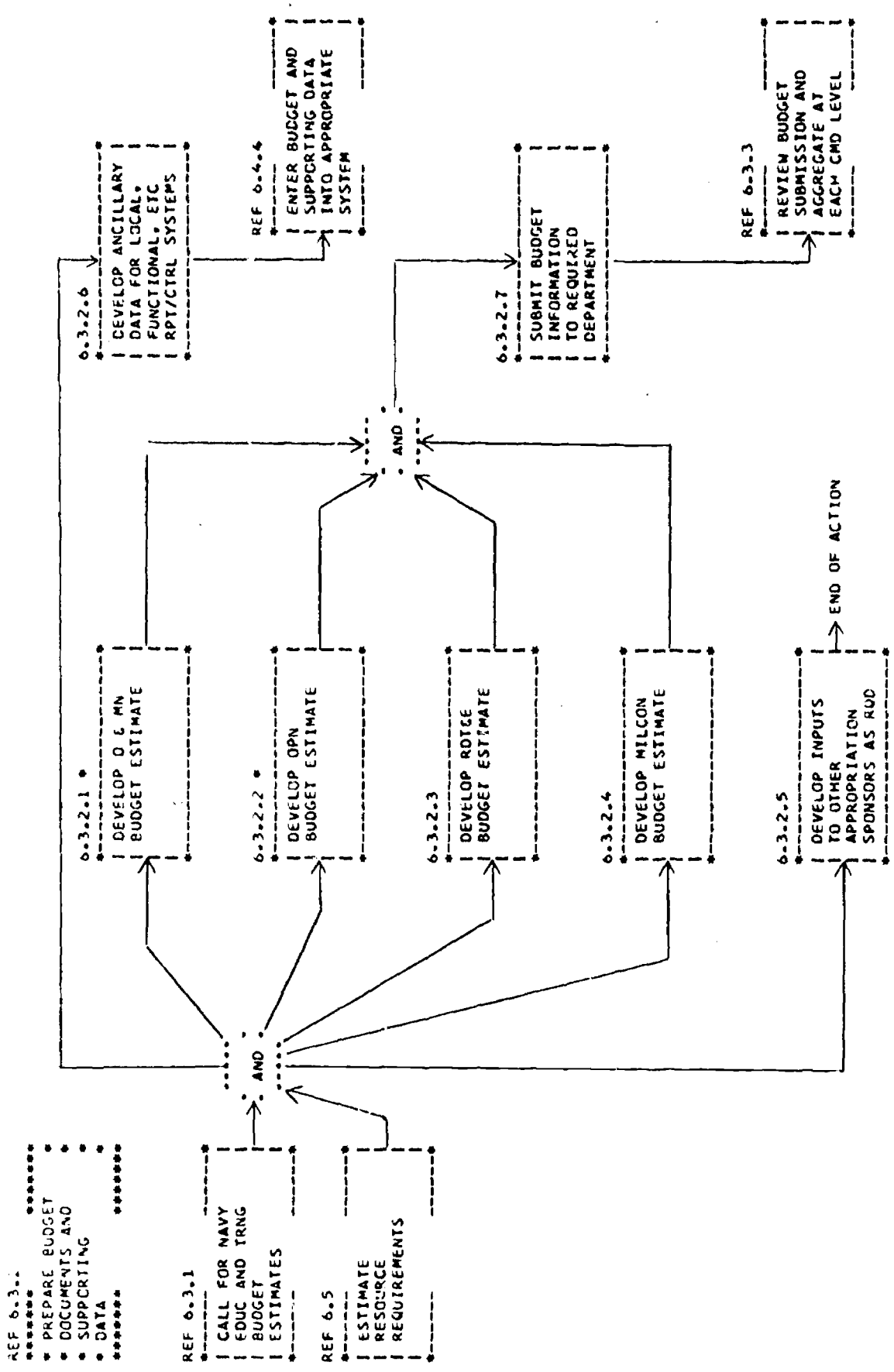

FIGURE VI 6.3.2-PREPARE BUDGET DOCUMENTS AND SUPPORTING DATA

6.3.2.1 Develop O&MN Budget Estimate

The major components of the O&MN budget estimate are shown in this subflow. The function of estimating resource requirements is a major input into the development of this appropriation budget category.

Two of the more significant problems noted in this area were:

1) Civilian manpower planning and funding -
A number of locations identified the fact that insufficient funds had been defined in the CIVSUB program to support talent equivalent to the military personnel being replaced. On average, the funding level appeared to be about 50 percent of what was believed to be required.

2) Developing unfunded requirements -
The key to effective identification of unfunded requirements through higher command levels is in the ability to assign appropriate priorities. One problem noted was the difficulty in translating lower command level priority systems (generally, by project, program, or expense category) into what was required in more aggregate form. In an idealized situation, the ability to summarize priority categories of unfunded requirements simply would help insure their identification at higher command levels.

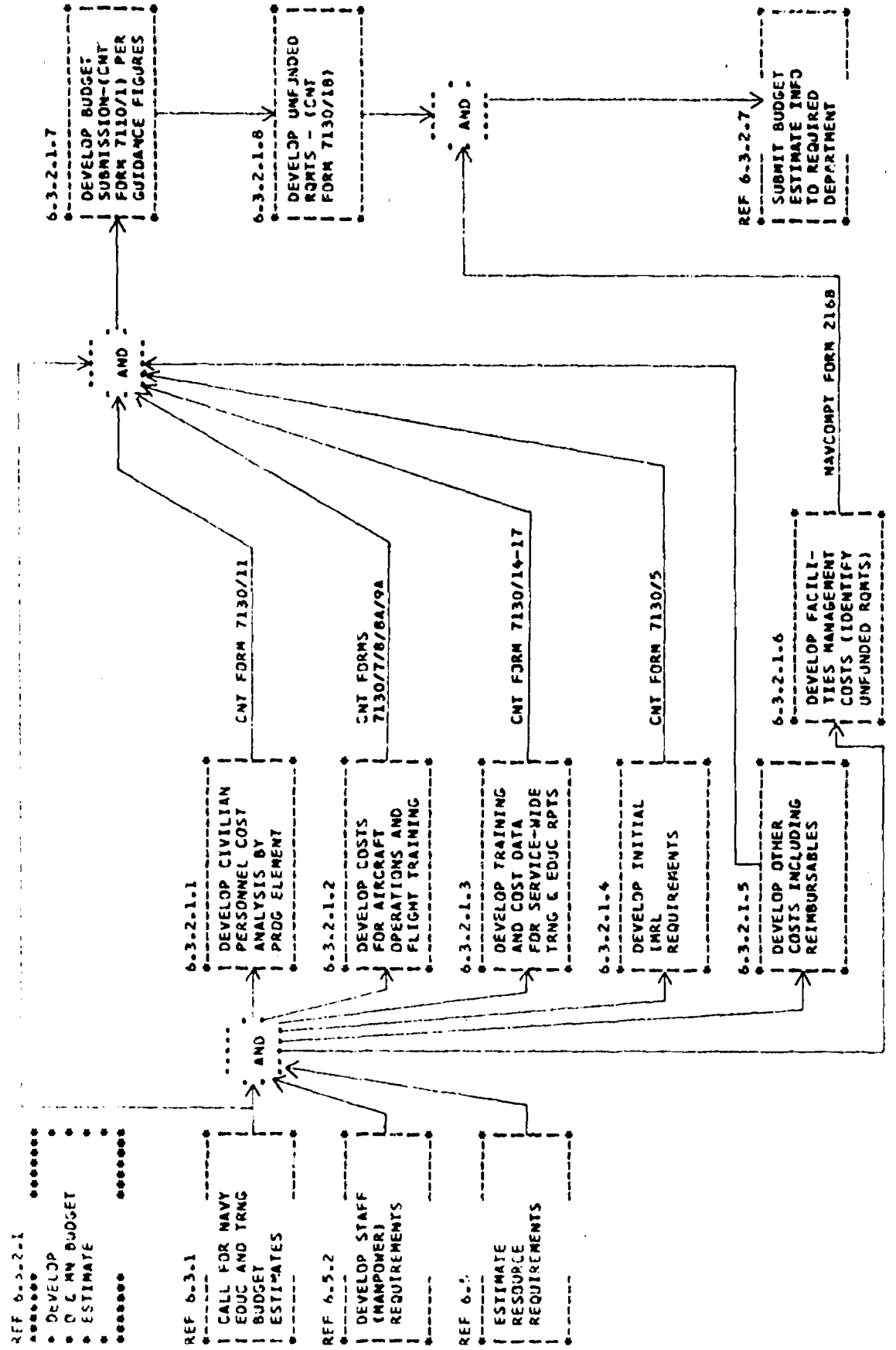

FIGURE VI 6.3.2.1-DEVELOP O & MN BUDGET ESTIMATE

6.3.2.2 Develop OPN Budget Estimate

The Other Procurement, Navy (OPN) budget concerns training and logistic support equipment with a unit cost of $1,000 or more, ADP equipment, Industrial Plant Equipment, film production, initial spare parts, modifications, and certain types of emergency requirements. Special budgetary justifications are required of requests for equipment/devices with a unit cost of over $500,000. This procedure in effect forces an economic analysis of the investment decision and its alternatives so that comparative evaluations can be made.

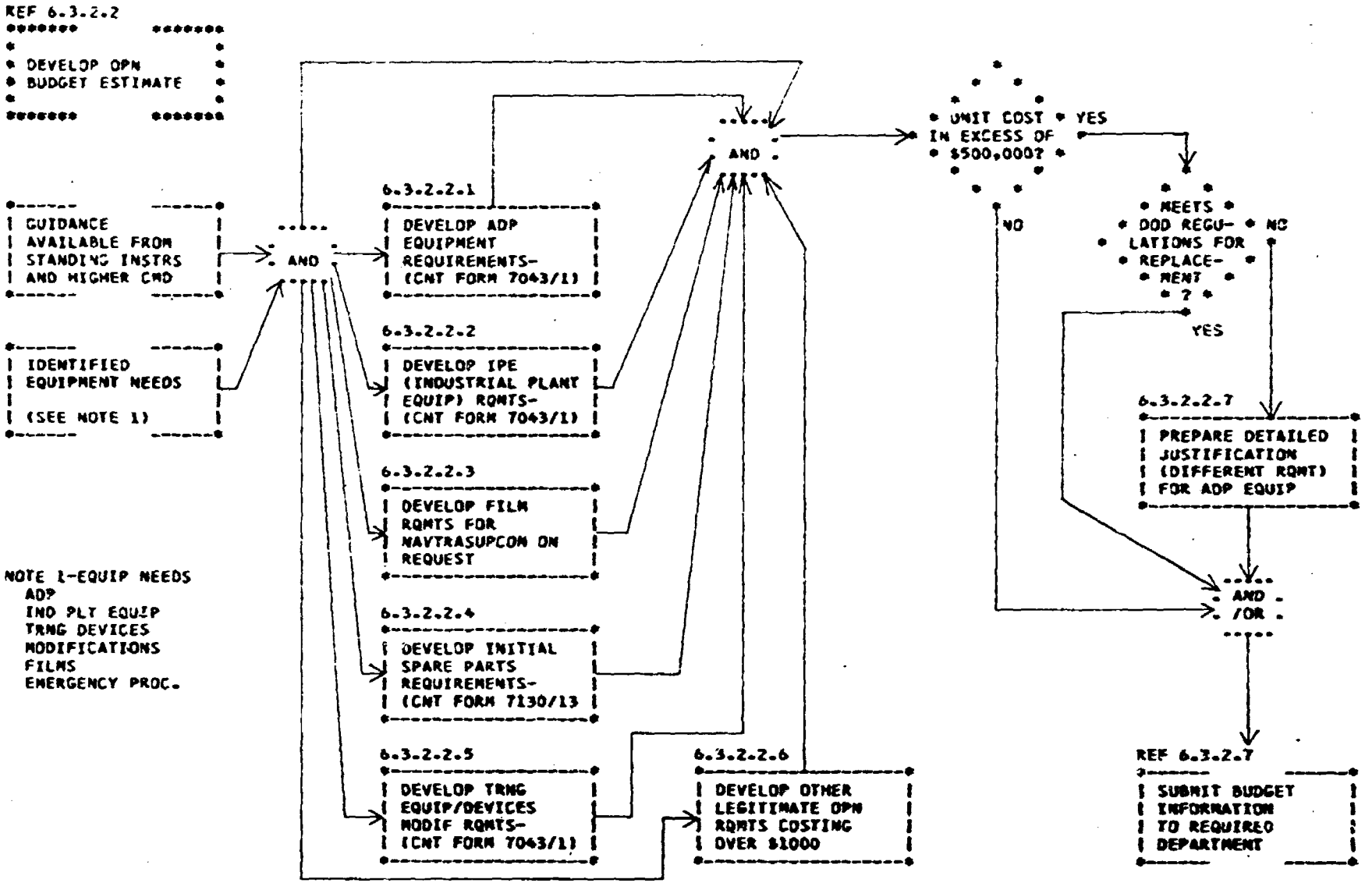

FIGURE VI 6.3.2.2-DEVELOP OPN BUDGET ESTIMATE

6.3.3 Review Budget Submission and Aggregate at Each Command Level

The budget review procedures include tests for accuracy, reasonableness, and adequacy of justification. The negotiation of a final viable plan and a reasonable prioritized listing of unfunded requirements was observed to involve substantial negotiations between the budget originator and higher level command staff personnel. The majority of negotiating appeared to be worked out by phone. The difficulties involved in translating priorities for unfunded requirements through upper level commands was pointed out on 6.3.2.1.

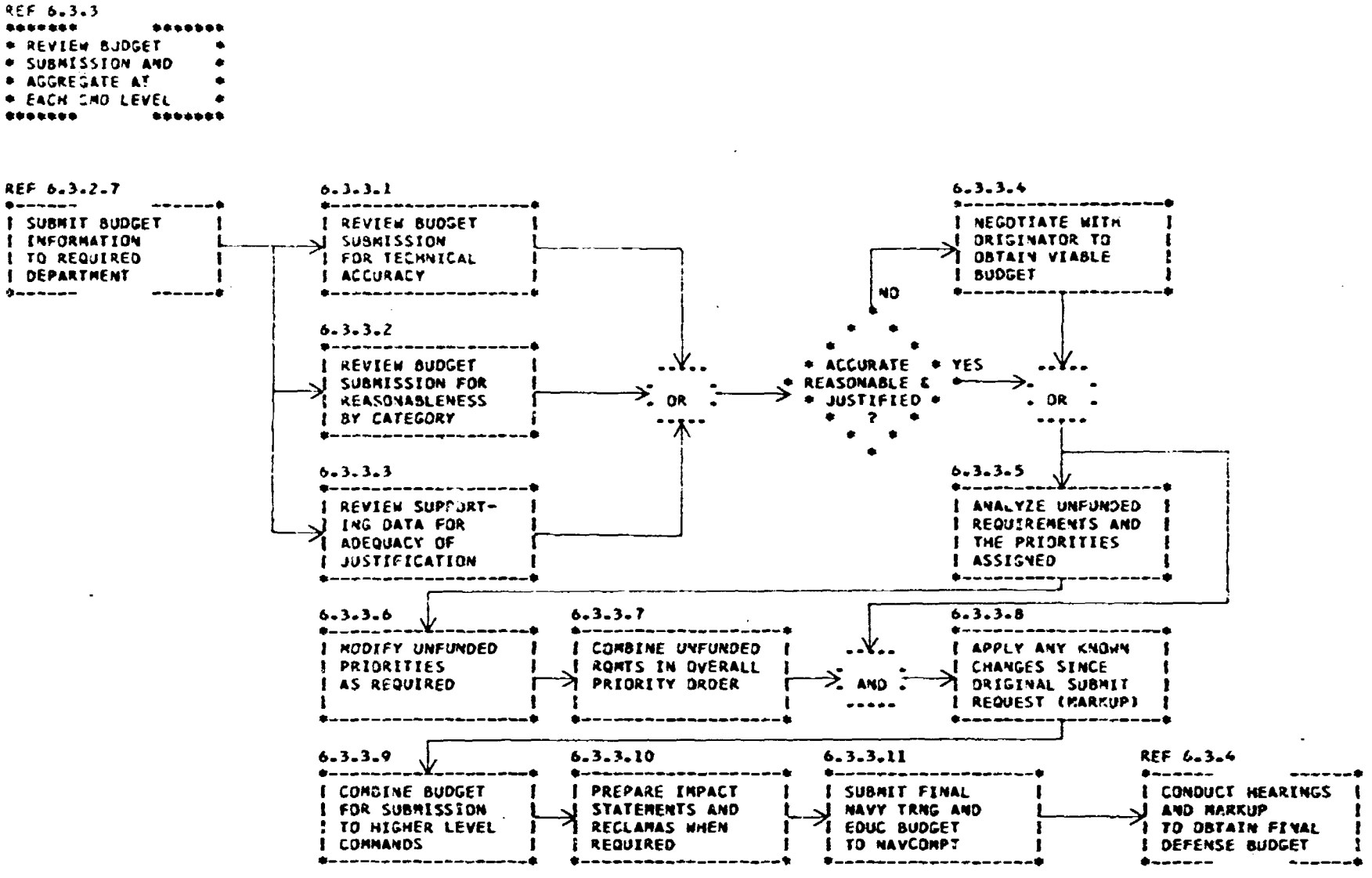

FIGURE VI 6.3.3-REVIEW BUDGET SUBMISSION AND AGGREGATE AT EACH CMD LEVEL

6.3.4 Conduct Hearings and Markup to Obtain Final Defense Budget

Prior to SECNAV approval, hearings conducted at the NAVCOMPT level attempt to apply the results of POM PDM's to the budget estimate in order to develop a viable Navy budget for submission to OSD. Training items not receiving favorable treatment are referred to DNET or CNET (or other major claimants as appropriate) for possible reclama action. The final decisions and budget markups are made prior to submission to SECNAV for approval.

A similar activity takes place within OSD with Program Budget Decisions (PBD's) being issued and transmitted to sponsors and/or major claimants for impact assessment. Final decisions and corresponding markups lead to the finalized education and training budgets within appropriation, however, it was indicated that the O&MN, OPN, RDT&E, and MILCON budget review and analysis was handled at the same time. It was also possible to split them if desired.

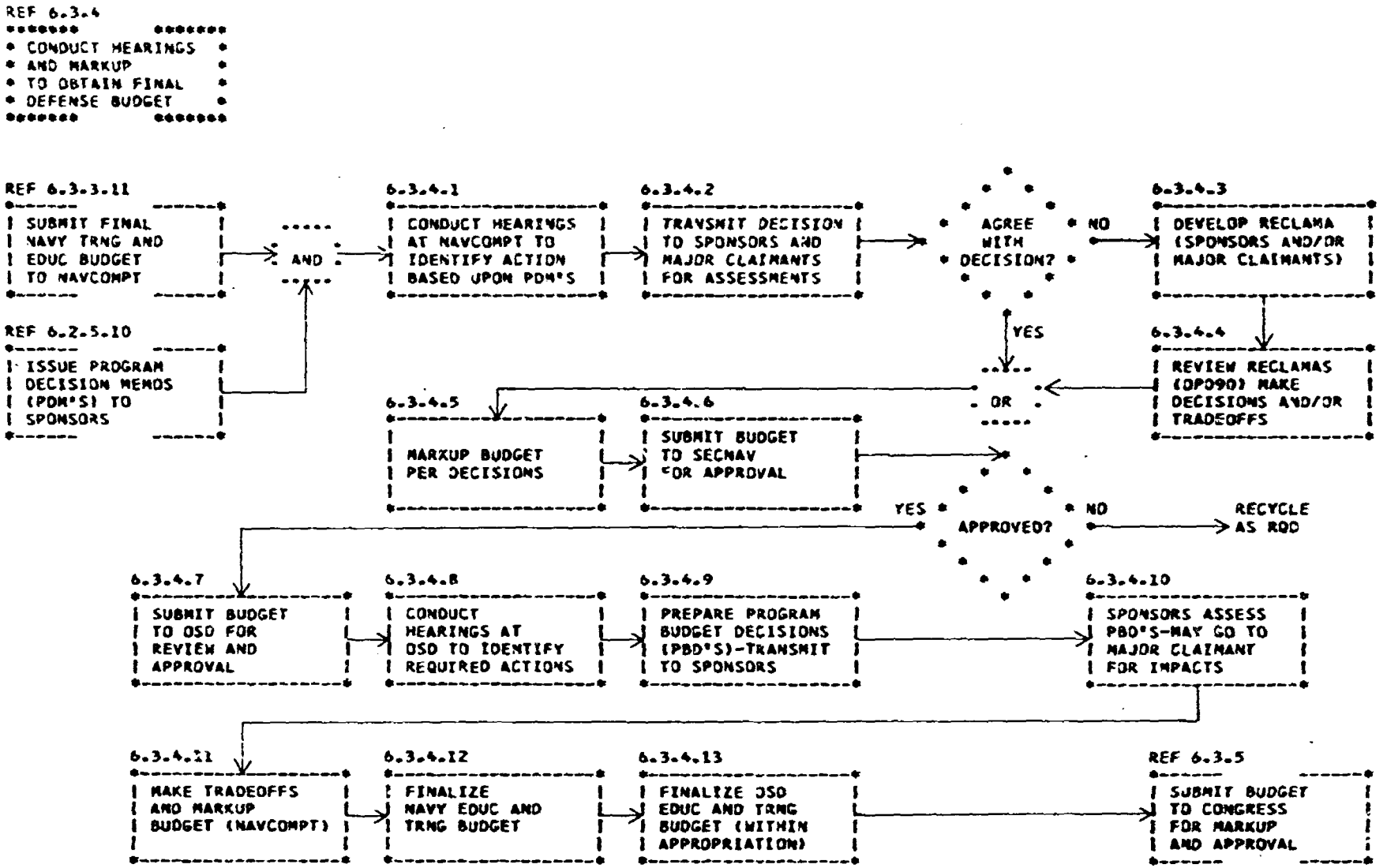

FIGURE VI 6.3.4-CONDUCT HEARINGS AND MARKUP TO OBTAIN FINAL DEFENSE BUDGET

6.3.5 Submit Budget to Congress for Markup and Approval

The education and training budgets are submitted by the President to Congress as a part of the annual budget estimates submission procedure. Detailed justification books containing the necessary supporting data are reviewed by the Armed Forces and Appropriations Committees of both the House and Senate. Witnesses, generally in the person of the appropriation sponsor or his financial representative, may be asked to appear and defend his portion of the budget.

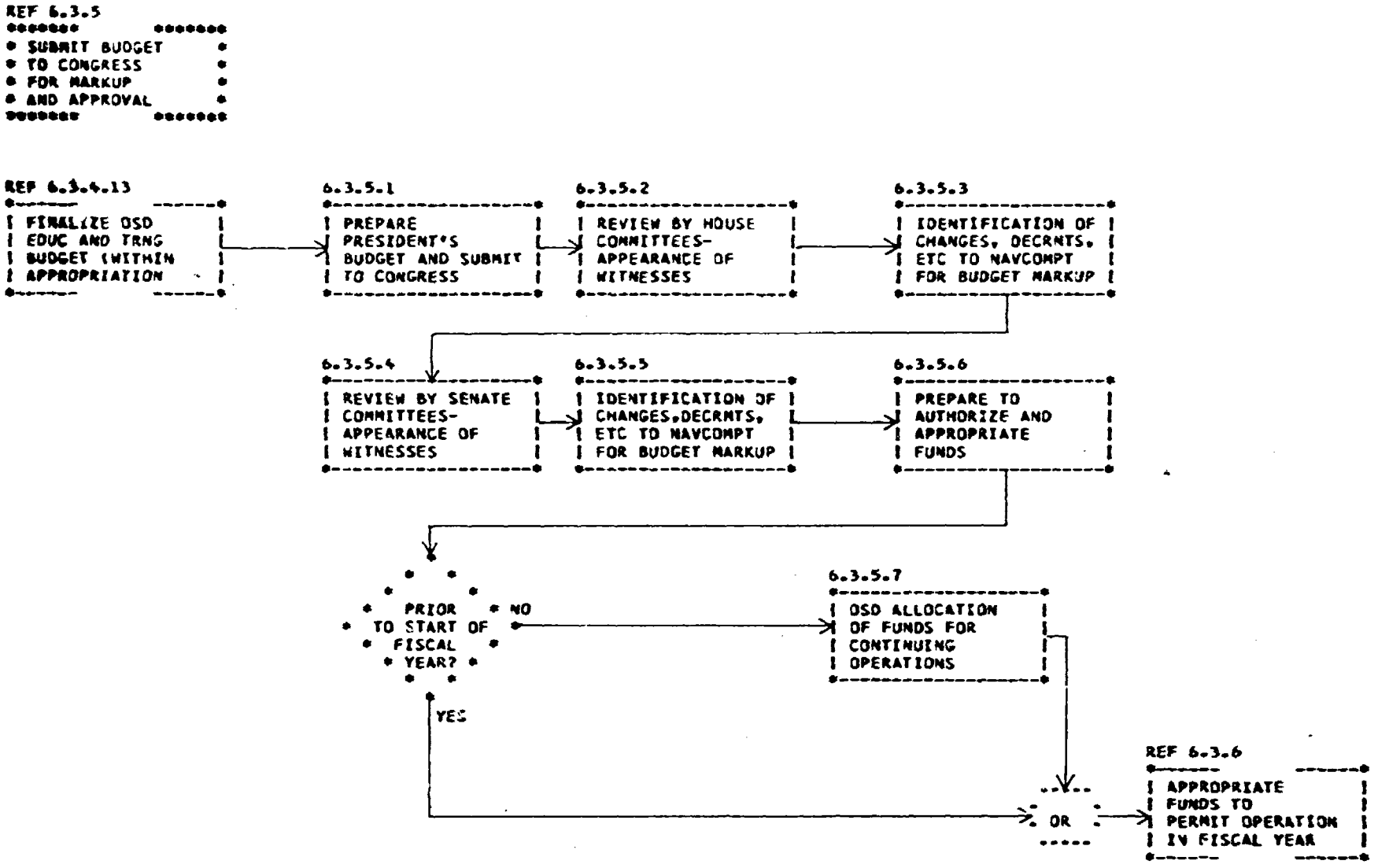

FIGURE VI 6.3.5-SUBMIT BUDGET TO CONGRESS FOR MARKUP AND APPROVAL

6.3.5 Appropriate Funds to Permit Operation in Fiscal Year

The major outcome of the budgeting procedure and hearings is the actual appropriation. Ideally the Appropriation Acts will be passed prior to the beginning of the fiscal year (July 1), however, this is rare. Therefore, authorizations to expend resources at the beginning of a fiscal year are generally done under a "continuing resolution" passed as an interim measure by Congress.

For certain procurement funds (PAMN and SCN) and for R&D funds, annual legislation is required to authorize appropriations. Separate legislation is also required to authorize funds for Military Construction.

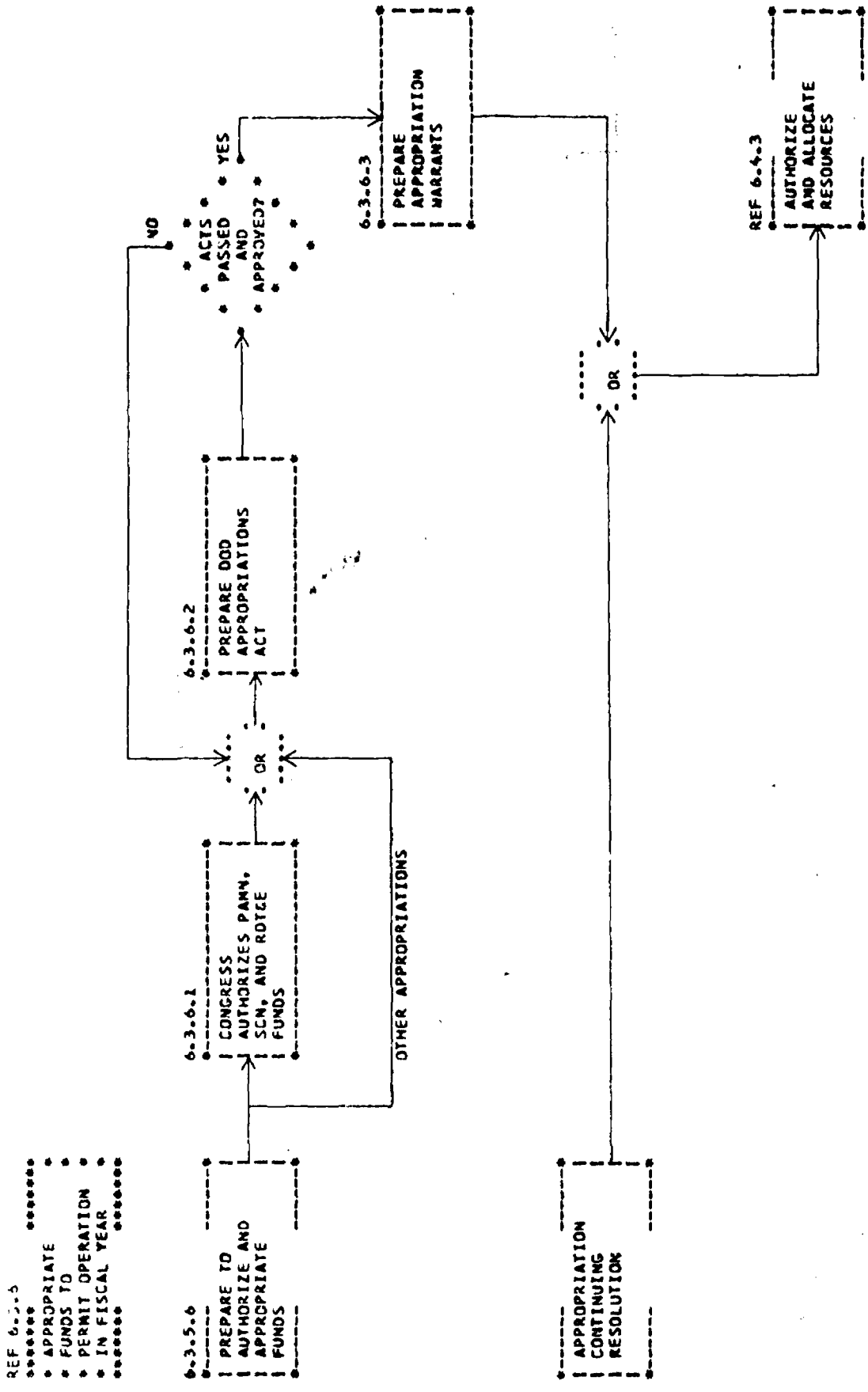

FIGURE VI 6.3.6-APPROPRIATE FUNDS TO PERMIT OPERATION IN FISCAL YEAR

6.4 *Execute Budget*

Budget execution is defined as:

> ...that phase of the budget cycle which encompasses all the actions required to accomplish effectively, efficiently, and economically the programs for which funds were requested and approval by competent authority. The budget execution phase overlaps the formulation and review phases in that updated financial plans based on current priorities must be completed in time for actions under those plans to begin on July 1 of the new fiscal year. The execution phase continues throughout the period of availability of the appropriation for obligation or expenditure. Effective budget execution requires procedures for control and evaluation which will ensure compliance with regulations and limitations established by the Congress,...

As with the budget formulation phase, estimation of resource requirements is a significant input into the budget preparation. An important difference is that now the resource estimation must be more detailed and precise since the amounts obtained in the apportionment phase will be the basis for control and measurement.

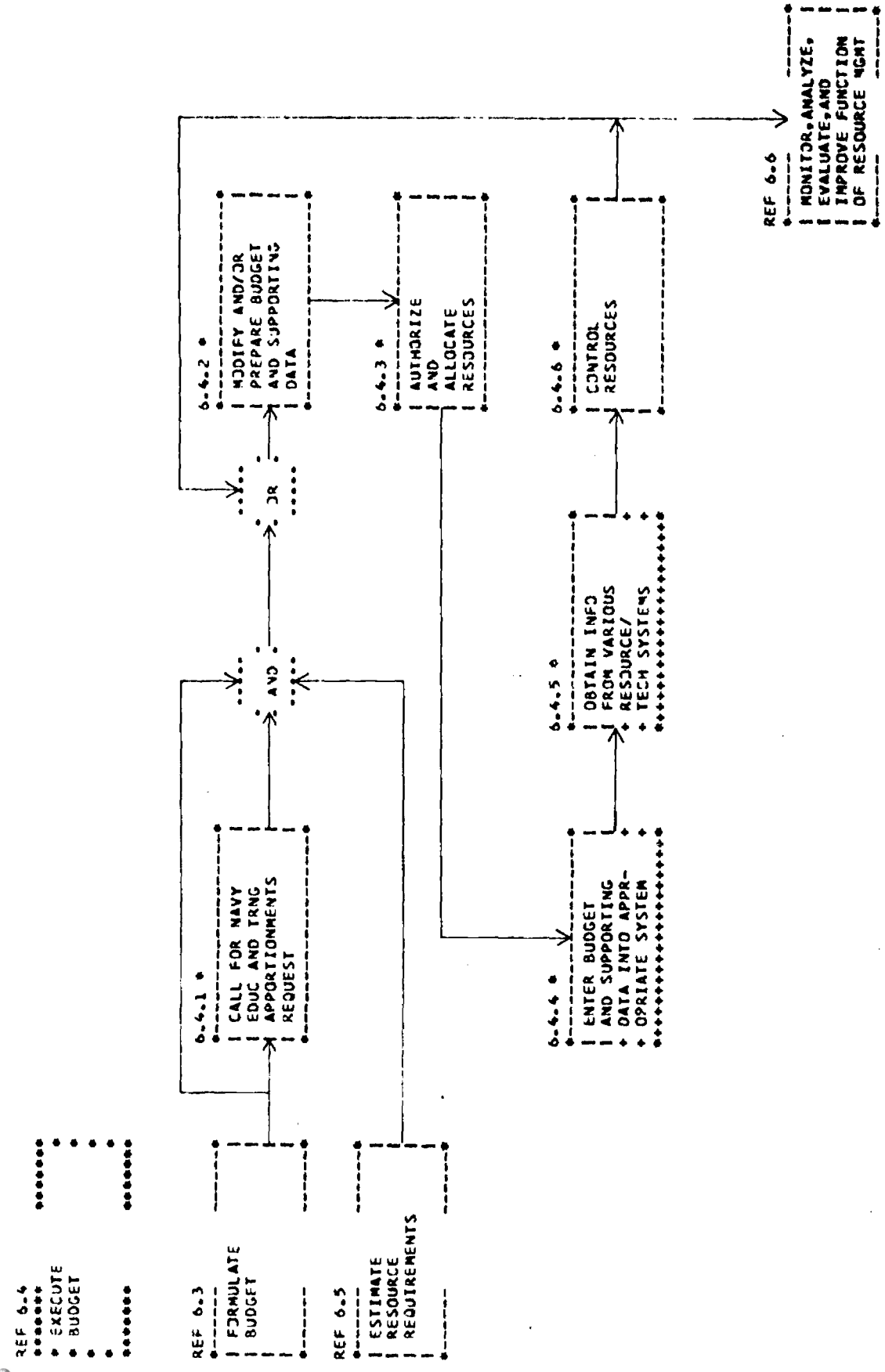

FIGURE VI 6.4-EXECUTE BUDGET

6.4.1 Call for Navy Education and Training Apportionment Request

New guidance for the apportionment phase of the budgeting cycle is prepared at OSD and is retranslated at various command levels. Results of the markup, and formal and informal communications, provide the bases for apportionment guidance. It was observed that activities would prepare guidance well in advance (as early as February) of receipt of upper command guidance, in order that they would be prepared when the actual request was received.

Guidance issued by the functional commands around the first of April was found to be very specific, identifying for example:

1) Flying hours

2) Student outputs

3) Reimbursable authority

4) IMRL requirements

5) MRP targets

6) Resource control totals.

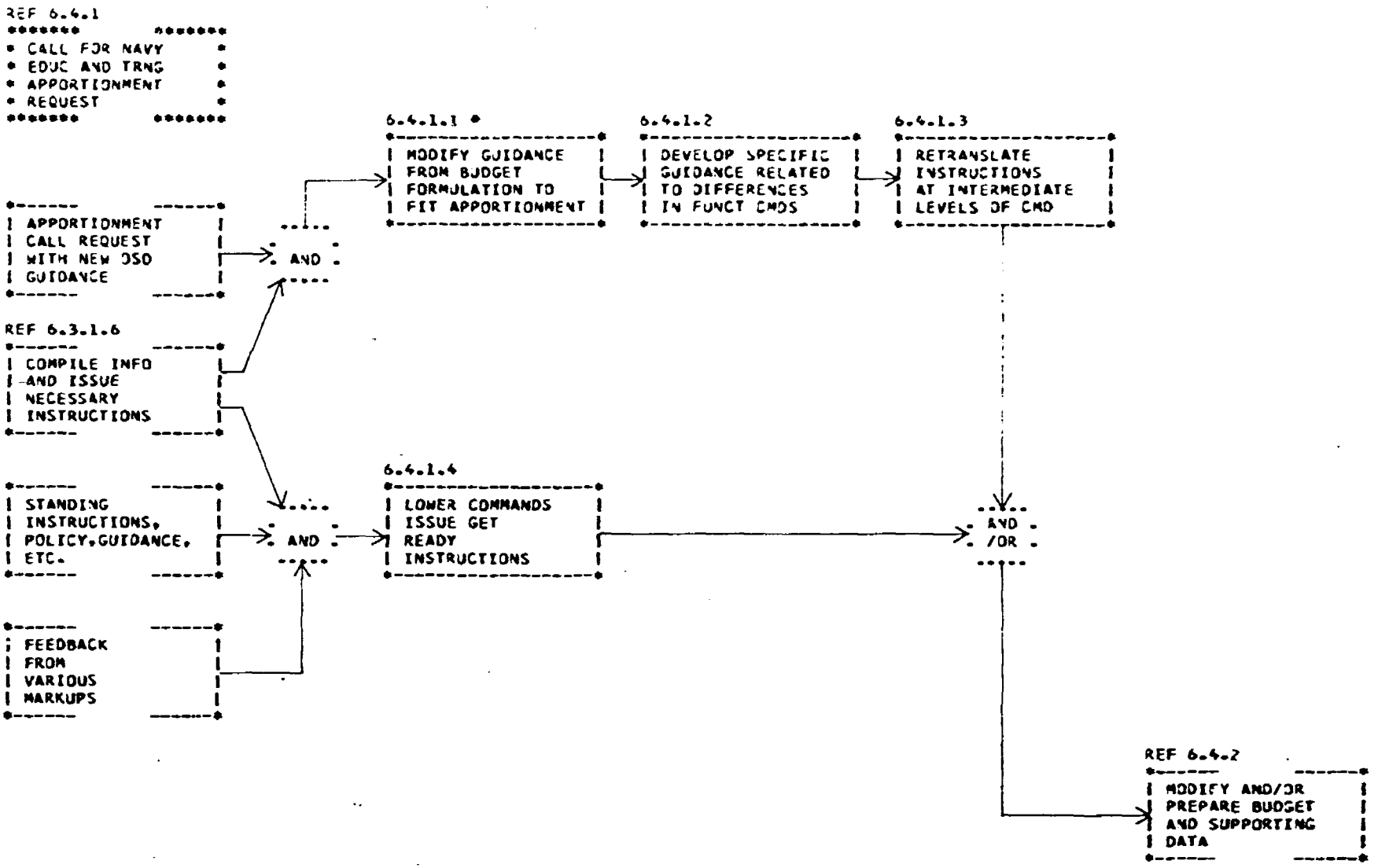

FIGURE VI 6.4.1-CALL FOR NAVY EDUC AND TRNG APPORTIONMENT REQUEST

6.4.1.1 Modify Guidance from Budget Formulation to Fit Apportionment

This flow amplifies the discussion on the previous chart 6.4.1. The general guidance from the budget call cycle is modified based upon the various reviews and markups which have taken place. Updated cost factors may be provided at this time to improve the identification of actual resource requirements by expense element. For some projects/programs additional supporting data may be requested to ensure their survival during this phase of the budgeting process.

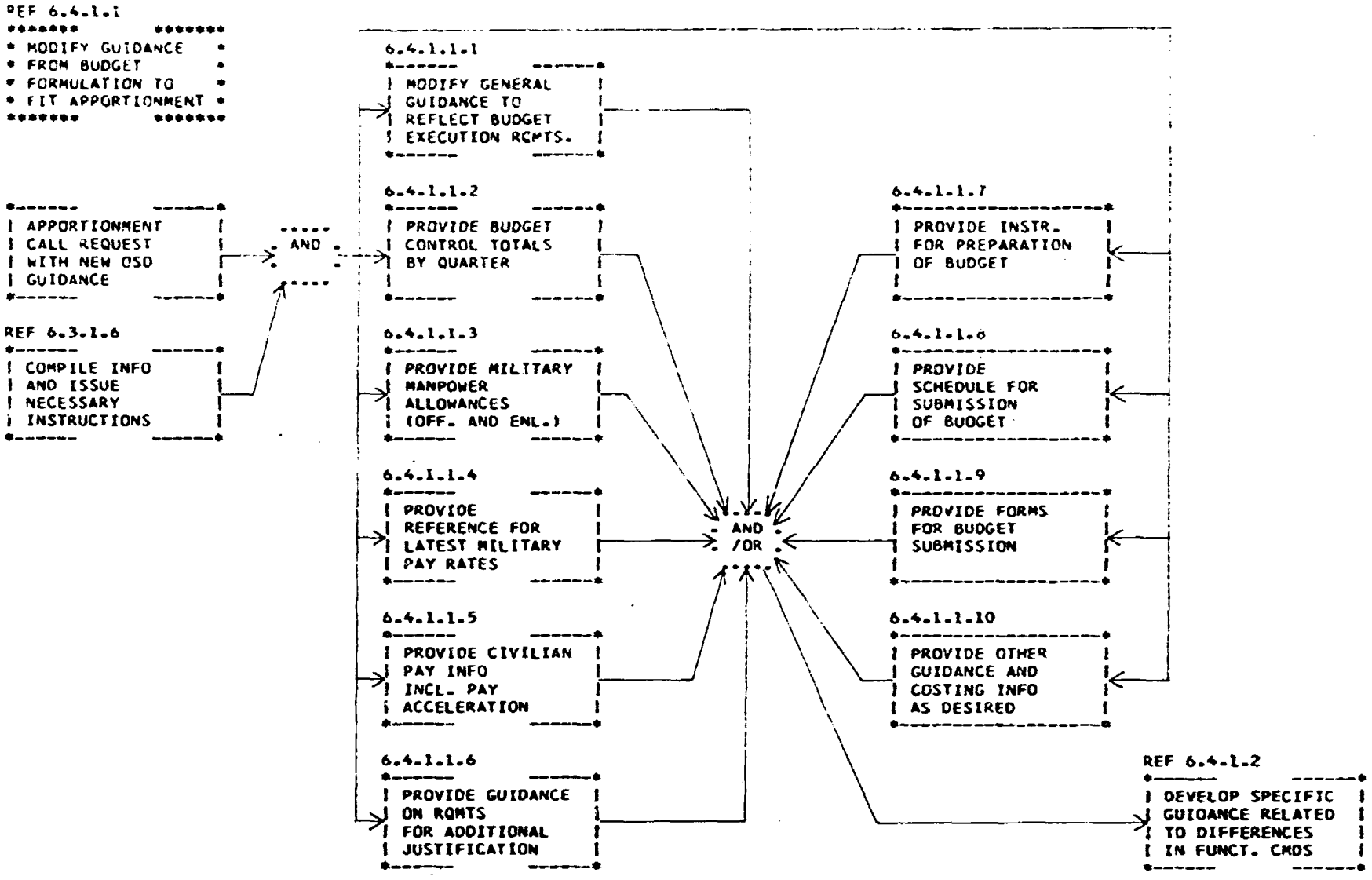

FIGURE VI-6.4.1.1 MODIFY GUIDANCE FROM BUDGET FORMULATION TO FIT APPORTIONMENT

6.4.2 Modify and/or Prepare Budget and Supporting Data

As pointed out in 6.4.1, lower echelon commands may start as early as February requesting that budget preparatory data be gathered. The primary focus was observed to be generally in the O&MN area, analyzing such resource needs as:

1) Civilian personnel

2) Travel

3) Total consumables

4) Equipment less than $1000

5) Repair and renovation (minor).

In most cases, some prioritizing system was asked to be applied to input items so that upper echelon commands could evaluate and modify when faced with a budget decrement. The priority systems, again, appeared inadequate for higher echelon commands to aggregate and maintain an appropriate overall command priority order. This situation exists within any single "element of expense" category, and even more so when prioritizing must take place between expense elements.

The forms used in submitting the apportionment request are generally similar to those submitted as a part of the budget call.

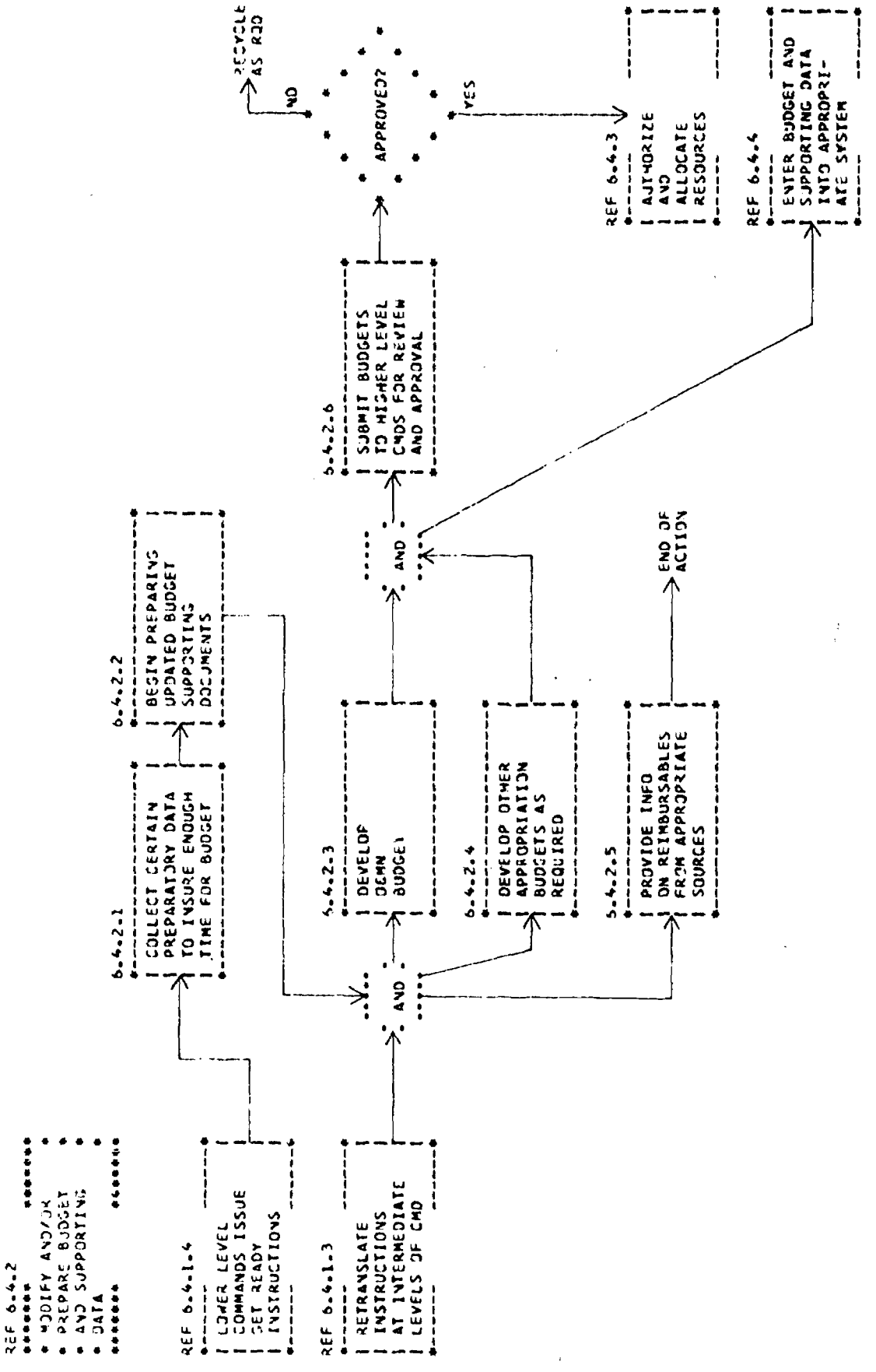

FIGURE VI 6.4.2-MODIFY AND/OR PREPARE BUDGET AND SUPPORTING DATA

6.4.3 Authorize and Allocate Resources

Apportionment requests take a similar approval cycle to the POM and budget call - CNO/NAVCOMPT and OSD/OMB. Funds are made available as a result of:

1) The preparation of appropriation warrants by the Treasury Department and countersigned by the General Accounting Office

2) OSD/OMB approval of apportionments and/or financial plans.

The result of the latter approval cycle may and identification of certain items on which resource expenditures should be deferred. The resource limitations and deferrals are then passed down through the various command levels and end up providing the Operating Budget holder with an authorization to upend funds.

It was noted that this authorization is interim early in the fiscal year since the appropriation act has not generally been passed. Activities, therefore, are limited in their rate of expenditure (no greater than the rate for the similar period in the previous year) and in their ability to obligate funds for new projects/programs, especially if there is reason to believe that the new project/program is being strongly resisted at higher levels of the Navy or government.

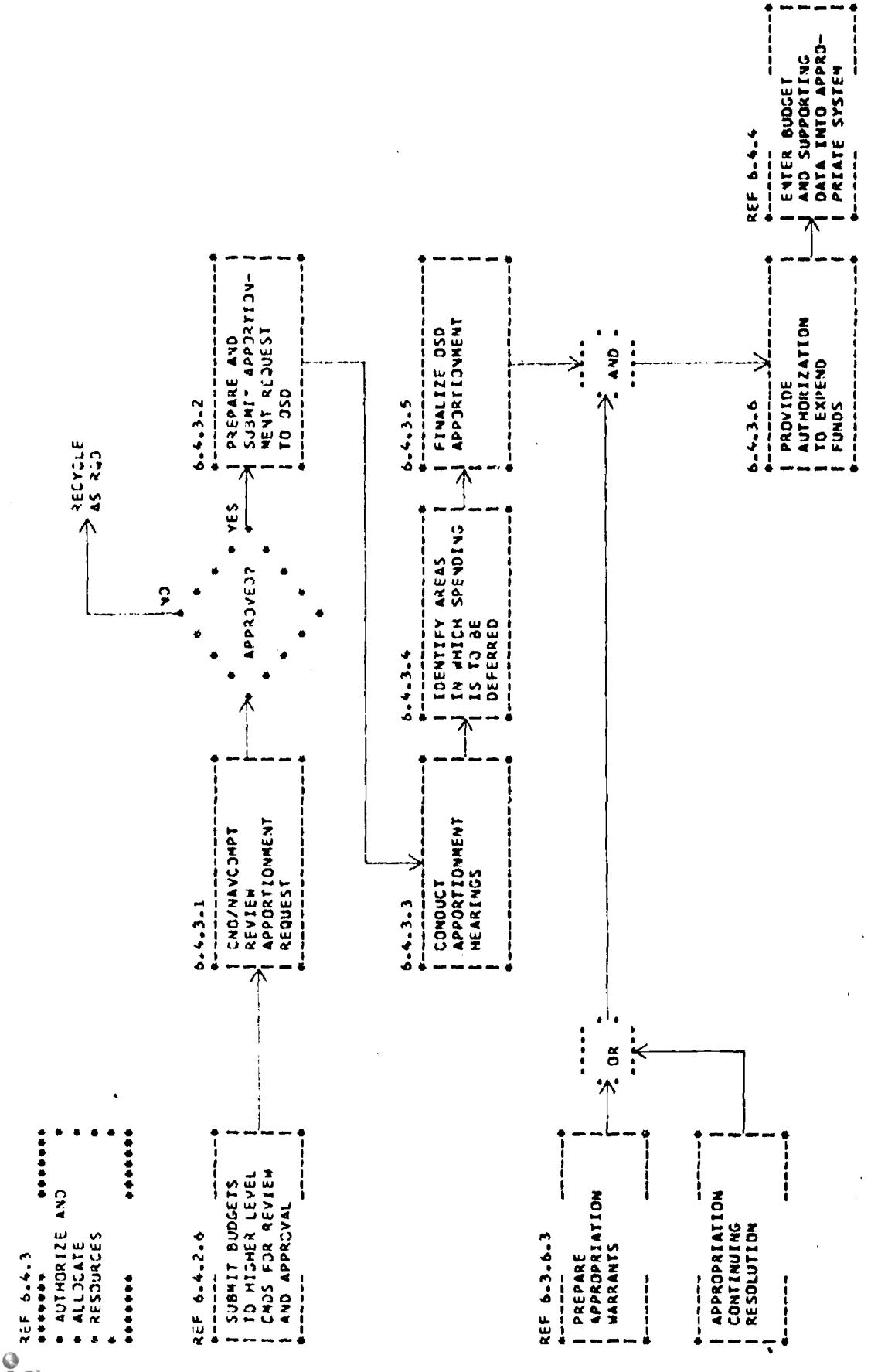

FIGURE VI 6.4.3-AUTHORIZE AND ALLOCATE RESOURCES

6.4.4 Enter Budget and Supporting Data into Appropriate System

Management plans are reduced to a budget which is based upon an approved workload. The financial and work unit data are entered into ADP systems by the Authorized Accounting Activity (AAA). There was no intent in this study to analyze the accounting procedures in detail. It is felt, however, that the entire RMS budget preparation process involves:

1) Excessive manual activities

2) Lack of data processing standards for producing and inputing source data

3) Confusion in the numbering of input forms and reports.

Several of the persons interviewed understood the RMS system well, however, in most cases it was difficult to gain an overall understanding because of the fragmentation of responsibilities or because some military personnel were new or generally unfamiliar with financial management.

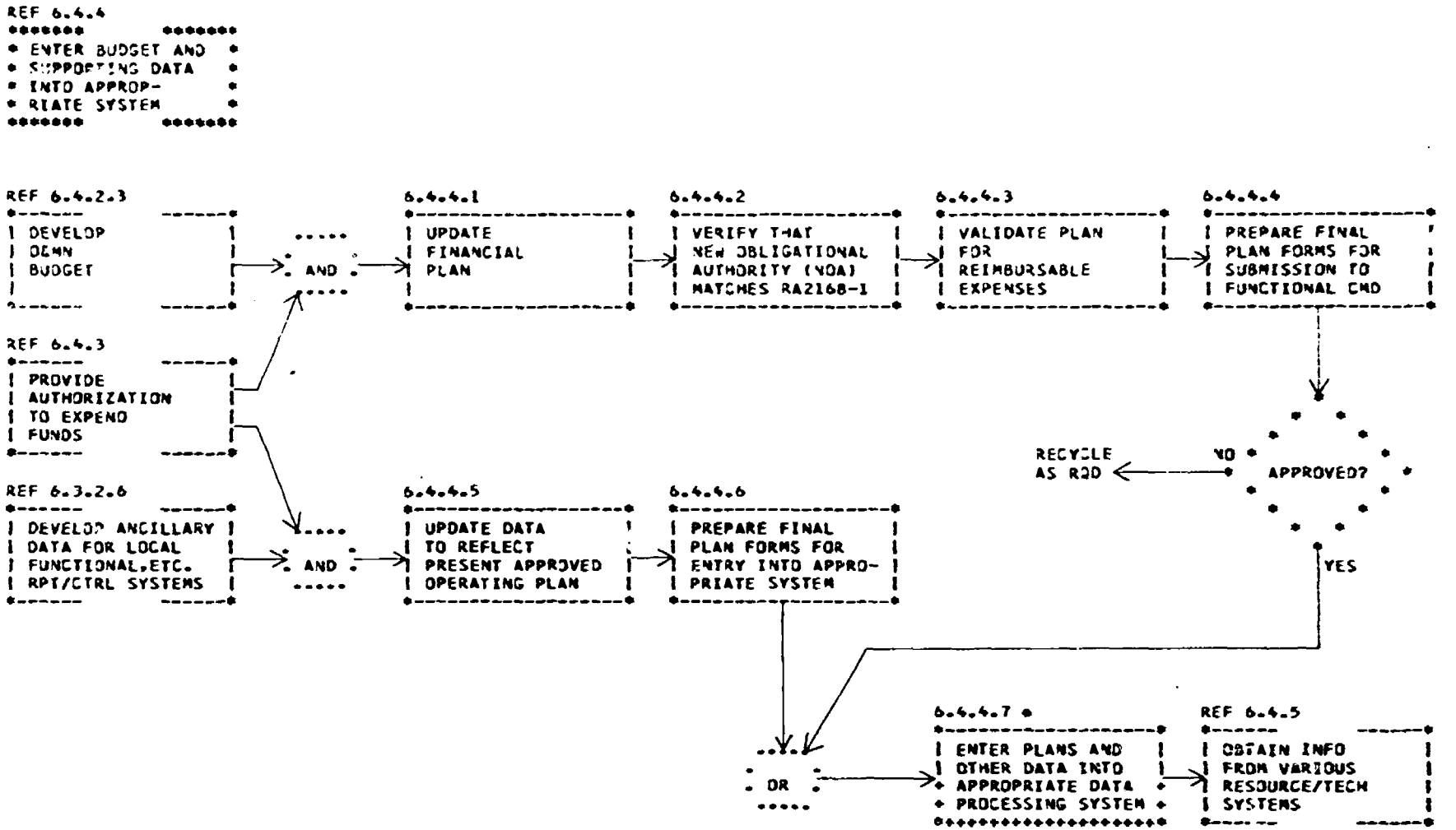

FIGURE VI 6.4.4—ENTER BUDGET AND SUPPORTING DATA INTO APPROPRIATE SYSTEM

6.4.4.7 - Enter Plans and Other Data into Appropriate Data Processing System

A number of planning and control systems were observed. Some had application across the entire training command, others were available at the activity or school level. Those most frequently observed were:

1) TRAD - Training Administration
The TRAD is a data base to support accounting and reporting procedures for student and support personnel within CNTECHTRA, COMTRALANT, and COMTRAPAC. Input is provided via an OCR Form 1500/6, and details are covered in CNTECHTRA Instruction 1500.9A dated 25 July 1973.

2) FTDS - Formal Training Data System
The FTDS provides a data base in the Master Course Record File (MCRF) and Student Master File (SMF) which is used to:

> ...justify training funds, measure utilization of training facilities, provide a standardized system to centrally monitor training efficiency, and automate the up-dating of training data on the enlisted master tape. Reference information was obtained through BUPERS Instruction 1510.108C dated 8 August 1972.

3) NATIS - Naval Aviation Training Information System
NATIS is a "mechanized management information system," IFTIS (In-Flight Information Sub-System) is a major subsystem under NATIS used to assist daily syllabus flight scheduling for Student Naval Aviators (SNA's) and Instructors Under Training (IUT's). Details of NATIS are covered in CNATRA Instruction 5230.1 dated 18 May 1972.

4) Mechanized Course Cost System
The system provides "uniform cost collection and reporting." The data output from the mechanized course cost system is intended to:

a) Answer inquiries from higher authority and congressional representatives
b) Provide information which will aid managers in making decisions concerning training
c) Support training budgets
d) Provide basic cost data which can be used to develop cost of training chargeable for military grant in aid, military sales program and charges to DOD contractors for training.

Several manual systems were observed for recording control data. These were in the form of special forms, cards, log sheets, etc. These were primarily in the areas of quota control and equipment utilization (scheduling).

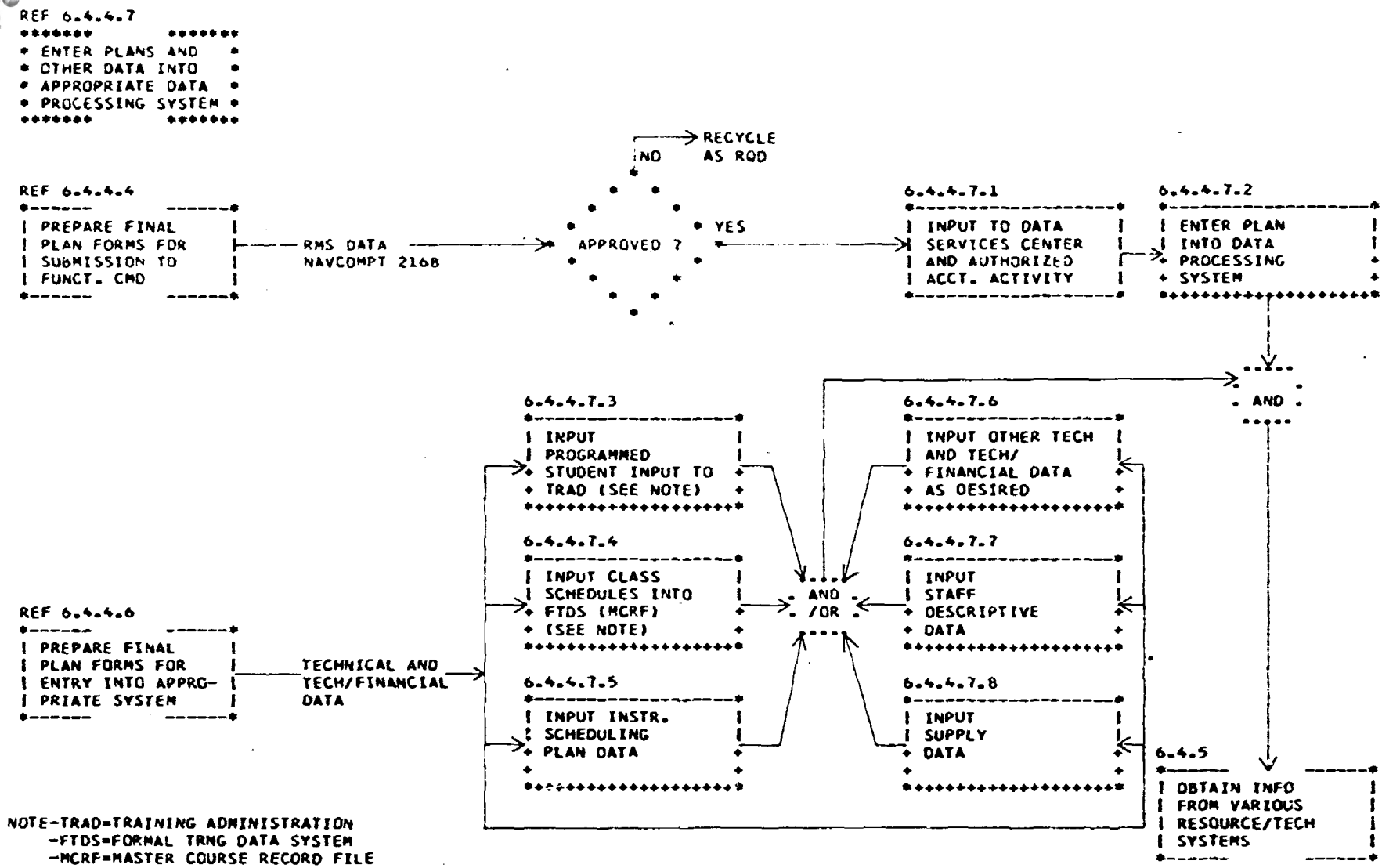

FIGURE VI-6.4.4.7 ENTER PLANS AND OTHER DATA INTO APPROPRIATE DATA PROCESSING SYSTEM

6.4.5 - Obtain Information from Various Resource/Technical Systems

Resource and technical data must be supplied to the various systems throughout the reporting period so that meaningful data can be reported back to the activity for control purposes. Even though it is recommended that activities maintain minimal records with which to determine resource status prior to the availability of reports from the AAA, a substantial amount of manual activity was noted. This was apparently due to the timing and accuracy of the basic reporting documents. It would seem from the comments that there are excessive errors contained in the input data which promulgates throughout the system. Thus, there is a real question as to how good a job is done to verify the reasonableness and/or accuracy of input data.

The specific verification procedures were not observed nor were the steps the AAA went through in processing the data. However, an important aspect of increasing the effectiveness of resource control is to have resource managers assured that their reports are highly accurate.

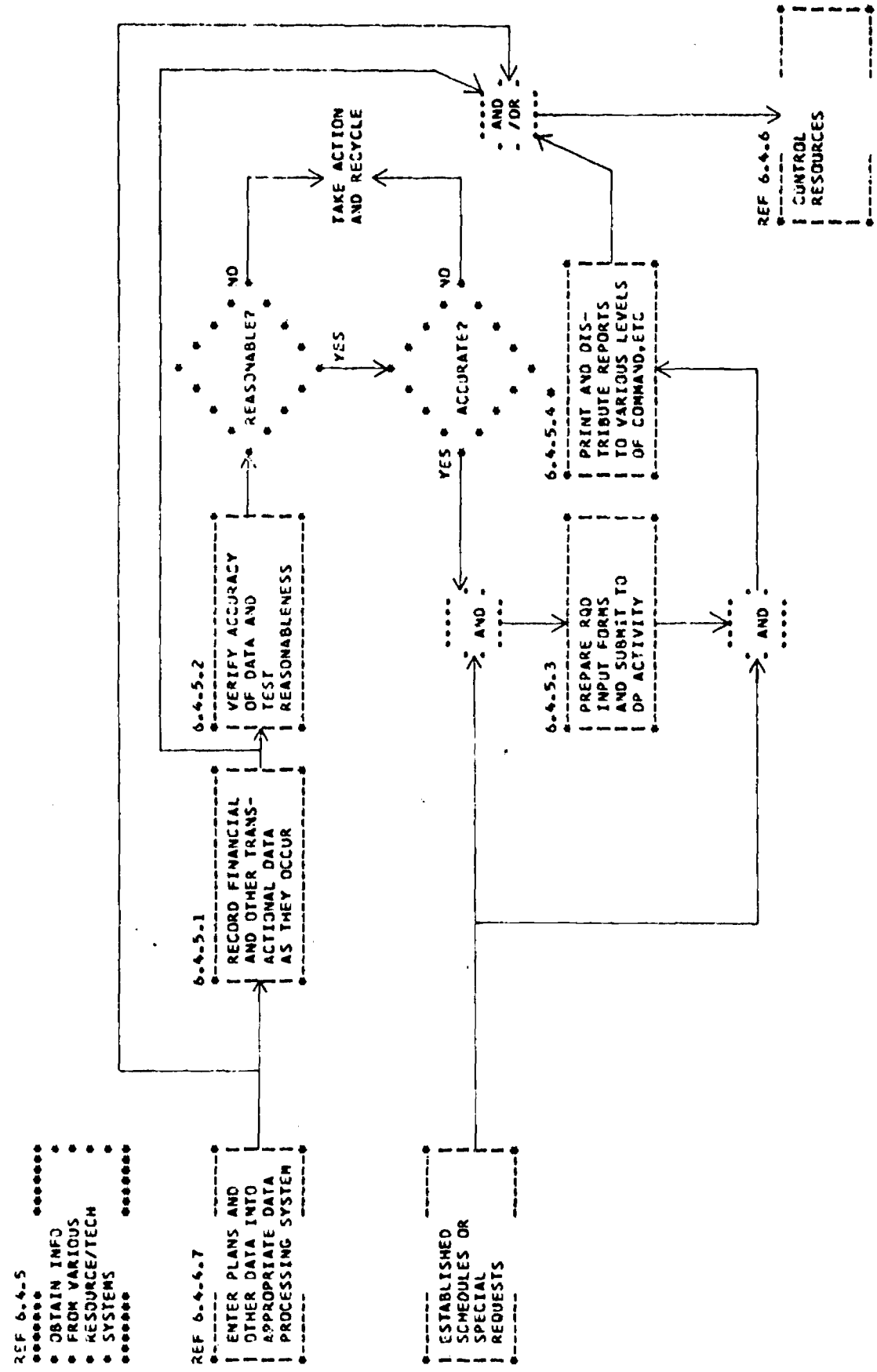

FIGURE VI 6.4.5-OBTAIN INFO FROM VARIOUS RESOURCE/TECH SYSTEMS

6.4.5.4 - Print and Distribute Reports to Various Levels of Command

A sizable number of reports are available to training managers. The major RMS and Personnel reports are shown in this flow. Other major reports include:

Per Capita Cost to Train Report	OPNAV 7310-4
Course Cost Report	CNTECHTRA 7310-13
School/Course Report	CNTECHTRA 1500-6
Formal Training Data Report	BUPERS 1510-13
Formal Training Course Identification Report	BUPERS 1510-18

A substantial number of reports were observed as being available at the activity or school level. These include, among others:

- Attrition Analysis Reports
- On-Board Disenrollees Reports
- Equipment Listing Reports
- Parts and Supply Listing Reports
- Instructor Time Utilization Reports
- Personnel Listings
- Medical Reports

Several locations were noted to have systematically defined their data needs, others were in the process of defining systems to make more effective use of the existing data bases and to reduce the amount of manual activity in the preparation of reports. Figures VI 6.4.5.4 A-G provide examples of significant efforts toward more systematic data management.

In an idealized training system there should be greater standardization and integration of methods, procedures, and equipments used in the development and processing of management information.

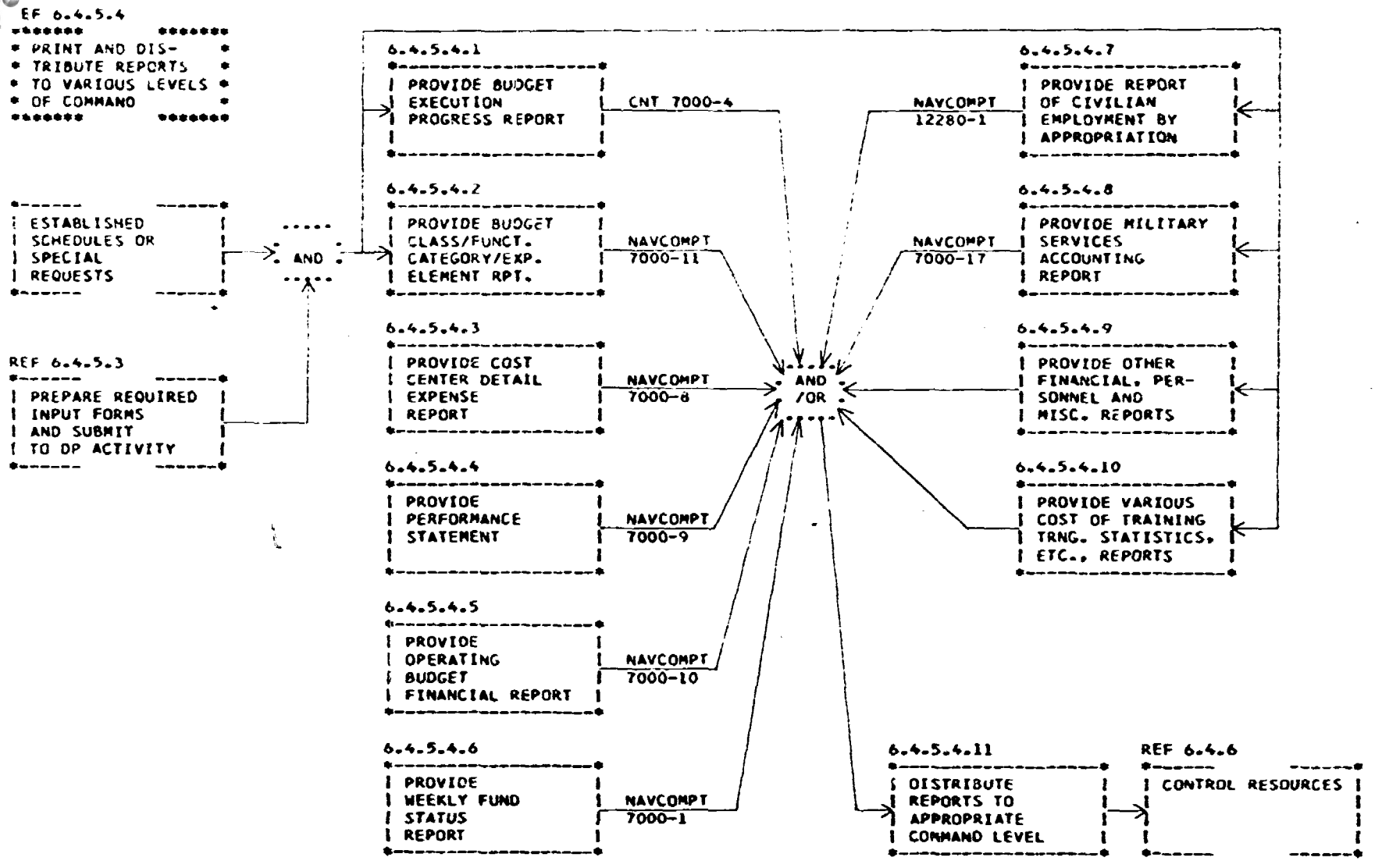

FIGURE VI-6.4.5.4 PRINT AND DISTRIBUTE REPORTS TO VARIOUS LEVELS OF COMMAND

6.4.5.4A-G Sample Flows of Existing/Planned ADP Applications

Inquiries were made at various locations visited as to the types of data bases that existed and as to the types of data processing applications which were used to more effectively control resources. Following are several flows obtained during the field visits. Figure VI 6.4.5.4A was provided by CNTECHTRA, Memphis, Tenn., and represents present and future data system's integration to obtain course training costs. Figures VI 6.4.5.4B-G were provided by the Naval Submarine School, Groton, Conn., and represent a variety of data processing applications used to monitor and control resources.

A - Cost of Training

B - Enlisted-Officer-Civilian Staff

C - Supply Runs

D - Update and List Hardware Support

E - Instructor Time Utilization

F - Basic Enlisted

G - Advance School

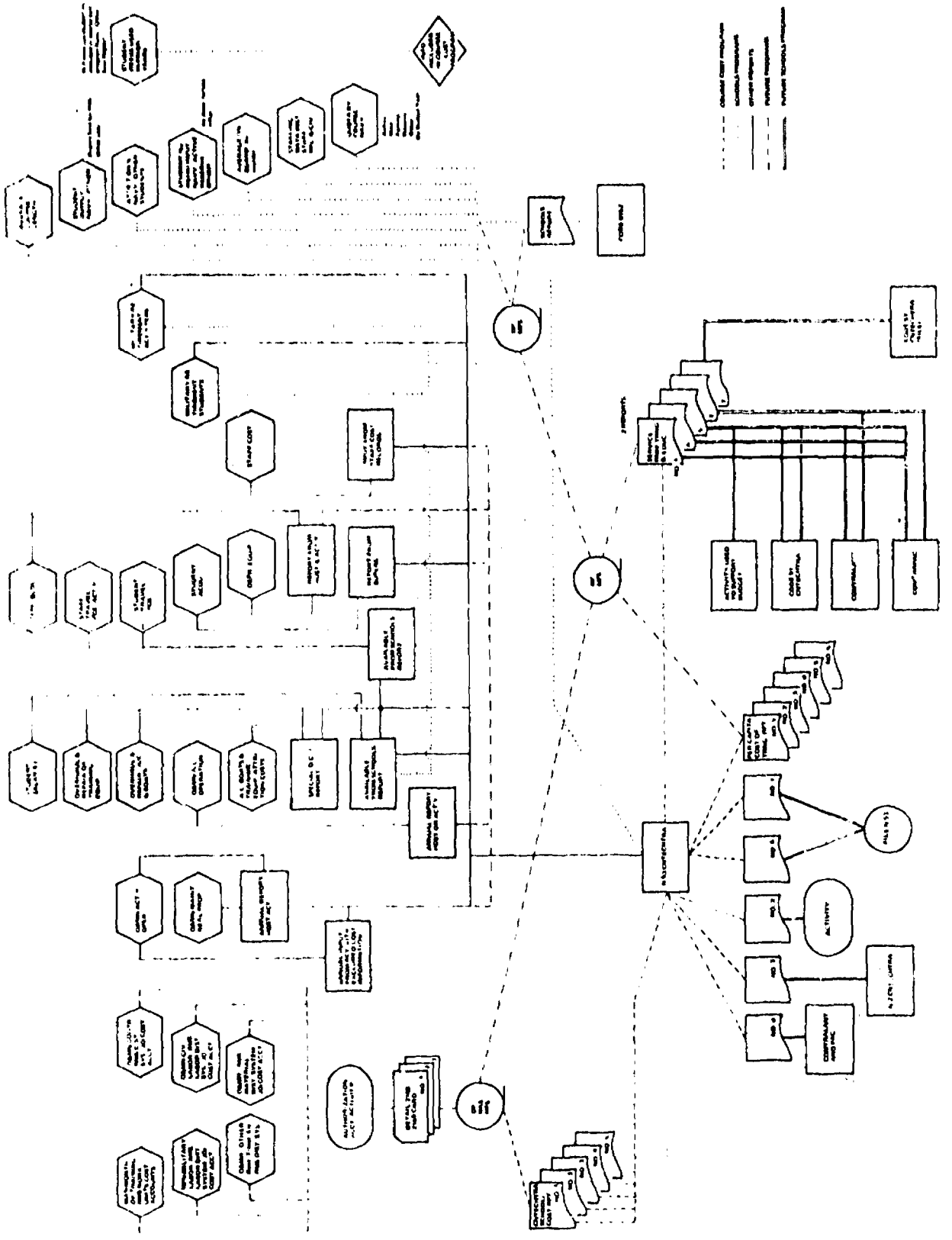

FIGURE VI 6.4.5.4A - COST OF TRAINING

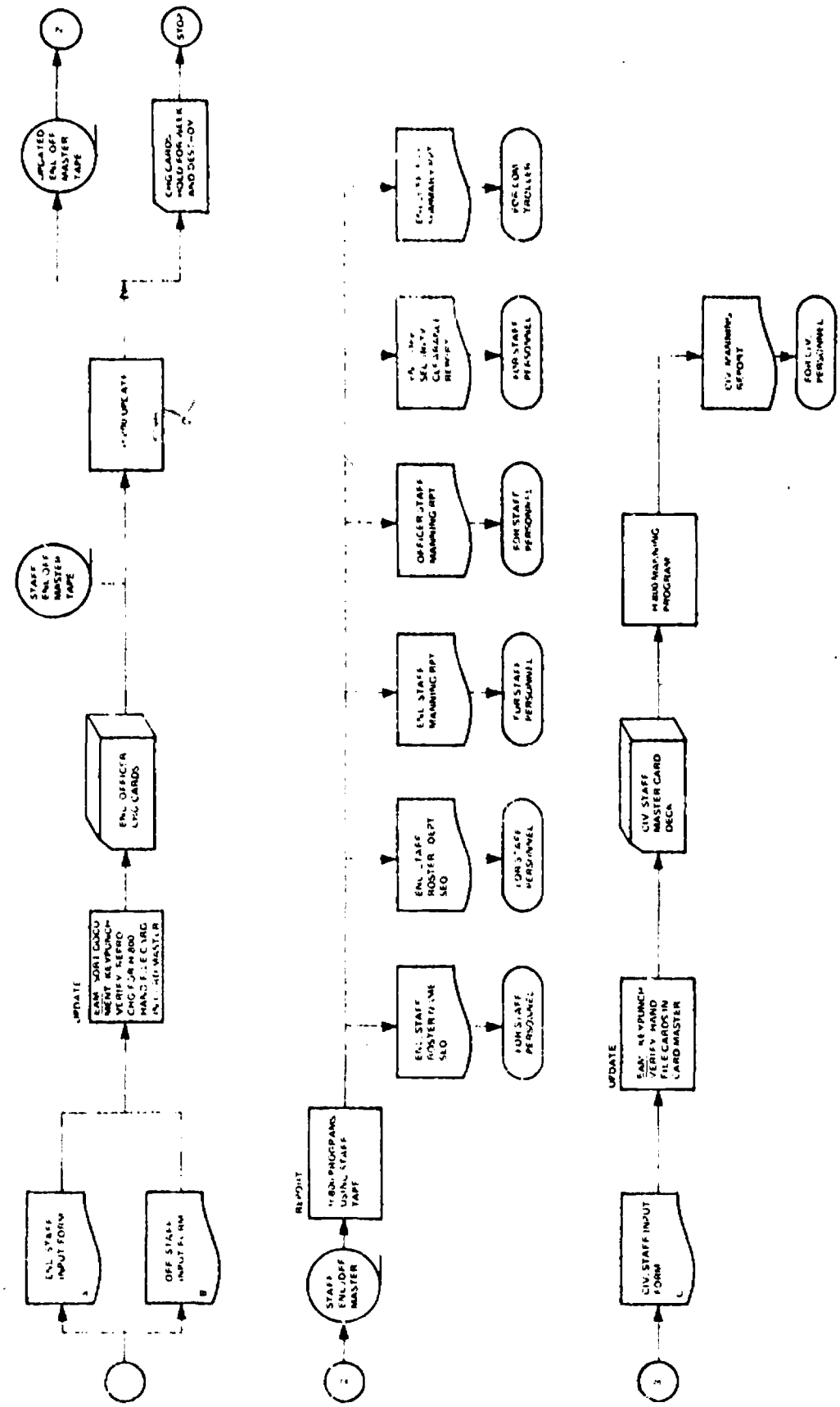

FIGURE VI 6.4.5.4B - ENLISTED - OFFICER - CIVILIAN STAFF

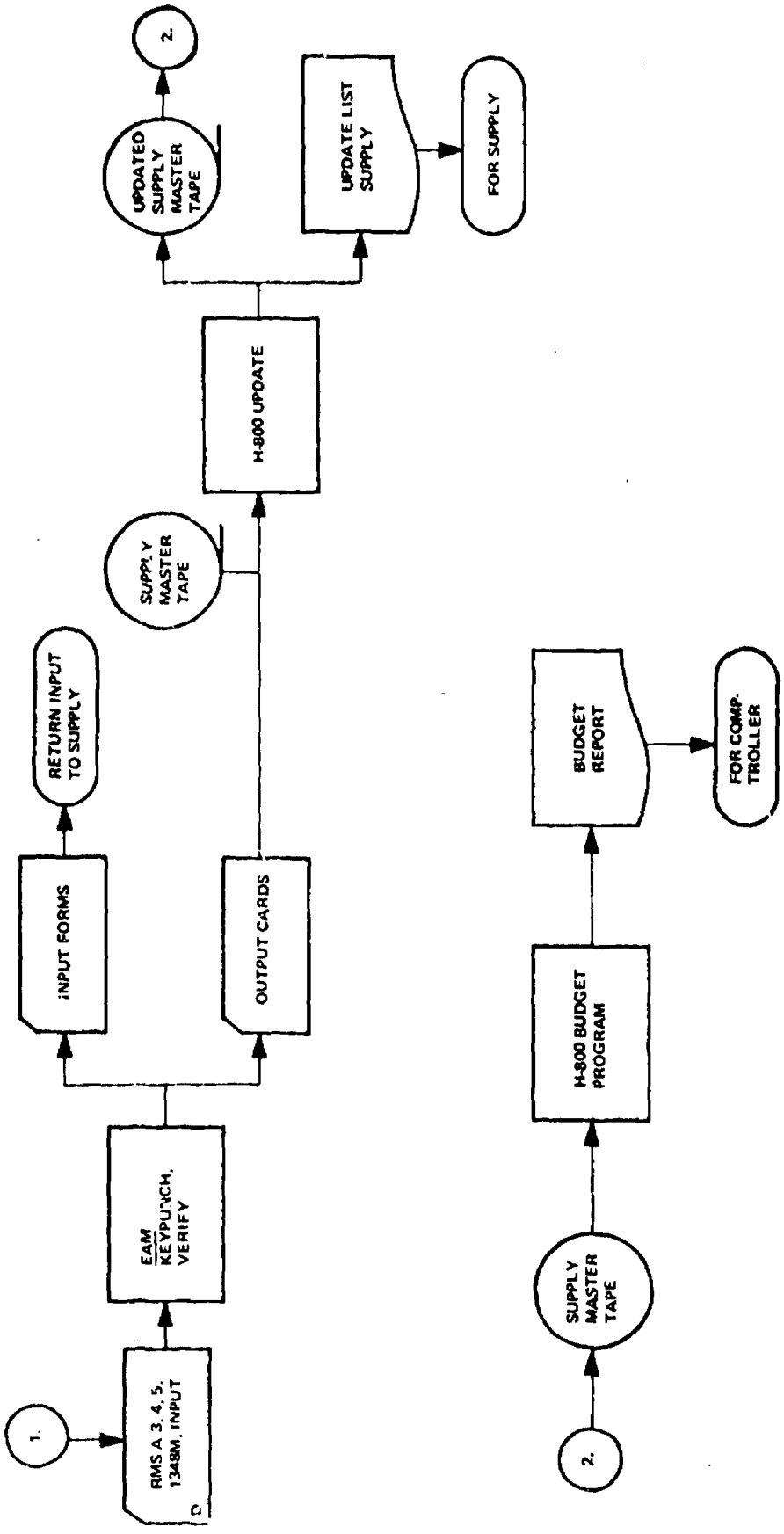

FIGURE VI 6.4.5.4C - SUPPLY RUNS

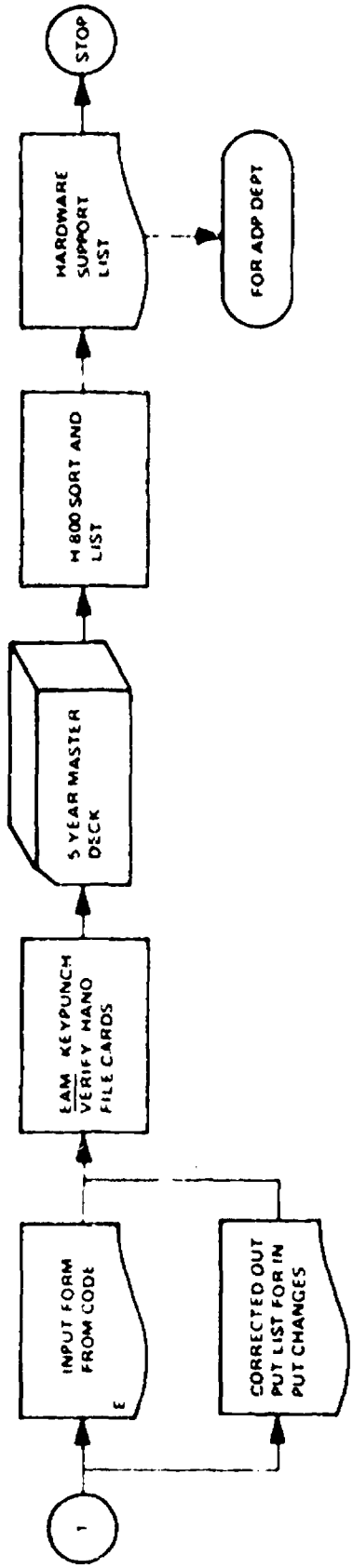

FIGURE VI 6.4.5.4D - UPDATE AND LIST HARDWARE SUPPORT

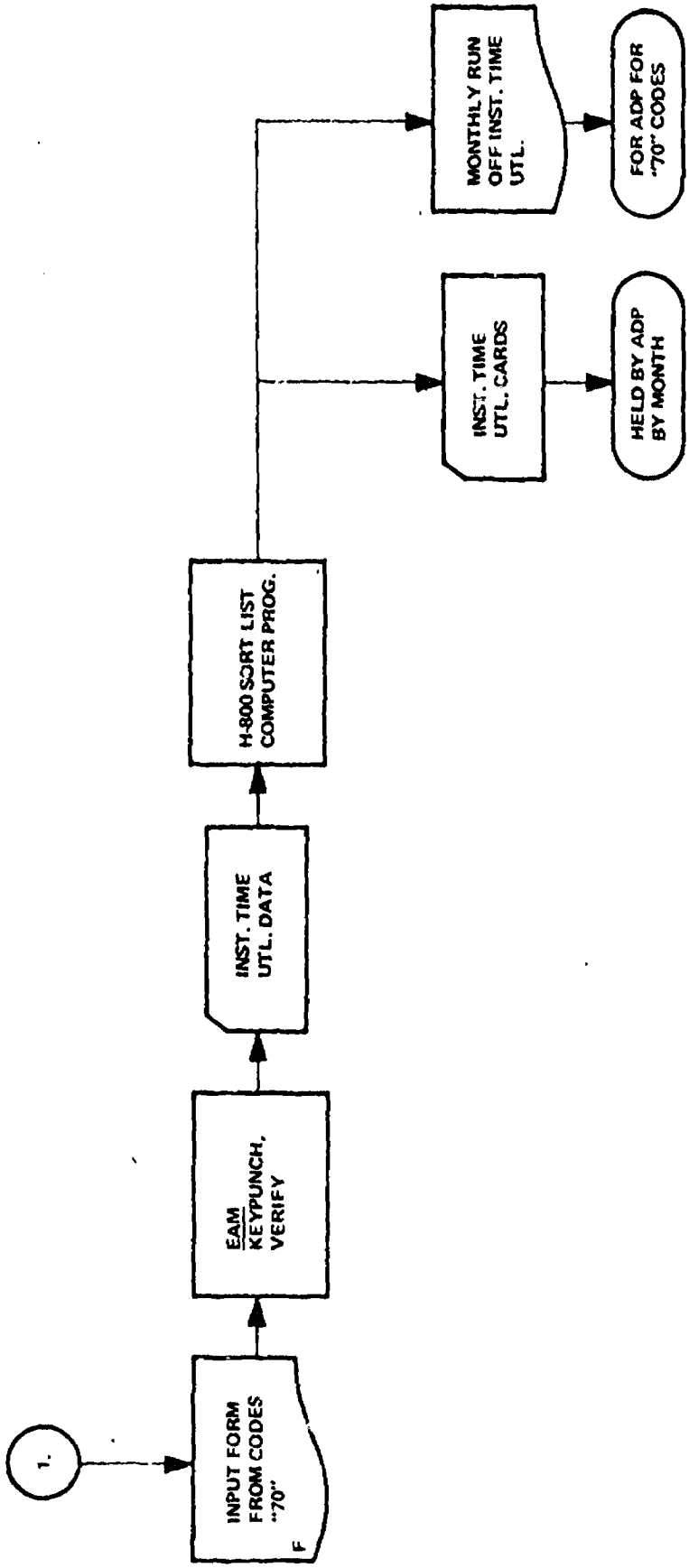

FIGURE VI 6.4.5.4E - INSTRUCTOR TIME UTILIZATION

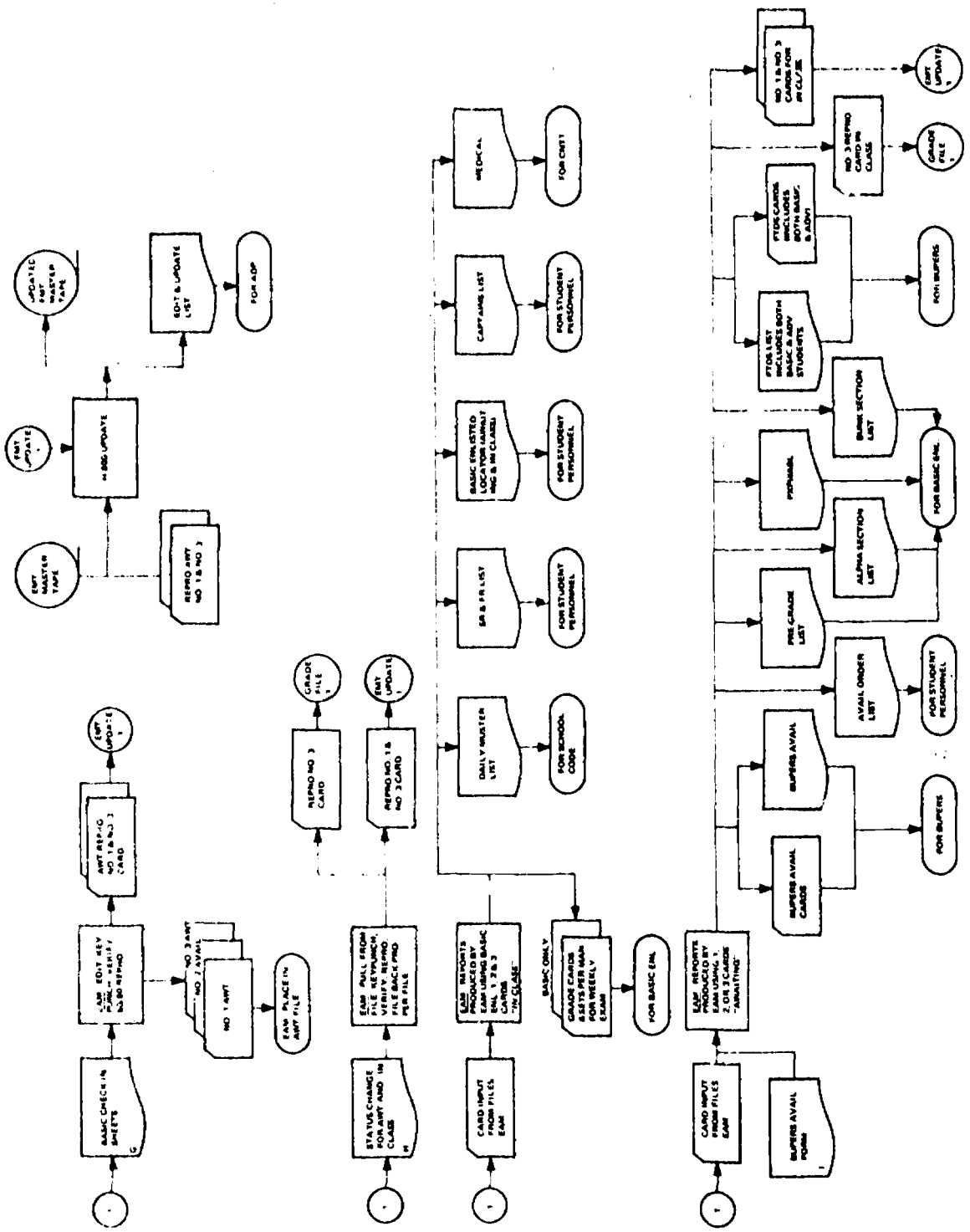

FIGURE VI 6.4.5.4F - BASIC ENLISTED

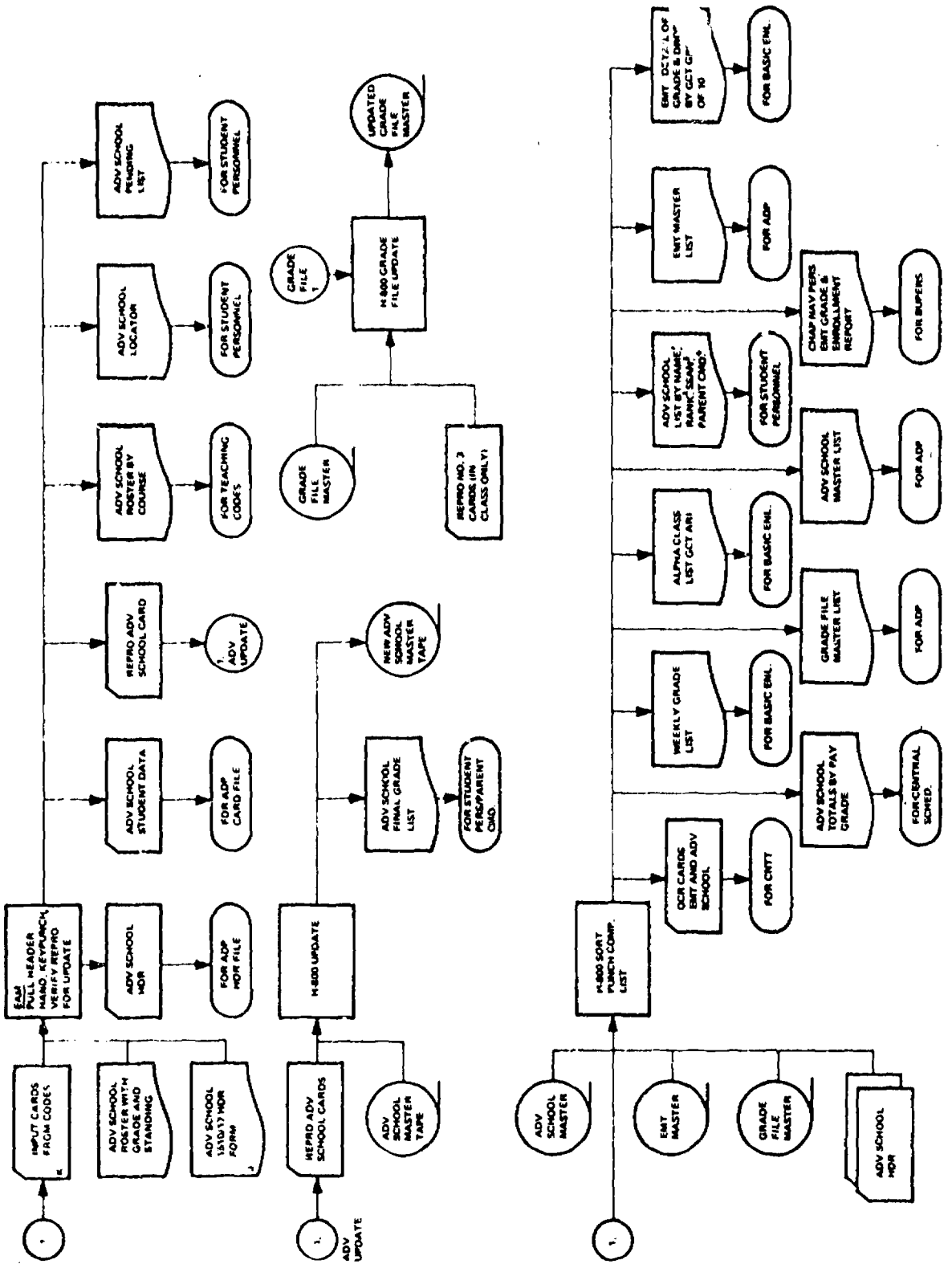

FIGURE VI 6.4.5.4G - ADVANCE SCHOOL

6.4.6 Control Resources

The key to effective resource management is outlined in the following flow. Three steps are necessary:

1) A means must be available for identifying variations between planned and actual resource

2) The identified variances must be subjected to careful analysis and thoughtful evaluation

3) An action to correct the variance must be taken in a timely manner when appropriate.

Wide differences in the application of this approach to controlling resources were observed within the current training system. While variances may have been identified, it was usually the result of a manual system (e.g., use of the 7000-1 Weekly Fund Status or even memorandum records), rather than through the use of a performance oriented report (e.g., 7000-9 Performance Statement). In fact the 7000-9 Performance Statement was found to be generally unavailable at the activity level. When it was available, the first report was usually received about mid-fiscal year due to the delays in obtaining a firm budget following the apportionment cycle.

The analysis and evaluation of variance was not readily observed to be a significant activity. This is perhaps due to several reasons:

1) The operating mode of excessive arbitrariness (e.g., cut off all travel, etc.), may preclude the need for in-depth analytic efforts

2) The preoccupation with obtaining funding for unplanned and/or unfunded requirements may have overshadowed analytic needs

3) Inadequate professional training and frequent reassignment may have tended to reduce the importance of analysis.

While numerous actions were noted to reduce or bring expenses into line with plans, many appeared arbitrary and were not the result of careful analyses.

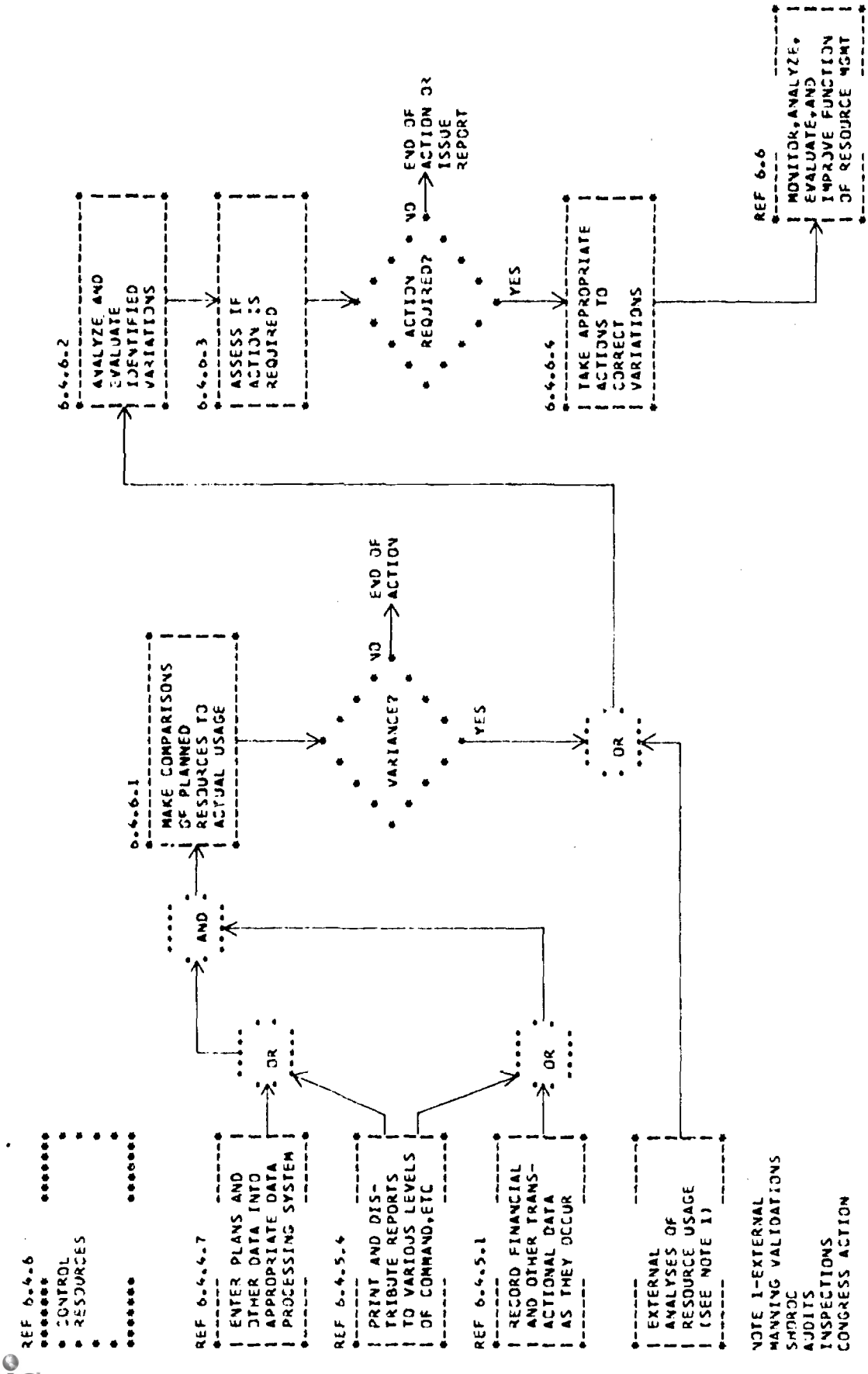

FIGURE VI 6.4.6-CONTROL RESOURCES

6.5 Estimate Resource Requirements

Estimation of resource requirements is a critical function within the planning and budgeting process. The major difference between the application of this function to planning as opposed to budgeting is the refinement of the process for obtaining the resource amount. General planning factors may suffice for pricing out POM inputs, more specific estimates are needed in identifying individual elements of expense.

In training, the major driving force is the number of students entering the training pipeline. A high percentage of resources can be calculated directly once an accurate estimate of student load is obtained. Unfortunately, student loading was observed to be a very difficult factor to estimate accurately.

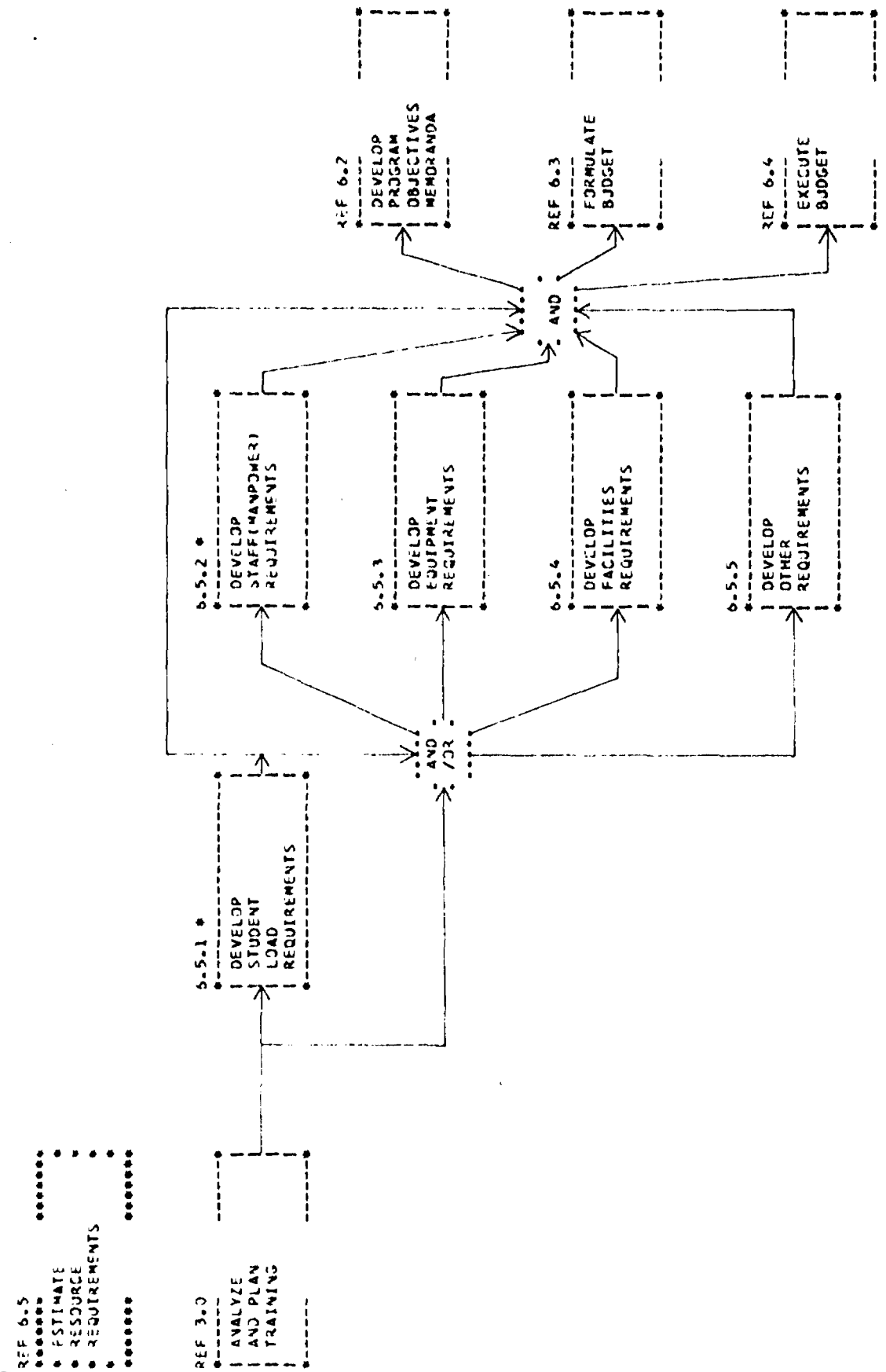

FIGURE VI 6.5-ESTIMATE RESOURCE REQUIREMENTS

5.5.1 Develop Student Load Requirements

This flow shows the major student load inputs used in deriving training resources. There is a wide variation in the methodology for obtaining student loads, from the computerized STAPLAN output for "A" school requirements to the manually determined "C" school requirements.

With each type of input, the Training Command must determine whether it has the capability to meet the requested load. If the requirement exceeds capacity, the particular constraints are defined. Constraints were noted primarily in two categories -- lack of instructor personnel and/or insufficient training devices/equipment. Lack of messing or berthing facilities were possible, but less likely, constraining factors. The feasibility check is generally made at the activity or school level, although methods are being developed at the functional command level for making similar analyses rapidly.

One high level assessment model used in pilot training resulted from the Integrated Facilities Requirements Study (IFRS) developed by Operations Research, Inc., for the Navy under Contract N00025-67-C-0031. It permits rapid evaluation of capabilities for accomplishing a given Pilot Training Rate (PTR). While the model can be applied at various command levels, it was observed to have fallen into disuse at the CNO level because of lack of qualified personnel to operate it. There appeared to be considerable interest in applying it at the functional command level, i.e., CNATRA.

A system of identifying changes in staff requirements with changing student loads is also being developed within CNTECHTRA. Besides the variable staff needs, the level at which certain other factors, such as equipment, messing, berthing, etc., constrain the input load is being identified. In the ideal situation, this approach should be broadened and combined with a marginal costing model for maximum effectiveness in assessing varying student loads.

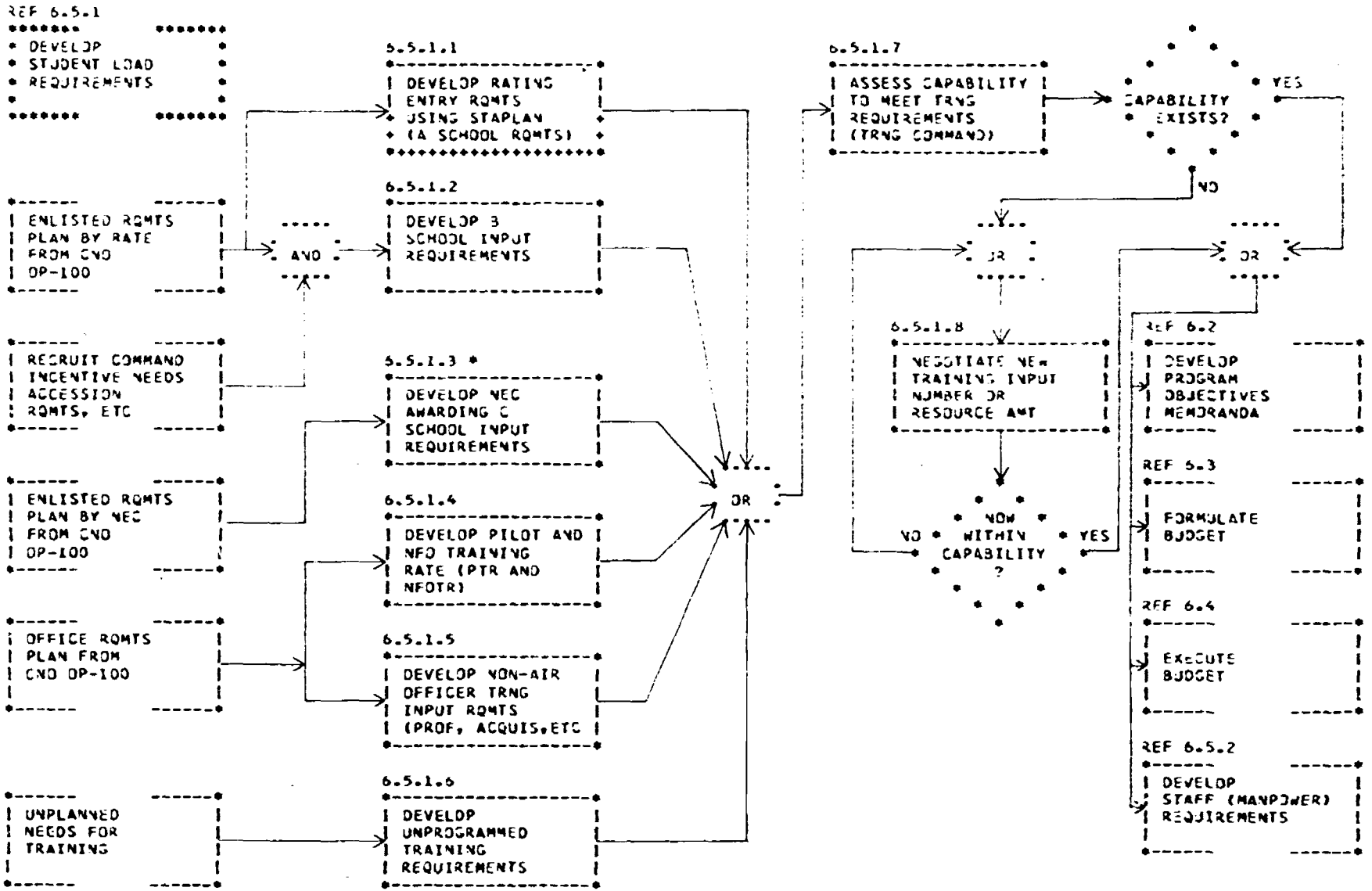

FIGURE VI 6.5.1-DEVELOP STUDENT LOAD REQUIREMENTS

6.5.1.3 Develop NEC Awarding "C" School Input Requirements

This flow presents the algorithm for determining student input loads for each NEC awarding "C" school. While "A" school planning under the computerized STAPLAN is oriented toward growing petty officers over a three year time horizon, "C" school planning considers a one year planning cycle which is extended over five one-year periods. This major difference in philosophy makes the "C" school algorithm somewhat simpler than that used for calculating "A" school load, however, the tenuousness and variability associated with some of the planning factors probably make "C" school planning less exacting.

In the idealized training system, an improved process for identifying the various input factors needs to be established. There was an observed reluctance to consider a quota system; however, it appeared that previous quota systems tended to force a level of training beyond what was actually required. It is possible to establish a quota system which sets the optimum Navy-wide level of training by NEC, and then forces negotiation between operations and training management in order to achieve an appropriate distribution of the quotas. This approach would also be consistent with increasing Congressional control of the Average-On-Board (AOB) figure.

The present "C" school planning was noted to be done manually. Automation of the process should permit the focus to shift from the computational aspects of the process to a more extensive analysis and evaluation of the model parameters and variables.

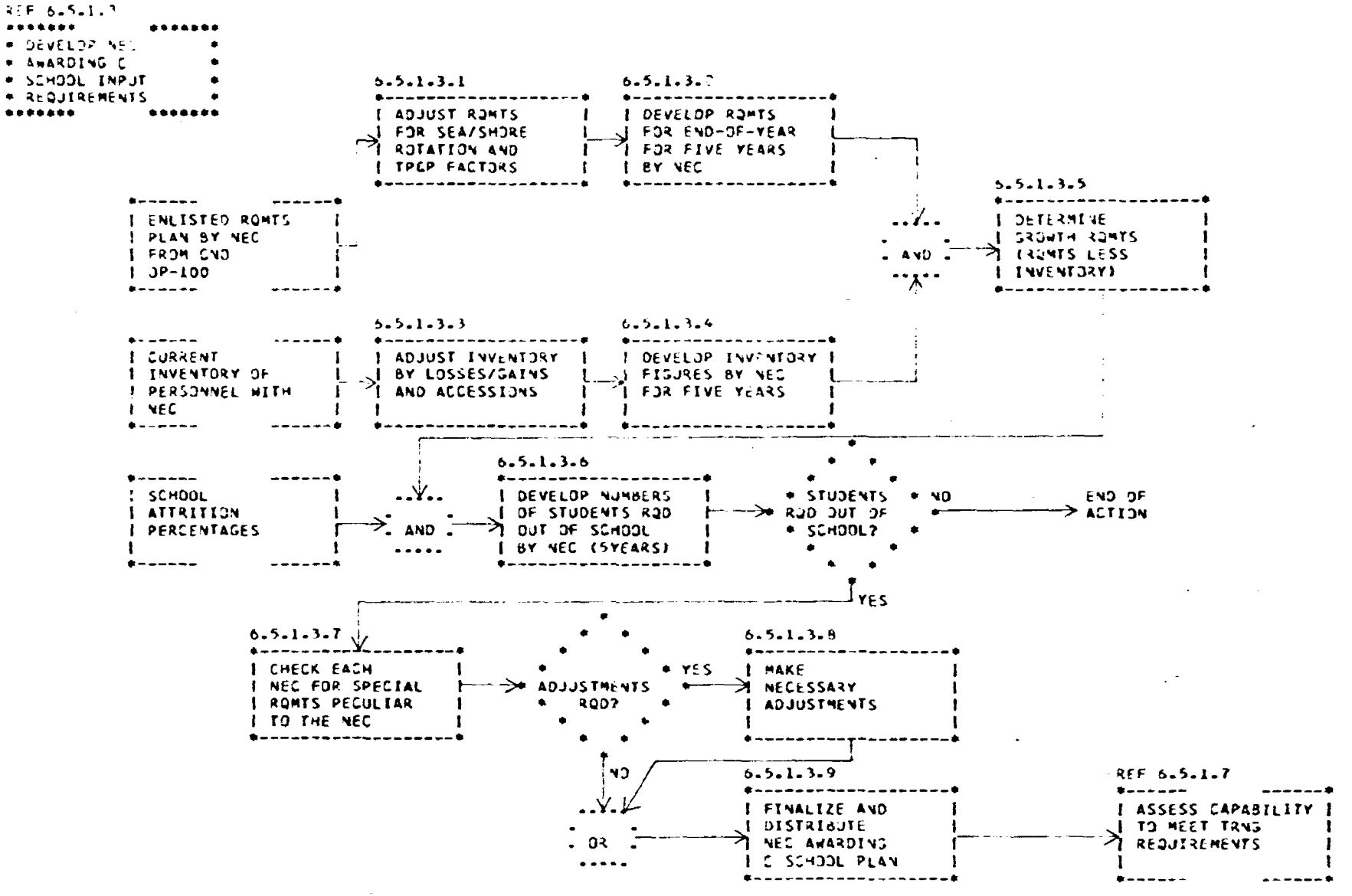

FIGURE VI 6.5.1.3-DEVELOP NEC AWARDING C SCHOOL INPUT REQUIREMENTS

6.5.2 Develop Staff (Manpower) Requirements

The major driving force in determining training staff requirements is student load, although a sizable portion of the staff is involved with project or overhead activities. Wide variations were observed in the detail to which planning factors had been established. Some were at a program level, others could be applied on a daily (if not hourly) basis within the course of study. There would appear to be no definable level of detail which could be considered more correct, rather it is a function of the homogeneity of the instructional process across the entire program/course. Because of the wide variation in planning factor detail, the process is quite time consuming and subject to error when performed manually. The whole process appears amenable to automation.

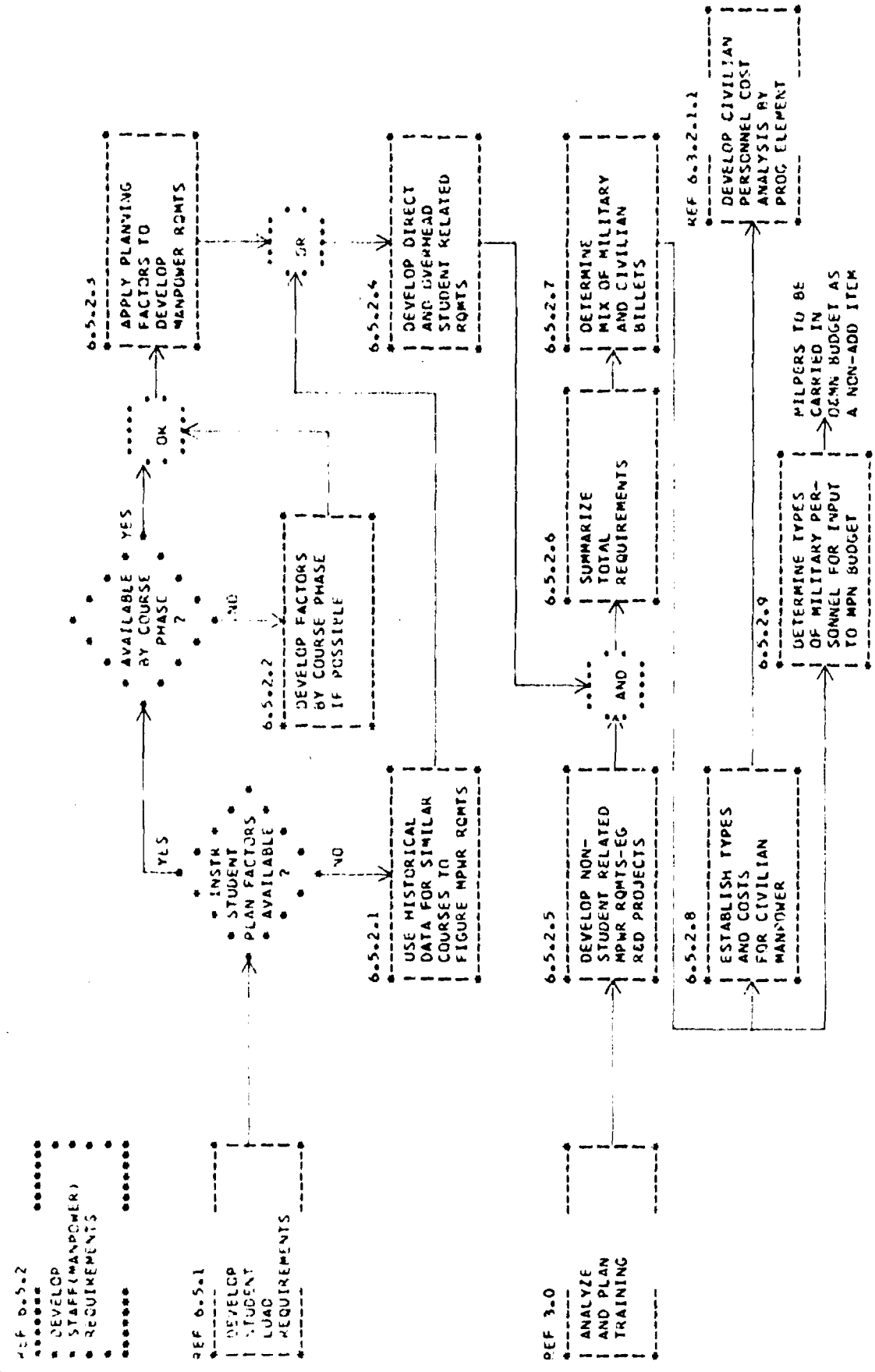

FIGURE VI 6.5.2-DEVELOP STAFF (MANPOWER) REQUIREMENTS

6.6 Monitor, Analyze, Evaluate, and Improve Function of Resource Management

While this subfunction was not observed to be taking place in total within the current training system, it is nevertheless identified within the current system. However, the detail represented in this and the remaining flows for Function 6.0 should be considered appropriate for the resource management function within the idealized training system.

The function is shown as a closed-loop which implies that it is a continuous and repetitive process. It is akin to a continuous system's analysis.

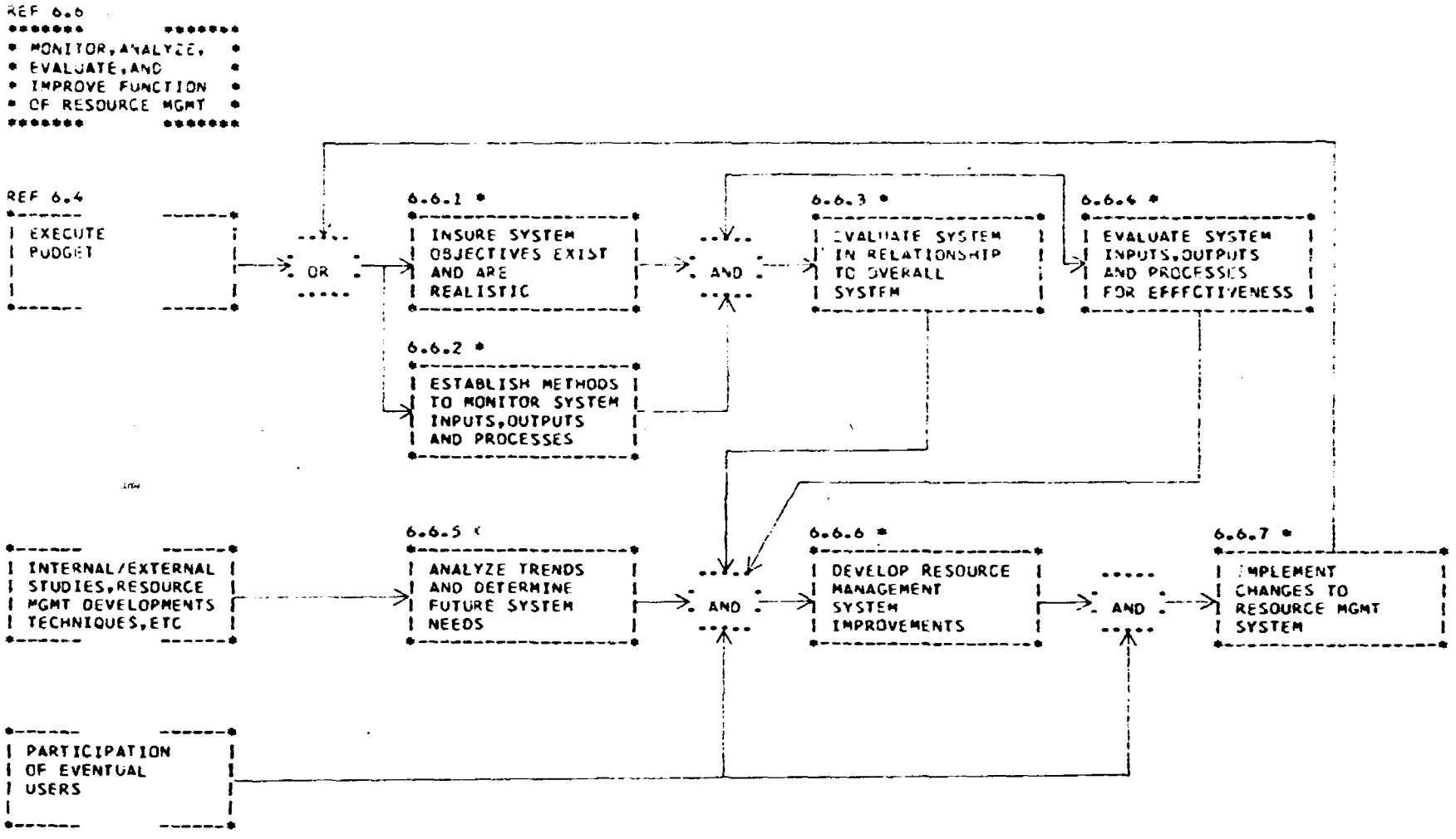

FIGURE VI 6.6-MONITOR, ANALYZE, EVALUATE, AND IMPROVE FUNCTION OF RESOURCE MANAGEMENT

6.6.1 Insure System Objectives Exist and are Realistic

The key to effective evaluation is the existence of written objectives which can be used to communicate with system users and which can be subjected to reasonability tests by the users. This is necessary prior to any assessment of this subsystem in relation to the overall system. If the needs of the user are not satisfied, then the system will be subject to a high rate of error, substantial misuse or disuse, and significant degradation. The goal of a system such as resource management is to improve the decision making process. Obviously, the foregoing system effects cannot benefit the attainment of that goal.

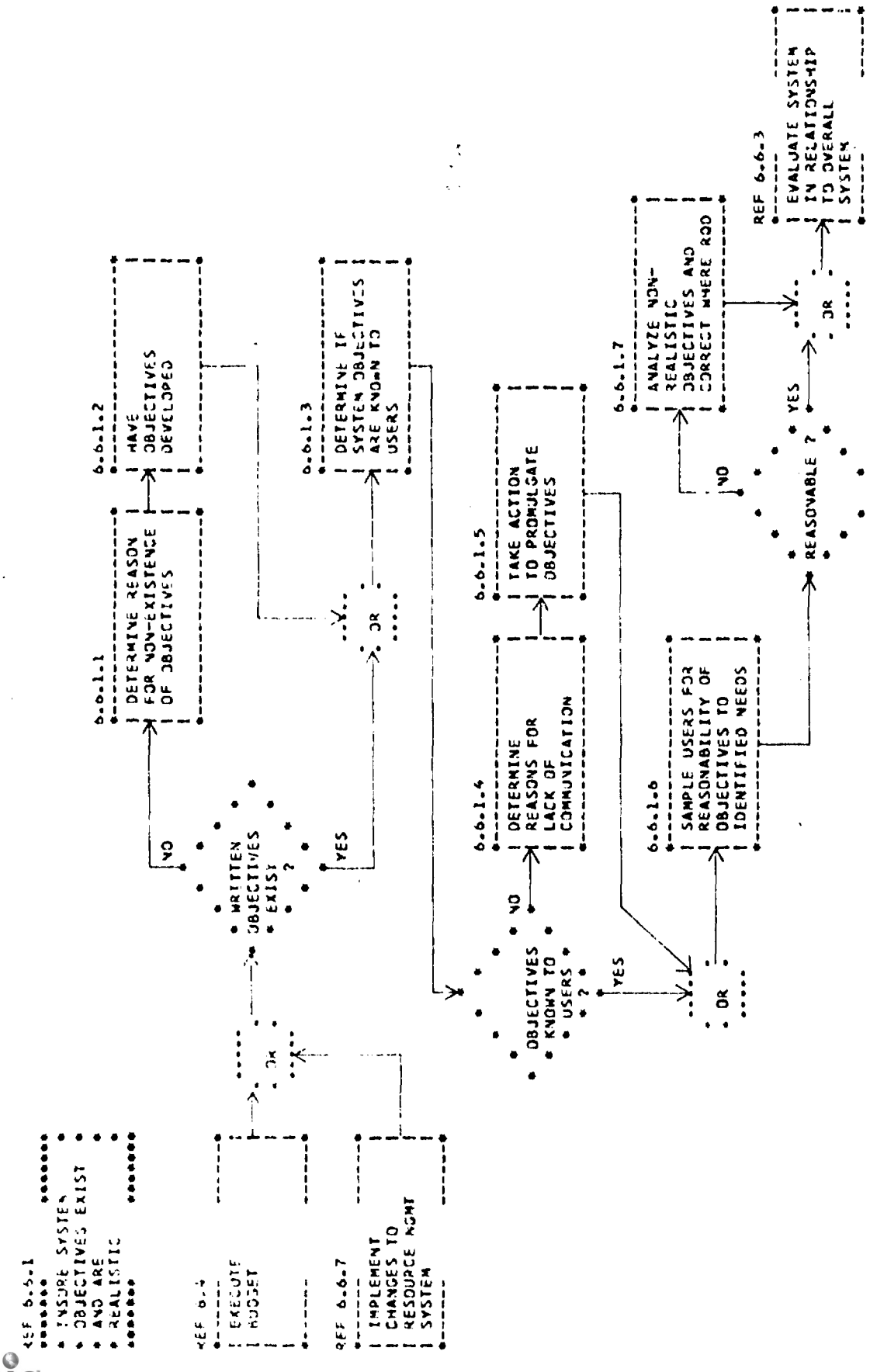

FIGURE VI 6.6.1-INSURE SYSTEM OBJECTIVES EXIST AND ARE REALISTIC

6.6.2 Establish Methods to Monitor System Inputs, Outputs, and Processes

It is important that methods be available to track key attributes of the system. For example, report accuracy and timeliness were observed to be a problem in a number of instances, however, there did not appear to be any pressing management concern since backup systems were available. In the ideal system for managing training resources, quality, reliability/availability, timeliness, and usefulness of data would not only be available to measure the system, but they would also be integral to objective setting and measurement of training managers. Also, before the system effectiveness can be evaluated in terms of its role as a part of the overall resource management system, these data must be available.

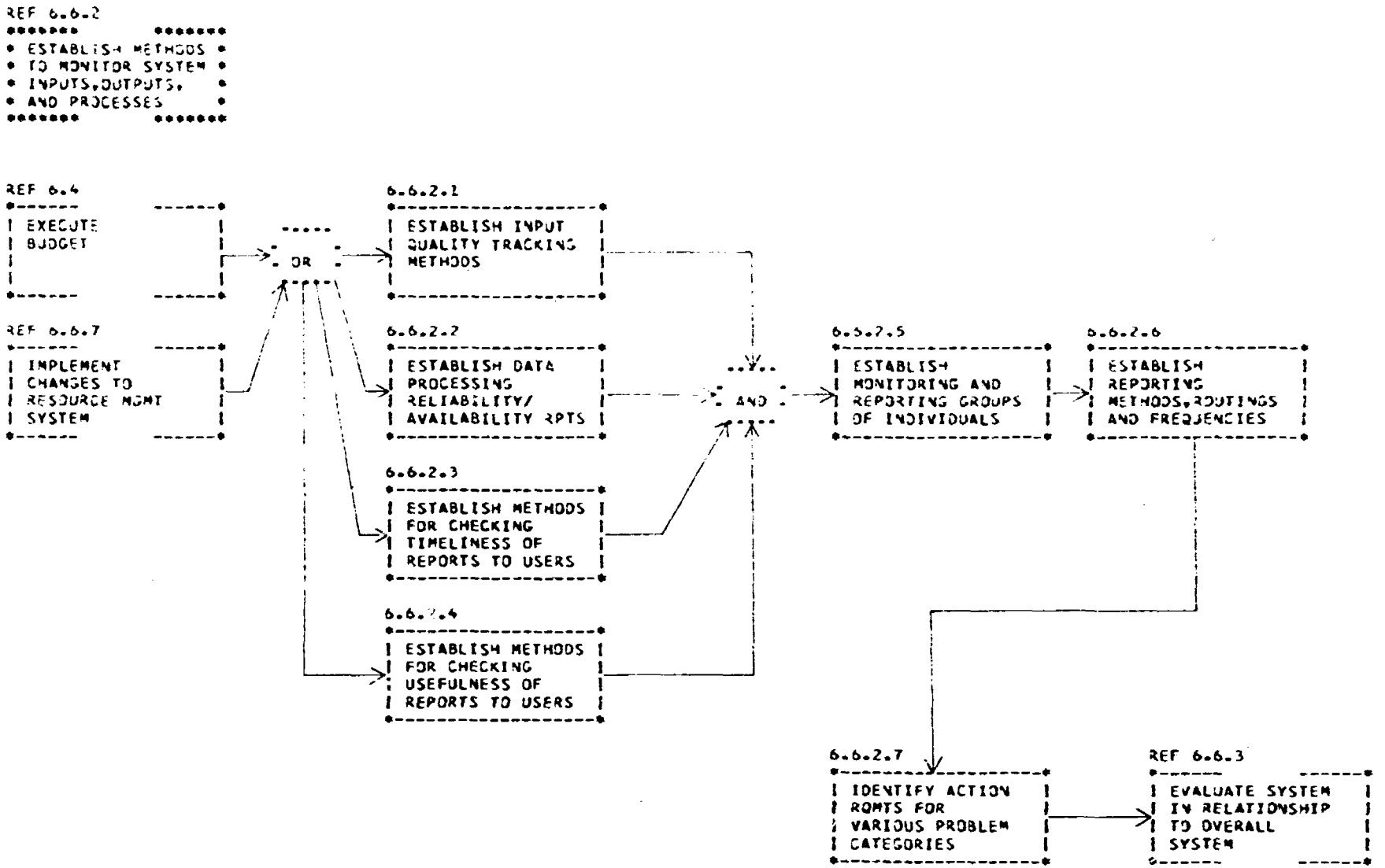

FIGURE VI 6.6.2-ESTABLISH METHODS TO MONITOR SYSTEM INPUTS, OUTPUTS, AND PROCESSES

6.6.3 Evaluate System in Relationship to Overall System

This process involves a verification that system objectives are compatible and that viable interface relationships exist. If this function precedes 6.6.1 or 6.6.2, then there is a good possibility that in introducing compatibility with the higher level system the value to the ultimate user may be diminished. An example of this type of problem was noted in the Resource Management System. In order to make a translation from user needs to the Planning-Programming-Budgeting System (PPBS) used throughout the Department of Defense (DOD), a set of Budget Classification Codes were introduced. This failure to consider compatibility in the original system design appears to have resulted in a patch which tends to confuse the user and which falls short of its intent.

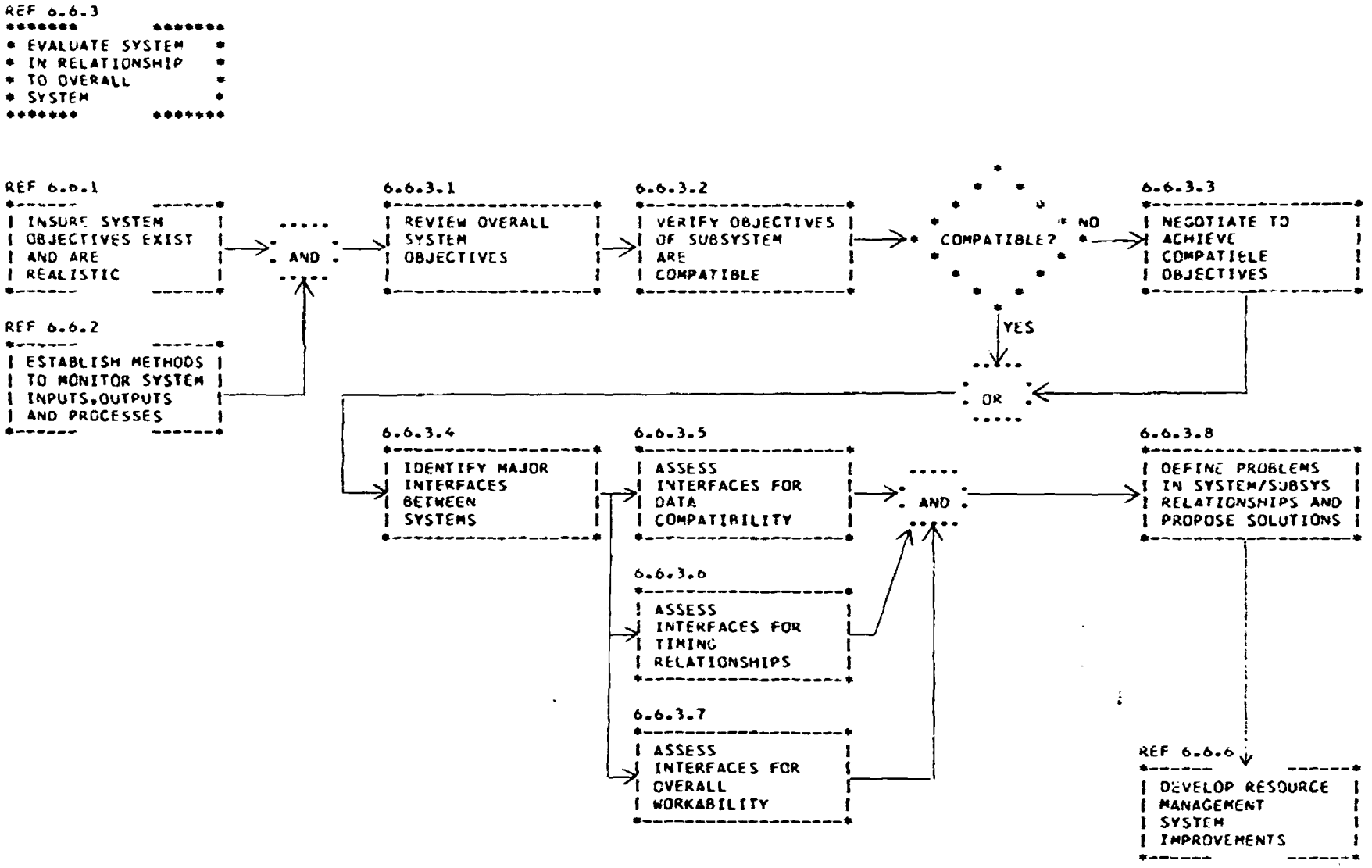

FIGURE VI 6.6.3-EVALUATE SYSTEM IN RELATIONSHIP TO OVERALL SYSTEM

6.6.4 Evaluate System Inputs, Outputs, and Processes for Effectiveness

In order to effectively define system problems and effect improvements, there must be reasonable assurance that system outputs agree with system objectives, that the outputs and objectives agree with user needs, and that both intra-system and inter-system interfaces operate well. The analysis implied in any of these areas could be significant, yet the importance and magnitude of the resource management tasks would appear to prescribe increased effort in analyzing these activities.

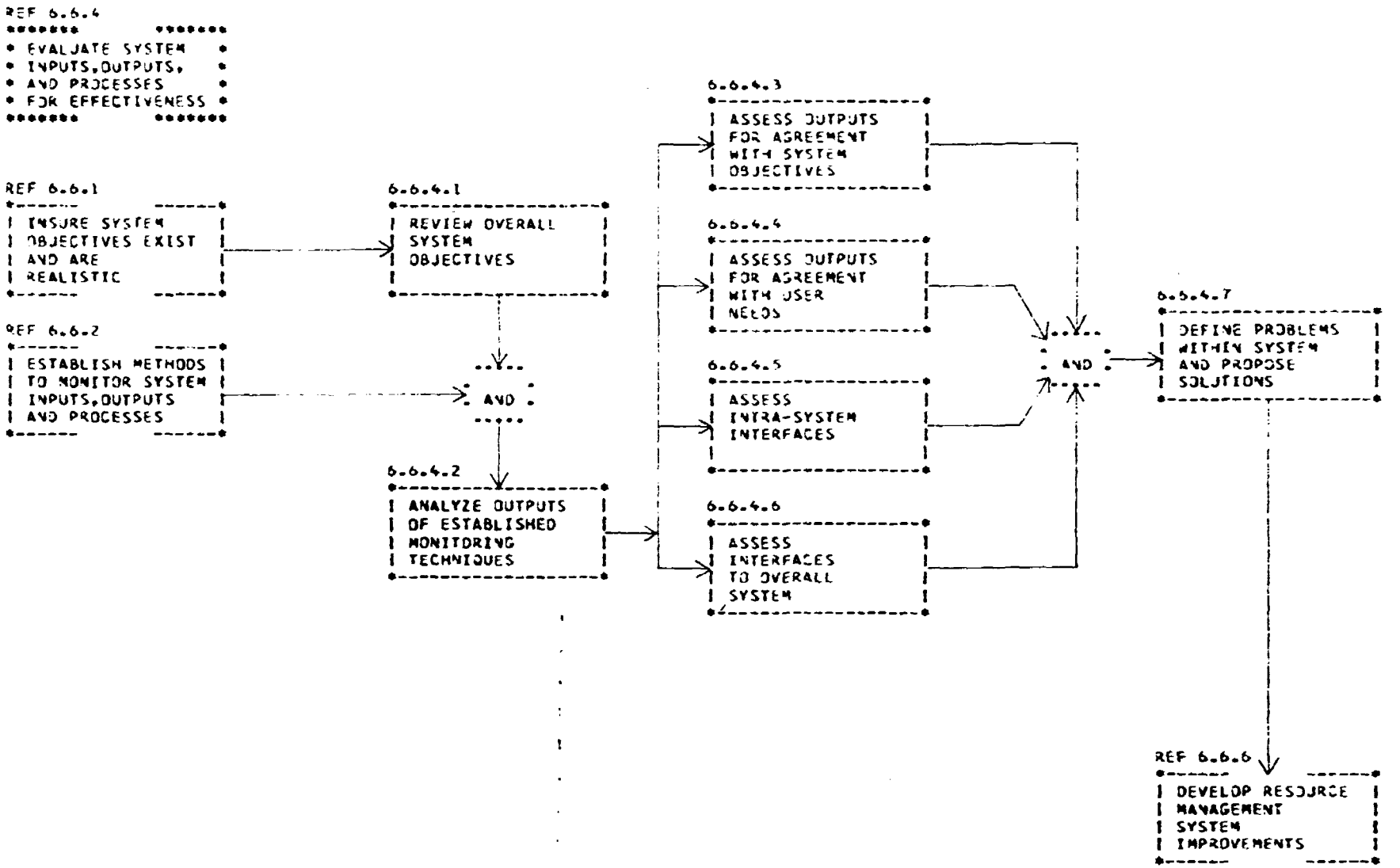

FIGURE VI 6.6.4-EVALUATE SYSTEM INPUTS, OUTPUTS, AND PROCESSES FOR EFFECTIVENESS

6.6.5 Analyze Trends and Determine Future System Needs

This is, in effect, the function of long-range planning which is necessary for the maintenance of a viable system over time. With the exception of recent efforts to consolidate individual activities to solve some of the far-reaching training problems (i.e., the Automated Data System Development Plan), little long-range planning activity, other than mobilization planning, was observed.

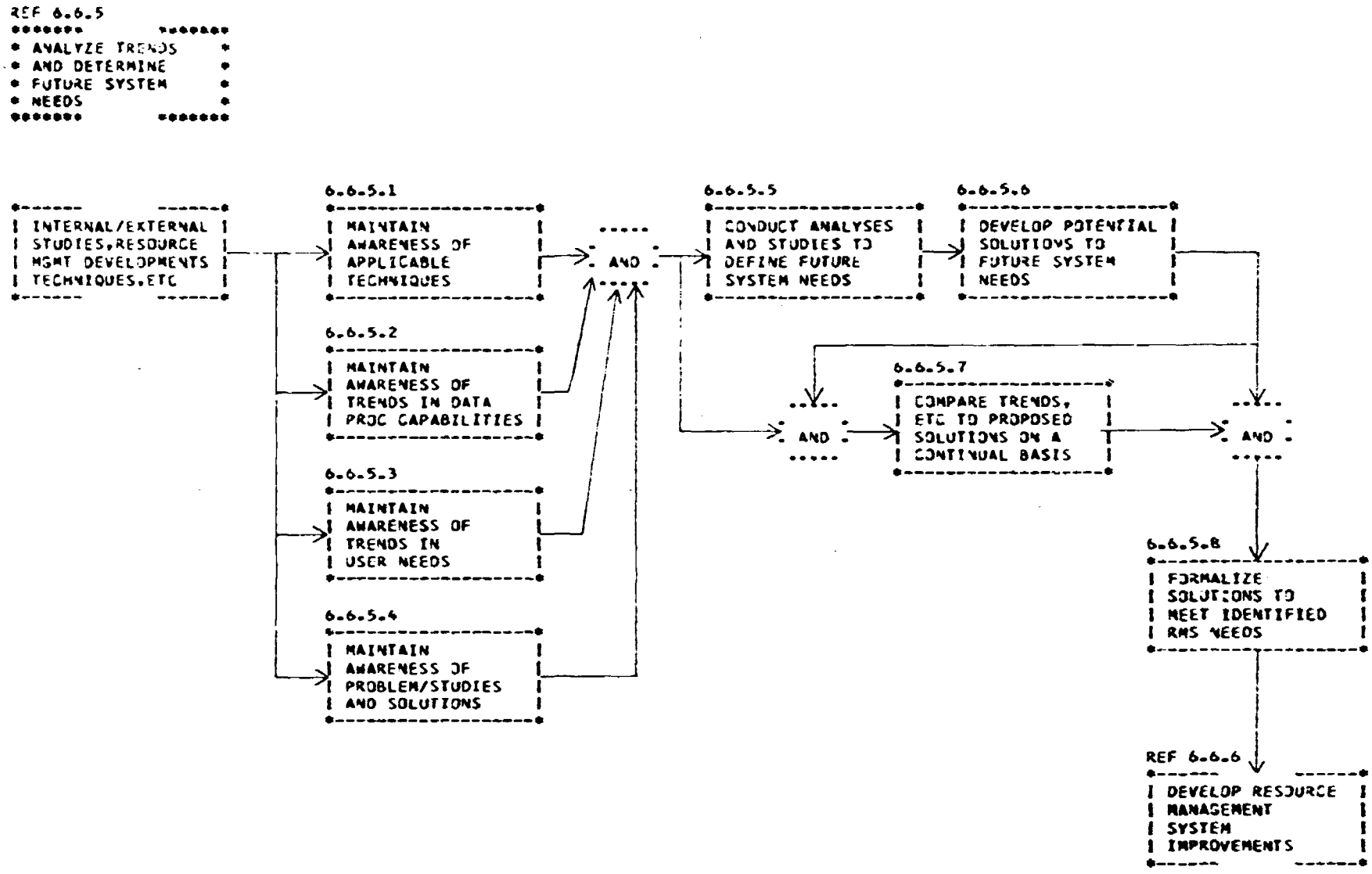

FIGURE VI 6.6.5-ANALYZE TRENDS AND DETERMINE FUTURE SYSTEM NEEDS

6.6.6 Develop Resource Management System Improvements

This flow details the steps in developing improvements to the Resource Management System. The Automated Data System (ADS) Development Plan essentially followed this process, however, considerable separate (and perhaps redundant) efforts took place prior to consolidation as an integrated plan.

As with the obtaining of funds for any training activity, planning should take place far enough in advance so that funding requests enter via the POM cycle.

Another key aspect of this functional element is participation by the eventual users. This will also be the case during the implementation of the improvement as outlined in 6.6.7.

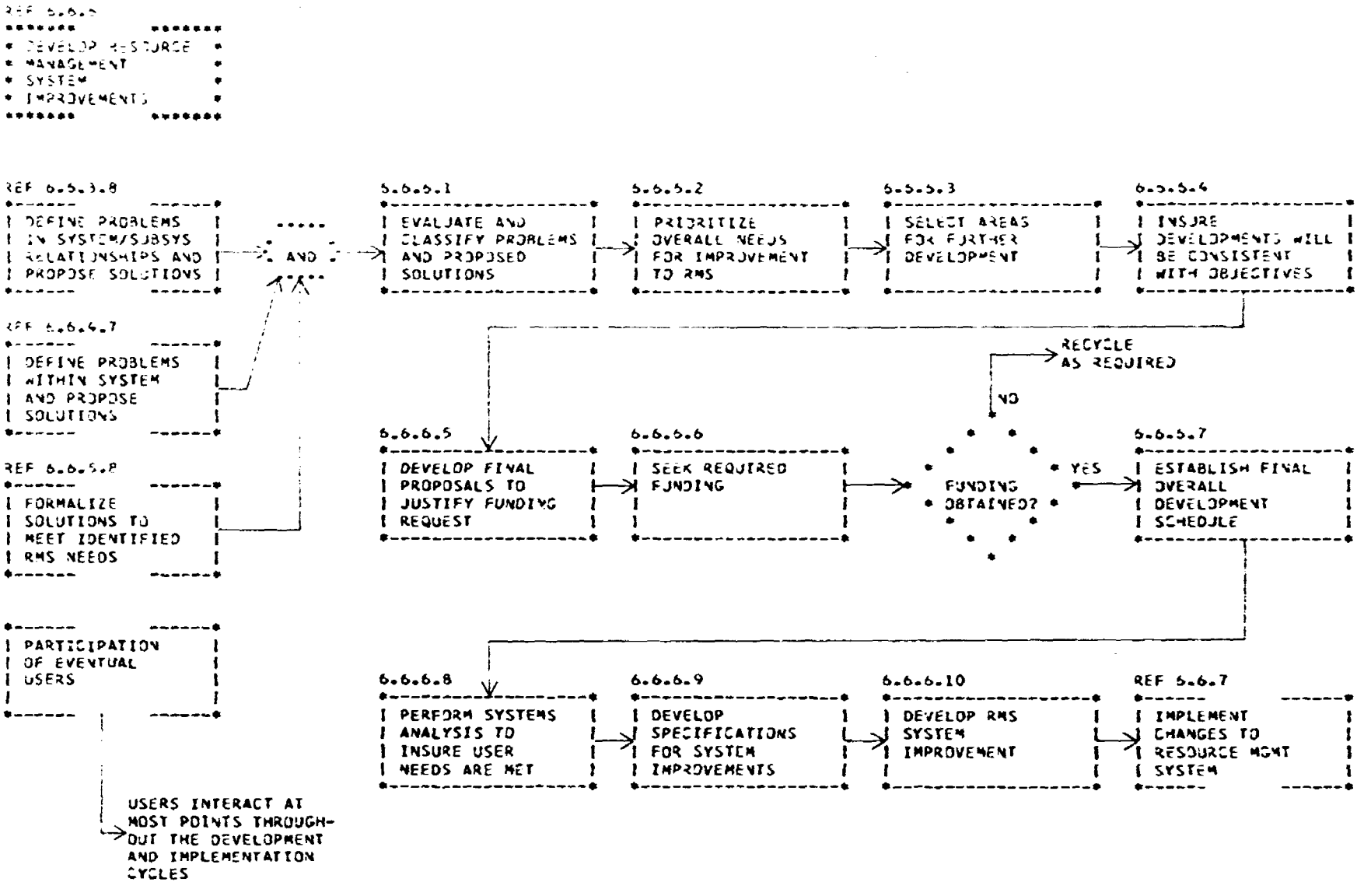

FIGURE VI 6.6.6-DEVELOP RESOURCE MANAGEMENT SYSTEM IMPROVEMENTS

6.6.7 Implement Changes to Resource Management System

The final step of the improvement process is the implementation of the developed change. Two important factors are the selection and the training of user personnel. A number of what appeared to be system improvements were not successfully implemented because the user could not effectively operate them. Obviously, verification, validation, and correction of deficiencies must take place before the user accepts operational responsibility for the change, however, the availability of adequately trained user personnel participating in this process is vital to the ultimate success of the change.

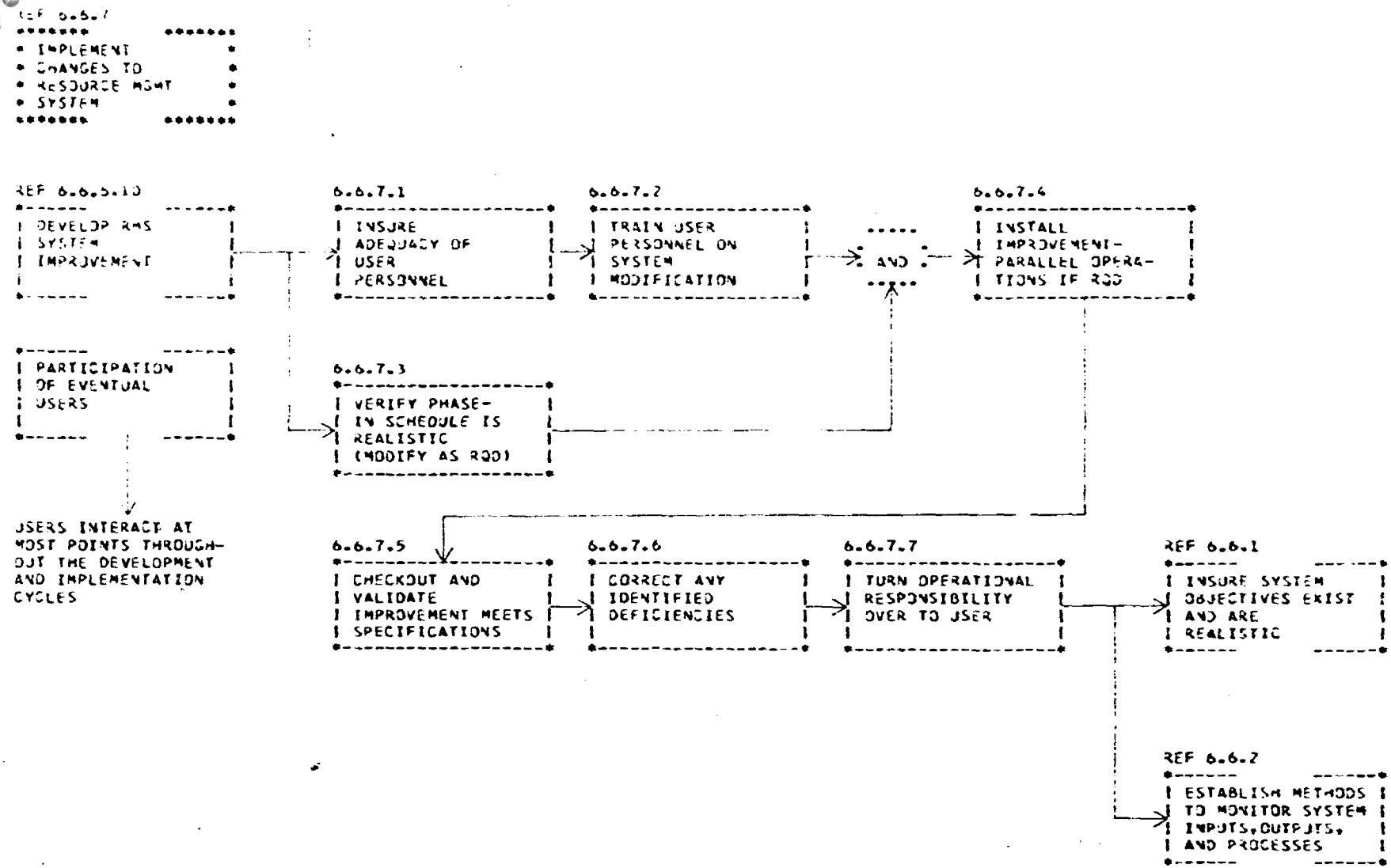

FIGURE VI 6.6.7-IMPLEMENT CHANGES TO RESOURCE MANAGEMENT SYSTEM

d. Summary of Major Technological Gaps and Problem Areas - Function 6.0 Manage Training Resources

A number of problems can be identified from sampling observations throughout the Naval Education and Training System. The importance which should be attached to their correction is so interrelated with, and dependent upon, changes in other functional areas that the order in which they are listed is only an approximation of importance (first being most important).

1) An effective system is needed for prioritizing training requirements so that in the continuing absence of the desired level of training funding, appropriate decisions can be made as to what will be funded within the Resource Management System (RMS).

2) A reduction in the complexity of the RMS within the Navy is needed. The number of ways in which resources are categorized, i.e., by program element, function subportions, budget classification code, element of expense, etc., seems unduly complicated for the most effective application of the system at all levels.

3) Resource management reports need to be made more timely, more accurate, and more relevant to the command level at which they are used. Performance reporting (actual vs plan) should have increased emphasis in terms of automated and timely feedback to reduce the reliance on manual logs and analyses.

4) The interface between the technical and resource subsystem needs strengthening to insure adequate definition of training resource needs during the planning and programming phases.

5) A more well-defined accounting unit is needed for planning, tracking, and controlling training. Present units, such as average under instruction, average on-board, and student man-months, are subject to varying interpretations which preclude an accurate measurement of actual training.

6) Greater and more uniform automatic data processing capability is required to adequately service all command levels. The nonuniformity and the absence of sufficient processing capability, however, is especially noticeable at the lower command levels.

7) Closely related to the preceding items is the need for faster access to resource data. This capability is especially important for detecting and analyzing variance, costing training plans, responding to queries, etc. An effective system for identifying marginal costs is necessary for pricing plan alternatives and fluctuations.

e. Idealized Approaches - Function 6.0 Manage Training Resources

The objective of any resource management system should be to supply management tools which optimize operations in terms of planning and controlling resource usage. Improvements to the present system used within Navy training are proposed to meet this objective. One of the key assumptions which is relevant to the high emphasis on improving the present system is that resources will continue to be highly constrained. Improving the overall cost-effectiveness of operations will be of primary importance to training management. In the context of the preceding, the following direction is proposed.

1) Improve the planning system. A major objective of resource planning is to identify requirements early enough so that resources will be available when needed. This infers an emphasis on longer-range planning and a commitment of management to the process and its implications. The process involves a system of early identification of resources. Effective communication paths and monitoring agents are essential. The implications are that:

a) Early planning must be accomplished

b) Alternatives must be considered

c) Realistic costing must be performed

d) Justification must be improved.

Early planning implies an earlier involvement in training plan definition. This has been covered in the discussion of Function 1.0 Develop Training Requirements and Function 3.0 Analyze and Plan Training.

Realistic costing means the availability of historical costs and planning factors as well as a system for modifying them to the needs of any new costing exercise. The alternatives are most effectively developed if technical planning personnel know not only the technological implications of their

decisions (plans), but also the resource implications. The ability to better define alternative strategies and their related costs is closely associated to the ease by which a plan can be justified.

2) Improve the resource prioritization process. It is reasonable to assume that the available resources will generally be less than the desired resources. This means that resource management continually involves an ordering of the desired activities into some priority sequence. The present system of setting priorities does not appear to permit an effective match between available resources and tasks/activities/programs that will be accomplished with them. The present OPNAVINST 1500.33 - Navy Training Priority System - allows training courses to be ranked according to several parameters. Its application appears to provide an objective basis for elimination of courses, but this is questionable. A better measure would be in terms of some analysis of Fleet needs for specific types of trained individuals.

   Two factors important to the ultimate decision to either reduce or eliminate a training course are:

   a) The number of personnel presently performing the job as compared to the number of personnel actually required.

   b) The general experience level of the personnel performing the job. An assessment of this type would require a much better communication path with the Fleets and with NAVPERS. This, however, not only benefits the prioritization process, but it assists the planning and control (establishment of realistic and manageable quotas) processes as well.

3) Improve the resource control system. An effective resource control system, among others, requires two things: (1) a sound understanding of the present rate and level of expenditure, and (2) the flexibility to redistribute resources to get the most out of those that are available. Neither of these appears to be accomplished in an optimal manner today. The reports intended to indicate rate of expenditure (NAVCOMPT 7000-9 Performance Statement, as an example) are not timely enough and are based on a linear (same amount each period), rather than on any monthly expenditure plan. As a result, substantial manual effort

is devoted to keeping the books. The reports used to accomplish this are basic accounting documents which should be used for analysis once a problem has been identified through a higher level of reporting.

Ideally, a sound plan should identify the level and timing of resources as close as possible to what is expected. The actual usage of resources should be matched to this plan and the variance identified as a result. Also, the availability of the reports should be such that time exists for corrective action to be taken, if necessary.

It is assumed that the use of certain resources will continue to be tightly governed by law, therefore, the optimal degree of flexibility required for the most efficient management of resources may not be achievable. Even with this as a constraint, desirable rearrangements of resources should still be made. Flexibility is closely related to the ability to assign realistic priorities. Only then can a higher level command make an intelligent determination that resources should be moved from one area to another. It is recommended, however, that more timely and more meaningful reporting be instituted, especially at the lower echelons of command.

4) General Areas

a) Personnel. Ideally, all personnel involved in resource management would have a fairly high level of skill in financial planning and analysis. While a number of very competent individuals were observed in the performance of this activity, a wide variation was found.

This professional activity should receive more emphasis in terms of the personnel selected and of the training they should receive in order to perform their jobs more effectively.

b) Paperwork. It appears that a high percentage of the manual activity devoted to preparing basic documents could be more fruitfully applied in the analysis and solution of resource management problems. This, of course, implies either the elimination or the automation of much of it. Some of both appears desirable.

c) PPBS cycle. This is sometimes referred to as the "never ending" budget cycle. There appears to be an imbalance between the amount of time devoted to pre-

paring programming and budget documents as compared to the time applied to analyzing resources usage. It would seem that the three resource input cycles (Programming, Estimating and Apportioning), represent an excessive amount of resource input effort. The consolidation of the estimate and apportionment cycles should be considered, at least at functional commands and below.

d Changing requirements. An important aspect of resource management is the ability to rapidly assess the impact of changing requirements. Several things are implied in this capability: (1) marginal costing methods are available to determine incremental resource needs, (2) the major constraints are well identified, and (3) a system exists for performing the logic and computations rapidly. There are a number of paperwork systems available or under development which attack this problem to a degree. Ideally, however, more optimized solutions are attainable through sophisticated computer models which can treat the more complex interrelationships among variables and the costs which vary as step functions.

e Flexible budgeting. Akin to the marginal costing capability mentioned above, is the ability to maintain a flexible budget. It is assumed that there will be increased scrutiny of resources expended in comparison to actual output as opposed to the initial plan. A knowledge of the variable costs associated with any change in output (the primary output of training would be students, student days, or average on board) is necessary to adequately match actual output and resource usage. Increasing congressional interest in student output may raise this as an issue. At any rate, in an ideal situation, marginal costs should be readily determinable and available to planners and managers.

7. Function 7.0 Perform Training Research

a. Definition

Training research includes all activities concerned with the determination of objective facts/knowledge relating to the training/learning/evaluative process. Such activities are not confined to formalized experimental situations but include field studies, systematic analyses, statistical analyses (other than routine enumerations), exploratory development, advanced development, and engineering development. Thus the concept of research is broadened to cover those activities designed to solve particular problems by means of objective methods, as well as to develop a base of knowledge and facts.

The primary document for the research program in CNET is CNTINST 3910.1 (10 December 1971) - "Training Research Program." This establishes policy and describes the organization and requirements to meet research policy needs.

b. Description

The Perform Training Research function is described through an outline which contains all of the functional elements presented in the functional flows, and in addition through an overall functional flow, Figure VI 7.0 - Perform Training Research.

	Page
7.0 Perform Training Research	347
7.1 Develop Research Requirements	350
7.1.1 Request Research Requirements	
7.1.2 Originate Research Requirements	
7.1.3 Coordinate Research Requirements	
7.1.4 Eliminate Obvious Duplicates	
N7.1A Develop Research Requirements (Idealized) . .	352
N7.1.1A Survey Each Function/Subfunction of NETS	
N7.1.2A Determine Significant Problem Areas	
N7.1.3A Survey Technical Literature	
N7.1.4A Survey Other Applications - Military, Industry, and Education	
N7.1.5A Evaluate Implementation Requirements	

Page

7.2 Analyze Research Requirements 354
7.2.1 Group into Related Problem Areas
7.2.2 Develop Logical Relationships Within Groups
7.2.3 Develop Priority of Problem Groups
7.2.4 Select Highest Priority Problems
7.3 Develop Research Plans 356
7.3.1 Compare Priority Areas to Current GOR's, SOR's, ADO's
7.3.2 Indicate Needs to ONR
7.3.3 Monitor Status of the Request
7.3.4 Prepare Detailed Proposal Justification
7.3.5 Request NAVOP 098 Budget
7.3.6 Task Proper Research Agency
7.3.7 Subcontract Research Project
7.4 Perform Research 358
7.4.1 Define Problem
7.4.2 Develop Hypothesis and Design the Study
7.4.3 Develop Study Approach
7.4.4 Determine Required Resources
7.4.5 Outline Analytic Approach-Detailed Plan
7.4.6 Develop Schedule and Milestones
7.4.7 Acquire Resources
7.4.8 Initiate Pilot Study
7.4.9 Revise Study Approach
7.4.10 Initiate Data Gathering
7.4.11 Complete Data Gathering
7.4.12 Analyze Data
7.4.13 Develop Initial Conclusions and Recommendations
7.4.14 Write Study Report

N7.5A Apply Research Findings (Idealized) 360
N7.5.1A Determine if Results Achieve the Requirement
N7.5.2A Determine if Current Method Achieves the Requirement
N7.5.3A Determine Implementation Requirements
N7.5.4A Compare Effectiveness - Current and New Methods
N7.5.5A Determine Cost - Current Method
N7.5.6A Determine Implementation Costs - New Method
N7.5.7A Determine Costs/Effectiveness - Current and New Methods
N7.5.8A Select the Most Effective Method Per Cost
N7.5.9A Develop Implementation Plan
N7.5.10A Prepare Presentations to Appropriate Commands
N7.5.11A Prepare Proposals to Evaluate/Support Implementation

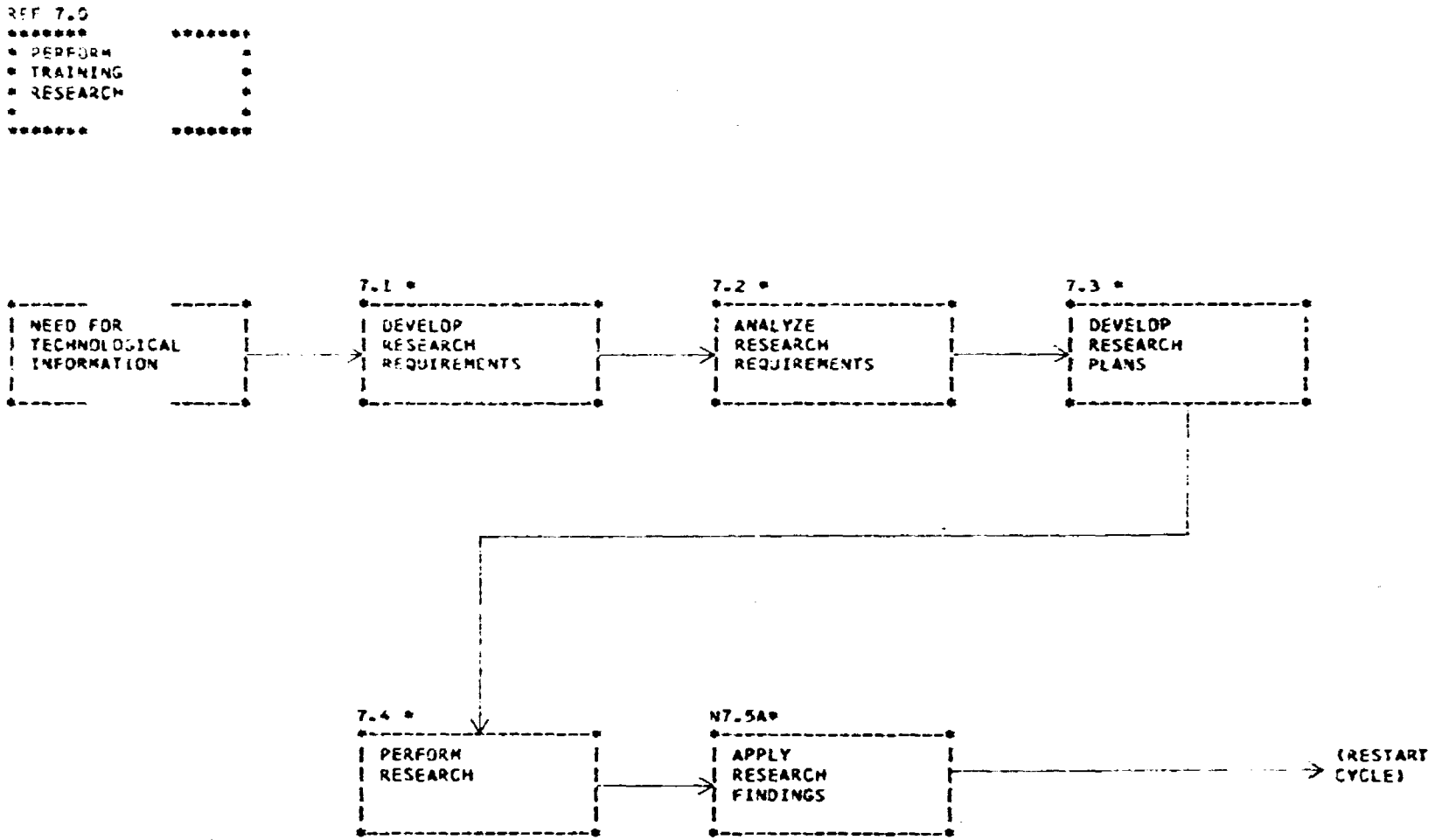

FIGURE VI 7.0-PERFORM TRAINING RESEARCH

c. Functional Description of NETS - Function 7.0 Perform Training Research

A general description of this function was presented in the outline and top-level flow of the preceding section. Further detail is shown in this section through a series of flows which expand key subfunctions. In addition to notes within the flows that elaborate on significant points, a general discussion of the flow is contained on the facing page.

7.1 Develop Research Requirements

This overall flow shows the major subfunctions for the development of research requirements as it is done currently.

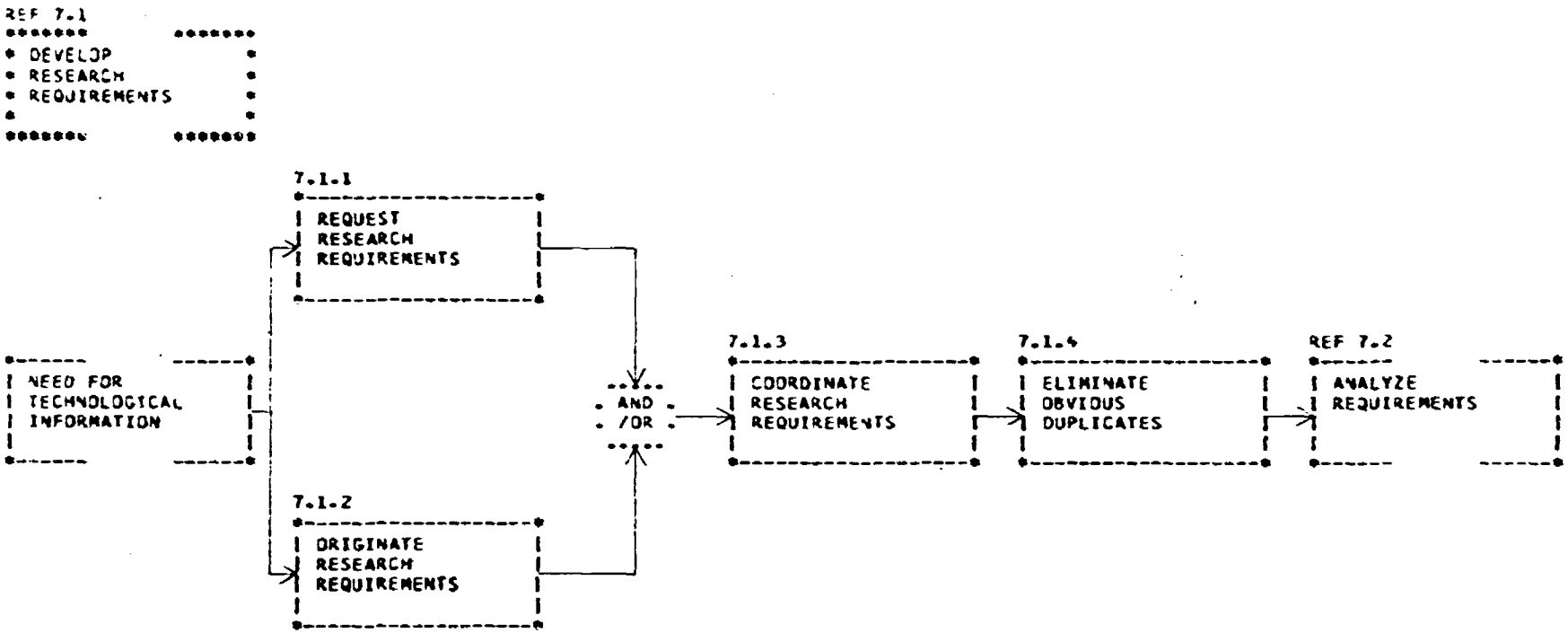

FIGURE VI 7.1-DEVELOP RESEARCH REQUIREMENTS

N7.1A Develop Research Requirements (Idealized)

This is an idealized approach to developing research requirements. The major difference is in the systematic approach. The kind of analysis required will, of necessity, involve potential users. Such involvement will tend to assure that appropriate research findings will be utilized.

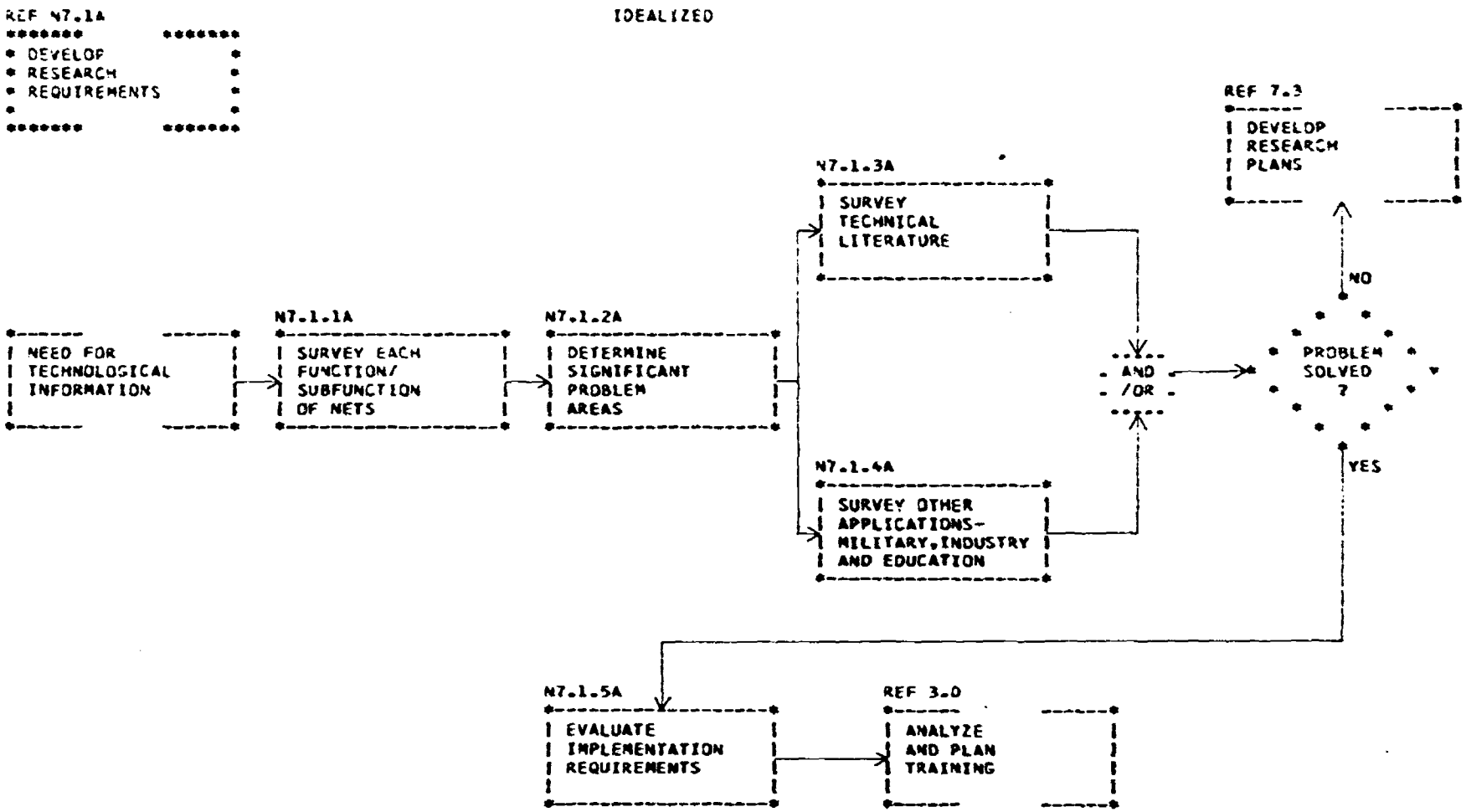

FIGURE VI N7.1A-DEVELOP RESEARCH REQUIREMENTS (IDEALIZED)

7.2 Analyze Research Requirements

This flow further amplifies the analysis of data obtained as a result of an initial systematic investigation of requirements.

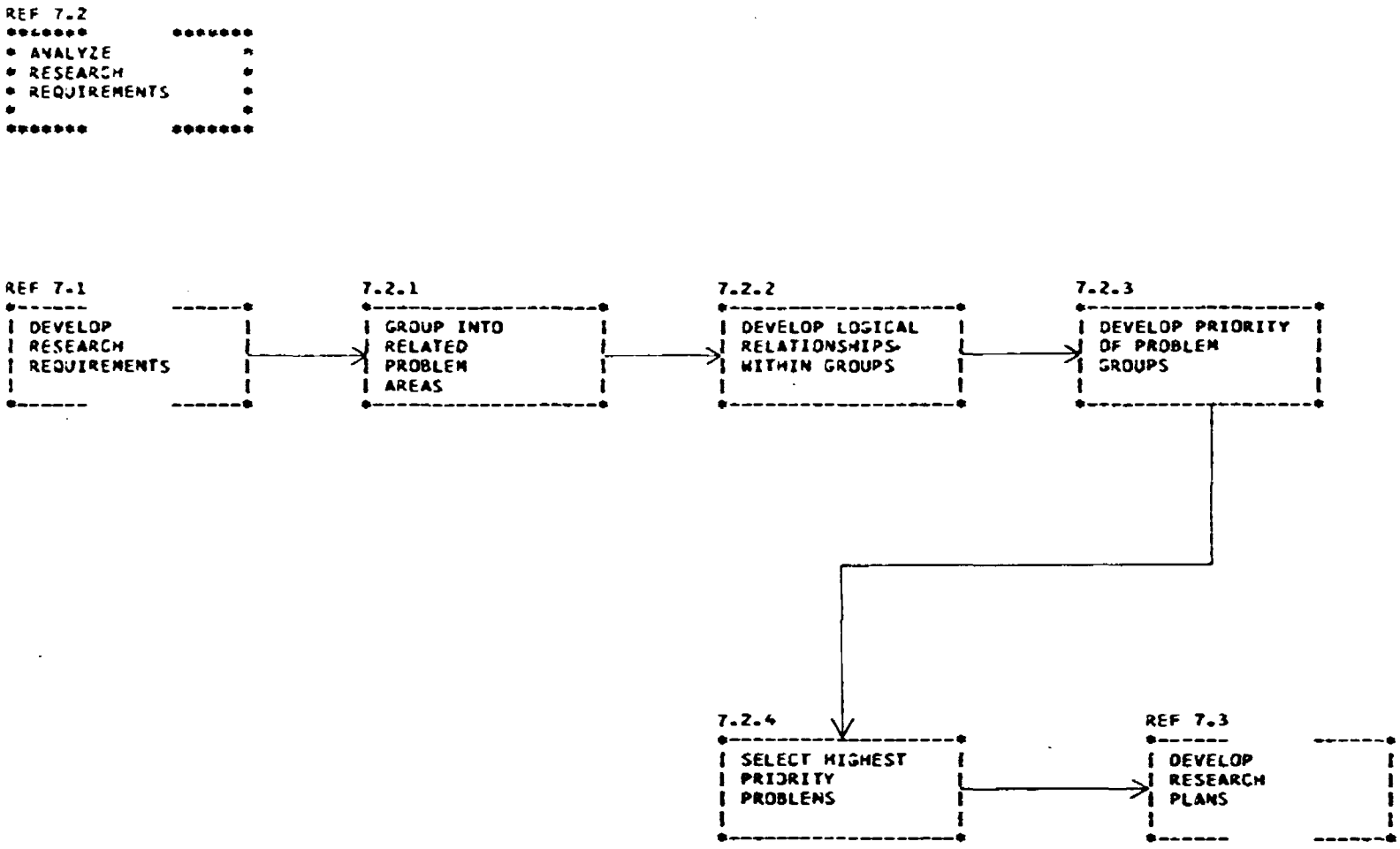

FIGURE VI 7.2-ANALYZE RESEARCH REQUIREMENTS

7.3 Develop Research Plans

This flow shows the general sequence of events and decisions currently made to originate a research project.

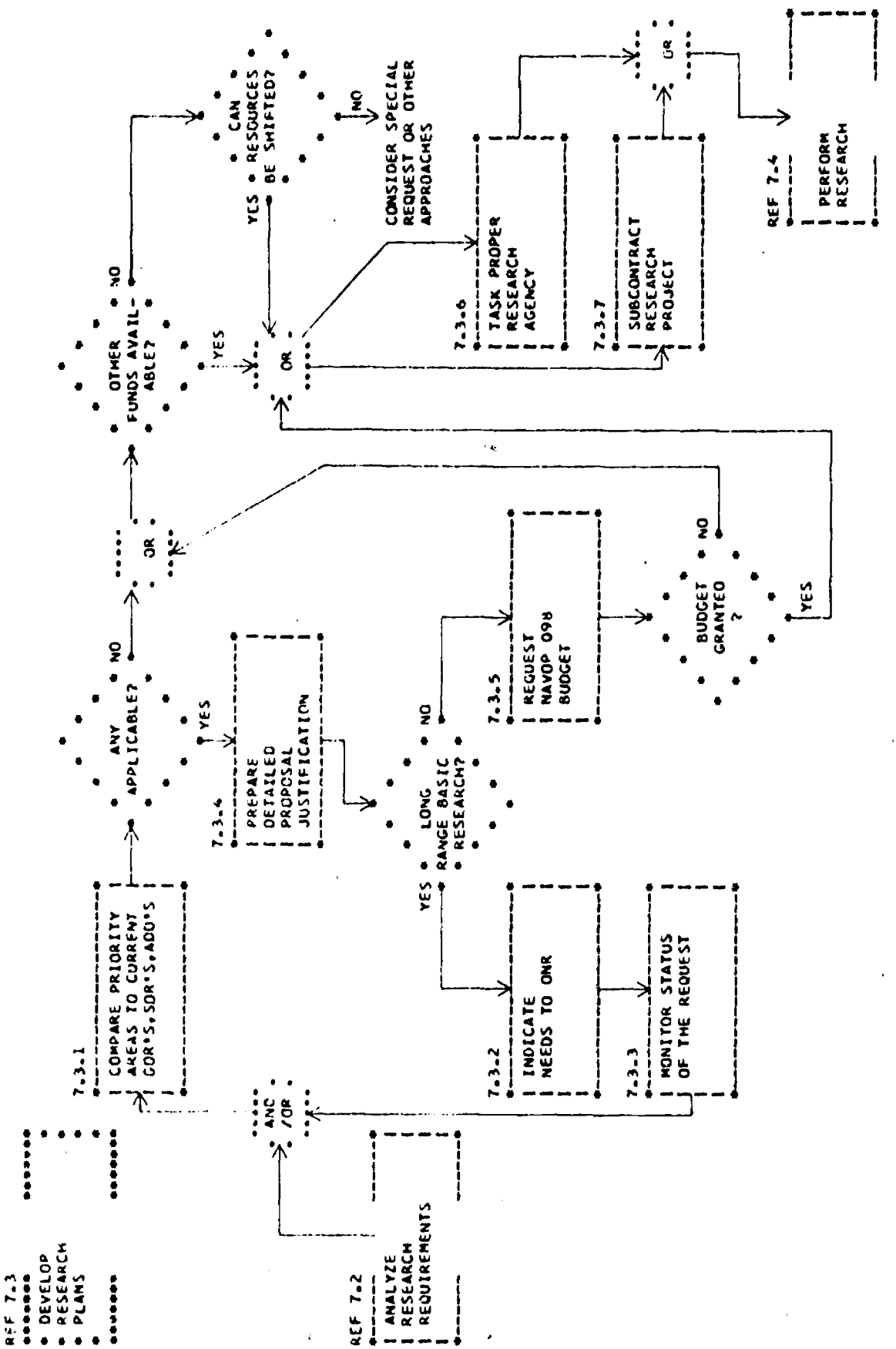

FIGURE VI 7.3-DEVELOP RESEARCH PLANS

7.4 Perform Research

The steps shown are the classical ones needed to perform research. While a decision is required as to whether or not a pilot study is needed, every effort should be made to perform such a study initially. The approach shown here is the professional one followed by naval research organizations. Some of the studies performed by non-research groups differ widely from this sequence. Results obtained from other than rigorous methodology are at best misleading and at worst - worthless.

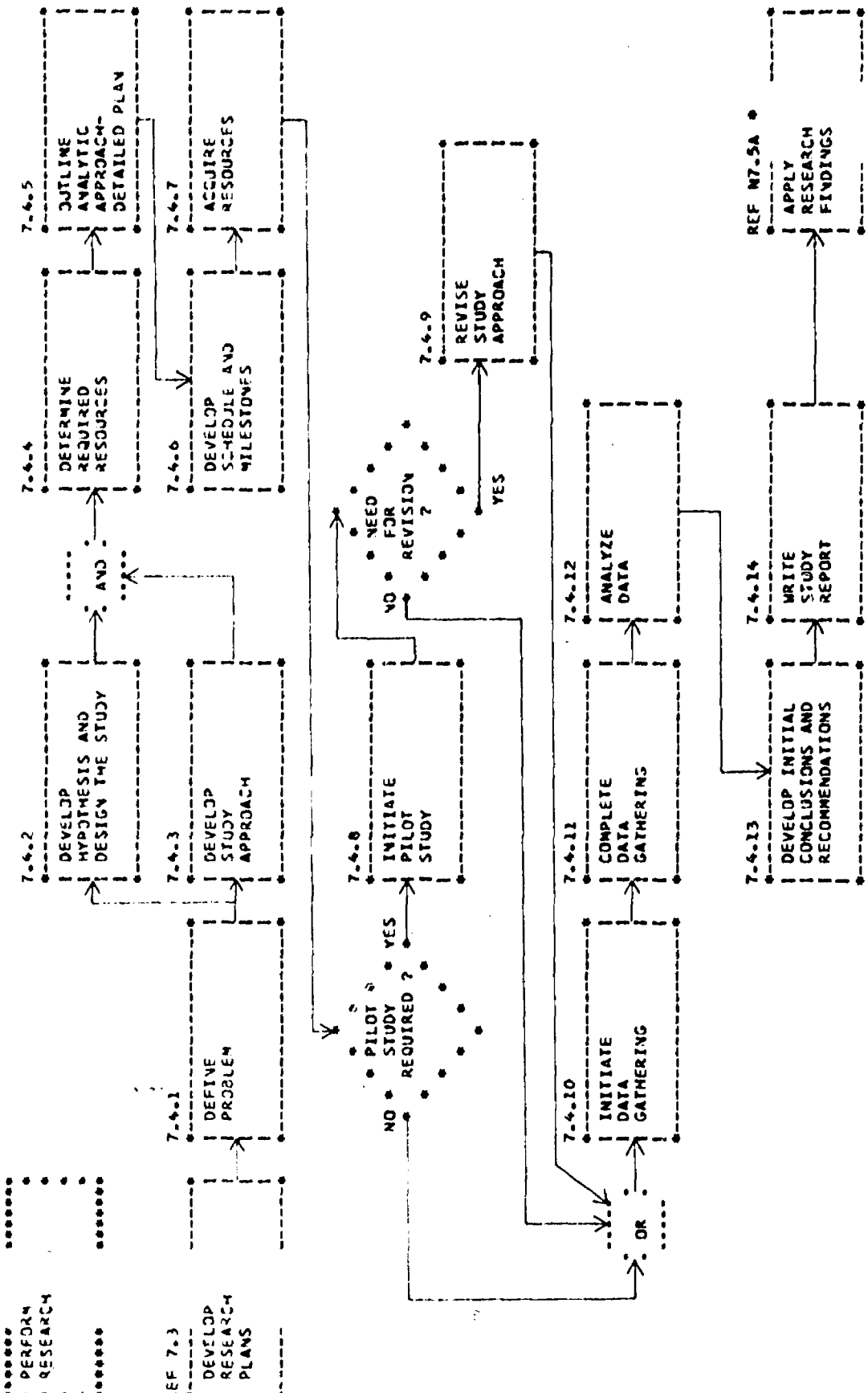

FIGURE VI 7.4-PERFORM RESEARCH

N7.5A Apply Research Findings (Idealized)

This is an idealized approach to the implementation of research findings. Currently, application is extremely weak. The point stressed here is a determination as to whether or not the minimal requirements (objectives) of the training have been achieved. If both old and new methods achieve this goal, a cost-effectiveness comparison must be made. Effectiveness must be considered as well as cost. Once the method is "validated" in this manner, a specific plan for implementation must be developed and presented to the appropriate group(s). The best equipped groups for such plans/presentations would be the research organization that has conducted the study.

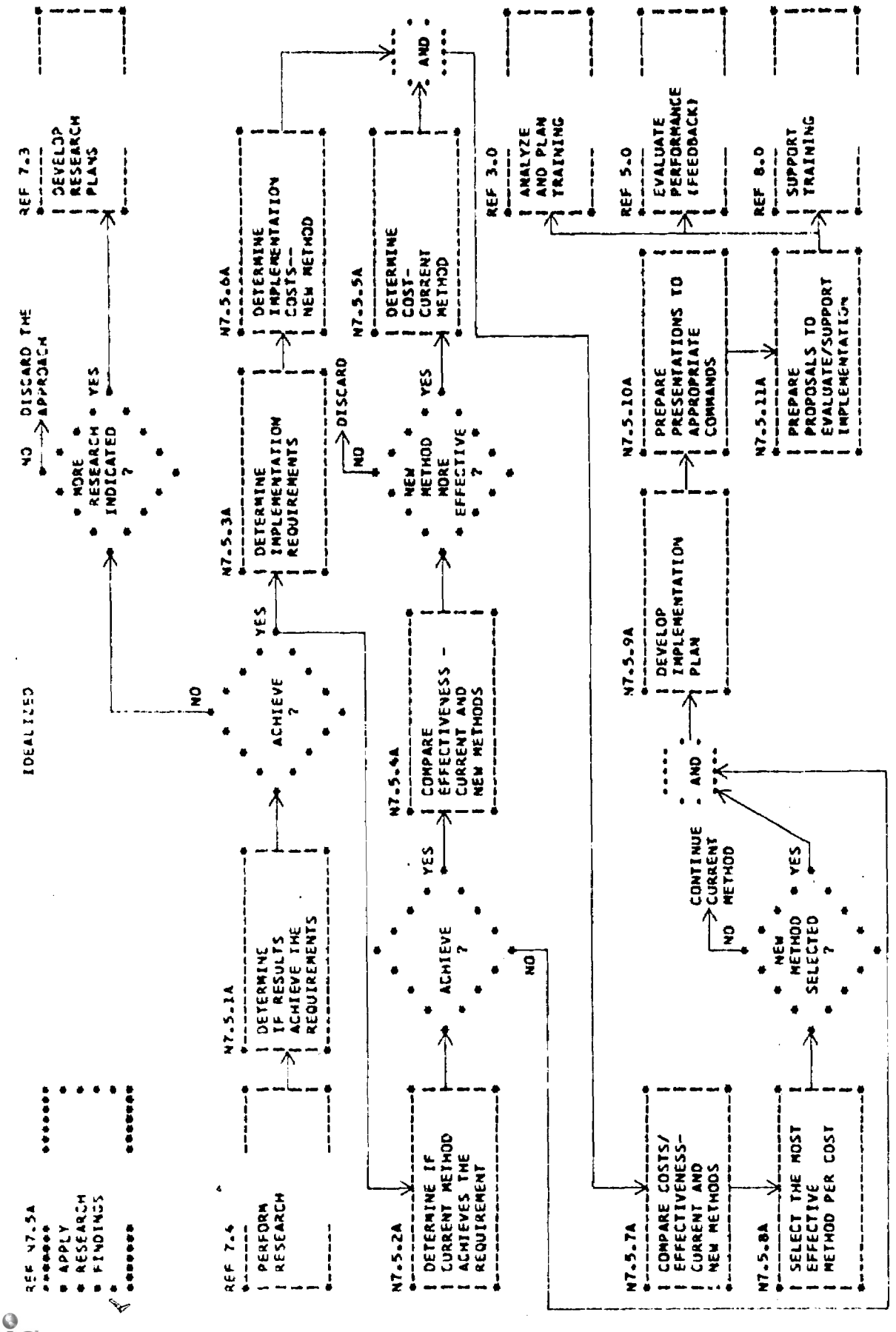

FIGURE VI N7.5A APPLY RESEARCH FINDINGS (IDEALIZED)

d. Summary of Major Technological Gaps and Problem Areas - Function 7.0 Perform Training Research

1) There is no apparent over-all research plan or approach in the training system. What does appear is a series of isolated and unrelated efforts. As a result, there is duplication or great over-lap within the Navy and within services.

2) There is no central research coordination of on-going studies for establishing resource priorities, systematic development of needs, or dissemination of study results/implications.

3) The utilization of research/study results is very spotty. Actually, few such instances were found. The norm is for the results to lie fallow on a shelf, soon to be forgotten.

e. Idealized Approaches - Function 7.0 Perform Training Research

The rationale for idealized approaches for training research stems from the major problems pointed out in the previous section (d.). The basic requirements are for systematic development of research needs, coordination and control of research efforts, and a method of implementing worthy findings.

1) Most of the research that is currently conducted seems to be in response to specific requests. Such requests emerge from various conferences of training commanders, the ideas of a commanding officer or a staff officer, or the request of other individuals in a position to be heard. The "needs" that emerge are often not well defined, may not be real needs, and may be complete duplicates of other stated needs.

In other instances, the research groups come up with their own ideas of what should be worked on. The danger here is that the potential users are not aware of the ongoing research efforts and/or don't agree that the "problem" is a significant one.

Ideally, there must be an initial systematic development of knowledge concerning problem areas and technological gaps. The present study is one aspect of such an investigation, but since it concentrated on describing the Naval Education and Training System as a totality, such gaps were not the principal focus. A detailed delineation of problem areas and a specification of priority are essential for training research. The performing of all research within such a framework is essential if effective and useful results are to be attained.

Briefing of potential sponsors must cover, as a minimum, the goals of the study and the possible benefits. The sponsor should commit himself to the implementation of viable results. "Viable" means that the implementation will yield increased cost-effectiveness as compared to the current approach.

An idealized approach for determining if a research output is viable is shown in Figure VI N7.5A. It is essential that the nature of the need is specified. If the current method (or the "new" method) does not achieve the objective it is supposed to perform, the method must be discarded, regardless of cost. If both methods are effective, a method of evaluating effectiveness must be devised. This may be done by rating, by establishing a percentage of effectiveness, or by any other appropriate method. Once the degree of effectiveness is established, the price of each must be developed. Then a comparison of cost per "unit of effectiveness" may be established. It is important to understand that the cheapest methods may be more costly in the long run if the effectiveness is low. If the effectiveness is zero, even a very low price becomes prohibitively expensive.

Note that the functional flows do not specify which organizations perform functions or subfunctions. However, in the instance of applying research findings, it would be desirable for the research organization to be directly involved in the foregoing analysis. In addition, it is the best qualified to present the requirements for implementation as well as to perform the evaluation and initial support for implementation.

4) While the kinds of problems and variables need systematization as pointed out previously, the broad areas upon which to focus training research in the idealized context are:

Effectiveness Measures
Task Analytic Approaches
Feedback
Performance Aids
Training Device Application
On-Board Training
Individualized Instruction
CAI/CMI
Counseling

Comments on most of these areas are to be found in the body of the discussions for specific functions, particularly Functions 4.0 and 5.0.

8. Function 8.0 Support Training

a. Definition

This function covers all activities directly relating to the support of training operations. In addition to supporting activities, there is also the development of: training packages for On-Board Training (OBT) and non-resident instruction, as well as new training equipments. A significant subfunction is the procurement and maintenance of training devices, particularly complex simulators/trainers.

While the support function is concentrated in the organization of the Chief of Naval Training Support, various subfunctions and tasks are conducted at all levels within the total training system. In addition, all levels are participants in this function through generating requirements, as users, and as significant sources of feedback on the quality of training support.

b. Description

The Support Training function is described through an outline which contains all of the functional elements presented in the functional flows, and in addition through an overall functional flow, Figure VI 8.0 - Support Training.

Page

8.0 Support Training 367
8.1 Develop/Acquire/Support Training Material 370
8.1.1 Receive and Analyze Requirements
8.1.2 Determine Characteristics
8.1.3 Develop Training Equipment
8.1.4 Procure Training Equipment
8.1.5 Maintain Training Equipment

N8.1.1A Receive and Analyze Requirements (Idealized) . 372
N8.1.1.1A Determine Specific Problem
N8.1.1.2A Verify Need
N8.1.1.3A Determine Potential Approaches
N8.1.1.4A Estimate Resource Needs and Availability
N8.1.1.5A Select Possible Approach Within Resources
N8.1.1.6A Estimate General Characteristics
N8.1.1.7A Evaluate Estimates vs Needs
N8.1.1.8A Determine Preliminary Concepts

Page

8.2 Support Training/Education Programs 374
8.2.1 Support Non-Resident Instruction Program. . . . 376
8.2.1.1 Develop Instruction Package
8.2.1.2 Disseminate Study Materials
8.2.1.3 Evaluate Student Responses
8.2.1.4 Develop Student Record Data
8.2.2 Support On-Board Training (OBT) 378
8.2.2.1 Receive and Analyze Requirements for OBT
8.2.2.2 Develop On-Board Training Packages
8.2.2.3 Disseminate On-Board Training Packages
N8.2.2.4A Evaluate OBT Packages
8.2.3 Support Education Programs 380
8.2.3.1 Develop/Support Policy for Education Programs
8.2.3.2 Develop Education Programs
8.2.3.3 Administer Education Programs 382
8.2.3.3.1 Establish Prerequisites
8.2.3.3.2 Develop Additional Resources
8.2.3.3.3 Establish Quotas
8.2.3.3.4 Administer Students
8.2.4 Support Library Programs 384
8.2.4.1 Determine Needs
8.2.4.2 Procure Needed Books/Supplies
8.2.4.3 Disseminate Books/Supplies
8.3 Administer Advancement in Rate Testing Program . . 386
8.3.1 Develop Examinations 388
8.3.1.1 Analyze "Qualifications for Advancement in Rating"
8.3.1.2 Write Test Outline
8.3.1.3 Write Test Items
8.3.1.4 Compile Test Battery
8.3.1.5 Administer Test
8.3.1.6 Analyze Items
8.3.2 Develop Advancement in Rate Study Bibliography 390
8.3.2.1 Compile Pertinent References
8.3.2.2 Determine Applicable Sections of Each Reference
8.3.2.3 Maintain Current References for Each Succeeding Examination
8.3.3 Develop Test Statistical Data 392
8.3.3.1 Determine Characteristics of Test Takers by Test Performance
8.3.3.2 Perform Collusion Checks
8.3.3.3 Perform Other Pertinent Analyses

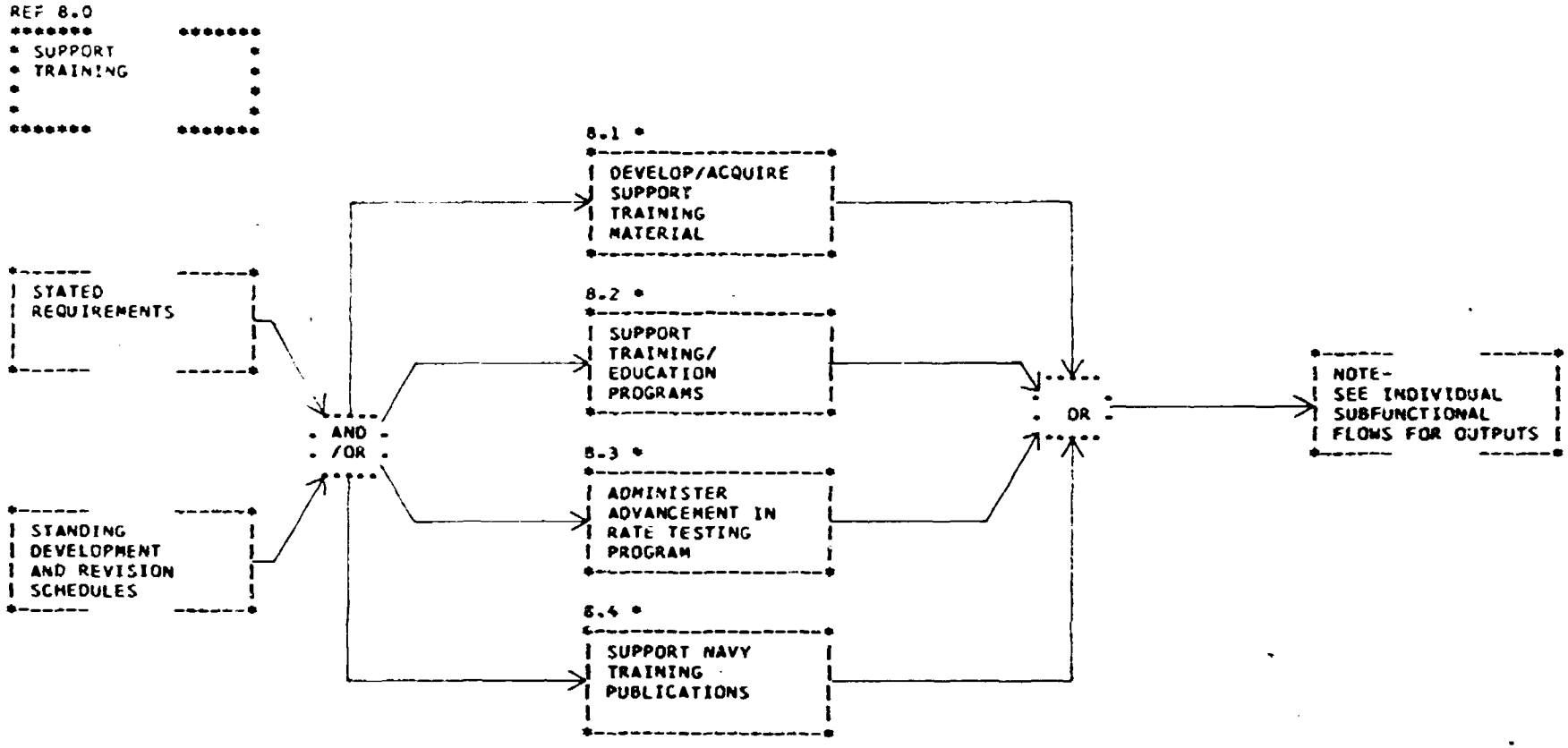

NOTE -THESE ARE PARALLEL SUB-FUNCTIONS WHICH DO NOT DIRECTLY "FEED INTO" A SEQUENCE, ALTHOUGH THERE ARE INTER-RELATIONSHIP BETWEEN THEM. THE INPUTS FOR EACH ARE STATED REQUIREMENTS AND/OR STANDING DEVELOPMENT AND REVISION SCHEDULES.

FIGURE VI 8.0-SUPPORT TRAINING

Page

8.4 Support Navy Training Publications 394
8.4.1 Develop Rate Training Manuals (RTM) 396
8.4.1.1 Evaluate "Qualifications for Advancement in Rating"
8.4.1.2 Develop Manual Outline
8.4.1.3 Write Manual by Chapters
8.4.1.4 Review/Revise/Approve
8.4.1.5 Publish and Disseminate RTM's
8.4.2 Develop and Maintain Formal Schools Catalog . 398
8.4.2.1 Obtain Inputs From "Schools"
8.4.2.2 Organize Inputs
8.4.2.3 Index and Cross-Reference
8.4.2.4 Publish and Disseminate Formal Schools Catalog
8.4.2.5 Collect Change Data On a Continuous Basis
8.4.2.6 Develop Quarterly Change Publication
8.4.3 Develop and Maintain Technical Publications for Training Devices
8.4.4 Develop and Maintain Catalogs/Indices of Training Materials

c. Functional Description of NETS - Function 8.0 Support Training

A general description of this function was presented in the outline and top-level flow of the preceding section. Further detail is shown in this section through a series of flows which expand key subfunctions. In addition to notes within the flows that elaborate on significant points, a discussion of the flow is contained on the facing page.

8.1 Develop/Acquire/Support Training Material

The major subfunctions and their inter-relationships are shown in this flow.

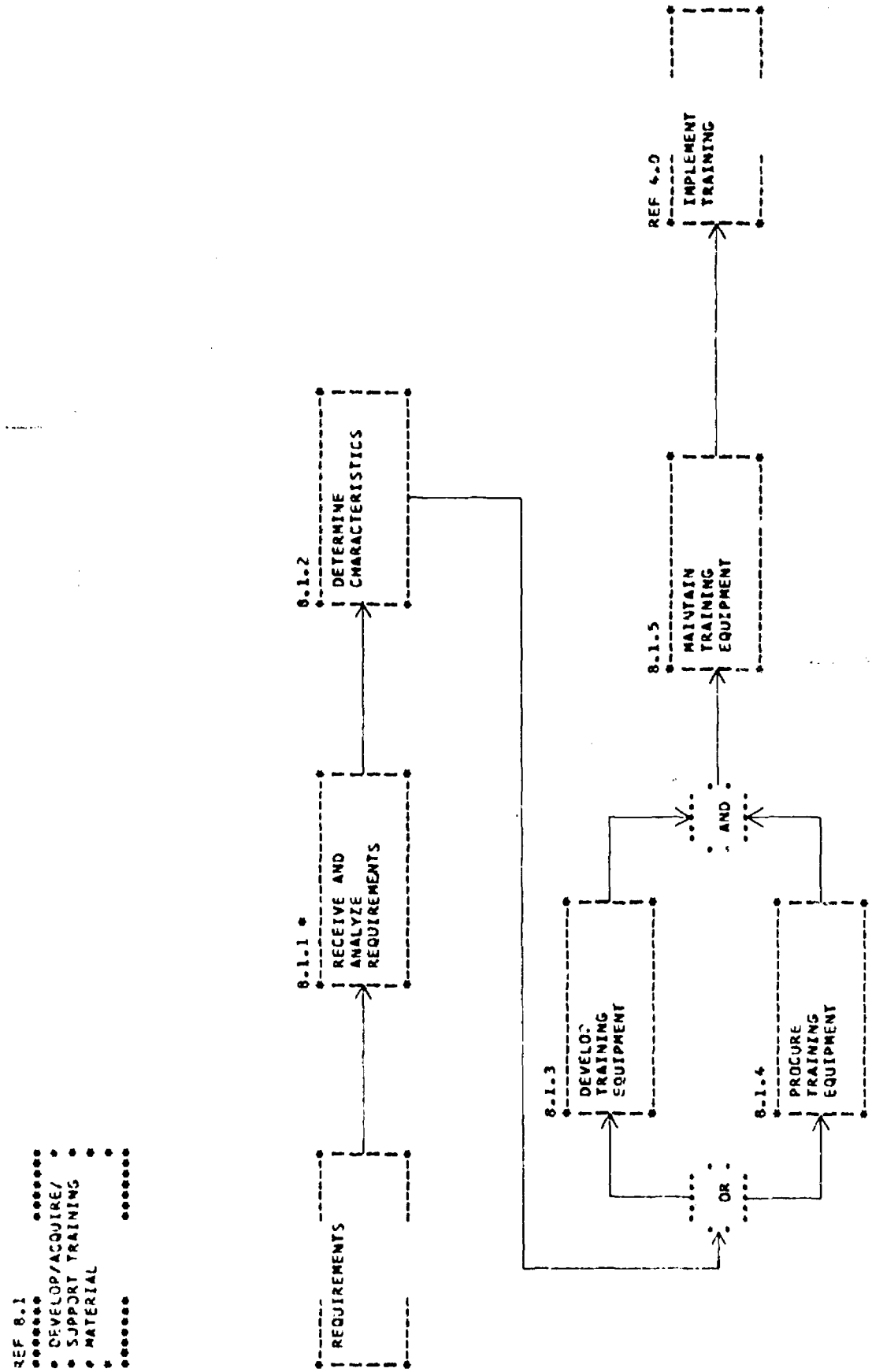

FIGURE VI 8.1-DEVELOP/ACQUIRE/SUPPORT TRAINING MATERIAL

N8.1.1A Receive and Analyze Requirements (Idealized)

A careful analysis of requirements is an absolute necessity, particularly when the problem or need is unspecified or vague. Such analysis, made in conjunction with the requester, may serve to further clarify his thinking about the need. Furthermore, once the requirement is spelled out, the implementation will be expedited, since must lost motion will be saved.

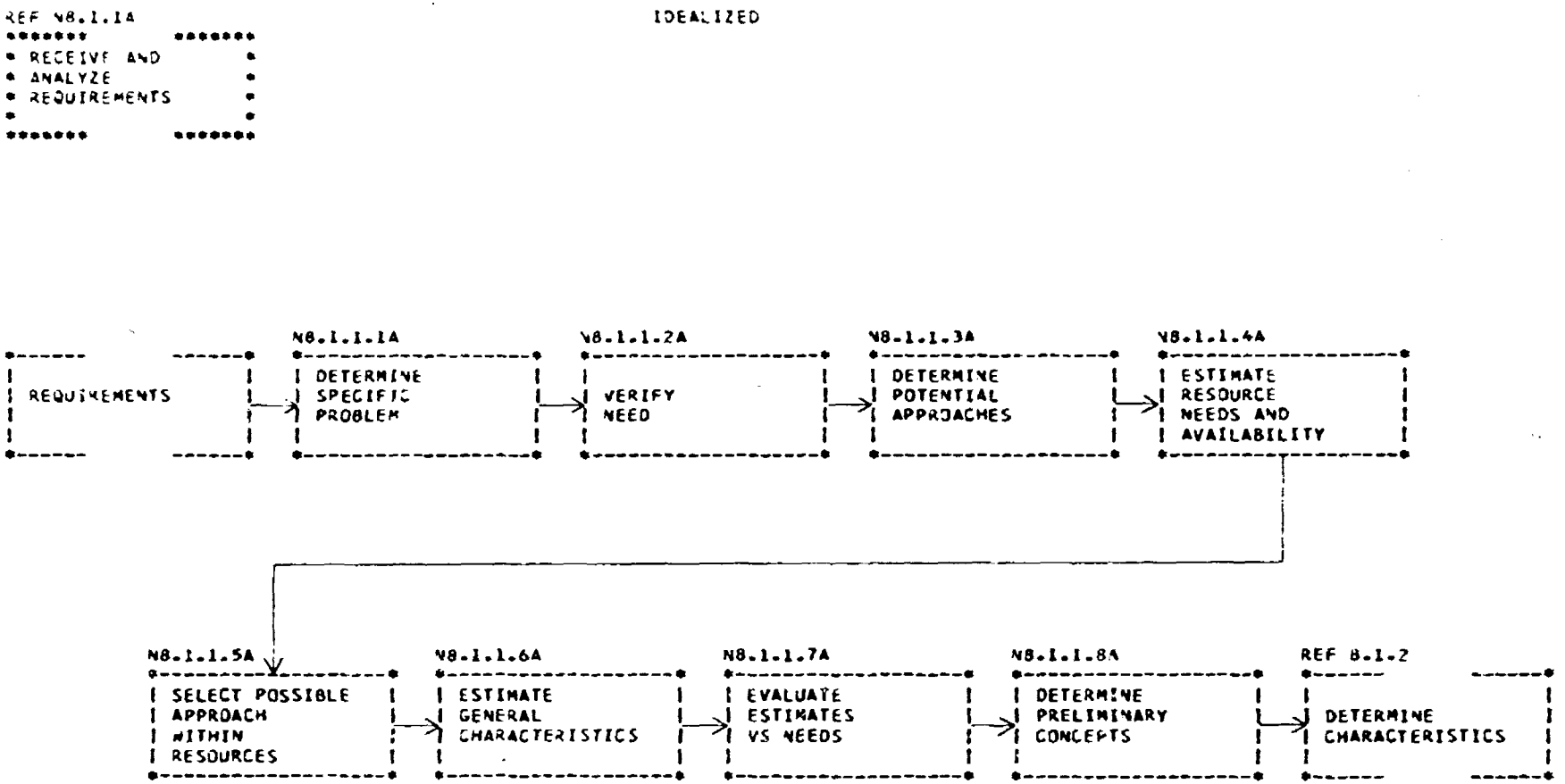

FIGURE VI N8.1.1A-RECEIVE AND ANALYZE REQUIREMENTS (IDEALIZED)

3.2 Support Training/Education Programs

This is an overview of the various programs supported.

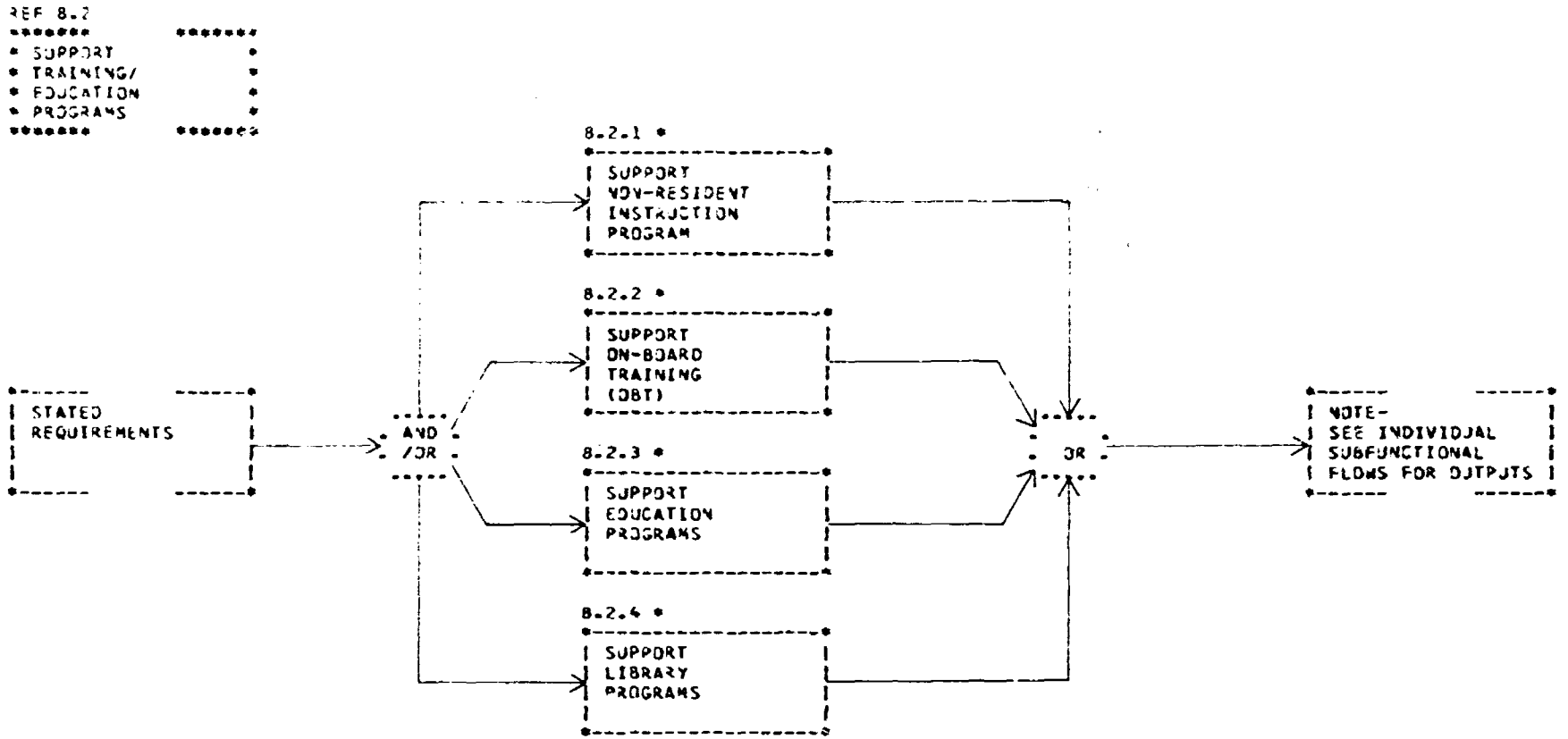

NOTE -THESE ARE PARALLEL SUB-FUNCTIONS. COMMENTS FOR THE TOP LEVEL OF THIS FUNCTION (8.0) PERTAIN HERE ALSO.

FIGURE VI 8.2-SUPPORT TRAINING/EDUCATION PROGRAMS

6.2.1 Support Non-Resident Instruction Program

This program, formerly called Correspondence Courses, is centered around the Rate Training Manuals (RTM's). The subfunction is self explanatory from the flow.

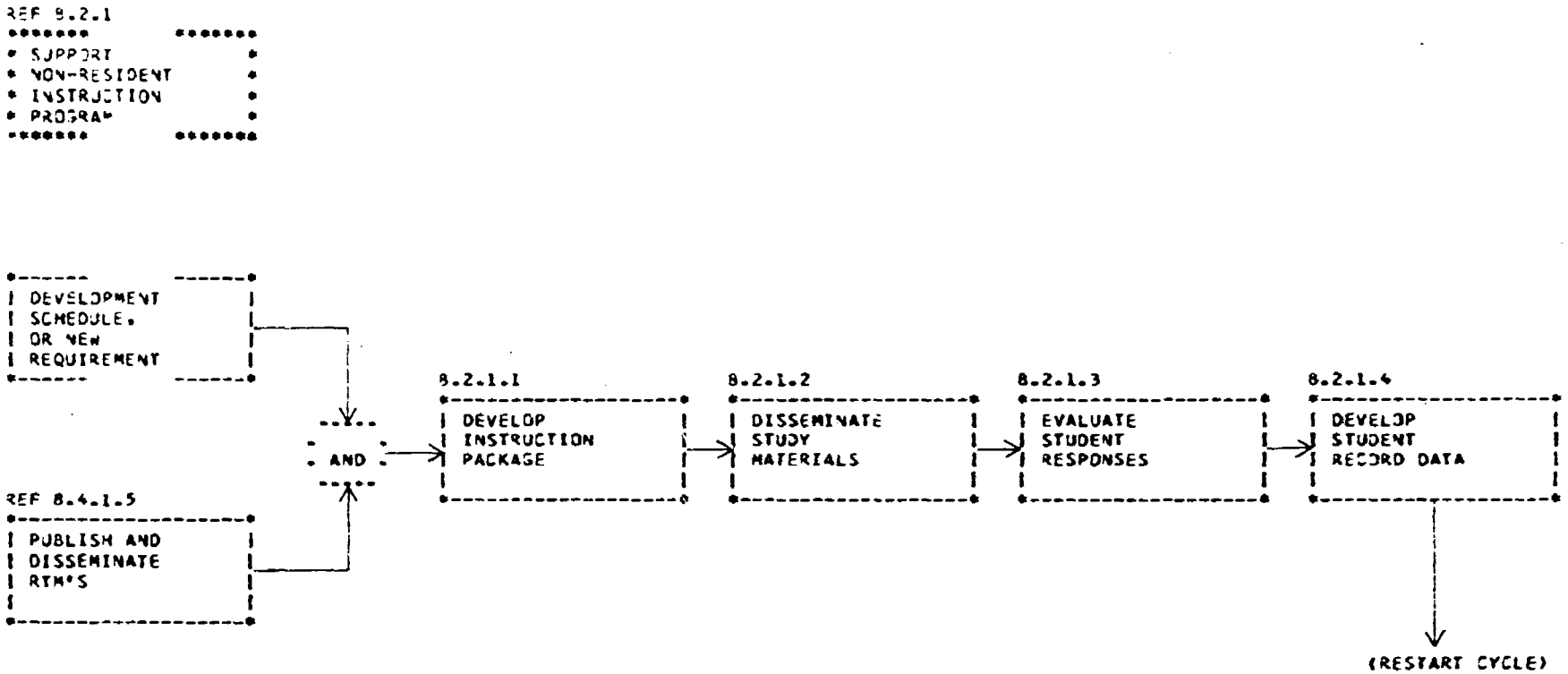

FIGURE VI 8.2.1-SUPPORT NON-RESIDENT INSTRUCTION PROGRAM

6.2.1 Support On-Board Training (OBT)

The only OBT packages found were developed by CHNAVTRASUPP. However, few such packages were found, although development of more packages is in progress. The FBM community uses the "Self Study Workbook" which is described as an OBT package, but the introduction states that the workbook is to refresh and reinforce knowledges and skill. The best instance of OBT aids found currently is the PQS.

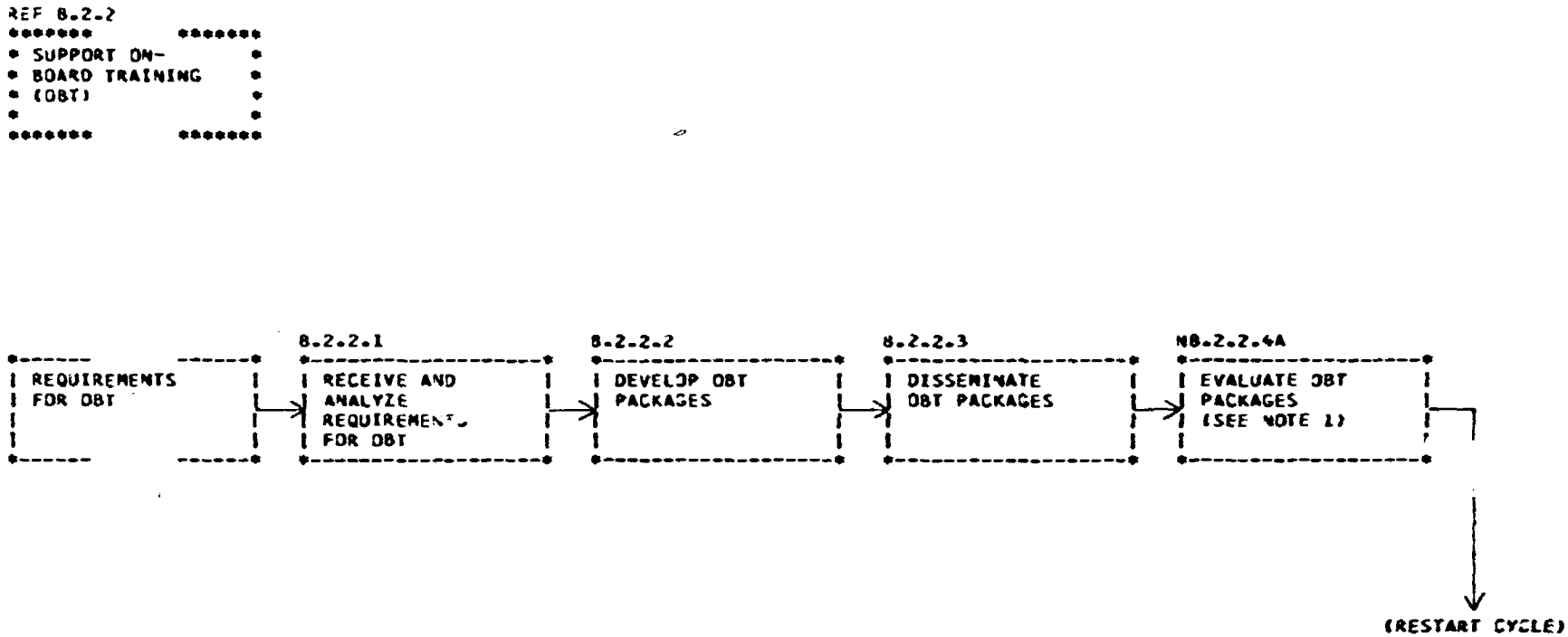

NOTE 1-NO INSTANCE OF SUCH EVALUATION WAS FOUND. IN PART THIS MAY BE DUE TO THE FACT THAT SUCH PACKAGES ARE RARE.

FIGURE VI 8.2.2-SUPPORT ON-BOARD TRAINING (OBT)

8.2.3 Support Education Programs

The simple flow for the subfunction is self-explanatory.

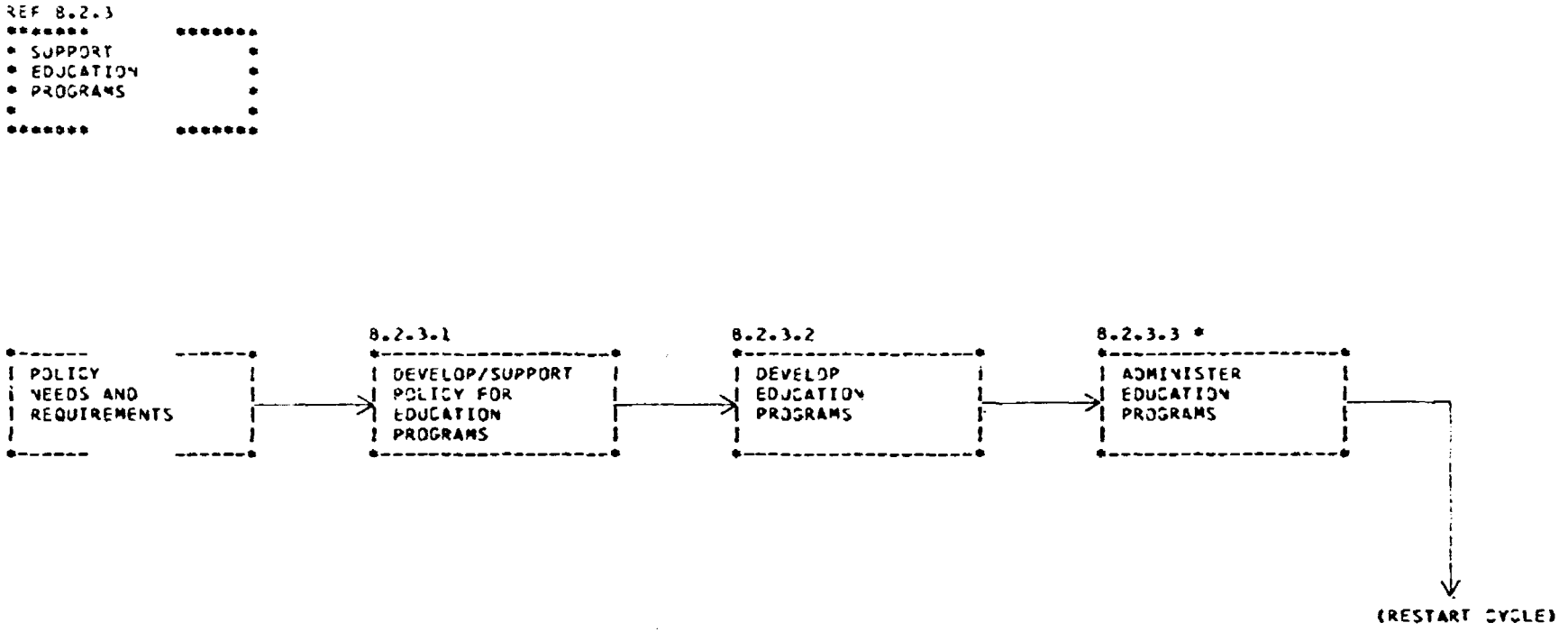

FIGURE VI 8.2.3-SUPPORT EDUCATION PROGRAMS

8.2.3.3 Administer Education Programs

The flow for this subfunction is self explanatory.

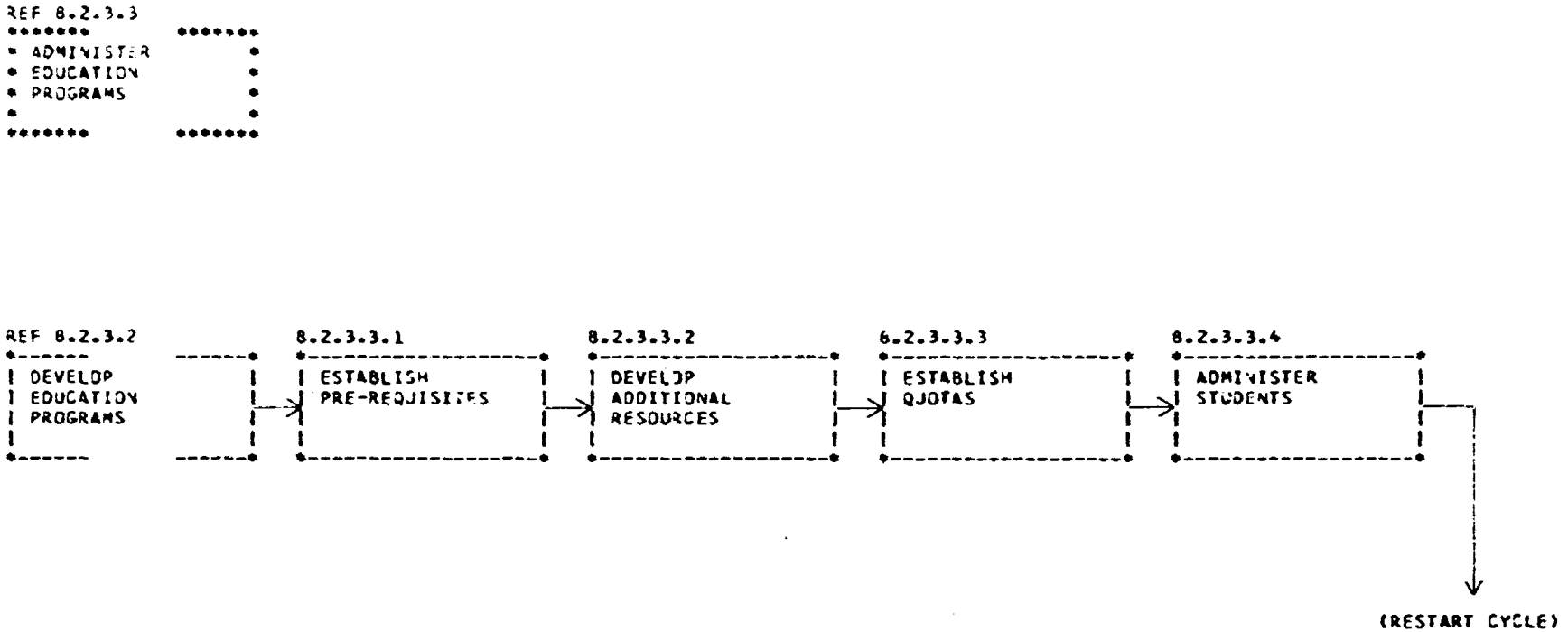

FIGURE VI 8.2.3.3-ADMINISTER EDUCATION PROGRAMS

8.2.4 Support Library Programs

The flow for this subfunction is self explanatory.

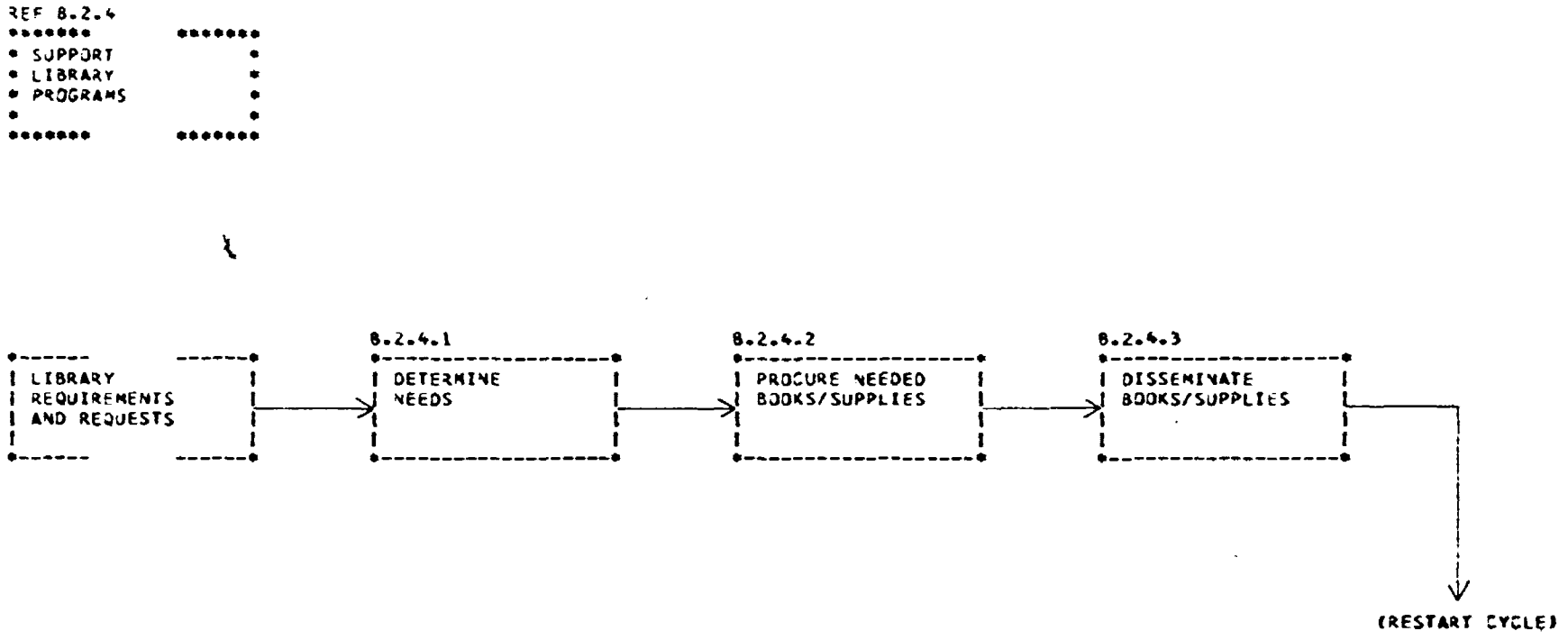

FIGURE VI 8.2.4-SUPPORT LIBRARY PROGRAMS

8.3 Administer Advancement in Rate Testing Program

This is an overview flow of the total program.

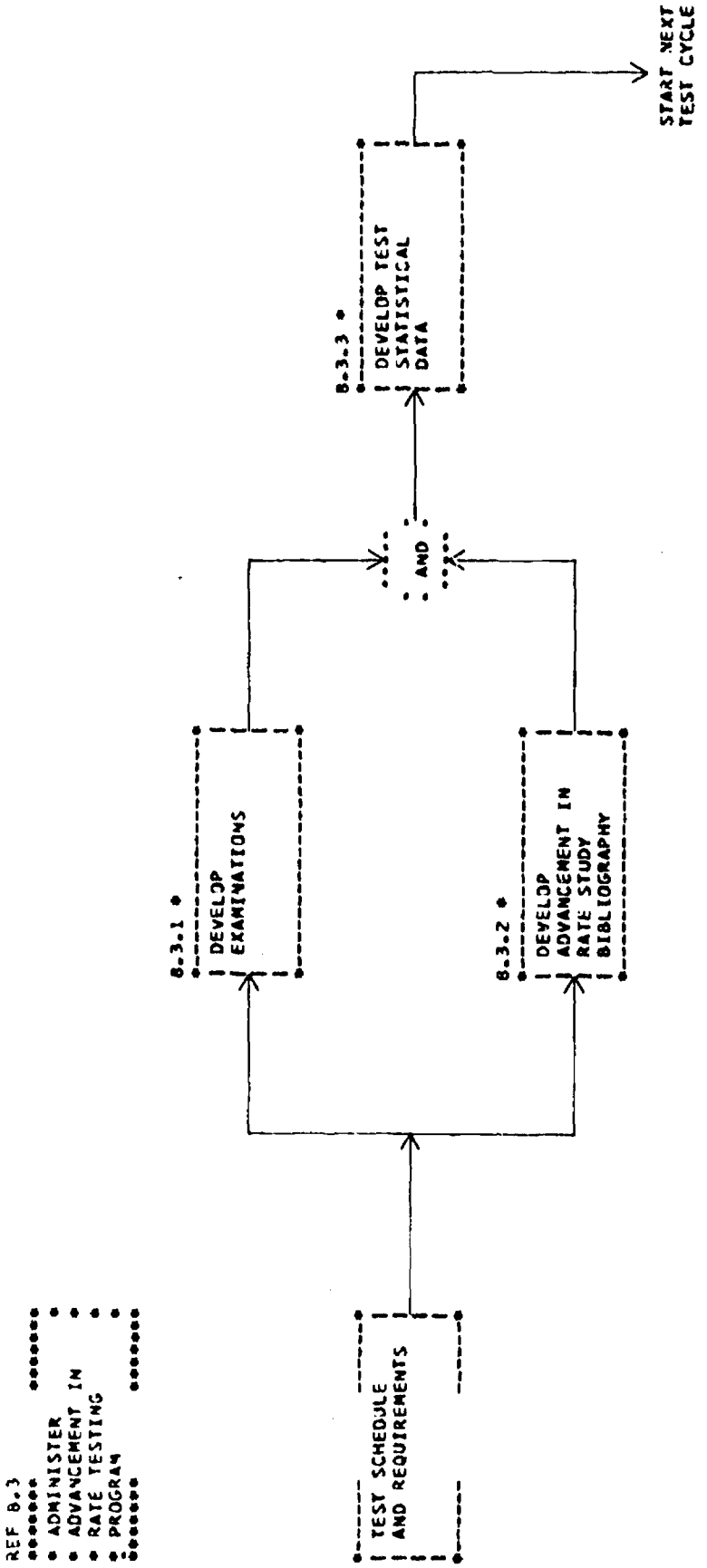

FIGURE VI 8.3-ADMINISTER ADVANCEMENT IN RATE TESTING PROGRAM

8.3.1 Develop Examinations

This flow details the general tasks involved in the development of the examinations. Since the qualifications of NAVPERS 18068C are the basis for the examinations, the initial step is to analyze the appropriate qualifications for the rating and rate. The sequence shown is the usual one, although several tasks may be conducted jointly once the outline is written.

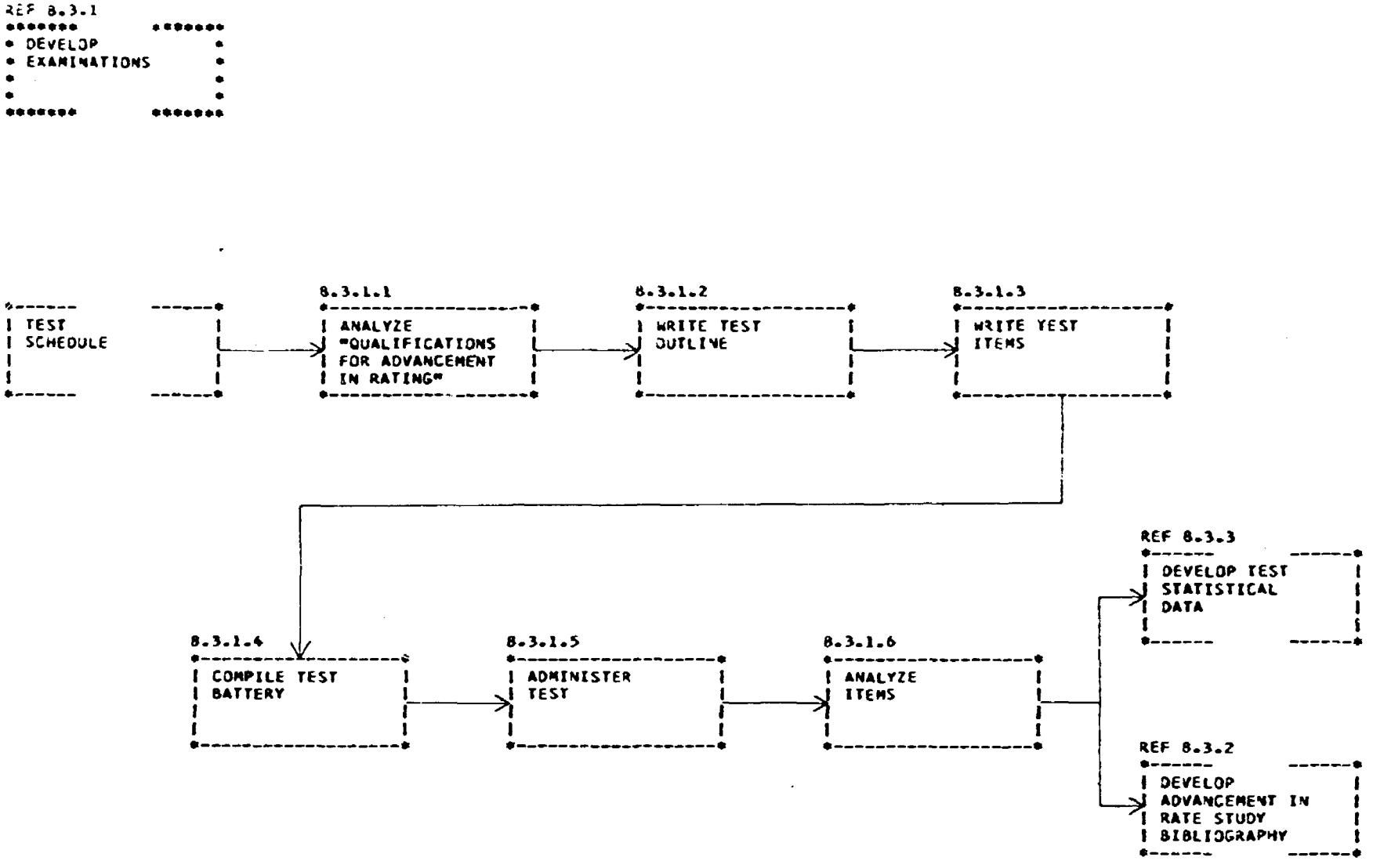

FIGURE VI 8.3.1-DEVELOP EXAMINATIONS

8.3.2 Develop Advancement in Rate Study Bibliography

The flow for this subfunction is self explanatory.

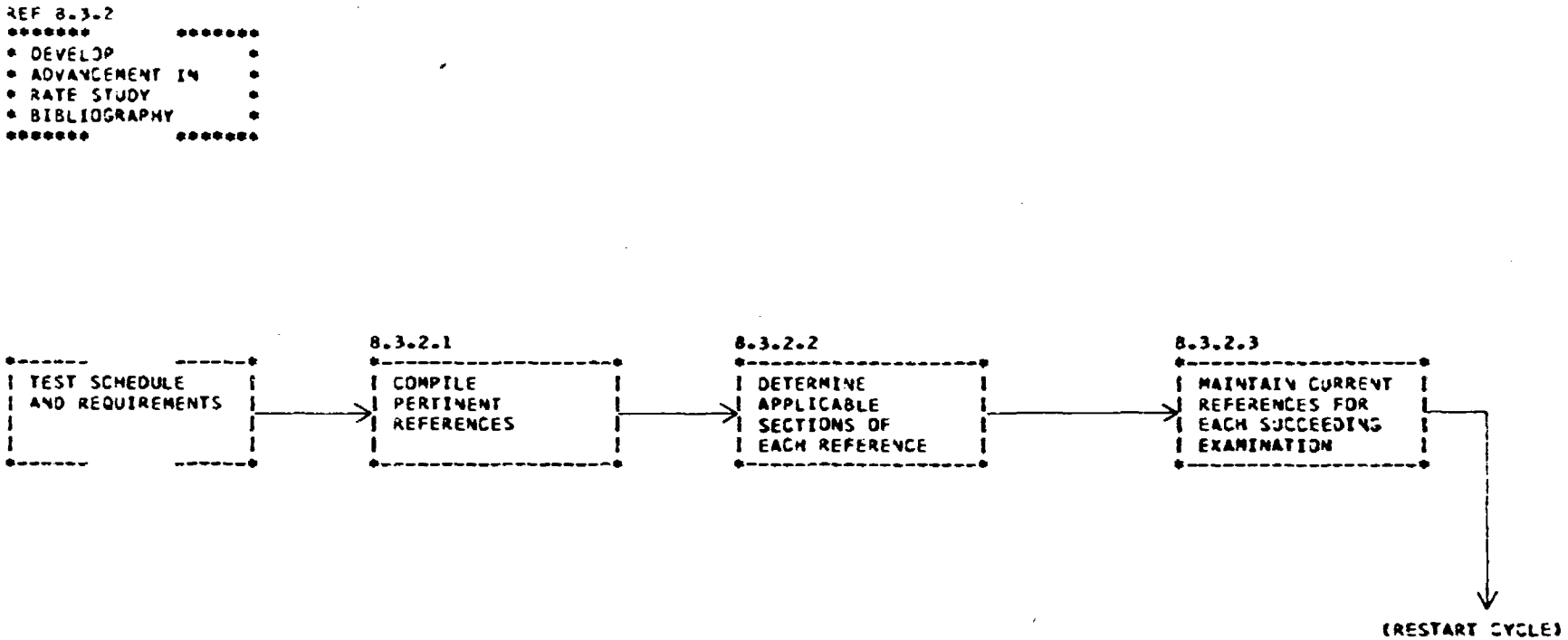

FIGURE VI 8.3.2-DEVELOP ADVANCEMENT IN RATE STUDY BIBLIOGRAPHY

8.3.3 Develop Test Statistical Data

A large amount of excellent quality statistical analysis is performed on the mass of test data. Of particular interest is the check for collusion which is made. This indicates, in a uniquely devised approach, if there is a possibility that extraneous factors were involved during the test situation.

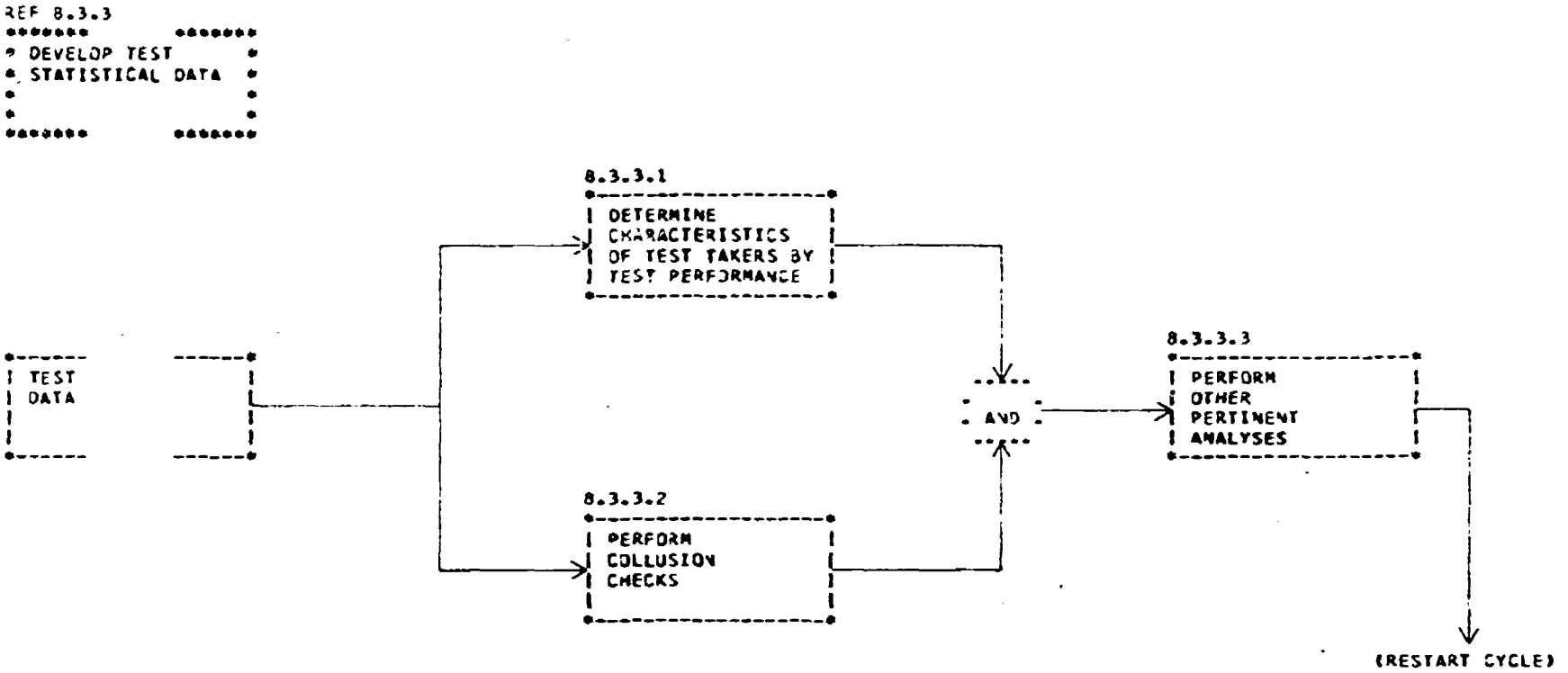

FIGURE VI 8.3.3-DEVELOP TEST STATISTICAL DATA

8.4 Support Navy Training Publications

This is an overview flow showing the major classes of publications involved.

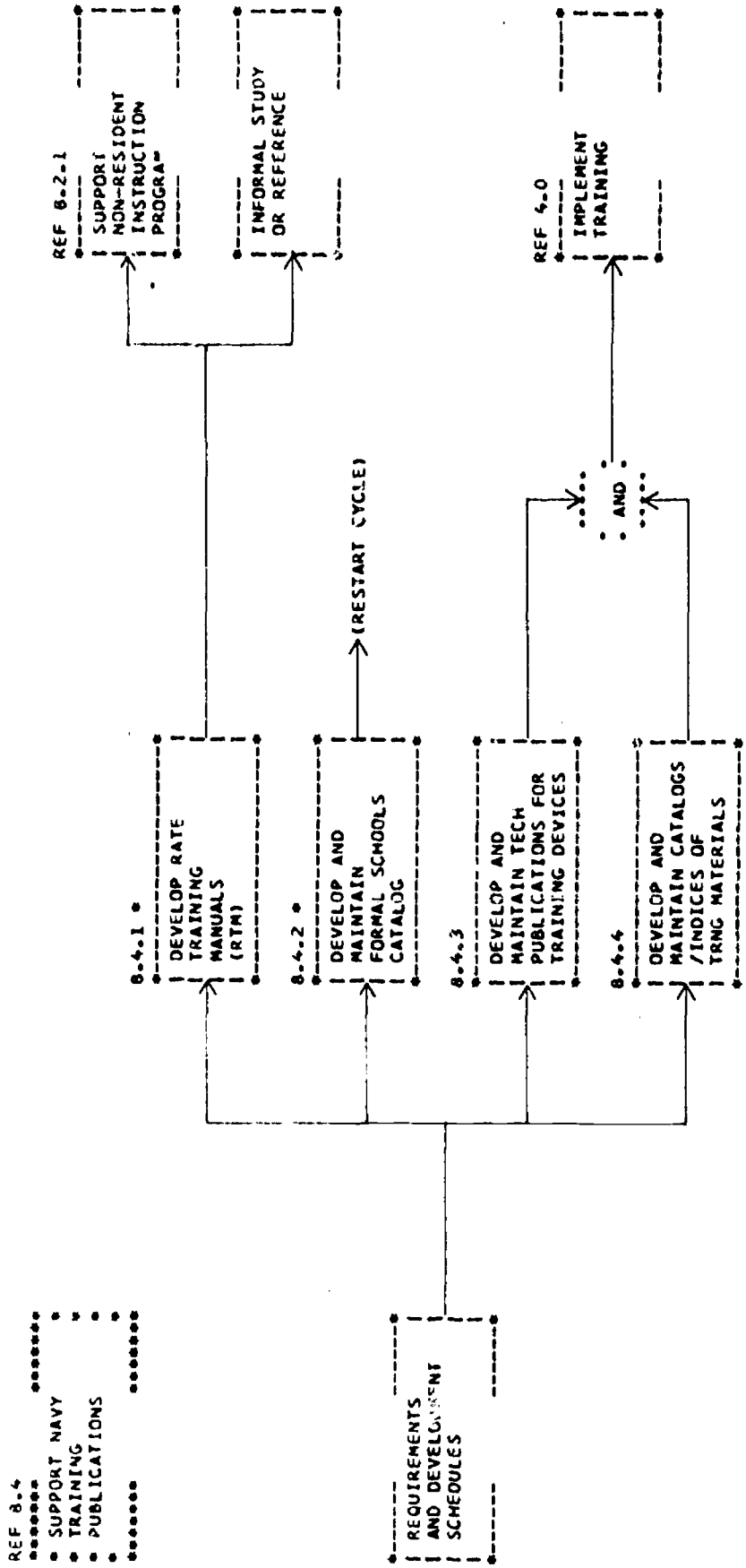

FIGURE VI 8.4-SUPPORT NAVY TRAINING PUBLICATIONS

8.4.1 Develop Rate Training Manuals (RTM)

NAVPERS 18068C is the basis for the RTM's. Currently there is a delay in updating RTM's because an extensive revision of the basic document is expected. The sequence of development is as depicted in the flow.

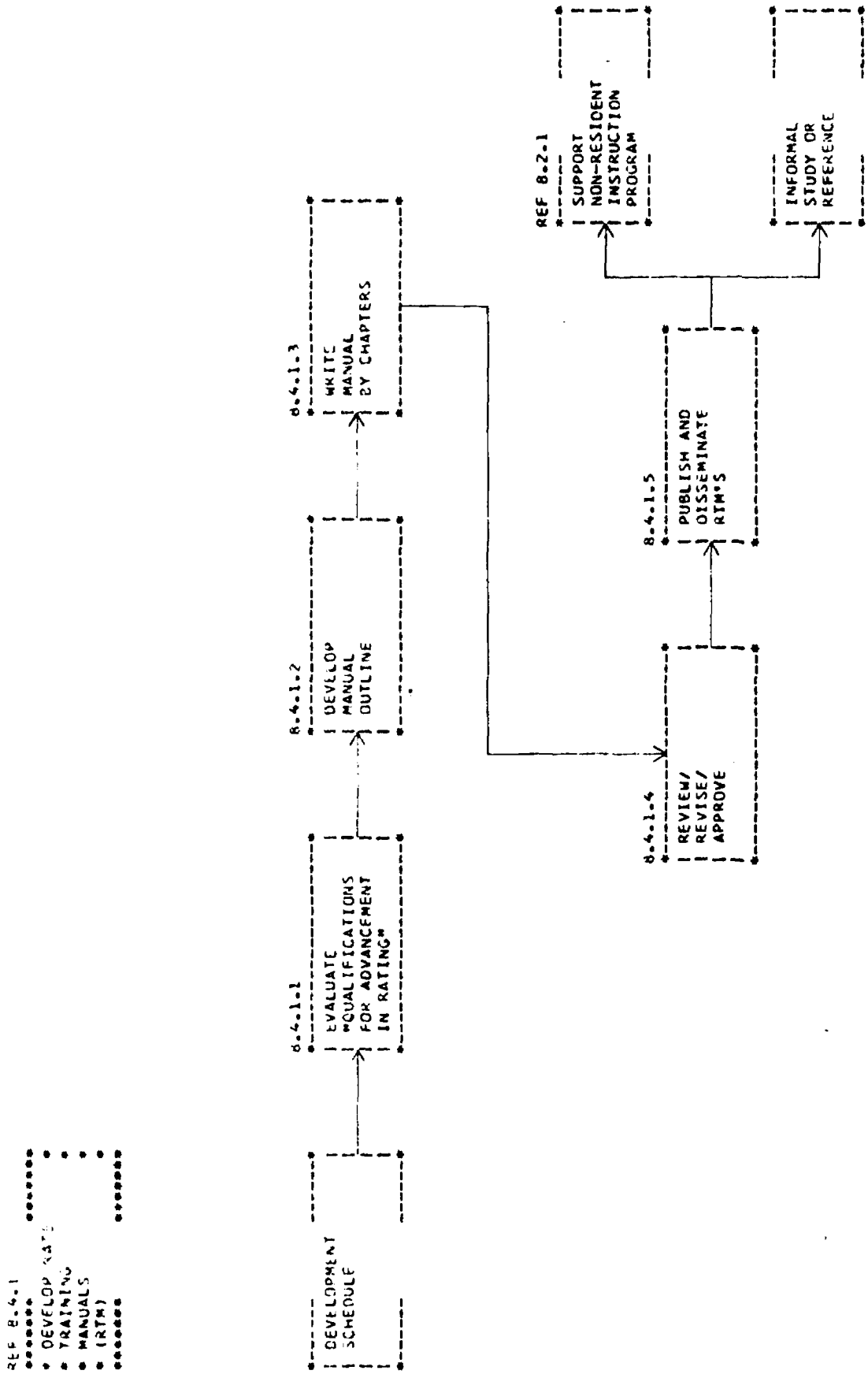

FIGURE VI 8.4.1-DEVELOP RATE TRAINING MANUALS (RTM)

8.4.2 Develop and Maintain Formal Schools Catalog

The general development sequence is as shown in the flow. CHNAVTRASUPP has taken over this responsibility relatively recently. A new cataloging technique is being devised which is designed to simplify the catalog approach.

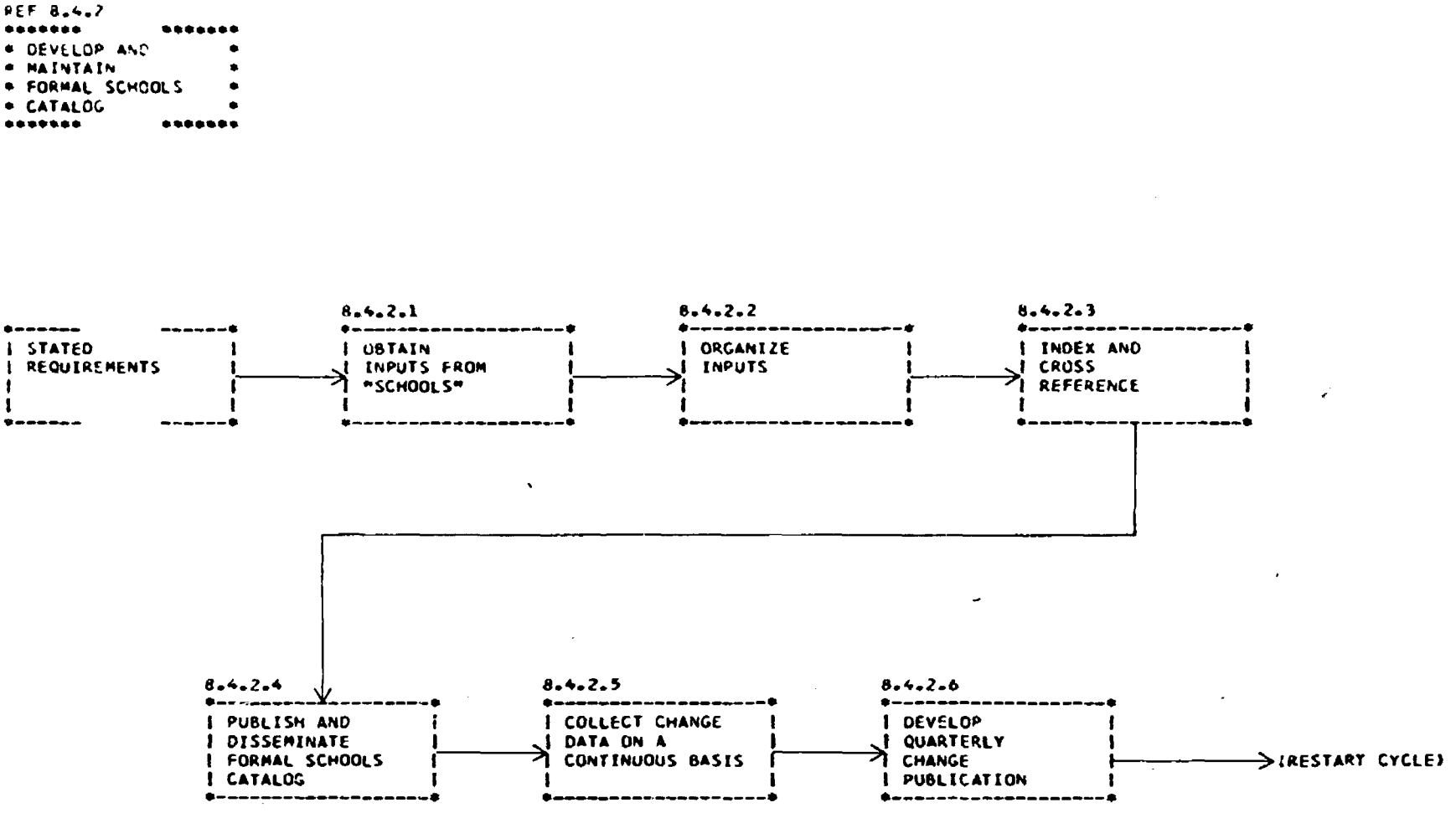

FIGURE VI 8.4.2-DEVELOP AND MAINTAIN FORMAL SCHOOLS CATALOG

d. Summary of Major Technological Gaps and Problem Areas - Function 8.0 Support Training

1) There is no systematic analysis for developing needs/requirements for training equipment (aids/devices).

2) The dissemination of information about training equipment/aids developed in individual schools is limited.

3) The development and support of on-board training requires a more intensive emphasis.

4) The school catalog program is cumbersome and difficult to use in its present form.

5) There are major discrepancies between naval policy on testing for advancement in rate and what the individual actually does on the job.

6) The inventory and tracking of training equipment requires modernization.

e. Idealized Approaches - Function 8.0 Support Training

The approaches to idealization are designed primarily toward the alleviation of major problem areas. However, several new points emerge which go across specific problems. Since these permeate the totality of the NETS, these non-functionally specific areas will be included in this section.

1) A basic requirement for idealization is in the way in which needs for training equipment are developed. Training equipment includes various aids such as outlines, charts, slide-rules, nomograms, conversion tables or any other methodology which will help the individual learn or perform on his job more effectively. This description, in effect, makes no distinction between training aids and performance aids. The assumption is that the training is aimed at job performance ultimately. Training equipment further involves devices such as part task trainers and complex simulation devices.

The more complex, primarily hardware developments, are discussed in Function 1.0 Develop Training Requirements, since such developments are handled, usually, as part of a total system procurement. However, the development of needs for other kinds of training equipment is through individual schools or other training organizations. These should be developed and analyzed in a systematic manner such as that shown in Figure N8.1.1A. Preceding such an

analysis, there should be a careful examination of all curricula and presentations to determine where aids may be helpful. Effective feedback from the Fleet should include information on performance which presents unusual difficulties. Such information would indicate a potential need for an aid, in addition to a possible need for emphasis in training. The inter-relationships between instruction and aids is discussed in the context of Function 4.0 (e) Implement Training.

2) Several instances of excellent aids were found during visits to schools. In no case was it evident that information about such equipment/approaches/ideas had been communicated to other training sites which might have use of such ideas. As an ideal, the total training establishment, as well as the Fleet, should develop needs for aids, as covered previously. Also, where so desired, each organization should develop their own ideas, equipment, aids, etc. However, once these are developed, the information must be made available to any and all segments that may conceivably use such an approach.

There are several possible avenues of communication. One could be through a section of the NAVTRA magazine, which would give a general description of the approach, how it operates, and how to get more details on the idea.

The catalog of training aids/devices should include information about those self-developed by training units or other activities. Generally the production of aids/devices should be through the Naval Training Equipment Center (NTEC). However, if the development of quantities is not justified -- based on a cost/utilization study -- directions for "self-building" the item should be available. Such "plans" would be listed.

Periodic seminars and meetings, such as the Training Commanders Conferences should include presentations of training/performance aids. For example, several outstanding approaches to aids have been developed at NPRDC. It would be a virtual certainty that the specific aids and the approach would be utilized if the "school-house level" management had knowledge and understanding of these applications. One way to build this comprehension would be through meetings which involve presentations on various techniques and methodologies, including the use of aids.

3) On-board training (OBT) is a direct Fleet responsibility. Since training is involved, this must be considered as part of the total NETS. The conduct of OBT is covered, indirectly, in Function 4.0 Implement Training. Aspects of OBT pertinent to the function of Support Training deal with the development of training courses, sections of courses, study guides, and references, as well as the aids mentioned previously. Such developments are needed to support OBT.

The initial requirements for OBT must be developed systematically. In no case should the Fleet simply be asked, "What do you need?" In one instance where such a request was made, a list of seventy-three items was returned. Included were such things as:

Cooking and Baking
Basic Barbering
Honors and Ceremony Officer
Beach Gear.

Other items further indicated that asking the Fleet was not the best way to define requirements. This is an example of the kind of problem mentioned in the Function 1.0 discussion.

Ideally, such needs should be developed on the basis of observed deficiencies in performance. Such a deficiency could be a failure to keep certain equipment operational within design parameters. Assuming the equipment does not have inherent design problems, it is logical to assume a training gap. The analysis implied here must clearly define and bound the need. The next question is a decision as to whether an existing course is applicable and feasible or if OBT is required. If OBT is needed, the basis for a clearly defined and specific training requirement has already been developed.

The development of OBT materials or training packages should generally be in conjunction with Fleet representatives or at least with close liaison. Regardless of how good the training support is, the Fleet must have some involvement. Otherwise, it is a distinct possibility that the materials may not be used. Materials for OBT must necessarily be of top quality since they will be largely stand-alones without the need for instructor intervention. The packages should be developed by professional personnel, with assistance from technically qualified experts.

All such packages must be verified before release by a try-out in the form of an initial study. Such trial will show the need for revision, in all probability.

As the use of OBT is stressed (see idealized approaches for Function 4.0), the needs and motivation for such packages will increase A large percentage of the effort of training units in the future should be in the preparation of OBT materials in support of the Fleet.

4) The school catalog program in its current form has a large number of problems. This is a known fact in the Navy, both within and outside of the NETS. A basic requirement is standardization of:

   Course numbering
   Descriptive information
   Indexing.

   Such standards, among other things will eliminate a fair amount of duplication which exists. Standards and a careful definition of terminology will be an early step in ultimate computerization of all training catalogs, including those for technical publications, films, training equipment, etc.

   The development of a computer based system for cataloging is an essential idealization. It would make the information easy to obtain, would facilitate revision, and eliminate much confusion.

   This system, while having facility for physical printout of volumes, should also be capable of query by remote terminals. If an individual wishes to learn what courses are available for a particular kind of job in relationship to a specific system, he should be able to get just that information, including when the courses meet, who has quota control, and how to apply.

5) The dichotomy between job performance and the qualifications for advancement must end in the idealized situation. Advancement in rating exams could be based upon the PQS/ Task Analysis. The most significant advance to be made is to require that the prerequisite to testing be a demonstration of proficiency upon selected parts of the pertinent PQS.

   While several possible approaches might be used, one potential alternative would be to either use a single task

analytic approach for both training and the "Qualifications for Advancement in Rating," or to remove the use of the "Quals" as the basis for testing.

The use of task analytic data may require a more complex kind of test situation, since both general and equipment specific kinds of knowledge may have to be tested. For example, fifty percent of a test might cover items applicable to the entire rating, while the other fifty percent might pertain to individual equipments or groups of equipment. Some similarity can be obtained by using an outline which covers the same general kinds of information about different hardware. With the use of standard scores and statistical corrections, if needed, a more individualized testing procedure is certainly feasible.

Gearing the testing program to job performance would provide a strong positive incentive for OBT of all types, but particularly for the PQS approach. If a change in testing procedures and policy is not made, the total test program may be regarded increasingly as a blind obstacle, with a merely formal goal of making promotion an added hurdle unrelated to performance. Since the Navy program is the best among the services, all effort should be made to keep that image. In part, there is a recruiting incentive in a fair, intelligent method of selecting personnel for advancement.

Another idealized approach to the examination program would be greater objectivity in selecting personnel that are recommended to take the examinations. This may be achieved by requiring, as a prerequisite, the completion of pertinent parts of the PQS.

6) The inventory of training equipment of all types is extremely large and varied. Revision of records is necessarily complex and lengthy under such circumstances. In addition, the problem of keeping track of the large variety and numbers of items which have been assigned or loaned is truly gigantic. The ideal approach consists of computerization of this mass of data. Once the techniques are set, there would be no need for large volumes of paper records, since flexible retrieval would allow the presentation of only that information which is needed. In addition, programs can be instituted which would provide automatic printouts of data on a specific time basis. This kind of application amounts to an automatic suspense file, for determining, on a periodic basis, where certain items are, or presenting the location of items which require periodic preventive maintenance.

F. DISCUSSION

This report presents a generalized functional description of the Naval Education and Training System which has been designated as the NETS. The major segment of the NETS is the Naval Education and Training Command (NETC). Consequently, the focus was on that command. However, a significant amount of training takes place outside of that command and much of this other training was included in this study.

Not all parts of the NETS were visited. The data which form the groundwork of this report were obtained on a representative sampling basis. Specific organizations visited are shown in Appendix D. While a large number of organizations were visited, it is clear that many important areas were not. There is no significance in the fact that an organization was or was not visited. The objective was to get a representative cross-section of naval education and training, and at the same time have an analytic task that would be feasible. The cross-section was obtained by visiting at least one of every type of training organization. Feasibility involved the arranging of travel and duration of stay at a location in the most cost-effective manner possible.

The ultimate objective of this research project is to develop computer models as management tools with which to improve training. Phase I forms the foundation by describing the current system. This system is described functionally through a series of flow charts. The system was considered to have eight major functions. Each function is broken down systematically and then further analyzed to identify subfunctions and tasks. No consideration is given as to where, organizationally, these operations are performed.

This point is significant, since another part of the Phase I study is to identify technological gaps and problem areas. This identification is done by function. In no case do these gaps/problems pertain to any particular organization. They pertain, however, to the over-all system. To an extent some of the problems may relate to some or all organizations. However, it would be erroneous to assume that any unit or units were singled out. Because of the need to generalize so widely, it was necessary to be all-encompassing and to stress commonalty rather than nuances. The fact that an organization does not have any one problem area mentioned doesn't mean that the problem is not a system problem. It may mean that for that particular point, the organization has a system for effectively avoiding the problem. In this case, careful analysis of the approach used by that organization may help resolve the over-all system problem.

A number of idealized concepts are given also for each function, as well as for critical interfaces with functions outside of the training/education area. Since all significant functions are being per-

formed, it was not necessary to add functions. Idealization centered around the methodology of performance and different techniques, particularly in an altered context to be expected in the 1980 time frame. Instances may be found where some approaches of various organizations come close to a few of the idealizations. This is to be expected and is a direct manifestation of differences between organizations. In no case can it be stated that any organization is near the ideal since most of the concepts are oriented in a future, rather than a current situation.

As previously stated, the objective of the Phase I study was to set the foundation for Phase II - the development of mathematical models. However, there are direct current applications of the output of this report. Such applications may be categorized as:

- Operational/Systems Analysis
- Documentation
- Communication
- Training of Staff.

1) Operational/Systems Analysis

The analysis described in this report is a study of the operations of the Naval Education and Training System (NETS). The analytic approach was systematic in that a progressive functional breakdown was followed. Since this analysis covered a broad cross-section, many parts will not fit exactly for specific organizations. However, by using this approach as a guide, individually tailored functional/operational flows may be developed. These could follow a functional orientation and/or be based on specific operations. The most desirable technique is to follow a combination of these. The functional analysis assures that all significant functions/subfunctions/tasks have been considered. In those instances where operations involve combinations of functions, flows for the operations are required.

All applications of this analytic approach require that such a "tailored" analysis be performed initially. A primary immediate advantage of this analysis is the fact that the organization can determine readily the effectiveness of its operations. Such evaluation is performed by looking for such problems as:

- Redundancies
- Operations/functions with no output or perceived purpose
- Lack of inputs or appropriate/timely inputs

- Gaps or communication failures
- Required functions not being performed.

This is only a partial listing of problem areas which may be revealed by such a detailed analysis focusing on a single organization. The graphic form of the flows as carried to lower levels of detail magnifies any "system" operational difficulties which might exist. The initial application then is to allow a careful self-evaluation of the operation of an organization.

2) Documentation

A second type of application is as a form of highly detailed documentation. Organizations are invariably required to develop operating procedures. These are usually unclear, incomplete, difficult to understand, or obsolete. The system flows for an individual organization may be documentation which suffers none of these deficiencies. At higher levels of detail, each block tells what must be (or is) done. As the levels become increasingly more detailed, they eventuate into how to perform each task. Thus, carried far enough, procedures may be the final output. Documentation in the form of flows is relatively simple to revise and update, which is another advantage of such documentation.

3) Communication

The system flows are also one of the clearest forms of communication that might be used. No other method can so lucidly convey alternative approaches, logical branching, and loop-backs. One page with a small number of blocks can convey a message that pages of text could not equal. For this reason, the flows are useful to describe new or revised approaches, as well as to plan potential approaches. Often a concept that initially appears sound will be revealed as flawed when placed in flow form.

4) Training of Staff

The preceding applications all point to the fact that appropriate documentation in the form of flows serves as an outstanding vehicle to orient/train new staff personnel.

A new commanding officer may obtain an overview of his organization, as well as get a good general feel for what is being done and how it is done. Similarly, new personnel may learn in a relatively simple manner how their duties fit into the total operation.

A number of potential applications have been mentioned. It is necessary to point out again that such applications require an initial detailed analysis of the organization. Such analysis is not a simple operation, nor does it come easily. Generally, trained professional analysts are required. There is a possibility that selected staff personnel, with training, may be able to perform some analysis with proper assistance and monitoring. Personnel selected must be highly proficient in the technical area to be analyzed; have an analytic, methodical personality; and be motivated to perform such analysis.

VII. SELECTION AND EVALUATION OF CANDIDATE MODELS

A. INTRODUCTION

A systems approach requires that suggested design alternatives be evaluated by formal prediction of possible consequences. The tools usually used for such predictions are called models. These may be mathematical constructs, computer simulations, graphical procedures or other techniques which aid in predicting the way in which any proposed system or subsystem operates. In addition to evaluating system design alternatives, predictive models serve an equally useful purpose in the management planning process. A management model may assist a school manager in evaluating the alternatives open to him as a result of course cancellations or a requirement for additional offerings, or a model may be used to evaluate the feasibility of implementing a specific training plan throughout the training organization. Although predictive models classified as management planning models can take many forms, the objective of each is to provide the manager with the necessary tools to operate the existing system as efficiently as possible. Candidate models for future development of both types are described and evaluated in this section.

B. GENERAL APPROACH

This section describes the process by which a subset of the total potential modeling areas identified within the Naval Education and Training System (NETS) (described in Section VI) has been selected for development as a set of mathematical models.

Figures VII 1 and VII 2 depict the top level functional elements that comprise the NETS. Both existing models and proposed candidate models are listed under the appropriate functional block. By putting each of the candidate models in perspective against the total training system, the NETS requirements in terms of needs and the interactions of candidate models, both within a functional area and between functional areas, can be better assessed. In addition, if it is assumed that all proposed candidates will eventually be developed and implemented, then Figures VII 1 and VII 2 can be thought of as a composite model of the total training system able to predict the behavior of the system under a variety of conditions.

However, given the constraints of time, money, and technology, only a subset of all potential modeling areas identified within the training system can be addressed. Since that subset will of necessity consist of only one or two of the modeling areas, both the process of identifying the total set of modeling areas from which the final selection will be made, and the process of evaluating the modeling area to be developed during Phase II of the Design of Training Systems project are of prime importance.

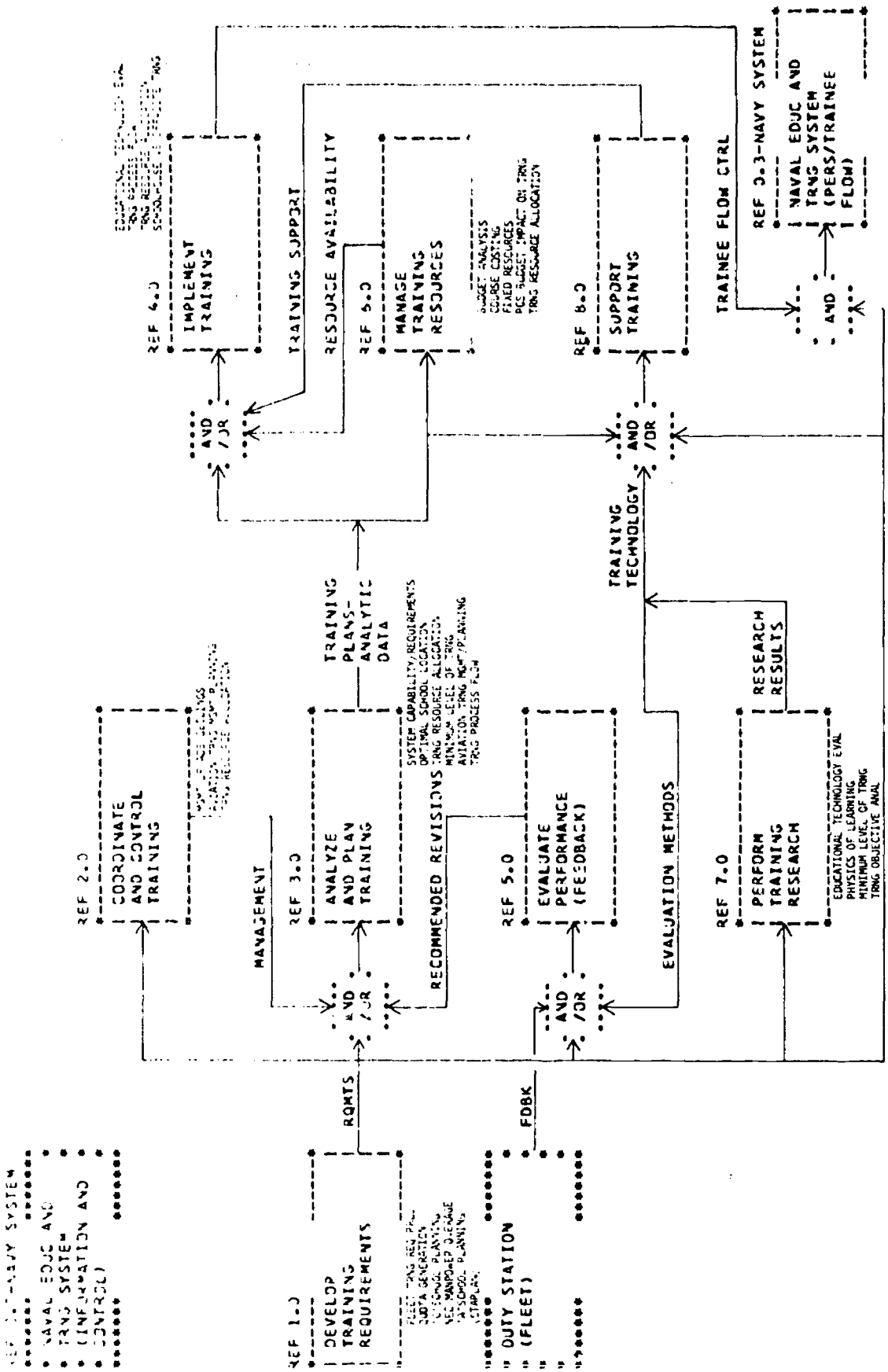

FIGURE VII 1-NAVAL EDUCATION AND TRAINING SYSTEM (INFORMATION AND CONTROL)

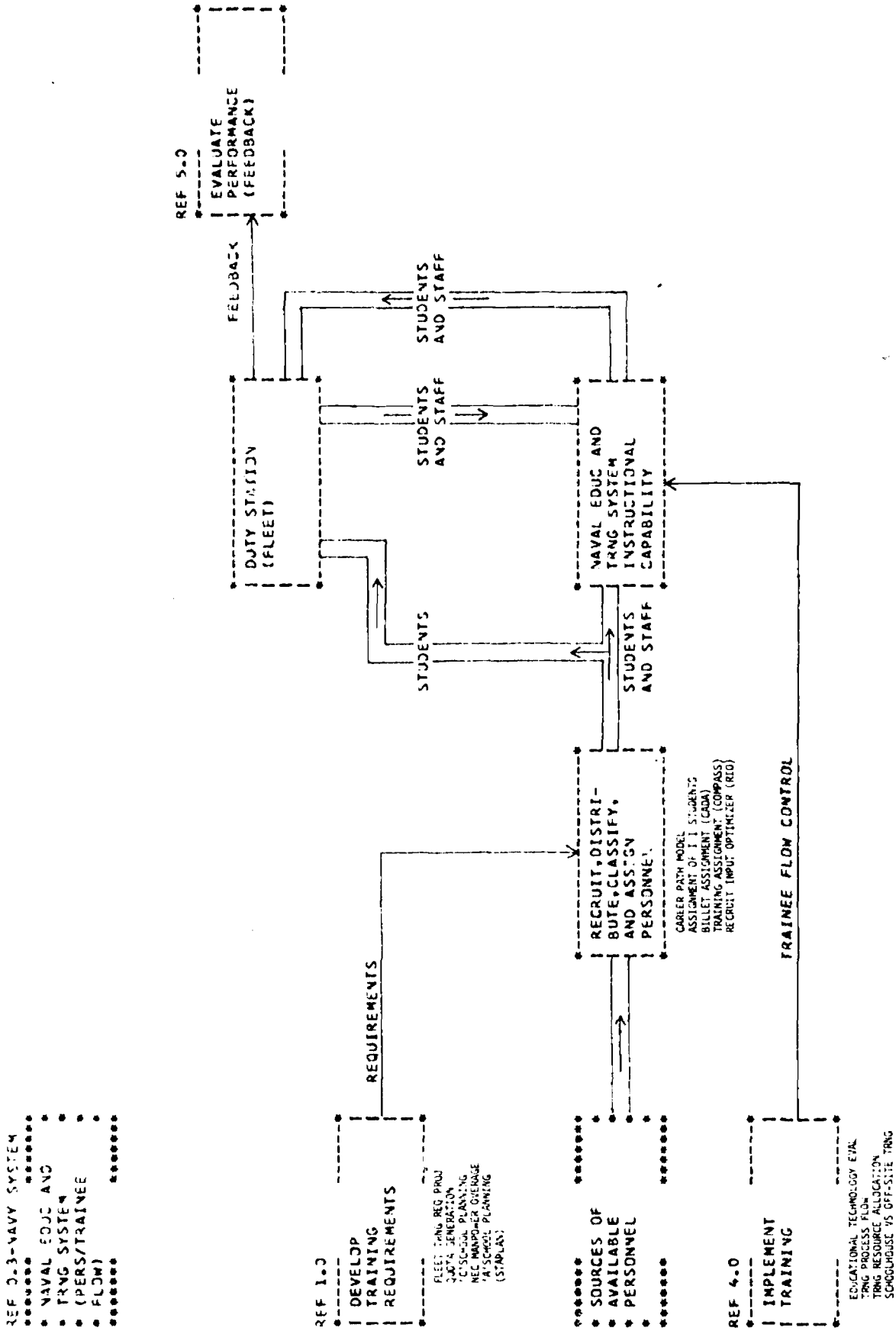

FIGURE VII 2—NAVAL EDUCATION AND TRAINING SYSTEM (PERSONNEL/TRAINEE FLOW)

As stated in the Phase II Management Support Plan, all candidates meet the following general criteria:

1. The projected models should be feasible so that an early failure does not preclude continued efforts to improve the training system.

2. The models should address existing problems so their practicality can be demonstrated.

3. The models should be oriented toward problems which are unique to the training system so as to avoid duplicating models already in use for personnel or manpower management.

The goal of the selection task then is to determine on the basis of current information which of the candidates best meet the above stated criteria.

The candidate list presented in Section VII C represents the result of surveying many potential model users at the functional command level (within CNET) as well as several activities. Application of the survey interview technique provided the study team with a cross-section of both immediate and long-term problems experienced by each command. The candidate list was prepared based on these data together with an analysis of the functional flows described in Section VI.

More specific criteria were generated based on the general criteria noted above. Because the candidate modeling areas have not been developed in sufficient detail to allow evaluation in terms of manpower, dollars, and effort, the candidates were subjectively evaluated in terms of risk factors and potential benefit based on the criteria described in Section VII E.

C. CANDIDATE MODELING AREA DESCRIPTIONS

The following list of candidate modeling areas and their respective descriptions were reviewed and approved by both the Navy Project Office and the Navy Working Group. No additions or deletions were made to the original candidate list which was submitted in the Phase I Preliminary Report.

1. Training System Capabilities/Requirements

A model to analyze the training requirements in terms of system capability would be based on a detailed training system inventory

in terms of facilities, equipment, and materials organized by course/type of instruction as well as an analysis which determines the requirements for facilities, etc., as a function of student enrollment on a course basis. The objective of this model is to assess the feasibility of meeting annual training requirements in terms of desired school throughput as well as to evaluate alternative implementation plans and their effect on the total training organization. Data base requirements for this model type would be met to a large extent by NITRAS (Navy Integrated Training and Resources Administration System) and CENTRA (Centralized Training Material Management Subsystem) -- both of which are currently under development.

2. Training Resource Allocation

This model type is closely related to the Training System Capabilities model discussed above, but will be designed to operate on a more detailed basis at a lower organizational level. The model will primarily address instructor billet utilization at the school level as a function of training requirements. Various strategies to modify the existing operational training plan will be evaluated by the model in an attempt to determine the optimum strategy. As with the Training System Capabilities model, some portion of the data requirements may be fulfilled by NITRAS and CENTRA.

3. Management of Congressional AOB Training Ceilings

The Congressional AOB Training Ceiling Management model will interface with NITRAS to maintain current AOB counts by training category and organizational level. These data will be used to project potential problem areas with sufficient lead time to implement solution strategies. The model can be designed to test the effect of implementing various training strategies.

4. Budget Analysis Model

The objective of this model would be to compare the base data used to compute budget projections with actual data for the purpose of identifying major areas contributing to the overall deviation of the actual from the projected budget. This model would be implemented at the DNET level to explain past budget deviations as well as to defend budget projections.

5. School Planning Model

Because of changes in personnel attrition, operational commitments and overall personnel management policy, Fleet requirements for skilled personnel can often change unpredictably.

Since a large portion of "C" school entrants come directly from "A" School, "C" school planning must be coordinated with "A" school planning as well as with Fleet requirements. "C" school planning is presently handled by BUPERS using a manual process. The proposed model would attempt to determine the relationship between all independent variables influencing all "C" school requirements. A potential outgrowth of this modeling endeavor is the modification of current "A" school planning techniques to incorporate "C" school requirements. The "C" school planning model would interface with portions of the Advancement, Strength and Training Plans (ADSTAP) System as well as with one or more modules of NAVTIS (Naval Training Information System).

6. Aviation Training Management/Planning System

The objective of this effort would be to utilize the data contained in NATIS (Naval Aviation Training Information Systems), which is currently being developed as part of NAVTIS, to construct a system which would dynamically schedule all aviation training. The Management/Scheduling System would consider variables associated with students, instructors, and equipment, including simulators and aircraft. A planning system based on NATIS and the management system would also be developed. The planning model would project the effect of quantitative changes in variables on training throughput rate. The model could also be developed to project required modification to the existing training system to meet a specified Pilot Training Rate (PTR).

7. Optimal School Location Model

A model would be developed to evaluate the effectiveness, in terms of training and cost, of consolidating or expanding training locations. Locations of school consolidations could then be optimally determined in terms of major parameters such as travel distance. An analysis resulting in the identification and definition of optimization parameters would be performed in conjunction with the modeling effort.

8. Educational Technology Evaluation Model

This system of models would be used to perform educational technology trade-off analyses at the school level. Variables which determine the cost of training based on the utilization of various educational strategies (classroom lockstep, instructor managed instruction, computer managed instruction, computer assisted instruction) would be identified and used to compute factors such as the number of students for which the costs associated with two alternate strategies are equal to the savings per additional student over the breakeven number, cost per

student hour per strategy, etc. Additional consideration would be given to specification of equipment requirements for computer based systems. Also included within this system would be a model to evaluate the effectiveness of centralized versus decentralized computer installation for computer based media.

9. Course Costing Model

Although model definition and data collection may represent a major portion of the total modeling effort, the Course Costing model would have application in several areas. The model could be used to determine the relationship between student/course load and the total operating budget at various organizational levels. An optimal student/course loading could be established as a function of budget or physical (facilities, equipment) constraints. The Course Costing model could also be used in conjunction with the Educational Technology Evaluation model. The Course Costing model would also interact with the Training System Capability model in that suggested optimal loading may require a modification of the existing system configuration which in turn may impact system capacities.

10. Fleet Training Requirements Projection Model

Considering all types of naval training, from preparatory to basic ("A" school), advanced ("B" school), specialized ("C" school), and Fleet training, and the many sources from which trainees are derived, Fleet input to specialized and Fleet training courses is perhaps the most difficult to project - even on a short-term basis. This is not surprising, considering the large number of variables involved. Among the more important variables which need to be considered are the Fleet deployment schedules, individual ship manning documents, level of ship's manning, ship's equipment, applicable training courses including schedules and locations, the level of training achieved by current ship personnel, rotation schedules, etc. The Fleet Training Requirements Projection model would significantly improve planning capabilities at the school level, since projection of Fleet input represents a major deficiency in total school planning.

11. Quota Generation Model

Identification of training requirements can be viewed from two different points of view. The Fleet Training Requirements Projection model would be utilized to protect a portion of total school input currently labeled "unprogrammed training" requirements. Training requirements can also be viewed as a requirement to pro-

duce a certain number of graduates of a certain type during a given time. Or, in other words, projection of required school output. Requirements for the latter case can be further subdivided into two areas: (1) training to meet new system/equipment requirements; and (2) force maintenance training requirements. As a result of Training Plan Conferences, comparisons with training requirements for similar equipments, ship's manning documents, etc., a new weapons system will generate a quota in terms of required NEC's which the training system must meet. A Quota Generation model would use these data in conjunction with the operational delivery schedule for the weapons system to provide a time based projection of required output from the training system.

12. Career Path Model

The career path of the naval enlisted man is determined by a number of decision points such as promotions, training received, and assigned billets. The criteria governing these decision points are often unrelated and even where they are related they may be applied by different organizations and at different times.

For example: whether a man undergoes a particular type of training may be determined by his assignment to a new billet and the accompanying Permanent Change of Station (PCS). However, assignment to a particular billet is a function of his rate, but promotions (and hence rate) are determined by another set of criteria applied independently. Consequently, attempting to analyze or predict the results of a change in career structure requires study of more than one functional entity. Career structure changes can be studied either by replicating the system as it exists or by assuming an integrated system.

A decision-tree type model depicting movement of individuals through the system could be constructed to evaluate the merit of present or proposed career structures. The model could be designed to reflect current assignment and promotion policies or to evaluate the system impact of modifying any of the current policies. Career path definition could represent a major portion of the total model development effort.

13. Training Process Flow Models

The title attached to this type of model provides an accurate literal description of its objective, the study of the flow of trainees through the naval training process. The design of a specific process flow model, however, must be oriented toward the solution of one or more problems which may either exist in a current system or are to be avoided in the design of a new system.

For example, a process flow model of a specific school could be used to analyze the relationship between the school throughput rate, course structuring, equipment quantities and utilization, student arrival rates, etc. Once the relations between these variables are known it would be possible to design the training process to produce the desired annual school output while minimizing required equipment quantities and maximizing utilization, as well as meeting other specified constraints.

Another process flow candidate model could be termed a generalized process flow model. Its objectives are similar to those of the specific school model discussed above, but the model flow is generalized to the extent that detailed design analysis could be performed for many schools. The model would be designed such that individual schools are described in terms of student inputs, course structures, equipment requirements, and other descriptive parameters, which comprise the total data input to the generalized flow model.

As an alternative to modeling the flow of individuals through a particular school, an aggregate flow model would be used to study the flow of groups of trainees through several schools, from recruit training through rating achievement. Although not as specific as the entity flow model, many of the same type of questions can be answered through the implementation of the aggregate flow model.

14. Management of Fixed Resources Model

Although related to the Training System Capabilities model, the objective of the Fixed Resource model is to analyze and manage the fixed resources such as facilities and equipment, required to meet training needs during periods of increasing and decreasing training requirements. The data base requirements for this model would be nearly identical to the Training System Capabilities model. The model would measure the impact of contracting or expanding fixed training resources upon the total training system.

15. Schoolhouse Training versus Off-Site Training

Off-site training refers to training in a location other than the traditional schoolhouse (i.e., shore-based or shipboard). The training concept would be the same as computer managed instruction, except that the students would not congregate at a central location. Instruction utilizing a type of self-paced instruction would be controlled via a telecommunication terminal linked to a centrally located computer complex. The objective of the candidate

is to determine the hardware required to implement off-site training and then determine the merit of the technique relative to schoolhouse training in terms of both cost and the effectiveness of training received.

16. Minimum Level of Training

It is felt that some of the training administered by the Navy could be reduced or eliminated while still maintaining a skill level sufficient to meet the Navy's operational needs. An analysis to determine the minimum amount of training required for Navy personnel for each rate and rating should be performed. The results of this study could then be transferred to the Training Process Flow and Training Resource Allocation models to determine an optimum implementation plan for the indicated training system modifications.

17. Training/Billet Assignment System for Students Completing Individualized Instruction Curriculum

With the advent of individualized/self-paced courses of instruction, graduation dates can no longer be established with absolute certainty. Unless a student is reassigned as soon as possible after graduation, many of the benefits gained through individualized instruction will be lost. A student who has completed the prescribed course of instruction but has not been reassigned may, while he remains idle between assignments, deprive another potential student of a slot in that school and/or the billet to which he will eventually be assigned will remain unfilled. The objective of this analysis would be to design and implement an assignment system which is compatible with self-paced training techniques.

18. Permanent Change of Station (PCS)/Temporary Additional Duty (TAD) Budget Impact on Training

Since most training assignments require either PCS or TAD funds to get the student to the training site, an analysis should be performed to determine what effect PCS and TAD fund limitation has on the overall training effort. The results of this analysis would represent a major segment of the analysis required to construct the Optimal School Location model. The initial task to be performed in the location model is to identify the variables to be optimized by the selection of a school site.

19. Training Objective Analysis

The major question to be addressed by this analysis is: should training be performed solely to achieve Fleet performance or

also as an incentive for enlistment or reenlistment? The study would also cover such areas as the effectiveness of training as a reenlistment incentive, comparison of training specifically performed as an enticement to reenlistment with training to increase Fleet performance, and costs of such training.

20. NEC Manpower Overage

The objective of this analysis is to design and implement a technique for handling manpower overages within an NEC. Among the options to be assessed in terms of both cost and training effectiveness are removal of manpower overage and retraining for a related NEC or, forget about NEC overage and underutilize personnel.

21. Physics of Learning

The Learning Process model would attempt to determine the relationship between training media and the learning rate of the student. The major obstacle to be overcome in the development of this model is the paucity of data required to establish the relationships.

D. CANDIDATE SELECTION CRITERIA

Three general criteria for candidate model selection were specified in Section VII B. These three general criteria formed the basis for the list of specific criteria against which each of the candidates was evaluated. The first general criterion states that:

1. The projected models should be feasible so that an early failure does not preclude continued efforts to improve the training system.

Four of the selection criteria have been designed to insure that the selected candidate represents a feasible modeling task. These four include:

Model development effort

Model application/verification effort

Technique availability

Data availability

As explained in the individual criterion descriptions, a higher ranking in these four criteria indicates a higher degree of feasibility.

The second general criterion states that:

2. The models should address existing problems so their practicality can be demonstrated.

Because of the approach used to identify the candidate models (i.e., the functional level survey interview), all candidates represent existing problems and hence their benefit to the training organization can be demonstrated immediately upon implementation. Also an estimate of the relative potential benefit to be derived from each model application was made as a part of the candidate evaluation.

And finally the third general criterion in Section B states:

3. The models should be oriented toward problems which are unique to the training system so as to avoid duplicating models already in use for personnel or manpower management.

The criteria entitled Project Definition is aimed at identifying functional responsibility for each of the candidate areas. All candidates are functionally oriented toward training; however, training functions related to personnel or manpower management are performed within BUPERS. A high rating under this criterion indicates a problem area unique to the training system as well as one which has not been actively pursued by the training organization.

E. CRITERIA DESCRIPTIONS

1. Design of Training System Project Definition

Since some training system functions, i.e., training requirements generation and school assignment, are performed under the Chief of Naval Personnel, the objective of this criterion is to establish whether the candidate model development falls under the jurisdiction of CHNAVPERS or CNET. Also considered in conjunction with the project definition criterion is the current state of development of the candidate area. Several of the candidate models are under various stages of development within current Navy projects. The candidates are classified on a continuous scale on the basis of the following completion states:

HIGH	New effort
	Navy project - conceptual stage
	Navy project - data base development stages
LOW	Navy project - model development stage

Thus a candidate will receive a high rating of 9 if it represents a new project completely within the domain of CNET.

2. Model Application Time Span

An attempt has been made to assess the time span over which the candidate may remain operational without excessive modification. Also considered in the time span rating is the expected utilization frequency of the candidate model. The objective of this criterion is to differentiate between those models designed primarily to perform a one-time evaluation or trade-off analysis (rating = 1) versus those models which could be utilized on a nearly continuous basis through 1980 (rating = 9).

3. Benefit Potential

A major consideration in the identification of a modeling application should be the savings which could be realized through the development and implementation of the selected model. Since it is difficult at this point to identify specific savings in terms of dollars, all candidates have been rated on a scale of 1 - 9 as to their potential benefit to the Navy training organization. Several variables were considered in arriving at the final rating. As a yardstick to measure relative potential of each candidate, an attempt was made, when possible, to estimate the percent of the training population addressed by the candidate. Also, an estimate of the percent of the total training budget addressed by each candidate was considered in conjunction with the population figure, since the cost of equipment and facilities varies greatly for the various types of training. Finally an attempt was made to estimate the training organizations' relative requirement for each of the candidate models based on the descriptive functional model described in Section VI and observations of the study team. A rating of 9 represents both a high savings potential and a high requirement estimate.

4. Organizational Level

The organizational level, i.e., CNET, functional, or activity, which will benefit from the development of each candidate model was taken into consideration in rating this criterion. In some cases a single model or simple modifications of that model may benefit several levels of training management. A high correlation should exist between organizational level and savings potential, in that decisions made at higher management levels will generally impact a larger portion of the total training budget or of the total training population. Thus models designed to assist in management decisions at several organizational levels received the highest

rating. Models to be implemented at the CNET level received the next highest rating, while models to be implemented at the lower echelon level received the lowest rating.

5. Technique Availability

Availability of a modeling technique is a highly significant criterion. If a technique does not exist to design and develop a candidate model (rating = 1) that candidate should be removed from consideration for near term development. Given that a technique does exist for model development, then the rating reflects an assessment of the risk involved in successfully utilizing the unmodified technique.

6. Data Base Availability

The data base criterion can be subdivided into four categories: data available-computer source; data available-flat paper source; data base currently under development, e.g., Integrated Flight Training Information System (IFTIS), Navy Integrated Training and Resources Administration System (NITRAS); and data not available. The rating was assessed on a continuous scale of 1 to 9 with a totally computerized data source available = 9 and nonexistent data = 1. A candidate model could be excluded from further consideration only if the required data base does not exist. Even then, if the candidate was ranked relatively high on the basis of the remaining criteria, development of a data base may be warranted in conjunction with model definition and development or the data base development could be pursued as a separate project.

7. Projected Model Development Effort

Unless the projected development effort is much larger than that allowed by the project time frame, this criterion cannot eliminate a candidate model from development consideration. If the candidate is favorably assessed on the basis of the preceding criteria, the value of this criterion lies in the control of the scope of development. Rather than eliminate the candidate from consideration, a more prudent decision would be to modify the scope to match the available time. This criterion was rated on a scale of 1 to 9 representing a risk assessment of the potential for completing the development effort (without seriously modifying initial scope) within the project time frame. A rating of 9 indicates no risk; a rating of 1 indicates a high risk.

8. Projected Model Application/Verification Effort

The effort associated with applying the developed model to a real-world problem, including any effort associated with maintaining or compiling the required data base, and verifying the results of the application has been separated from the model development effort. The purpose of rating these efforts separately is that,

in several cases, development effort is projected to be relatively low risk while application and verification effort could be a high risk effort. The reverse could also be true, that is, the model development is expected to be a complex task and, therefore, high risk, while the application of the model, once it is developed, is anticipated to be straightforward with no complications foreseen. Application/verification effort will be rated for each candidate based on the same scale used to assess the development effort.

9. Model Objective

For the purpose of this evaluation, model objective is divided into two areas: training system development or those models whose major objective is to evaluate alternate courses of training system development; and management systems whose goal is to assist managers in the decision making process associated with the operation and planning of the training system. These two objectives are not necessarily mutually exclusive. A candidate may achieve both objectives or either one individually. No attempt will be made to associate a rating with individual objective achievement at this time; however, a candidate achieving both objectives will be rated as more desirable than one meeting only one of the two objectives.

F. CANDIDATE EVALUATION

Using the candidate and criteria descriptions, all candidates were evaluated by each member of the Phase II study team. After the individual evaluations were complete, the results were discussed, modifications made, and the ratings were compiled to form the composite study team candidate evaluation shown in Table VII 1.

Since the range of total ratings for the seven top ranked candidates was very small, it was decided to remove the fourteen lowest ranked candidates from modeling consideration within the Design of Training Systems project. Following the initial ranking of the candidate models, both the selection criteria and the remaining candidate models were discussed. The top seven candidates were then reevaluated to determine the final rankings. As a result of the reevaluation the final rankings of the top seven candidates differ from the initial rankings of these same models. The results of the reevaluation are shown in Tables VII 2 through VII 8.

A summary of the major reasons for rejecting the fourteen lowest ranked candidates is presented.

CANDIDATE MODEL	PROJECT DEFINITION	ORGANIZATIONAL LEVEL	BENEFIT POTENTIAL	APPLICATION TIME SPAN	MODEL DEVELOPMENT EFFORT	MODEL APPLICATION/ VERIFICATION EFFORT	TECHNIQUE AVAILABLE	DATA AVAILABLE	MODEL OBJECTIVE	* TOTAL SCORE	(RANK)
SYSTEM CAPABILITY/REQUIREMENTS	9	8	8	9	8	4	8	6	MS*	58	(2)
MGMT OF AOB TRNG CEILINGS	7	8	7	7	8	6	7	6	MS	56	(3)
BUDGET ANALYSIS MODEL	5	8	5	7	8	7	8	8	MS	56	(3)
C-SCHOOL PLANNING MODEL	5	6	5	8	6	5	6	6	MS	47	(12)
AVIATION TRNG MGMT/PLANNING	5	6	7	9	7	6	8	8	MS	56	(3)
OPTIMAL SCHOOL LOCATION MODEL	5	8	4	5	8	4	8	5	MS	47	(12)
EDUCATIONAL TECH EVALUATION	9	6	7	7	8	5	7	6	SD**	55	(7)
COURSE COSTING MODEL	6	6	7	7	7	5	7	5	MS	50	(9)
FLEET TRNG REQ PROJECTION	8	6	6	8	5	5	6	5	MS	49	(10)
QUOTA GENERATION MODEL	5	7	6	7	6	5	6	6	MS	48	(11)
CAREER PATH MODEL	5	8	5	6	4	5	4	4	MS	41	(15)
TRAINEE PROCESS FLOW MODEL	9	6	8	9	8	7	8	6	SD/MS	61	(1)
FIXED RESOURCE MGMT MODEL	7	7	5	8	6	5	7	6	MS	51	(8)
TRAINING RESOURCE ALLOCATION	8	7	7	8	7	5	8	6	MS	56	(3)
SCHOOLHOUSE TRNG VS OFF-SITE TRNG	5	6	6	3	4	3	7	2	SD	36	(18)
MINIMUM LEVEL OF TRAINING	5	5	5	2	4	3	7	3	SD	34	(20)
ACHIEVEMENT SYS FOR SELF-PACED CURR	4	5	4	5	6	5	7	7	MS	43	(14)
TRS TARGET IMPACT ON TRNG	4	6	4	2	5	4	7	5	MS	37	(17)
TRAINING OBJECTIVE ANALYSIS	5	5	4	2	5	4	6	5	SD	36	(18)
MANPOWER OVERAGE	4	4	3	3	4	4	6	6	MS	34	(20)
PROCESS OF LEARNING	8	5	8	6	4	3	4	2	SD	40	(16)

* Management of Training Systems

** Training Systems Development

TABLE VII 1 - PRELIMINARY CANDIDATE MODEL EVALUATION

Candidate	Rejected Because
"C" School Planning	"C" school planning is currently a BUPERS function and, therefore, outside the realm of CNET. Also, the problem is being investigated by researchers at NPRDC in San Diego.
Optimal School Location	It was assumed that the location model would be used very infrequently. There is also a high probability that each application will be highly specialized. It seems to be more practical to apply linear programming techniques to relocation problems as they arise.
Course Costing	The major effort required to implement a Course Costing model would be the establishment of a course cost data system. Also a technique for course costing is currently being developed at CNTECHTRA.
Fleet Training Requirements Projection	A Fleet Training Requirements Projection model is currently being considered for development as part of TRAPS (Training Requirements and Planning Subsystem) which is one of eight modules of NAVTIS (Naval Training Information System). Also, because of the problem complexity, the risk in constructing a model which would accurately represent the Fleet training process is rated fairly high.
Quota Generation	Time based projections of required output from the training system as a result of new equipment or equipment modifications are generated primarily by the SYSCOMS and OP 29, 39, or 59 and thus falls outside the domain of CNET. The problem of quota generation is also related to the Fleet Training Requirements Projection model in that the data requirements are similar. To take advantage of this similarity, the models should be developed concurrently.

Candidate	Rejected Because
Career Path Projection	Although training represents a major factor in career path projection, this problem falls under the domain of BUPERS rather than CNET. The potential benefit to be derived by CNET from a Career Path Projection model is questionable.
Schoolhouse Training vs Off-Site Training Minimum Level of Training Assignment System for Self-Paced Study PCS Budget Impact on Training Training Objective Analysis NEC Manpower Overage Physics of Learning	These candidates were all eliminated from modeling consideration because they represent questions that could be answered as a result of performing a single evaluative analysis. Some of these questions represent alternatives which could be evaluated through application of other candidate models, i.e., Educational Technology Evaluation model. However, the importance of performing these analyses should not be minimized. It is, therefore, recommended that these analyses be performed within the training organization rather than as part of this contract.

CANDIDATE: TRAINING PROCESS FLOW MODEL

CRITERIA	RATING	COMMENT
PROJECT DEFINITION	9	Model represents an R&D effort within CNET domain
ORGANIZATIONAL LEVEL	7	Versatility of approach permits application at most levels with possible exception of CNET
BENEFIT POTENTIAL	7	Estimated highest potential relative to remaining six candidate models
APPLICATION TIME SPAN	8	Long-range application anticipated; frequency of use rated high
DEVELOPMENT EFFORT	6	Medium/low project completion risk; this risk can be controlled through modification of scope of model development effort
APPLICATION/VERIFICATION EFFORT	6	
TECHNIQUE AVAILABILITY	7	Most probable technique will be computer simulation; language may be GPSS depending on level of detail simulated
DATA BASE AVAILABILITY	5	Portion of data to be generated in parallel with model development
MODEL OBJECTIVE		Management of training system/training system development
TOTAL RATING	55	
RANK	1	

TABLE VII 2 - TRAINING PROCESS FLOW MODEL
PRELIMINARY EVALUATION

CANDIDATE: EDUCATIONAL TECHNOLOGY EVALUATION MODEL

CRITERIA	RATING	COMMENT
PROJECT DEFINITION	9	Model represents an R&D effort within CNET domain
ORGANIZATIONAL LEVEL	7	Application at functional command and school levels; results should impact decisions relative to educational technology throughout NETS
BENEFIT POTENTIAL	6	Estimated potential rated 2nd highest relative to remaining six candidates
APPLICATION TIME SPAN	6	Model concept has long-range potential; algorithms may require updating to reflect latest technology
DEVELOPMENT EFFORT	6	Medium risk of completion within project time frame
APPLICATION/VERIFICATION EFFORT	6	Application of techniques, algorithms, models, and perhaps data from IBM Field Engineering experience in field of education lowers risk factor in these areas.
TECHNIQUE AVAILABILITY	7	
DATA BASE AVAILABILITY	5	
MODEL OBJECTIVE		Training system development
TOTAL RATING	52	
RANK	2	

TABLE VII 3 - EDUCATION TECHNOLOGY EVALUATION MODEL PRELIMINARY EVALUATION

CANDIDATE: SYSTEM CAPABILITY/REQUIREMENTS MODEL

CRITERIA	RATING	COMMENT
PROJECT DEFINITION	8	Definitely a CNET application; prior effort expended on development of basic approach by Navy
ORGANIZATIONAL LEVEL	7	Some use at CNET level; more analysis at functional level
BENEFIT POTENTIAL	7	Difficult to assess; facilities and equipment oriented - medium/high potential estimated
APPLICATION TIME SPAN	7	High probability of long-range application; frequency unknown - estimated at low/medium
DEVELOPMENT EFFORT	6	Medium risk of completion within project time frame
APPLICATION/VERIFICATION EFFORT	4	Difficulty arises from volume of data required for task
TECHNIQUE AVAILABILITY	6	Medium/low risk of applying existing techniques
DATA BASE AVAILABILITY	5	Most data available; combination of manual and computerized sources; conceptual development of computerized data system exists
MODEL OBJECTIVE		Management of training system
TOTAL RATING	50	
RANK	3	

TABLE VII 4 - SYSTEM CAPABILITY/REQUIREMENTS MODEL PRELIMINARY EVALUATION

CANDIDATE: TRAINING RESOURCE ALLOCATION MODEL

CRITERIA	RATING	COMMENT
PROJECT DEFINITION	8	Definitely a CNET application. Some efforts along these lines already exist
ORGANIZATIONAL LEVEL	6	Application at functional and activity level
BENEFIT POTENTIAL	6	Rated 2nd highest relative to remaining six candidates
APPLICATION TIME SPAN	7	High potential of long-range application; utilization rate a function of rate of training plan modifications
DEVELOPMENT EFFORT	6	Medium risk of completion within project time frame
APPLICATION/VERIFICATION EFFORT	4	Volume of data to be applied and verified increases risk
TECHNIQUE AVAILABILITY	6	Medium/low risk of applying existing technique
DATA BASE AVAILABILITY	5	Most data available: combination of manual and computerized sources
MODEL OBJECTIVE		Management of training system
TOTAL RATING	48	
RANK	4	

TABLE VII 5 - TRAINING RESOURCE ALLOCATION MODEL PRELIMINARY EVALUATION

CANDIDATE: AVIATION TRAINING MANAGEMENT/PLANNING

CRITERIA	RATING	COMMENT
PROJECT DEFINITION	5	Task calls for extension and improvement to data base and modeling efforts already initiated at CNATRA
ORGANIZATIONAL LEVEL	5	Application at CNATRA only
BENEFIT POTENTIAL	7	An effective system has relatively high potential because of cost of aviation training
APPLICATION TIME SPAN	7	Long-range application projected
DEVELOPMENT EFFORT	6	
APPLICATION/VERIFICATION EFFORT	6	Only a portion of required effort could be scheduled for completion during project time frame; also a function of telecommunication equipment acquisition
TECHNIQUE AVAILABILITY	5	A function of degree or sophistication of models and application
DATA BASE AVAILABILITY	6	Much of data should be available through IFTIS
MODEL OBJECTIVE		Management of training system
TOTAL RATING	48	
RANK	5	

TABLE VII 6 - AVIATION TRAINING MANAGEMENT/PLANNING MODEL PRELIMINARY EVALUATION

CANDIDATE: MANAGEMENT OF CONGRESSIONAL AOB CEILINGS

CRITERIA	RATING	COMMENT
PROJECT DEFINITION	7	Model should be pursued within CNET; however, projected model is not seen to influence training system design
ORGANIZATIONAL LEVEL	7	Primary use at CNET level; potential use at lower levels a model design parameter
BENEFIT POTENTIAL	5	Potential benefit to CNET rated low relative to other six candidates
APPLICATION TIME SPAN	6	Can be utilized for duration of Congressional requirement (duration currently unknown)
DEVELOPMENT EFFORT	5	Medium risk of completion within project time frame
APPLICATION/VERIFICATION EFFORT	5	Application/verification risk level rated equal to development risk
TECHNIQUE AVAILABILITY	5	Medium risk of applying existing techniques; portion of data may be available from NITRAS
DATA BASE AVAILABILITY	6	Total data requirements unknown
MODEL OBJECTIVE		Management of training system
TOTAL RATING	46	
RANK	6	

TABLE VII 7 - MANAGEMENT OF CONGRESSIONAL AOB CEILINGS MODEL PRELIMINARY EVALUATION

CANDIDATE: BUDGET ANALYSIS MODEL

CRITERIA	RATING	COMMENT
PROJECT DEFINITION	4	Not an R&D effort
ORGANIZATIONAL LEVEL	7	Utilized primarily at DNET
BENEFIT POTENTIAL	4	Lowest relative potential
APPLICATION TIME SPAN	5	Medium-range application
DEVELOPMENT EFFORT	7	Technique development is low risk effort
APPLICATION/VERIFICATION EFFORT	5	Application/verification effort rated medium risk
TECHNIQUE AVAILABILITY	7	Low risk of applying existing techniques
DATA BASE AVAILABILITY	6	Most data should be available on flat paper
MODEL OBJECTIVE		Management of training system
TOTAL RATING	45	
RANK	7	

TABLE VII 8 - BUDGET ANALYSIS MODEL PRELIMINARY EVALUATION

The preceding evaluations are based on current concepts of potential development and application of the candidate models. These evaluations and the resultant ranking of the candidate models may be altered as a result of an analysis of the completed NETS functional flow model and as a result of further investigation and development of the top ranked candidates.

The list of seven candidate models was submitted for review by the functional commands under CNET. Comments on both candidate model rankings and possible areas of application were solicited.

The response indicated general agreement with the rankings of the candidate models. Table VII 9 shows a comparison of the rankings of the top seven candidates as it appears in the Phase I Report and as they were ranked by the functional commands. Since the difference in rankings was so slight, those suggested by the functional commands can be adopted without further discussion.

IBM	FUNCTIONAL COMMANDS
1. Training Process Flow	1. Training Process Flow
2. Educational Technology Evaluation	2. Educational Technology Evaluation
3. System Capabilities/ Requirements	3. System Capabilities/Requirements
4. Training Resource Allocation	4. Training Resource Allocation
5. Aviation Training Management/Planning	5. Budget Analysis
6. Management of Congressional AOB Ceilings	6. Aviation Training Management/ Planning
7. Budget Analysis	7. Management of Congressional AOB Ceilings

COMPARATIVE MODEL RANKINGS

TABLE VII 9

THIS PAGE INTENTIONALLY LEFT BLANK

G. DESCRIPTION OF SELECTED MODELS

As a result of the evaluation procedure described in Section VII F, the following models have been selected for further development:

- o Educational Technology Evaluation
- o Training Process Flow
- o System Capabilities/Requirements
- o Training Resource Allocation.

The discussion of the model types in Section VII C indicates that the System Capabilities/Requirements model and the Training Resource Allocation model are similar in type, with the Training Resource Allocation model addressing a more detailed level of the same basic problem. For this reason, the System Capabilities/Requirements model and the Training Resource Allocation model will be developed as a single model addressing both aspects of the training system output vs training system configuration problem. This composite model has been designated the System Capabilities/Requirements and Resources (SCRR) model.

All three of the models projected for further development are related in that each can provide inputs to the others. On the other hand, each model can be used "stand-alone" to address specific problems at specific functional levels.

Figure VII 3 shows the three model types and their interrelationships. Each of the models operates at a different functional level but each may be constrained by, or use data produced as output from, one of the other models.

The models are best defined in terms of the functions within the training system which they replicate and by whether they deal with individual students, groups of students, or system resources such as instructors, classrooms, or other facilities. The models will be described in terms of their internal structure rather than the priority ranking.

1. Educational Technology Evaluation Model

The Educational Technology Evaluation model is an entity flow model. It deals with the movement of individual students through a single course or set of courses. As the name implies, this model is concerned with the effect of instructional strategies and media on the flow of students through a course.

Since it is impossible to predict or to represent, mathematically, the quantitative or qualitative effect of any learning situation

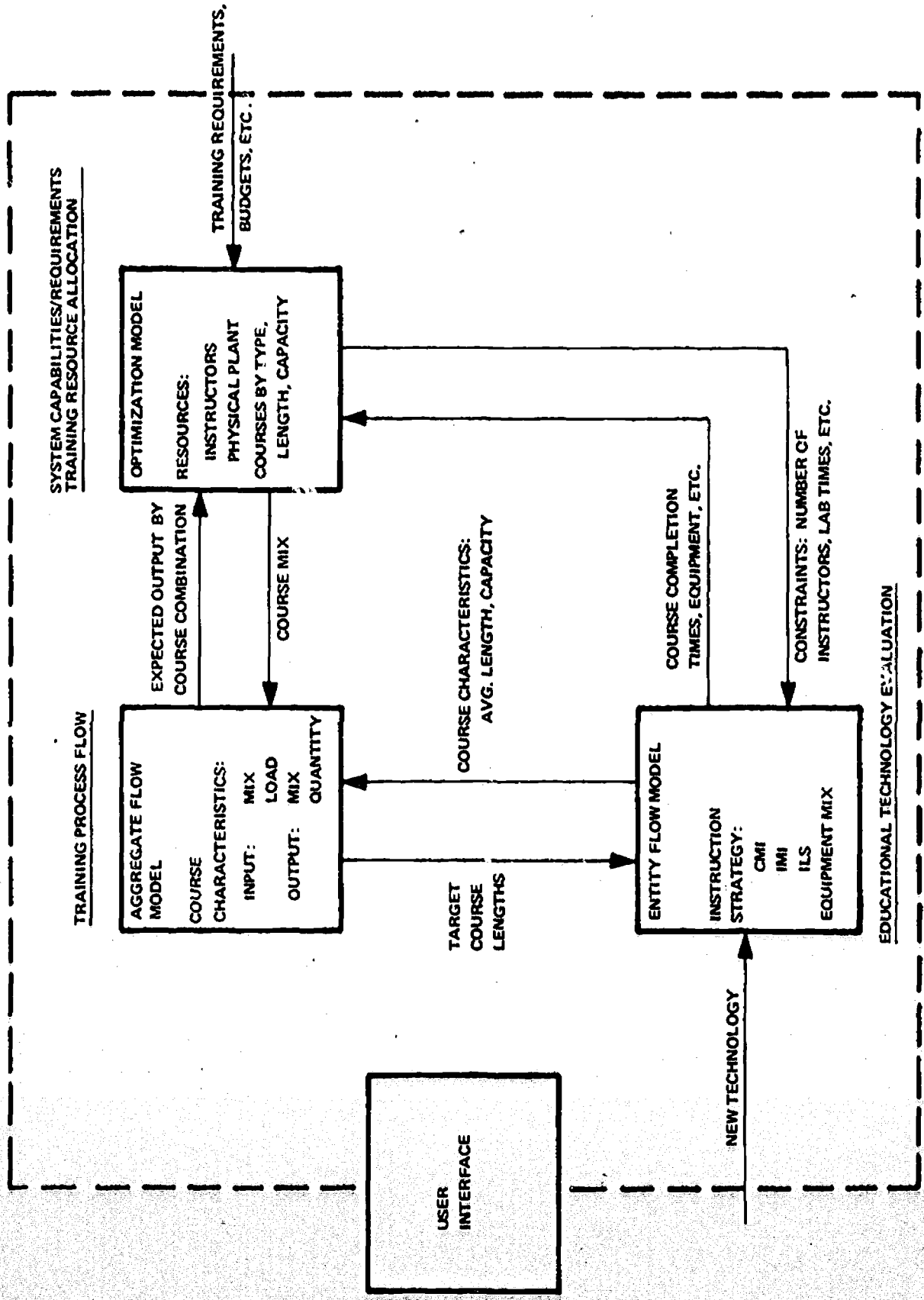

FIGURE VII 3 INTERACTION OF SELECTED MODELS

on the student, the model is restricted to those attributes of the learning situation which can be represented numerically or mathematically.

A model of this type can be constructed to address the following learning system attributes:

a. Media Characteristics

1) Can the student access the module without assistance or must he do so through some agency as a library?

2) Is the module self-contained in that any remedial materials are available within the module?

3) Are other personnel required either in preparation or use of the module? Other personnel include instructors, support personnel (e.g., computer operators), or other students.

4) Are facilities such as telephone lines, power supplies, or specifically equipped carrels required?

b. Module Selection Process

Each student in the model can be given selected attributes that will determine which modules, from the set of available modules, that student is required to complete. Further, the model can reflect different available media for the same module and include media selection rules.

c. Contention for Facilities

Students contend for instructors and facilities. Average waiting times can be determined as a function of student load, equipment type, and number of instructors.

d. Average Time to Complete

Average time to complete for different courses or individual modules can be projected for different student loads, media mixes, and staffing levels.

2. Training Process Flow

Where the Educational Technology Evaluation model deals with the movement of individuals through a course or courses, the Training Process Flow model deals with the movement of groups of students through a collection of courses or schools. The Educational Technology Evaluation model also is intended to address courses

employing uniform educational strategies whereas the Training Process Flow model addresses mixtures of conventional instruction, individualized instruction, and mixed lockstep/individualized.

Wherever possible, the Training Process Flow model employs known or postulated relationships between group attributes and performance. For example, if it is known that students with Basic Qualification Test (BQT) scores below a certain level experience a fifty percent attrition rate for a particular course, this relationship would be employed directly in the Training Process Flow model in projecting course output based on student input characteristics.

The output of the Training Process Flow model is a time-oriented profile of training system output in terms of numbers of trained personnel by type, based upon the characteristics of the incoming students, type of training received, courses available, convening dates, etc. This output represents a composite output from a number of courses or schools receiving a variety of input student types in varying numbers and at varying times.

3. System Capabilities/Requirements and Resources Model

Both the Educational Technology Evaluation model and the Training Process Flow model deal directly with students either individually or collectively. The System Capabilities/Requirements and Resources (SCRR) model is oriented around student support requirements in terms of classrooms, laboratories, instructor billets, and course schedules.

The SCRR model is on the same functional level as the Training Process Flow model in that it is intended to deal with a number of schools and courses being administered by the same organization, but including a variety of course types, class sizes, etc.

The SCRR model also projects system output in terms of people by type and time. However, its primary purpose is to optimize the mix of classrooms, instructors, and class schedules needed to produce a particular output profile. In the initial version of the model, system output (once optimization takes place) will be calculated using class capacity, course length, and convening frequency.

Note that the SCRR model does not attempt to include the effects of attrition or student input profile; being concerned exclusively with available school facilities.

Viewed in the context of a single, large, complex model, the Training Process Flow model performs the same function as the system output calculation in the SCRR model. However, it does this projection in a more sophisticated fashion taking into account more variables and more inter-relationships.

4. Model Interaction

As previously stated, each of the models can provide either input data or constraint data to the other models. For example:

a. The Training Process Flow model is constrained by the mix of courses (length and type) being offered. This information can come from the System Capabilities/Requirements and Resources (SCRR) model or the Educational Technology Evaluation model depending on the type of planning being done. Essentially, the SCRR model determines the configuration of courses and classes which the Training Process Flow model will utilize.

b. The Educational Technology Evaluation model is constrained, in a real-world situation, by the number of instructors and the laboratory space available. These parameters are outputs of the SCRR model.

   Either the Training Process Flow model or the SCRR model could yield results which would indicate the desirability of reducing a certain common course length to some theoretical level. Such a reduced course length could become a constraint in the use of the Education Technology Evaluation model providing a target around which equipment requirements might be optimized.

c. The System Capabilities/Requirements and Resources (SCRR) model requires data as to average time to complete when individualized instead of conventional lockstep instruction is used. Projected average time to complete is an output of the Education Technology Evaluation model. The relationship of the SCRR model and the Training Process Flow model has already been discussed.

5. User Interface

Successful operational use of any mathematical model depends to a great extent on how easy the model is to use. This is particularly true where operational personnel are rotated and the potential user may be unfamiliar with modeling techniques or the models themselves.

Whether the candidate models are easy to use or not is a function of two things: the complexity of the model structure and the program module designated in Figure VII 3 as the user interface.

The user interface program module should provide the following kinds of services:

a. Select which models and which parts of models are to be run.

b. Specify model constraints such as available equipment, number of instructors, etc.

c. Update any data file such as equipment inventory.

d. Specify whether optimization is to take place (assuming this capability exists in the model in question).

While the design of the user interface module must await detailed model specifications, one design goal must be that the interface module provides an interactive capability to the user. When the user specifies changes to the model or its parameters, he should be given verification of the changes requested and, if possible, information concerning any other changes to the basic model which result from the user request.

Unclassified
Security Classification

DOCUMENT CONTROL DATA - R & D

(Security classification of title, body of abstract and indexing annotation must be entered when the overall report is classified)

1. ORIGINATING ACTIVITY (Corporate author)
International Business Machines Corporation
Federal Systems Division, Cape Kennedy Facility
Cape Canaveral, Florida 32920

2a. REPORT SECURITY CLASSIFICATION
Unclassified

2b. GROUP
N/A

3. REPORT TITLE
DESIGN OF TRAINING SYSTEMS, PHASE I FINAL REPORT, Volume I of II

4. DESCRIPTIVE NOTES (Type of report and inclusive dates)
Final Report

5. AUTHOR(S) (First name, middle initial, last name)
Harold J. Bellamy, Lawrence R. Duffy, Albert Elkin, Robert E. Hallman, Ronald E. Yanko

6. REPORT DATE
December 1973

7a. TOTAL NO. OF PAGES
474

7b. NO. OF REFS
-

8a. CONTRACT OR GRANT NO.
N61339-73-C-0097

b. PROJECT NO.

c.

d.

9a. ORIGINATOR'S REPORT NUMBER(S)
IBM-FSD-ESC 73-535-005

9b. OTHER REPORT NO(S) (Any other numbers that may be assigned this report)
TAEG Report No. 12-1, Vol. I

10. DISTRIBUTION STATEMENT
Approved for public release; distribution unlimited.

11. SUPPLEMENTARY NOTES

12. SPONSORING MILITARY ACTIVITY
Naval Training Equipment Center
Training Analysis and Evaluation Group
Orlando, Fla. 32813

13. ABSTRACT
This report presents a functional descriptive model of the current Naval Education and Training System and idealized concepts oriented toward a 1980 time frame. While technological gaps and problem areas are presented, no organizational elements are specified, since the prime areas of interest are the functions performed. In addition, the rationale for selection of candidate mathematical models to be developed in Phase II is given.

Strategic working assumptions for the 1980's are presented in Volume 2 of this report.

The study was performed by IBM for the Training Analysis and Evaluation Group of the Naval Training Equipment Center, Orlando, Florida (Contract No. N61339-73-C-0097).

DD FORM 1 NOV 65 1473 (PAGE 1)
S/N 0102-014-6600

Unclassified
Security Classification

Unclassified
Security Classification

14 KEY WORDS	LINK A ROLE	LINK A WT	LINK B ROLE	LINK B WT	LINK C ROLE	LINK C WT
Training System						
Training Organization Management						
Functional Analysis						
Descriptive Functional Model						
Mathematical Model						
Strategic Assumptions (1980)						

REPORT TITLE AND NO.: DESIGN OF TRAINING SYSTEMS PHASE I REPORT - VOLUME I
TAEG REPORT NO. 12-1.

1. EVALUATION OF REPORT. Please check appropriate column.

FACTORS	RATING			COMMENTS
	LOW	AVG	HIGH	
USEFULNESS OF DATA				
TIMELINESS				
COMPLETENESS				
TECHNICAL ACCURACY				
VALIDITY OF RECOMMENDATIONS				
SOUNDNESS OF APPROACH				
PRESENTATION AND STYLE				
OTHER (Please Explain)				

2. USE OF REPORT. Please fill in answers as appropriate. Use continuation pages as necessary.

HAS THIS REPORT INCREASED YOUR AWARENESS OR SUPPORT OF:

YES NO

( ) ( ) 2.1 Naval training as an organizational entity.

( ) ( ) 2.2 Problems of managing the training community.

( ) ( ) 2.3 Modelling and simulation as management tools.

( ) ( ) 2.4 Technological impact on training.

( ) ( ) 2.5 Financial management of training.

( ) ( ) 2.6 Growth of educational technology.

( ) ( ) 2.7 Need for quality control and feedback to the training process.

( ) ( ) 2.8 Need for training RDT&E in operational environments.

3. PLEASE MAKE ANY GENERAL COMMENTS YOU FEEL WOULD BE HELPFUL IN SUPPORTING THIS RESEARCH EFFORT.

Name: _____ Code: _____

Organization: _____

Address: _____

REPORT USE AND EVALUATION

Feedback from consumers concerning the utilization of reports is a vital element in improving products so that they better respond to specific needs. To assist the Training Analysis and Evaluation Group in future planning, it is requested that the use and evaluation form on the reverse of this page be completed and returned. The page is preaddressed and franked; fold in thirds, seal with tape, and mail.

DEPARTMENT OF THE NAVY
NAVAL TRAINING EQUIPMENT CENTER
ORLANDO, FLORIDA 32813

OFFICIAL BUSINESS

PENALTY FOR PRIVATE USE $300

POSTAGE AND FEES PAID
DEPARTMENT OF THE NAVY
DOD-316

U.S. MAIL

Commanding Officer
Naval Training Equipment Center (Code N-00T)
Orlando, Florida 32813