DOCUMENT RESUME

ED 089 404 EA 005 991

AUTHOR Stepp, Ermel, Jr.
TITLE General Systems Decisions in Educational Development. Revised.
PUB DATE 2 Jan 74
NOTE 37p.; Revised version of ED 080 609

EDRS PRICE MF-$0.75 HC-$1.85 PLUS POSTAGE
DESCRIPTORS Bibliographies; *Decision Making; *Educational Development; Educational Research; Evaluation; Information Utilization; *Systems Approach; *Systems Concepts; Systems Development

ABSTRACT

Effective action in educational development is dependent upon an adequate consideration of requisite variety. An adequate consideration of requisite variety includes a delineation of the information field appropriate for the decisionmaking system. An interaction of the information domain with each state of development, state-set, and whole would enhance decidability. The evaluation of an educational system qua organization requires the delineation, procurement, and provision of information for the reduction of uncertainty in decisionmaking. The theoretical basis for the evaluation model derives from a self-organizing meta-structure of ontogenetic pragmatics. The self-organizing meta-structure includes a supra-ordinate stabilization of syntax and semantics. Two subordinate stabilizations of completability-consistency and controllability-observability are embedded in the self-organizing stabilization. The ontogenetic pragmatics include a stabilization of syntal elements and synergistic relationships in the pragmatic functions of the organization. The pragmatic functions may include policymaking, needs assessment, planning, program development, program implementation, program evaluation, management information system resource management, and environmental relations. The purpose of the evaluation is to facilitate the improvement of general systems decisions in educational development. (Author)

General Systems Decisions in Educational Development

Ermel Stepp, Jr., Ed.D.
Educational Development Specialist
Research and Evaluation Division
Appalachia Educational Laboratory, Inc.
Charleston, West Virginia

January 2, 1974

This paper is a revised version of a paper presented to the annual meeting of the Special Interest Group on Research Management, American Educational Research Association, New Orleans, Louisiana, February, 1973.

Table of Contents

List of Figures

GENERAL SYSTEMS DECISIONS IN EDUCATIONAL DEVELOPMENT

Ermel Stepp, Jr.
Design and Evaluation Specialist
Appalachia Educational Laboratory, Inc.
Charleston, West Virginia 25325

Effective action in educational development is dependent upon an adequate consideration of requisite variety. An adequate consideration of requisite variety includes a delineation of the information field appropriate for the decision-making system. An adequately delineated information field for general systems evaluation attends to the logical duality of incompletability-consistency and the empirical duality of controllability-observability. Incompletability provides the definitive boundary, shifting, and capacity of syntality. Consistency relates the redundancy, multiplexing, and reliability of synergy. Controllability transforms the connectedness, encodability, and ambiguity of synergistic consequents of syntality. Observability is germane to the decipherability, decodability, and equivocation of synergy in adaptive syntal antecedents. Criterion variables, operational indicators, and acceptability levels differentiate this basis of requisite variety in the information universe for general systems decisions on educational research and development. Research management neglects requisite variety in underdetermined planning and evaluation models.

Educational Development

Educational development is a systematic effort to generate and diffuse products to expedite human learning in institutional settings. A rationale for effort is strongly related to change gradients in the contemporary milieu. Marketability has been a salient concern with scant attention to the "world problematique" (Meadows, 1972) and alternative futures in evidence. Policy has been forged by advocacy in an arena of conflict with minimal priorities for the macro system. A resistance to formalization in theoretical and methodological adequacy is manifested in a general politicized climate of mediocre programs. Amelioration of this state of the art may be brought about by algorithmic advocacy addressed to accountability through requisite variety. Anything of lesser stature may be a damage-laden intervention with regression consequences for the macro system and/or the human subjects (Nash, 1973; Sprigle, 1972; Wheeler and King, 1972).

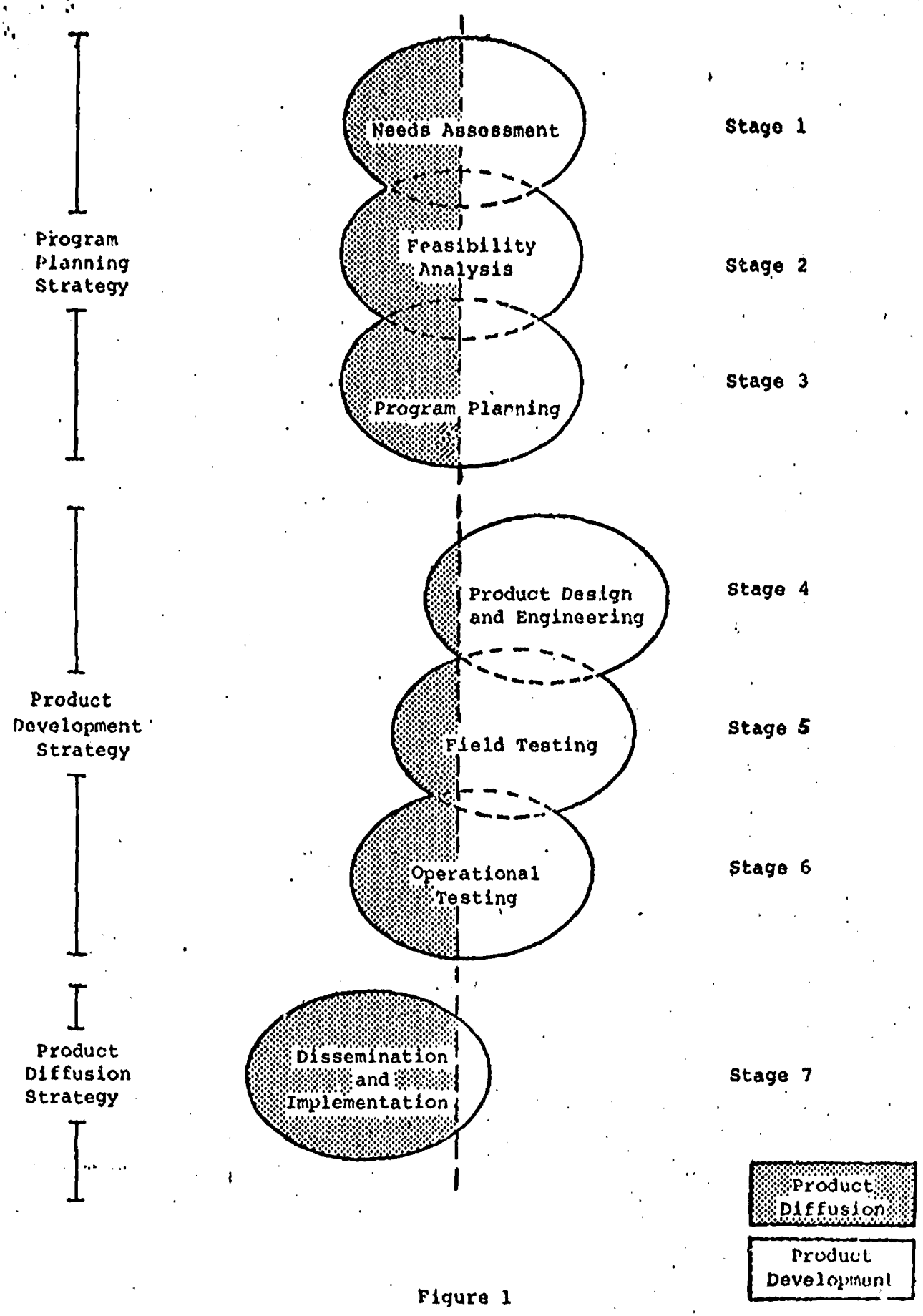

Figure 1

AEL MODEL FOR EDUCATIONAL DEVELOPMENT

The National Institute of Education (NIE) has been organized and invested with a mission to nurture educational R & D. The decision setting for educational development may have a neomobilistic character in engendering large change in a small information field. The decision model for educational development may be that of planned change (Clark and Guba, 1965, 1972). A variant of the planned change paridigm guides the efforts of the Appalachia Educational Laboratory, Inc. (AEL). The AEL model subsets the domain of educational development with concomitant emphases in product development and product diffusion and three linear strategies: product planning strategy, product development strategy, and product diffusion strategy. Each strategy nests at least one of the seven-stages of the paradigm. The product planning strategy subsumes the stages of needs assessment, feasibility analysis, and program planning. The product development strategy subsumes the stages of design and engineering, field testing, and operational testing. The product diffusion strategy includes the state on dissemination and implementation.

Theoretical Basis

The theoretical basis for the evaluation of educational systems is the reduction of uncertainty in decision-making on the system qua organization (Cyert and March, 1963; March and Simon, 1958). Several levels of uncertainty are posited.

- Pragmatic uncertainty pertains to mundane functions.
- Transactional uncertainty pertains to interfacing pragmatic components; and the organization must realize a balance between pragmatics and semantics.
- Semantic uncertainty exists in the controllability and observability of the system; and the organization.

Must realize a balance between the ability to drive the system from given states to desired states and the assignment of fault for failing productivity.

- Self-organizing uncertainty exists in the relationship of syntax to semantics; and the organization must realize a balance between the most general logical rules of action and meaningful control and meaningful observability of the system.
- Synatic uncertainty is the inherent indeterminancy of a rational system in terms of completability and consistency; and the organization must realize a balance between completability and consistency.
- Algedonic uncertainty pertains to the lack of doubt and presence of confidence in the capacity for exchange in the syntax-pragmatics interface such that the organization may maintain a viability and robustness in its environment, but, nevertheless, respond with requisite speed to challenge.
- Ontogenetic uncertainty exists in the relationship between syntality and synergy in the system; and the organization must realize a balance in complexity of elements and relationships.

The realization of balance, equilibrium, or stabilization in the face of these uncertainties is the rasion dêtre for institutional leadership, and infuses organizational identity and character. The reduction of these organizational uncertainties is the sine qua non for the evaluation of the cooperative qua organization. Organizational evaluation delineates, procures, and provides information to reduce undertainty in decision-making about the organization.

Meta-structure

A meta-structure for the organization is evident in the uncertainties. A specification matrix for this meta-structure is a necessary delineation of the general information requirements for organizational evaluation. A sufficient delineation is realized when the pragmatic functions of the system are specified, including the ontogenetic complexity of syntal elements and synergistic relationships (Figure 2). Such lists of variables and taxa as prepared by March and Simon (1958), Griffiths et al. (1969), and Price (1968) may prove helpful in delineating the functions. The pragmatic functions may be the following:

- Policy-Making
- Needs-Assessment
- Planning
- Program Development
- Program Implementation
- Program Evaluation
- Management Information System
- Resources Management
- Environmental Relations

Self-organizing meta-structure. Self-organization enhances pattern in the face of entropic environmental abrasion. Syntality and/or synergy may simplify or become more complex. Let completability, consistency, controllability, and observability be represented in Figure 2 by points 11, 22, 33, and 44, respectively. Let the ij points represent interaction carriers between the equilibria agents. A given educational system, whether fully stabilized in institutional character, recently formed and seeking identity, or experiencing a transient condition of organizational development

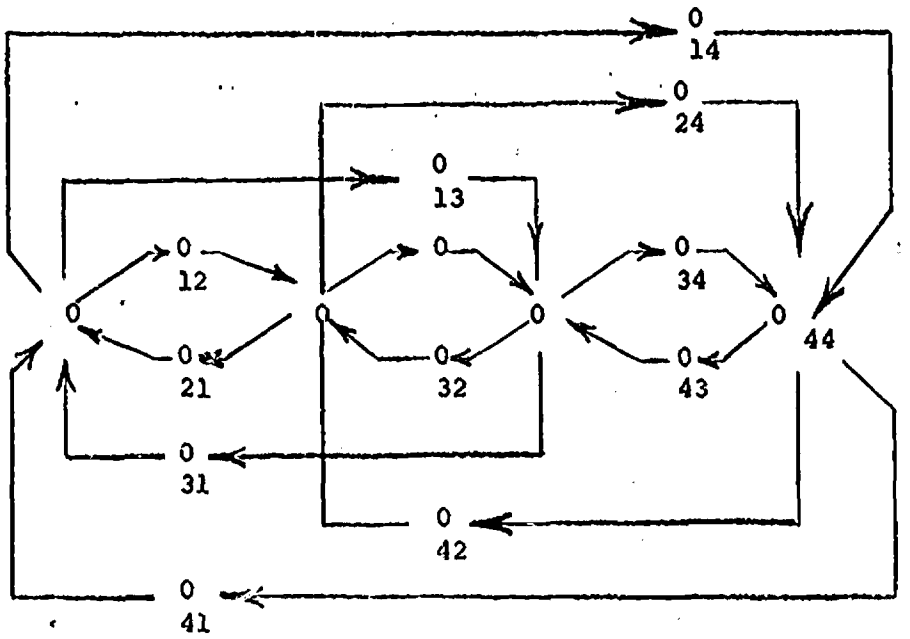

Figure 2

Self-Organizing Meta-Structure

may be conceptualized and evaluated for the full self-organization of epigenetic pragmatics (Figure 3).

System Logic

Simple advocacy is necessary but insufficient for the elaboration of learning support systems. Educational development may be defensibly constrained to modes of elaboration which are reliant upon algorithmic research-based advocacy (Schutz, 1973); which formulates a systems decidability in terms of a basis of requisite variety (Ashby, 1959). The delineation of requisite variety in the information universe for educational development spans the domains of logical duality and empirical duality. Logical duality includes incompletemess and consistency (Davis, 1958). Empirical duality includes controllability and observability. A typology of this duality may raise questions of program logic. Most developmental efforts, for pretenses of political sophistication or default in coping ability, are probably incomplete and inconsistent.

Incompleteness

Incompleteness exists if the universe of propositions is not exhausted. Exhaustion may be precluded by lack of specification of system states and/or the failure to identify relevant state-variables. A search of contigencies including needs, problems, and opportunities is essential in the resolution of the horizons of possibilities. Neglect here may lead to developmental efforts with tragic consequences. Suboptimization of a legitimate developmental subsystem with strong advocacy and band wagon allegiance may be tantamount to educational decay. Universal early childhood education with strong affective-socialization objectives could conceivably deplete society of "shy,lonely" sizothymic theoretical physicists.

Figure 3

Functional Complexity

Pragmatic Functions Ontogeny	Policy-Making	MIS	Needs Assessment	Planning	Program Development	Program Implementation	Program Evaluation	Resource Management	Environment Relations
<u>Syntality</u>									
Control-Variable									
Noise									
Output-Variable									
Parameters									
State-Variable									
Time									
<u>Synergy</u>									
Ambiguity									
Boundary									
Capacity									
Control Function									
Cost-Effectiveness									
Efficiency									
Effectiveness									
Equifinality									
Equivocation									
Fail-Safe									
Impulse-Response									
Multiplexing									
Performance Index									
Production Function									
Redundancy									
Reliability									
State-Transition									
State-Space									
Steady-State									
System-State									
Ultrastability									

Career education systems could have a dangerous incompleteness in the corporate productivity syndrome devaluing creative leisure and leading to a crisis in a state of braking industrial-technological growth (Nash, 1973).

Incompleteness encompasses the reflection of a logic upon itself to disclose an inadequate closure. A crack in the wall of the autonomous composure of a predicate calculus for action is persuasive of justifiable permeability or completion from without (Beer, 1959). The universe of criterion variables in the design calculus is subject to strategy shifting, elimination, combination, transfer, modification, and simplification. Operational indicators are characterized by the same reservations: tactical shifting (appropriate for formative evaluation). Acceptability levels for planning decisions concern channel capacity and boundary shifting. A fundamental planning decision based upon incompleteness information is in terms of a criterion of maturity. What conditions and circumstances emit the predication of a "mature Educational Laboratory" or "mature Educational Cooperative"?

The formulation of objectives constitutes a planning decisions subset relative to any development system. The delineation, gathering, and providing of information to fund planning decisions is context evaluation.

		Consistency	
		Absent	Present
Completeness	Present	Complete and Inconsistent	Complete and Consistent
	Absent	Incomplete and Inconsistent	Incomplete and Consistent

Figure 4

Basic Development Logic

This information pertains to intended ends of the product. The principal issue is incompletedness requiring strategic shifts in the goal-structure of the design. A functional closure may be certified to be embodied in the design as well as engender a repertoire of strategic shifts.

Monitor. Educational output is monitored by the educational development system (EDS). In the output space, Y, educational problems are identifiable. Which actions are to be taken to produce desired consequences? A casual relationship is predicated between a desired criterion effect, such as remediating an undesirable educational deficiency, and causal predictors or control decision variables. The control decision problem may be (1) stochastic risk, (2) deterministic certainty, or (3) judgmental uncertainty. For each decision control problem the monitor-identity function generates a criterion universe of concern for the EDS and enumerates the criterion elements. Implicit remediation actions are predicated for the search for a solution to the educational problem.

Consistency

Consistency in educational development encompasses state succession. A next-state mapping function describes the state transitions in the system as a form of law of interaction among states.

$$X(t) = \phi\ (t,to)\ \underline{X}o$$

$X \equiv n$ state vector

$Xo \equiv n$ initial state vector

$\phi(t,to) \equiv$ state-transition matrix

An aspect of succession is persistence, including sinks. Consistency provides pattern which enables choice in reconsidering incompleteness and structuring the system.

Choice involves criteria and decision rules. Criteria provide standards

as a basis for choosing among alternative actions. The criteria may be instrumental or consummatory; or, scientific or prudential. Strategies for action contingent upon levels of risk on criterion variables may facilitate choice in some decision frameworks.

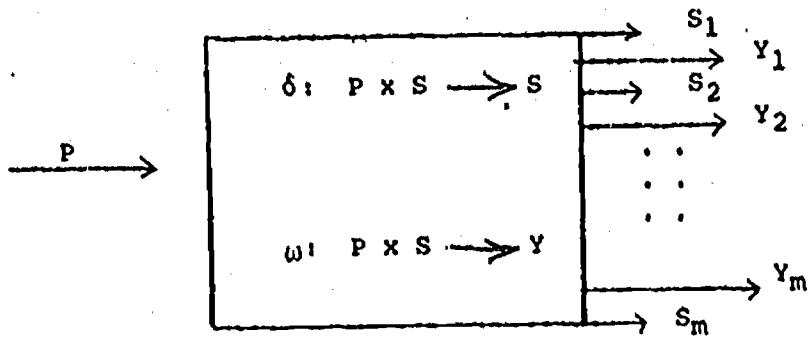

Figure 5

Educational Development:
State-Space Representation

Priority. Elements of the criterion universe of concern are ordered in a decision-making hierarchy. Given the finite family of criterion systems, Y, Y_i, and $i \in I$, $i > j$ iff Y_i has priority of action over Y_j, where $>$ denotes ordering in I, therefore,

$$Y_g > Y_h > \ldots > Y_1 < \ldots > Y_m$$

represents the complete ordering of m elements in the criterion universe.

Standards. For each criterion element a metric comparison may be chosen to demarcate the boundary between satisfaction and dissatisfaction, including lower bound, upper bound, and latitude.

A minimum standard does not mean the smallest number, but may be an upper bound, for example. A goal may be a more explicit numerical identity not in the boundary set.

Performance Index. The fundamental choices of system synthesis pertain to the systems performance index. The performance index is a function which

is minimized to achieve least initial error, instantaneous error, and cost-of-control in the operation of the system (Ogata, 1967). The criteria and decision rules for specifying the performance index of the system are crucial choices of character. The selection of state variables and the weighting criteria in the matrices of error and cost are very weakly expressed in most development systems, if not left emergent by default. Herein resides a central concern of feasibility analysis.

$$J = \underline{x}^* p \underline{x} + \int \underline{x}^* Q \underline{x}\, dt + \int \underline{u}^* R \underline{u}\, dt$$

J = system performance index

x = state-vector (column)

x* = state-vector (row)

P = initial error weighting matrix

Q = instantaneous error weighting matrix

u = control-vector

u* = control-vector

R = cost of control matrix

Discretion of the continuous equation would be appropriate for sampled data systems.

Structuring decisions. System structuring decisions influence state succession and persistence through redundancy, multiplexing, and reliability. Redundancy is multiple causal connectedness such that an influence may be exerted over alternative channels. Multiplexing is the refraction of single influences upon more than one criterion variable such that each criterion variable is an interactive combination of influences. Reliability is the certainty of effect from structuring action. These issues constitute the central concern of program planning.

Alternatives. A priority concern may be a composite causal effect of

decision variables: A set of decision variables could constitute a weighted linear combination to determine the criterion.

More explicitly, decision variables may be weighted in combinations to obtain decision alternatives for the solution of the problem involving a high priority educational criterion.

A vector-matrix equation may simplify:

$$\underline{Y}_1 = A\,\underline{x}$$

The multivariate planning matrix is conventionally formulated by the planner in terms of strategies and actions. Under stochastic risk the matrix elements are probabilities; under deterministic certainty the elements are numerical weighting coefficients; and under judgmental uncertainty the elements are relative valuations of the action states. The multivariate planning matrix is communicated to the decision-maker.

Decision. A decision problem is to choose a strategy of action from a set of alternative strategies.

A complete paradigm of the decision-making process involves certainty, risk, and uncertainty. Decision under certainty involves the selection of strategy with optimum payoff. Decision under risk involves the selection of strategy with the highest expected utility. Decision under uncertainty involves the selection of a decision rule and the selection of a strategy with payoff best meeting the decision rule.

- Two players may find a saddle point in a game such that each minimizes his losses and maximizes his gain. This is the game-theoretic minimax solution.
- Deterministic optimization involves an objective function and a feasible domain of allowable decisions. The objective function is a composite of an outcome function and an evaluation

function. The outcome function maps actions into criterion effects. The evaluation function maps the interaction of action and criterion into a value set. The deterministic optimization problem is to find decisive actions in the feasible domain such that the feasible objective function values become less than or equal to general objective function values.

- A stochastic efficiency matrix is important in decision under risk. A strategy may have a probability given in generating a certain outcome.

  Aoki (1967) has generated some conceptual structure on the optimization of stochastic systems compatible with mathematical control theory.

- The best of the worst, a pessimistic solution, is opted for under the premise of maximin utility. In the multivariate planning matrix, the minima of the rows are identified, and the smallest maximum of these is used to select the row strategy for action.

- The best of the best, or the optimistic solution, is opted for under maximax utility. That strategy, which simultaneously maximizes the value element is chosen.

- A weighted choice on the optimism-pessimism dimension is made in which that strategy, S_i, is selected which maximizes $(\alpha \max_j V_{ij} + (1-\alpha) \min_j V_{ij})$ in the Hurwicz rule. The symbol α has a numerical value given by

$$0 \leq \alpha \leq 1$$

such that $\alpha = 0 \Rightarrow$ the pessimistic maximin, and $\alpha = 1 \Rightarrow$ the optimistic maximax.

- That strategy, S_i, is chosen from the set of alternative strategies, S, such as to maximize $\sum_{j=1}^{n} V_{ij}$, or $\sum_{j=1}^{n} V_{ij}/n$ the mean values in the La Place rule.
- A satisfaction problem involves an objective function, a tolerance function, a feasible domain of allowable decisions, and arbitrary sets. Letting X and Ω be arbitrary sets:

$$g: X \times \Omega \rightarrow V \text{ (objective function)}$$

$$\gamma: \Omega \rightarrow V \text{ (tolerance function)}$$

The problem is to find a satisficing solution $\hat{X} \in X^f \subseteq X$, $w \in \Omega$

$$g(X, W) \leq \gamma(w)$$

The satisficing criterion is represented by $\leq$. The satisficing problem is represented as (g, r_1, X^f, Ω).

System Dynamics

The empirical duality of controllability and observability are crucial to the explication of system dynamics. Controllability exists if the system can be transferred from an initial state to a goal state by a finite control sequence in a finite time interval. Observability exists if a prior state may be inferred from a finite output sample in a finite time interval. The state-space of an educational development system may be decomposed into four cells according to the presence or absence of controllability and observability (Ogata, 1967; Shultz and Melsa, 1967).

		Controllability	
		Absent	Present
Observability	Present	Not Controllable, Observable	Controllable, Observable
	Absent	Not Controllable Not Observable	Controllable, Not Observable

Figure 6: System State-Space Decomposition

Any system may be partitioned into sumultaneous subsystems under controllability-observability schemata. Accountability may exist

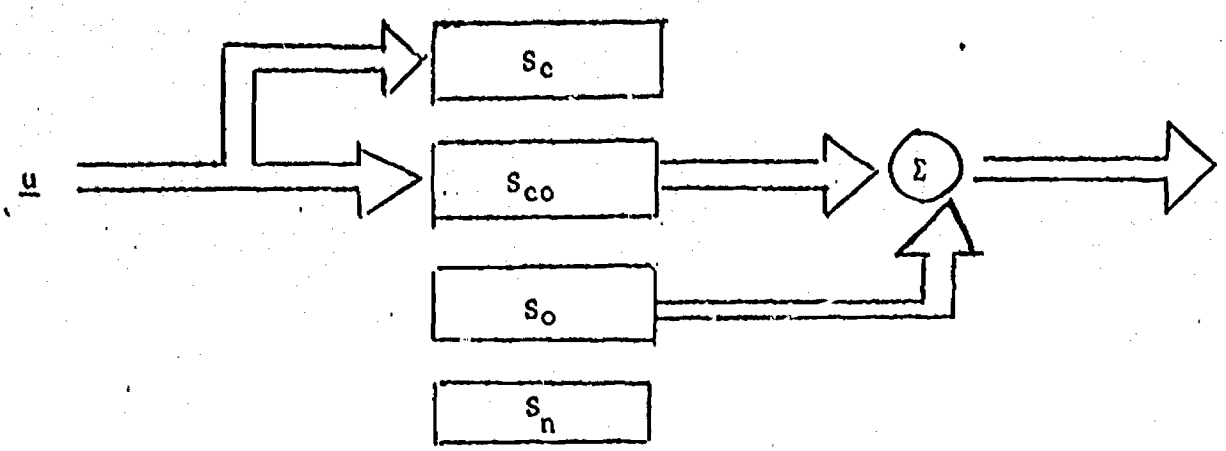

Figure 7

Controllability-Observability Partition

only under conditions of simultaneous controllability and observability. The S_c subsystem is an unresponsive cell to any control vector. The S_{co} sybsystem is a fully accountable partition. The S_o subsystem is an autonomous emitter of influence not strobed by the control signal. S_n is a non-reactive subsystem which may be necessary for the interactive capacity of the system.

Controllability

Controllability exists if the system can be transferred from any initial state to any final state in a finite time interval by a finite control sequence. Symbollically,

$$\dot{\underline{x}} = f, (\underline{x}, \underline{u}, t)$$

A linear vector-matrix variation has the following form:

$$\dot{\underline{x}} = A\,\underline{x} + B\,\underline{u}$$

$\underline{x}$ = state variable vector

$\underline{u}$ = control vector

A = transition matrix

B = control matrix

Goal-attainment includes yield; and the state-space representation gives an output vector as a function of state variables, control vector, and time.

$$\underline{y} = f_2\ (\underline{x},\ \underline{u},\ t)$$

A linear vector matrix variation has the following form:

$$\underline{y} = C\underline{x} + D\underline{u}$$

$\underline{y}$ = output vector

$\underline{x}$ = state vector

$\underline{u}$ = control vector

C = output matrix

D = transmission matrix

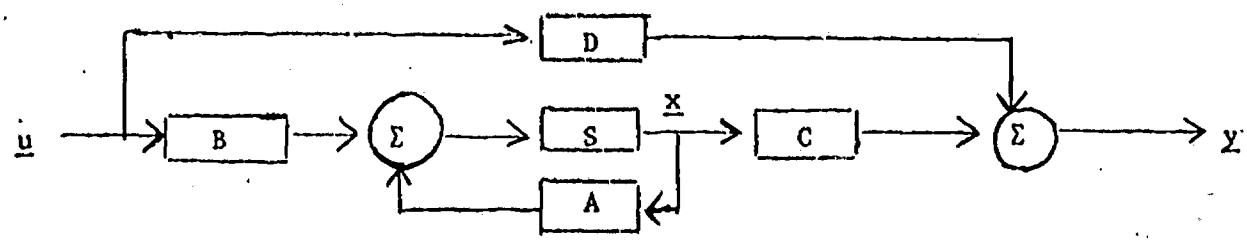

Figure 8

State-Space System

Strategic effects are to be noted:

- Certain state-variables could be associated with large coefficients such that a small change in the state-variable would engender a large effect upon a rate of change in that state variable or another one. The manipulation of such a variable in an educational development system may contribute to cost-effectiveness, for example.
- Alternative trajectories may be identifiable from the origin, or

an interim state to the final state. Under equifinality the optimal trajectory can be selected for economy of development.

- A stationary state exists, if $\dot{\underline{X}} = 0$, and development may be impossible and if tried a wasteful quandary; another selection of state-variables may not have a vanishing vector derivative and allow a developmental decidability for positive action.
- Periodic fluctuations, nodes, loops, and cycles may describe the development trajectory under certain circumstances and be difficult to interpret aside from a quantified systems model of decidability in educational development.
- A sigmoid curve of growth-like or decay-like phenomena may occur in some development systems, especially in diffusion subsystems.
- Independent subsystems may emerge, and even tend toward conditions of suboptimization.
- State-variables may have hierarchical order, akin to fundaments, first order factors, and second order factors.
- The impulse-response function may indicate the most cost-effective strategy for controlling system-states and effecting output yield.
- What is the system response to one unit change in each state-variable in strategic states?

The manipulation of state-transition sequences, or next-state mappings is consequent upon implementation decisions based upon information about implication, connectedness, and transformation. Such information is designated controllability information. The operational indicators, subject to formative search and manipulation, may be principal shapers, preventers, and encodable affecters. A manipulatable indicator may have an impulse-response function relative to its including criterion subsystem, and this impulse-

response controllability information may reduce the uncertainty attendant to effect. Acceptability levels on criterion variables involve the performance index relating terminal error, instantaneous error, and control cost: satisficing boundaries (or optimizing maxima); and ambiguity. Ambiguity is the uncertainty of the output given the input.

Means and actual effects are coupled in implementing decisions on the system. Concern is for program operations. The delineation, gathering, and providing information to fund implementation decisions pertaining to each of the manuals is process evaluation. The principal issue is controllability; that is, the problem is the manipulation of states to generate a transition sequence to create consequent target states. The design and engineering state invests the state-space system with substance, that is, elaborates a realization of syntality.

Once an acceptable coping strategy has been selected, the boundaries of action must be demarcated for each program. Implementation of the solution is rudimentary mapping of action elements, X_{1j}, and their uncertainties, U, onto Y_1, i.e. $P: X \times U \rightarrow Y$. The real mapping of the enabling variates onto the education criterion variate is in the utilization of products by adopting educational systems.

Observability

Observability information is delineated, gathered, and provided to make recycling decisions. The decipherable operationality of criterion variables is a matter of concern. A criterion construct must be subject to ascertainment. A criterion event must be witnessable. Antecedent states must be inferable from a finite output sample. Operational indicators must have decodable effects to subserve fault assignment in convergence policies. Acceptability levels for criteria of success would include attention to fail-safe and equivocation. Fail-safe

ensures safety due to warning system failure. Equivocation is uncertainty of input given the output.

Recycling decisions on the products of a development system constitute a congruence judgment between actual realization and ends, that is between consequent and consummatory states. The delineation, gathering, and providing of information pertaining to recycling decisions is product evaluation. The principal issue is observability; that is, the problem is the identification of antecedent states from an observation of outputs over a finite time interval. Field testing in the educational development paradigm has this central concern of product development strategy; operational testing shares the emphasis on controllability, but primarily for the benefit of potential adopters. Moreover, operational testing confronts the adopter with the issue of whether the educational development product does, indeed, provide an adequate situational decidability.

Observability may subsume the behavior such as March and Simon (1959) identified in an adaptive purposive system and related by Stepp (1972) to formative evaluation in educational development.

- Greater search is a consequence of less satisfaction.
- Higher expected value of reward is a consequence of greater search.
- Greater satisfaction is a consequence of higher expected value of reward.
- Less satisfaction is a consequence of higher level of aspiration.
- Higher level of aspiration is a consequence of higher expected value of reward.
- A stable equilibrium with aspiration exceeding expectation is implied by constant aspiration.

- A search proportional to expectation is implied by a constant expectation.
- A search threshhold residual is a consequence of the equality of aspiration and expectation.
- Cessation of search is a consequence of the equality of satisfaction with a certain multiple of the residual search.

Requisite Variety

Theoretical inadequacy is the selection of an inappropriate strategy. A strategy is a repertoire of variety and manipulations to influence payoff in a contest for stakes with an opponent (Ashby, 1956), in the sense of cybernetics. A strategy may include extraneous variety or exclude relevant variety and be characterized by theoretical inadequacy. The case of extraneous variety is a lack of parsimony, a redundancy not preventive of strategic validity. Strategic validity is the extent to which the transmitted influence of variety is the intended influence. The exclusion of relevant variety from a strategy may prevent strategic validity from being attained.

Theoretical inadequacy is crucial and justifies an intensive search to preclude a premature closure on criterion variety, elements of satisfaction with realization in reference to the design model. Ashby's principle of requisite variety states that variety can be driven down only by variety in the control or regulator (Ashby, 1956). Haberstroh (1965) has given this principle a high recommendation for organizational design. The control of realization requires a repertory of variety large enough to squelch noises and disturbances.

An autogenetic, self-organizing developmental system may be subjectable to undecidability through improper attention to requisite variety. For educational development systems, this could be tantamount to forfeiture of the completion-from-without which is so crucial to the metalogic of the

morphogenesis of development systems. The variety must be permissive of mappings of characteristic computable functions translating micro policy and the states of education development into macro realization. The delineation of requisite variety for general systems decision in educational development is represented in Figure 9.

An evaluation plan prescribes the identification of decisions, the delineation of information, the procurement of information, the provision of information to decision-makers, and the allocation of resources to execute the plan. Of course, requirements for formulation of the plan, and monitoring the utilization of evaluative information in decision-making should be met. A flow chart would facilitate the implementation of the plan according to a schedule of events and activities.

Identify Decisions

The general decision field is the self-organizing meta-structure of epigenetic pragmatics. The syntality and synergy of the pragmatic functions are to be determined; the system stabilization of syntax and semantics is to be determined for a base case; and alternative models for organizational development generated.

Delineate Information

Delineate the specific syntal elements and synergistics relationships of the pragmatic functions for the given cooperative. Require information on semantic stabilization, syntactic stabilization, and self-organizing stabilization of the ontogenetic pragmatics of the given cooperative for the base case and laternative models for organizational development. Require a demonstration for the given cooperative that self-organizing stabilization is sufficient for epigenetic stabilization and transactional stabilization, if possible. Otherwise, explicate uncertainties of epigenetic stabilization

Figure 9

Meta-Structure Matrix of Requisite Variety

Organizers / Ontogeny	SYNTAX		SEMANTICS		PRAGMATICS				
	Completability	Consistency	Controllability	Observability	F1	F2	.	.	F3
Syntality (Elements)									
Control-Variable									
Noise or Error									
Output-Variable									
Parameters									
State-Variable									
Time									
System States									
Synergy (Relationships)									
Ambiguity									
Capacity									
Control Synergy									
Cost-Effectiveness									
Efficiency									
Effectiveness									
Equifinality									
Equilibrium									
Equivocation									
Fail-Sale									
Fault									
Impulse-Response									
Multiplexing									
Performance Index									
Production Synergy									
Progressive Mechanization									
Progressive Segregation									
Redundancy									
Reliability									
Self-Regulation									
Stability									
State-Transition									
Steady-State									
Ultrastability									

and transactional stabilization.

The provision of information should be a reciprocal exchange between the evaluator and the decision-maker. The evaluator should monitor the utilization of evaluative information to assess its impact and worth.

Procure Information

Data procurement involves instrumentation and data processing; information procurement involves the transformation of data into decision-relevant messages.

Instrumentation. Identify or design instruments to obtain data on each syntal element of each pragmatic function over a specified time.

Obtain and administer instruments to gather data on each syntal element of each pragmatic function over a specified time.

Data Processing. Code and store data for retrieval. Provide for editing and quality control of data. Assure that suitable hardware and software computer facilities are accessible for the transformation of the data to decision-making information.

Methodology. Analytical and synthetic techniques for the generation of decision-referenced information are to be identified and scheduled. Different techniques are more applicable to certain meta-structural data than others. Suggested methodological choices are indicated in Figure 10.

Provision of Information

Information should be reported to decision-makers in a style consonant with their needs. One report should very simply indicate the contribution of each variable to the pragmatic function; the roles of the pragmatic function in institutional character, sense of identity, and organizational autonomy; and what can be done to improve the educational cooperative qua

Figure 10

Methodological Satisficing

Pragmatic / Epigentic Complexity	Symbolic Logic	Automata Theory	Graph Theory	Control Theory	Information Theory	Statistics
Epigenesis						
Self-Organization						
Syntax						
Semantics						
Transaction						
Pragmatics						
Algedonics						

organization. At least one technical report should be prepared to treat the theoretical and methodological problems in any given evaluation.

Summary

An information domain, adequate for systems decidability, may be subsetted with completeness, consistency, controllability, and observability. One differentiation of requisite variety for general systems decisions includes: system-states, state-variables, state-succession, system performance index, control signal, output, cont, error, and time. A specification of such a set of requisite variety constitutes a logico-empirical basis for algorithmic advocacy of educational development and a justification for an allocation of accountability. An interaction of the information domain with each state of development, state-set, and whole would enhance decidability.

The evaluation of an educational system qua organization requires the delineation, procurement, and provision of information for the reduction of uncertainty in decision-making. The theoretical basis for the evaluation model derives from a self-organizing meta-structure of ontogenetic pragmatics. The self-organizing meta-structure includes a supra-ordinate stabilization of syntax and semantics. Two subordinate stabilizations of completability-consistency and controllability-observability are embedded in the self-organizing stabilization. The ontogenetic pragmatics include a stabilization of syntal elements and synergistic relationships in the pragmatic functions of the organization. The pragmatic functions may include policy-making, needs assessment, planning, program development, program implementation, program evaluation, management information system resource management, and environmental relations. The purpose of the evaluation is to facilitate the improvement of general systems decisions in educational development.

BIBLIOGRAPHY

BIBLIOGRAPHY

Alper, Paul. "Introduction of Control Concepts in Educational Planning Models," Mathematical Models in Educational Planning. Paris: Organization for Economic Cooperation and Development, 1967.

Andrew, Gary M. and Donald E. Moir. Information - Decision Systems in Education. Itasca, Illinois: Peacock Publishers, 1970.

Anthony, Robert N. Planning and Control Systems: A Framework for Analysis. Boston: Harvard Business School, 1965.

Aoki, M. Optimizations of Stochastic Systems. New York: Academic Press, 1967.

Apter, Michael. Cybernetics and Development. New York: Pergamon Press, 1968.

Archibald, R. and R. Villoria. Network Based Management Systems. New York: John Wiley and Sons, 1967.

Armitage, Peter M., Cyril S. Smith, and Paul Alper. Decision Models for Educational Planning. London: Penguin, 1969.

_____. Models for Educational Decision Making. London: Penguin Book Company, 1969.

Ashby, W. R. An Introduction to Cybernetics. New York: John Wiley and Sons, 1959.

Beer, Stafford. Cybernetics and Management. New York: John Wiley and Sons, 1966.

_____. Decision and Control. London: John Wiley and Sons, 1966.

Bellman, Richard. Adaptive Control Processes. Princeton, New Jersey: Princeton University Press, 1961.

Berrien, Kenneth F. General and Social Systems. New Brunswick: Rutgers University Press, 1968.

Bertalanfly, Ludwig von. General System Theory. New York: George Braziller, Inc., 1968.

_____. "General System Theory - A Critical Review," Walter Buckley (ed.), Modern Systems Research for the Behavioral Scientists. Chicago: Aldine Publishing Company, 1968.

Bertram, Charles L. "The Application of a Model for the Evaluation of Educational Products." A paper presented at the annual meeting of the American Educational Research Association, New Orleans, Louisiana, February, 1973.

Booth, Taylor L. Sequential Machines and Automata Theory. New York: John Wiley and Sons, Inc., 1967.

Braybrooke, D. and C. E. Lindblom. A Strategy of Decision. New York; Free Press, 1963.

Bross, Irwin D. F. Design for Decision. New York: Free Press, 1953.

Broudy, Harry. Criteria for the Theoretical Adequacy of Conceptual Framework of Planned Educational Change. Bethesda, Maryland: ERIC, 1965. (ED 010 914)

Browder, Jr., Lesley H. Emerging Patterns of Administrative Accountability. Berkeley, California: McCutchan Publishing Corporation, 1971.

Buckley, Walter (ed.). Modern Systems Research for the Behavioral Scientist. Chicago: Aldine Publishing Company, 1968.

_____. Sociology and Modern Systems Theory. Englewood Cliffs, New Jersey: Prentice-Hall, Inc., 1967.

Campbell, Donald T. Exploration of Novel Research Designs and Measurement Techniques. Evanston, Illinois: Northwestern University, 1965. (ED 033 389)

Campbell, Merrill G. et al. Directions for Educational Development in Appalachia. Charleston, West Virginia: Appalachia Educational Laboratory, Inc., 1971.

Center for Effecting Educational Change. Evaluation and "PACE": A Study of Procedures and Effectiveness of Evaluation Sections in Approved PACE Projects with Recommendations for Improvement. Report #1 of the second National Study of PACE. Fairfax, Virginia: Center for Effecting Educational Change, 1968.

Clark, David L. and Egon G. Guba. "A Re-examination of a Test of the 'Research and Development Model' of Change," Educational Administration Quarterly. 8(3):93-103, Autumn, 1972.

Clark, David L. and Egon G. Guba. "An Examination of Potential Change Roles in Education," Rational Planning in Curriculum and Instruction, Washington: National Education Association, 1967, pp. 111-133.

Cook, Desmond L. Management Control Theory as a Context for Educational Evaluation. Columbus, Ohio: The Ohio State University Educational Program Management Center, 1970.

_____. "Management Control Theory as a Context for Educational Evaluation," Journal of Research and Development in Education, 3(4):13-26, Summer, 1970.

Croft, Don B. and Adolph J. Koenig (editors). Application of Research Management Techniques. Las Cruces, New Mexico: Special Interest Group on Research Management, New Mexico State University, 1971.

Curtis, Dr. William H. Educational Resources Management System. Chicago: Research Corporation, 1971.

Cyert, Richard M. and James G. March. A Behavioral Theory of the Firm. Englewood Cliffs, New Jersey: Prentice-Hall, Inc., 1963.

Darlington, Richard B. and Jean F. Rom. "Assessing the Importance of Independent Variables in Nonlinear Causal Laws," American Educational Research Journal, 9(3):449-462, Summer 1972.

Davis, Martin. Computability and Unsolvability. New York: McGraw-Hill Book Company, 1958.

Elgerd, Olle J. Control Systems Theory. New York: McGraw-Hill Book Company, 1967.

Etzioni, Amitai. Modern Organizations. Englewood Cliffs, New Jersey: Prentice-Hall, Inc., 1964.

Evans, J. A. A Framework for the Evolutionary Development of an Executive Information System, Part 1, Organizational Problem-Finding. Bedford, Massachusetts: Mitre Corporation, 1970. (ED 047 729)

_____. A Framework for the Evolutionary Development of an Executive Information System, Part 2: System Design, Implementation, and Evolution. Bedford, Massachusetts: Mitre Corporation, 1970. (ED 047 730)

Finn, James D. "Institutionalization of Evaluation," Evaluation and "PACE". Fairfax, Virginia: Center for Effecting Educational Change, 1968.

Flament, C. Applications of Graph Theory to Group Structure. Englewood Cliffs, New Jersey: Prentice-Hall, Inc., 1963.

Forrester, Jay. World Dynamics. Cambridge, Massachusetts: Wright-Allen Press, Inc., 1971.

Gephart, William J. Criteria for Methodological Adequacy for Research on Educational Change. Bethesda, Maryland: ERIC, 1965. (ED 011 146)

Gephart, William J. The Eight General Research Methodologies: A Facet Analysis of the Research Process. Bloomington, Indiana: Phi Delta Kapa, 1969. (ED 052 237)

Gideonse, Hendrik D. Educational Research and Development in the United States. Washington, D. C.: National Center for Educational Research and Development, U. S. Government Printing Office, 1970.

Gordon, Robert. "Optimum Component Redundancy for Maximum System Reliability," Operations Research, 5:229-243, 1957.

Griffiths, Daniel (ed.). Developing Taxonomies of Organizational Behavior in Education - Final Report. New York: New York University, April, 1968. (ED 021 339)

Griffiths, Daniel (ed.). Developing Taxonomies of Organizational Behavior in Educational Administration. Chicago: Rand McNally and Company, 1969.

Guba, Egon G. Methodological Strategies for Educational Change. Bethesda, Maryland: ERIC, 1965. (ED 011 404)

Habenstein, Robert W. (ed.). Pathways to Data: Field Methods for Studying Ongoing Social Organizations. Chicago: Aldine Publishing Company, 1970.

Haberstroh, Chadwick J. "Organizational Design and Systems Analysis," James G. March (ed.), Handbook of Organizations. Chicago: Rand McNally and Company, 1965.

Haggart, Sue A. (ed.). Program Budgeting for School District Planning. Englewood Cliffs, New Jersey: Educational Technology Publications, 1972.

Halpin, Andrew W. Administrative Theory in Education. New York: The MacMillan Company, 1958.

_____. Theory and Research in Administration. New York: The MacMillan Company, 1966.

Harary, Frank. "Graph Theory and Group Structure," R. Duncan Luce, Robert R. Bush, and Eugene Galanter (editors), Readings in Mathematical Psychology, Vol. II. New York: John Wiley and Sons, Inc., 1965.

Harary, Frank, Robert Z. Norman, and Dorwin Cartwright. Structural Models. New York: John Wiley and Sons, Inc., 1965.

Hills, R. Jean. Toward A Science of Organizatio.. Eugene, Oregon: University of Oregon Press, 1968.

Jones, J. Christopher. Design Methods: Seeds of Human Futures. London: Wiley-Interscience, 1970.

Kaplan, Abraham. The Conduct of Inquiry. San Francisco: Chandler Publishing Company, 1964.

Keeney, M. G., H. E. Koenig, and R. Semach. State-Space Models of Educational Institutions. East Lansing, Michigan: Division of Engineering Research, Michigan State University, 1967.

Kleene, Stephen Cole. Mathematical Logic. New York: John Wiley and Sons, Inc., 1967.

Klein, S. P., J. Burry, D. A. Churman, and M. A. Nadeau. Evaluation Workshop I: An Orientation. Monterey, California: GTB/McGraw-Hill, 1971.

Lessinger, Leon M. and Ralph W. Tyler (editors). Accountability in Education. Belmont, California: Wadsworth Publishing Company, Inc., 1971.

Litterer, Joseph A. Organizations: Structure and Behavior, Vol. I. New York: John Wiley and Sons, Inc., 1969.

_____. Organizations: Systems, Control and Adaptation, Vol. II. New York: John Wiley and Sons, Inc., 1969.

Levien, Roger E. National Institute of Education: Preliminary Plan for the Proposed Institute. Santa Monica, California: RAND Corporation, 1971. (ED 047 167)

March, James G. (Ed.). Handbook of Organizations. Chicago: Rand McNally and Company, 1965.

_____ and Herbert A. Simon. Organizations. New York: John Wiley and Sons, Inc., 1958.

Meadows, Donella H. et al. The Limits to Growth: A Report for the Club of Rome's Project on the Predicament of Mankind. New York: Universe Books, 1972.

Messarovic, M. D., D. Macko, and Y. Takahara. Theory of Hierarchical, Multi-level Systems. New York: Academic Press, 1970.

Mishkin, Eli and Ludwig Braun. Adaptive Control System. New York: McGraw-Hill Book Company, Inc., 1961.

Nash, Robert J. and Russell M. Agne. "Career Education: Earning A Living," Phi Delta Kappan, 54(6):373-378, February, 1973.

Ogata, Katsuhiko. State Space Analysis of Control Systems. Englewood Cliffs, New Jersey: Prentice-Hall, Inc., 1967.

Organization for Economic Cooperation and Development. Mathematical Models in Educational Planning. Paris: Organization for Economic Cooperation and Development, 1967.

_____. Methods and Statistical Needs for Educational Planning. Paris: Organization for Economic Cooperation and Development, 1967.

Pontryagin, L. S. et al. The Mathematical Theory of Optimal Processes. New York: John Wiley and Sons, Inc., 1962.

Price, James L. Organizational Effectiveness: An Inventory of Propositions. Homewood, Illinois: Richard D. Irwin, Inc., 1968.

Provus, Malcolm. Discrepancy Evaluation: For Educational Program Improvement and Assessment. Berkeley, California: McCutchan Publishing Corporation, 1971.

_____ and G. Edward Lundin. "Evaluation for Administrative Action," Journal of Research and Development in Education, 3(4):1-108, Summer 1970.

Roberson, E. Wayne (ed.). Educational Accountability Through Evaluation. Englewood Cliffs, New Jersey: Educational Technology Publications, 1971.

Roe, A. An Adaptive Decision Structure for Educational Systems. Berkeley, California: University of California, 1963.

Rudwick, Bernard H. Systems Analysis for Effective Planning: Principles and Cases. New York: John Wiley and Sons, Inc., 1966.

Sanders, James R. and Blaine R. Worthen. "A Descriptive Summary of Framework for Planning Evaluation Studies," SRIS Quarterly, 5(1):10-14, Spring 1972.

Schultz, Donald G. and James L. Melsa. State Functions and Linear Control Systems. New York: McGraw-Hill Book Company, 1967.

Schutz, Richard E. "Advocacy and R&D in Education," Educational Researcher, 2(1):3, January, 1973.

Scriven, Michael et al. An Evaluation System for Regional Labs and R&D Centers. Washington, D.C.: USOE (NCERD), 1971.

Shannon, C. E. "A Mathematical Theory of Communication," Bell System Technical Journal, 27:379-423, 623-656, 1948.

_____ and W. Weaver. The Mathematical Theory of Communication. Urbana, Illinois: University of Illinois Press, 1949.

Sprigle, Herbert. "Who Wants to Live on Sesame Street?" Young Children, December, 1972.

Stake, Robert E. "PACE Evaluation," Evaluation and "PACE". Fairfax, Virginia: Center for Effecting Educational Change, 1968.

Starr, Martin Kenneth. Product Design and Decision Theory. Englewood Cliffs, New Jersey: Prentice-Hall, Inc., 1963.

Stepp, Ermel, Jr. An Evaluation Model for a Regional Educational Service Agency: Construction in a Product Development Setting. A paper presented in a symposium on a product evaluation model at the annual meeting of the American Educational Research Association, New Orleans, Louisiana, February, 1973.

_____. Planning Educational Systems Control: A State-Space Model of Strategic Factors. Ann Arbor: University Microfilms, 1971.

Stufflebeam, Daniel et al. Design for Evaluating R&D Institutions and Programs. Washington, D. C.: USOE (NCERD), 1971.

_____. Educational Evaluation and Decision Making. Itasca, Illinois: F. E. Peacock Publishers, Inc., 1971.

Taylor, Donald W. "Decision Making and Problem Solving," Handbook of Organizations, James G. March (editor). Chicago: Rand McNally and Company, 1965.

Temkin, Sanford. A Comprehensive Theory of Cost-Effectiveness. Philadelphia: Research for Better Schools, Inc., 1970. (ED 040 503)

Tracz, George S. "An Overview of Optimal Control Theory Applied to Educational Planning." Paper read at the American Educational Research Association, Los Angeles, California, 1969. (ED 030 189)

Tyler, Ralph W. (ed.). Educational Evaluation: New Roles, New Means. The Sixty-eighth Yearbook of the National Society for the Study of Education. Chicago: The National Society for the Study of Education, June, 1970.

USOE. Testing and Further Development of an Operational Model for the Evaluation of Alternative Title I (ESEA) Projects. Washington, D. C.: Office of Education (DHEW), 1968. (ED 032 757).

Von Neumann, John. "The General and Logical Theory of Automata," Cerebral Mechanisms in Behavior. New York: John Wiley and Sons, Inc., 1951.

_____. "Probabilistic Logics and the Synthesis of Reliable Organisms from Unreliable Components," Automata Studies. Princeton, New Jersey: Princeton University Press, 1956.

Webb, Eugene et al. Unobtrusive Measures: Non-reactive Research in the Social Sciences. Chicago: Rand McNally and Company, 1966.

Weiner, Norbert. Cybernetics: Communication and Control in the Animal and the Machine. New York: John Wiley and Sons, Inc., 1948.

_____. The Human Use of Human Beings: Cybernetics and Society. New York: Doubleday and Company, Inc., 1954.

Wheeler, Harvey and Alexander King. "The Totality of the World Problematique Must Now Be Addressed," Center Report, 5(4):26-29, October, 1972.

Worthen, B. R. and J. R. Sanders. Educational Evaluation: Theory and Practice. Worthington, Ohio: Charles A. Jones (in press).

Young, Stanley. Management: A Systems Analysis. Glenview, Illinois: Scott, Foresman and Company, 1966.

Zemach, Rita. A State Space Model for Resource Allocation in Higher Education. East Lansing: Division of Engineering Research, Michigan State University, 1967.