DOCUMENT RESUME

ED 082 953 SE 015 965

TITLE Articulated Multimedia Physics, Lesson 2, Significant Figures and Powers of Ten.
INSTITUTION New York Inst. of Tech., Old Westbury.
PUB DATE [65]
NOTE 134p.

EDRS PRICE MF-$0.65 HC-$6.58
DESCRIPTORS *College Science; Computer Assisted Instruction; *Instructional Materials; *Multimedia Instruction; *Physics; Science Education; *Study Guides; Supplementary Textbooks; Symbols (Mathematics)

ABSTRACT

As the second lesson of the Articulated Multimedia Physics Course, instructional materials are presented in this study guide with relation to significant figures and powers of ten. An introductory description is given for precise measurement and numbers in scientific notation. The subject content is provided in scrambled form, and the use of matrix transparencies is required for students to control their learning process. In addition, students are asked to use magnetic tape playback, instructional tapes, and single concept films at the appropriate place in conjunction with a worksheet. Included are a problem assignment sheet, a study guide slipsheet, and illustrations for explanation purposes. Related documents are SE 015 963 through SE 015 977. (CC)

ARTICULATED MULTIMEDIA PHYSICS

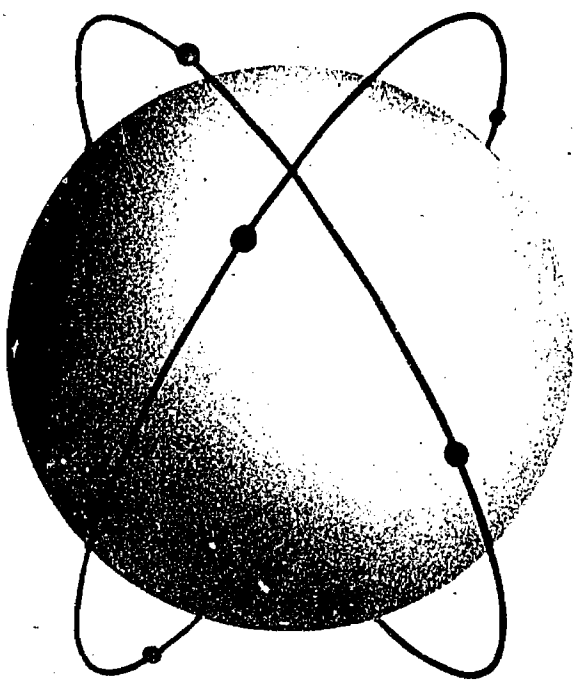

LESSON 2

NEW YORK INSTITUTE OF TECHNOLOGY
OLD WESTBURY, NEW YORK

NEW YORK INSTITUTE OF TECHNOLOGY

Old Westbury, Long Island

New York, N.Y.

ARTICULATED MULTIMEDIA PHYSICS

Lesson Number 2

SIGNIFICANT FIGURES AND POWERS OF TEN

IMPORTANT: Your attention is again called to the fact that this is not an ordinary book. It's pages are scrambled in such a way that it cannot be read or studied by turning the pages in the ordinary sequence. To serve properly as the guiding element in the Articulated Multimedia Physics Course, this Study Guide must be used in conjunction with a Program Control equipped with the appropriate matrix transparency for this Lesson. In addition, every Lesson requires the availability of a magnetic tape playback and the appropriate cartridge of instructional tape to be used, as signaled by the Study Guide, in conjunction with the Worksheets that appear in the blue appendix section at the end of the book. Many of the lesson Study Guides also call for viewing a single concept film at an indicated place in the work. These films are individually viewed by the student using a special projector and screen; arrangements are made and instructions are given for synchronizing the tape playback and the film in each case.

New York Institute of Technology
Articulated Multimedia Physics

LESSON 2

STUDY GUIDE SLIP SHEET

Please correct STUDY GUIDE as indicated below before starting on this lesson.

STUDY GUIDE TEXT: Page 62, second line from top. Change the number 21.8 at the beginning of the line to 21.9.

Page 66, last line inside the NOTEBOOK ENTRY box. Change 10,000 to 100,000.

STUDY GUIDE DIAGRAMS: Page 3, Figure 1. Draw a large "X" through the diagram and write beneath it "see slip sheet". When you reach page 3, refer to the corrected Figure 1 drawn below.

WORKSHEETS: No changes.

HOMEWORK PROBLEMS: No changes.

When the changes indicated above have been entered, you may begin Lesson 2.

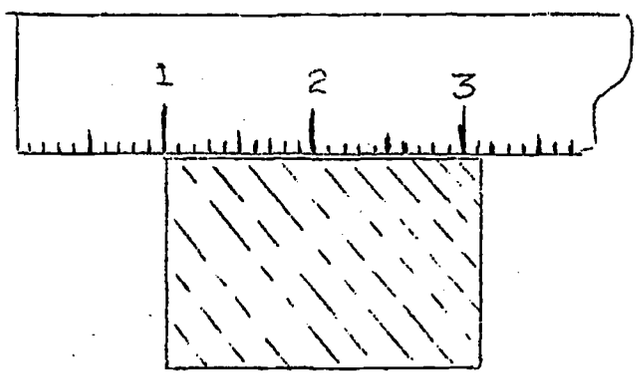

Figure 1 (Drawn to double scale)

NOTEBOOK ENTRY: At the end of the entries for this lesson, add the following:

1 Angstrom Unit = 10^{-10} meter or

1 meter contains 10^{10} Angstrom Units.

You may have measured the length and width of a room to find the largest size rug that would fit it. With a tape measure or yardstick you might have figured a 15 ft. length and a 10 ft. width, considering these measurements sufficient. It would be useless to measure to a degree of precision that would result in such precise dimensions as 15.13766 ft. long and 10.88307 ft. wide. There are many occasions when a one- or two-figure answer for a measured distance, time, or mass suffices. Certain dimensions in science and technology, however, demand such careful measurement that results must be expressed by numbers containing as many as seven or eight figures. For example, a bearing for a delicate instrument may need a diameter measurement to the nearest ten-thousandth of a centimeter. It might happen that its final measurement yields an answer of, say, 12.1336 cm.

The concept of significant figures is common in science and engineering to give measurement proper perspective in terms of dimension measured and the precision of data taken. The experienced eye can tell whether a length was measured with a centimeter rule, a vernier caliper, a micrometer caliper, or a micrometer microscope. In that order, these instruments measure lengths with increasing precision. In your work with significant figures you can express measurements with great precision. Also, an understanding of significant figures aids in reading scientific articles or papers.

Please go on to page 2.

Included in this lesson is a thorough review of powers-of-ten notation and its special adaptation, scientific notation. Significant figures and scientific notation go together like bread and butter. When you gain facility with both techniques, your scientific work will be made easier.

We have limited our discussion of scientific notation to methods of writing measurements in this form with significant figures. Later, you will learn how to manipulate numbers expressed as powers of ten.

If you wonder when we will start studying physics rather than mathematical side issues, remember that you would not build the framework of a house before its foundation was completed. Let's make this foundation a good strong one.

Please turn to page 125 in the blue appendix.

As an introduction to specifying precision through significant figures, study figure 1. A small block of wood with straight edges is to be measured by a centimeter scale or rule. Using the "1" marker as the starting point, we can say that the length of the block is "slightly greater than 2 cm." But we can do better than this. The scale is calibrated (subdivided) into smaller divisions. Each of the smaller markers represents one millimeter (mm) or 0.1 cm. Therefore, we can say with certainty that the block is longer than 2.1 cm but shorter than 2.2 cm.

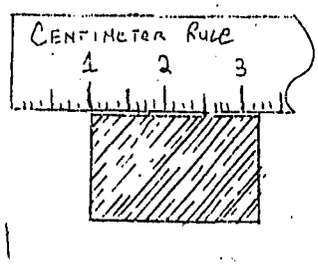

Figure 1.

Now imagine that each of the millimeter divisions is divided into 10 equal, smaller parts. These imaginary divisions are tiny indeed, but your eye is sharp enough still to visualize them. Try to estimate how many of these tiny imaginary divisions beyond the 3.1 marker are covered before we reach the end of the block. Of course, each of the imaginary divisions are 1/10 of a millimeter or 1/100 or a centimeter. Thus, if the block extends, in your opinion, to the second imaginary division beyond the 3.1 marker, its length is 2.12 cm; if it extends to the sixth division in your opinion, then the length is 2.16 cm; and so forth.

What do you estimate the length of the block to be?

(1)

A 2.12 cm

B 2.14 cm

C 2.16 cm

YOUR ANSWER --- A

You are correct. According to rule 4(c), you should carry out the division to 1 significant figure more than the least precise measurement, then round back to the same number of significant figures. The least precise measurement in 866.38 divided by 27 is, of course, the 27. This has 2 significant figures. Hence, the division should be carried out to 3 significant figures and then rounded back to 2. Thus:

$$\frac{866.38}{27} = 32.1 = \underline{32}$$

For review, perform the operations indicated in the following groups. All the groups but one have one or more significant figure errors. (You may assume that the arithmetic is correct in all of them.) Choose the group that is entirely correct.

Group 1	Group 2	Group 3
43.1 + 16.336 = 59.4	1.87 + 0.586 = 2.46	34.6 + 22.12 = 56.7
6.885 - 3.1 = 3.8	5.5 - 3.276 = 2.2	0.866 - 0.5 = 0.366
12.8 x 7 = 89.6	0.454 x 51 = 23	2.823 x 51 = 140
866 ÷ 12 = 72.2	635 ÷ 12 = 53	6.063 ÷ 0.1 = 0.63

(25)

A Group 1 is correct.

B Group 2 is correct.

C Group 3 is correct.

YOUR ANSWER --- B

Right. All rules have been properly applied. You're ready for the next step.

Thus far we have concentrated on numbers larger than 1. But how do we handle numbers smaller than 1 in scientific notation? Consider the number 0.1 or 1/10. This is actually the reciprocal of 10. In scientific notation we would write 0.1 as:

$$0.1 = 1/10 = 10^{-1}$$

The minus sign before the exponent denotes that the "10" has been moved from the denominator to the numerator. In other words, we have changed the reciprocal (1/10) into non-fractional form (10^{-1}).

Here are the scientific-notation forms of all the powers of ten from 0.1 (one-tenth) to 0.000001 (one-millionth).

$0.1 = 10^{-1}$	A quick study of these expressions will
$0.01 = 10^{-2}$	show immediately that you can find the
$0.001 = 10^{-3}$	value of the negative exponent merely by
$0.0001 = 10^{-4}$	counting the number of places you must
$0.00001 = 10^{-5}$	move the decimal to the right to place it
$0.000001 = 10^{-6}$	after the "1."

Which one of the following is the proper expression for one-billionth?

(33)

A 10^{-9}

B 10^{-8}

YOUR ANSWER --- B

There is an error in the 4th item of the group. It should read:

$$6464.6 = 6.4646 \times 10^3$$

The decimal point was moved 3 places to the left, not 4 places. This gives the power of ten a positive exponent of 3.

Please return to page 94 and select another answer.

YOUR ANSWER --- A

You are correct. Excellent work! It just happens in this case that adding 1 to 299 yields 300. In this number, the 2 zeros after the 3 have just as much significance as any other digits would have if they were arrived at by a similar process of rounding back. However, by this time you must be somewhat bewildered. In a string of final zeros, how do you know which are significant and which are not? Let's check. When numbers are strung out--like 300,000 km per sec--it is often impossible to tell how many zeros are significant unless you know the process whereby the number was obtained. But, when you learn how to write measurements in powers of ten notation, you will discover that this uncertainty vanishes completely! So let's wait a while for the answer to the "zero" question.

Before continuing, please turn to page 127 in the blue appendix.

Some time back we promised you a simple rule for determining the number of significant figures in any numerical expression. This rule applies to all cases except the one just discussed in which there is a string of final zeros. However, the rule does apply even to this type of number when it is written as a power of ten.

NOTEBOOK ENTRY

2. Reading from left to right, the first digit that is not a zero is the first significant figure. The next digit is the second significant figure even if it is zero. The next digit is the third significant figure even if it is zero, etc.

Please go on to page 8.

We'll practice this rule on the following examples:

Number	Sig. Fig.	Number	Sig. Fig.
72.61	4	5.800	4
7.261	4	5.8	2
0.7261	4	0.001	1
0.726	3	5.001	4
0.7260	4	36.060	5
36.0	3	36.000	5

Finally, 62,000 cannot be analyzed for significant figures in this form. It may have 2, 3, 4, or 5 significant figures, depending on the process by which it was obtained.

Now try your hand at using the rule. On scrap paper, compute all of the examples in the groups below. Check your answer against those given, then respond to the choices that follow the groups.

No.	Sig. Figs.	No.	Sig. Figs.	No.	Sig. Figs.
0.3604	4	62,001	5	78.500	5
62,541	5	1,000	1	1.0010	5
0.0805	3	0.0040	2	0.004	3

Which statement below is correct?

(15)

A Group 1 has one error.

B Group 2 has no errors.

C Groups 2 and 3 have one error each.

D Each group has one error.

YOUR ANSWER ---- A

This is incorrect becuase, when we see 10 raised to the 6th power, we visualize 10^6. The power tells you the number of times 10 must be written in the multiplication process. In this case, the power is 6, so we have:

$$10 \times 10 \times 10 \times 10 \times 10 \times 10 = 1{,}000{,}000$$

But we wanted to reach 100,000,000. Your answer is exactly 100 times too small.

Please return to page 39 and select another answer.

YOUR ANSWER --- A

We don't agree. To show you why our estimate differs from yours, we have redrawn part of the original figure in magnified form. Refer to Figure 2. If the edge of the block came all the way to the imaginary (dotted) marker which is exactly midway between 3.1 and 3.2, the length of the block would then be 2.15 cm. You will note that it falls short by, perhaps one imaginary division.

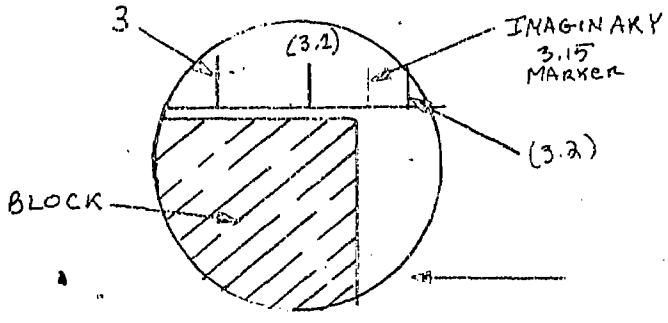

Figure 2.

Therefore, what was wrong with your estimate of the length of the block as 2.12 cm?

(2)

A My estimate was too short.

B My estimate was too long.

YOUR ANSWER --- C

No. You have the right idea about the position of the decimal point, but you didn't count correctly the places moved by the decimal point. Note:

$$6{,}450{,}000 = 6\ .\ 4\ 5\ 0\ 0\ 0\ 0 \times 10^{?}$$

$$6\ 5\ 4\ 3\ 2\ 1$$

How many places to the left did you move the decimal point to go from 6,450,000 to 6.45? What should be the exponent of 10?.

Please return to page 117 and select another answer.

YOUR ANSWER --- B

You are correct. As illustrated in the magnified view in Figure 2, the block does not quite extend to the dotted midway marker; thus it must be shorter than 2.15 cm. It falls short by, perhaps, 1 imaginary division; hence its length is very close to 2.14 cm.

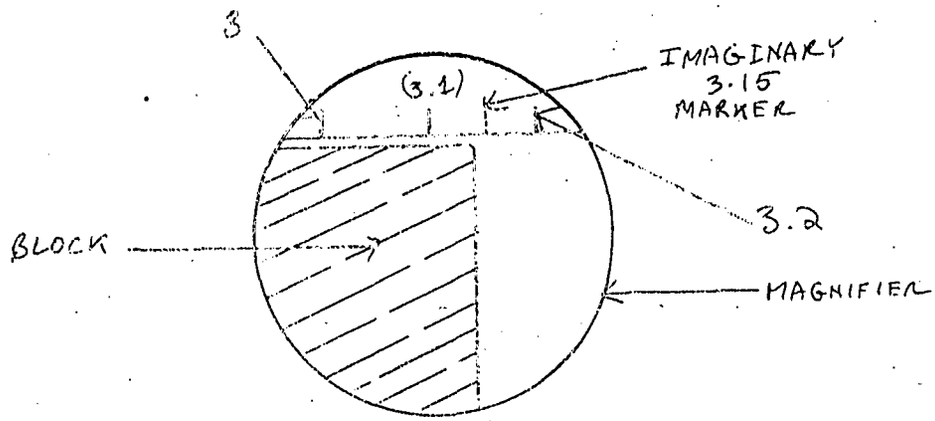

Figure 2.

You will agree that the last digit (the 4 of 2.14) is not all certain. Since it is an estimate by eye, it is quite possible that two observers would obtain different final digits; say, plus of minus 1. Regardless of the possible ±1 error in the last place, such an estimate should be made in every measurement you take. Certainly, the estimated length is more nearly correct than a similar measurement made without estimating at all.

Suppose you try another measurement requiring an estimate for the last digit. The plates used to print U. S. one-dollar bills are held to very close tolerances; on the green side of the bill, the word ONE right across the center is made up of letters whose heights can be depended upon. Using extreme care, and a magnifying glass if you have one, measure the height of the letter E in the word ONE on a dollar bill. By estimating the last fraction of the millimeter, you can come up with a measurement to the nearest 0.01 cm. Which of the following does your measurement approximate most closely?

(4)

A 1.91 cm

B 1.45 cm

C 1.40 cm

YOUR ANSWER --- A

You are correct. One-billionth is one-thousandth of one-millionth. It may be written this way:

one-billionth = 0.001 x 0.000001 = 0.000000001

Thus, the decimal had to be moved 9 places to the right to place it after the "1." Hence the exponent of 10 is -9, yielding 10^{-9}.

NOTEBOOK ENTRY -

(topic 5)

(c) When a number smaller than 1 is to be written in scientific notation, move the decimal point to the right to place it after the first non-zero digit. The number of places moved by the decimal point gives the correct negative exponent of 10.

Study the following examples:

$0.159 = 1.59 \times 10^{-1}$
$0.0652 = 6.52 \times 10^{-2}$
$0.003386 = 3.386 \times 10^{-3}$
$0.000942 = 9.42 \times 10^{-4}$

Now can you express 0.074483 in scientific notation? Which is right?

(34)

A $0.074483 = 7.4483 \times 10^{-3}$

B $0.074483 = 7.4483 \times 10^{-2}$

C $0.074483 = 7.4483 \times 10^{2}$

YOUR ANSWER --- C

We don't agree. To show you why our estimate differs from yours, we have redrawn part of the original figure in magnified form. Refer to Figure 2. If the edge of the block came all the way to the imaginary (dotted) marker, which is exactly midway between 3.1 and 3.2, the length of the block would then be 2.15 cm. You will note, however, that it falls short by, perhaps, one imaginary division.

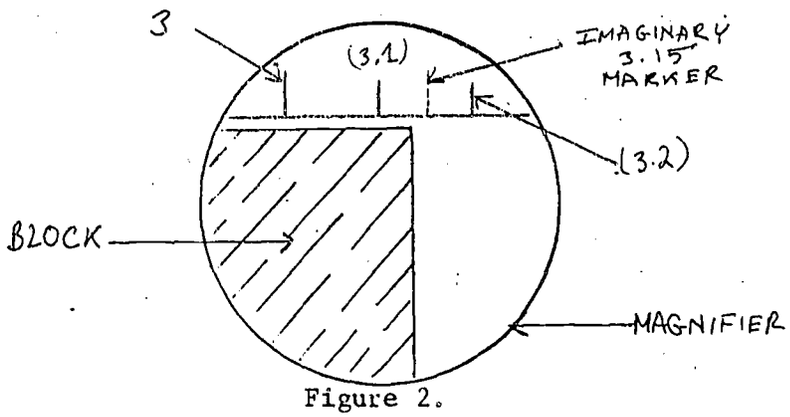

Figure 2.

Therefore, what was wrong with your estimate of the length of the block as 2.16 cm?

(3)

A My estimate was too long.

B My estimate was too short.

YOUR ANSWER --- C

You are correct. We are ready for the rules governing multiplication and division with attention to significant figures. In this case, we shall state the rules for notebook entry first, then apply them to samples.

NOTEBOOK ENTRY

4. Multiplication or division with attention to significant figures:

(a) A product or quotient should generally (there are exceptions but we shall ignore these) contain no more significant figures than the number of significant figures in the least precise measurement.

(b) In successive multiplications (such as length x width x thickness in finding volume) each intermediate product may be rounded off so that it has 1 significant figure more than the least precise measurement.

(c) In division, the operation should be carried out to 1 significant figure more than the number of significant figures in the least precise measurement. Then it should be rounded off to the same number of significant figures.

For illustration, let us find the volume of a block of wood that measures 10.36 cm long, 5.22 cm wide, and 2.61 cm thick. The least precise measurement (either 5.22 cm or 2.61 cm) has 3 significant figures, so we know that the final volume should have no more than this. Let us first find the area of a major face by multiplying length x width; thus: 10.36 cm x 5.22 cm = 54.0792 cm^2.

According to rule 4(b) what should this area be rounded off to?

(22)

A 54.1 cm^2

B 54.08 cm^2

C 54.079 cm^2

YOUR ANSWER --- C

Group 3 contains 2 errors in significant figures.

34.6 + 22.12 = 56.7	This one is right.
0.866 - 0.5 = 0.366	This one is wrong. The least precise measurement is the 0.5, a 1 significant figure number. The answer should have but 1 significant figure after the decimal. It should be 0.4.
2.823 x 51 = 140	This one is right.
0.063 ÷ 0.1 = 0.63	This one is wrong. The divisor 0.1 is a 1-significant figure number; hence the answer should have only 1 significant figure; it should be 0.6.

Please return to page 4 and select another answer.

YOUR ANSWER --- D

This is the first sample, not the fourth.

You must be guessing, because you should not get even one notebook check selection wrong.

Here is the correct list again.

	Number	Sig Figs
1.	0.1006	4
2.	143.00	5
3.	0.0601	3
4.	10.0	3
5.	4000.6	5
6.	672.115	6
7.	80004.	5
8.	0.00008	1

Please return to page 62 and select another answer.

YOUR ANSWER --- B

You are correct. Since the "57" portion of the decimal is greater than 50, we drop it and add 1 to the remainder. Thus:

$$\begin{array}{r} 2.6 \text{ m} \\ 12.56 \text{ m} \\ \underline{0.397 \text{ m}} \end{array}$$

15.557 m = 15.6 m to the correct number of significant figures. We rounded off because our result, according to the rules of the significant figures, should have no more than one uncertain digit. If we had left it as 15.557 m, the result would have had 3 uncertain digits (5, 5, and 7).

There is a faster and simpler way to do this. We can round off the original lengths before addition. This rounding off is carried back to the precision of the least precise measurement--in this case back to one decimal place since the least precise measurement (2.6 m) has one decimal place.

So, round off the above measurements and then add the resulting numbers. What do you get as the sum?

(18)

A 15.4 m

B 15.5 m

C 15.6 m

YOUR ANSWER --- A

You don't mean it! The volume product should not have more significant figures than the least precise of the original measurements. The least precise measurements were 5.22 cm and 2.61 cm. How many significant figures does each of these have? Now count the significant figures in 141.1488. The answer is way off, isn't it?

Please return to page 27 and select another answer.

YOUR ANSWER --- C

The idea was right, but the procedure was wrong. In rounding off 15.557, you simply dropped off the "57" and were left with 15.5. You can't do it that way because 57 is greater than 50.

Please return to page 105 and select another answer.

YOUR ANSWER --- A

Remember this operation is a simple unit-to-unit conversion which as we have shown cannot alter the precision of the original measurement. The distance was determined at 1.36 km; this is correct to 3 significant figures. Any change in units does not affect the precision. Therefore, the answer 1,360 m is also correct to 3 significant figures (1, 3, and 6.)

Please return to page 63 and select the right answer.

YOUR ANSWER --- C

The speed 186,272 mi per sec is a very precise figure containing 6 significant digits. In our problems, this number is too cumbersome and unnecessary in its full form. We therefore round it off to 186,000 mi per sec to make our arithmetic in a problem easier to handle. This sacrifice of the high precision of the original number is not really a serious loss because the purpose of a problem is to develop an understanding of principles, rather than to find highly precise answers.

In replacing the digits "272" with "000," we are giving up our 6-significant figure accuracy in favor of simplified arithmetic expression. But in doing so, we must recognize this act by noting that we have now reduced the number of significant figures from 6 to 3.

Please return to page 57 and select another answer.

YOUR ANSWER --- B

You're not giving the rules proper attention. Rule 4(c) states that the division process should be carried out to 1 significant figure more than the number of significant figures in the least precise measurement. Then round off to the same number of significant figures. In selecting your answer, you did not follow this rule.

Please return to page 92 and select another answer.

YOUR ANSWER --- B

You are correct. When the student presents this answer, the teacher will know that 4-significant figure precision has been maintained He will recognize that the last two zeros simply inform him there were no hundredths or tenths of grams left over.

Let's see what we have so far:

1.36 km converted to meters = 1,360 m	The 0 is not significant: it shows where the decimal point is located (understood at the end of the number).
708; 1,064; 65,008	All these 0's are significant. They are not decimal locaters; they are important digits.
14.0 sec	This 0 is significant; it points out that the precision extends to tenths of seconds.
37.00 g	Both 0's are significant; they show that the precision extends to hundredths of grams.

How about the zeros in this operation? A king-size cigarette is 8.45 cm long. To express this length in meters, we divide 8.45 by 100 and obtain 0.0845 m. (A zero is always placed before a decimal number's point to emphasize that the decimal is really there. This zero is never significant.) But is the second zero--0.0845--significant?

(12)

A Yes.

B No.

CORRECT ANSWERS:

0.1006	4 sig fig	4000.6	5 sig fig	Check your notebook answers.
143.00	5 sig fig	672.115	6 sig fig	Errors should be tracked
0.0601	3 sig fig	80004.	5 sig fig	down by applying the rule.
10.0	3 sig fig	0.00008	1 sig fig	

Now that you have learned to determine the number of significant figures in a measurement, we shall want to establish two simple rules that govern arithmetic operations on significant figures. One of these rules governs multiplication and division; the other governs addition and subtraction. We'll start with addition and subtraction.

First, remember that you can't add or subtract measurements unless they are in the same unit. That is, you can add any number of mass measurements if they are all in kg, any number of length measurements if they are all in m, and any number of time measurements if they are all in sec. <u>But you can't add kg to m or sec</u>.

To see how significant figures are handled in addition, let's take an example. Suppose you were handed a sheet of paper with the following length measurements on it:

2.6 meters
12.56 meters
0.397 meters

Recalling that the last figure in any measurement is uncertain, we recognize that the "6" in 2.6 is uncertain, the "6" in 12.56 is uncertain, and the "7" in 0.397 is uncertain. Add the numbers as they now stand. What is the sum?

(16)

A 14.557 meters.

B 15.457 meters.

C 15.557 meters.

YOUR ANSWER --- B

You are correct. In this intermediate step, we follow rule 4(b) which state that the intermediate product should be rounded off to one significant figure more than the least precise measurement. The least precise measurement has 3 significant figures (5.22 or 2.61 cm); hence the intermediate product should have 4 significant figures, or 54.08.

It is particularly interesting to notice what happens to the result if a slight error is introduced into the figures used. Since the last digits of 10.36 and 5.22 are uncertain, it is possible that we should have used 10.37 and 5.21. If these numbers are multiplied, the result is 54.0277. Rounding this number off to 4 significant figures gives 54.03. This could make a difference of 1 in the third significant figure, thus making the third figure uncertain. The error is compounded when such a result is further multiplied by a measurement having a possible error.

Please go on to page 27.

We want to find the volume of the block from 10.36 cm x 5.22 cm x 2.61 cm. We have already found the intermediate product (10.36 x 5.22) to be 54.08 cm^2. All we need do now is multiply 54.08 cm^2 x 2.61 cm. When this is done we obtain an answer of 141.1488 cm^3.

What would you say about this answer regarding the proper number of significant figures?

(23)

A The answer, volume = 141.1488 cm^3, has too few significant figures.

B The answer, volume = 141.1488 cm^3, has the correct number of significant figures.

C The answer, volume = 141.1488 cm^3, has too many significant figures.

YOUR ANSWER --- D

Groups 2 and 3 have one error each, but there are no errors in Group 1. Check the analysis below:

Group 1

not counted	1st	2nd	3rd	4th	5th	
0.	3	0	6	4		Marked correctly as 4 sig figs.
	6	2	5	4	1	Marked correctly as 5 sig figs.
0.0	8	0	5			Marked correctly as 3 sig figs.

Check carefully on the number you thought was in error according to the marked significant figure count. Be sure you understand why you made your mistake.

Please return to page 8 and select another answer.

YOUR ANSWER --- B

10 raised to the 7th power is written 10^7. The exponent "7" tells us that 10 must be written down 7 times in the multiplication process. Thus, 10^7 means:

$$10 \times 10 \times 10 \times 10 \times 10 \times 10 \times 10 = 10{,}000{,}000$$

But--since we wanted the operation to yield 100,000,000 your answer is 10 times too small.

Please return to page 39 and select another answer.

YOUR ANSWER --- B

Your addition is in error. You forgot to "carry" in the tenths column.

Please return to page 25 and select another answer.

YOUR ANSWER --- A

You are correct. Since the least precise measurement (18.37 g) contains 2 decimal places, all other measurements should be rounded off to 2 decimal places.

18.37 g	-----	18.37 g
7.160 g	-----	7.16 g
5.432 g	-----	5.43 g
3.8624 g	-----	3.86 g
		34.82 g

Subtractions are handled in exactly the same way.

NOTEBOOK ENTRY

3. Addition or subtraction with attention to significant figures.

(a) Convert all measurements to the same unit.

(b) Locate the least precise measurement (fewest number of decimal places). Round off all other measurements to the same number of places.

(c) Add or subtract the rounded values.

(d) For addition or subtraction, the result should have the same number of decimal places as the least precise measurement.

Do the following subtraction with attention to significant figures.

$$\begin{array}{r} 43.6 \text{ cm} \\ -\ 21.862 \text{ cm} \\ \hline \end{array}$$

What is the best answer?

(20)

A 21.738 cm

B 21.7 cm

YOUR ANSWER --- B

You're guessing. That's not the recorded figure. You had better review the notebook entry.

Please go on to page 33.

Look at the addition example below. Since the least precise measurement (18.37 g) contains 2 decimal places, all other measurements should be rounded off to 2 decimal places.

18.37 g	-----	18.37 g
7.160 g	-----	7.16 g
5.432 g	-----	5.43 g
3.8624 g	-----	3.86 g
		34.82 g

Subtractions are handled in exactly the same way.

NOTEBOOK ENTRY

3. Addition or subtraction with attention to significant figures:

(a) Convert all measurements to the same unit.

(b) Locate the least precise measurement (fewest number of decimal places). Round all other measurements to the same number of places.

(c) Add or subtract the rounded values.

(d) For addition or subtraction, the result should have the same number of decimal places as the least precise measurement.

(Also copy the addition example above as an illustration of the way this operation is handled with regard to significant figures.)

Please return to page 93 and select another answer.

YOUR ANSWER --- A

This had to be a slip! We had re-emphasized that you cannot show the desired number of significant figures merely by stringing zeros out in a line. When you write "5,000 ft." without any qualifying statement, nobody can say for sure whether this number contains 4, 3, 2, or 1 significant figures.

Please return to page 102 and select another answer.

YOUR ANSWER --- B

You have correctly added the two zeros to the coefficient to indicate that there are 3 significant figures, but you have figured the exponent incorrectly. How many places did you have to move the decimal point to change 300,000 to 3.00? This will tell you how to correct the exponent.

Please return to page 115 and select another answer.

YOUR ANSWER --- B

Try again. In our determination of the width of the dollar bill, we arrived at an answer of 6.57 cm. We recognized that this result contained 3 significant figures, since each one of the digits told an important part of the story. Even the last figure, the uncertain one, is still to be considered significant since it contributes to the possibility that the measurement will approach the true width more closely.

The length of the bill is 15.58 cm. For exactly the same reason, all of these digits are significant, even the last uncertain one.

Please return to page 109 and select another answer.

This page has been inserted to maintain continuity of text. It is not intended to convey lesson information.

YOUR ANSWER --- A

Incorrect. The precision as originally established by the actual measuring instrument is 135.77 cm, correct to 5 significant figures. Once this measurement has been made, there is nothing you can do to change its precision. Going from cm to m by dividing by 100 merely changes the unit expressing the answer. Since the number of significant figures is fixed, the precision remains the same.

Please return to page 91 and select another answer.

YOUR ANSWER --- A

Right! It pays to keep an accurate notebook.

Before continuing, please turn to page 128 in the blue appendix.

This brings to a close the formal lesson on significant figures. You will make use of these understandings every time you do a numberical problem in physics.

As we mentioned in the introduction to this lesson, the next part of our job is to review powers of ten and scientific notation. This subject is included in most elementary algebra courses in high school, but you may have studied it some time ago. A review certainly should be helpful.

The power to which any number is raised tells you how many times the number is to be multiplied by itself. For example:

10^2 means $10 \times 10 = 100$
10^3 means $10 \times 10 \times 10 = 1{,}000$
10^4 means $10 \times 10 \times 10 \times 10 = 10{,}000$
10^5 means $10 \times 10 \times 10 \times 10 \times 10 = 100{,}000$

As you see, the numerical value of the power (the exponent) informs you how many times you must write the "10" in the multiplications process. Thus, the exponent "3" in 10^3 tells you to write 10 three times and place "x" signs between each of them.

To what power must 10 be raised in order to yield 100,000,000?

(27)

A 6

B 7

C 8

YOUR ANSWER --- B

Your exponent is wrong. Ten billion is ten times a thousand million. Let us first write it out with all its zeros.

$$10 \times 1{,}000 \times 1{,}000{,}000 = 10{,}000{,}000{,}000.$$

Now count the zeros. Since the number of zeros should tell you the value of the exponent, you can see why your selection was wrong.

Please return to page 106 and select another answer.

YOUR ANSWER --- A

Sorry! When you replace significant digits with zeros, such as 186,272 by 186,000, to obtain an approximation, you reduce the precision of the original number. The word "approximation" signifies less precision. You must show this reduction in precision by including fewer significant figures in your answer.

Please return to page 57 and select another answer.

YOUR ANSWER --- B

Incorrect. One-billionth is one-thousandth of one millionth. It can be written this way:

one-billionth = 0.001 x 0.000001 = 0.000000001

How many places to the right must the decimal be moved to place it just to the right of the "1"? This will give you the value of the exponent of 10.

Please return to page 5 and select another answer.

YOUR ANSWER --- A

Make the measurement again. You are misreading the number of millimeter divisions beyond the 1-cm length.

Please return to page 12 and select another answer.

YOUR ANSWER --- C

You missed the point. The measurements should be rounded off to the same number of decimal places as the least precise one. The least precise measurement given is 18.37 g. Since this has only 2 decimal places, all other quantities should be rounded off to 2 decimal places.

Please return to page 89 and select another answer.

YOUR ANSWER --- B

In order for the block to be 2.12 cm in length, its edge would have to fall short of the dotted imaginary marker by much more than it does. Actually, the edge falls short by about 1 imaginary division. To yield an answer of 2.12 cm, the edge would have to fall short of the dotted marker by 3 imaginary divisions.

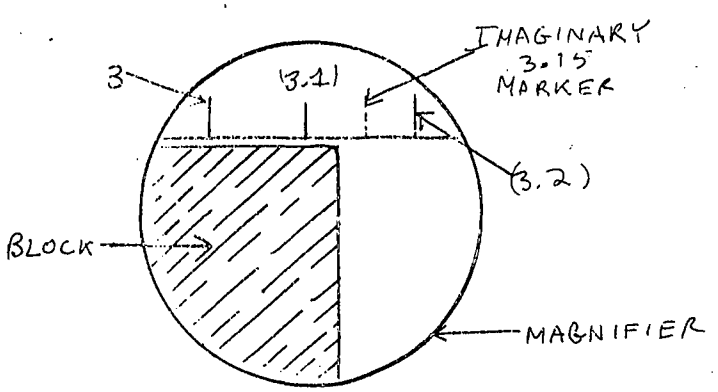

Figure 2.

Please return to page 10 and select another answer.

YOUR ANSWER --- A

There are no errors in Group 1. Check the analysis below:

Group 1

not counted	1st	2nd	3rd	4th	5th	
0.	3	6	0	4		Marked correctly as 4 sig figs.
	6	2	5	4	1	Marked correctly as 5 sig figs.
0.0	8	0	5			Marked correctly as 3 sig figs.

Check carefully on the number you thought was in error according to the marked significant figure count. Be sure you understand why you made your mistake.

Please return to page 8 and select another answer.

YOUR ANSWER ---- A

You rounded off two of the measurements incorrectly. The quantity 2.6 needs no rounding off; the quantity 12.56 should be rounded off to 12.6; the quantity 0.397 should be rounded off to 0.4.

Please return to page 18 and select another answer.

YOUR ANSWER --- D

Your choice is incorrect. To arrive at 3.655 from 3,655,000, you had to move the decimal point 6 places to the left, not 7. Hence, the exponent should be 6 and the number should read:

$$3.655 \times 10^6$$

Please return to page 60 and select another answer.

YOUR ANSWER --- B

For the block to be 2.16 cm in length, its edge would have to extend beyond the dotted imaginary marker. But the edge falls short of the midway marker; hence your answer is inaccurate.

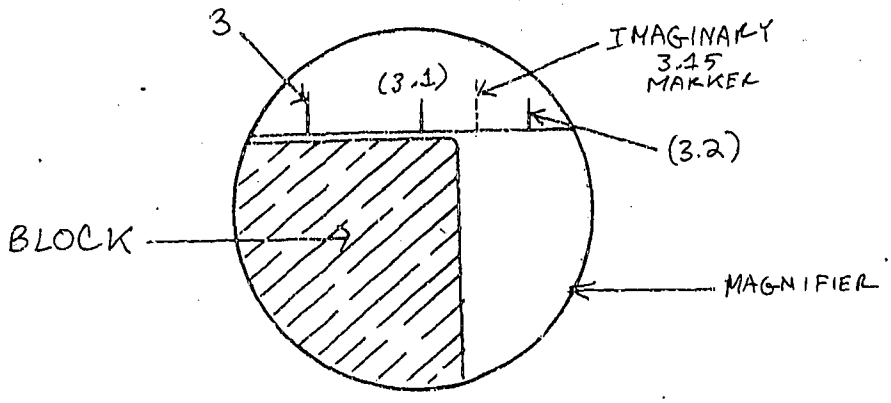

Figure 2.

Please return to page 14 and select another answer.

YOUR ANSWER --- B

There is an error in Group 2. Notice:

Group 2

not counted	1st	2nd	3rd	4th	5th	
	6	2	0	0	1	5 sig figs--right.
	1	0	0	0		ERROR--This group is labeled 1 sig fig. Actually 4 sig figs.
0.00	4	0				2 sig figs--right.

Note that each of the zeros in 1.000 is significant. This kind of result indicates that the instrument was sufficiently precise to read to 4 significant figures but that the tenths, hundredths, and thousandths places all happen to be zero.

Please return to page 8 and select another answer.

YOUR ANSWER --- A

Incorrect. If you had been asked to write 600,000 as a power of ten, your answer would be acceptable. However, you were asked to write it in scientific notation, which requires that the coefficient should have only 1 digit before the decimal point. Look again at the expression you chose:

$$600 \times 10^3$$

In this expression the decimal point is understood after the last zero in "600" or:

$$600. \times 10^3$$

Thus, you have placed 3 digits instead of 1 before the decimal point.

Please return to page 97 and select another answer.

YOUR ANSWER --- B

You are correct. The original measurement (1.36 km) contains 3 significant figures. When the expression is changed to meters, precision is unaltered. Thus, 1,360 m is correct to 3 significant figures and the final zero is not counted as a significant figure.

NOTEBOOK ENTRY

Lesson 2

SIGNIFICANT FIGURES

1. The number of significant figures in a measurement is determined by the precision of the measuring instrument. Converting a measurement from one unit to another in the metric system does not alter the number of significant figures nor the precision of the measurement.

Just because the final zero in our example turned out to be insignificant, you must not think that all final zeros fall into this classification. Later we will give you a simple rule for determining the number of significant figures in any number. For the present, do not worry about the status of final zeros.

As the next step in our study, let us consider an example where a zero appears in the answer, but is not a final zero. How many significant figures would you say are contained in the distance 304 meters?

(9)

A Three.

B Two.

YOUR ANSWER --- A

By stating that the width of his dollar bill is 6.584 cm, your friend has given a result in four significant figures. A greater number of significant figures, when correctly obtained, implies a greater precision not less precision. The question is: Did he make the measurement properly?

Please return to page 73 and select another answer.

YOUR ANSWER --- A

You've gone too far. We did say that the least precise measurement contains 3 significant figures (5.22 cm or 2.61 cm), and you proceeded to round the intermediate step to the same number. Now look at rule 4(b). This says that you are to round back the intermediate product to 1 significant figure more than the number in the least precise value. You went beyond this, didn't you?

Please return to page 15 and select another answer.

YOUR ANSWER --- B

Not according to the rules. If you multiply 54.08 cm^2 by 2.61 cm, you do get the answer 141.1488 cm^3. But if we retain all these digits in the answer, we give the impression that only the last "8" is uncertain. This is not true. The volume product should have no more significant figures than the least precise of the original measurements. The least precise measurements were 5.22 cm and 2.61 cm. How many significant figures does each of these have? Compare this with the number of significant figures in 141.1488 cm^3. So, the answer you selected cannot be right.

Please return to page 27 and select another answer.

YOUR ANSWER --- C

This answer still lacks something. The original weight was measured to 4-significant figure precision. Removing 0.43 g of sugar does not change the ability of the balance to measure to 4 significant figues. Why express the result to only 3 significant figures? This way, the teacher would think the student hadn't bothered to estimate to the hundredth of a gram.

Please return to page 70 and select another answer.

YOUR ANSWER --- B

You are correct. Good thinking! You remembered to apply the rule that unit conversions do not affect the precision of the measurement. So here we see a circumstance where a zero after a decimal point is not significant. Remember the timing example in which the zero after the decimal point in 14.0 sec was significant? How are we going to state a single rule that takes care of all these cases? You'll see.

In 1955, the speed of light was measured as 186,272 miles per second. This determination has 6-significant figure precision. For our purposes in physics, we should like to round this figure off to 186,000 miles per second. What about the 3 final zeros in this operation? Are they significant?

(13)

A Yes.

B No.

C I'm not sure.

YOUR ANSWER --- C

You didn't go far enough. An intermediate step such as this should be rounded off to 1 significant figure more than the least precise measurement. The least precise measurement (5.22 cm or 2.61 cm) contains 3 significant figures, so the area step should be rounded off to 4 significant figures. You rounded back to 5.

Please return to page 15 and select another answer.

YOUR ANSWER --- A

You have added incorrectly. You forgot to "carry" in the units column.

Please return to page 25 and select another answer.

YOUR ANSWER --- B

You are correct. The decimal point must be moved 6 places to the left in order to go from 6,450,000 to 6.45; hence the exponent of the "10" is 6.

NOTEBOOK ENTRY

(topic 5)

(b) When a number greater than 1 is to be written in scientific notation, move the decimal point to the left, if necessary to place it immediately after the first digit. The number of places moved by the decimal point gives the correct positive exponent of 10.

The list below presents 4 numbers and their equivalents in scientific notation. Only one of the items in this list is entirely correct. Which one is it?

(32)

A $5{,}430 = 54.3 \times 10^2$

B $72{,}800 = 7.28 \times 10^4$

C $35 = 3.5 \times 10^0$

D $3{,}655{,}000 = 3.655 \times 10^7$

This page has been inserted to maintain continuity of text. It is not intended to convey lesson information.

YOUR ANSWER --- B

You are correct. 43.6 cm - 21.862 cm rounds off to 43.6 cm - 21.8 cm, which turns out to be 21.7 cm.

NOTEBOOK CHECK

Refer to item 2, Lesson 2. This is the rule for determining the number of significant figures in a measurement. Under this is a group of samples. The fourth sample of the group is:

(21)

A	4000.6	5
B	672.115	6
C	10.0	3
D	0.1006	4

YOUR ANSWER --- B

You are correct. As we pointed out, the precision of a measurement in terms of significant figures depends only upon the measuring instrument and never upon the particular unit being used. In going from centimeters to meters, we merely change our unit system. We do not affect the precision because this was originally established by the type of measuring instrument used. Thus, despite the fact that 1.3577 is correct to the fourth decimal place compared to 135.77 which is correct to the second decimal place, the two expressions have exactly the same precision since both contained 5 significant figures.

Try another example with a slightly different twist to check your understanding. The distance between two houses is measured as 1.36 km. This figure is then converted to meters by multiplying by 1,000. The answer is 1,360 meters.

Here is our question: Is the zero in 1,360 counted as a significant figure?

(8)

A Yes.

B No.

YOUR ANSWER --- A

Your counting is faulty. How many places did you move the decimal point to go from 0.074483 to 7.4483? You moved it 2 places, right? Then why show an exponent of -3?

Please return to page 13 and select another answer.

YOUR ANSWER --- A

Somehow you missed the point in our last discussion. In this particular number, all the figures are significant whether they appear before or after the decimal point. Very shortly we will develop a few simple rules for determining the number of significant figures in any number, but in this case our judgment of the number of significant figures is not complicated enough to require any special rule.

Please return to page 109 and select another answer.

YOUR ANSWER --- A

You are correct. The coefficient had 3 significant figures (3.00), and the exponent is correct.

NOTEBOOK ENTRY

(topic 5)

(d) The number of significant figures in any measurement is given by the number of digits in the coefficient, including all zeros.

Examples

$5.00 \times 10^3 = 5{,}000$, in which the first 3 digits are significant.
$710.00 \times 10^4 = 7{,}100{,}000$, in which the first 5 digits are significant.
$1.000 \times 10^5 = 10{,}000$, in which the first 4 digits are significant.

Please go on to page 67.

Please go to the Worksheet on page 129 for the last audio tape.

You have now completed the study portion of Lesson 2 and your Study Guide Computer Card and A V Computer Card should be properly punched in accordance with your performance in this Lesson.

You should now proceed to complete your homework reading and problem assignment. The problem solutions must be clearly written out on 8½" by 11" ruled, white paper, and then submitted with your name, date, and identification number. Your instructor will grade your problem work in terms of an objective preselected scale on a Problem Evaluation Computer Card and add this result to your computer profile.

You are eligible for the Post Test for this Lesson only after your homework problem solutions have been submitted. You may then request the Post Test which is to be answered on a Post Test Computer Card.

Upon completion of the Post Test, you may prepare for the next Lesson by requesting the appropriate:

1. study guide
2. program control matrix
3. set of computer cards for the lesson
4. audio tape

If films or other visual aids are needed for this lesson, you will be so informed when you reach the point where they are required. Requisition these aids as you reach them.

Good Luck!

YOUR ANSWER --- B

You didn't round off far enough. The least precise measurement is 18.37 with 2 decimal places. Therefore all the measurements should be rounded off to 2 decimal places and then added.

Please return to page 89 and select another answer.

This page has been inserted to maintain continuity of text. It is not intended to convey lesson information.

YOUR ANSWER --- B

You are correct. The zero after the decimal point is added for a specific purpose: It shows that the watch can measure to tenth-of-a-second precision but, in this particular case, there were no tenths left over.

Try this one. A physics student measures a mass of sugar by means of a pan balance. Since this balance can determine masses to the nearest hundredth of a gram, he uses this capability and obtains a mass of 37.43 g. Now, carefully and slowly he removes sugar grains one by one until he has subtracted exactly 0.43 g. How should he record the resulting mass of sugar still left on the balance if he wants to inform his teacher of the precision to which he has worked?

(11)

A 37 g.

B 37.00 g.

C 37.0 g.

YOUR ANSWER --- D

That's not the answer. You had better review the notebook entry.

Please go on to page 72.

Look at the addition example below. Since the least precise measurement (18.37 g) contains 2 decimal places, all other measurements should be rounded off to 2 decimal places.

18.37	g	-----	18.37 g
7.160	g	-----	7.16 g
5.432	g	-----	5.43 g
3.8624	g	-----	3.86 g
			34.82 g

Subtractions are handled in exactly the same way.

NOTEBOOK ENTRY

3. Addition or subtraction with attention to significant figures:

   (a) Convert all measurements to the same unit.

   (b) Locate the least precise measurement (fewest number of decimal places). Round all other measurements to the same number of places.

   (c) Add or subtract the rounded values.

   (d) For addition or subtraction, the result should have the same number of decimal places as the least precise measurement.

(Also copy the addition example above as an illustration of the way this operation is handled with regard to significant figures.)

Please return to page 93 and select another answer.

YOUR ANSWER --- B

You are correct. Perhaps your measurement was as low as 1.43 cm or as high as 1.47 cm. This does not mean inaccuracy on your part. It may be that your rule differs slightly from ours, or that the plate used to print your bill had a slight variation. It is important that you recognize that each of the 3 digits in 1.45 is meaningful or significant. Although the 1 and 4 are absolutely certain, the 5 is uncertain but still significant because it brings the answer closer to greater precision.

Widths and lengths of dollar bills are not quite so uniform. Nonetheless, we would like you to measure the width of your dollar bill to the nearest 0.01 cm and write the answer. We have measured our dollar bill and find it to be 6.57 cm wide. Although this may not match your measurement exactly, the two should be close. Certainly, your answer should have the same number of significant figures; 3 all told. Next, let us imagine your friend measures the width of his dollar bill with your rule and announces that its width is 6.584 cm. Which of the following would be the best answer to give him?

(5)

A "You have not measured with enough precision."

B "You are getting better precision with the rule; you were probably more careful than I was."

C "Your answer has 4 significant figures; it is not possible to read the rule with this precision."

YOUR ANSWER --- A

The difference you obtained is correct except that no attention was paid to significant figures. Read the rule for subtraction in your notebook with attention to signif ant figures.

Please return to page 31 and select another answer.

YOUR ANSWER --- A

You are correct. In order for the block to be 2.12 cm in length, its edge would have to fall short by much more than it actually does. Hence, the estimate of the length of the block should yield an answer that is greater than 2.12 cm.

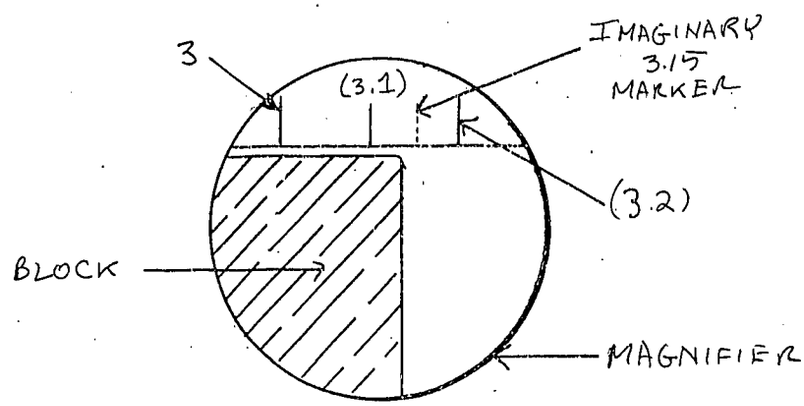

Figure 2.

You should have enough information now to return to the question you missed earlier. Please return to page 3 and select another answer.

YOUR ANSWER --- C

You slipped up! The decimal point was moved to the right. This calls for a negative exponent. Your exponent is positive, which means that your answer, $7.4483 \times 10^2 = 744.83$. This is not 0.074483.

Please return to page 13 and select another answer.

YOUR ANSWER --- A

You are correct. A zero in a whole number which falls between two other non-zero digits, as in 708, 1,064, and 613.077 is just as informative as any other digit in the same place. Hence, such zeros are significant. The same is true of more than one zero, as in 2,008 or 456,002. All these zeros are significant. Does it sound complicated? Don't be overly concerned with the question, "When is a zero significant and when isn't it?" We shall soon give you a simple rule for answering this question. We are interested now in having you understand each example as we come to it; don't try to remember every one of these as a special case.

A student has a stop watch capable of measuring time intervals to the nearest tenth of a second. He times three of his friends in a 100-meter dash and obtains this data:

Boy A -- 14.6 sec Boy B -- 14.3 sec Boy C -- 14.0 sec

You will agree, of course, that there are 3 significant figures in Boy A's time, and 3 significant figures in Boy B's time. But how many significant figures are there in Boy C's time?

(10)

A Two.

B Three.

YOUR ANSWER --- B

You are correct. In replacing the digits "272" with "000," we give up the original 6-significant figure precision in favor of simplified arithmetic expression. At the same time, we recognize we now have reduced the precision to only 3 significant figures and the zeros cannot be counted as significant.

As our last example, we are going to deal a low blow. In 1955, Beardon and Thomson published the latest value for the velocity of light in the metric system as 299,792.8 km per sec. (Note this is km, not mi per sec.) This value has 7-significant figure precision. We should like to round it off to 3 significant figures just as we did for the speed of light in mi per sec. Noting that the last four digits (___792.8) as a group is larger than 500, we have to add 1 to the first 3 digits, and then replace 792.8 with 000.

Thus, 299,792.8 km per sec rounded off to 3 significant figures becomes 300,000 km per sec. From our previous experience, we know that the last 3 zeros (that is, 300,000) are not significant. But, are the first 2 zeros significant or not? (that is, 300,000)

(14)

A Yes.

B No.

YOUR ANSWER --- C

Your choice was not right. As we shall prove later, any number raised to the zero power such as 10^0 is equal to 1. Thus, this answer says that 35 = 3.5 x 1 = 3.5. This is incorrect, of course.

Please return to page 60 and select another answer.

YOUR ANSWER --- B

You rounded off one of the measurements incorrectly. The quantity 2.6 m needs no rounding off; the quantity 12.56 should be rounded off to 12.6; the quantity 0.397 should be rounded off to 0.4.

Please return to page 18 and select another answer.

YOUR ANSWER --- B

But was he? You have measured the width of a dollar bill. You undoubtedly had a bit of trouble estimating the third significant figure even with the help of a magnifying glass. Can you imagine any human being with eyesight sharp enough to estimate to the nearest thousandth of a cm with an ordinary rule? Of course not. You must conclude that your friend either place his decimal in the wrong place or is completely in error in reading the scale.

Please return to page 73 and select another answer.

YOUR ANSWER --- A

This answer contains two errors in thinking. First, the sum 15.557 m suggests that all digits are certain except the final "7." This is incorrect and misleading. Secondly, there is something we can do about it! Think a bit. What do we generally do with any measurement which, for one reason or another, contains more digits that we want?

Please return to page 105 and select another answer.

YOUR ANSWER --- B

You didn't count the zero as significant, but you should have. Suppose the distance had been 314 meters or 354 meters: wouldn't you have counted the "1" and the "5" in these measurements as significant? Of course. Well, the zero in 304 is just as significant as the "1" or the "5" in the other numbers. A zero in the middle of a whole number like 304 or 7083 or 16,607 is just as significant as any other digit. The same is true of a measurement like 5,008 gm or 309 hours. All such zeros are significant.

Please return to page 52 and select another answer.

YOUR ANSWER --- A

This item is not correct with respect to the conventions of scientific notation. It should be written: 5.43×10^3.

Please return to page 60 and select another answer.

YOUR ANSWER --- When rounding off 298,792.8 to 3-significant figure precision, the result whould be 299,000.

Now, this is the result you might expect. You had 7 significant digits in the first place; you dropped 4 of these, replacing them by zeros, and added 1 to the opening group of 3 digits to obtain 299,000 km per sec. You will agree that all 3 of the digits in this answer (2, 9, and 9) are significant.

Is there any reason to think that if these first 3 digits happen to round out to 300, as in 300,000 km per sec, that all three digits (3, 0, and 0) are not significant? Nature doesn't play favorites like this, not even with numbers!

This is an unusual set of circumstances. It leads to a rather contradictory result: Sometimes we count zeros in a string as significant and sometimes we don't. We hope to clarify this shortly.

Please return to page 78 and select another answer.

YOUR ANSWER --- B

You made an incorrect choice. There is an error in the first member of this group.

30,000 should be written as 3×10^4.

Remember that, in scientific notation, the coefficient must be expressed as a single digit before the decimal point whether the latter is expressed or implied.

Please return to page 111 and select another answer.

YOUR ANSWER --- A

You are correct. For the block to be 2.16 cm in length, its edge would have to extend beyond the dotted midway marker. Thus, the actual length of the block must be less than 2.15 cm, not more than this figure.

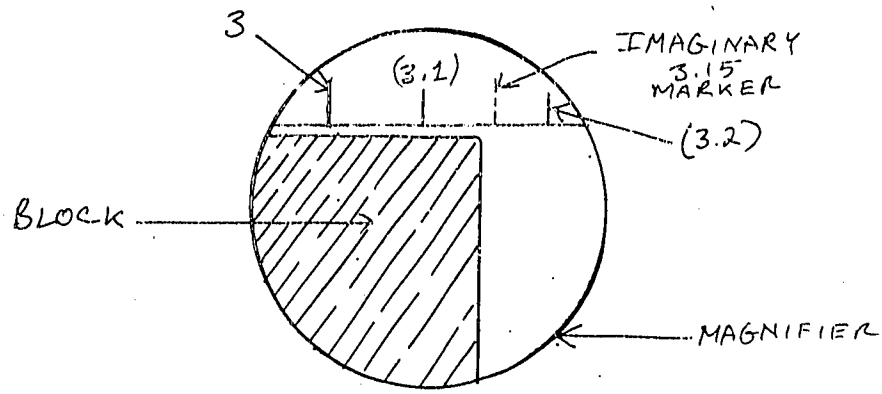

Figure 2.

You should have enough information now to return to the question you missed earlier. Please return to page 3 and select another answer.

YOUR ANSWER --- C

You are correct. In Group 2, the number 1.000 is indicated as having only 1 significant figure. Since all three zeros in 1.000 are significant, this number has 4 significant figures. In Group 3, the number 0.004 is shown as having 3 significant figures. This is incorrect since not one of the zeros is significant according to our rule.

How many significant figues are there in each of the following? Copy this list into your notebook under the rule for significant figures. Write your answers lightly in pencil until you have checked them against our answers.

NOTEBOOK ENTRY

Number	Sig. Figs.
0.1006	----------
143.00	----------
0.0601	----------
10.0	----------
4000.6	----------
672.115	----------
80004.	----------
0.00008	----------

Please turn to page 25 to obtain the right answers.

YOUR ANSWER --- C

You are correct. You've gotten the idea. Now, for practice, add the column of figures below and express the result in the proper number of significant figures.

18.37	g
7.160	g
5.432	g
3.8624	g

The sum is:

(19)

A 34.82 g

B 34.824 g

C 34.8244 g

YOUR ANSWER --- C

The errors in this group occur in the second and third members.

2,000 should be written as 2×10^3.
90,000 should be written as 9×10^4.

Remember that, in scientific notation, the coefficient must be expressed as a single digit before the decimal point, whether the latter is written or implied.

Please return to page 111 and select another answer.

YOUR ANSWER --- C

You are correct. The first 3 digits (1, 5, and 5) are absolutely certain; the last digit (8) is uncertain but is still significant. Hence the number 15.58 has 4 significant figures.

Before continuing, please turn to page 126 in the blue appendix.

So you see that a given measuring instrument can give varying numbers of significant figures depending upon the magnitude of the dimensions being measured. The length of the bill is great enough to enable the rule to provide 4 significant figures. But a larger object, such as a table-top, might yield the result 135.77 cm, thus expressing the length to 5 significant figures.

The precision of a measurement in terms of significant figures depends only upon the measuring instrument and never upon the particular unit being used. Consider the table-top measurement of 135.77 cm. If we wish, we can express this length in meters by dividing the number by 100. Hence, the length of the table is 1.3577 meters. Now let's think clearly. Did the simple process of division by 100 increase the precision of the measurement?

(7)

A Yes.

B No.

C I'm not sure.

YOUR ANSWER --- C

You are correct. In this particular problem we saw that the least precise measurements had only 3 significant figures. Therefore, according to rule 4(a), the final product should have no more than 3 significant figures. But the answer, volume = 141.1488 cm^3, is misleading because it indicates 7 significant figures.

Rounding this figure off to 3 significant figures yields the answer: volume = 141 cm^3. This is correct.

Most students have an uncomfortable feeling about a result like this because it appears to be much less precise than the original figures. The length, width, and thickness are, respectively, 10.36 cm, 5.22 cm, and 2.61 cm. These are all correct to the nearest hundredth of a centimeter, yet the answer is only correct to the nearest whole cubic centimeter. But if you remember that all of the original dimensions were uncertain in the last decimal place, and that uncertainties multiplied by uncertainties compound the error, you can perhaps realize why any result carried further than 141 cm^3 would give a false impression of the precision with which the measurements were taken.

Now let's try a division with attention to significant figures. Divide 866.38 by 27. According to rule 4(c), how many significant figures should the quotient have?

(24)

A 2

B 5

YOUR ANSWER --- B

You are correct. All the rules for significant figures have been observed in Group 2.

1.87 + 0.586 = 2.46	0.454 x 51 = 23
5.5 - 3.276 = 2.2	635 ÷ 12 = 53

Note that no answer has more significant figures than the least precise measurement. That's the way to do it!

NOTEBOOK CHECK

Refer to item 3, Lesson 2. You should have a sample showing how attention is given to significant figures in addition. What was the sum obtained in this sample?

(26)

A 34.82

B 34.96

C 41.63

D 56.88

YOUR ANSWER --- B

You are correct. To go from 0.074483 to 7.4483, the decimal point had to be moved 2 places to the right. Thus, the exponent of 10 is -2, yielding 10^{-2} as the power of ten.

A practice session is called for here. We are going to mix numbers greater than 1 and numbers smaller than 1. Be careful! Check each of the examples in the groups below. Then find the only group in which all the expressions are entirely correct.

Group 1	Group 2	Group 3
$4037 = 4.037 \times 10^{3}$	$0.000856 = 8.56 \times 10^{-4}$	$0.544 = 5.44 \times 10^{-1}$
$0.0046 = 4.6 \times 10^{-3}$	$0.03306 = 3.306 \times 10^{-2}$	$1001 = 1.001 \times 10^{3}$
$736.4 = 7.364 \times 10^{2}$	$1701 = 1.701 \times 10^{3}$	$0.000008 = 8 \times 10^{5}$
$0.0707 = 7.07 \times 10^{-2}$	$6464.6 = 6.4646 \times 10^{4}$	$245.33 = 2.4533 \times 10^{2}$

(35)

A Group 1 is entirely correct.

B Group 2 is entirely correct.

C Group 3 is entirely correct.

YOUR ANSWER --- C

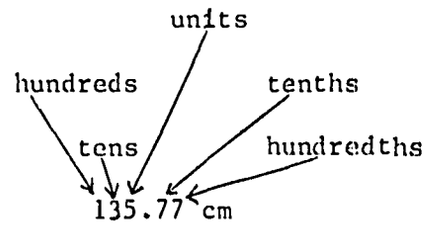

We have seen that the measurement expresses the length of a table determined by a centimeter rule to the nearest hundredth of a centimeter. We can then say this measurement is correct to 5 significant figures. This precision is possible because the rule is divided into centimeters, and further subdivided into millimeters, or tenths of centimeters. The final digit (the last 7) was obtained by estimating as closely as possible the fraction of a millimeter by which the table extended beyond 135.7 cm.

Once we write 135.77 cm as the length, we have irrevocably established the precision to which we are working. Our length is correct to 5 significant figues, no more, no less. Should we wish to change the expression to meters (by dividing the number of cm by 100), we do not alter the number of significant figures: 135.77/100 = 1.3577. There are still 5 significant figures. Hence the precision of the measurement remains unchanged.

Please return to page 91 and select another answer.

YOUR ANSWER --- A

You are correct. Ten billion is:

$$10 \times 1{,}000 \times 1{,}000{,}000 = 10{,}000{,}000{,}000$$

There are ten zeros in 10,000,000,000; hence the exponent is 10, and the power of ten is 10^{10}.

NOTEBOOK ENTRY

5. Powers-of-10 and Scientific Notation

(a) The exponent of a number written as a power of ten indicates the number of zeros following the "1."

Examples:

10^3 = 1,000, which has 3 zeros.

10^5 = 100,000, which has 5 zeros.

Please go on to page 97.

Let's go ahead. Consider a number like 5,000. Since 5,000 is 5 x 1,000, we can write it this way:

$$5{,}000 = 5 \times 1{,}000 = 5 \times 10^3$$

Another example: 800,000 can be written several ways:

$$800{,}000 = 800 \times 1{,}000 = 800 \times 10^3$$
$$\text{or } 800{,}000 = 80 \times 10{,}000 = 80 \times 10^4$$
$$\text{or } 800{,}000 = 8 \times 100{,}000 = 8 \times 10^5$$

All of these ways of writing 800,000 are correct. In each of these expressions, the number before the "x" sign is called the <u>coefficient</u>. In the top expression, the coefficient is 800, in the middle one it is 80, and in the last expression it is 8. In order to standardize our work in scientific measurements and calculations, we establish the following rule: The coefficient should always be written as a single digit before the decimal point. If a decimal point is not shown, it is <u>understood</u> at the end of the number. Therefore, of the three ways of writing 800,000, shown above, 8×10^5 is the proper form for <u>scientific notation</u>.

Similarly, in scientific notation,

40,000 is written as 4×10^4
and 7,000,000 is written as 7×10^6

How would you write 600,000 in scientific notation?

(29)

A 600×10^3

B 6×10^5

YOUR ANSWER --- A

If there were truly only 2 significant figures in 14.0 sec, why shouldn't we write it as merely 14 sec? Doesn't the final zero in this case show the timer was measuring to 3-significant figure precision but the last digit happened to be a zero? In other words, the zero is added to show the watch can measure to tenths of seconds but that there were no tenths left over in this particular measurement.

Please return to page 77 and select another answer.

YOUR ANSWER --- C

A wild guess! It is not the answer. You had better review the notebook entry.

Please go on to page 100.

Look at the addition example below. Since the least precise measurement (18.37 g) contains 2 decimal places, all other measurements should be rounded off to 2 decimal places.

18.37 g	-----	18.37 g
7.160 g	-----	7.16 g
5.432 g	-----	5.43 g
3.8624 g	-----	3.86 g
		34.82 g

Subtractions are handled in exactly the same way.

NOTEBOOK ENTRY

3. Addition or subtraction with attention to significant figures:

(a) Convert all measurements to the same unit.

(b) Locate the least precise measurement (fewest number of decimal places). Round all other measurements to the same number of places.

(c) Add or subtract the rounded values.

(d) For addition or subtraction, the result should have the same number of decimal places as the least precise measurement.

(Also copy the addition example above as an illustration of the way this operation is handled with regard to significant figures.)

Please return to page 93 and select another answer.

YOUR ANSWER --- A

You are correct. In each item in Group 1, all rules were rigorously observed. Good work.

Now let's fulfill a promise made some time back.

You will recall there is one particular situation where you cannot tell how many significant figures there are in a number unless you know the steps that led to the final value. For example, suppose you are handed a sheet of paper on which is written, "The street I live on is 5,000 ft. long."

What does this mean? Is the street precisely 5,000 ft. long? Did your friend use a measuring instrument that permitted 4-significant figure precision? Or 3? Or 2? <u>There is no way to determine the answer just by looking at the number.</u>

You might ask, "What did you use to measure the length of the street?" and be answered, "I estimated it by eye."

The eye is a poor instrument for measuring long distances, so a justifiable conclusion would be that the <u>true</u> length of his street might be anywhere between 4,000 and 6,000 ft. Therefore, even the "5" in 5,000 ft. is uncertain. Thus the 3 zeros must <u>not</u> be significant. In scientific notation, you could write the street length as 5×10^3. This way, you have positively indicated that only the "5" is significant.

Please go on to page 102.

Suppose you know from experience that your friend has a good "eye" for distances. Therefore you might assume that the "5" is certain but that the length could have been anywhere from 5,000 to 5,099. This makes the first zero certain. Thus, the first two figures are significant, and the last 2 are not. You could show this by writing the length of the street as 5.0×10^3. Notice what was done. A zero was added after the decimal point, thus making this zero significant.

Let's go further. Assume that your friend used a foot-rule 5,000 times in measuring the street. He had to be somewhat inaccurate, and possibly missed a count or so. Anyway, you feel that the true street length is somewhere between 5,000 and 5,010 ft. You're sure of the "5.0_" portion, but the second zero is uncertain. Therefore, this measurement has 3-significant figure precision. Now you can write the street length as 5.00×10^3 feet.

You should have the idea now To express a number with a string of zeros in scientific notation, you tell your reader just how many significant figures it contains by adding the correct number of zeros after the decimal point.

Finally, if the street measurements were sufficiently precise to depend upon within a foot or so, this would give the number a 4-significant figure value.

How would you indicate that there were 4 significant figures?

(36)

A By writing 5,000 ft.

B By writing 5.000×10^3 ft.

This page has been inserted to maintain continuity of text. It is not intended to convey lesson information.

YOUR ANSWER --- C

Close, but not good enough. Make the measurement again, using the 10-cm mark on the rule as the index, or starting point. Line this up very carefully with one horizontal leg of the E; then make your estimate carefully. Remember, you are supposed to be measuring the height of the letter E.

Please return to page 12 and select another answer.

YOUR ANSWER --- C

You are correct. But how about significant figures? Look here:

2.6	m	The "6" is uncertain.
12.56	m	The "6" is uncertain.
0.397	m	The "7" is uncertain.

15.557 m In this sum, each digit of the decimal portion (.557) has been obtained by adding at least one uncertain digit to the others. Therefore, the entire decimal portion is uncertain. We have seen that it is useless to express a measurement with more than one uncertain digit at the end of it, but this one has 3 uncertain digits. What does this suggest that we ought to do?

(17)

A Leave the sum as it stands since there is nothing we can do about it.

B Round off the sum to 15.6 m.

C Round off the sum to 15.5 m.

YOUR ANSWER --- C

You are correct. 10^8 means:

$$10 \times 10 \times 10 \times 10 \times 10 \times 10 \times 10 \times 10 = 100{,}000{,}000$$

Count the zeros in 100,000,000. There are 8 of them. Thus, we may conclude that in a power of 10, the numerical value of the power tells you the number of zeros after the "1" in the number. For example:

$10^2 = 100$	The "2" tells you that there are 2 zeros after the "1" in "100."
$10^{11} = 100{,}000{,}000{,}000$	The "11" tells you that there are 11 zeros after the "1."

In the United States, the word "billion" means one thousand million. (Incidentally, in Great Britain, "billion" represents a million million. We shall consistently use the U. S. equivalent.)

Which of the powers of ten below expresses ten billion?

(28)

A 10^{10}

B 10^{12}

YOUR ANSWER --- C

Although you have expressed 300,000 correctly in scientific notation, you have not shown that the number has 3 significant figures. To show this, you must add 2 zeros after the decimal point (understood), giving you a total of 3 significant figures in the coefficient.

Please return to page 115 and select another answer.

This page has been inserted to maintain continuity of text. It is not intended to convey lesson information.

YOUR ANSWER --- C

You are correct. An ordinary cm rule cannot measure the width of a dollar bill to 4 significant figures. The best it can do is provide 3 significant figures.

Remember that the last figure in any measurement is always uncertain since it is an estimate by eye. The question is, "Can an ordinary cm rule give measurements of more than 3 significant figures in any measurement?" You will note that we emphasized width of a dollar bill in the first sentence above. How about the length of the same bill?

Check us on this: A measurement with our rule gives the length of a dollar bill as 15.58 cm. Your bill may be slightly longer or shorter than this (±1.5 mm). How many significant figures does this answer contain?

(6)

A 2

B 3

C 4

YOUR ANSWER --- A

This is the fifth sample, not the fourth.

If you get even one notebook check wrong, you MUST be guessing. Below is a review of the correct listing for you.

	Number	Sig Figs
1.	0.1006	4
2.	143.00	5
3.	0.0601	3
4.	10.0	3
5.	4000.6	5
6.	672.115	6
7.	80004.	5
8.	0.00008	1

Please return to page 62 and select another answer.

YOUR ANSWER --- B

You are correct. The rule in scientific notation is that the coefficient should have only 1 digit before the decimal point. In 6×10^5 we really have $6. \times 10^5$, but we normally do not write the decimal point in such cases.

Only one of the groups below is <u>entirely</u> correct with respect to scientific notation. Which one is it?

Group 1		Group 3
$600 = 6 \times 10^2$	$30{,}000 = 30 \times 10^3$	$90{,}000 = 9 \times 10^4$
$2{,}000 = 20 \times 10^2$	$8{,}000 = 8 \times 10^3$	$3{,}000 = 3 \times 10^3$
$90{,}000 = 90 \times 10^3$	$200 = 2 \times 10^2$	$400 = 4 \times 10^2$

(30)

A Group 3 is entirely correct.

B Group 2 is entirely correct.

C Group 1 is entirely correct.

YOUR ANSWER --- A

No. You have the right idea about the position of the decimal point, but you didn't count correctly the places moved by the decimal point. Note:

$$6{,}450{,}000 = 6\ .\ 4\ 5\ 0\ 0\ 0\ 0 \times 10^{?}$$

$$6\ 5\ 4\ 3\ 2\ 1$$

How many places to the left did you move the decimal point to go from 6,450,000 to 6.45? What should be the exponent of 10?

Please return to page 117 and select another answer.

This page has been inserted to maintain contuity of text. It is not intended to convey lesson information.

This page has been inserted to maintain contuity of text. It is not intended to convey lesson information.

YOUR ANSWER --- B

You are correct. To be certain that you really have the idea, look over the following additional examples. All of these are correct.

8,000 precise to 1 sig. fig. = 8×10^3
25,000 precise to 2 sig. fig. = 2.5×10^4
25,000 precise to 4 sig. fig. = 2.500×10^4
270,000 precise to 2 sig. fig. = 2.7×10^5
270,000 precise to 3 sig. fig. = 2.70×10^5
270,000 precise to 6 sig. fig. = 2.70000×10^5

We'll go back now to an example we used in an earlier part of this lesson. You may remember that Beardon and Thomson, in 1955, measured the speed of light precisely at 299,792.8 km per sec. In rounding this off to 3 significant figures, we were forced to write 300,000 km per sec, but this left us unhappy because a strung-zero number like this does not provide any information about significant figures.

Now you should be able to express this rounded-off number in scientific notation so that anyone would know without doubt that the measurement had 3-significant figure precision. How would you do it?

(37)

A 3.00×10^5 km/sec

B 3.00×10^3 km/sec

C 3×10^5 km/sec

YOUR ANSWER --- C

There is an error in the 3rd item of the group. It should read:

$$0.000008 = 8 \times 10^{-6}$$

Notice that the decimal point was moved to the right. This makes the exponent negative, not positive.

Please return to page 94 and select another answer.

YOUR ANSWER --- A

Right. Good! You applied the scientific notation rule that the coefficient must be expressed as a single digit before the decimal point whether the latter is expressed or implied.

Now you are ready to write more complicated numbers in scientific notation. Suppose you want to express 175,000 in scientific notation. First, visualize the decimal point at the end of the number; thus:

175,000.

Next, move the decimal point to the left until there is one digit in front of it, thus:

1.75000

Since you have moved the decimal 5 places, you have really divided the number by 100,000. To restore the number to its original value, you must now multiply it by 100,000, or 10^5. So we have:

$$175{,}000 = 1.75 \times 10^5$$

Here are some additional examples:

$$86{,}600 = 8.66 \times 10^4$$
$$3{,}200 = 3.2 \times 10^3$$
$$76{,}000{,}000 = 7.6 \times 10^7$$

How would you express 6,450,000 in scientific notation?

(31)

A $6{,}450{,}000 = 6.45 \times 10^5$.

B $6{,}450{,}000 = 6.45 \times 10^6$.

C $6{,}450{,}000 = 6.45 \times 10^7$.

This page has been inserted to maintain continuity of text. It is not intended to convey lesson information.

This page has been inserted to maintain continuity of text. It is not intended to convey lesson information.

YOUR ANSWER --- A

This violates the firm and hard rule that unit conversions within the same measuring system do not alter the precision of the initial measurement. The original measurement was 8.45 cm, given to 3 significant figures. In converting to meters, 3 significant figures are retained. If you counted the second zero as significant, how many significant figures would the result have? This would violate the conversion rule, would it not?

Please return to page 24 and select another answer.

YOUR ANSWER --- A

Group 1 contains 2 errors in significant figures.

43.1 + 16.336 = 59.4	This one is right.
6.885 - 3.1 = 3.8	This one is right, too.
12.8 x 7 = 89.6	This one is wrong. The least precise measurement is the "7." This has one significant figure; hence the answer should be rounded off to 90. The zero in "90" is not significant.
866 ÷ 12 = 72.2	This is wrong, too. The least precise measurement is the "12", a 2-significant figure. The answer, therefore, should have 2 significant figures, that is, 72

Please return to page 4 and select another answer.

YOUR ANSWER --- B

This is the sixth sample, not the fourth

Even if you get only one notebook check wrong, you must be guessing, and you need to arrange your notebook more carefully.

Here is the correct list again.

	Number		gs
1.	0.1006		4
2.	143.00		5
3.	0.0601		3
4.	10.0		3
5.	4000.6		5
6.	672.115		6
7.	80004.		5
8.	0.00008		1

Please return to page 62 and select another answer.

YOUR ANSWER --- A

Why? To what precision did the student measure the original mass of 37.43 g? Wasn't this to 4-significant figure precision? Whatever he does in his next step does not change the ability of the balance to measure to the nearest hundredth gram. So, if he takes away 0.43 g the remaining sugar mass must be expressed to the same degree of precision as the original if he wants to inform his teacher of his precision in measurement.

Please return to page 70 and select another answer.

YOUR ANSWER --- B

This is not correct, but we have to admit it is somewhat difficult to understand the first time. Perhaps we can clear it up with another example. Suppose Beardon and Thomson had obtained a value of 298,792.8 instead of 299,792.8 km per sec for the velocity of light. To round this back to 3 significant figures, you take the last 4 digits (792.8), note that this group is larger than 500, replace the 792.8 by 000, and add 1 to the 8 of the group 298.

Write the rounded-back number on a piece of scrap paper and turn to page 85.

WORKSHEET

Please listen to Tape Segment 1 of Lesson 2 before starting this worksheet. Punch out answers to these questions on special AV Computer Card.

DATA ITEM A: The textbook value for the velocity of light is 300,000 km/sec. The measured values for the velocity of light are:

(1941) 299,776 km/sec (Birge)
(1949) 299,793 km/sec (Aslakson)
(1951) 299,790 km/sec (DuMond and Cohen)
(1955) 299,792.8 km/sec (Bearden and Thomson)

DATA ITEM B: The wavelength of green line: 5532 angstrom units = 0.00005532 cm.

QUESTIONS

1. If you were to round back the number 49.6489 to 3 significant digits, you would write it as

   A 49.6
   B 49.7
   C 49.70
   D 49.60
   E none of these.

2. An ultraviolet lamp which emits a wavelength of 2540 angstrom units may be said to emit a wavelength of

   A 2.540 cm
   B 0.0002540 cm
   C 0.0000002540 m
   D 0.00001 ft
   E none of these.

3. An angstrom unit

   A is smaller than a centimeter but larger than a millimeter.
   B is a unit of speed or velocity.
   C may be used to give precise descriptions of the color of light.
   D may, when properly handled, be used to measure elapsed time.
   E none of these.

You may now return to page 3 of the Study Guide and continue with the program.

WORKSHEET

Please listen to Tape Segment 2 of Lesson 2 before starting this worksheet. Punch out answers to these questions on special AV Computer card.

DATA ITEM A: Length of a U.S. dollar bill:

Top edge	15.61 cm
Middle	15.60 cm
Bottom	15.59 cm

QUESTIONS

4. Which one of the statements below correctly applies to the data taken in measuring the length of the dollar bill?

   A The data is in error since the length of the bill could not vary from 15.61 cm to 15.59 cm.

   B Each piece of datum contains 3 significant figures because the last digit in each is uncertain.

   C As a result of parallax, the last two digits in each measurement are uncertain.

   D Each measurement has 4 significant figures with one uncertain in each case.

5. The mean value of the measurements given in the Data Item above is

   A 15.58 cm
   B 15.59 cm
   C 15.60 cm
   D 15.61 cm
   E 15.62 cm

6. If dollar bills were laid end-to-end in a straight line, how many of them would you need to stretch over 1 km?

   A About 640.
   B About 1,560.
   C About 156.
   D About 15.6.
   E About 6,400.

You may now return to page 91 of the Study Guide and continue with the program.

WORKSHEET

DATA ITEM A: If a measurement is written as 260 ft, it may have either two or three significant digits. If it is written as 260. ft, it has 3 significant digits.

QUESTIONS

7. The number of significant digits in the measurement 5,280 ft is

A 1
B 2
C 3
D 4
E indeterminate

8. The number of significant digits in the measurement 65,200 grams is

A fewer than 3.
B 3, 4, or 5, but no more than 5.
C fewer than 3 but more than 1.
D more than 3 but fewer than 5.
E none of these is correct.

9. The number of significant digits in the measurement 186,000. mi is

A any number from 3 to 6.
B definitely 6.
C greater than 3 but less than 6.
D greater than 3 but less than 5.
E none of these is correct.

You may now return to page 7 of the Study Guide and continue with the program.

WORKSHEET

DATA ITEM A: The number 5,000,000,000,000,000,000,000,000 is 5×10^{24}.

DATA ITEM B: The number 0.000 000 000 001 6 is 1.6×10^{-12}.

QUESTIONS

10. Which one of the following is an advantage of scientific notation that was neither expressed nor implied in the tape discussion?

    A Less tendency to introduce accidental errors.
    B Permits greater speed in solving arithmetic problems.
    C Is more convenient to use with a slide rule.
    D Enables you to solve problems which are not soluble by means of ordinary notation in arithmetic.
    E All of the above were given individually as advantages of scientific notation.

11. Express the velocity of light, 186,000 mi/sec, in scientific notation. This figure is correct to three significant digits.

    A 186×10^{3} mi/sec.
    B 18.6×10^{4} mi/sec.
    C 1.86×10^{5} mi/sec.
    D 1.86×10^{6} mi/sec.
    E 1.80×10^{6} mi/sec

12. Express the number 0.000 008 366 in scientific notation with two significant digits.

    A 8.4×10^{-6}.
    B 8.4×10^{-5}.
    C 8.3×10^{-5}.
    D 8.3×10^{-6}.
    E 8.40×10^{-6}.

You may now return to page 39 in the Study Guide and continue with the program.

WORKSHEET

DATA ITEM A:

10^4 = 10 000	10^0 = 1
10^3 = 1 000	10^{-1} = 0.1
10^2 = 100	10^{-2} = 0.01
10^1 = 10	10^{-3} = 0.001

QUESTIONS

13. What is the equivalent of 18 raised to the first power?

A 18.
B zero.
C 1.8
D 0.18
E 180

14. What is the equivalent of 26.8 raised to the zero power?

A 26.8
B 2.68
C 1
D 0.268
E zero

15. What is the equivalent of zero raised to the first power?

A 1
B zero
C There is no answer; this is not a permissible process.
D Indeterminate.
E It may have any value since zero is a variable.

Please return to page 67 and complete the steps indicated there.

Have all your worksheet answers been punched out on the special AV Computer Card? You cannot receive credit unless this has been done.

HOMEWORK PROBLEMS

LESSON 2

1. Express each of the following in scientific notation:

   (a) 8 000 000 000 000
   (b) 43.456
   (c) 25
   (d) 7654.321
   (e) 7

2. Express each of the following in scientific notation:

   (a) 0.35
   (b) 0.0035
   (c) 0.000305
   (d) 0.30005
   (e) 17.636

3. Rewrite each of the following in standard arithmetic notation:

   (a) 1.2×10^{4}
   (b) 7.36×10^{-3}
   (c) 1.40000×10^{5}
   (d) 6.80×10^{6}
   (e) 9.41×10^{0}

4. Indicate the number of significant digits in each of the following. If the number is indeterminate, indicate with the letter "I".

   (a) 6000 in
   (b) 1.502 m
   (c) 15.02 m
   (d) 0.0023 ft
   (e) 50.400 mi
   (f) 56.4 cm
   (g) 2.59×10^{-4} sec
   (h) 4.00×10^{3} hr
   (i) 12,400.
   (j) 86,520

NOTE: All problems are to be solved on standard 8-1/2 x 11 inch notebook paper and numbered to correspond to the above designations. The solutions must be submitted to you instructor before you may request the Post test for this lesson. Be sure to enter your name, section, date and identification number on the submitted work.