DOCUMENT RESUME

ED 071 545 HE 003 646

TITLE	Networks for Higher Education.
INSTITUTION	Interuniversity Communications Council (EDUCOM), Princeton, N. J.
PUB DATE	13 Apr 72
NOTE	143p.; Proceedings of the EDUCOM Spring Conference, Washington, April 13, 1972
AVAILABLE FROM	EDUCOM, P.O. Box 364, Princeton, New Jersey 08540 ($5.00 for members, $6.00 for nonmembers)
EDRS PRICE	MF-$0.65 HC-$6.58
DESCRIPTORS	*Computer Programs; *Educational Technology; *Higher Education; Intercommunication; *Regional Planning; *Telecommunication

ABSTRACT

EDUCOM, the Inter University Communications Council, Inc., planned its 1972 spring conference as a forum for presentations, discussions, and informal meetings to review the present state and the future possibilities of computer networks for higher education. Speeches presented were specifically related to: (1) the current status and future plans of ARPANET, a nation-wide computer interconnection operating on a cost-effective basis; (2) the practicalities of computer network use; (3) the network plans of the National Science Foundation; (4) policy issues regarding networks with which the Office of Telecommunications policy is concerned; (5) computing activities in Canada, including the plans for a Canadian national network, a Canadian Universities Network (CANNUNET), and the Ontario Universities Network (OUN); and (6) the importance of applying existing technology to education not only in the interests of economy and efficiency, but also in the service of the basic human goals of education. (HS)

Networks for Higher Education

EDUCOM
Interuniversity Communications Council, Inc. 1972

Networks for Higher Education

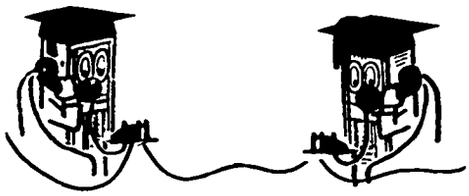

PROCEEDINGS OF THE EDUCOM SPRING CONFERENCE

April 13, 1972
Washington, D.C.

EDUCOM
The Interuniversity Communications Council, Inc.

Further information and additional copies of this book may be obtained from EDUCOM, P.O. Box 364, Princeton, New Jersey 08540. The price per copy is $5.00 for members and $6.00 to non members of EDUCOM.

Foreword

Since the sharing of resources in computer and communications technology is a major purpose of EDUCOM, it is not unnatural that EDUCOM has closely followed computer network developments and their potential for higher education. The Fall 1970 Council Meeting was devoted to the theoretical and practical aspects of national, regional, and local computer networks. Both the Spring Conference and the Fall Council Meeting in 1971 included consideration of computing networks as they have affected the financing of computing in higher education and as they have been used to obtain additional computing resources.

The continued development of regional networks to the point at which they have become generally useful to educational institutions coupled with the promise of nation-wide computer interconnection on a cost-effective basis held out by the ARPANET technology seemed to make this a particularly appropriate time for a further discussion of computer networks. Consequently, EDUCOM planned its 1972 Spring Conference as a forum for presentations, discussions, and informal meetings to review the present state and the future possibilities of networks for higher education.

The promise of computer networks and their potential role in higher education was underscored by the announcement at the Conference of the National Science Foundation's plans for a trial National Science Network. In his presentation, Dr. D. Don Aufenkamp of the Office of Computing Activities, described the trial network and its goals and invited the submission of preliminary proposals for experiments which might be conducted using the trial National Science Network. It was visualized that the experiments would involve scientific research computing, the provision of scientific information services, and educational computing.

The Spring Conference was planned as an intensive one-day meeting. The morning session consisted of five presentations, each of which examined the subject of networks for higher education from a different point of view. Dr. Larry Roberts, Director of Information Processing Techniques, ARPA, discussed the current status and future plans of ARPANET. Dr. Ruth Davis, Director, Center for Computing Science Technology, National Bureau of Standards, spoke on the practicalities of network use. Dr. D. Don Aufenkamp, Office of Computing Activities, National Science Foundation, described the Foundation's network plans. Lt. Col. Philip Enslow, Office of Telecommunications Policy, Executive Office of the President, spoke on the policy issues regarding networks with which the Office of Telecommu-

nications Policy is concerned. Dr. Eric Manning, Professor of Computer Science at the University of Waterloo, most effectively summarized computing activities north of the border, describing the plans announced by the National Science Council for a Canadian national network, a Canadian Universities Network (CANUNET), and the Ontario Universities Network (OUN). The afternoon was devoted to two sets of parallel discussion groups focusing on the technical and managerial aspects of network use.

We were particularly fortunate to have Dr. Sidney P. Marland, U.S. Commissioner of Education, present an address entitled, "Educational Technology: A Vote of Confidence," at the luncheon. Dr. Marland stressed the importance of applying existing technology to education not only in the interests of economy and efficiency, but also in the service of the basic human goals of education, a theme which was echoed in several of the afternoon discussion groups. Dr. Marland also described a number of projects funded by the Office of Education which apply computing technology to higher education and outlined a reorganization within the Office of Education which should permit a more effective focusing of attention on the problems of applying technology to education.

The Program Chairman, Dr. William Atchison, Director of the Computer Science Center at the University of Maryland, who is also a Trustee of EDUCOM and Council Chairman-elect, did an outstanding job in planning the Conference. The enthusiastic participation of conferees in the discussion groups and the quality of the major presentations reflect the time and effort which he devoted to preparing the program. I want to take this opportunity to thank Dr. Atchison, the members of his Program Committee, and all of the panel participants who not only contributed their time at the Conference, but also cooperated in the preparation of their presentations for this proceedings.

Henry Chauncey

Contents

SUPPLEMENTS

Introduction

During the last few years several alternative designs for national computer networks have been developed. While in most cases permanent computer communications networks have not developed to a practical stage, several models show great promise. Some of the universities which have participated in the design and development of national networks have considered the problems, costs, and benefits available from these arrangements. However, there has been little communication among other universities and colleges concerning the potential benefits or disadvantages to the educational community which will result from the more general use of an ARPA Network run by a civilian agency or from the development of alternative national networks for computing. The EDUCOM Spring 1972 Conference, "Networks for Higher Education," was planned as a forum for discussion of the conditions under which existing or planned national networks could provide significant resources for higher education.

Larry Roberts in the first presentation of the morning, gives a brief description of the ARPA Network, an analysis of some of its characteristics, and a statement of its probable future development. One primary conclusion can be drawn from recent analyses of the network: charges for network use which are made on the basis of information sent, rather than on the basis of traffic distribution or traffic volume, will reflect the cost.

Ruth Davis, in a presentation on the practicalities of network use, points out that the adequacy of network technology is really tested not when the network is developed but when it is used profitably by consumers. Before existing networks will be suitable for general use, standards, documentation, and adequate pricing policies must be developed.

Don Aufenkamp describes the National Science Foundation plan for a trial National Science Network which will link academic computer users to computer and information resources. Some of the aspects of national network use which will be studied during the implementation years of the trial National Science Network are: network management, discipline-oriented centers, resource sharing for special interest groups, mechanisms for financing the network, and the impact of the network on existing academic computer centers.

Philip Enslow discusses the policy concerns of the Office of Telecommunications Policy. The OTP has three general missions: to review government use and management of communications; to provide a focal point within the executive branch for dealing with the Federal Communications

Commission and Congress on telecommunications matters; and to advise the President on national policies for telecommunications.

In the final presentation of the morning, Eric Manning reviews the development of computer communications networks in Canada. The Science Council of Canada has recently proposed a trans-Canada communications network to be completed by 1980. The network would consist of a high capacity digital trunk (the national spine) which would link regional subnetworks. The Trans Canada Telephone System has recently announced a number of related new plans including projected completion of a coast-to-coast hybrid network by 1973. Consortia of Canadian universities are planning a Canadian Universities Network (CANUNET) similar to ARPANET and the Ontario Universities Network (OUN).

In a major address given at the luncheon, Sidney P. Marland emphasizes the need to apply existing technology in the service of the basic human goals of education. He predicts that computer technology will become important, even essential, to the pursuit of learning and will have an impact on the learning process like that which television is now beginning to have.

The first set of discussion groups explores issues related to computer network use in higher education. Henry McDonald's group discusses alternate technologies for networks. He outlines the design characteristics of a network technology which is being developed at the Bell Telephone Laboratories. Steve Crocker's group answers questions about the operation and debugging of the IMP and TIP on the ARPA Network as well as protocol development in support of applications. David Morrisroe's group focuses on management concerns for national and regional networks and the financial impact of network use on individual institutions. Thomas Kurtz's group discusses regional networks as a resource for distributing and trying out materials related to the use of computers in the curriculum focusing especially on project CONDUIT. Peter Lykos' group concentrates on plans for discipline-oriented centers such as the National Computation Center for Quantum Chemistry and the Computer Research Center of the National Bureau for Economic Research. Fred Kilgour's group discusses libraries and information centers paying special attention to the Ohio College Library Center system and its use of Library of Congress MARC tapes. Bill Bossert, discussing hierarchial computing, outlines the problems and prospects for using a mini-computer to provide primary campus computing needs and access through a network to larger machines.

The second set of discussion groups covers a similar range of topics. Edwin Istvan's group concentrates on the potential for cooperation between higher education and government through networks. There are two ways in which government and higher education might cooperate: first, to share data bases or other informational resources; and, second, to work cooperatively on research projects. J.C.R. Licklider's group discusses research applications of currently operational networks, with special attention given to the ability of networks to handle graphical interaction. Carl Hammer's discussion includes presentations by representatives of seven commercial time-sharing services.

The presentations and discussion highlight advantages to the university or college user of accessing a commercial time-sharing service, rather than other university computing resources, through networks. Ben Mittman's group considers what role there might be for campus computer centers after networks have become established as an alternative source of computing resources. The group scrutinizes alternative structures for computing centers which utilize networks. Paul Mielke's group reviews successful attempts to acquire and use computing at smaller colleges. Chuck Mosmann's group reviews examples of instructional computer use, both computer assisted instruction (CAI) and computer managed instruction (CMI). Systems presently in use at the University of Florida and systems being developed at the MITRE Corporation, are cited as illustrations. Harold Wooster's group highlights applications of networks for research and patient records in medicine and health science. Network use for examination, medical studies, intern matching, and third-party payments are illustrated.

The entire Conference sounded a new note on the educational scene. Each speaker and each panel discussion brought out the increasing actual and potential use of computer networks for higher education. Whereas in the past we have said that computers are here to stay, now we can say networks are here to stay. Furthermore, they will be extremely valuable tools in our educational development. Colleges and universities should now consider how they can take part in network activities because of what these networks will offer their students and faculties. It thus now behooves each of us as educators to become acquainted with these new powerful tools and to use them for the advancement of our educational goals.

A great deal of credit for the success of the Conference goes to the speakers and panel members who participated in the Spring Conference. Each contributed substantially to the success of the Conference as a whole. However, I want to especially thank members of the program committee who contributed extra time and thought to selection of a wide range of excellent speakers and panelists.

William Atchison
Program Chairman

Program Committee

D. Don Aufenkamp
National Science Foundation

Martin Greenberger
The Johns Hopkins University

Ruth Davis
National Bureau of Standards

Carl Hammer
UNIVAC

Peter Lykos
National Science Foundation

I

Networks for Higher Education

ARPANET: Current Status, Future Plans

by Lawrence Roberts
Director for Information Processing Techniques
Advance Research Projects Agency

Let me start with a brief description of the ARPA Network and a statement of the current goals and philosophy of the project – which tend to change from time to time as it evolves.

The major goal, of course, was and still is resource sharing. In the very early stages of network thinking, analysis indicated that the only way to achieve this was with packet switching as opposed to circuit switching. I will come back to this later, but at the outset I want to emphasize that the ARPANET is only one form of packet switching in a large domain of possible implementations of packet communications technology. It happens to be a very effective one for the kind of thing that we are doing -- sharing resources between computers – but there are many other applications and effects that packet communications will influence in the future.

A hundred years ago, circuit switching was the only feasible technique. Resources couldn't be allocated dynamically in milliseconds, so they had to be allocated ahead of time. Today, packet switching by computers is probably cheaper than circuit switching. The main difference is that in packet switching you do your resource allocation and your conflict resolution on the fly as the message is going through the network, rather than ahead of time. Some mixture of these strategies would be potentially useful, and as the future develops, we'll probably see some capabilities developing in packet switching systems for handling allocations of longer-term demands as well as instantaneous traffic flow. These could produce more efficient use of networks and computers. But at the moment simple packet switching systems appear dominant, even in the area of satellite communications.

Let me now turn to network organization. The ARPA Network was initiated back in 1969. Looking back on it, and observing the current French and Canadian efforts in network design and construction, I notice how much easier it is today, with the knowledge that has been developed in the past three or four years, than it was for us. Before 1969, we didn't know how effective an IMP would be, whether it could handle the kind of traffic levels that would make it a good traffic manager, or what sort of throughput we could manage to get out of it. We didn't have any idea what the cost of building such a network would be, although we had some guesses. In fact, if

someone had talked about building a national network of some importance at that time, based on a technology which nobody had ever even tried, he would have been laughed down. So I think we have come a long way, not only in our use of the existing net, but simply in the demonstration that this sort of thing is feasible, and that the costs and effects are favorable.

The current situation is complex in every respect. Shortly we are going to stop publishing maps of the networks, lists of the nodes, and similar documentation. Like the telephone system, the computer network is becoming too complex to make a route map useful. A phone book is more to the point.

The hardware of the present network, however, is relatively simple. The original Interface Message Processor, or IMP, was a Honeywell 516. It handled packets from host computers or from other IMP's and routed them to their destinations. Later, we introduced the somewhat cheaper 316 IMP, and a larger version, the Terminal Interface Processor or TIP, which handled interface terminals to the network without the help of a local host computer.

Now perhaps we should return to the basic characteristics of this type of distributed communications system. The Network Analysis Corporation has been doing a lot of analysis of network design; they have studied the topology of the network to determine the effects of various changes in the network, the effect of traffic changes on network costs, and means of simplifying the topology. From this effort we have learned a great deal about networks, particularly how tariffs might be introduced for such a service.

Our analysis indicated that network costs are surprisingly independent of many factors which one would initially assume to influence tariff rates. For example, we did a number of simulations of various traffic characteristics. We looked at users who only wanted to communicate with nearby machines, communications use that fell off rapidly with distance, as well as uniformly distributed communication anywhere in the country, and asked what the effect was on network costs. In other words if, through a tariff or some other means, the distribution of people's choice were skewed in terms of distance, did it affect our costs in providing that service? The answer was, "No, it does not affect it at all." For any kind of traffic distribution in terms of distance, we can design a network equally as good as the ARPA Network design, with a slightly different topology but the same cost. It does not matter to us whether people send their messages across the country or to their neighbors. It does not make sense to introduce a distance-based tariff.

Second, we found that the network is independent of the traffic distribution pattern. That is, if most of the traffic comes from a subset of the nodes, and those were communicating in the main with another subset of nodes, and you introduced very strong constraints on the probabilities of communication between other nodes, the network would still work at the same cost per bit. It has the same throughput capability, within about five percent. This holds even with some nodes transmitting ten times as much traffic as others. Hence it doesn't matter who generates the traffic or where it goes, we only need to look at the total network load and determine what the

cost should be for this total amount of traffic. All we need to do is count bits. Actually, in our case, packets are the best things to count.

Because we only need to count traffic, and it doesn't matter where it's going, we really don't need to ask a new customer whom he is going to talk to. It really doesn't matter. The distributive nature of the network accepts statistical loads in both time and space very well; their distribution doesn't seem to affect it.

The third point is that the network is independent of the peak rate. We have analyses of what would happen if a good percentage of the people in the country wanted to join the ARPANET but didn't care to pay for fifty-kilobit line interconnection. Suppose they only needed a peak rate which could be achieved by 9.6 kilobit lines, an effective rate of 15 kilobits. In a doubly connected network like the ARPANET the effective data rate for long transmissions is about eighty percent of twice the basic line rate. Thus the capacity of a network using fifty kilobit lines is about 80 kilobits, and that of a network with 9.6 kilobit lines is about 15 kilobits. We asked what would happen if half the people on the net decided to use 9.6 kilobits instead of fifty. The result was that, although they got worse service, the cost of the network was the same whether we put in 9.6 kilobit lines for them or fifty kilobit lines for everybody. A substantial number of fifty kilobit lines were needed in any case for the large service centers and other high-bandwidth users. If you have a fifty kilobit line going by a 9.6 kilobit customer you might just as well bring it in to his building rather than run a low-speed alternate line. Analyses made with a random distribution of these factors generally show that there is no variation in cost with varying distributions of peak rate requirements.

The fourth factor is that, within the effective traffic levels, cost is a linear function of traffic volume. Most of you have seen Figure 1 before, but it is useful to make this and my final points. Note that for capacities anywhere from zero to twenty kilobits per node average rate, the cost per node depends linearly on the traffic. This means that you can charge a fixed price per bit regardless of the actual traffic volume.

The fifth point is that network cost is largely independent of the network size beyond about forty nodes. The shaded area extends to about a hundred nodes. We have gone beyond that in analysis, but within that area, it's largely independent of the size of the network, once you have spanned the country and paid for that effectively through twenty to forty nodes.

One primary conclusion can be drawn based on the foregoing analyses. Charging for network use should be purely on a cost-per-packet basis plus a connection charge. There are no other factors we need consider, and that makes life very simple.

Now let me recount briefly where we are in terms of usage. The original network was introduced purely at research installations around the country. Most users were the last people you would expect to use the network, because they had their own computer facility, they were happy with it, they didn't want anything else, and they were mainly doing some sort of computer

ARPA NETWORK COST VS CAPACITY

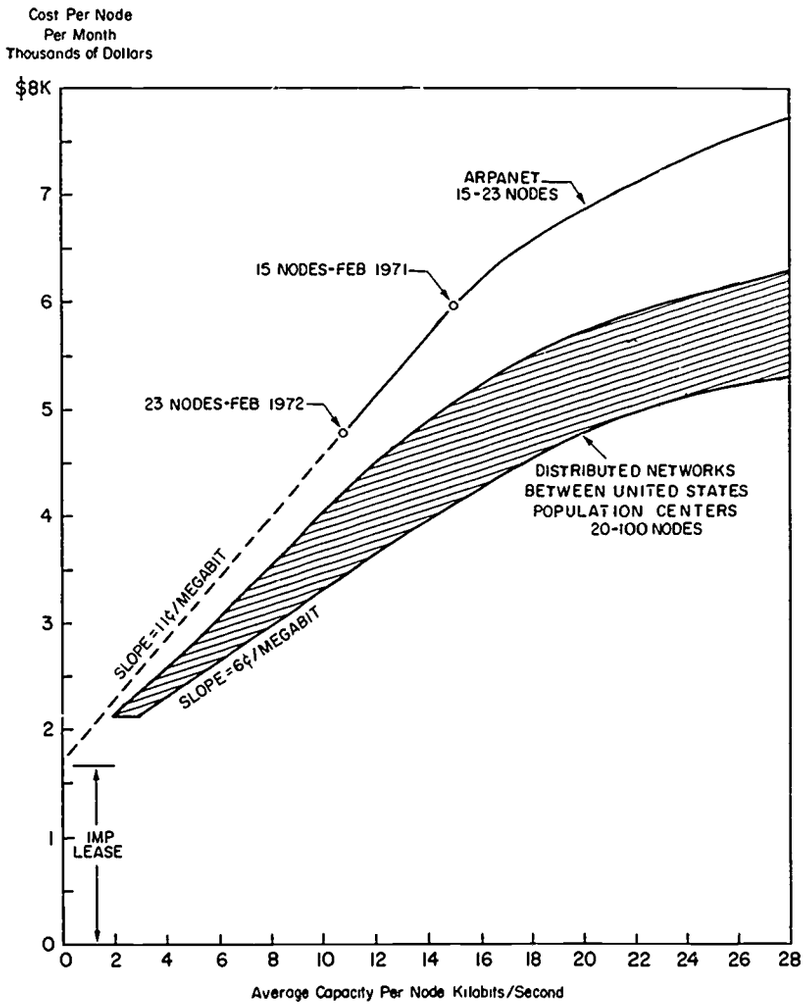

Figure 1

research. These people were necessary in order to build a protocol and develop techniques for intercommunication between computers. They did just that. But they are *not* the people who are going to introduce large volumes of traffic in the net, and they were never intended to be.

The second group of nodes are the ones which are being introduced because they need to use resources somewhere. These nodes, together with some of the earlier ones which can provide resources, are the ones that are adding the traffic. In some cases, these groups have associated themselves with the original computer science groups. For example, the climate research group at Rand has started working with the computer research group and is using the network very effectively to get at UCLA's 360/91. UCLA was on the network because of the computer science group there, but we tied in the 91 to make that service available. There has been a very substantial use of that facility by Rand, and a very effective result in that they didn't have to buy their own machine. Through the network, they could get their work done far more effectively than in any other way. In many cases like this there have been gratuitous incidents of substantial use, but largely the users are just getting on the net and geared up for use. Network traffic has been starting to grow in the past months since about October or November, as the users get on the network. After all, it just started in September of '71. When you add a node in a place, it takes a while for them to add enough terminals to get the full use of it. Nevertheless, we are coming to depend on the network more and more in the daily operation of many of our projects. It's a slow process, but one which is building up traffic in a continuous exponential growth.

When you look at network traffic today, you have to keep these factors in mind. Total network traffic now averages around 675,000 packets per day. Although this is a very large amount of traffic, it's not large compared to what the network can handle. It's probably about seven percent of the network capacity that we could tolerate. However, it is a substantial amount, and we are getting good statistics on the type of usage.

An interesting point that I only recently realized in studying network traffic data was that it is increasingly exponentially. For the last eight months it has been increasing by a factor of ten every twelve months. This means that we will saturate the network's current capacity by late 1973. By then we will have to increase the capacity of the network, which of course is what we had fully intended to do all along. This is absolutely no problem, but we have to be able to predict this nine months ahead of time in order to go on growing.

As you probably know, the network can be expanded indefinitely up to a very much larger traffic level by just adding lines between the IMP's. It is a continuous expansion capability. If you look at individual nodes now, there are five that are really active in the sense of being major users. They are not doing their full computing over the network yet, but they are using on the order of thirty kilopackets per day each, and that rate is increasing continually.

Let's now look at something I'd rather not view, but I thought might be interesting: the cost per bit that customers actually pay for the kind of traffic

levels that they are now using. An IMP amortized over five years costs about $9,000 per year. Then we charge p· ·e $16,500 per year as their share of communications costs. Maintenance is about $5,000 per year. So the total cost is about $30,500 per year. Thus, users I mentioned, with about 30 kilopackets per day traffic, are paying about three dollars or better per kilopacket which is about ten times the figure I have been mentioning: thirty cents per kilopacket. In fact we do expect these users to increase their traffic by a factor of ten, and they certainly can within the expected capabilities of the net.

If you just take that three dollars as a current cost, you find it is very similar to the cost of direct straight line connections. In fact, if you compare it to some other networks that are in existence today, it is ten to a hundred times cheaper than their current operations, but it is nowhere near as cheap as it can be. It can be a factor of ten cheaper than that if the network builds up, as it appears it is going to, in the next year. We're certainly equal to if not better than any other digital communications system, and moreover we're building a capability which is way beyond any other you can think of.

The future research that we are undertaking involves many areas. One is to expand the ARPANET via satellites to Hawaii, Alaska, and other locations with a different kind of network extension which broadcasts packets from the satellite to all nodes. This may prove to be an excellent way to expand the network on an international basis and tie countries together. I don't have time to go into the details but that looks very exciting and we are pursuing that. We are adding Remote Job Entry terminals, we are building a high speed IMP, which is much faster for the T carrier lines, and we are looking at low speed remote host implementations. We are tying in consoles in surrounding areas. We are looking at the area of packet transmission for rac.o terminals because, as I said, in the packet switching domain there is a whole range of communications which has not been covered at all by the network.

The operation of the network is probably going to be turned over to commercial activity – a commercial carrier. We will go on bid in the next few years and ask somebody to take on this operation as a commercial carrier operation. That is the general plan – the specifics haven't been worked out yet.

On the international scene, as I have mentioned, are two things that really should be done. We don't really need to interconnect yet; we have hardly anything to do between countries at this point. But we do need to start working on international protocol agreements, to sit down and at least meet and talk about some of these questions. The inter-IMP protocol can be different for each country as long as we have a way of talking between countries. But the inter-host protocol has to be common for all countries if we aren't going to have a huge reprogramming cost in 1980. I estimate that could be as high as 5 billion dollars if we did it wrong and didn't all do it the same way. In any case, the important thing, as new networks are getting started, is to start talking to each other.

Practicalities of Network Use

by Ruth M. Davis
Director, Center for Computing Sciences and Technology
National Bureau of Standards

The world of computer networks is a world of users and providers of network services. These users and providers may be accompanied by other participants or bystanders in the marketplace for network services. In the next few minutes, I will discuss this marketplace, outlining some of the problems involved in achieving a successful interface between users and providers. You will note my continuing emphasis on services, rather than computer networks as such whether it be their hardware or software or any other technical aspect of this fast developing technical area. It is the set of problems that arise from viewing our technical, managerial, and other problems from a services standpoint that can lead to an understanding of these problems adequate to propose and evaluate solutions to them.

The practical world of networks is especially concerned with what happens to the user in the real network marketplace. The practicalities of network use come home to rest after you look at the ads in the magazine, pick a terminal that was photographed along with a very attractive young lady, put your money on the line and then go back home and find that what you have to live with is the terminal and not the attractive young lady. In many instances, you can't even get a sympathetic response from the other end of the line when you call with questions about network use or when you report difficulties. That is the picture of the present real world of network use.

This world is composed of individual customers, not of countries and not of governments, but of individual customers on one side of the market. It is also composed of sellers and their desires to provide services in the most profitable way. The bridge between customer and seller consists of pricing policies, consumer information, marketplace standards, consumer protection mechanisms, and a competitive market. The supporting network science and technology, meets its real test in this marketplace where it is not the product directly sought by the customer but where instead its adequacy is judged by consumer satisfaction and seller prosperity – or at least seller vitality.

In scrutinizing marketplace practices in networks, we find very little consumer information aimed at an intelligent John Q. Public. Probably the most widely publicized information on networks concerns either their

potential threat to individual privacy, or the problems they pose or encounter to or from the regulated communications industry.

Standards are more essential today than in the days when services and products were simple enough for most of us to form our own value judgments. Today, 80% of us are dependent on products and systems which are man-planned, man-designed, man-made, and man-maintained. Computers and computer networks epitomize a technology whose products and services are too complex for most of us to properly judge. It is at this time, in this day and age, that the very complexity of products, systems, and the marketplace makes it difficult for us to access the value and protect the right of the consumer to a fair deal. Estimates are that there are about 19,000 standards governing the marketplace today. However, in the computer field, there are just 26 national voluntary standards and about the same number of international voluntary standards. About 11 of these standards appear to be applicable to the computer network service area or to the computer service sub-industry as it provides time-shared services. These are X3.1 sychronous signalling rates for data transmission; X3.4, X3.6, X3.14 and X3.22 are related to the ASCII Code for Information Interchange; X3.9 FORTRAN and X3.10 BASIC FORTRAN; X3.15 Code for Information Interchange and Serial-by-Bit Data Transmission, X3.16 Character Structure and Character Parity Sense for Serial-by-Bit Communication in ASCII, X3.24 Signal Quality at the Interface Between Data Processing Terminal Equipment and Sychronous Data Communication Equipment for Serial Data Transmission; and finally, X3.25 Character Structure in Parity Sense for Parallel-by-Bit Data Communication in ASCII.

Whether or not a competitive marketplace will exist for computer services is dependent upon many forces today. Indeed, of the 13 anti-trust suits in existence in the computer industry, 11 of which have been filed against IBM, a number of the complaints voiced concern about undue constraints placed on the sales, the pricing policy, and the services relative to the computer network sub-industry. Consumer protection mechanisms are relatively primitive throughout the computer industry and the computer marketplace. Just recently, there have been a few suits brought against computer companies on the basis of warranty, contractual liability and tort. In some instances, the courts have indeed shown their willingness to subject the novel technologies such as computer technologies to the same kinds of fair trade practices and the same kind of restrictions as are governing and have governed other products and services in the marketplace. This is a growing trend and a healthy trend because it is one of the major means by which consumer protection can be made to exist in the computer marketplace.

Whether or not a proper pricing policy will come to exist in the computer network services or the computer services area is something that we must await in time. We will discuss a little later in this paper the two principle pricing mechanisms now in existence and some of the range of prices that the consumer is now required to select between.

It is an anachronism today to picture the computer industry as being

made up of the seven or eight major mainframe manufacturers who are the progeny of the computer industry of the early 1950's. That industry was characterized as a mainframe or CPU hardware dominated industry, but not today. This dominance neither exists in terms of dollar sales volume nor in terms of the interest or problems facing the customers of the computer industry. Snow White and the Seven Dwarfs equates to a myopic mythology.

An inspection of the computer industry today reveals that it can be considered as being made up of nine major sub-industries, four minor sub-industries and one major supporting industry. These are listed in Figures 1 and 2. These Figures show the number of member companies and the sales volume of the various sub-industries. Even this attempt at clarification is incomplete, for the dollar value of sales of the mainframe manufacturing companies have been estimated to be made up of as much as 35% of software sales. That is, up to 35% of the $4.2 billion sales volume may be due to the software provided with the hardware. We see here that I have listed computer network services and computer time-sharing services as separate sub-industries

THE COMPUTER INDUSTRY: ITS SUB-INDUSTRIES IN 1972

MAJOR SUB-INDUSTRIES

- Mainframe (CPU) Manufacturing
- Peripherals Manufacturing (I/O Devices)
- Mini-computer Manufacturing
- Equipment Leasing (OEM's and Third Party Services)
- Software Products
  - Independent Software Producers
  - Others (Mainframe Manufacturing Companies, Users, Universities)
- Computer Services
  - Regular
  - Time-sharing
  - Library (Computer Programs)
- Facilities Management Services (Computer Resource Management, (CRM's))
- Computer Network Services
- Education and Training Services

MINOR SUB-INDUSTRIES

- Automated Reading Equipment Manufacturing
- Computer Technology (Research)
- Process Control Device Manufacturing (Automatic Control)
- Soft Automation Manufacturing

MAJOR SUPPORTING SUB-INDUSTRY

- Electronic Component Manufacturing

Figure 1

THE COMPUTER INDUSTRY: ITS SUB-INDUSTRIES: MEMBER POPULATION AND DOLLAR VALUE OF SALES; 1970

Sub-Industry	Number of Member Companies	Sales Volume ($Bill)
Mainframe (CPU) Manufacturing	8(1)	4.2
Peripherals Manufacturing	400	1.7
Mini-computer Manufacturing	50-100	0.40
Equipment Leasing Services (Third Party Services and OEM's)		
Software Products		
Independent Software Manufacturing	500	0.2(6)
Mainframe Manufacturing Companies, Users, Universities	25	
Computer Services		
Regular		
Time-sharing	1200-5000(3)	3.0
Library	5(4)	
Facilities Management Services (CRM's)	12(2)	0.2
Computer Network Services	4(5)	
Education and Training Services		
Automatic Reading Equipment Manufacturing	40(7)	0.10
Computer Technology (Research)	20	
Process Control Device Manufacturing		
Soft Automation Manufacturing	5	
Electronic Component Manufacturing	65	0.58

Figure 2

and a component of another sub-industry. The services listed under computer network services include the ARPA NET, AUTODEN, SADIE, all of which are non-commercial and then the two commercial networks which are being or will soon be offered by MCI and Datran. Because of the non-commercial nature of the three networks, the dollar volume of sales has not yet been estimated for computer network services. At the same time, they have been included because any of these non-commercial networks could one day become commercially available and certainly they are in some respects competitive with commercially available computer services of other types.

These various sub-industries all interact with the customers of computer products and services in a rather complex marketplace (see Figure 3). The customers, or consumers, of these products and services frequently must depend on several sources of supply to satisfy even straightforward requirements. Even when the customer requires just one source, the variety of

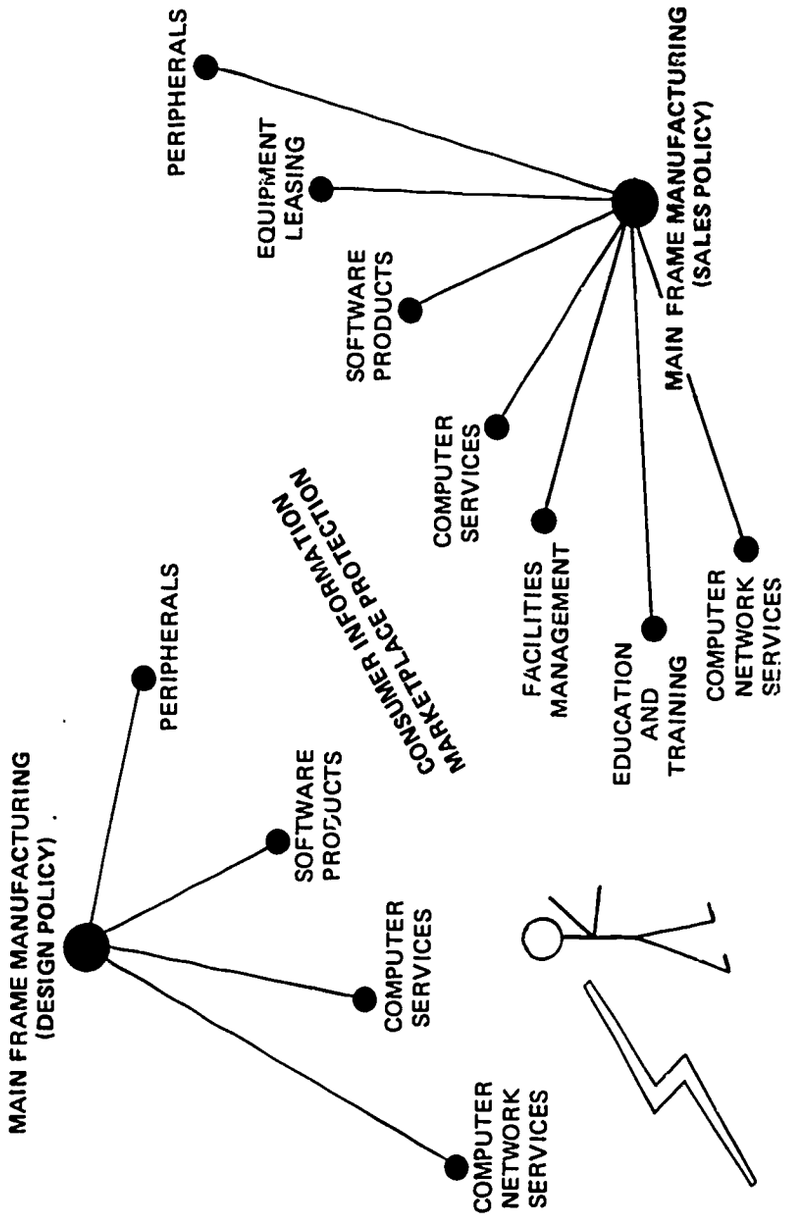
MAIN FRAME MANUFACTURING
(DESIGN POLICY)
PERIPHERALS
SOFTWARE
PRODUCTS
COMPUTER
SERVICES
COMPUTER
NETWORK
SERVICES
CONSUMER INFORMATION
MARKETPLACE PROTECTION
MAIN FRAME MANUFACTURING
(SALES POLICY)
PERIPHERALS
EQUIPMENT
LEASING
SOFTWARE
PRODUCTS
COMPUTER
SERVICES
FACILITIES
MANAGEMENT
EDUCATION
AND
TRAINING
COMPUTER
NETWORK
SERVICES

Figure 3

types of supplies can make selection difficult. There is a growing need at this time for better consumer information and for some degree of marketplace protection to assure that both consumer and supplier alike can interact in an orderly and intelligent manner.

Let us now examine the marketplace for computer network services (see Figure 4). First, there are the providers of these services who are concerned with both providing computer resources and providing for conveyance of these resources to their end users or for assuring that this conveyance is provided conveniently and adequately to permit their computer resources to be fully utilized. There are the users of network services. These include both individuals who access such services utilizing various types of remote access terminals as well as the user organizations to which the individual users belong. In some cases network participants may be both providers and users of resources, as is potentially the case in a network such as the ARPA Network. There are also indirect users, those who are affected on a frequent basis by the use of network services, but who have not made a conscious choice to use them. Finally, there are the observers of the marketplace who are concerned with its orderly behavior and with the protection of the interests of all user and provider participants.

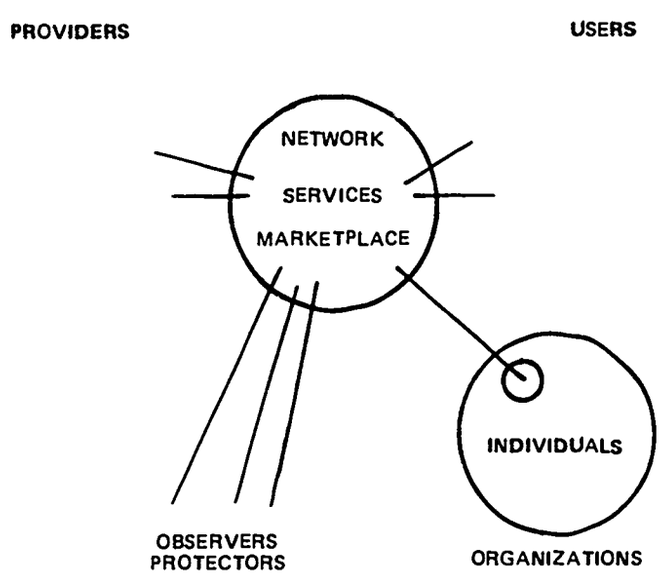

Figure 4

There are numerous examples of these various participants in the network services marketplace (see Figure 5). For example, there are in the United States at least seventy-two commercial providers of time-sharing and/or remote batch computer networking service. In any given local marketplace where these service providers meet large numbers of customers in a competitive manner, a substantial percentage of them may be present. For instance, in the Washington area at least thirty-three of these service provider organizations are represented. The customers of these services, usually accessing them on a toll-free basis through the direct-dial telephone network, are a variety of individuals representing organizations both in the public and private sector. Many times the competition that occurs in the network service marketplace is not just among the providers of this type of service but between these providers and in-house computational services at the potential user organizations.

COMMERCIAL NETWORK SERVICES

INTERACTIVE	19+
REMOTE BATCH	3+
BOTH INTERACTIVE AND REMOTE BATCH	50+
	72+

Figure 5

It is as an observer and in the interest of protecting fair and orderly market activity that I now identify some of the problems which have become evident.

The first problem, but not necessarily the most important or crucial problem, is that of terminology. What is a computer network? What is a computer network service? I have observed from time to time discussions of computer networking in which the participants who gathered together seemingly for the same purpose had different things in mind. The relatively simple centralized time-sharing system (see Figure 6), with geographically distributed users connected to the central computer, is one type of network. Another type of network is that represented by the very significant ARPA Network (see Figure 7), in which both the provider and user nodes of the

network are geographically distributed. In between the totally centralized and the very distributed configurations one can conjure up hybrids such as regional network configurations. It is then necessary to imbed on this spectrum of configurations, ranging from centralized to distributed, an additional dimension that is most closely related to the centralized approach (see Figure 8). This is the dimension of hierarchical computing, which for a variety of reasons is gaining in importance at this point in time, and about which I shall speak later in my talk.

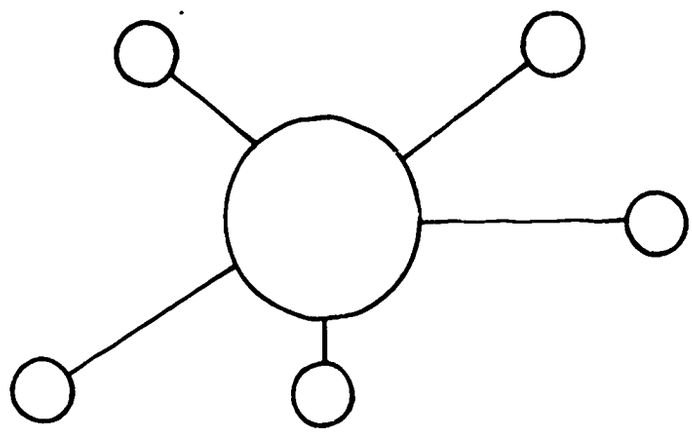

CENTRALIZED NETWORK

Figure 6

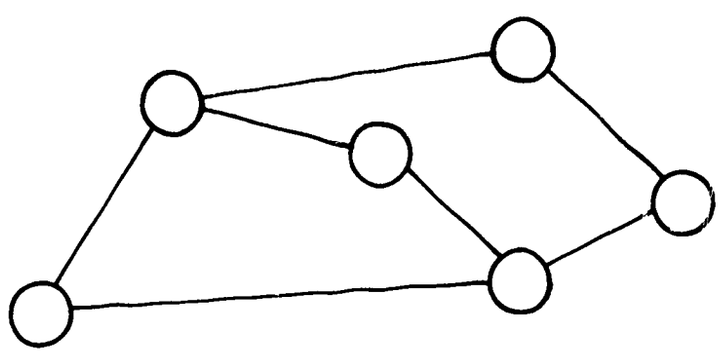

DISTRIBUTED NETWORK

Figure 7

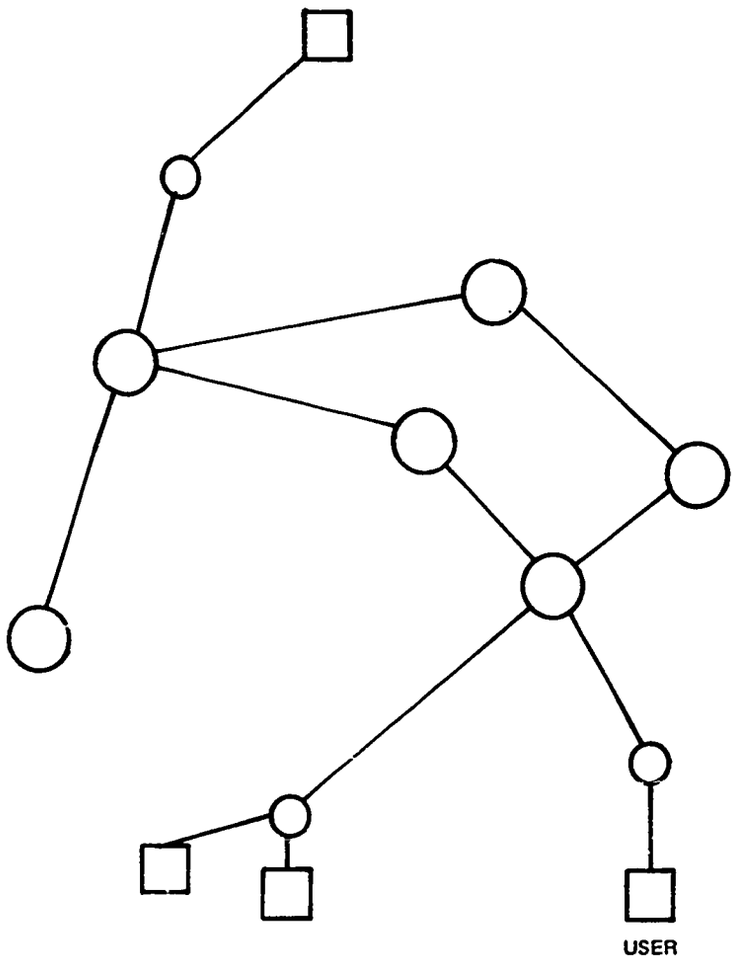

Figure 8

If we can call all of these configurations and variations thereof "computer networks" then it is no wonder that even those of us that are totally emersed in the computer field can be somewhat confused at times when talking to each other about technical, managerial, and philosophical points concerned with computer networks and especially with comparisons of the performance and costs of network services It is necessary to examine this world of services somewhat independently from the means to provide these services. One can then examine this maze of network configurations in an intelligent manner by comparing the ability of each configuration to satisfy the service demands or requirements of a set of users.

What should be the objects of user concern in defining the network services he requires and in examining the interface between himself as a user and alternative service providers? (See Figure 9.) The user must be concerned with the performance of the service, to determine in every way possible whether a service will be adequate to satisfy his requirements. Examples of such requirements expressed in systems parameters include programming or application languages provided, amount of storage available, and measures of response time.

USER CONCERNS

- PERFORMANCE
- COST
- EFFORT REQUIRED

Figure 9

The user, of course, is also concerned with the cost of the services, and I will give attention to some of the pitfalls that can face a user in estimating these costs in just a moment. The user must also be concerned with estimating the effort required on his part to make initial administrative arrangements to learn, and to use network services. This effort may go far beyond obtaining a terminal, communication facilities, and instruction manuals for a given service. For instance, for a potential participant in a distributed network there may be hidden efforts and hidden costs involved in connecting to such a network. Special interfacing hardware and software may have to be developed. Programs developed for this purpose must occupy space in core, and, when executed, they utilize CPU time which must be accounted for. There may be administrative effort or costs associated with maintaining interfaces to remote computer networks.

The main problem facing the user with respect to determining or estimating the performance, cost, and indirect effort or cost is the almost total lack of meaningful quantitative parameters on which to base his decisions. This lack of measurement guidelines, including criteria, techniques and tools, makes it very difficult for a potential user to estimate the value received for resources expended in utilizing alternative network services.

Another problem facing the prospective user is that the computer networking field is moving so rapidly that it is difficult to fairly evaluate the

options. Frequently, comparative data is not current. Even if the data is current, it is difficult to project both costs and performance even in the near future.

The problem of network user documentation and user assistance in general is of importance. The difficulties encountered in providing user assistance are compounded in a network environment, where the users may be far distant from user consultant and reference documents. Present network service documentation runs the gamut from very sparse, but sometimes quite adequate for simple, easy to use systems, to voluminous. If a user must refer to a dozen different documents that are not well coordinated and at the same time suffers a lack of sympathetic "user consultant" service, his life may be perilous. This case of difficulty is even worse when a user is a customer of several different network services, each having separate and very much different documentation.

Such use of multiple network services is not at all unusual and may be desirable or essential for many customers. The problems facing the multiple service user are just beginning when he attempts to log in to the somewhat different services (see Figure 10). In these examples one can see the range in

TYPICAL INTERACTIVE SCIENTIFIC	USE OF SRI THROUGH A TIP ON ARPA NETWORK
HELLO – Z607	E
13 APRIL 72	HELLO
SUPER DUPER BASIC	@ HOST 2
SUPER RESPONSE, INC.	@ LOGIN
SOMEWHERE, USA	T OPEN
	R OPEN
READY	
	ARC TENIX 1. 26.0.05 13 APR 72 ARC EXEC. 1. 32.01
	@ LOGIN
	(USER) NBS-TIP
	(PASSWORD)
	* * * * * * *
	ACCOUNT # 0
	JOB 16 ON TTY 103 13 APR 72 10:15:21

Figure 10

styles and complexity of log in procedures that must be overcome by the prospective user. For log in and a variety of other functions there is a need for standards at the interface between users and networks to facilitate multiple network use. The present gross lack of compatibility leads to frustration and considerable effort and expense and usually serves to benefit no one.

The question of determining costs is usually one of comparing price structures accompanied by reasonable usage estimates. The price structure for a network service is simply a means for allocating the various costs associated with providing that service among its users. The price structure may not reflect the costs for the particular set of remote resources which a specific user may desire. This picture is complicated when one considers the difficult problems facing the service provider in fairly allocating the overhead costs, both managerial and system, associated with operating a network service.

There are two basic pricing mechanisms for network services. The first is the simplest (see Figure 11). This is the block scheduling or flat fee basis, in which the user obtains an entire system or network for his exclusive use for a period of time. In this case, the user must be very concerned about the total user environment of a given network and, in fact, may have to be concerned with the details of how network service is provided in addition to the services themselves.

PRICE STRUCTURES

- BLOCK SCHEDULING
- METERED

Figure 11

The second general pricing mechanism is that based on metering. Typically, use of computer access ports and communication facilities may be metered on a connect or holding time basis, while CPU time may be charged for as used plus an add on for a share of system overhead. Additional charges for disk storage, sometimes core when used, and even input/output utilizing the facilities already paid for in part on a connect time basis may be added.

Furthermore, there is considerable variation in pricing among networks which use metered pricing (see Figure 12). Interactive network use charges translated into a single measure of connect-hour charges range from about $5

per hour to over $50 per hour. Terminal and modem rental are additional costs.

TYPICAL NETWORK USE COSTS

INTERACTIVE TERMINAL CONNECTED TO NETWORK	$5 – 50/CONNECT-HOUR NETWORK USE $75 – 300/MONTH TERMINAL RENTAL
HOST COMPUTER CONNECTED TO GENERAL RESOURCE-SHARING NETWORK	$40K INITIATION OF CONNECTION TO NET (316 IMP) $10-15K COMPUTER–IMP HAROWARE INTERFACE $15-40+K COMPUTER–IMP SOFTWARE INTERFACE $5K/YR. IMP MAINTENANCE $16.5K/YR. + $.30/MEGABIT IN EXCESS OF 4.5 MEGABIT/MONTH COMMUNICATION CHARGE

Figure 12

Use of a general-purpose resource sharing network such as the ARPA Network can involve a very different price structure, as shown here. Note that, in addition to the basic entrance hardware and software costs, there is a 30¢ per megabit charge for data transmitted. This charging scheme is a very interesting attempt to allocate costs according to actual useful services provided.

There are a number of problems facing the prospective user of network services in evaluating and comparing metered network services, even when the price structures of competing network services are clearly understood. The metering for services provided may be a function of how heavily a network service provider is loaded by a collection of users at any given point in time. This may lead to increased connect times during periods of heavy loading, thus increasing the user costs for the same or lesser service provided. When pricing policies differ among competing sources, even benchmarks may be of limited value, since typical remote network service usage varies considerably even for one user, much less a set of users within a user organization.

Now, after talking about some of the more difficult problems that may face the user and may affect the provider of network services, let us examine a few pitfalls which can easily befall either the prospective user or planner of computer networks (see Figure 13). The first such pitfall is that the user or

POTENTIAL PITFALLS

- TOO CONCERNED WITH DETAIL
- OPERATIONAL FEASIBILITY VS. PRACTICALITY

Figure 15

planner may be too concerned with detail. He may get carried away with the "trappings," trying to understand the innerworkings of a computer system or communication network, when he should really be expending his effort examining the external performance and cost of the service provided. The engineering approach of considering a system as a black box and probing its interface with the outside world is appropriate in this case. Unfortunately, from time to time it is impossible to totally exclude consideration of detailed systems configurations. This is especially so when a prospective user or planner must build his confidence in proposed configurations by getting a good feel for how they would behave under varying conditions.

The second major pitfall is to confuse technical or operational feasibility with operation practicality. Sooner or later even developmental efforts must show value received for resources expended. They must be subject to a marketplace action in which at least informal measures of performance must be coupled with cost analyses.

Planning for computer network services must include economic viability studies. Comparison of alternative networking technologies and of alternative networking services must include realistic estimates of costs reasonable pricing alternatives, and the best possible estimates of potential lemand for services, all coupled to show the short- and long-term cash flow indicative of economic viability.

We cannot be carried away simply because a technology or network is new. A new technology or a new type of service may not necessarily be better when all of these factors are considered together. New network technologies and network services cannot be evaluated in isolation. They must be evaluated when coupled with their user communities and alternative providers of adequate networking services. They must also be evaluated with respect to general trends in the field, especially relevant technological and economic trends. One such trend that must be taken into account at the present time in the design of networks is that of hierarchical configurations. The techno-economic factors that have brought about a situation in which about

one-third of all United States computers are mini-computers lead to a conclusion that, in many cases, local rather than remotely accessed computer service may provide adequate service at a minimum cost. One must be careful, of course, to consider the administrative costs associated with operating a mini or small computer facility relative to totally using a larger one elsewhere. It is difficult to justify the stand-alone use of a mini or small computer when one must access unique resources, whether they be hardware or software or a data base located elsewhere, or when communication functions must play a part in the desired network service.

Nonetheless, the user must now be concerned not just with procuring terminals and modems, and communication circuits to attach these modems to remote network services, but he must now be concerned at least with mini-computers. These minis may be an integral part of an intelligent terminal or they may be an important part of a hierarchical configuration that supports laboratory computer service requirements, with real-time interactions supported locally and heavy computational support provided remotely. More sophisticated users of hierarchical configurations, in which larger computers are located locally or at intermediate points, must be concerned with problems of intercommunication protocols and a host of other problems.

There are interesting philosophical as well as technical and economic factors introduced when one examines closely this trend toward hierarchical computing. Mini-computers have the potential to support a decentralized configuration in which the individual can receive control over his own computer facilities, control over his own programming, and control really over his own education, his use of manipulative and scientific skills.

The utilization of mini-computers as a means of returning control to individuals is dramatically evident in education, where our democratic heritage implies local control of education. Ralph Gerard, Dean of Graduate Studies, University of California at Irvine points out:

"Actually, mass development of technologies of communications and, so, of education have led to the loosening of control of men's minds. Printing and books . . . are credited with the successful revolt of the people from tight clerical rule. The typewriters and telephone, possible only with massive conformity, have enormously increased the flow of individualized messages with, especially, no constraint on their content. When the great computer systems and data banks and networks are in operation, there should be greater freedom of local content choice and even production that is presently the case with packaged books or tapes or movies."

It is not surprising then that computer technology as an augmentation of man's intellect and communications technology as an extension of man's means for interaction with society now seem to be the best means for coupling man with society and his environment. These are the technologies which allow decentralization of controls on resources, more geographical independence of individuals and institutions, more individualization of learning, a removal of geographical constraints on the quality of services, and

hopefully a lessening of economic burdens on all institutions.

In my opinion, the greatest challenges we have in the world of networks are: (1) to make network use practical; (2) to remember that people are the users of networks, not countries and not governments; (3) to look at networks and the components of those networks that we have had available for years and to build in consumer protection mechanisms wherever possible.

Computer networks provide a unique means for sharing expensive computer resources. It is by studying the kinds of problems that I have referred to from the viewpoint of network services that we can deal most clearly with the effective use of computer networks, which represent the most radical change in computer utilization that we have seen in the last decade.

National Science (Computer) Network

by D. D. Aufenkamp
Office of Computing Activities
National Science Foundation

RATIONALE FOR NATIONAL SCIENCE NETWORK

A National Science (Computer) Network (NSN) linking users at academic and other institutions to specialized resources for computing and science information services would have profound implications for resource sharing in research and education. Facilities and resources of higher quality than might otherwise be the case could be available, and the need for duplication of some facilities would be reduced with resulting economies and increased effectiveness of use. In particular, such a network of resources would offer the possibility of integrating computing and science information services in ways which could provide a new dimension to efforts to strengthen the Nation's science and education programs.

One of the arguments for the National Science Network is that specialized regional and national centers would be available which would meet the needs of particular groups of disciplines or types of computing. This argument is based, in part, on economic considerations of the so called "economy of scale" and, in part, on the "sympathetic" computing environment for researchers in disciplines supported by a center devoted to those disciplines alone. Some quantum chemists believe that the time is coming when contributions to that discipline may be made as readily through the use of well-designed computational systems as through access to a laboratory. Such an approach would require the talents of both computer scientists and quantum chemists and the availability of a computer among the most powerful of those extant.

In the science information field, the mounting economic and functional pressures now confronting that field make resource sharing through network operations not only an opportunity for vastly improved scientific communications, but a critical necessity for the availability and progress of the information-transfer community. The volume of material to be handled in our present information systems is doubling every seven to ten years. Both input and output activities – primary publications on the one hand and traditional library systems on the other – face economic and operational crises. Duplicative processing, storage, and dissemination operations abound, despite a wealth of good intentions to the contrary. Even greater pressures are being generated through the accumulation of, and demands for, masses of

quantitative data for which, in many cases, processing systems still must be developed.

Academic computing usage also continues to increase sharply. According to a recent survey by the Southern Regional Education Board, nearly 1,700 of 2,800 institutions of higher education provide computing services to the campus either through local facilities or access to off-campus services. Eighty percent of all undergraduates are currently enrolled at institutions with access to computing. Expenditures for academic computing were $472,000,000 in fiscal year 1970 and were estimated at $550,000,000 in fiscal year 1971. It must be recognized at the outset, however, that considerations of computing support are complex whether for an individual researcher or for an institution and often extend beyond basic economic concerns. Nevertheless, the National Science Network might become an alternative to the current practice of maintaining largely self-sufficient campus computing centers.

FOUNDATION ACTIVITIES TO DATE

For several years, the National Science Foundation has been developing the base for the National Science Network, a network which would provide its users with access on a nation-wide basis to computing facilities, science information services and other computer-based resources. Research, development projects and special studies in connection with network technology, research facilities, user services, and resource sharing are already established National Science Foundation interests.

Under the Institutional Computing Services (ICS) Program, which had a lifetime spanning the 1960's, the Foundation supported not only the development of individual campus computing facilities but also facilities to be shared among institutions. The Triangle Universities Computation Center in North Carolina is one notable example. The Regional Cooperative Computing Activities Program is providing additional understanding of some of the problems of developing and sharing computer resources for educational use. The first grant was made just four years ago. To date about 30 regional computing projects involving approximately 300 institutions of higher education, i.e., over 10% of the total in the United States, have received support under this program.

The Foundation and other agencies have supported many projects in which there are special computing facilities or computer-based resources which have nation-wide applicability. NSF supported projects include the National Center for Atmospheric Research, the Computer Research Center for Economics and Management Science of the National Bureau of Economic Research, the Chemical Abstracts Service, the recently established Census Laboratory and Clearinghouse at DUALabs, the Inter-University Consortium for Political Research, and the Quantum Chemistry Program Exchange to name but a few.

Research in computer communications is also supported by the Foundation and other agencies as well as by the private sector. In fact,

computer communications networks already exist that are or could be nation-wide in scope. The ARPA Network is well known to this audience. The Tymshare TYMNET is an operating commercial computing service network developed with private support which incorporates some 20 medium-scale computers serviced by 80 small computers in its communications network. And the MERIT Network linking the centers at the University of Michigan, Michigan State, and Wayne State is an example of a recent Foundation supported network project.

FOUNDATION INITIATIVE: TRIAL NATIONAL SCIENCE (COMPUTER) NETWORK

The problems of utilizing a national network of computer-based resources for research and education are related not only to the technology of computer communications and to services available remotely based on this technology but are related very much to organizational, political and economic considerations. Issues include questions of network management, specialized resources and services, user groups, network financing, impact on campus centers as well as the overall need and desirability.

In order to strengthen efforts to develop the full resource sharing potential of a national network, the Foundation proposes the establishment of a trial National Science Network (NSN) for the major user functions of research computing, science information services, and educational computing as a vehicle for addressing feasibility and other related issues.

The proposal in brief is this: The trial National Science Network will be implemented on the basis of current computer communications technology and augmentation of selected computer-based resources for effective network utilization. A comprehensive and interrelated set of project activities will be selected for the trial network to permit exploration and evaluation of the many dimensions and facets of a nation-wide network of computing and science information resources. The three user functions called out for the trial network have as their common rationale the sharing of resources that is essential to strengthening United States science and education. Each of the three brings special characteristics, special requirements and special contributions to the combination.

ISSUES AND CONSIDERATIONS

Before describing the proposed network activities in more detail it would be helpful to set forth some of the related issues and other considerations.

One of the considerations that arises is that of network management. This function cannot be overemphasized in achieving a viable and effective service. Network participants, whether they be providing resources or be users of resources, must be in agreement on conventions and protocols. What should be the obligation and responsibilities associated with network management? What obligations should the network have toward institutions

and individual users, and conversely? What organizational structures would be appropriate? What substructures would be desirable? What kind of policy and advisory bodies would be needed to cope with problems of sharing risks and liabilities? What bodies would be needed in connection with the evolution of the network? What balance might be achieved between local and network staff to make the most effective use of the combination of campus and network facilities? All of these questions merit careful study.

The build-up of special discipline facilities is an issue that is in various stages of consideration by several disciplines in context with the future needs of that discipline. Foundation supported studies underway in two areas, for example, concern the feasibility of a national center for theoretical chemistry and the exploration of the concept of a national center or network for computational research on language. Specialized national centers could work to a great advantage for some users and institutions, could work to a disadvantage for others, and could have little impact on still others. The timing of the establishment, the disciplines concerned, the services offered, and the conditions, means, and costs of access would be obvious factors.

This brings us to the consideration of special interest groups for more effective communication and sharing of network resources. The principal uses envisioned, namely, research computing, science information services, and educational computing, offers one natural structuring.

Requirements for future networks is also an important consideration. Although current technology is the basis for the trial National Science Network, the development of user requirements for the "real" networks of the future will have to be a continuing underlying effort.

Network financing is yet another issue. In the long-term a computer network of resources and services should be self-sustaining in that users of the network should bear the costs. Here, again, network management is a key element.

The impact of the National Science Network on academic computing centers is an issue which arises immediately. The trial network is designed to address this issue directly. The network will offer new options for individuals and institutions in meeting needs for computing and computer-based resources, and one thrust of the trial network will be to explore the extent to which it could satisfy individual campus needs for computing and science information services. If the National Science Network is to become a meaningful extension or alternative to the usual campus computing facility, then careful planning must precede any superimposing of the network on the existing structure of campus centers. The greatest benefit perhaps might be that the recent period of rapidly expanding campus centers could be replaced by a period of more orderly growth and refinement as researchers and institutions would be able to look more readily beyond their own campuses to meet special or even continuing needs.

FOUNDATION SUPPORT FOR NETWORK PROJECTS

The Foundation welcomes proposals, general inquiries and expressions of interest in connection with the National Science Network. Proposals may be submitted for support of research, exploratory, and development projects bearing on the network. Special attention is being given to collaborative efforts independent of institutional affiliation for development of innovative and effective approaches to resource sharing. It is recognized that planning for some network project activities, such as collaborative resource sharing, requires substantial effort in itself and support will be considered for appropriate planning efforts.

In order to maximize the potential of the limited funds anticipated during the initial phase of this effort, the early stages will be concerned primarily with concept definitions and the derivation of guidelines. A series of discussions and concise letter proposals is suggested which will permit the Foundation to gauge the community's sense of direction, interests, and requirements. Prior to submitting a formal proposal to the Foundation, applicants should submit a preliminary proposal which will be reviewed for its appropriateness to the trial network.

While it is difficult to set forth in this address the full range and extent of projects that might be considered for Foundation support, the issues which were cited are suggestive of the scope of the network initiative. In addition to these broadly based concerns, project activities will be developed around the network user functions. It is expected that guidelines will be issued which will provide suggestions for the preparation of proposals.

With reference to research computing, for instance, several areas are of interest. General purpose computing is one network application. Disciplinary resources have already been mentioned. Hierarchical computing techniques in which computer-based automated laboratories have network access is another research activity in which there is concentration. The Foundation has already funded projects directed specifically at developing advanced network computing techniques applicable to hierarchical computing.

Another area cited is that of software testing and distribution. One project underway with Foundation support is a study on approaches to the testing and distribution of computer programs for research, a study which is examining the possible roles of academic institutions, the National Laboratories, the National Bureau of Standards, and the private sector. It is expected that the National Science Network will facilitate the transfer of program packages from center to center and at the same time lessen the need for doing so.

PROGRAM MANAGEMENT

The Office of Computing Activities and the Office of Science Information Service are cooperating in mounting the trial National Science Network. Network applications, however, extend beyond the program

interests of these offices to other Foundation programs in which the National Science Network could strengthen program activities. For example, a large-scale project addressing a national problem might utilize the network to facilitate dissemination and use of scientific data produced under the project. The Office of Computing Activities is providing the overall coordination within the Foundation.

Close coordination is also maintained with other government agencies in developing the trial network. The Center for Computer Science and Technology of the National Bureau of Standards is already assisting the Foundation in planning activities. Of the projects underway at the Bureau, one is the development of a set of terminology adequate to support communication among network planners, designers, implementers, and users. It is essential that participants in the project be "speaking" the same language. A particularly important effort of the National Bureau of Standards is the investigation of alternative network technologies applicable to the trial network. The Bureau will maintain a continuing liaison with the other NSF-sponsored network efforts and proposed projects in order to formulate the implementation requirements.

PROPOSED SCHEDULE

It is risky, perhaps, to announce a schedule. We do so with the express understanding that it is a target based on project considerations. The degree to which the trial network will materialize as depicted depends on the extent of (1) funding available in fiscal year 1973 and beyond, and (2) experience during the planning phase of the activity. It is proposed that the planning and structuring of the project activities associated with the trial network continue through fiscal year 1973. Implementation would begin in fiscal year 1974. And, it is proposed that the trial network be in an operational status for approximately three years starting with fiscal year 1975.

SPECIAL STUDIES

Special studies and evaluations will be conducted concurrently with planning, implementation and operation of the network. One study of special interest which is just getting underway at the Denver Research Institute is concerned with alternative approaches to the management and financing of university computing centers. The purpose of the study is to determine how to optimize, insofar as possible, computing capabilities and operations on individual college and university campuses, and to identify conflicts between this optimization and established university goals, policies, and operations. Case studies will be developed in depth for selected alternatives reflecting experiences of particular institutions in responding to specific problem areas, and in the effects and consequences of such actions in the institutions. Conclusions should be applicable to most four-year institutions of higher

learning and should assist college and university administrations in dealing with the complex and growing problems of computing on campus.

SUMMARY

In summary this National Science Foundation thrust is aimed at a broadly considered solution on a national level. It is intended to provide the framework for an eventual National Science Network which will permit institutions from every sector of our society to participate at minimum cost and without Federal subvention.

Mini-Tutorial On Telecommunications Management and Policy

by Philip H. Enslow Jr.
Senior Staff Assistant
Office of Telecommunications Policy
Executive Office of the President

INTRODUCTION

Good morning ladies and gentlemen. I certainly appreciate the opportunity to be here this morning and talk to you briefly about the management and policy aspects of NETWORKS FOR HIGHER EDUCATION. I think that your program committee has selected an excellent series of topics for this morning's session.

As the people actually involved with the decisions on what to do about the use of networks in your education work, you have to consider the entire picture – the technical aspects of what is available such as the ARPANET described by Larry Roberts, the hardnosed facts about the practical use of networks so ably discussed by Ruth Davis, and the plans of the NSF covered by Don Aufenkamp; and you must also give full consideration to the management, policy, and regulatory implications since these will undoubtedly govern just what is made available.

And then to top off the morning session, Eric Manning will tell you what is happening north of the border in Canada, where they can look at our experience in this area to save themselves much of the "learning curve of data communications."

I am sure that many of you who have been following the progress in this field closely have specific questions to ask about our policies for data communications; however, in every discussion with a group such as this I find that many are not exactly sure as to who the players are and what their roles are. Therefore, I would like to use my prepared presentation to cover this important point. I will then briefly describe some of the work that we are now doing in the area of data communications and networks, and hopefully leave enough time for you to ask your specific questions.

OTP: HISTORY AND FUNCTIONS

The Office of Telecommunications Policy was created by an Executive Order signed by President Nixon in September of 1970. It is one of the major

offices in the Executive Office of the President. The present authorized size for OTP is 65 professionals and support staff making it the third largest of these offices. OTP has three general missions. The first of these is the one that is most commonly thought of – the intraspective review of the Government's own use of communications and its management of communications resources. This is an on-going process that is implemented by establishing policy guidance for the Executive Branch of the government and by advising the Office of Management and Budget on the communications budgets for the Executive Branch agencies. The second primary mission is to provide a single focal point and voice within the Executive Branch for dealing with the Federal Communications Commission and the Congress on telecommunications matters. Finally, and certainly of most interest to those of you here today, is our role as the President's principal advisor on national policies for telecommunications. In executing this last mission we attempt to focus our attention on long-range policy goals and objectives, although it is certainly impossible to detach ourselves completely from current problems.

PERSPECTIVE FOR THE NEED FOR POLICY

There may be some questions in your minds as to why we need national policies in this area. It is basically a matter of priorities in the application of national resources.

The functions of computer and data communications are considered within the context of our overall review of common carriers. The common carrier industry has important resource constraints that highlight the need for national policy when one considers all the uses to be made of the systems. The carriers place an enormous demand on the investment capital resources of this country. AT&T alone is investing approximately $8.4 billion in construction in 1972. The total construction budget for 1972, adding in the independent telephone companies, is $10.5 billion. A small amount of this funding is generated internally; however, the requirements of the telephone companies for external financing are approximately 20% of the total needs of all United States industry for construction financing. There is no reason to expect these figures to decrease, in fact, the ever expanding uses being made of the communications services in our life will cause the gross number to increase greatly, while the percentage for external financing will probably advance slightly. The need for a set of coherent policies in an industrial segment that consumes so much capital is obvious without even considering other resource constraints such as the technical problem of limited frequencies being available for those portions of the systems that require microwave transmission to be economically viable.

OTP AND THE FCC

Telecommunications Policy may be made in several ways. In the past, the only government agency active in this area was the Federal Communications

Commission, and an extremely common and germane question is "What is the relationship between the FCC and the OTP?" This rather busy chart lays out all the relationships in Telecommunications Policy.

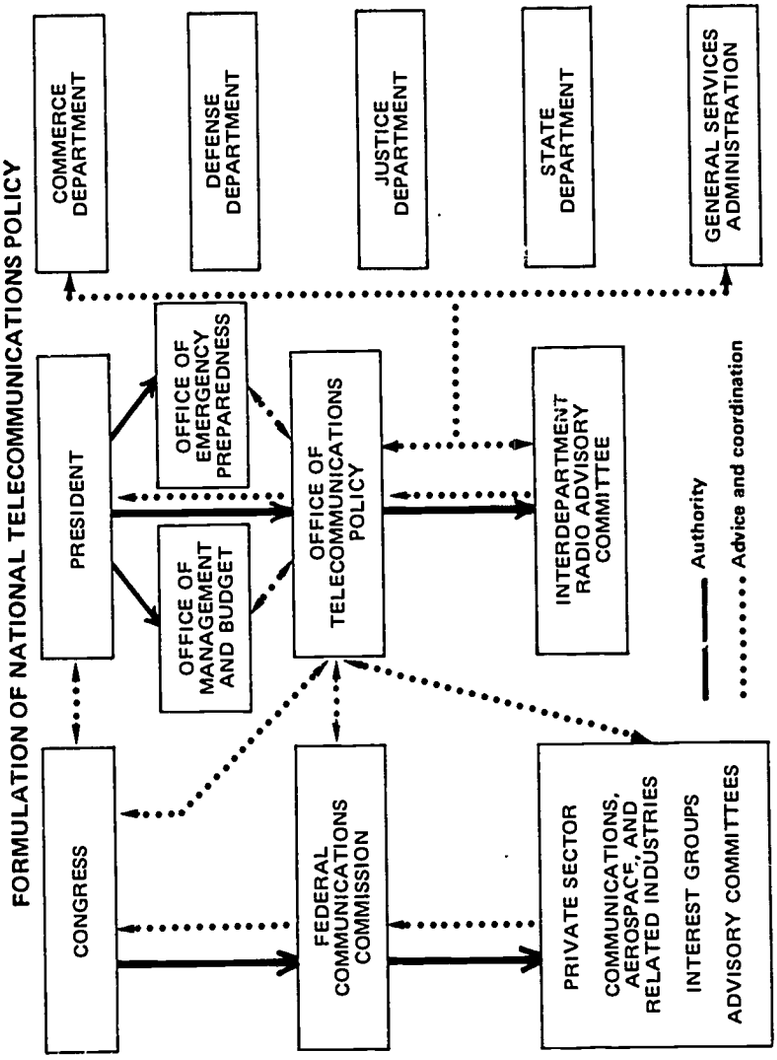

The FCC is an agent of the Congress assigned the mission of executing certain functions prescribed in the Communications Act of 1934 and the Satellite Act of 1962. These are primarily the control of frequencies for non-Government users, the licensing of broadcast stations, and the regulation of the communications common carriers. To quote from a speech by Chairman Burch: "We try to be arbiters, defining and redefining the rule book with all possible precision." It may be of interest for you to know that the report on regulatory agencies within the Federal Government, known as the Ash Report, recommended that all of the Federal regulatory commissions such as the Interstate Commerce Commission, Federal Trade Commission, etc , be replaced except for the FCC. It did recommend that the number of FCC commissioners be reduced from seven to five for more efficient operation.

HOW IS POLICY MADE

The basic technique that we utilize is policy or systems analysis. The primary characteristic of this procedure is an interdisciplinary study of the entire problem with attention being given to the economic, legal, and sociological implications as well as the purely technical performance characteristics. Often our work ends in a blind alley; however, we try to stop those projects before they go too far. We prefer to concentrate on those that appear that they will result in enough substantive information to determine the best policy option.

We may express a national policy goal or objective as the Executive Branch's input to the Commission on a matter that they have under study or as a request that they initiate action to implement a new policy by a change in their rules and regulations. Another method that can be employed is legislation proposed by the Administration to the Congress. This method is particulary important when the subject area is one that is not covered by present FCC regulations. The establishment of procurement and operating policies for the Executive Branch is certainly another very effective method for implementing a policy goal as all of you involved with computers are well aware. And, of course, a policy may be implemented merely by its presentation as a Presidential policy statement or position in a certain area. All of these have been used in the past and undoubtedly will continue to be used in the future.

OTP'S COMPUTER-COMMUNICATIONS CHARTER

OTP's responsibilities in the computer communications area are spelled out specifically in the Executive Order establishing the Office. It is the only agency within the Executive Branch charged with examining the effects of the interaction of computers and communications and recommending policies in this area. We have initiated several programs in this area and are proceeding to examine the effects of these interactions.

BASIC POLICY ISSUES

Some of the major policy issues and problems in this area have already been recognized. These are subjects such as privacy, security, standardization, and the effects of future data transmission requirements on the performance of the overall transmission plant. A corollary issue that we feel should also be examined is "What should be the characteristics of the communications plant if it is to properly support the full exploitation of geographically dispersed information and computation systems?" The question now takes on the character of an overall systems organization problem. What are the trade-offs between computation, communications, and storage? Should there be just one central copy of the data base, multiple distributed copies, or should the data base be fragmented with the major portions of it kept near the locations at which will normally be used? What about the distribution of the computing function – should there be intelligent terminals, dumb ones, or something in between? All of these factors have effects on the requirements for both data communications as well as computing, storage, and terminal equipment.

As an initial base point, we would find it very useful to know what the system design might be if it were not restricted to the services and equipment currently available. The sizing and other characteristics of current building blocks may be all wrong.

PROBLEMS IN STARTING POLICY STUDIES

The major problem we have had in getting policy studies started in the computer communications area has been the lack of clearly defined issues or even a general understanding and agreement on what the basic problems are. The practioners of both of the major disciplines involved, communicators and "computerniks," have each assumed that the facilities that will be available in the future will be the same as those existing today. There has been a general attitude on the part of both that little can be done to have any effect on the other. There are also very large intellectual knowledge gaps between these two major disciplines as well as the others that should be considered, such as economic, legal, and social implications. Another problem that we have had to contend with in initiating policy work has been the lack of previous interdisciplinary work that would have provided the base on which to start our studies. Since this basic group work is not available, one of our first tasks will be to develop it.

BASIC QUESTIONS

Some of the questions that we need the answers to are so simple that you wonder why no one can answer them, but then you realize that they may have been ignored in the past because there was nothing that could be done with the answers. In any type of analysis study you try to develop alternative

methods for meeting a given requirement. A question we have often asked is "What are your trade-offs between the quality and the cost of a communications capability?" Such a curve must exist, for you can always overcome the effects of the errors by additional programming or more sophisticated terminal equipment. The same type of question can also be asked about transmission speed and cost. Of course, it is at this point that the problem becomes interesting, for these two curves are definitely interrelated and should be plotted as a surface in 3-dimensional space. The trouble is that the number of dimensions in a complete trade-off analysis does not stop at 3, and it is only with a knowledge of these indifference curves that we can evaluate the effects of various policy options. Another one of our favorite questions that has not been answered satisfactorily is "What would you do with a really cheap one megabit transmission line?" Not that such a line is available today, but it would help to know its possible uses in considering whether or not we should have them.

Free-ranging questions such as these are not wasted effort. It is possible to change the entire complexion of the communications plant of the future since each carrier requires a detailed construction permit from the FCC before constructing any new facilities or modifying existing ones. The usefulness of the answers to these questions in providing guidance as to what future construction should be permitted is obvious.

We are interested in fostering the growth and development of both the computer industry and the telecommunications support that it requires. To encourage this development, the following basic questions need to be answered. How and to what extent will the application of the computer transform our current concepts of network organization and industry structure? What specific national policies will be required to ensure that the benefits of these new service offerings can be realized in a timely manner without undue government control or undesirable economic and social impacts? The question of industry structure, regulation, and competition in the provisions of teleprocessing and data transmission service have also been the subject of extensive study by the FCC. Initial rulings have been made; however, it does not appear that these issues are completely decided yet.

CONCLUSION

Although data communications and data networks are of particular importance and interest to this group today, you must recognize that national telecommunications policy must fully consider all aspects of the problem. Of special importance are the effects of data demands on the switched voice service, which is, and will continue to be, the major use of our nation-wide transmission networks. However, do not draw the inference that because data dollars are small that they will be ignored or not fully considered. The changes in old established policies that have already occurred are examples of the power of this new demand being placed on our national communications facilities.

Computer Networks North of the Border

by Eric Manning
Department of Applied Analysis and Computer Science
University of Waterloo

This paper looks at computer communications in Canada. Its purpose is to survey current and planned activities and to set these i ıe Canadian economic and social context. It is written primarily for those ..aders who may wish to appreciate the circumstances influencing computer communications in Canada.

THE ECONOMIC ENVIRONMENT

Canada has some 21 million people who occupy a land mass greater than that of the United States. Our population is concentrated in a narrow strip along the United States border. Thus, for many purposes, Canada is a country 3,000 miles long and 100 miles wide.

Much of Canada's economy stresses primary industries s. s mining, petroleum and forestry ("rocks and logs"). Secondary ..ıtry – manufacturing and high-technology industry – is relatively weak, and is dominated by subsidiaries of foreign-owned firms. This picture of a pre-industrial economy, however, is altered by the dramatic growth of service industries and the heavy concentration of our people in urban areas. Thus the Canadian economy shows a peculiar mixture of pre-industrial, industrialized, and post-industrial features.

In computing, Canada ranks seventh in the world as to number and value of computers, sixth as to computer value as a fraction of Gross National Product, and second in terms of computer value per capita.

Most of the major American computer manufacturers are represented in Canada; their involvement ranges from sales outlets to firms which do a very substantial amount of manufacturing and research and development. There are also a number of Canadian firms which design and produce products such as integrated circuits, peripherals, and special-purpose systems for world markets. Finally, there are several service bureaux which use large computers and telecommunications to supply computing services to the Canadian and United States markets.

The other major industry of interest is telecommunications. The telephone industry in Canada is modern and efficient; it provides one of the

best voice services, if not the best service, in the world today. Transmission and switching systems use a mixture of United States and Canadian designs, and the industry is supported by Bell-Northern Research, a strong and successful Canadian research and development organization.

Switching systems in Canada include step-by-step and Number 5 Crossbar machines, both of United States design. The principal Canadian switching systems are SF-1 (a small crossbar system) and the SP-1 stored program machine, both designed by Bell-Northern Research. In transmission, there are two cross-country microwave routes using analog techniques and a fair amount of T-1, a short-haul digital system using pulse-code modulation.

In organization, Canadian telephone companies cover a spectrum from privately-owned firms along the lines of AT&T to state-owned and operated utilities on the European model. The toll network is operated by an association of companies called the Trans Canada Telephone System.

The Trans Canada Telephone System, moreover, is not our sole telecommunications carrier. Canadian National/Canadian Pacific Telecommunications offers data services and operates a third transcontinental microwave system, in competition with the Trans Canada Telephone System; the Federal Government provides public telecommunications in the far North; and Telesat Canada, a Crown Corporation, will be offering domestic satellite service in the near future. Finally, cable television definitely exists; Canada is the most heavily "cabled" nation in the world, with nearly 25% of urban households receiving cable service.

THE SOCIAL AND POLITICAL MILIEU

Canada makes very little economic sense. Geographic and economic forces favour North-South rather than East-West links, and thus push us continually towards closer economic integration with the United States. On the other hand, social and cultural forces urge us to retain and strengthen our national independence and identity, to run our own show. Examples of this tension can be described in terms of challenges and national responses.

In the 1860's, the challenge was the desire to bring British Columbia into Confederation, in the face of geographic isolation imposed by the Prairies and the Rocky Mountains. The response was the Canadian Pacific Railway.

In the 1920's, plans were afoot to set up a radio broadcasting network based in New York City, to serve Canada. The response was the Canadian Broadcasting Corporation.

In the 1930's, most cross-Canada air travel was carried by United States airlines. Travel from Vancouver to Toronto, for example, usually went via Seattle, Chicago, and Detroit. The nation responded to this challenge by creating Trans-Canada Airlines, now Air Canada.

In the 1970's, an emerging challenge lies in the growing importance of computer communications to business, government, education – most sectors of national life. Impressive progress is being made in the United States to

build effective, first-class facilities for computer communications. And so the familiar theme repeats itself.

PUBLIC INITIATIVES IN CANADA

The Science Council of Canada is a public body organized to give advice on questions of science policy. Recently, the Council published its Report Number 13 – A Trans Canada Computer Communications Network[1] – and forwarded it to the Federal Cabinet for consideration. Report Number 13 recommended that we create a nation-wide system of computer communications networks by 1980. It called for the construction of a high capacity digital trunk, called the National Spine, to link regional subnetworks. A single Network Organization to own and operate the National Spine was advocated, and a Federal Government role as either regulator of a private venture or as part-owner of a mixed public-private venture was suggested. Finally, Report Number 13 urged that ownership and control of Canadian computer communications facilities remain firmly in Canadian hands.

Meanwhile, the Federal Department of Communications became convinced that computers and communications will become key determinants of our future national life. The findings of the Telecommission – a wide-ranging inquiry into Canadian communications – substantiated this conviction, and an independent body called the Canadian Computer Communications Task Force[2] was established. The Task Force's mandate is to study the issues raised by the merging of communications and computer technologies, and make policy recommendations to Cabinet. The Task Force is expected to complete its work and issue its findings this spring.

INITIATIVES BY THE TRANS CANADA TELEPHONE SYSTEM

Shortly after the Science Council's Report Number 13 was published, the Trans Canada Telephone System announced a number of new initiatives in computer communications.[3] Among these were:

1. coaxial digital trunk, to run from Windsor to Quebec City, at a capacity of 283 megabits per second. The trunk is called LD-4 and will be operational by 1975.
2. a hybrid network using digital local distribution at 9,600 bits per second and analog trunks initially, to extend from coast to coast by 1973. The first phase of this network is now operational.
3. digital microwave radio to supplement the LD-4 trunk, coast-to-coast by 1976.
4. a data service consisting of "front-end" mini-computers to serve customer computers, plus some packet-switching capability. This service is called SCCS.

All of this progress is of course most gratifying. The major unknowns concern the switching discipline to be used (line switching or message switching,

space division or time division, electromechanical or electronic), user charges, and ubiquity. Ubiquity refers to the availability of data services outside the major metropolitan areas, and is of some importance in a large, unevenly-populated country.

PROTOTYPE NETWORKS

This section reviews a few of the computer networks which are planned or under construction in Canada. They can be viewed as prototypes of future public networks.

One network under construction is a terminal-to-computer network being built by the Bank of Montreal. The bank has some 1,100 branches from the Yukon Territory to Newfoundland, and the network will link all of them to a single computer. Its first purpose is to automate teller transactions and it will be operational in 1975.

A consortium of Canadian universities is planning a network called CANUNET (Canadian Universities' Network). It will link their computing centres and the technology will probably resemble that of the United States ARPANET. Considerable effort is being devoted to ensuring that the network will provide useful, popular services from the beginning; transmission will be via landline and possibly satellite.

In Canada, education is the responsibility of the Provinces. The Province of Ontario, for example, funds 14 universities with an annual operating budget of about one-half billion dollars. The portion of this budget devoted to computing is large and growing. Some sort of mechanism to rationalize computing facilities is therefore of interest, and a computer network is the prime candidate at present.

The proposed network is called OUN (Ontario Universities' Network) and it is intended to stress simplicity and economy. Also, the network's impact on the software and hardware of attached host computers is to be minimized, as the average level of expertise available in our computing centres is probably less than that available at ARPA sites, for example.

These goals led to the following design decisions. The network will initially provide terminal-to-computer communications only, and the switches (IMPS, in ARPA terminology) will emulate the communications controllers of the attached host computers. The benefits claimed for this approach are: extremely simple interfacing (almost literally a plug-for-plug replacement of the host's communication controller by the switch), a simple access language ("call computer X," "hang up"), and the possibility of adding host-to-host communications a la ARPANET later. The OUN will have about six attached hosts initially, should be operational around 1974, and hopefully will function as a regional subnet of CANUNET.

These are probably the most ambitious networks planned in Canada at the present time. In addition, simple star networks have been in operation in Quebec and Saskatchewan during the past two years, and similar networks are being discussed in Manitoba and Alberta. Finally, Crown Corporations to

supply computing services to the public and private sectors have been established in at least two Provinces.

NETWORKS RESEARCH

All of the factors discussed above have stimulated a fair amount of computer communications research in Canada. Research in digital transmission and switching is underway at Bell-Northern Research. At the University of Toronto, Professor E. Newhall is continuing work on loop transmission begun at the Bell Telephone Laboratories. At the University of Waterloo, federally-funded research in network applications, computer communications software, new switching disciplines and network structures is being done by members of the Computer Communications Group. Finally, the Communications Research Centre of the Department of Communications is doing telecommunications research and acting as a stimulus for the various research efforts in the universities.

CONCLUSION

Computer communications is receiving considerable attention in Canada. A number of economic and social forces are driving the development of private and public networks. Although the total effort is not large by American standards, we hope to contribute something to the world's store of knowledge and to harness this exciting new technology to serve our future well-being.

REFERENCES

[1] "A Trans Canada Computer Communications Network," Report Number 13 of the Science Council of Canada, Information Canada, Ottawa, September, 1971.

[2] "The Canadian Computer/Communications Task Force," Leaflet issued by the Department of Communications, Ottawa, 1970.

[3] "Computers, Communications and Canada," document issued by the Trans Canada Telephone System, Place Bell Canada, Ottawa, November, 1971.

II

Educational Technology

Educational Technology: A Vote of Confidence

by Sidney P. Marland, Jr.
U.S. Commissioner of Education
Department of Health, Education, and Welfare

Those who insist on playing the advocate's role do so at an admitted risk. If their cause is triumphant, they gain a measure of immortality and certainly a lot of personal satisfaction. But there is always the possibility, particularly if one happens to be touting the abilities of a machine of some kind, that the whole episode will end up embarrassingly. Frank Hague comes to mind.

Hague, arch-boss of American politics as Mayor of Jersey City for three decades, decided to make political hay out of the 1927 opening of the Holland Tunnel linking Manhattan and Jersey City. He invited the Mayor of New York and other dignitaries to assemble under the Hudson River, in the center of the 8,000-foot passageway, that they might witness a demonstration of new fire equipment Hague had purchased to protect his end of the tunnel. At the crucial moment an old truck was set afire. Hague gestured grandly to his men and, as cruel fate would decree, nothing happened. The water-pumping mechanism failed and Hague left, literally under a cloud.

I mention Boss Hague's contretemps because it seems to me that those of us in education who have eagerly espoused the cause of educational technology have suffered a similar embarrassment. Perhaps somewhat incautiously and prematurely, we invited the public to witness the educational miracles technologies are capable of and then, for a variety of reasons, failed to produce anything like a miracle or, in many respects, even a respectable demonstration of the potential of scientific devices and techniques in the direct service of the learning process. As a result, there has been a widespread failure to grasp the relatedness of technology and education and an unfortunate and shortsighted tendency to denigrate the importance of technology as an educational tool.

Critics have had a field day. Charles Silberman, writing in *Crisis in the Classroom*, observes, somewhat tartly, that "a great deal of money and effort . . . have gone into experiments with computer-assisted instruction, whose advocates and prophets have made extravagant predictions of wonders to come." But the waters failed to part, and disillusionment with the whole business, Silberman says, "is becoming almost as widespread as enchantment was a few years ago."

Donald Barr, in a delightful book called *Who Pushed Humpty Dumpty*, has this to say about programmed instruction: "That there is a use for

programmed instruction, and an important use, I do not dispute. It is admirable for the training of inventory clerks, of detail men for pharmaceutical houses, of assembly-line technicians. But let us not call the damned thing education."

Well, what have we to say to that? What about educational technology? Is the damned thing education? No, of course not, not all of education. But is it an important process of education? Emphatically, yes.

We cannot separate a book from a computer as an educational instrument on the grounds that the book is made of paper and ink and the computer is composed of metals and plastics. Both book and computer, as all other artifacts, are in essence human thought and knowledge made tangible, and thus both are legitimate educational machines. Human thought, not physical matter, is the true raw material of technology.

Despite start-up problems, technology in all its forms will, I freely and fearlessly predict, soon be not only important but essential to the pursuit of learning in this country – in our schools, our colleges and universities, and our homes. The wonders will come. Indeed, some of them are already here. I have said repeatedly, and risk the chance of boring you by saying it again today, but I believe that *Sesame Street* and *The Electric Company*, both produced by the Children's Television Workshop in New York, stand among the finest investments the Office of Education has made in any field, and rank among the supreme revelations of my 30 years in education. These shows work. They are teaching millions of children effectively, and, in the case of *Sesame Street*, at an amazingly low cost of $1.29 per pupil per year. Unit costs on *Electric Company* are not yet in. In untold numbers of ways the relationship between these two powerful forces, education and technology, is deepening and broadening. Technology is infiltrating and influencing education by means of television, computers, audio-visual devices, films, satellites, and combinations of the same and more. This is not, as many of us unfortunately predicted a few years ago during the "educational technology decade" of the 1960's, a revolutionary process of change; it is an evolutionary process. And yet it is change nevertheless – a profound and pervasive change, and a change that is, I would say, proceeding at an accelerating pace due to the commitment of groups such as EDUCOM and certainly due to the interest and commitment of the present Administration in Washington. As you know, a major element of the President's 1972 State of the Union message concerned the need for the application of technology to the solution of major social problems and to ensure the general advance of our civilization. And. of course, the President said, as far back as 1970, that "our goal must be to increase use of the television medium and other technological devices to stimulate the desire to learn and to help to teach. The technology is here but we have not learned how to employ it to our full advantage."

My message to you today is essentially a reaffirmation of the President's determination to support the uses of computers, television, and all forms of technology in the cause of education. We intend to pursue a planned course

of support and development of technology, not claiming wonders but gaining adherents and rebuilding public confidence through sound applications of educational technology and through the achievement, with your help, of unquestioned successes.

A primary precondition for the success of this scenario, it seems to me, is establishment forthwith of a coherent Federal policy with regard to educational technology – and I have been in this job long enough to know that the system under which the Office of Education at least has been operating for the past 10 years or so has not been noticeably coherent.

OE has, of course, been a major source for the support, development, and demonstration of technology, particulary computer activities. Over the past six years the Office has funded more than 500 projects involving the use of computers in every conceivable way: tutorial presentations, problem solving, gaming simulation, testing, vocational guidance, instructional management, data analysis, information storage and retrieval, library services, administration, and organization. In 1967 alone, OE contributed about $865 million in support of instructional materials, media and media-based activities. From FY '66 to FY '69 these expenditures totaled nearly $2.5 billion.

But all these activities, as well as those in related areas of technology, though individually useful, cannot be said to have achieved the maximum cumulative results that could have been hoped for. No coherent body of knowledge, for example, concerning the overall usefulness of computers in education has been developed as a consequence of OE-supported projects because our support was provided as part of a Federal response to particular educational problems rather than for the more general purpose of building knowledge in the field. The use of computers was incidental to the basic educational objective of each project, whether it was educational diagnosis and prescription, improved administration, or whatever.

In short, we have helped a project here and a project there, a college here or a library there, but the Office, in my judgment, has not contributed to the design and fulfillment of an overall strategy of technological innovation to an extent commensurate with its investment, or to a degree compatible with the leadership role that rightly should be expected of the national government.

I was taken aback to discover, for example, that our funds for the support of computer activities come not from one program, one office, or under one legislative authorization, but are provided under 15 different legislative titles and acts which are administered by virtually every bureau and office in OE. The money comes from Title III of the Elementary and Secondary Education Act, the Cooperative Research Act, Title IV of ESEA, Part F of the Higher Education Act, and so forth – a situation hardly reflective of coherent planning or systematic design.

Our intention is to gather the loose programmatic threads into a synthesized, interactive, coherent fabric of support. And so one of the major tasks that has occupied the management of OE, including me, is to find ways to pull together for greater effect the almost comically scattered legislative,

funding, and planning resources of the Office. As things stand, we administer well over 100 separate programs, and require our grantees, whether under formula or discretionary authorities, to deal with immense amounts of duplicative and wasteful paperwork, as well as hundreds of program people, in order to get from us funds that serve only one purpose – education. We are trying very hard to change all that.

The Administration's plan for pulling together our formula programs into a reasonable package of aid to the States is called education revenue sharing, a fascinating and compelling topic, though not the one for this audience today.

But our plan to reorganize and recast our discretionary authorities is of more interest to you. We call it Educational Renewal and an important part of this administrative regrouping has to do with educational technology. In early 1970, technology, as you may be aware, began its rightful rise to a more prominent position in the OE organization when it was grouped with our library programs to form a Bureau of Libraries and Educational Technology (BLET). Development of our renewal strategy in anticipation of the creation of the National Institute of Education created need for a different organizational alignment. Thus, BLET's technology component was transferred last winter to the office of the Deputy Commissioner for Renewal, Don Davies, and reestablished as the National Center for Educational Technology.

This represents more, I hope, than merely shifting alphabet blocks on a many-armed organizational chart. I believe that the National Center for Educational Technology can be the vibrant point of contact between the Federal Government and the many problem areas throughout education for which technology should be able to provide workable solutions. Specifically we see NCET as having three major purposes. First, it would direct virtually all the dollars of the Office of Education specifically intended for the support of the development and application of technology, seeking and applying sophisticated new products such as audio-visual cassettes for individualized instruction in institutions or at home. Second, NCET would coordinate all OE educational technology activities such as the support for new kinds of teaching devices sponsored by our Bureau of Education for the Handicapped and the many technologically oriented projects mounted by our Bureau of Adult, Vocational, and Technical Education. In other words, NCET will be a central source of knowledge concerning the total range of OE-sponsored technology-for-education activities. Third, NCET would serve as a true national focus for educational technology, defining public issues, encouraging States and localities to apply to their own situations the benefits of computers, television, and other forms of telecommunications as created, researched and validated by the National Institute of Education, EDUCOM, and other agencies and organizations.

For Fiscal Year 1973 we have asked Congress to provide NCET with a $30 million budget; $20 million is spoken for, including $13 million for our Educational Broadcasting Facilities Program, which has made a major contribution in expanding the number of non-commercial television stations

in operation, and $7 million to support the Children's Television Workshop at the same level as this year. The remaining $10 million will be used for large-scale demonstrations of the use of modern educational technology, including television, computers, teaching machines, and other techniques. About $5 million of this request will be used to support a massive educational telecommunication demonstration for the Rocky Mountain States using a NASA satellite scheduled for launching in the spring of 1973. In addition, we expect to support projects utilizing cable television for the schools and a bilingual children's television project for Spanish-speaking preschoolers modeled after *Sesame Street* and *The Electric Company*.

With the administrative framework of NCET in place and operating, including a new Associate Commissioner whom we hope to name shortly, the next logical step would be to seek redesigned legislation that would strengthen our hand in several ways: first, our ability to support newly developed telecommunications technologies; second, our ability to work with Federal, State, and local officials in moving experimental hardware/software packages to the applied research stage (The satellite experiments we are carrying out in cooperation with NASA, other elements of HEW, and various State and regional groups are good examples of this kind of cooperative effort); third, to provide State public service telecommunications authorities with grants to develop coordinated plans; and fourth, programming authority for the Office of Education, enabling us to expand our support for the research and development of strictly educational software such as *Sesame Street*. We are continuing to work closely with the White House and the Corporation for Public Broadcasting in the development of this technology legislation.

While I am convinced that the organizational and legislative initiatives I have described are definitely necessary to facilitate the changes in educational practice that a number of factors, principally the knowledge explosion and the rising cost of all forms of education, impel us to seek, I do not mean to imply by what I have said that the field of educational technology has stood still during these past few years. That certainly is not the case. There are many excellent and encouraging developments afoot. Certainly the EDUCOM consortium is one of the very hopeful movements, and Henry Chauncey and all those who have had a hand in your activities are to be sincerely congratulated. Your efforts to improve and increase the use of computers and other communications technology in colleges and universities during the eight years of EDUCOM's existence have helped to establish a number of important new concepts and practices. I am pleased that the Office of Education has been one of the several organizations supporting your activities and I would encourage you to sustain and develop your relationship with OE, particularly now that educational technology is beginning to receive rightful recognition and attention in the Federal bureaucracy.

It is also true that despite our obvious need for greater efficiency in guiding our technology support, the Office has selectively channeled funds in ways that reflect considerable wisdom on the part of the men and women in

OE who have been engaged in these projects.

Sesame Street and *The Electric Company* are the premiere items, of course. *The Electric Company* had been telecast only a few weeks this past fall when surveys indicated that the show had an in-school audience of at least two million youngsters in the first through the sixth grades. In cities with more than 180,000 residents two out of three schools with TV receivers and access to the series were tuning in. Given our schools' traditional reluctance to adopt innovative practices, I would call that a remarkable record. Moreover, these children are not just being entertained. They are being taught. Educational Testing Service's study of 200 second graders in Fresno, California revealed that pupils who watched *The Electric Company* regularly during its first two months on the air held a consistent edge over non-viewers in 17 test areas designed to measure basic reading skills. And subsequent authoritative studies have confirmed and expanded these results.

In the area of computers, one of OE's least publicized projects, operated by the Ohio College Library Center (OCLC), has resulted in establishment of the first State-wide library cataloging network. The computer-based system handles all cataloging and technical processing requirements of the 80-odd college libraries it now serves. During its first year of operation the system saved member libraries nearly $400,000 in cataloging costs. In addition to the on-line cataloging system now in operation which can process 10,000 catalogue cards daily, OCLC is moving toward a total automation system which will give the user in any member college push-button access through his college's terminal to any book in the network. OE has invested $215,000 in this system since January of 1970.

Some of you may also be familiar with another OE-supported project, the Computer Utility for Educational Systems (CUES). This system, also known as the National Education Computer Service, began in the late 60's as a feasibility study. It is now about to begin providing computer services nation-wide to school systems and small colleges which do not have the financial resources to own and operate a large, multi-purpose computer system.

In the CUES system, a large computer operated by the Western Institute for Science and Technology in Waco, Texas, will be connected to participating institutions who can afford modest terminals. Once operational, and we hope 60 to 70 terminals will be involved by this time next year, CUES will provide four basic services: first, workaday chores such as recordkeeping, scheduling, payrolling, and so forth; second, a basic course in computer technology for students in the receiving systems to familiarize them with the equipment and teach basic skills; third, curriculum support through problem-solving exercises enabling students in courses such as chemistry, mathematics, business education to use the computer to support their in-class work; fourth, vocational training, enabling the receiving schools to train some students as key punch operators and others as beginning programmers.

This year OE has invested $400,000 in Cooperative Research funds to begin the difficult job of moving CUES off the drawing board and into

educational practice. It is our hope that CUES will provide the educational community, and private enterprise as well, with verifiable evidence of the range of uses computers can reasonably and economically provide to education. What we learn from CUES should be of immense importance to all of us who think technology must succeed if education itself is to succeed in the difficult and challenging years and decades that lie just ahead.

I have no really substantial doubts that technology will eventually succeed in education because, with some hard thinking here and some tinkering there and some generous funding all around, machines usually do what they are supposed to do. Just because Boss Hague's fire equipment failed to operate at a rather crucial time does not indicate that it would never function. The fire was eventually put out. As President Nixon suggests, our problems will not be resolved by the invention of further technology, but by learning to use that which we now have. This is fundamentally a matter of conceptualization, of opening our minds to the rich potential of the technological-educational marriage.

But I would suggest that we must think very hard about the kind of success we are seeking for educational technology. What concerns me is the rather frightening possibility, and I am certainly not the first to perceive it, that in our rush to efficiency we will lose our humanity, that in our desire to cut the cost of education and increase productivity, we will lose sight of the primary purpose of education, which must always be to confer upon our students above all else a sense of humanity, a sense of the oneness of all mankind, a sense of communion between teacher and learner.

I do not agree with all that Silberman says, but he is correct when he asserts that a mechanically minded approach to educational technology is likely to "compound what is most wrong with American education – its failure to develop sensitive, autonomous, thinking, humane individuals." And these qualities, perhaps to our good fortune, can never be reduced to computer "bits" and can never be enshrined in the most sophisticated computer memory. Thinking is painful and learning how to think is difficult, and education, whether computer-assisted or not, whether conveyed by means of a television screen or bounced off a satellite, must lead ceaselessly to the thought process if it is to be truly education and not some lesser form of information transferral.

Tom James, formerly Dean of Stanford's School of Education, expressed his reservations about educational technology in this way: "The developing technologies for education" he writes, "must display more humility and more imagination than they have thus far. On the one hand, the micro-efforts to transmit bits of facts ignore the great sweep of humane experience to which the teacher in the past and the technologies developed in the future can only be window-openers; and on the other hand, the technologies emerging can through the use of multi-media give wings to the human mind in ways that are yet to be devised in helping man to encompass his environment."

As Dean James suggests, the future of education will be determined not so much by the strictly scientific capacities of the United States – (we know

they are awesome) – but by the imaginative and humane uses to which we put those capacities. I think we have good reason to be modest in our claims, and to shun excessive expectations of our machines, as we press hard toward our objective of making the new technology the instrument of the teacher and the servant of education.

III

Group Discussions

1. *Alternate Technologies for Networks*

Chairman: Henry McDonald
Associate Director
Electronics and Computer Systems
Research Laboratories
Bell Telephone Laboratories Inc.

A. G. Fraser
Bell Telephone Laboratories Inc.

Recorder: George Stockman
University of Maryland

The discussion in this session was motivated by the need to consider the following problems in data communication:

1. There is a need to investigate the use of multiple computers in communication networks on a local basis rather than on a national basis a'la ARPA.
2. There is a need to develop and implement a technology that will greatly diminish the interface expense and complexity as is presently encountered when linking to the ARPA Network.
3. There is a pressing need to establish a standard protocol for data communication among various devices of a network. In particular, means must be adopted so that nodal devices can be interfaced to a network in a way that is safe and inexpensive. Such standards must be established before common carriers can make the large investment necessary to provide for the data communications service that will be demanded in the future.

Two technical presentations followed. Each presentation described network technology in actual use or in development.

Chairman McDonald described a laboratory system that is operational at Murray Hill. A large mini-computer with virtual memory is connected via a communication loop with a PDP-8, a Honeywell 316, several CRTs, and other laboratory devices. Interaction is controlled by polling; and all devices on the loop are confined to the local laboratory.

A uniform node terminal set-up is used throughout the loop as sketched in Figure 1. The essential concept is that the node/device interfacer provides a hardware/software interface with "unfriendly" devices, thus linking the devices to the network in a safe and predictible way. The hardware embodiment of this interface unit is less than a handful in size and less than a

few hundred dollars in cost. This is quite a contrast to the IMP units necessary for ARPA interface.

This operational laboratory network provides an example of a small local network having the advantages of low cost and simple interface. Users have found the mini-computers on the network to be much more powerful than when standing alone.

Mr. Fraser has analyzed the functions of computing and communications in networks in an attempt to define exactly what is needed at the computer/communications-link interface. He isolated four basic functions that must be performed by any unit providing such an interface. These functions are:

1. Coordination – input/output balance in and out of the network must be provided.
2. Multiplexing – any single device must be effectively tied into a network where many devices are to communicate.
3. Signaling – there must be provision for interprocess communication between any processes distributed on the network.
4. Error control – error detecting and correcting strategies must be incorporated into the communication facility.

The terminal interface unit, or TIU, must provide for 1-4 above. Fraser envisions it as a small intelligent device consisting of a multiplexor, a storage buffer, and a control computer. The TIU must not only provide for the above functions, but it also must provide them in a way that makes for a constant user interface, independent of changes in switching technology and transmission rate. A schematic representation of the communication link that the TIU provides the terminal device is shown in Figure 2.

Figure 3 shows a possible communication loop utilizing a TIU at each node. The TIUs and the large control switch replace in function the IMPs as used in ARPA. Data is passed in a conveyor-belt fashion on a time-divided bus. Each TIU seizes each frame. It processes only the input data addressed to the particular terminal it is servicing, and it outputs data from the terminal in empty frames. Since data flows through the network in a serial manner, the LAM unit is needed in case of malfunction to shunt the connection at any terminal node by command from the central switch.

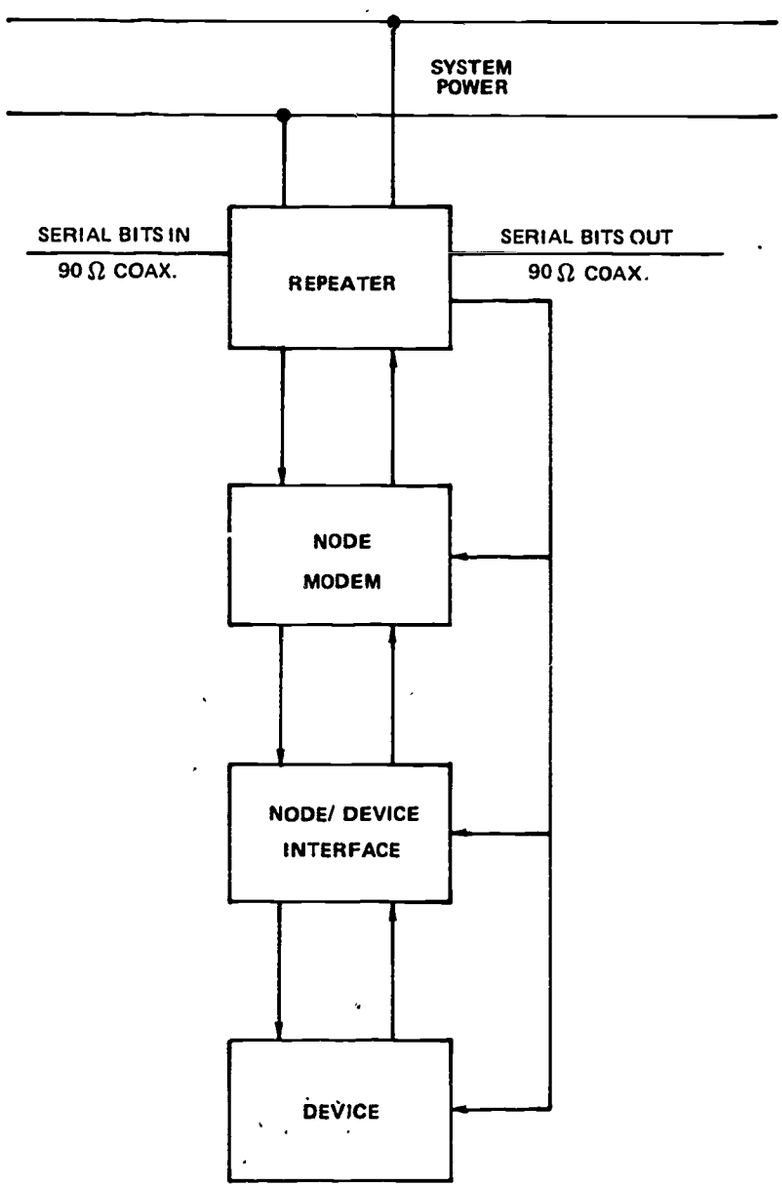
SYSTEM
POWER
SERIAL BITS IN
90 Ω COAX.
REPEATER
SERIAL BITS OUT
90 Ω COAX.
NODE
MODEM
NODE/ DEVICE
INTERFACE
DEVICE

Figure 1

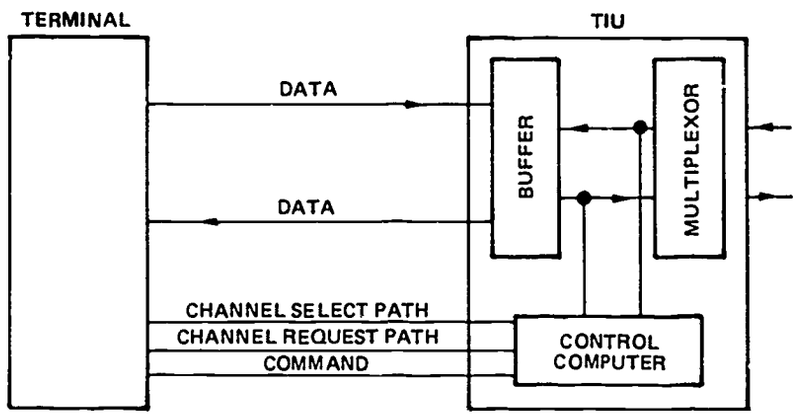

Figure 2

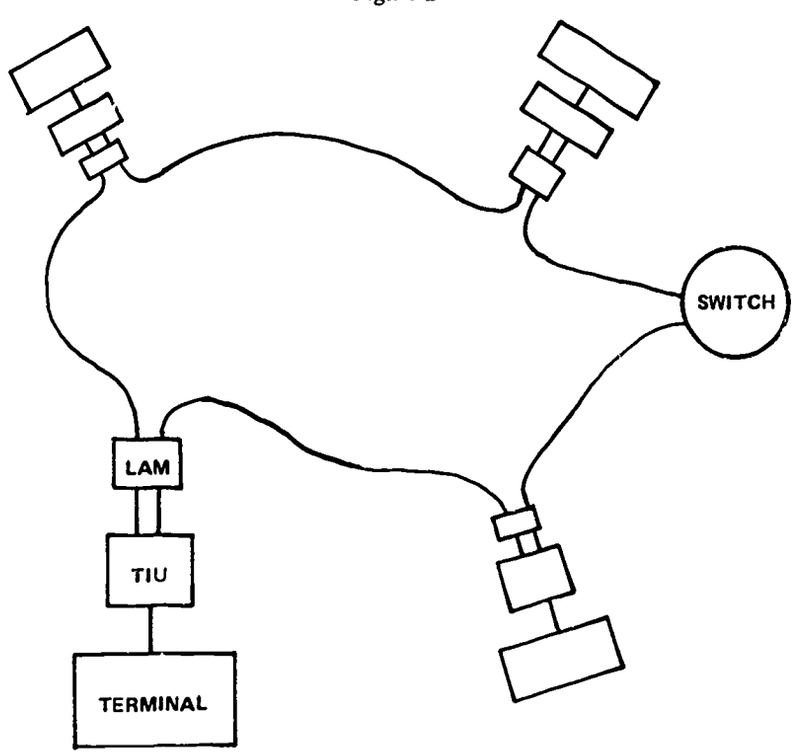

Figure 3

2. *ARPANET*
Technical Considerations

Chairman: Steve Crocker
R&D Program Manager
Advanced Research Project Agency

Frank Heart
Bolt, Beranek, and Newman

Peggy Karp
MITRE Corporation

Robert Metcalfe
Project MAC, MIT

Lee Talbert
Bolt, Beranek, and Newman

David Walden
Bolt, Beranek, and Newman

James E. White
Stanford Research Institute

Recorder: Marvin Zelkowitz
University of Maryland

This session consisted of a question and answer period between the audience and a panel of experts on the ARPANET. The questions which were asked resulted in the following description of the ARPA Computer Network.

The ARPANET will provide an inexpensive means of communicating with various computers, called host computers, situated in the network. The network itself does not provide any user services since all usage of machines in the network is via a private arrangement between the user and the host computer that he wishes to use. Some of the host computers attached to the network provide special facilities. These include the parallel processing ILLIAC IV, the trillion bit data computer at the NASA Ames Research Center, and the Network Information Center which is based at the Stanford Research Institute.

The Network Information Center compiles a listing of resources and facilities available on the network. It also maintains a journal facility which enables messages to be transferred among various user terminals. Terminals can also be tied together so various users can obtain the same results simultaneously.

The trillion bit data computer is currently being installed and should be operational within a year. A data language to be used to access information is currently being developed. While not implemented yet, the manual for the language has been written and is available from Computer Corporation of America, Cambridge, Massachusetts. The advantage of this facility is that it will store information at a cost orders of magnitude cheaper than current disk drives. This data computer will be run as a host computer on the network. Users will have to make special arrangements (mostly, agree to pay for the space) in order to use the file space available. Sharing of data bases is purely

up to the user to decide. There are no built-in public files in the network.

In order to get on the network, the user's terminal must have access to either a host which is connected to an IMP (Interface Message Processor) or directly to a TIP (Terminal Interface Processor). The IMPs connect the host computer to the network, while the TIP connects terminals to the network. Joining the network is relatively easy; however, it takes approximately 9 months to order the 50KB lines needed for the network and about $50K to buy an IMP. Current usage is low, so that full cost-effectiveness has not yet been achieved; the cost should drop to $.30 per megabit when the system nears capacity. Presently it is easy to use the network – find a TIP and make the arrangements to call into it. Currently host computers must be within 2000 feet of an IMP; however, there is experimentation with the use of modems, so that future hosts could be several miles from the IMP.

The ARPANET consists of many different time-sharing host computers. Mr. White described, particularly, the interfacing of an IBM 360/75 using OS-MVT with HASP and a home grown time-sharing system to the network. The host-IMP interface was written as an OS user job and runs in a single region of core. OS was not modified for this application. Communication between the user program and the host-IMP program is handled via special SVC's added to the OS system. The ARPANET system runs in 200K of core. This core includes the applications programs running on the network. It took 6 months from the first definition of an IMP until the 360 was operational.

While the ARPANET handles message switching, it does not attempt to tackle the problem of host-to-host protocols. That is, can two host computers understand one another? It was then pointed out that 95% of all messages through the network are terminal to host messages (versus host-to-host messages), although less than 95% of the bits transferred are from terminals (e.g., transferring of a large file from one host to another greatly outweighs a terminal to host message).

The network itself is a taut network, there is very little internal storage. Once a message enters an IMP, it is almost immediately relayed to the next IMP.

The question of what the network can do was brought up again. The ARPANET can be used to contain a system of subnets (e.g., banks, credit card companies); however, an IMP cannot simultaneously send the same message to more than one node; the host computer would have to transmit the same message several times in order to get that effect. Private networks can use the network effectively. Among the benefits which must be considered in using the network as a private subnetwork is the reliability of the network. The expected error rate is about one bit error in 10^{12} bits transmitted.

Documentation on the ARPA Network is available in:

1. Proceedings of the Spring Joint Computer Conference, 1970 (the technical session beginning on Page 543).
2. Proceedings of the Spring Joint Computer Conference, 1972 (Page 295).
3. BBN's Quarterly Reports to ARPA via the Clearinghouse.

3. *Management Concerns for National and Regional Networks*

Chairman: **David W. Morrisroe**
Director of Financial Services
California Institute of Technology

Richard Norris
Arthur D. Little, Inc.

Warren J. Haas
Columbia University

Recorder: Denis Carpio
University of Pennsylvania

The panel discussion began with Mr. Morrisroe presenting the view that financial constraints on educational institutions are the primary impetus for networks. The economics of cost and risk sharing will lead to network ventures. Some of the critical issues that must be resolved are pricing policy, proportion of cost-sharing, on-site assistance, length of the initial trial period and scheduling priorities. Mr. Haas followed with a characterization of questions and items university administrators must consider in assessing institutional action relative to network alliances. One of the important issues concerns the relationship between the network instruction goals, and institutional resources. Mr. Norris presented some organizational issues concerning networks. He recommends the use of a common distributed network by all the various national and/or regional consortia.

THE FINANCIAL IMPERATIVES FOR NETWORKS

Mr. Morrisroe described his experience in California with a regional network for university computing. In a short survey in California, it was found that generally, 3-4% of the total expenditures of research universities are for the support of central computing services. In addition, between one to two dollars are spent for non-hardware items for each dollar spent on hardware. There is a predominance of "deficits" among computer centers. Consequently, cost-reduction and judicious allocation of limited resources are the primary concerns of computer centers and institutions.

From the university point of view, funds for network services will likely come from the budget currently appropriated for on-site computing. Thus, the total computing and network budget will probably remain at 3-4% of the total university expenditures. With this situation, the impetus for joining networks will be primarily the economics of cost and risk sharing. This is happening now. Duke, UNC, and North Carolina State have formed the Tri-University Computing Center. There is one in Texas and in Oregon. There are others in the mid-west. Caltech, USC, and UCLA are investigating a network arrangement. The challenge to the network concept is no longer technical or scientific - it is financial risk.

In evaluating risk, an institution must consider the following: convenience to the faculty and students; price or computing charges; formal and informal assistance from on-site computing specialists; autonomy and flexibility; and last, but not least, avoid being financially burned.

This risk factor can be minimized by sharing the risk among members of a consortium. The proportion of the risk borne by each member will depend on the fraction of the network resources and services that a particular member needs or uses.

In summary:

1. The network concept is attractive given the difficult financial environment of higher education and its survival will depend on how well it can be adapted to this environment.
2. If left to themselves, universities may evaluate networks on short-range economic grounds, and this would be unfortunate.
3. Network consortia will likely multiply, but these will need outside support in the short-run.
4. Good faith among institutions and critical attention to the details of pricing policy, proportion of cost-sharing, on-site assistance, length of the trial period, and scheduling priorities are necessary.
5. Finally, with the support of NSF, ARPA, or other agencies, the faculties and computer experts at institutions will develop the network concepts in ways not yet visualized and into a positive national asset.

ADMINISTRATIVE ISSUES RELATIVE TO NETWORK ALLIANCES

Mr. Haas discussed concerns of administrators who are considering participating in networks for computing.

Questions that administrators ask in evaluating network ventures can be divided into three categories: technical questions, issues relating to the network policy-making mechanism, and finally, issues about the relationship between networks, instruction goals, and institutional resources.

Generally, university administrators do not have the technical background to evaluate alternative computer systems. To aid administrators in comparing different sources of computer services, a set of comparable performance measures must be developed and determined for these systems. For example, operational measures for such concepts as network stability, network capacity, network flexibility, network charges (cost), service growth, network and data reliability, data security, and ease-of-use are needed. In addition, the relationships among some of these factors, such as computer capabilities and total cost must be determined.

The primary issues relating to the policy-making mechanism concern the protection of the interests of the institutions. Each institution must have some assurance that its evolving service needs will be satisfied effectively and economically. Consequently, universities must have effective influence on the policy-making mechanism.

The relationship between networks, instruction goals, and institutional resources are important. Computational service needs must be assessed in the light of institutional goals and a balanced use of resources. The process of relating these factors is complex and difficult. It is possible that rather than expressing benefits in a quantitative way, it might be better to express costs in terms that are comparable to that used to describe benefits.

Networks have several purposes, but the most important product of a national network will be increased access to information. In addition, networks should promote new opportunities for research in the process of information distribution itself. Obviously, methods to control the use of computer and information resources will have to be devised. However, economic considerations alone should not constrain access to information even though economic means might be necessary to control the use of the system.

ORGANIZATIONAL ISSUES CONCERNING NETWORKS

Mr. Norris suggested that networks are now sufficiently attractive technically to make organizational issues timely and relevant. Consider the following questions:

1. Who should manage the network?
2. Who should make policies and what should these be?
3. What should the membership policies be?
4. What should be the relationships among members, regional or disciplinary subnets, and the national network?
5. What kind of standards are needed regarding priorities, security and technical compatibility?
6. How do we ensure the effective and efficient operation of the network now and in the future?

These are difficult questions. But the problem can be analyzed by dividing it into two parts: the organization of the communications network; and the organization of the computer centers and the users.

The network organization problems can, in turn, be expressed in terms of the *types of networks*, while the membership organization problem can be investigated in terms of the *types of sharing*.

There are two types of networks. In the directed net a node is either (but not both) a user or a server (computer). Generally, there is only one server node. In the distributed net a node may be both a user and a server. There are multiple paths between nodes and alternative routes via intermediate nodes.

There are two types of sharing. In a buyers/sellers sharing arrangement the seller operates the net and assumes all the risks. The buyer has a choice among several sellers. In a joint venture sharing arrangement the costs, risks, and management of the network are shared by the participating institutions.

The two types of networks and the two types of sharing lead to four possible organizational forms. These are:

1. *Directed Net/Sellers and Buyers*. The seller operates the network and

the computer center. Examples are commercial services, and most regional networks.

2. *Directed Net/Joint Ventures.* The computer center operates the net but the overall management and operation is shared. The prime example is TUCC.
3. *Distributed Net/Sellers and Buyers.* The ARPA Net is an example. The net is operated separately from the computer centers. Presently, the major problems are: (a). It needs large capital investments and a high volume of usage; (b) At present, there is a restricted membership; (c) It is difficult to use, especially for the casual user; and finally, (d) There are many sellers but few buyers.
4. *Distributed Net/Joint Ventures.* There is no example of this type at present.

It is difficult to conceive of a single, large distributed network as a single joint venture. However, it is not too difficult to have *a variety of joint ventures using a large, common distributed net operated by a separate service organization.* The advantages of this arrangement are: (1) Users mainly use their own joint venture facilities and can learn to use these more easily; (2) Volume can be built up rapidly; (3) The types of pooling are not constrained; (4) The joint ventures have less risk; (5) Each joint venture has the flexibility to change and grow and retains the option to stay with or leave the net; and (6) With several disciplinary joint ventures on the network, different groups in the same institution can share the same node.

With these points in mind, it is imperative that the different joint ventures should be encouraged to use a common distributed net. This means that *a standard net* must be selected as soon as possible. Immediate action in this area is necessary for the following reasons: (1) Private networks, especially disciplinary nets, are increasing and soon it will be difficult to standardize; (2) Waiting to find the optimum type of network technology is like chasing a carrot; and (3) The potential savings available through such an action is large relative to the cost differential between different network technologies or types.

It is likely that an independent carrier may have to operate a national network. To ensure the effectiveness and efficiency of this organization, a supervisory body may have to be created.

DISCUSSION

Several opinions were expressed during the open discussion. One participant felt that the network concept will be attractive to the universities under certain conditions: (1) The national network must be operated by a single, government regulated organization; (2) There must be continued financial pressure on universities and computer centers; and, (3) New, better, and a larger variety of services must be available through the network.

From the university point of view, the major source of savings arising from network alliances will be in hardware costs rather than personnel costs.

Other participants suggested that cost savings associated with network membership may not be realized unless universities exercise control to ensure the proper and economic use of network services. Most participants agreed that the experience with TUCC and the Harvard-MIT joint venture indicate that economic benefits are significant, that the service is satisfactory and that the concept of joint management is workaole.

The creation of regional networks can either be a step towards or a step away from a national network depending on factors such as the imbalance between demand and capacity (or resources) within and between regions and the amount of information transfer between regions.

4. *Regional Networks and Instruction*

Chairman: Thomas Kurtz
Director, Kiewit Computation Center
Dartmouth College

Ronald Blum
Director, CONDUIT
Duke University

Judith Malkin
Texas Regional Computing Project
University of Texas

Louis Parker
North Carolina Educational Computing Service

Theodore Sjoerdsma
University of Iowa

Recorder: Len Swanson
EDUCOM

Thomas Kurtz gave a brief history of events leading up to the formation of CONDUIT. Since 1968 NSF has funded some thirty regional computing networks involving colleges and universities, and in some cases secondary schools. Some continued to operate after NSF funding ceased, but many did not. It was discovered that there were few technical problems involved in setting up a regional network; the difficult issue was what to do with it after it was established. Little was available in the way of software, texts, and other pedagogical materials that would support computer use in instruction. A major problem was the lack of materials that would complement conventional instruction, particularly in the sciences and social sciences. Only a few institutions were able to develop their own materials.

NSF has in recent years sponsored a number of projects to develop instructional materials. The University of Iowa has done work in mathematics and biology, and Dartmouth College has developed materials in physics and mathematics. But a remaining problem has been the transportability of these materials, and on this we are still groping.

Very recently NSF funded a cooperative project of five regional networks to study the problem of transporting instructional computing materials. The name of this project is CONDUIT. The five cooperating regional centers are: Dartmouth College, the University of Iowa, the North Carolina Educational Computing Service, the Oregon State University Network, and the University of Texas Regional Computing Project.

Ronald Blum described one of the important human problems of regional networks as the conflict between provincial interests and larger interests. CONDUIT is an attempt to rationalize differing interests by developing guidelines that will enable the transport of computer-based instructional materials. The emphasis is on educational materials in general, rather than simply computer programs.

CONDUIT will attack the problem of transportability with two separate but overlapping efforts. First, guidelines will be developed for transporting instructional materials. Second, standards for documentation will be developed and an information center will be established. The information center will maintain a data base containing information on materials that are available. The purpose of this center will be to allow a user to move from one level of documentation to another, with the help of CONDUIT, to determine if he wants to adopt the materials.

CONDUIT will also attempt to determine what level of information is important to users, and exactly what kinds of materials they want. The data base will initially contain materials contributed by the five regional centers. When more is known about what users want and need, the information center will be opened to the general educational community. In this sense CONDUIT will serve as a feasibility study for the transport and dissemination of information about instructional materials.

The Directors of the five regional computing centers will serve as the Policy Board for CONDUIT, with responsibility for major decisions and for setting policy. The central administration, under the direction of Ronald Blum, will work primarily with the curriculum coordinators of the five centers. The latter group will be responsible for coordinating activities of their own centers and for getting the work of the project done. The central administration will collect and organize the data base, drawing first from the five centers and later from the general educational community. It will also work with the authors of instructional materials, and with the public.

Summer seminars for faculty in five disciplines are now being organized. The disciplines to be covered are: physics, mathematics, social sciences (October), chemistry, and financial sciences. The purpose of the seminars will be to teach faculty how to use the materials. The initial selection of materials to be included will be made by a committee for each discipline. Each committee, consisting of faculty members in that discipline, will put together materials that they think are worthy of dissemination. An evaluator, reporting to the central administration, will be responsible for later testing of the materials.

After the materials have been tested an attempt will be made to determine what makes certain materials successful and others not, why materials have not moved, how to make them move, and what it is that makes certain materials worth transporting.

Ernie Anastasio (Educational Testing Service) pointed out that there seem to be two explanations for the difficulty of transportability: (1) it is too expensive to transport software, and (2) there has been little if any demonstration that materials are educationally valid. The programming language or computer requirements of particular instructional materials is not the real issue; rather, it is whether or not the materials will work. Thus, the testing and evaluation of materials will be more useful than the establishment of an information center.

Ronald Blum agreed that one of the project constraints is the question of

the validity of instructional materials, but the best we can hope to do at this point is to rely on the professional judgment of the discipline committees for determinations of effectiveness and validity. The important thing is to get something substantial done now, and then refine the evaluation of materials later.

Louis Parker added that NSF has separately funded an effort to examine the educational validity of software, and that CONDUIT's purpose is limited to the transportability problem. There must, of course, be some judicious selection of materials or the transportability test would be meaningless.

Judith Malkin commented that one important indicator of effectiveness is that materials are being used by the professor who developed them. Ernie Anastasio disagreed, saying that since you need to seek out potential faculty users it will be necessary to show that the materials have some validity outside one professor's classroom.

Louis Parker reported that North Carolina has in the past emphasized the acquisition of outside materials rather than in-house development. They have now collected a few hundred program , and can point to a number of programs that have been successful at North Carolina as well as at the originating institution. Theodore Sjoerdsma added that materials are not just being developed by elite professors working on their own. At Iowa a team of two faculty members work together. A course is developed during the first semester, taught in the classroom the second semester, and tested outside the network the third semester. This is the kind of test needed to determine which materials are most useful. It is admittedly subjective, but does provide some indication of validity.

W. H. Sandeford pointed out that the United States Naval Academy has transported the entire Dartmouth Operating system and programs, and had it up and running in one month. They have been operating for 15 months and will have over 120 courses using the computer in the fall semester. The availability of the system generated considerable enthusiasm among the faculty, who were not interested in computer-based social science materials until the system was made available to them. Louis Parker pointed out that this is a good example of transportability using the same equipment.

Herbert Maisel (Georgetown University) pointed out that CONDUIT is engaging in a marketing effort and that this will take revenue away from the publishers of textbooks and other instructional materials. Ronald Blum responded by saying that CONDUIT is not trying to promote any of the materials, but rather letting the marketplace determine what is educationally viable just as textbooks are tested by exposure to the market. CONDUIT will measure the requests made against the data base and will ask for positive and negative reactions about the materials from users.

Michael Hall remarked that James Coleman's study of education in the schools was a test of educational validity, and his results showed that the variables are not yet known. It is impossible to design a scientific test of educational validity. Dr. Hall's discipline committee, social sciences, will deliberately select programs that are innovative and deviate from traditional

educational materials. A great deal of material has been developed and has simply not moved. Why not? That is what CONDUIT is all about.

Michael Hall told of one experience in attempting to acquire instructional software. After the 1970 Iowa Conference on Computers in the Undergraduate Curricula, Dr. Joseph Denk of the North Carolina Educational Computing Service wrote to seventy of the authors of papers published in the conference proceedings who had specifically mentioned one or more instructional programs that were up and running. Sixty of those authors either did not respond or replied that the programs were not available for one reason or another. The materials available through CONDUIT will have at least been operational at one of the centers, and will be known to be available to users.

Herbert Maisel emphasized that one must recognize the market function and its importance. Ronald Blum answered by saying that CONDUIT does not want to push specific programs or materials, but simply wants to make it known that it has good materials that are available. Its chief concern is the public interest. CONDUIT would like to be self-supporting, and would welcome the interest of publishers. Louis Parker reiterated that the transportability aspects of the problem are uppermost. W. H. Sandeford pointed out again that the major problem has been identifying the location of available materials.

Ronald Blum described the information center data base and the levels of documentation available to the user. The first level of documentation will be annotated bibliographies, containing title, author, and other identifying information, made available through the CONDUIT newsletter. The second level of documentation will be a catalogue produced from the file entries. All available materials will be included, without review. The data base, referred to as the third level of documentation, will contain information on each course or program made available. This information will include abstracts, extracts, mode of usage, commentaries, and other documentary data. The data base will also contain keys for locating the data. The fourth level of documentation will be selective searches and requests for specific products, such as listings. There will be minimal cost for this service. At the fifth level a user can write to the program originator for the source programs, help in getting the course implemented, consultation, etc.

CONDUIT will not itself transfer the programs, nor will it provide a means for users to test the programs remotely. This might be done by going directly to the source. CONDUIT would like to provide remote teletype access to the data base for various levels of products, and this might be done at a later time, perhaps on a national level.

The purpose of the summer faculty workshops is to familiarize the participants with the material to be used and tested, to describe the nature of the transportability test and the parameters to be explored, and to acquaint the participants with the mechanisms for collecting the data needed for evaluating the transportability test.

Thomas Blaskovics (West Virginia University) asked how this differs from

the summer sessions on the use of computers in education held by the American Educational Research Association. Theodore Sjoerdsma responded by saying that the CONDUIT workshops are aimed more at finding out how instructional materials can be used, rather than specifically training teachers. Ronald Blum added that CONDUIT is concerned more with the philosophical role of the computer in a discipline. However, its chief concern is not testing materials, but rather making available information about them and making certain that the pedagogical aspects are transported.

5. *Discipline-Oriented Centers*

Chairman: Peter Lykos
Chairman
Committee on Computers in Chemistry
National Research Council

Mark Eisner
National Bureau for
Economic Research, Inc.

Richard Feldman
National Institutes of Health

Michael A. Oxman
National Institutes of Health

Recorder: Elizabeth Hunt
National Science Foundation

Peter Lykos outlined briefly the plan for the discussion session and the selection of the panelists to present various viewpoints of the subject. He said that he would speak as a chemist, representative of the hard sciences, in particular as chairman of the NRC Committee on Computers in Chemistry. Mark Eisner of NBER would be representative of the soft sciences. The two activities of NIH to be described would represent: (1) a major life sciences research in-house activity supported by a major computing facility and ancillary operations and (2) a fund-granting agency supporting research involving uses of the computer. The two NIH activities are more "broad brush" than the first two groups.

STUDY OF A NATIONAL LABORATORY FOR COMPUTATION IN CHEMISTRY

Lykos developed the background for th. ious and careful Study in progress on the desirability and feasibility of es hing a national center for theoretical chemistry.

Chemistry is an experimental science, and fundamental to its conduct is information: its collection, representation, transformation, interpretation, and use. Thus, the information processing machine has greatly enhanced the power of chemistry in a number of diverse ways, including systematic storage and retrieval of chemical information, data logging, data reduction, control of experiments, simulation and modeling of chemical systems, calculations for theoretical chemistry, and, indeed, the actual teaching of chemistry. Quantum chemistry reacted to the impact of the computer quite soon after its development, and many chemists now use tools provided by quantum chemistry. The increasing availability of computers has greatly enhanced such use. In fact, bulk matter in the liquid state is now beginning to be simulated on large, fast computers. One limit on the application of quantum chemistry to problems in chemistry, physics, and the life and atmospheric sciences, is the size and speed of the computer available. No university currently has on its campus the most powerful computer extant.

The NSF-supported Study, generated by the Committee on Computers in

Chemistry of the National Research Council, was undertaken following a series of events culminating in a two-day Conference on Computational Support for Theoretical Chemistry held in May, 1970. That NSF-supported Conference involved over forty scientists from academia, government, and industry, who were selected carefully such that all the important aspects of the question could be addressed by a representative group of manageable size. The results of that Conference were much more significant than hand-raising surveys taken at theoretical chemistry conferences convened for other purposes. Nevertheless it became clear that, while a strong case had been made for better coordination of computer and human resources, there remained important questions that needed detailed study by quantum chemists working together with knowledgeable individuals in other areas of chemical as well as in related disciplines such as computer and communication technology. Indeed, the question raised in that Conference transcended the field of chemistry and dealt with the field of scientific computing generally. The Conference Report, together with an NSF rephrasing and amplification of basic questions regarding computing incorporated in the Report, were distributed widely by the National Research Council-National Academy of Sciences.

The year long Study, which was recommended by the May, 1970 Conference, is currently in progress. It involves nine different study groups, each concerned with some aspect of the following:

I. Scientific Objectives
   Quantum Mechanics and Quantum Chemistry; Inorganic Chemistry, Organic Chemistry, and Spectroscopy; Solid State and Surface Chemistry; Statistical Mechanics and Macromolecules; Structural Studies; Molecular Dynamics and Scattering; and Atmospheric Science

II. Characterization of Computational Facilities

III. Administrative and Financial Structure and Policy

The Scientific Objectives are discipline-oriented and of direct interest to chemists and to those in sister disciplines. The computer/communication/management/political questions being addressed in the study, and which are of broader interest, may be summarized as follows:

Proposed functions: What would the laboratory do and what would it not do?

How would it interact with the scientific community?

What are the alternative general patterns of operation and of administration?

Can agreement be reached on the scope of the proposed facility, and general constraints to be put upon it?

What is the state of computer networks? What role might they play in extending the usefulness of a central laboratory?

Is there unutilized time at existing computer centers and, if so, how much is suitable for large-scale problems.

What are problems in making such time available for sophisticated computation? What about access to computers more powerful than those on university campuses? What about the role of the commercial sector?

How would scientific policy be determined?

What would be the nature of the staff?

What are prospective sources of financing?

The Study Report is scheduled for completion by October, 1972. Interested parties should contact the Division of Chemistry and Chemical Technology, NRC-NAS, 2101 Constitution Avenue, Washington, D.C. 20418.

NATIONAL BUREAU FOR ECONOMIC RESEARCH

Mark Eisner described the NBER Computer Research Center which was established in February, 1971, to develop and disseminate software to meet the needs of researchers in quantitative economics, management science, and related fields. It is currently supported by a two-year, $1.9 million grant from the National Science Foundation. New software tools are provided in the context of a remote, commercially operated, computer system using state-of-the-art methodology, such as virtual memories, interactive usage, and reentrant software. New applications are geared toward areas where research has advanced beyond present computer software. Current projects include work on mixed integer math programming systems, various areas of statistical data analysis and in applying econometric estimator techniques to systems of equations.

The Center is an outgrowth of the five-year experience of the TROLL project of MIT, both in approach and in personnel. The TROLL project produced a large computer system (TROLL) which provided on-line research for applied econometrics. TROLL was designed to provide the user with all of the facilities needed to produce a complete "laboratory" for his research. During the TROLL project it became clear that much of the effort in software development was focused on providing support capabilities rather than actually implementing techniques. Of 100,000 lines of high level language code, over 80% is concerned with such support activities as management facilities and error-handling.

This support structure, inherited from the TROLL project, actually comprises an integrated application operating system, which is now available for the software developed at the Center. Because of this support, the implementation of new software tools can be done at relatively low cost. Relating to this, the Center will begin a limited examination of prospects in the development of application support systems. Specifically, we are implementing an Application Control Language and System which will formalize and mechanize the introduction of new tasks into the present system environment.

In effect, the Application Control System is an operating system in its own right, but it is being designed to run under the control of both the OS and CP operating systems for IBM 360/70. This means that the software developed at the Center can be distributed to a large number of installations. However, the Center does plan on using an academic and research communication network as an important, if not primary, means of dissemination. There were several reasons for this decision. Among them that the size and versatility of the system lends itself to large installations; and that an active user community, closely tied via a shared interactive computer network, eases the burdens of maintenance and enhancement of software.

In summary, the NBER Computer Research Center provides an innovative thrust in many areas of computer systems, application software, and research-oriented development:

1. It is a discipline-oriented center, combining an excellent research staff in economics and management science with highly skilled system programmers.

2. It emphasizes the need for a broad range of support software geared to the needs of a particular discipline.

3. The development of software is designed for large, interactive systems which in conjunction with a communication network, could create a new research community, sharing research activities on a logical not local basis.

THE NIH COMPUTER UTILITY

Richard Feldman selected the chemical area in order to bring out some of the problems that the NIH research community faces. The chemistry community at NIH is fragmented into institutes and laboratories. Small-scale machines are attached to instruments and gather data. That information is sent to the campus computer utility by physically transporting tape or by telecommunication.

The Computer Center, Division of Computer Research and Technology (DCRT), is responsible for designing, planning, implementing, and maintaining a large, general-purpose computer utility to most effectively meet

the dynamic and diverse requirements of both NIH research investigators and managers in the support of modern medicine. The heart of the computer utility is a large IBM 360/370 multi-processor system, operating in a multi-programming mode, providing batch processing as well as teleprocessing and graphics support to over 1600 scientists and data processing programmers. Operating on a 24-hour basis, the remotely located terminal computers submit 500 jobs a day to the utility via teleprocessing while an additional 200 jobs are submitted locally and 350 remote conversational typewriter terminals (IBM 2741's, CRT's, and Teletype keyboards) are active for over 1300 interactive sessions and submit another 1500 jobs daily. Since the Computer Center receives no direct appropriation, all work is processed on a fee-for-service, cost-recovery basis.

The multi-processor system, valued at over $25 million, consists of one DEC PDP-10 computer and an IBM 370/165, one IBM 360/65 and one IBM 360/50 CPU with a combined total of over six million bytes of directly addressable core. The peripheral complex consists of 53 160KC tape drives, 128 30-million byte disk drives, twelve 1100 lines-per-minute printers, four 1000 cards-per-minute readers, four analog-to-digital channels, paper tape reader and punch, a 2250 and a 340 graphics display terminal, an AGT-30 graphic computer, an optical page reader and telecommunications capacity for 20 high-speed lines to remote computers and 220 low-speed lines for conversational terminals.

The 3500 daily jobs are submitted to the Computer Center in three classes (small, medium, and large), with respective turnaround times of less than one hour, two hours, and overnight. The jobs are programmed in FORTRAN, ALGOL, COBOL, PL/1, Assembly Language, and WATFOR with the help of three interactive systems, CPS, AID (JOSS), BASIC, WYLBUR, and a time-sharing service.

Work has been going on to establish a chemical information system, and interactive sub-structure searching of chemical files is now possible. Work is underway toward linking mass spectrum search and literature search to the Chemical Abstract (CAS) Registry number associated with each structure. Consideration is being given to implementing CAS structure registry file which contains approximately two million compounds When this file is implemented, the proposed National Science (Computer) Network might be an ideal mechanism for increasing the utilization of such unique information systems.

THE NIH-BIOMEDICAL COMPUTING PROGRAM

Michael Oxman pointed out that the NIH specialized research resource facility program is separate both financially and administratively from the Computer Utility at NIH.

Ten years ago a concerted effort was launched by the National Institutes of Health to meet what was genuine, but, perhaps not fully recognized need within the biomedical research community, for computer technology. At that

time the Biotechnology Resources Program was initiated to establish and support the operation of Computer Centers in non-profit institutions engaged in health-related research.

Currently, he went on to say, we are supporting 33 Centers, at a cost of 7 to 8 million dollars per year each designed to meet the needs of some defined community of scientists.

A Biotechnology Resource is responsible for providing services; engaging in collaborative efforts between resource core scientists and members of the user community who are unsophisticated in the use of the technology; core research and development to enhance further the usefulness of computer technology in biomedical research; and training in the technology for both future technologists and biomedical scientists.

Although each Center serves some defined community of scientists, usually the only common thread among users is their dedication to solve health-related problems. Consequently, it is necessary for each Center to provide a broad range of services. The emphasis is placed upon meeting the needs of the maximum number of scientists most effectively. It is clear, however, that each Center cannot be all things to all people. In fact, there is a tendency for each to take on a character of its own and to graduate to some level of specialization such as the application of small computers to biomedical problems, interactive graphics, or statistical computing. Certainly many factors come to bear, but the most important probably are the interests of Center staff and the policies of the host institution.

With increasing pressure being placed on our program by the biomedical research community for support of computing activities at a time when Federal funding has leveled out, we feel that every effort must be made to get the most out of what we now have. The most likely approach is through resource sharing.

Although some interaction between Centers exists within our program at this time, a more formal approach is being explored so that the full power of all Biotechnology Computing Resources can be brought to bear on our national health problems. Within a biomedical computing network it would be possible to channel each user's job to the most suitable facility. The end result, of course, would be cheaper and faster computing and more effective utilization of our resources.

Although a great deal of planning and numerous preliminary studies are necessary before a formal network can be developed, certainly the required technology is available. Perhaps the greatest initial challenges facing us are the sociological problems associated with resource sharing and the political and administrative problems that develop when different institutions engage in mutual activities.

Discussion Period

Warren Seider of the University of Pennsylvania Computing Center is chairman of the CACHE Committee (Computer Applications in Chemical

Engineering Education) that has 17 members at different universities and has been working for three years trying to make cooperative use of discipline-oriented programs for students to use on a wide scale. He expressed disappointment that so little had been done with networks. Looking ahead to networks, he has been encouraged by ARPA and NSF activities. He asked whether anybody has considered the development of programs on a single computer to support 150 schools, 100 students per school?

In reply, Lykos described efforts of the NSF's Computer Innovation in Education section, through which some 30 regional computer network projects have been supported involving 10% of the nation's colleges and universities starting in 1968. These projects employ the mechanism of a central institution working with institutions within a radius of a couple of hundred miles. The projects have included faculty training and curriculum development and have resulted in a sharper definition of the problem.

Lykos went on to describe the NSF funding of CONDUIT (five universities forming a separate non-profit organization to be engaged in classroom work and testing). It was also pointed out that regional networks are a part of NSF/OCA's planned trial National Science (Computer) Network. However, there appears to be very little financial support available for the coming fiscal year.

The question was also asked whether it is the responsibility of the disciplines to foster research on computing and pointed out the plight of smaller disciplines in doing this. Peter Lykos replied that development and dissemination of curriculum material is being handled in a direct way as suggested in the RAND study headed by Roger Levien on computers in education. A working example is the case of Wilbur Pillsbury at Knox College, Galesburg, Illinois, using small programs developed on a stand-alone mini-computer, in FORTRAN and batch processing mode, being used in over 200 institutions running on 10 different computers, and distributed by a publisher as part of course material in computer augmented accounting.

Martin Greenberger, Johns Hopkins University, stated a general question area not yet addressed – the relative merits of forming a discipline-oriented center as opposed to a more pluralistic approach. He stated that, whichever the approach, it is going to be important to have strong, discipline-based development. The specific question addressed was to Eisner: If the network were available would he be ready to make use of it and could he serve users?

Eisner answered that user support is now one of the current features of the NBER Computer Research Center. He emphasized that one-third of the budget and personnel are involved in documentation and to supply maintenance. There would not be trouble in supporting a medium-sized community, say 2000. Users numbering 4,000 to 10,000 couldn't be handled. This judgment is based on experience with commercial time-sharing services. The thrust of the NBER Center is that it tremendously cuts down maintenance costs. The center is trying to develop maintenance and documentation techniques.

Greenberger asked Eisner for identification by name and present

activities of the real users of the NBER Center today. Eisner said that he didn't have this information available. The use by the National Bureau itself is heavy. Northeastern University has a small community of users. The TROLL system has been used in five courses this past semester as laboratory assistance. There are 12 active users at MIT who are building models ranging from political science to physical sciences. The main modeling thrust is in economics and management science. There is also the Federal Reserve model on system – the Lester Thoreau model.

The Center is ready to be part of a network now, Eisner went on to say. Greenberger asked if the NBER Center is near service that could be cost/effective by an amount a user would be willing to pay. Eisner replied that the Center buys computer services in big blocks of CPU time, with no connect charges, at one-third the price MIT charges. This is quite competitive with local computer costs.

Lykos pointed out that a clear distinction should be made between the thrust of the NBER Center as a remote-computer user research center, which it is, and a computer utility which it is not.

Harold King of the Urban Institute, Washington, D.C., inquired of Feldman whether access to the Institute's data bank was available to the general public and how, speaking for a non-profit institution that had to work with Federal agencies, the data would be made available to non-government users. Feldman acknowledged that this is a problem currently under study at NIH and he doesn't know how it will be resolved.

Ron Becker, University of Maryland, made the following two comments: (1) When we talk about discipline-oriented centers vis-a-vis networks we must distinguish between single- and multi-purpose centers. (2) The technology of networks is far ahead of network usage. He suggested that people with potential user communities try to put together proposals to link needs to networks. This should be tried over the ARPA network. The existence, for example, of six viable specific proposals would help speed the solutions to some of the political problems involved in network usage. Warren commented that this has already been done. Lykos noted that several projects have been funded by NSF/OCA involving use of networks to enhance the doing of research.

Gregg Mark, University of Michigan. Institute for Social Research. addressed the following question to Lykos: In planning for a national laboratory for computation in chemistry, what kind of structure is foreseen to keep the Center moving ahead for a 5-10-15-20 year period to serve all factors of chemistry research and allowing for growth and change? Lykos replied that the proposed National Lab dealt with only a portion of chemistry but that this is the principal concern of the study underway. May 5-6 will be the first coming-together of all the study groups involved. He asked T. W. Hildebrandt of the National Center for Atmospheric Research to comment as that discipline-oriented center was already operational with its large-scale computing facility.

T. W. Hildebrandt, described the work of NCAR, which was set up to do

research in the atmospheric sciences. They have a large computing facility. Work is underway on large-scale problems such as improving forecasting and the time over which numerical forecasts can be useful. The computing facility is a necessary tool of the Center and it has a mandate to make its computing facilities available to academic atmospheric scientists. The question is how to allow development to take place. The Center is open to the atmospheric sciences community as a whole. Modeling work of a wide range is possible.

The Center provides FORTRAN. The computer uses a simple operating system, which takes a small amount of total resources and does not require large overhead. The computing facility is able to provide superlative and quick service. It has not experimented with remote access.

Gerald Rudeman, NBER, commented that there should not be only one computing center for atmospheric research. NSF should fund many computer centers to operate competitively.

James McKenney, Harvard University, said that the concept for the discipline-oriented center is fuzzy. Biomedical research ranges from genetics to electrical engineering. Is the discipline to be more exactly defined? Lykos answered that time will develop what services are to be offered. There will be centers which will serve groups of people with common discipline-embedded algorithmic interests. There is on the other hand the concept of the ARPA net with the huge fast ILLIAC IV and the Trillion bit store as a focus which will bridge disciplines.

T. W. Hildebrandt asked how people can get access to a Federal computer. NSF has supported separate organizations to do this. It would be possible for NIH to do the same if they wanted to. Lykos commented that NSF makes grants for innovative research, not to sustain ongoing efforts. However, the NSF could get into the networking business if it followed the precedent offered by its support of NCAR. He asked why was NCAR not in the ARPA net. Hildebrandt replied that NCAR is not on this network but may be in several years. The ARPA net distribution does not serve the atmospheric sciences community well geographically. Most of our users, he went on to say, would have to go through the 2400 baud telephone lines anyway. This would be as expensive as direct access to NCAR. It is far more effective and far cheaper for scientists to travel by air to NCAR and stay a week than to use remote access. Lykos pointed out that there are really two distinct aspects of NCAR's computer-based work that should be distinguished here - the availability of information in machineable and/or on-line form, and the availability of computer power. Hildebrandt noted, for example, that one of the principal facilities of NCAR that will be of interest to the research community in the future is the Global Circulation Model. University researchers would ask the Model their own questions. At the moment this Model could not be operated remotely.

McKenney commented in closing that he understands that NIH is making a constant contribution to computing while NSF's support has been decreasing. The session closed with the question: How are government agencies going to cooperate on networking?

6. *Libraries and Information Centers*

Chairman: **Frederick G. Kilgour**
Director, Ohio College Library Center

Henrietta D. Avram
Library of Congress

Donald J. Hummel
National Library of Medicine

James Carmon
University of Georgia

Recorder: Catherine Dunnagan
CONDUIT, Duke University

HENRIETTA D. AVRAM:

The MARC (Machine-Readable Cataloging) system of bibliographic records can be discussed in terms of pertinent network considerations such as the dissemination of information, geographical status, responsibility of involved parties and switching centers. The impetus for the development of the MARC system stems from the need for a central source of catalog information, the necessity for machine-readable records, the necessary generality of a format evolved from the library community at large and the resultant questions of overall concept and feasibility. In 1966 the Library of Congress began to implement the MARC system. Recommendations for international as well as national "shared" accumulations of English language materials evolved as the enterprise and interest grew. The MARC Weekly Service presently involves magnetic tape distribution for English bibliographic information, but the inclusion of other materials such as audio-visual material, films, etc., as well as an expansion of book information to include French, German, Portuguese, and Spanish language books is projected for the future.

MARC now has 64 national subscribers; less than the original 80. However, the existence of secondary and tertiary subscribers such as the Ohio College Library Center, Oklahoma Department of Libraries, the New England Library Network, general contractors and Canadian subnetworks. Georgia Tech, Columbia University, The University of Chicago, etc., compensates for this decr' se.

As of 1966 the Library of Congress undertook its "shared cataloging" project: the Library attempts to acquire one copy of every scholarly work in the world together with bibliographic descriptions from national bibliographies from other countries as a basis for recataloging here. The British patterned a MARC system on that of the Library of Congress, facilitating the contribution of British files to ours. MARC-type files have also been initiated in Japan, Norway, Denmark, Australia, and France. Information sharing has become international, with consequent proliferation and standardization of formats. The library community has benefited from the development and

adoption of a library character set. In addition, the national level benefits include: the concept of centralization, the specifications for machine-readable cards, and the evolution of a multi-purpose library record. From the MARC project, the library community has gained a maintained data base filling multi-purpose needs and, in terms of user effectiveness, less wasted time and duplication of effort. In addition, MARC has played a significant role in the standardization of bibliographic records implementing the concept of interchangeability.

DONALD J. HUMMEL:

The need for medical library services to cover particular subjects for the medical profession, especially research findings, became a recognized necessity after World War II. Since the development of national MEDLARS Centers, the number of inquiries processed outside regular medical libraries has increased five-fold. Regional centers disseminate important information maintaining currency of available medical literature. Such centers include one at Santa Monica developed by SDC which has holdings of 110,000 citations from English language journals, one called MEDLINE (MEDLARS on-line) which provides 1,100 journals on-line, and one involved with toxicology information, a growing service supported by HEW as a community-oriented service not necessarily limited to medicine. The pilot project for this last center used Mead Data Central to process a full text, free-format, on-line data base containing entries from a report on pesticides, from the EPA Health Abstracts and from the Toxistic Bibliography. To feasibly and effectively maintain the system, the NASA file management system RECON and STINS were selected and are being adapted to searching full free text. By June 1, 1972, the projected service will be offered through a contractor to the general public which will pay on the basis of usage while the National Medical Library will support maintenance, updating, etc. Billing procedures for this system and other NLM time-shared service systems have been a problem limiting the development of nation-wide linkage. Presently, linkage involves thirty-five cities concentrated on the east and west coasts, in the most populus areas. The Specific Information Service group has a commercial version of the system costing $35/hour. The STINS/RECON system presently handles five to eight questions in that time making the approximate cost per query less than $10.

JAMES CARMON:

The NSF-funded information service performed at the University of Georgia handles requests from twenty-seven state-supported schools (eleven junior colleges and sixteen four-year and graduate schools) and is designed to provide two main functions: the dissemination of information and the preservation of a computer-oriented network.

In 1968 the University of Georgia began purchasing and subscribing to machine-readable materials to establish a data base. The initial purpose of the data base was to provide the university community with no-cost information

and the outside interests with cost-effective service. Twelve to fifteen hundred users access the system through a contract at their institutions, usually the local institutional library, and receive either basic or retrospective search results through the mail.

System sharing is now operational with other national centers such as Lehigh, Atlanta, Cincinnati, and Pittsburgh. The University of Georgia predominantly services users at the graduate student level or above, thus encouraging undergraduates to use their own institutional libraries. Presently, 94% of users are from Georgia's state-supported schools. Because of the mailing process for supplying information, feedback on user satisfaction is limited although the volume of document delivery is an important measure of user activity. Even advertising of the system is predominantly by word of mouth. A small survey showed increased and more productive usage of library facilities by subscribers who felt less randomness than characterized their normal library efforts. More specialized, linked centers are projected for the future over the broad base of the involved schools, thus implementing material sharing at reasonable cost for any single node of the resultant network.

FREDERICK G. KILGOUR:

The Ohio College Library Center (OCLC) is a separate corporate entity within the Ohio academic community and provides fee-paying membership with computer-based library services. Currently the system has forty-nine members using approximately eighty terminals.

The resultant system is seen as a logical and circuitry based network where a 2400 baud multiple party, multiple line, synchronous transmission telephone network fans out to service the forty-nine member institutions. The system provides the user with access to a 300,000 record data base, much of which originated as MARC records produced at the Library of Congress. The service reflects a bi-directional profile where users receive as output catalog cards, many of which are produced from records already part of the file, and provide as input bibliographic records. Four indices to the data base are extant: (1) author-title, (2) title, (3) incomplete system of Library of Congress card numbers, and (4) OCLC record numbers. The OCLC system itself has several purposes: (1) make regional resources available, (2) decelerate the per student cost, (3) prevent duplication of document purchasing by making information on neighborhood holdings available, and (4) generate bibliographic information for ordering materials. Currently member libraries process on the system, approximately 2,000 titles per day, about 75.5% of which already have records in the system. The system facilitates catalog resource sharing and the generation of user-specified formatted cards from the original catalog record. Ultimately, the use of card catalogs will be completely replaced by such a computer-based cataloging system.

In terms of cost, computer-based cataloging takes about two years to be cost-effective but by then reduces significantly duplication of effort and

personnel requirements. Resistance to revision and reduction of library staff is the most severe obstacle to introduction of computer-based services. The compensation is the resultant technological advance and cost benefits.

GENERAL DISCUSSION:

The problem of ascertaining cost per search and justifying the expenditure by the organization involved brought out cost-determining factors such as type of processing (batch or on-line searching), size of data base, type and/or volume of retrievals, storage media, and local computer billing algorithms. Hummel estimated a $10 per search cost for processing MEDLAR disk. Carmon described his batch mode serviced tape stored data base as costing in the range of $5 to $14 per search, with the cost of off-line printing not contributing. Henrietta Avram could not give a cost estimate as the MARC system is converting to new storage methods. The chief advantage of automation is record retrieval on the basis of a series of related and/or nested specifications provided by the user. Volume of usage on bibliographic material was suggested as a criterion for on-line usage; primary and secondary files being proposed with only the first (high usage) being permanently mounted.

A question of compatibility of the various library data bases elicited the following indicators of compatibility: specification of ASCII code; full capability of inputting and regenerating MARC-type records at the host facility. Without cooperation in data base development, network expansion becomes an unfeasible and discouraging prospect.

7. *Hierarchical Computing*

Chairman: William H. Bossert
Professor of Applied Mathematics
Harvard University

Recorder: William G. Droms
George Washington University

The discussion section on hierarchical computing, chaired by William H. Bossert of Harvard, began with a presentation of alternate views of a hierarchical system and then developed into a broad consideration of the role of mini-computers in a National Science Network. Bossert identified four levels in a potential hierarchy. At the first level is the user interface, ranging from simple typewriter terminals through automated data acquisition devices to terminals, based on large-scale integrated circuit technology, which will provide sophisticated local editing and syntax checking. The second level belongs to the mini-computer, a low cost processor that might be dedicated to very special tasks or a single language due to its limited scale. A large, general purpose processor, for example a typical ARPA Network host comprises the third level, handling demands that are beyond the efficient range of activities of the mini-computer. The fourth and highest level is a large network which considered as an entity is both very powerful and very general.

Bossert's presentation then centered on the second and third levels of the hierarchy, their relationship to each other and to the network. Present work illustrates at least three views of the two levels. At Yale the mini-computer is proposed specifically for managing a number of user terminals, freeing the larger processor from a number of editing and bookkeeping duties. At Harvard the second level is proposed more powerful, providing services on an extensible programming language common to the third level, with a scheduler serving each demand for service on the second or third level in a dynamically efficient manner. To a great extent the ARPA Network removes the distinction between the two levels. By placing them on a similar footing with respect to the higher level, the Terminal IMP allows both to be network hosts in a sense. Arguments were presented for and against these alternate views.

Professor Badger of the University of Pittsburg, for example, expressed serious reservations about using a mini-computer for anything but input-output, feeling that an economy of scale still justified carrying out most calculations on a larger system. Several members of the group noted that as far as costs go, only the basic processor had any right to the label "mini." Peripherals for the small systems are usually as expensive as those of larger systems. Professor Spock of CUNY referred to the "incremental

bankrupting" association with mini-computers that start cheap but grow and grow. In consensus the group felt that care had to be exercised to keep the cost of the mini-computer consistent with its practical capability, but for many tasks it could be quite cost effective.

A review of appropriate tasks for the mini-computer returned time after time to its ability to efficiently handle complex communications, already demonstrated in the IMPs of the ARPA Network. Mr. Lindamood of the National Bureau of Standards pointed out that this aspect of the MINI was best exploited not by the linear hierarchy, but by a T configuration in which the MINI stands between the larger network host and IMP or other communications hardware. A branch would then extend from the MINI to the user interfaces. At this station the MINI could hold the network control program for the entire local hierarchy and relieve the larger processor of smaller user demands as possible.

Mr. McKay of IBM Research, whose installation is about to join the ARPA Network, felt that prior separation of function of different levels of the hierarchy was missing the point of networking and that sophisticated data and control management programs should be developed to allow total network utilization by individuals as required. Bossert agreed that the system should be considered as an entity and stated a hope that concepts of level in the hierarchy might be only a concern of hardware and software engineers and not of users.

In simplest terms hierarchical computing means meeting each computing demand in the most efficient way, balancing positive and negative economies of scale in hardware and software. The discussion group was cautious, distrustful of biased projections in a time of fiscal crisis for many colleges and universities, but cautiously optimistic that a hierarchical extension of smaller local computing facilities might provide a way to meet the demand for increasing amounts and variety of computing services.

8. *Government and Other non-University Networks*

Chairman: Edwin Istvan
Center for Computing Science
and Technology
National Bureau of Standards

Philip H. Enslow
Office of Telecommunications Policy
Executive Office of the President

Thomas N. Pyke
Center for Computer Sciences
and Technology
National Bureau of Standards

Stephen White
General Sciences Administration

George W. White
National Communications System

Recorder: Carolyn Landis
EDUCOM

The Chairman introduced the four government panelists, who each gave a brief review of relevant responsibilities and activities of his agency.

PANELIST COMMENTS

Col. Philip H. Enslow opened the presentation with a review of policy concerns of the Office of Telecommunications Policy regarding government operated networks The federal government operates many data communications networks which perform duplicate functions but also provide unique services for user agencies. The Department of Defense (DOD), the General Services Administration (GSA), and the Atomic Energy Commission (AEC) each use separate communications networks. The DOD Network includes several features for which the other agencies are not willing to pay. The Office of Telecommunications Policy is evaluating possible merger of some of the government operated nets, but has not yet developed a policy regarding merger, unification, or continued separation.

Mr. Thomas N. Pyke described National Bureau of Standards (NBS) concerns with teleprocessing. Since passage of the Brooks Bill in 1965, the NBS has had responsibility to oversee technical aspects of computing services needed and used by federal government agencies. The NBS offers advisory services to government agencies, provides a technical base from which to evaluate alternative technologies for networks, and develops performance criteria for systems. The Center for Computer Sciences and Technology operates a node on the ARPA Network for applied use and for purposes of

evaluation of the network. For the near term, Mr. Pyke predicted a need for interconnection of existing networks but thought one network for all government agencies impractical.

Mr. Stephen White explained that the General Services Administration (GSA) regulates procurement of automated data processing services for all government agencies. After technical specifications have been set by an agency, the GSA must clear all purchasing of data processing services whether obtained from in-house or outside sources. Message switching services are bought from outside sources. Remote batch processing service, supplemented with programming and analytical services, are available through a government run time-sharing service RAMUS (Remote-Access Multiple User System). Mr. White described a recently awarded contract for time-shared computing services on a national basis under which agencies could obtain services on demand, with payment being rendered only for services actually furnished.

Mr. George W. White discussed the National Communications System (NCS) established in 1963 by President John F. Kennedy to place under one management the various existing federal government telecommunications resources. Since 1966 NCS has been an independent office within the Department of Defense. The Director of the Defense Communications Agency acts as Director of NCS, reporting to the Secretary of Defense who is the NCS Executive Agent. Mr. G. White described some of the existing communications networks which form the NCS. The Automatic Digital Network (AUTODIN) of the Department of Defense and the GSA Advanced Record Service (ARS) are interconnected although each net serves different agencies. The National Aeronautics and Space Administration Network has separated low speed transmission of telegram type messages from high speed data transmission although the same lines and switches are used. He further explained that NCS in cooperation with NBS had recently submitted to the Office of Telecommunications Policy a proposal for establishing federal telecommunications standards. Common basic standards for telecommunications would greatly facilitate interconnection or unification of existing and proposed networks which would, in turn, provide cost effective service for the government especially in an emergency situation.

GROUP DISCUSSION – THE RELATIONSHIP OF GOVERNMENT NETWORKS TO UNIVERSITIES

Discussion centered around the question, "What is the potential for cooperation between the university community and the government through computer communications networks?" There are two levels on which universities and government agencies can cooperate using computer communications networks: (1) universities can access government data banks and other information resources or vice versa; and (2) university and government research personnel can cooperate in particular experiments utilizing special capabilities of individual systems and exchanging information and advice through the network.

Even large universities which have sophisticated computing systems could profit from access to government data banks. Many universities without advanced computing systems would like to take advantage of opportunities to purchase time-sharing and other data processing services from the GSA. However, at the present time the Federal Telecommunications Service (FTS) and other government networks are not generally used by university research personnel, even those working on federally supported projects, although such services could, in the latter case, be provided.

Future interfacing of federal and state computer communications systems may offer additional opportunities for cooperation between government and universities. The NCS has begun a study of federal and state interfacing but has not yet determined an optimum schedule or course of action.

The role of computer communications networks in the future distribution of information from resources such as Chemical Abstracts Services is uncertain. The Chemical Abstracts Service is now evaluating the interface between processing and using activities with C.A. tapes. The mode of future governmental and university access to these resources through networks will depend primarily on satisfactory determination of usage pricing and secondarily on determination of communications pricing.

While most university users will seek speed in response from a government or quasi-governmental computer communications network, instantaneous response is not always necessary. Often a day's delay is acceptable. Users will seek a variety of resources. Most members of the group discussion agreed that various groups of users should have potential access to a variety of data banks through a variety of networks. The needs of the user should be paramount in designing networks and cooperative arrangements for universities and government agencies. Network activities rather than the network technology must be the focus of network design if colleges and universities are to benefit.

SUMMARY

Mr. Edwin J. Istvan reviewed the basic points of concensus raised by the group as follows:

a. University users and other citizens should be able to take advantage of cheap distribution of knowledge through networks.
b. Needs of users will have to be identified in terms of the time limitations for response, the quality of transference, etc.
c. Network interconnections should be planned to utilize all available technology to meet the needs of the user.
d. Opportunities for cooperative research requiring access through networks to information services and data banks should be planned so as to benefit both government and university users.

9. *Research Uses of Networks*

Chairman: J. C. R. Licklider
Professor of Electrical Engineering
Massachusetts Institute of Technology

Thomas Marill
Computer Corporation of America

Steve Crocker
Advanced Research Projects Agency

Robert Metcalfe
Massachusetts Institute of Technology

Recorder; Samuel Kursh
George Washington University

To open the discussion, Robert Metcalfe began compiling a list of present research applications of the ARPA Computer Network. These included:

1. The experimental simulation of an air traffic control system by Bolt, Beranek & Newman.
2. Development of the climate model at Rand.
3. Communication among researchers through the Network Information Center at Stanford Research Institute.
4. Several research uses of the IBM 360/91 Computer at UCLA by projects requiring a larger computer than is available locally

Metcalfe's compilation was interupted by a brief description by Licklider of an application that Nat Rochester of IBM had told him about. Rochester and several colleagues in Cambridge are working jointly with a small group in Poughkeepsie on a design project. The members of this design team express their ideas and communicate with one another through files in a computer that is available to all of them. They append criticisms and suggestions to one another's files. This interaction through a "network" has cut the amount of travel required to maintain coordination within the project to approximately one half.

At this point, a fundamental question of research philosophy interjected itself into the discussion. Is it appropriate, now that a few computer networks actually exist, to stress them with demanding practical applications, or is it better to continue their development within a protective research community? The discussion of this question was, of course, not conclusive, but it appeared that there was considerable interest in getting on to practical, substantive applications.

One of the practical applications of the ARPA Network is the development and execution of climate models. Steve Crocker described briefly the work of the climate research group at Rand. They are developing and testing large-scale numeric models in the process of studying long-term changes in climate. They do most of this work in a large computer, remote from the Rand Corporation, from consoles at Rand. In the work, they (and

others engaged in climate and weather research) use a data base of meteorological information that is somewhat larger than 10^{11} (1/10 of a trillion) bits in size. It is planned that the data base will be stored in a new trillion-bit store that will be available through the ARPA Network. Access to the data will be managed by a "Datacomputer," which is under development by the Computer Corporation of America.

Thomas Marill, president of CCA, described the Datacomputer and the trillion-bit file which will be, essentially, a part of it. The Datacomputer will make it possible to access the file through the medium of a language, called "Datalanguage," a very small sample of which is:

> Output = observation with temperature > 120 degrees F and humidity > 90 percent and location New York or Philadelphia or Washington

Such a request would be made by a computer program operating in a network host computer. It would be made after the program had made proper connections with the Datacomputer, and it would result in a flow of formated data, meeting the retrieval prescription, to the program in the host computer. Dr. Marill indicated that there would probably be a Datacomputer in California and a Datacomputer in Massachusetts, both connected to the ARPA Network. These Datacomputers will offer marked economy of scale storing alphanumeric text for approximately the cost of a xerographic copy of it.

The usefulness of the network and the large stores of information associated with it was examined from the point of view of the behavioral and social sciences. Joe Markowitz said that, in those sciences, a "data explosion" is occurring. At one end of the data spectrum are such large files as the census data and the records of polls and surveys. At the other end are the personal data accumulated by behavioral and social scientists. Somewhere in the middle, it was observed, are the volumonous records of pecks by the pigeons in a few mechanized and computerized pigeon laboratories.

Peter Lykos indicated that NASA was likely to be one of the big accumulators of data. An earth-resources satellite will pick up 10^9 bits each time it orbits the earth, and that would fill up a Datacomputer in 1,000 cycles.

The economics of the Datacomputer came in for quite a big of discussion. As Dr. Marill indicated, the main point is that its storage is inexpensive precisely because it is so big. The first Datacomputer will cost several million dollars. But it will hold about a trillion bits. To make a rough comparison, consider a disk file that holds about a billion bits and costs about $50,000. The factor of 1,000 that takes a billion bits to a trillion bits takes $50,000 to 50 million dollars.

At this point, the Chairman tried to convey his feeling that we are at the beginning of a fantastic adventure in computer networks and data bases. Eventually, it will change the way we communicate with one another, the way we read, and the way we think. One relatively minor but perhaps early

part of the revolution will be "electronic mail": your secretary's typewriter will feed characters into the network, and they will come out into a file belonging to the addressee. It will be much less expensive to deliver the information than it is now to deliver the paper on which the information is recorded.

Bob Metcalfe got the discussion back to research uses of the network, briefly describing a program that is being initiated by a group of chemical engineers who intend to share their pool of programs in educational applications. This led into the concept of the network as a marketplace. Programs will be written not so much for immediate *ad hoc* applications as for use within the large "consumership" of network subscribers. Assurance of quality. documentation, consultation, and maintenance of programs will find an economic basis that will let them play their essential roles.

Returning to the concept of the network as a communications medium, Steve Crocker described some of the experiences of the people who cooperated in the development of the network control programs and the communications protocols. Much of the design and development work centered upon documents, called "Requests for Comments," that were written at consoles attached to the various hosts computers and then communicated to and distributed by the Network Information Center at Stanford Research Institute. Using the network as a communications aid in the development of the network made it possible to move through many iterations of design, each having the benefit of ideas from all the members of the distributed team, in a much shorter time then would otherwise have been required. The Chairman observed that there was a stronger team spirit in some of the geographically distributed groups, in the development of the ARPA Network, than is usually found within the collocated members of a conventional research laboratory. He speculated that an international network working group might have significant implications for cooperation across national boundaries.

Present networks require considerable sophistication on the part of users. The question was raised, How long will it take to make networks easy to use? There was no direct answer to that question, but the analogy with the problem of making computers, themselves, easy to use had a considerable point. It has taken quite a while, and they still require sophistication except in situations in which very strong constraints on the breadth of application are built into the program with which the user interacts. Steve Crocker indicated that efforts were currently underway to package the concepts of Doug Engelbart's Augmentation Research Center for widespread use.

The Chairman described a computer program called Mathlab, which provides assistance to applied mathematicians in solving mathematical problems, and he projected its use upon the network framework. Into Mathlab are built many capabilities for handling symbolic mathematical expressions. For example, Mathlab is quite good at solving difficult problems in symbolic integration. It is now practical for a few mathematicians to use Mathlab through the ARPA Network. In perhaps ten years, it should be

possible for many applied mathematicians, all over the United States or all over the world, to have the advantage of greatly augmented computer assistance in their work. Licklider noted that the impact of Mathlab, which is a very sophisticated program with much knowledge of mathematics packed into it, is obviously going to be greater than the impact of simple programs that let the computer do a little better what a desk calculator already does pretty well. It is important for programs to be easy to use, but it is more important for them to do something substantial, something that cannot be done almost as well (and perhaps less expensively) another way.

The network concept has already affected planning in several fields of science. Peter Lykos described briefly some of the thinking that has taken place in the fields of chemistry, language, and linguistics. Joe Markowitz described some of the ideas that are developing in the behavioral and social sciences. For several years, of course, there has been planning within the medical community, particularly at the Biomedical Communications Center. An important element in all of the thinking is the idea that some research problems require the use of tools which are prohibitively expensive to construct for a single application but which become economic when they can be used many times by many people.

The discussion ended with a brief sally into the field of computer graphics. The fields of computer graphics and computer networks interact strongly. First, although most computer systems do not offer very much in the way of graphic interaction, it may well be that truly widespread use of computers through networks will not come until graphs, charts, diagrams, and the like are readily available. Second, the communication lines of the network, being interposed between the central computer in which the processing programs operate and the local console on which the graphic display is posted, separates graphics processing into two parts, and the technical questions raised by the separation are by no means satisfactorily solved. Third, the transmission rates that characterize present networks are not sufficient for highly dynamic graphics (e.g., animation) or for realistic pictorial graphics. It will be possible to increase the transmission capabilities, but that will present economic problems until there is sufficient use of networks to keep wideband channels fully occupied.

10. *Commercial Networks and Time-Sharing Services*

Chairman: Carl Hammer
Director
Computer Sciences, UNIVAC

Julius Aronofsky
University Computing Company

Charles Fisher
Datran

Lynn Hopewell
Telcom Incorporated

David Jasper
Control Data Corporation

Lee Johnson
Comnet

Douglas B. McKay
IBM Research Center

Maurice Murphy
Control Data Corporation

Thomas O'Rourke
Tymshare

Bruce Whitener
Leasco

Recorder: John LeGates
EIN, EDUCOM

CHAIRMAN:

Our theme will be the relationship between commercial time-sharing services and national or regional networks, both existing and planned. We will discuss what is available, and what should be the university and college use. We will explore the benefits to schools of using commercial time-sharing as opposed to their own networks built at their own expense.

MR. O'ROURKE:

Tymshare currently has 18 XDS 940's and 3 PDP 10's connected to a network consisting of 40,000 miles of leased lines, transmitting at 4,800 and 2,400 baud. There are concentrators in 32 cities and local dial service in 55 cities. The network is tied together by 80 mini-computers, each a Varian 620. They provide service similar to the ARPA TIPS. They accept information from dialed-in terminals, and prepare packets for transmission to the proper computer with appropriate error codes.

Twelve of the computers are in California; two PDP 10's are in Buffalo; two 940's are in New Jersey; and there is an installation in Houston, Texas.

The software examines the user code and routes his work via the shortest

route to the computer he should be on. If the shortest physical route is unavailable, the network supervisor will select the shortest available alternate route.

The supervisor is a sophisticated piece of software residing in four different 940's, three in California and one in New Jersey. Only one is active at any one time, with the others standing by to provide backup network control.

In addition to providing service for our own users, we have also begun to accept outside computers into the network. The National Library of Medicine in Washington, D.C. has a 370/175 with a large medical data base. This is accessed from across the country by users who dial a Tymshare number and are routed by the supervisor to the NLM machine. SDC in Los Angeles went on the network last week on the same basis. A time-sharing company in Houston called "Computer Complex" is also using their own computer on the net.

Our basic business remains the selling of time-sharing services. We entered the network operation in order not to maintain machines in cities all over the country. To insure a low error rate (10^{-6}), we developed a net of mini-computers which talk to one another, and allow each machine on the net to access every other machine.

Some of the applications are rather interesting. A large electronics firm deposits inventories and orders on a disc file, and these are in turn accessed from offices at other locations.

The emphasis has gone away from engineering/scientific applications and heavily towards business applications of an analytical nature, such as forecasting and distribution analysis. Many of our customers are students of ten years ago who learned about computers in business school and have now advanced into positions of executive authority.

MR. JASPER:

CYBERNET is primarily a remote batch system, although time-sharing services are available. We first got into the business in the middle sixties, and the net was announced in 1968. The net is message (packet) switched.

Its goal is load-leveling ability and backup. Consequently, we have made all systems very similar. This has been achieved, but has been found not to be marketable. The abilities to backup files and to access special resources are, of course, not available and there is no incentive to go from one city to another. The nodes have therefore been withdrawn from the network.

There is now a hierarchical structure under development with time-sharing systems front-ending the batch systems. It is hoped that this will achieve a uniformity of access for time-sharing and remote batch users with communality of access language and files. This is marketable.

It is expected that in the future the cluster concept will be implemented, with several main frames accessing the same files. Up to four series 6000 computers may use the same data base. This provides not only load leveling and backup, but also national data bases. There will be multiple clusters.

The remote batch community consists of perhaps 200,000 persons, whereas the time-sharing community is possibly double that number. A conversational front-end renders the computer available to every consumer, and I believe that this will be the future of service networks.

MR. WHITENER:

The RESPONSE Network is based primarily on two computers; an IBM model 360/65 located in Bethesda, Maryland; and a totally unrelated system based on a Hewlett Packard 2116B with Control Data discs a d some other hardware from other manufacturers.

The 360/65 services approximately 200 users in about 20 cities across the United States. The prime market intended for the 360 is the Call-360 service bureau users. There has been an evolution towards the more business oriented user rather than the strictly interactive user. For this person, reliability is the watchword: he will not tolerate down time or lost files.

We have provided a large number of matrix switchers. Although there are 200 users, there are many more access points throughout the network, and very few busy signals. The network offers 10, 15, or 30 characters per second transmission. It also permits access to a mini-computer system offering only FORTRAN and serving 16 users. Most of our data bank. users are on this system because of its large files and its economics.

MR. ARONOFSKY:

I will try to wear two hats for this presentation, one as a representative of University Computing Company, and the other as a professor from Southern Methodist University, considering the use of the computer for classroom work.

UCC offers the services of some 55 computers in three categories. There are 8 Univac 1108's, North, South, East, and West in pairs, not coupled together. There are twin 370/165's that are coupled together in a duplex manner. Jobs are routed to each machine depending on the work load. Printers, tapes, and discs are scheduled in a highly automated way. Call-360 time-sharing service is included on these machines.

The principal type of service used is Remote Job Entry. Many customers maintain files on the tapes or discs and access them via RJE.

There is a time-sharing service on the 1108's called "Fastback" which was designed by UCC and has only a modest amount of business. It involves a data file on a PDP-9 interfaced to the 1108, where the operating system has a roll-in/roll-out feature about every half a second. It is used primarily for the manipulation of data files, which is done conversationally.

In order to engage in this business, UCC has designed some terminals, which run the gamut from key-operated devices to card readers of up to several hundred cards per minute with line printers attached. These use modems up to 50,000 bits per second for remote job entry. In many cases they have replaced medium sized IBM model 360/40 and /50 systems.

From the point-of-view of a professor, there is an intense need for more time-sharing in the classroom where a content course is being taught. Commercial firms have superb collections of software packages. The great bulk of work can be done via RJE and much of it on time-sharing. It will be a While, however, before universities are performing large-scale data base manipulation.

MR. JOHNSON:

Comnet is located in Washington, and serves the Government as its principal client. There is no extensive network per se. The system is basically an IBM 360/65. Rather than attempt to reach the scientific market, we compete in the IBM marketplace. We found three minor problems with IBM gear: one was the software, another was communications capability, and the third was the cost per byte of memory. The system which we use is a 360/67 with 500K bytes of core, and a 2 million byte AMPEX LCS interleaf memory acting as an extension of core with a cycle time of 1.25 microseconds. We also have our own communications front-end. The system is 100% compatible with OS. The front-end does all of the code conversion, speed conversion, polling of the network, buffering, building of files, editing, and formatting of data. It sends the job over to the processor where there is a job-stream manager, which allows you to start your problem at any time in the next 24 hours. You pay the appropriate price for the kind of response that you want. We use PDM equipment in other cities to handle the communications multiplexing, etc. We allow the user to work on a terminal of his own selection. Thirty-four different types can be used via our front-end. We do automatic speed detection, allowing the use of only one phone number. We are interfaced with the GSA Advanced Record System (ARS) Network. Many of our customers come from overseas on the AUTODIN Network, enter the ARS Network and then enter our system. We offer RJE service up to 4,800 baud, however less than one percent of our business is of this type. The rest is time-sharing. Much of it involves data base usage, as is being done for example by the Environmental Protection Agency.

Our first priorities are these: reliability of the total system, flexibility, and cost performance. We are operating a Simplex system now in its third year. Reliability is 99.2% for the total network.

Because of unreliability of the scientific market. we concentrate instead on data base applications, business applications, and commercial production operations. Many of our customers are using us to first develop a system, and second for production.

We are looking forward to seeing what Datran can offer in communication. Our front-end can go from its present rate of 110 baud to about 230kb.

MR. FISHER:

Datran filed with the FCC three years ago to set up an alternate public communications utility, nation-wide, running from Boston to Atlanta,

Chicago to Dallas and on to San Francisco; covering 35 major cities. The route was based on the density of data processing equipment rather than schools. The intent is to compete with the Bell System; to sell something better and cheaper than they do. We will offer higher bit rates, quicker connect times, lower charges per time connected and a lower increment of connect time. On Datran the minimum charge will be for a tenth of a minute. Error rates will be 10^{-7} as opposed to the 10^{-5} offered by Bell, and availability will be 99.8%.

The competition may cause Bell to cut their rates and billing time. It may change the structure of the location of computers by offering rates whose relations to distance is different from that currently available. We will use a "postal rate" system. It may then be more efficient to operate a single large computer than several smaller ones.

We have done heavy simulation of traffic, including both long holding time (RJE) and short holding time (credit check) customers. We can accommodate customers by refusing new customers until the net can handle them. We ascertain in advance the ability to serve our customers, and don't plan to admit them until we can.

MR. McKAY:

IBM involvement with networks is not heavy. The service bureau of IBM has its own network, which is set up to provide service to customers coming in through local offices.

There is a TSS experimental network going on at the research center where TSS users can log themselves onto a remote TSS system through their local TSS system. They can transfer files from and to their local system. This is being done as an experiment and is not heavily used. The major traffic is from Carnegie to Yorktown, and then to the 91.

The other work is in the research network. It involves the problems of heterogeneous netting. We started in 1969, by allowing users to talk to the net as though it was a simple system, or a large multiprocessor system. The net was under control of a network manager. It has the capability of shifting files, initiating jobs on remote systems and synchronizing various jobs through the central facility. In our effort to get users, we ran into obstacles. Several users were put off, for example, by legal rights involving proprietary funding.

Because of the paucity of real users we have approached the subject differently. We are studying the control and matching of users and resources and the sharing of heterogeneous data bases.

The data sharing problem itself is very complex. We are currently studying three levels of the problem. First is the machine dependent nature of the data. Second is the logical restructuring of files. The user should not have to concern himself with the location of the original file. Third is what we shall call semantic discrepancies. Files may have different keywords, code representations, etc. We are currently concentrating on these fundamental building blocks, which are necessary to better network design.

Networks should also be transparent to users. We are working on a machine independent network control language, allowing the user to globally specify what he wants to do and then map this into a physical machine.

These ideas will be tried out on the ARPA Network. Data sharing will be tried out on a large medical data base currently available to us.

MR. HOPEWELL:

Our company is purely a consulting firm – we don't supply any time-sharing or network services. We advise clients on whether to buy front-ends, and how to configure their networks. Our most successful work is done with clients who are just getting into teleprocessing from a batch environment. We do optimum network designs and planning of teleprocessing.

The most fascinating thing to me is to try to predict the future of these businesses, based on technical and business trends. The first thing to note is that the hardware cost of digital equipment is plummetting. On the other hand, it is not clear what is going to happen with common carrier tariffs. Any firm which depends for its viability on knowledge of carrier costs in the future is a risky business. Typically, networks have a substantial part of their costs in telecommunications.

There has been a considerable thinning of the field in the last few years. Business has shifted to those applications where there can be some economies of scale. Questions can be raised as to what is happening to economies of scale in computing. There is a trend to own one's own computer. This is also becoming cheaper to do. Those who need enormous power will find networks very appealing. Others will follow the trend of engineering applications, who are more and more acquiring their own machines.

DISCUSSION

CHAIRMAN: Is it realistic to talk of "thousands and thousands of customers"?

PANELISTS: (without exception) Yes. They cover the range from enormous (federal government, Shell Oil) to small firms (consulting firms) to individuals: often with many users per customer.

DR. McKENNEY (Harvard Business School): We are spending $400,000 annually on outside computing. Communications constitute about $100,000 of this. This percentage is too high to be economical, and we will be probably looking to other means.

DR. GREENBERGER (The Johns Hopkins University): Are you moving away from a "marketing" approach? What is your technology and at what stage is its development?

MR. FISHER: We have a new president with an engineering rather than a marketing background, but our approach will remain marketing oriented. We will adapt to customer needs.

We will try to amortize our hardware fast enough to replace it with new technology. The basic difference between Datran and past carriers is that we are using time division multiplexing rather than frequency division multiplexing. The phone company changes the frequency of the conversations and stacks them up on a coaxial cable. The cost of the components to handle that work is not dropping as fast as digital equipment. We put 20 million bits per second on our microwave backbone by using computer techniques to sort them out. This has been a great cost breakthrough, and it is being done on technology of which the cost is plummetting. We are committed to all digital transmission.

We are well along in the design of the software that controls the switching and gives the features such as abbreviated dialing, privacy, charging, fast response time (99% within 3 seconds), and so forth. The switch itself is in the prototype stage. Most of the other equipment is off the shelf. Putting it all together in this combination, which has never been done before, will begin in about a year.

MR. EISNER (NBER): Will charge be by time, or by bit rate? If the former, will this be hard on time-sharing?

MR. FISHER: Time-sharing customers will probably use the phone company. Our charge will be by time. If time-sharing companies put on data concentrators, they may be able to use us effectively.

QUESTION FOR O'ROURKE (name not recorded): How big does a customer have to be to get on the Tymshare Network, and what kind of service can he get?

MR. O'ROURKE: Our charge is independent of distance. We do not let other customers on the net without a long painful negotiation. We don't want to lose our competitive edge by making our service available to our competitors.

MR. KING (Urban Institute); Both Bell and Western Union have indicated an intention to compete in the digital data market. They feel that they will be compelled, however, to take all customers while Datran can take only the most profitable ones.

If the FCC requires you also to take all customers, what effect will that have on your plans?

MR. FISHER: It must be pointed out that Bell also takes profitable customers, as can be seen by their proposed picturephone and data transmission service locations. The FCC will allow them to charge their data service by cost instead of averaging. It may also be that the FCC will some-

day require us to serve nonprofitable routes also. At this time we are not in a position to make predictions.

MR. ARONOFSKY: There are two other reasons to believe that Datran might succeed against these giants. One is that they have never marketed responsively to the computer industry, and the industry will look eagerly to someone who will. The other is that small companies can be much more alert than the larger companies.

DR. GREENBERGER: There are two ways to compete with AT&T. One is by better technology. The other is by building your own network to carry your own traffic; it is being done by the commercial time-sharing companies. It would seem that Datran has opted exclusively for the first.

MR. FISHER: That's true. Our market surveys tell us that there is a greater market for the circuit switched service than for the store and forward message switched service. Two independent surveys showed this.

DR. GREENBERGER: It seems inefficient for each time-sharing company to develop its own network, when perhaps the phone company could do it once and for all. However, one of the problems with the phone company has been its persistant refusal to change its circuit switching technology to better match the needs of the computer users.

CHAIRMAN: I would like to ask each panelist to leave us with one lasting thought on the subject: what should the educational community be looking at now and in the next two to five years?

MR. ARONOFSKY: Universities should take the possibility seriously that commercial time-sharing firms can offer valuable service and economies of scale.

MR. JOHNSON: Universities will not be able to agree among themselves on what type of system they should have. Therefore they will have to go outside for network services.

MR. JASPER: The academic community is a research and development resource, not a production resource. It can contribute valuably in the man/machine interface and human aspect areas.

MR. McKAY: Universities should study applications and how to use resource-sharing facilities. They must examine what to do with them.

MR. WHITENER: Universities should provide service to their students which is easy to use.

MR. HOPEWELL: Agreed: students need to know what a computer can do.

MR. FISHER: Take heart, things are going to get better.

MR. O'ROURKE: There will be a deluge of large systems, and sharing of centers.

11. *Implications of Networks for Computer Centers*

Chairman: Benjamin Mittman
Director, Vogelback Computing Center
Northwestern University

Paul Oliver
UNIVAC Division of Sperry Rand

Leland H. Williams
Triangle Universities Computation Center

David Nyman
Illinois State Board of Higher Education

Recorder: John Faris
George Washington University

The purpose of this discussion was to bring together computing center directors and others who potentially would be affected by networks and to discuss the implications of networks for the individual computing centers. Mr. Mittman pointed out that other panels were considering the links which make up networks. This panel, however, would be more concerned with the nodes, that is, with the individual computing centers. As was stated in the session abstract, the implications for computing centers span a range of problems from enormously expanded operations to virtual extinction.

In introducing the panel, Mr. Mittman outlined a number of questions. Only a few of these were answered by the panel members or during the discussion which followed. It was clear, however, from the discussion, that these types of questions must be considered by the universities as they look at the impact of networks on their operations. The questions posed by Mr. Mittman were:

Will the campus computing center disappear?

Is the current model of an all-purpose academic/research/data processing center viable in a network environment?

What functions will disappear? What functions will grow?

What do state officials think will happen to the centers at public institutions? What should happen to them?

What have been the experiences of the current network users?

What should center directors do when their faculty come to them to

request access to a network or to some other center with larger or faster or cheaper equipment and services?

Is there a free and competitive marketplace? Should there be?

What are the components of today's network environment? of tomorrow's?

How does one determine the economics of joining a network?

Can centers really get together in a joint venture?

Are we able to evolve from general purpose computing centers to discipline-oriented centers if this were to become necessary?

Summarized below are the presentations which the panel members made in answering some of these questions. Following these presentations will be a brief summary of the discussion which followed the prepared presentations.

IMPLICATIONS OF NETWORKS FOR COMPUTING CENTERS

Dr. Paul Oliver suggested that the implications of networks for computer centers can be classified as technical, including processor configuration, software, and communications; financial, dealing with the nature, size and distribution of monetary support; and managerial, which includes the source and distribution of authority and responsibility in the network management, as well as the nature of the services provided.

It would perhaps be fair, and fruitful, to substitute the word "problems" for "implications," since those implications which do not represent problems have been discussed and written about ad nauseum. Surely we are all aware by now of the economic advantages of large-scale computers, the prestige accruing to a large network, the attraction such an organization has for technical personnel (in an educational environment, for faculty and students as well), and of the increased sources of outside income. The last point is a particularly important motivating factor. Having acknowledged these benefits, let us consider some of the difficulties facing the computer center management in an educational computer network.

The technical problems are perhaps the easiest to deal with since their solution is often determined by the existing financial and managerial situation. Nevertheless, certain technical decisions must still be made. One is the organization of the network. A distributed network, in which all the nodes are connected either directly or indirectly through intermediate nodes and shared links, offers significant advantages in terms of flexibility and reliability. The ARPA, CYBERNET, and IBM TSS networks are examples of this type of organization. A centralized network, in which each user node

connects to a central node, is, on the other hand, more economical and requires less, and less complex, software. A second question is that of network composition. The technical support problems facing a center director are far fewer in a homogeneous network, where all the processors are similar, than in a heterogeneous one. The Triangle Universities Computing Center (TUCC) is an example of a centralized, homogeneous network. Regardless of organization and composition, the center director will be faced with the difficult problem of operating system support. This is true for the manager of a "central" node as well as for the manager of a "satellite" node, however these terms are defined. The difficulty is caused by the fact that standard operating systems, as provided by manufacturers, are not usually adept at supporting a network, and therefore require "local" enhancements.

The major financial problem is that of deciding the degree of support which the network as a whole derives from its nodes, or members. If the support is equal, some mechanism must be available to insure that usage is also nearly equal. If the support is not equal, then one is faced with the question of control – how long will a node with "fewer votes" than the others be content with the situation. This problem is particularly crucial, of course, when the satellite node has complete responsibility for the contentedness of its users. The experience at TUCC indicates that this problem, as well as that of billing policy differentials among the nodes, is solvable, at least to date. Nevertheless, different circumstances could prove less amenable to solution.

The technical problems which face the computer center director of a network node are more than balanced off by the benefits derived. These include not only computing power but increased capability for different types of computing which are possible given the larger memories, more secondary storage devices, and more powerful operating systems available on large machines. The financial implications are likewise favorable to a network environment. This is evidenced by a large number of educational computer networks benefitting from outside (usually, government) support.

In contrast to the technical and financial implications, Dr. Oliver finds the managerial implications of a computer network to be almost completely negative. He is concerned primarily with a centralized-type network, in which the node members are both owners and users of the central node, and themselves possess a substantial computing capability.

The director of a small center, which depends largely on a large center for services, will have difficulty attracting and motivating the local staff. The quality of service provided local users will be largely out of his control. The decoupling of the large center (or central node) from the users presents a problem which manifests itself in a variety of ways: ignorance on the part of local users of the central facility's services; lack of emotional attachment to the local facility; ignorance of, or slow response to, user needs on the part of the central facility. The director of the central facility is usually also faced with the problem of fragmented authority and responsibility. Finally, a member of an educational network providing research and administrative

computing support as well must somehow reconcile the differing needs and priorities of these classes of users, in an environment of fragmented control. Various attempts have been made to solve these problems. Dr. Oliver stated that his own experience as past director of the University of North Carolina Computation Center, a TUCC user and owner, leaves him somewhat cynical regarding the feasibility of satisfactory solutions in a situation of de-centralized management.

Finally, Dr. Oliver stated that he did not want to close on a negative note. The advantages of computer networks cited earlier are real and significant. Although most large computer networks are still in their infancy (CDC's CYBERNET, the Lawrence Radiation Laboratory's "Octopus," and TUCC are exceptions, each being fully operational, and one (TUCC) having educational services as its principal product), results to date indicate the advantages offered by these should, given proper concern for their management peculiarities, substantially outweigh whatever problems exist.

TRIANGLE UNIVERSITIES COMPUTATION CENTER

Dr. Leland Williams discussed the success of TUCC as a network supplying three major universities with computational capability. The Triangle Universities Computation Center was established in 1965 as a non-profit corporation by three major universities in North Carolina: Duke University, The University of North Carolina at Chapel Hill, and North Carolina State University at Raleigh.

The primary motivation was economic: to give each of the institutions access to more computing power at lower cost than they could provide individually. TUCC received initial grants from NSF and from the North Carolina Board of Science and Technology. It was established in Research Triangle Park, which is geographically, as well as politically, neutral territory with respect to all three of the campuses. This was an important decision.

TUCC supports educational, research, and (to a lesser, but growing extent) administrative computing requirements at these universities, and also at 42 smaller institutions in the state and several research laboratories by means of multi-speed communications and computer terminal facilities. TUCC operates a 2-megabyte, telecommunications-oriented IBM 370/165 using OS/360-MVT/HASP and supporting a wide variety of terminals. For high speed communications, there is a 360/75 at Chapel Hill and there are 360/40's at North Carolina State and Duke. The three campus computer centers are truly and completely autonomous. They view TUCC as simply a pipeline through which they get massive additional computing power to service their users.

The present budget of the center is about $1.5 million. The Model 165 became operational on September 1, 1971 replacing a saturated, maximum efficiency 360/75 which was running a peak of 4200 jobs/day. The minimum version of the model 165 costs only about 10% more than the Model 75 and it is expected to do about twice as much computing. So far they have reached

5400 jobs/day without strain. Thus, the economy of scale continues to exist and to be usable at this level.

The recent installation of the old TUCC Model 75 at UNC has been erroneously interpreted by some as a signal that TUCC is breaking up. This is definitely not the case. UNC has renewed a biennial agreement, with its partners, calling essentially for continued equal sharing in the use of and payment for TUCC computing resources. Such equality is possible in the network precisely because each campus is free to supplement as required at home. The UNC Model 75 is a very stripped version of the TUCC Model 75. The UNC Model 75 has become the biggest computer terminal in the world.

TUCC is successful not only because of the technical capabilities of its staff, but also because of the careful attention given to administrative protection of the interests of the three founding universities and of the North Carolina Educational Computing Service (NCECS) schools. At the policy-making level this protection is afforded by a Board of Directors appointed by the Chancellors of the three universities. Typically each university allocates its representatives to include (1) its business interests, (2) its computer science instructional interests, and (3) its other computer user interests. The University Computation Center Directors sit with the Board whether or not they are members as do the Director of NCECS and the President of TUCC.

At the operational level there are two important groups, both normally meeting each month. The Campus Computation Center Director's meeting includes the indicated people plus the Director of NCECS and the President, the Systems Manager, and the Assistant to the Director of TUCC. The Systems Programmers meeting includes representatives of the three universities, NCECS and TUCC. In addition, of course, each of the universities has the usual campus computing committees.

Allocation of resources is determined by a scheduling algorithm which insures that each major category of users has access to its daily share (pre-determined by negotiation based on several factors) of TUCC computing resources. The algorithm provides an effective trade-off for each category between computing time and turn-around time; that is, at any given time the lowest using category will have job selection preference.

TUCC continues to provide cost-effective general computing service for its users. Some improvements which can be foreseen include:

1. A wider variety of interactive services to be made available by TSO.
2. An increased service both for instructional and administrative computing for the other institutions of higher education in North Carolina.
3. Additional economies for some of the three universities through increasing TUCC support of their administrative data processing requirements.
4. Development of the network into a multiple source-node network by means of a symmetric Hasp-to-Hasp software developed at TUCC.
5. Provision (using Hasp-to-Hasp) for medium speed terminals, to

function as message concentrators for low speed terminals, thus minimizing communication costs.

6. Use of multiplexors to reduce communication costs.
7. Extension of terminal service to a wider variety of data rates.

THE ILLINOIS BOARD OF HIGHER EDUCATION PLAN

Mr. David Nyman discussed the proposed Illinois Public Interest Corporation for Computer Resources. The Illinois Board of Higher Education first became involved in the development of a state-wide plan for computer resources during 1969. This activity was the result of the knowledge that the resources necessary to provide for the demands of higher education were becoming increasingly limited; yet there had been a national average annual increase in expenditures on computing activities in higher education of 42% from FY63 to FY68. Little knowledge existed about the Illinois situation since no review process of these expenditures existed for the colleges and universities. Since that time it has been determined that computing expenditures in Illinois experienced a compound annual growth rate of 33% for the period 1965 through 1970. While the average annual compound rate of increase in computer expenditures dropped to 19% in the period FY70 to FY72, the Board of Higher Education does not believe the problem of expansion is over because:

1. Application of computers in the instructional process during the sixties was nowhere near what it should be.
2. Administrative systems are not responsive to user needs.
3. Private institutions and, to a great extent, public junior colleges have not experienced growth rates comparable to the public universities.

With the expectation that State appropriations to higher education will probably not exceed the inflationary rate during the seventies, the Board of Higher Education in Illinois was interested in attempting to better apply the computer resources through consolidation. Thus, they sought a new form of organization for the control and application of these resources. Such a consolidation model was selected on the basis of the following criteria:

1. The alternative form must not be precedent setting – it must be based on currently existing technology that has been demonstrated to work.
2. The alternative must have the longrun capability and capacity to effectively provide for both current and future higher education computing needs.
3. The alternative must minimize both the longrun cost of computing per student and the longrun risk of failure.
4. The alternative must demonstrate transitional feasibility between the current and future mode of operation with a high probability of success.
5. The alternative must enhance the long-range quality of instruction.

The only form of organization that appeared to satisfy all these criteria

was a public interest, not-for-profit corporation which would:

1. Own staff and operate a network of computer equipment in higher education.
2. Provide the processing services necessary to satisfy higher education's demands.
3. Ascertain the administrative and instructional systems which are capable of central development and assume the responsibility for that development.

Such a form has been presented to the Board of Higher Education and the institutions in the State, and progress is currently being made to evaluate the recommendation with possible implementation during FY73.

The economics of cooperative use of computer resources can be clearly demonstrated. For example, our analysis indicates that computer cost per terminal hour usage is driven to a minimum somewhere in the neighborhood of a 350 to 400 interactive terminal network. This is too large a network for any of the Illinois universities to individually afford. But in spite of these economic advantages, most computer center staff and many users in Illinois have protested moves toward centralization or cooperative efforts.

Most users express concern over the resulting level of service of cooperative efforts. There appear to be two reasons for this:

1. Most networks have developed as a research tool.
2. Networks attract a large number of competitive users.

Typically, networks developed for research purposes are unstable; the hardware and software change frequently, priority is given to development rather than user requirements for production, and because utilization is low while there is on-going investment in hardware and software, they are typically expensive to operate.

The implication for Illinois that we have drawn from these observations is that to be a success, the corporation will have to be production oriented. This means that there will probably have to be an influx of management talent to direct operation of any cooperative services offered by the corporation. Further, it may benefit cooperative development to have the center removed from the pressures of any existing campus center.

It has been recommended that the corporation's first priority for implementation should be an interactive instructional computing network. Of the kinds of service supplied cooperatively, the one most consistently supplied regionally, both commercially and by educational institutions, is interactive terminal service. Thus, it fits into the production framework desired. Secondly, such an implementation would increase the capability in Illinois since typically, the institutions are batch oriented. Thus, it does not provide a "threat" to existing centers and users. Finally, there are models to study with regard to current and past efforts at faculty training with regard to remote computing.

Because of the normal start-up difficulties experienced by any new

service, it has also been recommended that the public universities be a "captive" customer of the corporation when securing interactive processing capabilities for the first two years of operation. By having the corporation establish and publish rates for service, it is expected that the private institutions and public junior colleges will be provided with the economic information which will aid them in making a decision on whether or not to subscribe to the service. It is expected, however, that improved service at equal or lower costs will have to be demonstrated at the public universities prior to the development of widespread participation from the private institutions and junior colleges.

What relationship does this have to the role of existing computer centers in relationship to networks – the subject of this panel? Certainly, we are saying that in Illinois, there is room for both. But local campus centers cannot be all things to all users. We are recommending the establishment of a state-wide network to provide those services that the local computer center cannot economically achieve.

But, further down the road, when the economics are established, we see the possibility of a student batch system, general computing capability, and perhaps, administrative processing. Therefore, it is of utmost importance that the corporate form be established such that:

1. The mechanism for the development priorities is user oriented.
2. The opportunity is there for all segments of higher education to participate in the policy-making decision and implementation design.

CONCLUSION

The discussion which followed the prepared presentations left many of the original questions unanswered. It appeared that not many people in the audience feared the disappearance of the university computing center as it is constituted today.

There was general agreement that some centers, which would move from providing general purpose computing to supporting a terminal to a network, would find it difficult to retain qualified systems programmers. It was pointed out, however, that expertise would have to be transferred from systems programming to applications programming and consulting.

There was not sufficient experience yet with large, distributed networks to assess the impact of these networks on the computing center. Most of the facilities that are on the ARPANET are, at the present time, suppliers of services, rather than customers for such services. No one in the audience had had experience with using the ARPANET; therefore, no comments were available from that group.

Although it would seem clear that there would be some implications of networks on computing centers, the computing center directors who attended seemed surprisingly unconcerned about the future of their centers in this new environment. Perhaps they thought they would be suppliers of service, and thus would find themselves with expanded responsibilities rather than being converted to terminals to a large network.

12. *Computing for Smaller Colleges*

Chairman: **Paul T. Mielke**
Mathematics Department
Wabash College

Wayne Broshar
Ripon College

Ralph M. Deal
Kalamazoo College

James Warden
Wabash College

Robert L. Wilson
Ohio Wesleyan University

Recorder: Peter Bidinger
University of Maryland

Dr. Mielke opened the discussion with the observation that the colleges represented by the four panelists had a total enrollment of fewer than 5600 students during this spring term. All are undergraduate liberal arts colleges with relatively modest research programs, their main emphasis being on teaching. Computing budgets are low relative to those of large universities, but all four colleges own or lease computers, and their accumulated computing experience totals 30 years.

Each of the panelists then gave a brief history of computing on his campus and a summary of the current situation there. Following is a summary of current hardware and activities at the schools.

Ripon College enrolls 1000 students. A PDP 8/I was purchased for $100,000. The college borrowed the money from itself. Annual cost of the computer operation is $20,000, which includes amortization and maintenance but no salaries. There are nine local terminals plus four terminals to high schools within a 30 mile radius. There is essentially no professional staff, only one administrator and four part-time student assistants. Educational (75%) and administrative (25%) use are both time-shared. Average connect time is 50-60 hours per day. Total educational connect time last year was 8400 hours at an average cost of $15,000/8400 = $1.80 per hour. Staff costs are ignored here, because they would probably be the same for a remote job entry system using a network.

The computer is operational 168 hours per week. The most restricted terminals are available noon to midnight seven days a week. The information science classes and all first semester mathematics and science classes use the computer. Psychology majors are required to take the course in information science. It is estimated that 30% of all students use the computer. There are no hard figures on actual usage, since the code words for logging on are common knowledge. Faculty and students perform maintenance.

Wabash College enrolls 730 students. A PDP 11/20 was purchased through a gift of $100,000. Annual cost of operation is $16,000 including wages of several student assistants but not of the part-time administrator nor

of the full-time operator. The system is dedicated exclusively to student and faculty use, including student records. The college's accounting is done on a leased IBM Systems 3 computer. This is a matter of policy rather than need for extra computing power. All PDP 11 use is time-shared except that noon to 1 p.m. each weekday is reserved for student recordkeeping.

The computer is operational 168 hours per week, the most restricted terminals being available 8 a.m. to midnight. There is one telephone port which is used mostly by the President, the Admissions Office, and the local high school. The Admissions Office uses the computer for recordkeeping, and it also uses its terminal, which is portable, on recruiting trips.

There is one course in computer languages with a current enrollment of 80. About 60% of academic computer time is used by the social sciences and about 20% by the hard sciences. There are no exact figures on total student-faculty use.

Ohio Wesleyan University enrolls 2500 students. A leased IBM 1130 is used for academic computing and IBM 1401 for administrative data processing. Annual operating cost of $33,000 for the academic computer includes rental, maintenance, supplies, and provision for student assistants. In addition one staff member is released for one-seventh of his time to supervise the academic computing. The 1130 has three disc drives, an on-line plotter, and a fast printer. The monitor has been modified to permit operation of large jobs with interrupt for batching, thus permitting short turn-around time for the average student job. Computer usage is approaching saturation. In one recent 12 day period (288 hours) the CPU was actually occupied for 216 hours. Last year 50,000 academic jobs were processed.

There is a computer science track in the mathematics curriculum. Many departments require students to take computer science courses. The school continues programs to interest the faculty. For instance, under a COSIP grant there will be a 6 week program for 16 faculty members this summer. The system and the program at Wesleyan seem to be stable for the next couple years.

Kalamazoo College enrolls 900 students out of 1350 in residence at any given time. A purchased 1620/II is used for both academic and administrative computing. Also, there are several terminals connected to a PDP 10 at Western Michigan University in Kalamazoo (no line charges). These are used solely for academic computing. No figures were given on costs or staffing, but Kalamazoo College has just hired a Ph.D. computer scientist, reflecting an interest in computer science as a legitimate academic discipline within the liberal arts.

One computer science course is now taught each term. It is taught on the so-called Keller Plan using 40 units of material. Each student, together with an adviser, selects a course of from 10 to 20 units to fit his needs. He then proceeds at his own pace, mastery of each unit being the criterion for advancement and the grade in the course being based upon the number of units mastered.

Kalamazoo College is considering the purchase or rental of new equipment.

The panelists believed in giving very high priority to academic use of computing by faculty and students and attempting to have a very high percentage of students using the computer. Success could be achieved both by time-sharing and batch methods. In schools that had had both, the students preferred the interactive nature of time-sharing. It was felt that administrative work could be done efficiently in a time-shared mode with academic computing. There have been no security problems in this so far.

Dr. Broshar expressed the opinion that there should be one time-sharing console per 100 users of the system, and also that a terminal is too busy to meet user demands if it is in use more than 75% of the time.

The panelists found that mini-computers do not restrict most students or faculty. Large computing power is not needed for most uses. Also, national or regional networks are not economically feasible for many small colleges because geographical distances raise line costs to prohibitive levels. Unless total costs are less than $1.80 per connect hour, colleges like Ripon are simply not interested, since their needs are being met adequately at this figure.

Mr. Roderick Ricard of the University of New Hampshire observed that New Hampshire's geography permitted efficient service of smaller schools by the University. He related the University's plans for serving two medium-sized state schools and 8 smaller colleges. He described a policy of resource diffusion whereby the smaller colleges would obtain computer service from the two medium-sized schools where possible and from the University otherwise. At the present time both administrative and academic computing share time, with priority going to academic computing. He reported no security problems. The member colleges pay only for time used. The opinion was voiced that this would have the effect of discouraging student use. None of the colleges represented have charge for time. Ricard demurred, arguing that this did not seem to be the case with the New Hampshire system.

It was also claimed that large systems are backed up by sophisticated programs and large data banks that are not available to small computers. Warden, argued otherwise, remarking on the availability of the most sophisticated programs from Dartmouth College to Wabash College. Most programs used at Wabash College were not written there. It was admitted, however, that large systems and networks do offer a variety of languages and system packages such as IBM's STATPAC and Dartmouth's IMPRESS that do require raw power. The small colleges know this and take an attitude of watchful waiting. As computing volume grows, line costs may decrease, making networks economically feasible for them. In the meantime, their experience proves that on-site mini-computers provide adequate power at nominal cost, and they invest control where it is preferred by the college.

13. *Instructional Uses of the Computer*

Chairman: Charles J. Mosmann
Consultant
Corona Del Mar, California

Kenneth J. Stetten
MITRE Corporation

Duncan N. Hansen
Florida State University

Recorder: William Burns
University of Maryland

The first presentation was made by Dr. Hansen, who discussed some current activities in Computer-Assisted Instruction (CAI) and Computer-Managed Instruction (CMI) associated with the CAI Center at Florida State. Mr. Stetten next presented some facts about the TICCIT (Time-Shared, Interactive, Computer-Controlled, Information Television) System developed by MITRE Corporation. Dr. Mosmann then outlined some of the ideas contained in the Rand study on instructional uses of the computer for the Carnegie Commission, directed by Dr. Roger Levien, who was originally scheduled to be chairman of this discussion.

FLORIDA STATE UNIVERSITY CAI

At Florida State University, according to Dr. Hansen, the CAI installation consists of a network of mini-computers with associated terminals and other peripheral hardware. FSU has full control over the operation of these machines as well as the applications programs that run on the system. The network is being used for authors' development of their own CAI materials and testing them, using a relatively small number of students; it is also used for construction of problem sets for students use in exam preparation.

Standing problems seem to be more in the area of communications than in the network itself; among these, Dr. Hansen mentioned: (a) the difficulty of critiquing CAI materials by other authors, especially at other institutions; (b) the transferral of a finished product to a larger machine for use by a large number of students. A particular problem exists in the collection and logging of student data. (c) the difficulty of comparing the performances of students when they are from different institutions; and (d) a communications link to the CDC 6400 at Florida State University.

Another system described by Dr. Hansen is an Air Force project, more in the realm of computer-managed instruction than CAI. The system, in use at Lowrey Air Force Base, is used by some 3000 students for an Air Force

Technical Training course. Approximately $3.5 million was invested in the hardware used by this system. The special software includes two important elements: dynamic programming to provide the optimum media for each student and to monitor and assign types of simulators and media devices; and linear regression to provide analysis of group and individual performance data. The basic problems that the developers have had to face are those associated with giving simultaneous requests and managing the large data base inherent to the system.

TICCIT

Mr. Stetten presented some facts and figures on the TICCIT system currently under development at the MITRE Corporation in McLean, Virginia. Two types of computers are involved: a NOVA mini-computer with 16K of core as the terminal computer; and a larger computer with 32K of 16-bit core as the central computer. The system includes 20 color video cassette recorders and 20 computer-generated audio systems. The displays are color TV sets, and the data base, currently consisting of 22 credit hours (approximately 200 running hours) resides on two 2314 disk packs. The course materials ("courseware") is being written at Brigham Young University and the University of Texas under the general supervision of Dr. Victor Bunderson. Proposed or existing courseware includes materials for freshman English and mathematics, and remedial materials for these subjects. Further information on TICCIT was left to the discussion after the formal presentations.

RAND STUDY OF CAI AND CMI

Dr. Mosmann reported on several aspects of the study of computers for instruction in which he participated with Dr. Roger Levien.

He suggested that several techniques for the creation of instructional materials were possible: teachers write their own; a national center distributes machine-independent materials; regional computer centers manage the distribution of software with the associated computing resources, etc. The success of each of these alternatives is closely linked with the way in which computing power is made available – locally, regionally, and nationally – and with the incentives built into the institutions to encourage the production of materials and the comparison of alternative materials by potential users.

It is reasonable to expect that the organization of computing services will make computing available to more people, and that good materials will emerge as the system grows.

DISCUSSION

Much of the discussion centered around specific aspects of the TICCIT

system; the following represents a synopsis of Mr. Stetten's answers to several questions directed to him.

In order to use the system cost-effectively and to make it available to more students, more courseware must be made available. The system will not try to do exhaustive diagnosis, but will instead try to function as an "intelligent browser." The idea of the student forming a *contract* with the computer regarding his course grade is an example. Software and courseware will be made available to other users after the system is complete and tested. Final packaging and distribution will be done by a private concern, with royalties to go to the National Science Foundation, which is sponsoring the research. The major current problems are in programming and in the author language, currently under development.

14. *Networks for Medical and Health Science*

Chairman: Harold Wooster, M.D.
Chief, Research and Development
Lister Hill National Center
for Biomedical Communications
National Library of Medicine

William Glenn, M.D.
Health Services and Mental
Health Administration

Jonathan King
National Institutes of Health

Davis McCarn
National Library of Medicine

Keith W. Sehnert, M.D.
Society for Computer Medicine

Recorder: Terry Medlin
University of Maryland

LISTER HILL CENTER BIOMEDICAL DATA SERVICE

Dr. Wooster opened the discussion by describing the Lister Hill Center's Biomedical Data Service, which will be a network of three computer centers joined into an on-line time-sharing system offering CAI resources to the user community. The three participants are:

1. Massachusetts General Hospital under the leadership of Dr. Octo Barnett.
2. University of Illinois under Dr. William Havless.
3. Ohio State University, under Dr. James Griesen.

The University of Illinois module offers CASE, a patient study (simulation) program, and CRIB, a 4500 question, interactive, self-evaluation program aimed at medical student tutorial use. The Ohio State College of Medicine effort has, in part, been oriented toward a prototype educational experiment in which 30 medical students, under the guidance of one full-time faculty advisor, are receiving their medical education via CAI methods in toto. Massachusetts General Hospital offers a variety of shorter programs in patient simulations.

Experience gained in planning the aforementioned network indicates that the following requirements should be met by an operational user:

1. The user must make an attempt to integrate the CAI programs into the existing curriculum.
2. The user must integrally interface with at least one of the three resource bases and contribute to its growth and usefulness.

MEDLINE

Mr. Davis McCarn, Deputy Director, Lister Hill National Center for Biomedical Communications, National Library of Medicine, presented the historical background of MEDLINE which is an on-line bibliographic search system.

Development of MEDLINE began in 1967 and expanded from the technology used by SDC for the on-line system of their AN FSQ/32. Initial efforts used the entire data base of the NLM but considerations for search efficiency, for inexpensive access, for user satisfaction, and for greater interactive capability forced several alterations to the initial implementation. The problem of search efficiency was basically solved by analysis of the algorithms used and subsequent reprogramming of system modules incorporating the knowledge gained thus far. Access time was reduced by redesigning the data base and including only the most frequently used journals and articles. For the latter effort, the *Abridged Index Medicus* proved to be of great value.

The initial communication resource was handled by TWX (teletype) due to the pre-existence of user terminals compatible with the TWX system. This was later regarded as a mistake due to the higher per unit message cost (as compared to normal voice grade telephone lines). Thus this aspect was upgraded by utilizing the Data Com System (offered by Western Union). The basic aim here was to reduce the user communication cost. Greater flexibility and still lower rates were achieved by using facilities offered by Tymshare, Inc. These facilities were in the form of data concentrators existing in 35 or so major locations around the country. These locations expanded the system's accessibility and the data concentrators allowed more users since each concentrator could handle some 30 user terminals. The service expanded the type of available terminals to include any TWX peripheral, IBM 2741's, and ASCII peripherals since speeds up to 30 characters per second could be handled and speed/conversion problems were handled by the system.

The present configuration consists of some 96 terminals in some 77 institutions across the country. The data base consists of some 1100 journals and some 415,000 citations from *Index Medicus*. The conclusion at this point is that the system offers a needed capability to hospitals and other health care facilities which allows, in most instances, retrieval of relevant information in real-time comparable to the time requirements of patient care. Furthermore, the nation-wide orientation minimized communication costs and improved system accessability to the point that in December 1971 a 360/50 was replaced by a 370/175 to allow greater processing power.

NIH SUPPORTED COMPUTER RESOURCE CENTERS

Mr. Jonathan King, replacing Dr. William Raub, represented the Biotechnology Resources Branch, Division of Research Resources, National

Institutes of Health. Mr. King's presentation was oriented toward computer resource sharing for biomedical research.

The Biotechnology Resources Branch (BRB) of the Division of Research Resources, National Institutes of Health, supports computer resource centers at academic and other non-profit institutions whose purpose is to develop and sustain sophisticated computer capabilities useful to biomedical researchers. These centers are characterized by four component activities: (1) provision of resource services to the associated biomedical community; (2) engaging in research collaboration with selected members of the user community; (3) pursuing technological innovation designed to upgrade the capabilities of the resource; and (4) training biomedical scientists in the appreciation and use of the resource's technology.

The staff of BRB shares the belief of biomedical researchers active in the field that component activities of the computer resources would have greater impact if centers were able to share their capabilities with each other. This impact would be felt in a number of ways: (1) there could be an improved match between accessible computer capabilities and biomedical research problems; (2) the scientific staff of BRB-supported resources could assist a wider user community better if they could offer access to a wider range of capabilities; (3) research in the biosciences could do more to shape the future development of computer science along lines useful to it; (4) institutions currently lacking the resources to take full advantage of existing computer tools could be assisted to take fuller advantage of these capabilities; and (5) increased reliability of computer tools achieved through establishment of backup sources could stimulate the extension of biomedical computing into areas where there has been little development (because of that unreliability), such as clinical research.

Regardless of the state of technology, BRB seeks to make computer capabilities increasingly responsive to the needs of biomedical research, to extend the area of applicability of computers to biomedical research, and to encourage interaction between computer scientists and biomedical researchers. Sharing of resources appears to be the best step toward achieving these goals, and computer networks appear to be the most promising technological device for achieving resource sharing.

Assuming this to be so, one possible realization of a nation-wide system of shared biomedical computing resources would contain resources of various types: (1) "basic" resources, consisting of personnel and a hardware connection to the network of resources; (2) "moderately comprehensive" resources, possessing some local processing power in addition to the basic features; (3) "comprehensive" resources, possessing a substantial local processing power and serving as the backup utility for the capabilities developed at specialized resources; and (4) "specialized" resources, conducting research in a biomedically related computer specialty and closely linked to a medical school or other medical research institution. Personnel at all resources linked to a medical research center would serve a "problem switching" function, acting as the link between individual researchers and the

array of computer capabilities available locally or from other resources.

The next step in moving toward resource sharing is the development of long-term goals and principles of resource allocation and funding, accomplished in concert with our grantees and advisors. Possibly within Fiscal Year 1973, an experiment involving one or more current resources will be conducted to learn the value of and costs associated with "problem switching" and research functions of the shared resources we envision. With these steps, BRB hopes to obtain scientific justification of our belief in the value of resource sharing and clarification of the best way to proceed.

NETWORKS FOR HEALTH CARE DELIVERY

Dr. William Glenn, Health Care Technology Division, National Center for Health Services, Research and Development, Health Services and Mental Health Administration, outlined basically two applications for medical networks to the field of health care delivery: (1) Ambulatory Care Delivery and (2) Hospital Care Delivery (Hospital Information Systems).

He gave the following sites for Ambulatory Care Delivery: (1) Hospital Outpatient Clinics; (2) Health Maintenance Organizations; (3) Comprehensive Care and Extended Care Facilities; and (4) Large Private Practice Sector of multi-specialty groups, specialty groups, and solo practioners. The Hospital Care Delivery systems are implemented in private and university affiliated small, medium, and large hospitals which are located in rural, urban, and inner city areas.

The subsystems within each of the two applications present a better delineation of where medical networks are applicable to health care delivery.

The subsystems of Ambulatory Care Delivery consist of the following: (1) Medical Record; (2) Paramedic Support and Audit; (3) Provider Consultation/Education; (4) Patient Education; (5) Patient Data Acquisition; and (6) Administrative.

The Medical Record area forces a network to be able to handle multiple dimension data bases with a quality assurance of an appropriate degree. The Paramedic area brings in the need for an interactive protocol suitable for paramedic use and administrative auditing. The third area presents another facet to the interactive requirement, namely problem solving and/or guidance, e.g., acid-base advice. The fourth area presents a CAI requirement, e.g., programs to counsel diabetics and expectant mothers. The area of Patient Data Acquisition is oriented toward the Automated Medical History and the obvious patient/terminal interaction while the last area deals with such things as clinic scheduling utilization of resources, and quality assurance.

The subsystems of Hospital Care Delivery were perceived as: (1) Admissions and Census; (2) Pharmacy; (3) Radiology; (4) Clinical Laboratory; (5) Care-Unit Support; and (6) Administrative.

The first area deals with the basic statistics of the patient population and the resource utilization of the hospital. Pharmacy deals with the problem of drug interaction and the question of therapeutic value. Radiology expands

the network requirement to include X-ray analysis, maintaining a film library, and dosage determination.

The laboratory has heavy demands for on-line data acquisition, analysis, and storage with significant quality restraints. The fifth area includes the usage for patient monitoring, on-line EKG/EEG analysis, and pulmonary analysis. The final area deals with resource allocation and management as well as with the third party interface requirements.

Dr. Glenn cited the applications of the network approach to the problems of the rural practitioner. He described the MEDX program at Dartmouth where 23 paramedics were chosen to implement a health care system of a broad regional nature. It is essentially this type of topographic dispersion that seems to need the medical network approach. In this system concern is taken to allow for an interactive characteristic that maximizes the paramedic usefulness (minimizes his decision requirements) and allows a flexible auditing of the paraprofessional effort. Such a system forces technical and philosophical (practical) considerations relating to cost analysis, data collection (separate good from bad), remote entry of problem data, data selection (what data is pertinent?), and data usage (what part of the good data do you use?).

PRACTICAL ASPECTS OF NETWORK USE

Dr. Keith Sehnert, Secretary-Treasurer, Society for Computer Medicine, presented the very pragmatic aspects of using sophisticated computational devices to aid the medical process; namely that the yo-yo phenomenon of some computers and the inadequacy of existing lines and exchange networks (offered by various common carriers) to handle sustained data flows with necessary quality has hindered the acceptance of a potentially useful tool to the medical profession. He emphatically asserted his belief in the necessity of continually upgrading medical technology via the use of computers but, equally emphatically, warned of a naive approach in which one might not consider the practical problems to be encountered.

Dr. Sehnert described two existing medical record data networks: (1) TVA System for the State of Tennessee, based in Chattanooga, and (2) Papago Indian Reservation in Tucson covering approximately 300 square miles.

Using these as examples, Dr. Sehnert presented the real world practioner's requirements which would optimally allow a physician, to have 100% of a patient's medical data to use for decision-making. However, the mobility of our populace and the lack of centralized data bases forces the physician to use some 10-30% of the data which might be available in a medical network system of appropriate dimension. It is an obvious consequence that decisions based on less data are invalid more often than would be the case had more data been available.

From group discussion it was obvious that Dr. Sehnert's opinions were well received and totally agreed with, especially those regarding data flow

over telephone lines. Such pathological hindrances were objected to for reasons of cost, time loss in duplication of effort, and general frustration. The objection to high cost (or money lost due to system failure) was vehement enough to stimulate comments on the subject of expanding the paramedic philosophy so as to reduce requisite demands on the immediate use of technological innovations.

The final system discussed was presented by Dr. Harold Wooster. He described a 2-way duplex T.V. system implemented in New England where rural medicine is the rule rather than the exception. The existence of such a system to the rural practitioner partially removes problems of topographical dispersion. Furthermore, collaborative efforts are made possible so that physician interaction and consultation is no longer hindered. Thus, the removal of the isolation barrier can mean substantial improvements to the health care delivery process in such rural settings.

Supplements

FINAL ATTENDANCE LIST

EDUCOM SPRING CONFERENCE
Washington, D.C.
April 13, 1972

Marshall D. Abrams
Electronic Engineer
National Bureau of Standards, 650.02
Washington, D.C. 20234

Leonard Alberts
Temple University
1831 N. Broad Street
Philadelphia, Pennsylvania 19122

John R. Alexander, Jr.
881 Oak Drive
Crownsville, Maryland 21032

Urey W. Alexander
Assistant Business Manager
Dickinson School of Law
Carlisle, Pennsylvania 17013

John E. Alman
Director, Computing Center
Boston University
111 Cummington Street
Boston, Massachusetts 02215

Ernest J. Anastasio
Assistant Director
Data Analysis
Educational Testing Service
Princeton, New Jersey 08540

William J. Argersinger, Jr.
Dean, Research Administration
The University of Kansas
Lawrence, Kansas 66044

Julius Aronofsky, Manager
Corporate Development Planning
University Computing Company
Southern Methodist University
Dallas, Texas 75272

William F. Atchison, Director
Computer Science Center
University of Maryland
College Park, Maryland 20742

D. Donald Aufenkamp
Head, Computer Application and
Research Section
National Science Foundation
Washington, D.C. 20550

Eric M. Aupperle
MERIT Computer Network
University of Michigan
1037 North University Building
Ann Arbor, Michigan 48104

John E. Austin
Associate Director
Office for Information Technology
Harvard University
Cambridge, Massachusetts 02138

Henrietta D. Avram
Chief, MARC Development Office
Library of Congress
Washington, D.C. 20540

Charles Bacon
Systems Analyst
National Institutes of Health
Building 12, Room 2222
Bethesda, Maryland 20014

G. F. Badger, Jr.
Associate Director
Computer Center
University of Pittsburgh
Pittsburgh, Pennsylvania 15238

Ron Baecker
Computer Science Center
University of Maryland
College Park, Maryland 20742

Albert A. Barber
Assistant Vice Chancellor of
Research
University of California
Los Angeles, California 90024

William P. Barley
IBM
10041 Fernwood Road
Bethesda, Maryland 20014

John E. Barrows
Assistant to the Vice President
for Institutional Planning
University of Kentucky
Lexington, Kentucky 40506

Dan Bernitt
Pennsylvania State University
Computer Building
University Park, Pennsylvania 16802

Peter Bidinger
Research Assistant
Computer Science Center
University of Maryland
College Park, Maryland 20742

Thomas Blaskovics
509 F.T.A.
West Virginia University
Morgantown, West Virginia 26505

Ronald Blum
Director, CONDUIT
Department of Physics
Duke University
Durham, North Carolina 27706

Taveta K. Bogert
System Analyst and Research
Assistant
CBX Project
NBME/ABIM
3930 Chestnut Street
Philadelphia, Pennsylvania 19104

William H. Bossert
Professor of Applied Mathematics
Aiken Computation Center
Harvard University
Cambridge, Massachusetts 02138

Charles L. Bradshaw
Computer Center
Vanderbilt University
Nashville, Tennessee 37203

Al Bridegam
Vice President
Alpha Systems, Inc.
5315 Preston Road
Dallas, Texas 75205

Harold F. Bright
Provost
George Washington University
Washington, D.C. 20006

Wayne Broshar
Associate Professor of Physics
Ripon College
Ripon, Wisconsin 54971

E. P. Bucklen
Associate Director
Computing Center
Virginia Polytechnic Institute
and State University
Blacksburg, Virginia 24061

William J. Burns
Graduate Assistant
Computer Science Center
University of Maryland
College Park, Maryland 20742

Russell Burris, Director
Programmed Learning Center
University of Minnesota
Minneapolis, Minnesota 55455

W. Richard Burrows
Associate Director
Administrative Systems and
Computational Services
University of New Hampshire
Durham, New Hampshire 03824

James Carmon
Director
Computer Center
University of Georgia
Athens, Georgia 30601

Denis T. Carpio
Management Research Analyst
Management and Behavioral
Science Center
University of Pennsylvania
Philadelphia, Pennsylvania 19104

Dale K. Carrison
Director of Libraries
Mankato State College
Mankato, Minnesota 56001

Bruce Corruthers
Office of Telecommunications Policy
Office of the President
Washington, D.C. 20504

Henry Chauncey
President
EDUCOM
Princeton, New Jersey 08540

John A. Clark
Assistant Director of Computer
Planning and Information Systems
New Jersey Department of
Higher Education
225 West State Street
Trenton, New Jersey 08625

S. D. Conte
Purdue University
West Lafayette, Indiana 47907

Jack Cooper
Computer Center
University of South Carolina
Columbia, South Carolina 29208

John Cornelius
Manager, Computer Facilities
Chemical Department
University of California
San Diego
P. O. Box 109
LaJolla, California 92037

Benjamin Courtright
Department of Information
Systems Management
University of Maryland
College Park, Maryland 20742

Cynthia T. Crawford
DSR Staff
575 Technology Square 5th Floor
Cambridge, Massachusetts 02139

Stephen Crocker
R & D Program Manager
Advanced Research Projects Agency
1400 Wilson Boulevard
Arlington, Virginia 22212

John A. Curtis
DATRAN
1920 Aline Drive
Vienna, Virginia 22180

Ruth Davis, Director
Center for Computer Sciences
and Technology
National Bureau of Standards
Room A-200, Administration Building
Washington, D.C. 20234

Ralph M. Deal
Associate Professor
Department of Chemistry
Kalamazoo College
Kalamazoo, Michigan 49001

Arlan R. DeKock
Department of Computer Science
University of Missouri – Rolla
Rolla, Missouri 65401

Norma Jean Dininger
Programmer – Business Manager
Medical College of Ohio at Toledo
945 South Detroit
Toledo, Ohio 43614

William S. Dorn
Director of Computer Education
University of Denver
Denver, Colorado 80210

Hayes Dorr
Manager, Science Information
University City Science Center
3508 Science Center
Philadelphia, Pennsylvania 19104

William G. Droms
418 N. Armstaed Street
Apartment T-3
Alexandria, Virginia 22312

Catherine Dunnagan
CONDUIT, Department of Physics
Duke University
Durham, North Carolina 27706

R. T. Duquet
Coordinator of Computer Activities
Bowling Green State University
Bowling Green, Ohio 43403

Phil Dylhoff
Teleprocessing Manager
University of Iowa
Iowa City, Iowa 52240

D. W. Eastwood
Consultant, Lister Hill Center
National Library of Medicine
8600 Rockville Pike
Bethesda, Maryland 20014

Harry A. Eick
Professor of Chemistry
Michigan State University
East Lansing, Michigan 48823

Mark Eisner
National Bureau of
Economic Research
545 Technology Square
Cambridge, Massachusetts 02139

Philip H. Enslow, Jr.
Senior Staff Assistant
Office of Telecommunications Policy
Executive Office of the President
Washington, D.C. 20504

John H Esbin
Associate Director
University of Iowa
Computer Center
Iowa City, Iowa 52240

Donald J. Evans
Dean of Administrative Services
Prince George's Community College
301 Largo Road
Largo, Maryland 20870

Glyn T. Evans
Coordinator of Library Systems
Five Associated University
Libraries
106 Roney Lane
Syracuse, New York 13210

William L. Evans
Division Chief
Battelle Memorial Institute
505 King Avenue
Columbus, Ohio 43201

John Faris
115 Claybrook Drive
Silver Springs, Maryland 20902

Richard J. Feldmann
Computer Specialist
National Institutes of Health
Bethesda, Maryland 20014

Richard D. Ferguson
Harvard University
Cambridge, Massachusetts 02138

Wallace Feurzeig
Bolt, Beranek & Newman, Inc.
50 Moulton Street
Cambridge, Massachusetts 02138

Charles Fisher
DATRAN
1920 Aline Avenue
Vienna, Virginia 22180

Elizabeth Fong
National Bureau of Standards
Washington, D.C. 20234

A. G. Fraser
Technical Staff
Bell Telephone Labs, Inc.
Murray Hill, New Jersey 07974

David N. Freeman
Director of Computer Center (CCIS)
Rutgers University
New Brunswick, New Jersey 08903

John Garmat
Adj. Professor of EDP
Southeastern University
Washington, D.C. 20006

Barbara A. Gates
Assistant Librarian
Oberlin College Library
Oberlin, Ohio 44074

Robert J. Gettelfinger
Director, Computer Center
Educational Testing Service
Princeton, New Jersey 08540

Robert G. Gillespie
Director, Computer Center
University of Washington
Seattle, Washington 98195

Edward Glaser
Case Western Reserve University
617 Crawford Hall
Cleveland, Ohio 44106

William V. Glenn, Jr., M.D.
DHEW/HSMHA/NCHSRD
Room 15-82 Park Tower Building
Rockville, Maryland 32601

William F. Godwin
Research Psychologist
Educational Testing Service
Princeton, New Jersey 08540

Albert Gold
Special Assistant to the President
Rockefeller University
66 Street and York Avenue
New York, New York 10021

Michael M. Gold
Associate Professor
University of Pittsburgh
Pittsburgh, Pennsylvania 15213

Max Goldstein
Professor
New York University
251 Mercer Street
New York, New York 10012

Theodore Graves (Lt. Col.)
Air Force Institute of Technology
AFIT/SLS
Wright-Patterson Air Force Base
Ohio 45433

Eugene E. Graziano
Assistant University
Librarian-Services
University of California
Santa Barbara, California 93106

Martin Greenberger
Professor of Computer Science
The Johns Hopkins University
34th and Charles Streets
Baltimore, Maryland 21218

Michael F. Gross
Temple University
College Hall
Philadelphia, Pennsylvania 19122

Richard E. Grove
University Computer Center
Virginia Commonwealth University
Richmond, Virginia 23220

Warren J. Haas
Vice President for
Information Services
Columbia University
New York, New York 10027

Stanley Habib
Director of Computing Activities
Polytechnic Institute of Brooklyn
Brooklyn, New York 11201

Dale J. Hall
Director, Research Computing Center
Indiana University
Memorial Hall West 002
Bloomington, Indiana 47401

Michael Hall
Consultant
Auerbach Associates, Inc.
Philadelphia, Pennsylvania 19102

Carl Hammer
Director, Computer Sciences
UNIVAC Division of Sperry Rand
Corporation
2121 Wisconsin Avenue, N.W.
Washington, D.C. 20007

Walter C. Hamner
Head, Data Processing Department
McKeldin Library
University of Maryland
College Park, Maryland 20742

Duncan Hansen
Director CAI
Florida State University
Tallahassee, Florida 32306

Rodney B. Harrington
Purdue University
Lafayette, Indiana 47907

Fred H. Harris
Director, Computation Center
University of Chicago
5640 South Ellis
Chicago, Illinois 60637

W. H. Hayt, Jr.
Professor, Electrical Engineering
Purdue University
Lafayette, Indiana 47907

Frank Heart
Director, Computer Systems Division
Bolt, Beranek, & Newman
50 Moulton Street
Cambridge, Massachusetts 02138

Donald L. Henderson
Director of Computer Services
Mankato State College
Mankato, Minnesota 56001

T. W. Hildebrandt
Head, Computing Facility
National Center for
Atmospheric Research
Boulder, Colorado 80302

Walter R. Hinchman
Assistant Director
Office of Telecommunications Policy
Executive Office of the President
Washington, D.C. 20504

Lynn Hopewell
Telcom Incorporated
8027 Leesburg Pike
McLean, Virginia 22101

John A. Hrones
Provost of Science and Technology
Case Western Reserve University
Cleveland, Ohio 44106

W. H. Huggins
Department of Electrical
Engineering
The Johns Hopkins University
Baltimore, Maryland 21218

Richard R. Hughes
Assistant Vice Chancellor and
Professor of Chemical Engineering
University of Wisconsin
Engineering Research Building 411
Madison, Wisconsin 53706

Donald J. Hummel
Chief, System Design Mathematics
Bureau
Specialized Information Services
National Library of Medicine
Bethesda, Maryland 20014

Elizabeth Hunt
Congressional Liaison Office
National Science Foundation
Washington, D.C. 20550

G. A. Hutchison
Director, Academic Computing
University of Alabama in Birmingham
Birmingham, Alabama 35233

Edwin J. Istvan
Associate Director of Teleprocessing
Center for Computer Sciences
and Technology
National Bureau of Standards
Administration Building, Room A-209
Washington, D.C.

Frederick H. Jackson
Committee on Institutional
Cooperation (CIC)
1603 Orrington Avenue
Evanston, Illinois 60201

W. Carl Jackson
Director of Libraries
Pennsylvania State University
University Park, Pennsylvania 16802

H. Brooks James
Vice President, Research and
Public Service Programs
Post Office Box 309
Chapel Hill, North Carolina 27514

Sohs James
Director, University Computing Center
The Johns Hopkins University
Baltimore, Maryland 21218

David Jasper
Staff Consultant, Business
Strategies
Control Data Corporation
8100 34th Avenue, South
Bloomington, Minnesota 55420

George M. Jenks
University Librarian
Bucknell University
Lewisburg, Pennsylvania 17837

Lee Johnson
COMNET
5185 MacArthur Boulevard, N.W.
Washington, D.C. 20016

Jeremy E. Johnson, Director
Computing and Data Processing
University of Maine
Orono, Maine 04473

Whitney L. Johnson
911 East Broad Street
Richmond, Virginia 23219

Ronald W. Jonas
1839 Coronado Avenue
Youngstown, Ohio 44504

Robert L. Jones
Director, Health Sciences
Computer Center
University of Maryland
Baltimore, Maryland 21201

Peggy M. Karp
Technical Staff
The MITRE Corporation
McLean, Virginia 22101

Paul R. Keenan
Assistant to the Vice President
for Research
University of Missouri
418 Clark Hall
Columbia, Missouri 65201

Thomas A. Keenan
Program Director
National Science Foundation
Washington, D.C. 20550

H. Eugene Kessler
Executive Director and Treasurer
EDUCOM
Princeton, New Jersey 08540

Frederick Kilgour
Director, Ohio College
Library Center
1314 Kinnear Road
Columbus, Ohio 43212

Daniel B. Killeen
Director of Computing
Tulane University
New Orleans, Louisiana 70118

Harold B. King
The Urban Institute
2100 M Street, N.W.
Washington, D.C. 20418

Jonathan J. King
Program Specialist
Biotechnology Resources Branch
National Institutes of Health
Bethesda, Maryland 20014

William R. King II
SUNY at Albany CS-25
Albany, New York 12222

Ethel B. Kinney
EDUCOM
Princeton, New Jersey 08540

John C. Klensin
Research Staff
MIT
575 Technology Square – 5th Floor
Cambridge, Massachusetts 02139

Paul L. Koepsell, Director
Research and Data Processing
South Dakota State University
Brookings, South Dakota 57006

William L. Konigsford
New Jersey Department of
Higher Education
225 West State Street
Trenton, New Jersey 08625

Robert R. Korfhage, Director
Computer Science Operational
Research Center
Southern Methodist University
Dallas, Texas 75222

Rex Krueger
Director, Computer Center
University of Colorado
Boulder, Colorado 80302

Thomas E. Kurtz, Director
Kiewit Computation Center
Dartmouth College
Hanover, New Hampshire 03755

Samuel J. Kursh
George Washington University
2511 Q Street, N.W.
Apartment 309
Washington, D.C. 20007

Warren C. Lackstrom
National Bureau of Economic
Research
Computer Research Center
545 Technology Square
Cambridge, Massachusetts 02139

Donald T. Laird
Pennsylvania State University
Director, Computation Center
Computer Building
University Park, Pennsylvania 16802

Carolyn P. Landis
Secretary
EDUCOM
Princeton, New Jersey 08540

Larry L. Langdon
Box 484
Virginia Union University
Richmond, Virginia 23220

Lanse M. Leach
Chief, Computer Systems
Branch ISD
United States Military Academy
West Point, New York 10996

William K. LeBold
Staff Associate
National Academy of Engineering
Commission on Education
2101 Constitution Avenue, N.W.
Washington, D.C. 20418

John C. LeGates
Executive Director EIN
EDUCOM
Princeton, New Jersey 08540

Leonard P. Levine, Director
University of Wisconsin-Milwaukee
Computer and Management Services
Division
3200 North Cramer Street
Milwaukee, Wisconsin 53201

J. C. R. Licklider
Professor of Electrical Engineering
Massachusetts Institute of Technology
545 Technology Square – Room 801
Cambridge, Massachusetts 02139

George F. Lindamood
Mathematician
National Bureau of Standards
B 216, Technology Building
Washington, D.C. 20234

Robert A. Loscher
Director, Computer Services
Glassboro State College
Glassboro, New Jersey 08028

William F. Luebbert
Director, Instruction Support
Division
United States Military Academy
West Point, New York 10996

Marlene Lustick
EDUCOM
Princeton, New Jersey 08540

Peter G. Lykos
Program Director
Special Research Resources
National Science Foundation
1800 G Street, N.W.
Washington, D.C. 20550

Davis B. McCarn
Acting Associate Director
for Science
Communications and Computer
Engineering Service
National Library of Medicine
8600 Rockville Pike
Bethesda, Maryland 20014

Richard W. McCoy, Director
Academic Computing Center
University of Wisconsin
1210 West Dayton Street
Madison, Wisconsin 53706

Henry McDonald
Associate Director
Electronics and Computer
System Research Lab
Bell Telephone Labs
Murray Hill, New Jersey 07974

Jim McDonald
Alexander Road
Princeton, New Jersey 08540

Laurence C. McGinn
Temple University
1831 North Broad Street
Philadelphia, Pennsylvania 19122

David E. McIntyre, Director
Illinois Computer Consortium
University of Illinois
162 Engineering Research Lab
Urbana, Illinois 61801

Douglas B. McKay
IBM Research Center
P.O. Box 218
Yorktown Heights, New York 10598

James L. McKenney
Graduate School of Business
Administration
Harvard University
Soldiers Field
Boston, Massachusetts 02138

Scott McNeilly
Massachusetts State College
System
65 Franklin Street
Boston, Massachusetts 02110

C. A. Magwire
Director, Computer Center
Portland State University
Portland, Oregon 97207

Herbert Maisel
Director, Computation Center
Georgetown University
Washington, D.C. 20007

Judith G. Malkin
Computing Center
University of Texas
Austin, Texas 78712

Eric G. Manning
Associate Chairman, Department
of Computer Science
University of Waterloo
Waterloo, Ontario, Canada

Clair G. Maple
Director, Computation Center
Iowa State University
104 Computer Science Building ISU
Ames, Iowa 50010

Thomas Marill
Computer Corporation of America
Cambridge, Massachusetts 02139

Joseph Markowitz
Staff/DSR
Massachusetts Institute of
Technology – Fifth Floor
575 Technology Square
Cambridge, Massachusetts 02139

Gregory Marks
Head, Computing Support Center
for Political Studies
Institute for Social Research
University of Michigan
Ann Arbor, Michigan 48104

Sidney P. Marland, Jr
U.S Commissioner of Education
Department of Health, Education
and Welfare
Office of Education
Washington, D.C. 20202

Beatrice Marron
National Bureau of Standards
Washington, D.C. 20234

Carl B. Marx
Head, Department of Computer
Services
The University of Calgary
2920-24 Avenue, N.W.
Calgary, Alberta T2N 1N4
Canada

Joseph E. Matar
Associate Provost
Marquette University
615 North 11th Street
Milwaukee, Wisconsin 53233

Henry H Matelson
Director, Computer Services
Trenton State College
Trenton, New Jersey 08625

Stuart Mathison
Arthur D. Little, Inc.
3 Ridge Road
Lincoln, Massachusetts 01773

Morris Mayers
M.A. Mayers Associates
41 Adams Drive
Princeton, New Jersey 08540

Jack M. Meagher, Director
Computer Center, Associate
Professor of Mathematics
Western Michigan University
Kalamazoo, Michigan 49001

Terry P. Medlin
Graduate Assistant
Computer Science Center
University of Maryland
College Park, Maryland 20742

John P. Menard
Computer Science Center
University of Maryland
College Park, Maryland 20742

Robert Metcalfe
Research Staff Member
MIT Project MAC
545 Technology Square
Cambridge, Massachusetts 02139

V. Alonzo Metcalf
Vice President for Administration
Arizona State University
Tempe, Arizona 85281

Paul T. Mielke
Head, Mathematics Department
Wabash College
Crawfordsville, Indiana 47933

E. P. Miles, Jr.
Director, Computer Center
The Florida State University
Tallahassee, Florida 32306

Robert Miller
Director, Computer Center
Marquette University
1515 West Wisconsin Avenue
Milwaukee, Wisconsin 53233

Ronald F. Miller
Director, New England Library
Information Network
40 Grove Street
Wellesley, Massachusetts 02181

Don Mittleman
Director, Computer Center
Oberlin College
Oberlin, Ohio 44074

Russell C. Mills
Associate Vice Chancellor
University of Kansas Medical Center
Kansas City, Kansas 66103

Benjamin Mittman
Director, Computer Center
Northwestern University
Evanston, Illinois 60201

Charles W. Moore
Howard University
Washington, D. C. 20001

Jean P. Moore
Staff Associate
National Academy of Engineering
Commission on Education
2101 Constitution Avenue, N.W.
Washington, D.C. 20418

David W. Morrisroe
Director of Financial Services
California Institute of Technology
Pasadena, California 91109

Charles Mosmann
Consultant
1015 Dolphin Terrace
Corona Del Mar, California 92625

T. M. Murray
65 70th Aerospace Medical
Wright-Patterson Air Force Base
Dayton, Ohio 45433

Wayne A. Muth, Director
Computer Center
West Virginia University
Morgantown, West Virginia 26506

Joseph D. Naughton
Chief, Computer Center
National Institutes of Health
Bethesda, Maryland 20014

Edward J. Nime
Environmental Protection Agency
National Environmental Research Center
Cincinnati, Ohio 45268

D. H. Norrie
Director, Information Services
University of Calgary
Calgary 44, Alberta, Canada

Richard C. Norris
Consultant
Arthur D. Little, Inc.
Acorn Park
Cambridge, Massachusetts 02140

Charles M. Northrip
Director of Media Services
University of Alaska
Fairbanks, Alaska 99701

Rebecca Nwude
Information Science Librarian
Drexel University Library
Philadelphia, Pennsylvania 19104

David Nyman, Associate Director for Data Systems
Illinois State Board of Higher Education
Springfield, Illinois 62708

Thomas O'Brien, Acting Director
Office for Information Technology
Harvard University
456 Holyoke Center
Cambridge, Massachusetts 02138

Ralph O'Dette
Senior Staff Advisor
Chemical Abstracts Service
The Ohio State University
Columbus, Ohio 43210

Lawrence H. Oliver
1800 G Street, N.W.
National Science Foundation
Washington, D.C. 20550

Paul Oliver, Staff Scientist
Computer Sciences
UNIVAC Division of Sperry Rand
2121 Wisconsin Avenue, N.W.
Washington, D.C. 20007

Wallace C. Olsen
National Agricultural Library
Beltsville, Maryland 20705

Thomas O'Rourke
Tymshare
525 University Avenue
Palo Alto, California 94301

Eric V. Ottervik
Vice Provost
Lehigh University
Bethlehem, Pennsylvania 18015

Michael A. Oxman
Program Administrator
National Institutes of Health
Bethesda, Maryland 20014

Louis T. Parker, Jr.
Director, N.C. Educational Computer Service
Box 12175
Research Triangle Park
North Carolina 27709

Robert Pearson, Coordinator
Georgia Computer Network
532 Hartford Building
100 Edgewood Avenue
Atlanta, Georgia 30303

Robert A Pfenning
Director of Remote Computing
Lehigh University
Bethlehem, Pennsylvania 18015

T. David Phillips
Director, Campus Facility
Stanford University
Stanford, California 94305

Jean-Claude Poree
French Scientific Mission
French Embassy
1033 Massachusetts Avenue
Cambridge, Massachusetts 02138

Jonathan Postel
University of California
at Los Angeles
Los Angeles, California 90024

Thomas N. Pyke, Jr.
Chief, Computer Systems Section
National Bureau of Standards
Gaithersburg, Maryland 20234

Joseph Raben, Editor
Computers and the Humanities
Queens College
Flushing, New York 11367

Charles B. Ray
Acting Director
Booth Computing Center
California Institute of Technology
Pasadena, California 91109

Joseph B. Reid
Director a l'exploitation Informatique
Universite du Quebec
2050 St-Cyrille ouest
Quebec, 10e, Canada

Roderick R. Ricard, Jr.
Director, Administrative Systems
and Computational Services
University of New Hampshire
Durham, New Hampshire 03824

Lawrence Roberts, Director
Information Processing Techniques
Advanced Research Projects Agency
1400 Wilson Boulevard
Arlington, Virginia 22209

Stewart Robinovitz
Systems Supervisor
Center for Political Studies
Institute for Social Research
University of Michigan
Ann Arbor, Michigan 48104

Robert J. Robinson
Director Computing Center
State University of New York
at Albany
1400 Washington Avenue
Albany, New York 12222

Peter Roll
217 Morrill Hall
University of Minnesota
Minneapolis, Minnesota 55455

Saul Rosen
Director, Computer Center
Purdue University
Lafayette, Indiana 47907

David Rosenwald
Advisory Marketing Representative
IBM Corporation
1500 Life of Georgia Tower
600 West Peachtree Street
Atlanta, Georgia 30308

Howard Rovelstad
Director of Libraries
University of Maryland
College Park, Maryland 20742

Harry B. Rowell, Jr
Associate Director, Computer Center
Carnegie-Mellon University
Pittsburgh, Pennsylvania 15213

John W. Rudan
Director, Office of Computer
Services
Cornell University
Ithaca, New York 14850

Gerald Ruderman
545 Technology Square
National Bureau of Economic Research
Cambridge, Massachusetts 02139

Patricia Runge
EDUCOM
Princeton, New Jersey 08540

Robert S. Runyon
The Johns Hopkins University
Baltimore, Maryland 21218

Ronald M. Rutledge
Director, Computer Center
Carnegie-Mellon University
Pittsburgh, Pennsylvania 15213

Carl H. Sachtleben
Director of Libraries
Western Michigan University
Kalamazoo, Michigan 49001

George Sadowsky
Senior Research Staff
Urban Institute
2100 M Street, N.W.
Washington, D.C. 20037

W. H. Sandeford, U.S N.
Director, Computer Services
U.S. Naval Academy
Annapolis, Maryland 21402

Ward Sangren
Coordinator of Computer Activities
University of California
Berkley, California 94720

Regina Scarborough
EDUCOM
Princeton, New Jersey 08540

Hal B. Schell Associate Director
of University Libraries
Southern Methodist University
Dallas, Texas 75222

R. Ames Schroeder
Director, Computation Center
Duke University
Durham, North Carolina 27706

John H. Schuenemeyer
University of Georgia
Athens, Georgia 30601

Keith W. Sehnert M.D.
3839 26th Street
North Arlington, Virginia 22207

Warren D. Seider
Professor
University of Pennsylvania
375 Towne Building
Philadelphia, Pennsylvania 19104

R. G. Selfridge
Director, Computer Center
University of Florida
Gainesville, Florida 32601

Philip W. Semas
Chronicle of Higher Education
Washington, D.C.

John R. Senior, M.D.
Principal Investigator, CBX Project
NBME/ABIM
3930 Chestnut Street
Philadelphia, Pennsylvania 19104

Robert F. Sharp
Administrative Systems Coordinator
University of California
1355 Third Avenue
San Francisco, California 94122

C. D. Shepard
Communications Research Center
P.O. Box 490
Ottawa, Ontario, Canada

Robert W. Shields
Associate Director, Computer Center
Oklahoma University Health
Science Center
P.O. Box 26901
Oklahoma City, Oklahoma 73190

Lee Shope
Head of Systems Programming
University of Iowa
Iowa City, Iowa 52240

A. Kenneth Showalter
Office of Naval Research
6300 North Washington Boulevard
Arlington, Virginia 22205

Theodore Sjoerdsma
Director of Instructional
and Research Services
University of Iowa
Computer Center
Iowa City, Iowa 52240

John E. Skelton
Research Associate
University of Denver
Denver, Colorado 80210

Vladimir Slamecka (DLS)
Professor and Director
School of Information and
Computer Science
Georgia Institute of Technology
Atlanta, Georgia 30332

Frank Slater
Manager of Library Systems
Division
University of Pittsburgh
Pittsburgh, Pennsylvania 15213

A. Q. Smith
University of Alabama
P.O. Box 3345
University, Alabama 35486

Robin E. Spock
Director, Instructional Systems
Development
City University of New York
535 East 80th Street
New York, New York 10021

Robert F. Steinhart
Senior Marketing Representative
IBM Corporation
673 Morris Avenue
Springfield, New Jersey 07081

Kenneth J. Stetten
Department Head, Computer Systems
The MITRE Corporation
McLean, Virginia 22101

George Stockman
Graduate Assistant
Computer Science Center
University of Maryland
College Park, Maryland 20742

J. C. Strauss
Director, Computing Facilities
Washington University
Saint Louis, Missouri 63130

Len Swanson
Associate Program Director
EDUCOM
Princeton, New Jersey 08540

Eric Swarthe
Computer Specialist
National Bureau of Standards
Washington, D.C. 20234

Lee Talbert
Bolt, Beranek, & Newman
50 Moulton Street
Cambridge, Massachusetts 02138

Bruce L. Taylor
Division Director, Systems
Educational Testing Service
Princeton, New Jersey 08540

Charles G. Taylor
Marketing Representative
IBM Corporation
413 West State Street
Trenton, New Jersey 08607

Herb Test
New York Times
New York, New York 10036

John Thorne
Computing Center
University of California
Irvine, California 92664

Siegfried Treu
General Physical Scientist
National Bureau of Standards
Washington, D.C. 20234

R. E. Utman
Library Systems Analyst
Princeton University
Box 200
Princeton, New Jersey 08540

David M. Vaught
Director, Computer Services
Memphis State University
Memphis, Tennessee 38111

Frank Verbrugge
Director, University Computer Services
University of Minnesota
143 Space Science Center
Minneapolis, Minnesota 55455

David C. Walden
Bolt, Beranek & Newman
50 Moulton Street
Cambridge, Massachusetts 02138

William E. Walden
Director, Systems and Computing
Washington State University
Pullman, Washington 99163

John E. Walker
Computing Center
Lehigh University
Bethlehem, Pennsylvania 18015

Thomas Walker
Manager of Plans, Policy and Procurement
State Computer Center
Baton Rouge, Louisiana 70804

R. Brian Walsh
Director, Computing Center
University of Notre Dame
Notre Dame, Indiana 46556

James A. Warden
Director of Computer Services
Wabash College
Crawfordsville, Indiana 47933

Jesse H. Webb
Assistant Director
Educational Testing Service
Princeton, New Jersey 08540

George W. White
Compatibility Staff Officer
National Communications System
Washington, D.C. 20305

James E. White
Systems Programmer
Augmentation Research Center
Stanford Research Institute
Menlo Park, California 94025

Stephen White, Director
Systems and Operations Support Division
GSA Regional Office, Room 6409
Washington, D.C. 20407

Bruce Whitener
Leasco
5401 Westbard Avenue
Bethesda, Maryland 20016

V. E. Wichert
Assistant Director
Systems Division
Educational Testing Service
Princeton, New Jersey 08540

Ronald L. Wigington
Director, Research and Development
Chemical Abstracts Service
The Ohio State University
Columbus, Ohio 43210

L. V. Willey, Jr.
IBM
10401 Fernwood Road
Bethesda, Maryland 20034

E. Belvin Williams
Vice President of Operations
Educational Testing Service
Princeton, New Jersey 08540

Leland H. Williams
President and Director
Triangle Universities Computation Center
P.O. Box 12175
Research Triangle Park
North Carolina 27709

Robert L. Wilson
Professor of Mathematics
Ohio Wesleyan University
Delaware, Ohio 43015

Paul J. Wolfe
University of Kansas
Lawrence, Kansas 66044

Seymour Wolfson
Assistant Professor
Computing Center
Wayne State University
Detroit, Michigan 48202

John F. Wood
Supervisory Computing System Analyst
National Bureau of Standards
Washington, D.C. 20234

Harold Wooster
Chief, Research and Development
Lister Hill National Center for Biomedical Communications
National Library of Medicine
Bethesda, Maryland 20015

J. B. Wyatt
University Computing Center
University of Houston
Houston, Texas 77004

Douwe B. Yntema
Senior Research Associate in Psychology
Harvard University
William James Hall 920
33 Kirkland Street
Cambridge, Massachusetts 02138

Marvin Zelkowitz
University of Maryland
College Park, Maryland 20742