DOCUMENT RESUME

ED 070 459 LI 004 011

AUTHOR Hammer, Donald P., Comp.; Lelvis, Gary C., Comp.
TITLE Indiana Seminar on Information Networks (ISIN), Proceedings (October 26-28, 1971).
INSTITUTION Indiana State Library, Indianapolis.; Purdue Univ., Lafayette, Ind. University Libraries.
SPONS AGENCY Office of Education (DHEW), Washington, D.C.
PUB DATE 72
NOTE 97p.; (9 References)

EDRS PRICE MF-$0.65 HC-$3.29
DESCRIPTORS *Information Networks; *Librarians; Library Automation; Library Cooperation; *Library Networks; On Line Systems; Seminars; Telephone Communication Systems
IDENTIFIERS *Indiana

ABSTRACT

The Indiana Seminar on Information Networks (ISIN) was the result of the realization that many Indiana librarians were not fully aware of the benefits of library networking and were not really using the Indiana TWX network to its fullest advantage. In addition, it was felt that the statewide TWX arrangement and its available services needed more publicity in the state than it had received in the past. A far more important consideration was that a seminar on networking would increase the knowledge of Indiana librarians and would broaden their perspective of the subject, thereby expediting the cooperative efforts so badly needed all over the state. The following topics were discussed: (1) Introduction to Networks; (2) Library of Congress MARC & RECON; (3) NELINET (New England Information Network); (4) An On-line Interlibrary Circulation and Bibliographic Searching Demonstration; (5) Ohio College Library Center; (6) User Response to the FACTS Network; (7) Indiana TWX Network Discussion--Operational Aspects; (8) Indiana TWX Network Discussion--Financial and Organizational Aspects; and (9) How Does the Network Serve the Researcher? (Author/SJ)

INDIANA SEMINAR

ON

INFORMATION NETWORKS (ISIN)

PROCEEDINGS

October 26-28, 1971

Compiled by

Donald P. Hammer
University of Massachusetts Library

and

Gary C. Lelvis
Purdue University Libraries

Purdue University Libraries
West Lafayette, Indiana
1972

TABLE OF CONTENTS

INTRODUCTION

The Indiana Seminar on Information Networks (ISIN) was the result of the realization that many Indiana librarians were not fully aware of the benefits of library networking and were not really using the Indiana TWX network to its fullest advantage. In addition, it was felt that the state-wide TWX arrangement and its available services needed more publicity in the state than it had received in the past. A far more important consideration was that a seminar on networking would increase the knowledge of Indiana librarians and would broaden their perspective of the subject, thereby expediting the cooperative efforts so badly needed all over the state.

These concerns were discussed at a meeting of the Indiana Advisory Council for LSCA, Title III, early in 1970. That discussion culminated in the ISIN conference that brought to the Purdue University campus some of the most experienced and knowledgeable people in the field. It was hoped that these individuals and their experiences and philosophies would provide an impetus to networking in Indiana that would lead to an expanding interest and an extensive development of the cooperative concept of librarianship. Whether these things will come to pass remains to be seen, but the effort was made to cultivate a receptive environment.

The program was designed to present a challenge to the participants as well as a learning situation. Maryann Duggan was chosen to be the lead-off speaker who would set the atmosphere for informal learning and relaxed teaching. This she did in her warm and informal way that, unfortunately, cannot easily come through the printed word as it did through personal appearance. The participants, however, will long remember her approach to teaching the problem of networks through her "networking game."

Lucia Rather, from the Library of Congress MARC Development Office, presented a paper on the MARC format, its acceptance by libraries all over the world, and the experiences of L.C. in developing large machine-readable data files. Without MARC there would be no automated processing networks, as there would not be many other automated activities that are now taken for granted.

The first of the papers that described an existing organization was on NELINET. Ron Miller depicted this cooperative processing effort in terms of its development, finances, management, and problems.

An on-line demonstration of Ohio State University's circulation system was one of the high points of the program. In addition to demonstrating an outstanding automated circulation system, the demonstration was intended to reveal to the seminar participants the ease with which an on-line bibliographical file can be searched by computer. This effort was of far greater significance than appeared on the surface, in that it made evident the practicality of interlibrary data file accessibility. It illustrated beyond a doubt that whenever librarians decide to do it, they can make a national bibliographical data bank available to their patrons.

One of the most significant processing networks in the country is that of the Ohio College Library Center. This pioneering operation was described by its Director, Fred Kilgour. The purposes, development, and accomplishments of OCLC were related with clarity and enthusiasm. The designers of the conference program hoped that the obvious success to date of this venture would show the way for Indiana libraries to go. The success or failure of that hope will become apparent in due time as Indiana proceeds to develop its information resources.

On the theory, whether true or not, that man learns by his mistakes, the SUNY FACTS informational network was included in the program. The value of FACTS lies in the lessons to be learned from both human error and machine immutability. As revealed by Lynn Hard, its costs were too high, its product too poor, but more importantly, its public never learned to use it to its best advantage. Its lesson is clear--plan well, but also satisfy a need. It entered a note of caution into the proceedings and was welcomed as a voice of experience.

The home forces then took over, as Indiana State Library staff members provided a discussion period on the Indiana TWX network--how it works--at what cost--how to use it--what its needs are--were all points considered.

Among the well-known speakers at the conference was Ferdinand Leimkuhler, whose talk, unfortunately, cannot be included in this volume. Dr. Leimkuhler was the American

Society for Information Science's Distinguished Speaker for the year and as such his paper will be published by ASIS. However, he has provided a brief abstract (which immediately follows) of his paper entitled, "Operations Research and Information Science--A Common Cause."

> Operations research and information science are twin offspring of post-World War II efforts to rebuild society through science. Spokesmen for this cause, such as J. D. Bernal and Vannevar Bush, were convinced of the need for revolutionary approaches to the organization of science in the application of scientific methods to human affairs. They believed this eventually would lead to greater human freedom, and their immediate practical success pushed aside any concern for the validity of that position. Operations research and information science were begun as expedient ways to solve some very immediate and important social problems. Indeed, there is an atmosphere of desperation and hardheaded practicality surrounding the efforts to bring these two disciplines into prominence. Today, however, the rise of technological disillusionment and concern with the limits of growth are forcing practitioners in both fields to re-examine their premises and promises of a Utopian future. They must appraise the societal impact of the technologies they foster, and redefine their proper role in the slower revolution of human development. Science in the service of man must be guided by an equally sophisticated professional or ethical consciousness.

The last paper given was by Irwin Pizer, then newly appointed University Librarian at the University of Illinois Medical Center of the Health Sciences in Chicago. His paper was on how the network serves the researcher. After discussing some of the things the researcher should be able to find in a network, Irwin described the development and problems of the SUNY Biomedical Communication Network in New York State. His paper is a gold mine of experience and should be read carefully by everyone involved in or likely to be involved in networking.

The conference was primarily intended as a training session for Indiana librarians, but the stature of the speakers, the quality of most of the papers, and the instructional value of their comments warrents a wider distribution of the proceedings. Perhaps through these

papers a contribution will be made that will encourage librarians, and others as well, to promote the development of all kinds of cooperative efforts in the information dissemination field. The advantages and benefits of networks or their more formal embodiment, the consortium, should by now be clear to all from those agreements now functioning. Obviously, many librarians are not allowing the lessons learned to die aborning--the network, automated or otherwise, is here to stay. The economics, but also the logic of today's situation insists on cooperative development--there simply is no other way to go now or in the foreseeable future. The point is not whether networks will develop, but how sophisticated will circumstances allow them to become--how much of our resources, human and economic, are we willing to expend in order to develop an efficient national or international informational system? That answer cannot be found in these proceedings nor anywhere else at present; the answer must await developments.

If this conference, however, has given the effort even a small nudge, it will have served its purpose. Even more, it will have expedited a developing effort that must have its incipience reiterated many times on the local scale before it can become a mature reality on the national level.

August, 1972

Donald P. Hammer
University of Massachusetts

INTRODUCTION TO NETWORKS

Miss Maryann Duggan, Director
Southwestern Library Interstate Cooperative Endeavor
(SLICE)

It is indeed a pleasure to be back in Indiana again. Your state is lovely and interesting. You know, each state is different--both topographically, ecologically, and culturally. Each state has its own charm and unique character.

Although I personally believe in networks, only you can decide if networks are the tools for you to achieve the goals you have set for Indiana library development. I am not here to "sell" you on networks. I am here to share with you some basic concepts of networking and to explore with you the potential and problems of networks.

Let us start with some basic definitions. What is a network? For the purpose of our discussion today let's define a network as "a systematic and planned organization of separate autonomous units interconnected for the purpose of achieving some goal that is more than any one of the units can achieve individually." Now, let's review this definition very carefully.

<u>systematic</u>--orderly, analytical, quantitative
<u>planned</u>--there is a roadmap, there are objectives, someone knows where we are going
<u>organization</u>--a new entity with life, budget, procedures, and behavior
<u>separate autonomous units</u>--the components, who maintain identity while giving and taking, nodes, if you will
<u>interconnected</u>--the physical as well as the organizational ties holding the network together
<u>purpose of achieving some goal</u>--function oriented. What is the network designed to do?

Please note that this definition does not specify computers or telecommunications or fancy hardware. The emphasis is on organization in a systematic and planned manner of a group of individual units for a purpose. I believe this organizational structure is essential prior to the adoption of sophisticated computer and telecommunication methods. I also believe that the hardware and the technology is on the shelf today that could make it possible for networks to achieve very advanced services--if that is the purpose.

Others in the field may define networks slightly different. Becker and Hays definition is "a set of interconnected points." Technically, this is correct in the electrical engineering or telecommunications field. And networks are really a very old concept. The old party line telephone with an operator at a switchboard is, in fact, a network. Each instrument is a node and the operator is the switching center where decisions are made and nodes interconnected. The purpose of that network is communication--voice grade. The wires provide the vehicle or highway for the voice. The members of the network were users and paid user fees in order to have the benefits of the switching center and the services.

Radio and television networks are also relatively old, and also exhibit some of the characteristics of networks we will be examining. The network is regulated by the Federal Communications Commission which establishes basic operating codes designed to protect the public. Each station must be licensed and thereby agrees to the FCC's code of operation. Yet each local station has the option of program (content) selection, etc. The "headquarters" provides "packaged" programs which are probably superior to local productions, i.e., talent, skill, music, stage settings, actors, etc. The cost of the network is provided by the advertisers (sponsors) who hope to sell their products over the network, thus, the user ultimately pays in the price of the product. If the users don't like the program, the sponsor discontinues support and another "service" is put on the network.

Perhaps these two analogies are a little farfetched, but I offer them for your consideration in thinking about networks. A third analogy which offers some insight in network planning is the one of public utilities--gas, lights, water, and sewage. Again, the organizational structure exists, a purpose is established, separate autonomous units are interconnected, and costs are paid by the user for only the amount of service consumed. Certainly it's cheaper and more efficient to hook up to the light utility than it is to build your own generating plant!

The above analogies also illustrate another basic principle of network design and that is the principle of standardization and compatibility. We will discuss this in more detail later.

Now let us review the existing library-type networks from a functional viewpoint.

1. Communication Networks

Functionally, the purpose of a communication network is to communicate between a sender and a receiver.

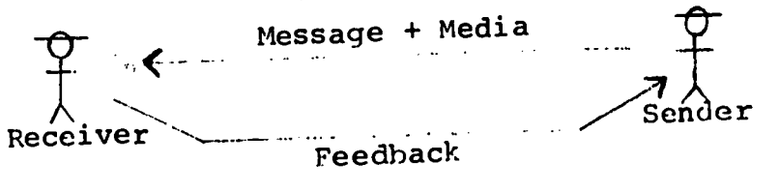

Basic Communication Model

Components
a. Receivers
b. Message and Media
c. Sender
d. Feedback

Note emphasis on Receiver

This Basic Communication Model is applicable, in my opinion, to not only 1:1 communication, but also to network communications. The model provides a framework for looking at the components in the communication process. If any one component is below par, the system doesn't work too well. The network participants have the responsibility to design the system, and to communicate the desired message in the appropriate media to the selected receiver. Thus a communication network is only a way of achieving communication. The participants are "linked" and "wired" for communication. What is put on the network is an option. Many states now operate a "Library Communications Network". Most of these have the potential of transmitting a variety of messages depending on band width and organizational purpose. So let's look at other functional uses of these networks.

2. Document Delivery Network

This is the fancy term for interlibrary loans! We will go into the details of this type of network a little later.

3. Library Processing Networks

These are networks in which the purpose is to provide technical processing (acquisitions and cataloging) for the members and users. You will hear about these in detail during this conference.

4. Information Networks--Knowledge Networks

This type of network emphasizes "information transfer"--regardless of the packaging of the information. It is separate from document delivery. Generally speaking, two types of information networks are operational today:

a. Information banks providing print-outs of document identifiers meeting certain predefined informational content. There are now 49 computerized information banks that are available commercially. The emphasis is not on the physical document as such, but on the information content of the document.
b. Information banks providing information separate from document packaging. Two examples are audio tape dial-up systems available at several universities and MIST. MIST (Medical Information Service by Telephone) operates in the State of Alabama and provides medical referral information to health professionals calling in. The emphasis is on information--not documents. These networks may be oriented to educational or problem solving purposes.

Conceptionally, and in practice, all of these types of library-related networks can be put together to provide a new dimension of library services.

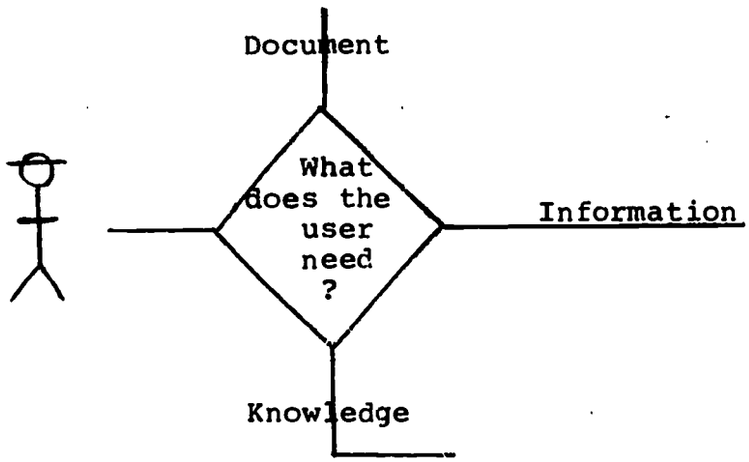

In this conceptional model, the local library is the "entry point" into the system. If the facilities or resources of the local library are inadequate to meet the user's needs, the network can be tapped according to plan and function.

Potential Benfits and Disadvantages of Networks

What does a library network mean to you? Why should you get involved? Well, as I said earlier, only you can make that decision. But let me share with you some environmental factors you may wish to consider.

Peter Drucker and Ralph Tofler's description of our society tells me that more than ever before it is essential for man to understand himself and his environment if he is to survive. Libraries offer man this potential--yet most libraries are struggling for survival, also. The explosion of publications, new media, people, and costs is such that the future of the individual library as a self-sufficient entity is questionable. Volumes have been written and spoken on this topic, so I do not intend to labor the point. Suffice it to say that if libraries are to continue to play a viable role in our society, a new approach and methodology must be developed. In my opinion, networks offer that potential. Furthermore, as in the past, librarians who are truly service oriented are vigorously and eagerly seeking new ways to offer new services.

Networks can be the source of these new ways and new services through the following factors:

1. Development of and access to greater resources
2. Freedom from routine processing tasks
3. Access to special information banks--reference services in-depth
4. Provision for multi-media and learning center concepts
5. Direct, anticipatory services oriented to local problems--interaction with the community in an active way
6. Sharing of expertise and unique resources to strengthen the whole

In essence, library networks open a whole new dimension for library services and make it possible for libraries to continue to be responsive and catalytic in this dynamic world.

What are some of the disadvantages of networks? Networks require:

1. A willing abandonment of some traditions
2. A change in operating policies and procedures
3. A willing abandonment of self-sufficiency and an acceptance of the sharing concept
4. Participation in group decision making and abiding by the group's decision

5. Shifting in "power" from individual units to network units
6. The development of a quantitative or analytical rigor essential for network operation and evaluation. This requires retraining of staff.
7. Total commitment to the network concept

Only you can tell if the benefits are worth the price.

Library Network Analysis Theory

May I reemphasize here that a library network is a combination of people, systems, technology, materials, media, and purpose--within a legal, financial, and organizational framework.

Organization: A network is really a new organizational entity. In modern organizational theory, networks may be defined as an open system. According to Katz and Kahn*, open systems are characterized by:

1. Importation of Energy

   In some form, the system takes energy from its external environment and receives renewed supplies of energy from other institutions, people, or other social structures. It is not self-sufficient or self-contained.

2. Energy Transformation, i.e., Through-Put

   The network creates a new product, or processes material, or trains people, or provides a service. Work gets done in the network.

3. Product Identification, i.e., Output

   The network exports a product into the environment which is of social or economic value.

4. Cyclic Exchange

   Output furnishes energy which is fed as input back into the network to keep the organization viable. There is a continuous cycle of activity.

---

*Katz, Daniel, and Kahn, Robert L., The Social Psychology of Organizations, New York, Wiley, 1966, pp. 19-28.

5. Negative Entropy

In the natural course of events, there is a running down of the energy in a system and this leads to disorganization. The open system must store energy --i.e., a survival position requires reserve energy, which gives the system the flexibility to survive.

6. Information Input, Negative Feedback, and Coding Process

There must be negative feedback to correct errors. "When a system's negative feedback discontinues, its steady state vanishes, its boundary disappears, and the system terminates."

7. Differentiation of Roles and Functions

Social organizations move toward role specializations.

8. Equifinality

Networks can reach the same final state from different initial conditions and by different paths of development.

The above concepts of open systems organizational theory are applicable to network development and operation. I believe they are also applicable to an individual library, but a network is infinitely more complex since it involves a variety of different organizations working together. The Open Systems Organizational Theory provides insight into causes of failure or patterns of success. Perhaps the best way to illustrate these concepts is to walk-thru a pilot model tested in the Dallas area.

(At this point Miss Duggan reviewed the methodology and findings of the Dallas Area Pilot Model of Interlibrary Transactions, which is too lengthy to duplicate herein. The full report of this study is available from the Texas State Library or Miss Duggan.)

To further illustrate the principles of networking, the participants in the conference were divided into six groups by type of library. Samples of the "Networking Game" described in the above study were used by the group to develop an understanding of some of the networking principles.

The twelve basic principles of network design illustrated by these samples are as follows:

1. Organizational structure that provides for fiscal and legal responsibility, planning, and policy formulation. It must require commitment, operational agreement, and common purpose.

2. Collaborative development of resources, including provision for cooperative acquisition of rare and research material and for strengthening local resources for recurrently used material. The development of multi-media resources is essential.

3. Identification of nodes that provide for designation of role specialization as well as for geographic configuration.

4. Identification of primary patron groups and provision for assignment of responsibility for library service to all citizens within the network.

5. Identification of levels of service that provide for basic needs of patron groups as well as special needs, and distribution of each service type among the nodes. There must be provision for "referral" as well as "relay" and for "document" as well as "information" transfer.

6. Establishment of a bi-directional communication system that provides "conversational mode" format and is designed to carry the desired message/document load at each level of operation.

7. Common standard message codes that provide for understanding among the nodes on the network.

8. A central bibliographic record that provides for location of needed items within the network.

9. Switching capability that provides for interfacing with other networks and determines the optimum communication path within the network.

10. Selective criteria of network function, i.e., guidelines of what is to be placed on the network.

11. Evaluation criteria, procedures to provide feedback from users and operators, and means for network evaluation and modification to meet specified operational utility.

12. Training programs to provide instruction to users and operators of the system, including instruction in policy and procedures.

The foregoing components of the ideal inter-library network (one so designed that any citizen anywhere in the state can have access to the total library and information resources of the state through his local library) may be considered the conceptual model, or the floor plan, from which the network can be constructed. Although these twelve components might be labeled "ideal," they are achievable and they are within reach of the present capability of all libraries today.

The significance of library networks becomes obvious when one reviews national trends. Title III of the Library Services and Construction Act (LSCA) has resulted in each state developing state-wide interlibrary networks. The Higher Education Act has stimulated the development of academic "knowledge networks" as demonstrated by the increasing number of broad-band microwave systems now in use for higher education. The Medical Library Assistance Act has had appreciable impact on the development of interstate networks among medical libraries. Furthermore, the Medical Library Assistance Act has established the precedence of national planning and administration of a national library network. Personally, I feel that the experiences of those Regional Medical Libraries involved in the Medical Library Assistance Act are of great value to other types of libraries contemplating network development.

Another national trend which will have considerable impact on library networks concerns some recent FCC decisions and the licensing of new telecommunications carriers, such as Datran Corporation. The American Library Association has appointed a Telecommunications Committee to assist the library profession in moving towards the telecommunications application. Along this same line, the recent funding of an experimental interstate cooperative in the Southwest perhaps emphasizes the national trend towards developing a regional plan for networks.

Thus, in conclusion, library networks are real, alive, and doing well. The national trend indicates a positive future for such networks. The State of Indiana, in my opinion, is at a crucial crossroad in that the next few months will determine the future for state-wide networks. May I simply ask, what plans do you have? What steps do you intend to take? What goals and priorities have you established? And may I also suggest that the world of library networking is the most exciting, the most frustrating, and has the greatest potential for imaginative library service. I believe the librarians of Indiana are ready, able, and willing for this new dimension in library service.

MARC and RECON: PROGRESS IN THE CREATION OF A STANDARDIZED BIBLIOGRAPHIC DATA BASE

Lucia J. Rather
MARC Development Office
Library of Congress

In 1971, Henriette Avram published an article on library automation in the Annual Review of Information Science and Technology. In it she quoted an old Russian proverb which I think is very appropriate to any discussion of networks. The proverb went this way, "The word is quickly spoken but the deed takes longer." A number of quickly spoken words on the subject of networks have appeared in the last few years. In general the advantages of networks have been spelled out. These include economical creation and maintenance of bibliographic files, shared data, and immediate access to information. The advantages may seem clear, but progress towards creation has been slow.

Networks can be discussed from many viewpoints: the overall concepts, the functional aspects, the geographic aspects, the rules for members, the design of the switching center, and many other factors. Tonight I wish to confine my remarks to one aspect--the provision of standardized bibliographic records. The records are the sine qua non of any network system. The purpose of the MARC and RECON programs has been to create and make available such records.

The Library of Congress has been in the business of creating bibliographic records for the country as a whole since 1901 when it began to print its catalog cards in standardized form for distribution. Therefore when the creation of machine-readable bibliographic records was proposed in the early 1960's, it was logical that the Library be selected to develop such a program. The result was the MARC Pilot Project which demonstrated the feasibility of distribution of machine-readable records, followed by the on-going MARC program in 1969. The MARC Distribution Service now supplies weekly tapes containing all English language records currently cataloged by the Library. The tapes are sold to subscribers for a minimal fee, basically covering the cost of the magnetic tapes and duplicating and mailing charges. The tapes are not cumulated, and it is the responsibility of the subscriber to process the tape as he sees necessary. In general, approximately 60,000 new records are added to the MARC data base each year. This means that since the beginning of the distribution service in March 1969, the Library has added over 160,000 records to the tape.

In 1969 the Library had 80 subscribers; in 1971 the number is 62. This appears to be progress in reverse. The figures, however, are misleading. In 1969, in the wake of enthusiasm for library automation, libraries purchased tapes before they

were ready to make full use of them. Although we do not have complete information, it is safe to say that many sets of tapes were stored away and never used, and at the end of the year, a number of subscriptions were cancelled. MARC subscribers today have far more knowledge of the problems and benefits of automation. It is probable that most of our current subscribers are making profitable use of the tapes.

A second factor is the type of use made of the tapes. In 1969, subscribers used the tapes almost exclusively for their own libraries. In 1972, a number of these subscribers are supplying bibliographic information to many other libraries. What is happening is actually the implementation of the much talked about and finally realized sharing of a single computer based file to serve the bibliographic needs of many users.

A prime example of a multi-use subscriber is the Ohio College Library Center (OCLC) serving over 50 Ohio college and university libraries. These libraries receive LC MARC records or input their own records at substantial cost savings. Mr. Kilgour will describe this system later.

The Oklahoma Department of Libraries, on a minimal budget, is providing a MARC SDI (Selective Dissemination of Information) service to 66 libraries. Many of these libraries are in Oklahoma, but some are as far away as Hawaii and Canada. Oklahoma also plans to supply catalog cards in the near future. A number of special products have been produced. In a recent project, Tulsa Public Library submitted 8000 requests for records needed to update their book catalog for the 1969-1971 period. Seventy-five percent were found on the MARC data base and supplied on magnetic tape. The records were used in the production of a new book catalog obviating the necessity for a large-scale keypunching effort.

A third group is the New England Library Network (NELINET). Ron Miller will discuss this in a later paper, but I would like to mention that NELINET supplies bibliographic products to 20 or 21 member libraries.

Work is also progressing on an international level. In 1967, staff members from the British National Bibliography (BNB) visited LC and worked with staff members of the MARC Project for many weeks. They learned the workings of the MARC System and were influential in the development of some aspects of the MARC format. Shortly after this they set up their own pilot project, and LC and BNB have been exchanging tapes ever since.

The Canadian National Library is also developing a MARC project. They propose to build a data base using records from both LC and BNB MARC tapes as well as their own records. The MARC format will be used as their standard for bibliographic exchange.

The Japanese are beginning a ten-year project called J-MARC. During the first five years they plan to use LC MARC tapes to create western language records. In the second five years, they hope to extend coverage to Japanese and Chinese. Input, manipulation, and output of Chinese and Japanese characters is, of course, a formidable problem.

MARC projects are also underway in Norway and Denmark. These projects are called, naturally, NORMARC and DENMARC. In France, a system called MONOCLE has been developed using LC MARC as a point of departure. I understand that the French national bibliographies plan to use MONOCLE as the basis of their automated system. In Italy, the National Central Library of Florence has designed an automated system using the MARC format for the production of the Italian national bibliography. In Australia, Germany, Spain, the USSR, Yugoslavia, South Africa, the Netherlands, and Belguim, MARC is being studied and discussed.

All this activity, plus the recognition that as the world seems to grow smaller, the demand for access to information across national boundaries grows larger, is creating an environment for an international MARC. We have come to realize that we can no longer afford the luxury of producing multiple records for the same item.

Before economic exchange of bibliographic information becomes possible, we must have standardization of the bibliographic format. I would like to discuss tonight just what standardization of a format means. The MARC format has three aspects: structure, content designators, and content. The structure is the empty container. The structure of MARC requires that there be a 24-character leader containing control information, a directory made of 12-character entries serving as a table of contents to the record, and finally a series of variable length fields containing the data itself. The standard bibliographic format adopted in 1970 by the American National Standards Institute uses the MARC structure.(1) The format structure has been submitted to the International Standards Organization (ISO) and there is reason to believe that it will be adopted as an international standard.

The second aspect of the format consists of the content designators. The content designators are the actual tags, indicators, subfield codes, and fixed fields that are used to identify and describe data elements. At one time, we imagined that we could identify all the data elements needed for all kinds of bibliographic information. In turn, we could design one large multi-purpose format. Our actual experience has shown that it is difficult to get people to agree on what data elements are required for one type of material, and getting agreement on the content designators describing them is even harder. Because of this, our first MARC format was limited to book materials.(2) We spent two years discussing the format with librarians and systems people from all over the country. The resulting format

is necessarily a compromise, but we feel it combines the best features of many suggestions. Only after we had gained some experience in the creation and use of book records, did we go on to other types of material. Since that time, formats have been developed for maps, serials, and films.(3-5) Music and manuscript formats are still in process. Although these formats have the same structure, their data elements and therefore their content designators may vary. Where the data elements are the same, the tags are the same. For example, many of the same data elements, such as main entry, title, and imprint, are found in the book and map formats. Scale, however, is a data element that is unique to maps. Scale, therefore, has a unique tag not found in any other format. Because we can add data elements and their content designators as we need them, we can say that the MARC format is hospitable to all kinds of bibliographic information.

The MARC content designators for books have been adopted as a standard by the American Library Association. This does not mean that everyone is completely satisfied. At LC we continue to receive suggestions on one hand that we simplify the format and on the other hand that we add new complex features to make it more useful for certain types of operations. It will probably never be possible to satify all kinds of users. Some of the tags and subfield codes are needed for printing; some are needed for filing; still others are needed for information retrieval. It is almost inevitable, therefore, that when a format is designed to serve many functions, the results will be complex.

The MARC content designators are standardized only in the United States. The British, Canadian, and Italian tags and subfield codes are very close to ours but contain difference that will make translation programs necessary before the records can be processed. The French format bears a close resemblance, but the content designators are far more complex. On the other hand, the Spanish and German proposed formats differ considerably. These differences will constitute a very real problem in any proposed exchange of information. Not only will special programs be needed to translate one format into another, but in many cases exact translation will be impossible.

The third aspect of the format is the data content itself. This area presents perhaps the greatest problems in standardization for the content is dependent on the cataloging rules. The content of American, British, and Canadian MARC records is similar since all use the Anglo-American (AA) cataloging rules in the establishment and use of headings. Even here there is some variation because rules are interpreted differently and because there is no common list of authorities for determining the established form of names for headings. Content from countries that do not use the AA rules varies widely from American MARC.

A similar lack of standardization has been evident in the body of the entry. Data elements included in some formats are missing in others and, if there, the form is frequently different. The problems of exchanging bibliographic information in this chaotic situation have been recognized for some time. In 1969 an International Party of Cataloging Experts was convened under the auspices of the International Federation of Library Associations (IFLA). The U.S. representative to this group was Henriette Avram, Chief of the MARC Development Office. This group developed a Standard Bibliographic Description (SBD) for the body of the entry of a catalog record. The SBD prescribes a fixed order of data elements within the body of the entry, specifies a minimum set as mandatory, and defines standard punctuation to separate the elements. A final draft was presented to IFLA and adopted in the summer of 1971. The draft was then sent to the various national library associations for consideration. The British have adopted the SBD and plan to implement it early in 1972. The French and Germans will probably go along. It will be presented to ALA at midwinter where we hope it will be adopted in principle. When the actual details have been worked out, it should be put in use by the Library of Congress.

The significance of standardization in facilitating exchange of bibliographic information in machine-readable form can hardly be overemphasized. Without standardization, network systems will expend their energy in translating and converting content designators and data elements. This time would be better spent in developing maintenance, retrieval, and distribution systems.

In addition to its efforts in promoting standardization of bibliographic records, the Library of Congress has been active in trying to find ways to increase the general store of machine-readable records. The current MARC Distribution Service includes English language titles catalogued since 1969. This data base is growing steadily, but this does nothing to help the many libraries wishing to convert their entire back files. Conversion of back files by individual libraries is basically uneconomical. For one thing, the same title may be converted many times. In addition, since many libraries can afford only the most brief and most simple type of conversion, the advantages of standardization are lost. If the back files of the Library of Congress could be converted, this would provide over four million records in the full standardized format. The feasibility of such a project was studied by the Library, and in 1969, a pilot project was funded by the Council on Library Resources and the Office of Education. This retrospective conversion project (called RECON) was scheduled to last two years and was divided into a production testing group and a research group.

Under the production portion, the Library agreed to input its 1968 and 1969 English language records that were not already in the current MARC Distribution Service. The problems of input were great. Copies of all 1968 and 1969 cards were drawn from Card Division stock and then sorted into English and other languages. The English language cards were then Xeroxed on to worksheets. In order to make sure that the very latest bibliographic information was included, each card had to be checked against the Library's Official Catalog and updated if necessary. After this, the records were edited and proofed in the same fashion as the current MARC records. Approximately 57,000 records were created this way.

This portion of the project demonstrated the problems of simply handling the conversion of large files. In order to determine the problems of converting foreign language records and older records using old style cataloging rules, the Library selected 5000 records to analyze and input. Methods of handling old style cataloging were documented. Editors with little foreign language training edited French and German records. Predictably, their rate of input was considerably slower. The major errors made by the editors were found to be in the assignment of fixed fields and in the tagging of the body of the entry. (The adoption of the SBD should improve the latter problem considerably.)

A second area of investigation was the development of a computer program called Format Recognition to aid in the input of MARC records. In the regular MARC system, an editor assigns the necessary tags and subfield codes on an input worksheet. The record is then keyed on a Magnetic Tape Selectric Typewriter and processed on the computer. The completed record is printed out and proofed by an editor. MARC editing is a complex job, and training MARC editors is time consuming. It is also extremely detailed. The development of the Format Recognition program was designed to allow the computer to take over some of the tasks of the editor.

Under Format Recognition, the input typist keyboards the bibliographic information directly from catalog cards. Separation of data elements and the assignment of the tags, indicators, and subfield codes are performed by the computer. The completed MARC record is printed out and then proofed by a MARC editor.

Format Recognition works by examining strings of data for keywords and significant punctuation. For example, the collation field is identified by the presence of "v.", "p.", or "cm." Subject entries are preceded by arabic numerals, periods, and spaces. Conference headings are identified by the presence of words such as "Meeting", "Seminar", "Symposium", etc. Words such as "Duke", "Lord", "Pope", or "Bishop" indicate a personal name.

The program includes 63 keyword lists with over 2500 terms. Format Recognition sometimes makes mistakes; however, if all records were keyed correctly, approximately 70 percent of the records would be error-free. Since typists do make mistakes, the actual number of error-free records is currently closer to 35 percent. The remaining records have one or more errors which are generally identified and corrected during the proofing process.

Approximately 15,000 RECON records have been processed by Format Recognition. In general, proofing of these records can be accomplished at the rate of over eight records an hour. This compares with an average of five records for the combined editing/proofing operation used in the old MARC system. It is expected that we will begin to put all current MARC records through Format Recognition early in January 1972.

Another major research project carried on as part of the RECON Pilot Project was the investigation of input devices. MARC has never used card input due to the need for upper and lowercase letters and because of the length of the record. At first, a paper tape typewriter was used, but in the last few years, a Magnetic Tape Selectric Typewriter has been used. This off-line input device produces magnetic tape cassettes that must be processed through a converter to produce a computer-compatible tape. The keyboard is basically a standard typewriter keyboard with upper and lowercase characters. Unusual diacritics and special characters are input by using shift codes. Using this device, our typists can type approximately 13 tagged records or 17 Format Recognition records per hour. In an effort to improve this speed, a number of on-line devices and minicomputers were investigated.

One device, the Keymatic, was tested extensively in an operational environment. The main feature of the Keymatic is an oversized keyboard that can be customized for the user. For the RECON experiment, each of the 175 characters in the character set and each major tag was assigned its own key. A major problem proved to be a lack of paper hard copy (a small screen showed only the last character typed). The MARC worksheets are very complex. These worksheets have passed through many hands--descriptive cataloger, subject cataloger, shelflister, etc., and sometimes the data are difficult to read. The lack of paper hard copy made it difficult for the typist to tell when a typing mistake had been made. By the end of the experiment, the typists could type as fast on the Keymatic as they could on the MT/ST, but the Keymatic cost three times as much. Thus no savings on cost were demonstrated. For this reason, the device did not seem feasible for use in the LC environment.

Optical character recognition (OCR) devices were also investigated. OCR has made remarkable strides in the last few years, but reading printed characters with proportional spacing is still a problem. Two devices, the Model 370 CompuScan optical character reader and the Dissily Systems' Scan-Data, were tested. The Library submitted a sample of catalog cards in mint condition to each company. In both cases, the tests were unsuccessful because of an extremely high error rate. This error rate was due in part to the coarseness of the card stock and in part to the fact that although the human eye could not detect it, some of the type faces were worn. The large library character set was also a problem. The Library of Congress is continuing to monitor the development of such devices for OCR input linked up to a Format Recognition program, which could be the key to the feasibility of inputting large numbers of bibliographic records.

The results of RECON indicate that while desirable and technically feasible, the practical problems make it unlikely that any large-scale project will be undertaken by the Library in the near future. Instead the Library will concentrate on current records with expansion to foreign languages. In the summer of 1972, if funded, we plan to expand to French, adding approximately 12,000 titles a year. After this, we hope to add German and the other Romance languages. This should cover the core of most libraries' needs, and by the end of 1972, we will have five years of English language records in the data base.

In addition to handling books, MARC is being expanded to other forms of material. A MARC format for maps has been designed, and the Library's single sheet map records are now being input. A film format has been developed in consultation with groups throughout the country interested in films. LC will begin to put its film records into machine-readable form early in 1972. By 1973, the film portion of the Library of Congress book catalogs will be produced on a photo-composition device from the film data base.

After much consultation with the library community, a serials format has been developed. At present, the Library has no extensive serials project. Serials in the Main Reading Room and Science Reading Room collections will be put into the MARC data base. Formats for manuscripts and music (including both scores and sound recordings) are also in progress.

The latest MARC input project is the Cataloging in Publication (CIP) project. Under the CIP program, publishers send galleys to LC several months before publication. LC makes a catalog record that is basically complete except for the collation and returns this record with the galley to the publisher so that it can be printed in the book. The CIP record is also input to the MARC data base where it is available to

subscribers well before publication. This timely information should make it possible for MARC subscribers to use the information for acquisitions.

To conclude, the availability of a large number of standardized bibliographic records is a prerequisite for the development of networks. The formats developed at the Library of Congress should contribute to standardization and the MARC data bases now being created should provide at least the nucleus for future network systems.

REFERENCES

1. American National Standards Institute. American National Standard for Bibliographic Information Interchange on Magnetic Tape (ANSI Z39.2-1971) New York, 1971. 34 p.

2. U.S. Library of Congress. MARC Development Office. Books: a MARC Format. 5th ed. Washington (For sale by the Superintendent of Documents, U.S. Government Printing Office) 1971. 106 p.

3. U.S. Library of Congress. Information Systems Office. Maps: a MARC Format. Washington (For sale by the Superintendent of Documents, U.S. Government Printing Office) 1970. 45 p.

4. U.S. Library of Congress. Information Systems Office. Serials: a MARC Format. Washington (For sale by the Superintendent of Documents, U.S. Government Printing Office) 1970. 72 p.

5. U.S. Library of Congress. MARC Development Office. Films: a MARC Format. Washington (For sale by the Superintendent of Documents, U.S. Government Printing Office) 1970 (i.e. 1971). 65 p.

THE NEW ENGLAND LIBRARY INFORMATION NETWORK: PROGRESS AND PROSPECTS

Ronald E. Miller, Director
New England Library Information Network
(NELINET)

Don Hammer has asked me to review the concepts, development, operational accomplishments, difficulties, and problems relating to the New England Library Information Network (NELINET). I will cluster my remarks under each of these topics.

CONCEPTS

In general, NELINET's objectives grew from two simple ideas. First, that several libraries working together on an interstate or regional basis could take significant steps toward solving some basic financial and service problems which faced them. Second, it was thought that some of the solutions to those problems would result in significant reductions in the rate of cost increases which faced each library administrator at budget time.

To test the validity of these two concepts, people and resources were blended to form a new organization and the New England Library Information Network (NELINET) began. The people and resources in question will be discussed in terms of five organzational components:

I. MARC
II. Money
III. Management
IV. Members
V. Machines

A description of the interplay of these components comprises the development of NELINET since 1967.

DEVELOPMENT

I. MARC

The firm of Inforonics, Incorporated (Maynard, Massachusetts), had historically been associated with the Library of Congress during the latter's early studies which led to the implementation of the MARC Distribution Service.

As everyone knows by now, the MARC program developed through two phases (excluding RECON). The MARC I phase included the field testing of a format for communicating

bibliographic information in machine-readable form by means of several pilot projects. Inforonics received copies of the MARC I tapes and demonstrated the technical feasibility of producing catalog cards, spine and book labels by computer, and as a by-product, building an ever-enlarging file of bibliographic records coupled with local holdings statements which could become a central or union catalog in machine-readable form. These records could be used for a seemingly limitless number of purposes. It was a heady time indeed.

In due course, MARC II was implemented as the second or operational phase of the MARC program. With the help of funds from the Council on Library Resources, through NELINET, Inforonics geared up. Computer programs were revised, studies of collection overlap, card format and telecommunication were made, and in April, 1970, NELINET went operational. Truly, without MARC, NELINET would probably not now exist.

II. Money

Until June, 1970, virtually all funds for research, development, administration and special projects were supplied by the Council on Library Resources and the U.S.O.E. It came as a surprise to me, when I was asked to join the NELINET National Advisory group in early 1970, that this persisted after three years. No membership organization, I reasoned, could prevail very long unless some funds were provided by the membership itself. The Council on Library Resources was also of a similar mind. In June, 1970, with funds exhausted and no proposals in the works, the inevitable happened. Research and development ceased and the first NELINET Director was released. Shortly thereafter, the R&D staff at Inforonics was also depleted.

The five participating libraries and the New England Board of Higher Education (NELINET's parent organization) contributed enough money to continue and a search for a new director began. Into this uncertain state of affairs I cast my lot in January, 1971, along with two other professional members and one secretary.

Since that date, two additional grants were obtained from the Council. The first grant partially supported a fairly comprehensive look at the operations of the existing members and fourteen new members were added during that period. In addition, a careful look at production costs and techniques was made with the result that a unit cost scheme was adopted by the membership and implemented by Inforonics. Furthermore, we are able to obtain good management information about system and user performance which was not available before.

The second grant reflected a change in the world of library network development, since more options for future development were being offered to NELINET than were heretofore

available. The most promising option appeared to be the Ohio College Library Center (OCLC). The grant will be for six months beginning January, 1972, and is intended to provide the NELINET membership with some critical evaluative information about the OCLC system. The study may, in fact, lead us to a decision to replicate the OCLC system in New England.

For the moment our financial base is sound, but much work remains to be done. One area in particular needs special attention: the organization of regional funds outside the membership itself which can be used to partially support the on-going expansion of membership participation and services. This effort is complicated, since NELINET is identified for the moment with institutions of higher education exclusively. Library funds within the New England states has historically been used primarily to support public library cooperation.

III. Management

As noted above, NELINET is really a creature of the New England Board of Higher Education (NEBHE), with headquarters in Wellesley, Massachusetts. This Board is funded by each state according to a document called The New England Higher Education Compact. It is not incorporated and has the legal status of an interstate agency--one of few in the six state New England Region. NELINET is classified as a program of NEBHE. To add to this mildly confused state of affairs, the Director of NELINET is also NEBHE's Director of Library Programs. As such, the NELINET membership, although primarily concerned with the development of an electronic bibliographic network, can deal with other projects with non-member libraries, since all of higher education comes within its preview. There are 249 such institutions in New England. NEBHE then is the administrative home of NELINET and is the signer of all contracts, grants and agreements to which NELINET is a part.

But administration is only half the management function. Inforonics has been the source of almost all of the technical development, proposal and report writing. Very little control has in fact been in NEBHE's hands until recently. Inforonics has been extraordinarily sensitive to the design suggestions of the NELINET membership, but all technical, pricing, and production decisions have been mostly under the control of Inforonics.

The relationship of NEBHE/NELINET and Inforonics has been quite good. Since the beginning of the relationship, the idea has been expressed that at some future point "when the system is complete" that NELINET would hire its own staff and run the system. It was never defined what was meant by "completeness" and in fact a final design was never completed except in highly theoretical terms. Certainly, no one had a reasonable

approximation of how much time or money it would take to complete it. The R&D costs were calculated at a minimum of one million dollars. This expenditure was to have resulted in a hybrid on-line and batch system using a PDP-10 computer. The areas of service were acquisitions, cataloging, technical processing, circulation control, reference services, interlibrary loans, and management information support.

The formal management and governance structure of NELINET is still evolving. Policy decisions are in the hands of an Executive Committee which has an elected Chairman, Vice-Chairman and Comptroller. NEBHE has certain veto powers through its Director, and all fiscal and personnel policies fall within NEBHE's control. In addition to the Executive Committee, there is a Membership Council and two advisory groups.

The National Advisory Panel (NAP) is being established now and will probably include at least three prominent people of national influence and reputation. The NAP is concerned with coordination with other networks as we move into a nationwide system of network modes, federal legislation, and funding sources.

The Regional Advisory Panel (RAP) will contain representatives from all six New England states. Some represent state library agencies, others are legislators, members of the New England Library Association or the New England Governors' Conference. This Panel will address itself to NELINET's relationship to their several constituencies.

The Director of NELINET reports to the Executive Committee, and as NEBHE's Director of Library Programs, to the Director of NEBHE.

IV. Members

The membership may be libraries which can be defined as academic or research oriented. The latter category could include some public libraries. Indeed, the Worcester Public Library is now a member because it in turn is a member of the Worcester Area Cooperating Libraries, a consortium of 14 libraries which is listed as a single NELINET member. The Massachusetts State Library also resides in this category. Special libraries which are parts of profit-making bodies are not eligible because of possible complications with NEBHE's tax exempt status.

In all there are twenty-one libraries and consortia which are either Supporting or Introductory Members; three other library groups are Affiliate Members outside of New England.

At the moment, assessments for Supporting Members are on a sliding scale from $1,000 to $10,000 depending upon the size of book budgets. Introductory Members pay $900 for one year after which a decision must be made by the library administrator as to the future status of his library. Although assessments have not been calculated for FY 72-73 at this point, we fully expect to pro-rate costs on a more egalitarian basis next year.

V. Machines

The final component is somewhat simplistic as a title, but it implies an unwaivering commitment to computer and telecommunications hardware to accomplish the two principle objectives stated at the beginning of this paper. These mutually supportive technologies do not exclude others, such as microforms and catalog production facilities, which can be wedded to the basic configuration. It is the basic configuration which is intended to define NELINET as a true electronic network.

For the moment the major computer is a Digital Equipment Corporation PDP-10 which is used through various service bureaus by Inforonics. In effect, we have a situation wherein a vendor to us uses other vendors, which means that the dollars available to provide services to our members are eroded through at least two levels of overhead. The printer is attached to an IBM 360.

The input to the Catalog Products Sub-System is punched paper tape produced by our members in their libraries. Teletype input was selected because these machines are fairly wide-spread, relatively inexpensive and are used for interlibrary loan purposes already. Libraries without teletypewriters may submit requests for cards and labels on paper forms.

OPERATIONAL ACCOMPLISHMENTS

Many of our accomplishments to date have been alluded to above, but several activities have been attempted outside the computer system with varying degrees of success. One service which is available and is derivative of the Catalog Products Sub-System is the ability to produce accessions lists for any single or group of libraries requesting them. So far only one of our members, the University of Rhode Island and its Extension Division Libraries has made use of it.

Other activities include the formation of two task groups in which non-NELINET members may also participate.

The Serials Task Group is addressing itself to two objectives:

1) can existing serials union lists be expanded or merged to include more libraries, and

2) can such lists be produced centrally by computer and be compatible with the MARC Serials Format.

A survey of all such activity in New England is underway, which is expected to be completed in March, 1972.

The Government Documents Task Group also has two utility studies underway:

1) to mass produce catalog cards for documents included in MARC for selected libraries, and

2) determine the feasibility of enriching the access points to depository documents by means of KWIC and KWOC indexing.

In cooperation with the University of Connecticut and the New Hampshire College and University Council, NELINET has produced two editions of a catalog of major microform holdings of its membership. A third edition is now under study. The study will look at the utility of such a catalog to the libraries before any decision is made to produce it.

Finally, an agreement was made among the founding members that each would take responsibility for collecting particular specialized materials. On that basis, NELINET has been twice awarded Title II special purpose grants. Changes made by U.S.O.E. in the point system awarding of these grants has weakened NELINET's eligibility on a region-wide basis. No application will probably be made during FY 71-72 since smaller metropolitan groups appear to be in more favorable positions now. The dependence of these funds upon disadvantaged, and Model City programs coupled with an emphasis upon new and two-year colleges effectively limits our ability to qualify.

DIFFICULTIES AND PROBLEMS

It might be interesting to take the same five organizational components mentioned above and explore the problems associated with each one, but that might be a bit tedious for us all. Instead, for the sake of simplicity only the major

problem areas will be identified in a somewhat random fashion, with some suggestions as to how a library consortium similar to NELINET might approach them.

Data Base

The core data base of NELINET is MARC, but a few thousand original records are also in the file. Since larger libraries acquire more items than are covered by the MARC file, useful products, such as book catalogs, are difficult to produce or justify. The inclusion of such non-MARC records into the file requires a massive data conversion project in addition to extracting, sorting and printing the records. To solve this problem of making a central bibliographic file which has reasonable coverage of current acquisitions, only fairly small undergraduate libraries (say 5,000 titles per year) would find it beneficial to rely upon MARC for more than 90% of their holdings. Ideally, local input, preferably on-line, would help solve the problem, but such input must be reasonably close to the MARC Communications Format, and it must be cheap. The present NELINET system is tape oriented and on-line processing by user libraries is still some months in the future.

Since holdings records for items produced in the batch system have not been maintained conscientiously by the members, it is doubtful that such catalogs could be produced without extensive review of the data files by user libraries. We do indeed look forward to the day when the MARC service itself, combined with RECON, is extended beyond its present scope (even with its attendant growth rate of consuming computer storage), and we wholeheartedly urge and support the Library of Congress in accomplishing this Herculean task.

Regionalism

I am personally not at all sure that the problems resulting from a commitment to build an interstate centrally administered network are worth the effort. There are precious few successful precedents to draw upon. We do not know if states will support us with hard cash when such support could be viewed as cash going out of state. The political, administrative and financial red tape within each state is appalling and complex. Some state budgets are biennial; some state legislatures don't believe in libraries or are irrationally jealous of their neighboring states. Our attempts at regionalizing NELINET are interesting indeed, but the proportion of our available energy which we may have to devote to solving the class of problems associated with that commitment may have to be re-examined. We are only just beginning to prepare the way; up to now we have been able to deal on an institution-by-institution basis. As cash flow demands increase, it will no

longer be possible to maintain that stance. We see this as the major area to which the Regional Advisory Panel must provide its best guidance.

Development

We have made a conscious decision to minimize our research and development costs by cooperating with other library groups. These cooperative efforts are already underway with OCLC, FAUL and the Union Library Catalog of Eastern Pennsylvania. Each of us has similar if not identical economic and service objectives. I personally feel that the use of available funds from private and public sources can best be allocated to cooperative rather than solo action. In these financially poor times, positive cooperative action must prevail over tradition, chauvinism, emotionalism and other human irrationalities or we will all be poorer in the long run.

In conclusion, despite the problems, despite the uncertainties, and the barriers to cooperative action, we must remain incurably optimistic and try very hard to make the months and years ahead good ones. They are bound to be exciting and rewarding times.

AN ON-LINE INTERLIBRARY CIRCULATION AND BIBLIOGRAPHIC SEARCHING DEMONSTRATION

Gary C. Lelvis
Purdue University Libraries

and

Donald P. Hammer
University of Massachusetts Library

The Ohio State University (OSU) circulation system was demonstrated through the use of an on-line terminal. The purpose of this demonstration was to illustrate the operation of a computer based circulation system, how the interlibrary loan function might be automated, and the actual operation of automation equipment. The terminal, an IBM 2741, was provided free of charge by the International Business Machine Corporation (IBM) for the conference.

The automated catalog access and circulation system at OSU encompasses 23 departmental libraries and the main library, serving 46,000 students, 3000 faculty, and 4000 university staff members. Currently, the system contains shelflist data on 2,500,000 volumes and 800,000 titles; circulation data on about 100,000 items checked out at any one time; and identification data on over 70,000 patrons. Of special note is the use of a telephone center where operators are continuously on duty to handle patron requests for card catalog data and circulation information.

The system is quite comprehensive in nature. On-line functions include data file searching by author and/or title, detailed inquiry of a single entry by call number or title number, charge out, discharge of returned items, renewals, placement of saves, recording of fine payments, and searching of the patron file by patron I.D. number or name. There are many off-line functions, for example, the generation of statistical reports and patron notices. However, no off-line functions were demonstrated at the conference.

Preparation for the live demonstration included programming the OSU IBM 360 model 50 computer (located at the OSU Learning Resources Computer Center in Columbus, Ohio) to accept the Purdue terminal as a valid hookup; obtaining a private telephone line which bypassed all Purdue switchboards; installing an IBM 2741 typewriter terminal; installing an IBM data set to convert terminal signals to telephone company signals and vice versa; and developing the procedures to dial-up the OSU computer, operate with it, and terminate the hookup. Cooperation from both OSU and

IBM was excellent. The only operation problem encountered concerned the telephone lines. Prior to obtaining a private line, a hookup was used which involved two university switchboards. Constant interruptions to the circuit caused the OSU computer to repeatedly disconnect the Purdue terminal. The use of a private line, plus notification to the Lafayette operator of our intention to transmit digital data, corrected the problem. See Figure 1 for a diagram of the hardware configuration.

The demonstration of the system took place informally at various times over a period of several days during the conference. A formal presentation using visual aids in conjunction with the terminal was made on Wednesday, October 27, 1971. An OSU representative present at Purdue for the conference, Mrs. Susan Eckhardt, operated the terminal.

The following paragraphs briefly describe each operation in the demonstration program:

Sign-on. This algorithm consisted of turning on the 2741 terminal and the data set, placing a long distance call through the Lafayette operator to the OSU computer, typing in a formated message, receiving a formated response from the computer, and then again typing a formated message to the OSU computer. Thus, the hookup was established and regular processing functions could be executed.

SH1/CONRLORD . A general search of the data file was made for the book LORD JIM by Joseph Conrad. The algorithm uses the first four letters of the author's last name and the first five letters of the first significant word in the title. In this case, the space between Lord and Jim counted as the fifth letter of the title. The OSU computer responded with a list of ten editions of LORD JIM, showing line number, author, title, and date of publication for each. The total number of matches, 13, was also printed. The line numbers were automatically assigned by the computer to each entry displayed. This line number is used in another algorithm to request detailed information about a particular entry (see SH2/LN=2). The next algorithm (PG2) had to be executed to view the remaining three matches. The limitation of displaying a maximum of ten matches through the use of the SH1 algorithm is due to basic computer hardware constraints.

PG2. The computer responded with a listing of the three remaining editions of LORD JIM.

SH1/CONR-----. This algorithm searches the data file for all authors whose last name starts with the letters CONR. This search, of course, was concerned with the author Joseph Conrad. The computer responded by stating that 305 matches were found on the characters "CONR" and it listed the first

ten by line number, author, title, and date of publication. Here, because the algorithm was not as precise as the author-title one, many more matches were found. Authors such as the James Henry Conrad, and others were included in the output. Obviously, any author whose last name starts with CONR and is included in the OSU data bank, will be listed by this algorithm. The terminal operator would have to ask for additional groups of ten titles each to complete the search for the title LORD JIM.

SH1/CONR-----/SKIP=30. This algorithm was used to view additional output beyond the first 30 titles. The algorithms SH1/CONR----- and PG2 and PG3 would display the first 30 titles of the search. The requirement for the SKIP option is basically an equipment limitation.

SH1/ AMERI. This algorithm was a title search and in this particular case the American Dental Directory was the item being searched. As would be expected, the response was overwhelming (762 matches). Fortunately, no additional groups of ten titles had to be called up as the American Dental Directory was the second line displayed by the terminal. Only line number, title, and date of publication was shown.

SH2/LN=2. This algorithm was used to call for detailed data about the item displayed on line 2, the American Dental Directory. Major items displayed by the terminal included bibliographical data such as call number, LC card number, title number, title, serials indicator, number of copies on campus, and publication date. The holdings data displayed included line number, copy number, circulation status, and location. The terminal also displayed circulation data, such as, patron I.D. number, volume number, copy number, renewal indicator, date of charge out, and due date.

SH2/CL=PL2804C5P81962/ALL. This is the same basic algorithm as the previous one. The availability of the call number for an item, in this case, PL2804C5P81962, precludes the need for a general search. Therefore, when the call number was provided, the system could go directly to the detailed record. The ALL option was used to obtain save information in addition to the detailed bibliographic data that is always supplied.

CHG/CL=PL2804C5P81962/C1/PI=999951. This algorithm was used to charge a book. Call number, copy number, and patron identification number were inputs needed to complete this transaction. The computer responded by typing on the terminal the input information plus author, title, location, title number, and a computer generated due date. Normally, this information would be used at OSU to complete the charge out procedure by automatically typing the charge slip at the library terminal nearest the shelving location of the book

and by having a page locate the item in the stacks. The book would then be held for pickup by the patron, or, if requested, it would then be sent through campus mail to the patron's office. Serials are an exception in that the complexity of the holdings statement precludes, in the present OSU system, having the needed volume and copy numbers available as part of the holdings data. Therefore, serials must be checked out in person at the location where the serial is housed.

REN/CL=PL2804C5P81962/C1/PI=CF999951/DUE=711230. Next the renewal algorithm was demonstrated. Again, call number, copy number, and patron identification had to be entered. In addition, the new due date was entered via the terminal. The computer acknowledged the renewal transaction by typing the input information and title number on the terminal.

SVE/CL=PL2804C5P81962/PI=CF999954. The save operation was next demonstrated using the SVE algorithm shown above. Copy number was not entered as saves are applied to a title, not to a particular copy. A detailed search of the record by call number CL=PL2804C5P81962, would reveal that since the book was charged out, the record had status information added to it showing that the only copy was charged to patron CF999951. The computer also indicated that the book had been renewed and was due on 711230, i.e.; 1971, December, 30; and that it had been flagged for recall as a save for patron CF999954.

DCG/CL=PL2804C5P81962/C1/PI=CF999951. This algorithm was used to discharge book number PL2804C5P81962. The computer responded with an acknowledgement that the transaction had been completed and with a notice that there was a save on the book. Please note in the preceding algorithm (SVE) that a save was placed on call number PL2804C5P81962 for patron I.D. number CF999954.

The demonstration went smoothly. There were no communication line, equipment, or software malfunctions. It was learned later that confusion reigned at the Main Library at OSU during the demonstration because the call number used (PL2804C5P81962) was a valid one, not a dummy as had been assumed at Purdue. Therefore, the charge out transactions were considered valid and a page at OSU retrieved the book for a non-existent patron (CF999951)!

After the official demonstration was over, the head of the Purdue Libraries' Interlibrary Loan Office used the author-title general search algorithm (SH1) to search a few interlibrary loan requests. Several loan requests were satisfied through this use of the terminal. If an interlibrary loan agreement existed between OSU and Purdue, the books could

have been charged out immediately and sent to Purdue on loan. There were no technical factors preventing such action.

The head of the Purdue Libraries' Order Unit also used the terminal in a general search mode to attempt verification of entries on book orders that were not yet searched in the usual manual way. No matches were found as the titles in the small sample used were very recent ones which OSU apparently had not yet acquired either.

The demonstration successfully proved the efficacy of on-line interlibrary cooperation. In addition, it illustrated the ease with which any number of libraries in a network could service the needs of patrons irrespective of such traditional constraints as time and distance. During this demonstration, the OSU catalog data truly became a union catalog from which any number of needs could be satisfied and services could be rendered in network fashion. It is hoped that the facility of a modern, comprehensive, automated interlibrary circulation and bibliographical search system has been established through this conference.

PURDUE UNIVERSITY

OHIO STATE UNIVERSITY

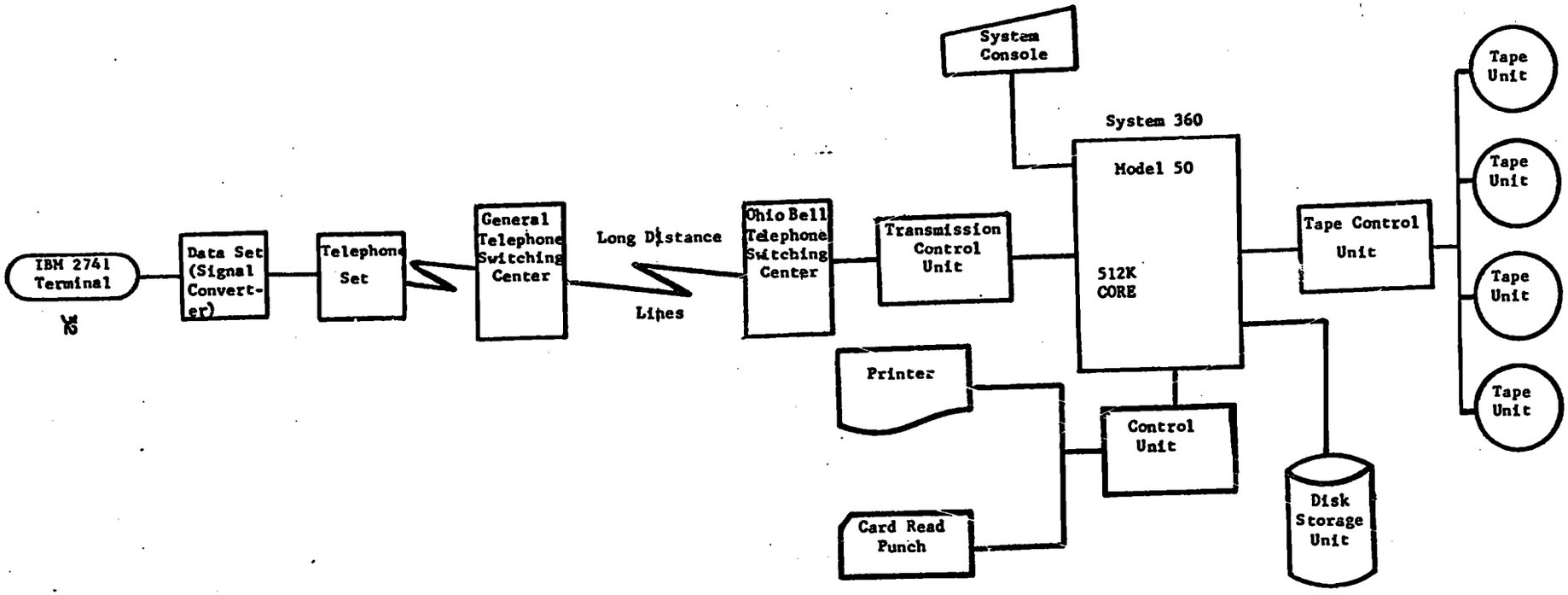

FIGURE 1.

Hardware Configuration for the Demonstration of the Ohio State University Circulation System.

OBJECTIVES AND ACTIVITIES OF THE OHIO COLLEGE LIBRARY CENTER

Frederick G. Kilgour, Director
Ohio College Library Center

The Ohio College Library Center (OCLC) was chartered on the sixth of July 1967; we are a recent organization. Its members may be institutions of higher education in the State of Ohio. At the present time, there are forty-nine active members. In addition, the Center can work with other regional centers that are, or intend to be, nodes in an electronic bibliographic national network. The Center has nine trustees that are elected from the representatives of its member institutions. The nine trustees have exactly the same functions as the trustees of this university or any corporation.

The staff of OCLC is now fourteen full-time people and three part-time people. Seven of the full-time people are on grant funds and seven on OCLC funds.

The financing of the Center for the first four years was by assessments that were calculated on the basis of the number of books cataloged in each library. Assessment income was used to establish the Center and for research and development. In its fifth year, its first year of on-line operation, the Center has a budget of $620,000 that does not include grant funds for research and development. We trust and hope that the State of Ohio will subsidize two-thirds of this sum. The Ohio Board of Regents intends to subsidize this first year to the extent of two-thirds and the second year to one-third. That will end the subsidization for shared cataloging. The state subsidy will make it possible for the member libraries to take advantage of normal attrition to transfer funds from salaries to OCLC and to net savings. I will say more about expenditures later in this talk.

The formal objectives are two. First, the major objective is for the Center to participate in institutional objectives. That is to say, the Center is going in the direction of making it possible for academic libraries to participate in the educational and research activities of the individual members of their institutions.

A century ago, academic libraries were largely involved in collecting, cataloging, and conserving books. Often they were open only an hour or two during a week. In the course of the last hundred years, librarians have opened their front doors earlier and kept them open later, but essentially there has been no major change in service after the introduction of full-time reference staffs in 1884. Students and faculty are

now allowed to use the library on the terms of the librarian, and academic libraries do not yet participate in the educational and research programs of their institutions.

One important aspect of this objective is that it will be necessary to supply information to library users when and where they need it. The Ohio State University's remote catalog access and circulation system supplies cataloging information to users when and where they need it, and in so doing, is the first major computerized break-out of classical librarianship. I am reasonably sure that toward the end of the present decade, or in the early part of the next decade, libraries and systems like the Ohio College Library Center will begin to supply users with textual information when and where they need it.

OCLC also has the objective of making the resources of its region available to faculty and students at each institution. This is achieved by an on-line union catalog. Textual material will be made available via interlibrary loan or extension of borrowing privileges to faculties and students of other institutions.

The major economic goal is to reduce the per-student rate of rise of costs in academic libraries to the rate of rise of general costs in the economy. Until recently, librarians have not been interested in the economics of libraries, and I am reasonably sure that this lack of interest sprang from the fact that we couldn't do anything about our economic plight. But now we can do something concerning the economics of libraries. It is necessary to investigate library economics, although there has been precious little published on it. The most important statement on the economics of libraries is that of William Baumol in his chapter on costs in Libraries at Large. Every librarian should read and reread this important report.

We librarians have long been interested in economies but economies are no longer enough. Thirty years ago I introduced at Harvard the first application of edge notch punch cards in libraries, in the form of a circulation system that Purdue is still using. Economies are not adequate to solve the present fiscal plight of libraries because soon after a money saving circulation system has been activated, salaries are inevitably raised that cancel the savings accomplished by the more efficient procedure. Moreover, the salaries keep on going up because they are forced up by rising living standards. The problem here is that librarians and staff members do not have a library technology that enables them to be increasingly productive. The productivity of library staff remains the same year in and year out; libraries are labor intensive institutions. The only solution to this problem of rapidly rising per-student costs is to invoke a library technology that will enable the staff to be increasingly productive, and the one instrument that is available to increase productivity is clearly the computer.

Some of my library colleagues feel that the present financial crisis is going to be solved as some other events occur, such as the end of the war in South East Asia, a slowing down of inflation, or a successful business recovery. It will not be. Neither the end of the war or a drop in inflation will decelerate the rate of rise of per-student costs relative to the rate of rise of costs per manhour worked in the general economy. Moreover, Baumol pointed out that if business recovery is accompanied by a considerable increase in productivity in manufacturing, it is going to worsen the library financial crisis. If productivity goes up more rapidly than anticipated in the economy as a whole, salaries of workers will go up faster, which means that library salaries are going to be forced up faster without having the equivalent productivity. As a result, a successful business recovery can worsen the financial situation for librarianship. Clearly, what is required is an increase in library staff productivity.

I have a personal objective, that is, to repersonalize and rehumanize libraries. I am not talking now about one librarian libraries, where the librarian knows what is in the collection and also knows the users personally, so that he or she can bring books and journal articles and an individual user together. However, with bigness has come a depersonalization in libraries. Librarians no longer talk about individual users, but rather about communities, or users, or patrons, or user groups. A library does not alter its organization because of any particular user wishing to use it. It remains the same monolithic arrangement of books and the same arrangement of cards in catalogs. There can be no personalized treatment in large libraries, and one thing that we must do is to humanize libraries and to personalize them. We must get away from the depersonalized monolithism of our present libraries.

In the future, when we are serving individuals at a distance, we are going to have to serve them as specific individuals and at OCLC we are making some efforts in that direction. Although, I must admit they are trivial efforts. Nevertheless, we are getting used to using the computer in an individual way and are looking forward in the decade when we can treat people as individuals rather than institutions or catalog cards as individuals, as we are doing at the present time.

We are striving to rid librarianship of the tyranny of uniformity that has been imposed on libraries. Such uniformity is sometimes called standardization, but this is just a pleasant way of calling uniformity by an attractive name. Uniformity is unattractive for institutions or for individual people, and the imposition of printed catalog cards, all looking alike and of catalog codes that are all alike, so that the cataloger has little or no decisions to make, is an imposition of restrictive uniformity. The best of all catalog codes, from

the viewpoint of classical librarianship, would be that code which the person applying it did not have to make any decisions at all, and this end has been the goal of classical librarianship in recent years. There is no doubt that uniformity has slowed rising costs, but as a technique of operation, it is most undesirable from the human point of view.

As I have said, OCLC's efforts to eliminate uniformity are trivial, but it is necessary to start at a relatively low level. The Center has a great many options for the production of catalog cards so that individual institutions can choose formats suitable to them. Also, the computer formats individual catalog cards on the basis of the information on the card so that each card is, indeed, individually formatted within the requirements of the institution to receive the card. OCLC supplies catalog cards in packs, in final form, ready to be filed in individual catalogs in individual libraries. The Purdue Library has a union catalog by author, and another catalog containing titles and subjects. Other libraries have split catalogs in which name and title entries are in one and subjects in the other. It is relatively easy for a computer to arrange cards for filing in split catalogs, even though catalogs may be split in various ways. An extreme example is an academic library in Ohio that has subject cards for individual authors in the name-title file and corporate entries in the subject catalog. The computer can cope with these arrangements.

In the future, it will surely be possible for computers to subject head and subject classify a collection, or that part of a collection that the user needs to have. In short, he will be presented with a personalized subset of the library.

Also, the computerized library of the future will respond to the user with a speed that the modern library does not. It has been known since the time of Aristotle that to do creative thinking you must have data available to you and that data is in memory. A library is an external memory and a user of a library transfers data from the external memory to his internal memory. If this transfer process does not work with adequate speed, the internal memory lacks data and creative thinking is hindered. It is this circumstance that causes a scholar to be annoyed when he finds he can only get the required information on inter-library loan and that it is going to take three weeks. Excited men can't wait three weeks. They obtain the information in some other way and if the library is going to be slow, users disregard the library.

Next, I will talk about some of the means for achieving the objectives that I have been describing. First of all, OCLC makes use of cooperation. As you know, the American

Library Association came into being a century ago because of excitement about cooperation. However, you will not find in library texts a definition of library cooperation, nor do I have one. However, there are three qualities that characterize cooperation.

First, a library cooperative can establish objectives unattainable by individual libraries. An example is the economic goal to reduce rate of rise of per-student cost to that in the general economy. To achieve this goal, it is necessary to employ a computer of considerable power. There are very few libraries in this country that can afford to have such a computer. It is only by cooperation that libraries can achieve access to adequate computation power that will enable them to establish this all important economic goal.

Second, cooperation involves getting something from someone else with whom you are cooperating in such a way that it doesn't cost the other party money. The unfortunate part of most library cooperation is that it does cost party B some money, and this is why cooperation falls apart.

A third characteristic of cooperation is its banding together to share financial and human resources for research, development, and operation. The Ohio College Library Center is an example of such sharing of resources, in that there are very few people trained to develop adequate and efficient library computer applications. Also, it has just been pointed out that sharing of a computer makes it possible for some libraries to have available considerable computer power even when their parent institution cannot afford a computer.

To achieve the objectives described above, the Trustees early approved of five subsystems: 1) a shared cataloging subsystem; 2) serials control; 3) a technical processing system; 4) remote catalog access and circulation control; and 5) a subject and title access subsystem for users. The Center is currently in the throes of implementing the shared cataloging system and it intends to implement the next two by January 1973. We will work on the last two sometime after that date.

The primary objective of the shared cataloging system is to make academic library resources throughout the State of Ohio available to the students and faculty in OCLC member institutions. To achieve this availability, we designed an on-line union catalog. There are cathode ray tube (CRT) terminals in each institution via which it is possible to query the central computerized catalog in Columbus. The inquirer can learn whether or not the book is available and where it is available.

To facilitate making the book available, we will be implementing a message switching technique for communicating interlibrary loan requests to institutions known to possess the item needed. In addition, requests can be made as to whether or not a book is available so that a student or faculty member can drive to the holding library to pick it up if he wishes.

Unfortunately, we talk mostly about the cataloging aspect of the system, and there are certainly times in which the major goal of making resources available is lost sight of. Indeed, we are going to lose sight of that goal right now, because I am going to start talking about cataloging activity.

There are three main products of the cataloging activity. There is cataloging using information that is in the system, cataloging that is inputting information into the system when it is not there, and the production of catalog cards for member libraries. When all OCLC subsystems are operational, I trust that it will be possible to discontinue additions to card catalogs, so that catalog access will be entirely by terminal or telephone.

Initially, we attempted to select a computer by using what might be called manual techniques, but we slowly discovered in the course of a year or more that it is impossible to choose a computer for an OCLC-like type of activity by using only one's mind. Hence, we decided to employ simulation, in which we built a mathematical model of the system and "operated" the system at peak load. Prior to undertaking the simulation, we felt that there were two avenues open to the Center; it could either obtain a large and expensive computer that would do the job, or it could simulate to identify a less expensive computer that would be adequate. A frightening result of the simulation was that the larger and more expensive computers would not do the job. Indeed, there were only three that qualified for the particular type of work required by OCLC. Subsequent to the simulation, a trade-off study was carried out that involved various characteristics such as cost, time required to program, and so forth. As a result of the simulation and trade-off study, the Center selected a Xerox Sigma 5 computer.

The Center staff obtained information on about fifteen different CRT terminals, and ultimately did a trade-off study on three. This study clearly showed that the Irascope LTE terminal should be the terminal of choice. It has proved to be satisfactory for manipulation of cataloging data, but so far has not been as reliable as we had hoped it would be.

The major intellectual problem which the Center faced four years ago was development of a file organization that would make possible swift retrieval of a single entry. Up until that time, research on retrieval from computer files had been concerned only with retrieval of all entries having

a common characteristic or associated characteristics. Research was carried out on truncated search keys and on file organization that produced information necessary for efficient file operation.

Cataloging records, most of which are MARC II records from the Library of Congress, are input sequentially in the catalog record file. Each record is indexed in an author-title index, a title index, and a Library of Congress card number index. The latter, of course, uses the Library of Congress card number. The author-title index employs the first three letters of the main entry and the first three letters of the first non-English article word of the title; the title index uses the first three letters of the first non-English word of the title plus the first letter of the next three words.

The median response time on the system is in the vicinity of two and a half seconds, and it is the organization of the index files that makes possible this swift response.

There are two types of cataloging: 1) cataloging using existing cataloging information; and 2) input cataloging. The first type of cataloging employs cataloging records already in the system. Approximately 75% of cataloging done is this type. A terminal operator in a library mimicking Library of Congress call numbers will enter the LC card number on the terminal and request display of the cataloging record. If the record is in the system, it will appear on the CRT terminal screen. The operator then compares the data with the title page and if it is the same book, makes a note of the call number in the book. Next, she depresses two buttons and cataloging is complete. That night catalog cards will be made in accordance with presubmitted specifications. This example is the simplest possible. There are, of course, many exceptions to this example, but the exceptions do not add greatly to the speed of cataloging.

Input cataloging is done when there is not an existing cataloging record in the system. When the operator has put in the LC card number and also tried the author-title and title index and cannot retrieve a catalog record, it is then necessary to do input cataloging. Input cataloging can be done directly on the terminal by calling up a workform and filling in the workform as cataloging is done. However, larger libraries prefer to do input cataloging on a worksheet that then goes to the terminal operator who calls up the workform and fills it in from the worksheet.

At the beginning of each use of the terminal the operator logs in with an identification number. The computer knows

from the number whether or not the operator is qualified to do partial or full cataloging. If partial cataloging is the qualification, each time the operator instructs the computer to produce catalog cards, the computer actually sets the record aside in a SAVE area. Subsequently, a fully qualified cataloger can log in, recall the cataloging from the SAVE area, revise it, and then have catalog cards produced.

On-line cataloging was implemented on 26 August 1971, with only cataloging using existing cataloging information implemented at that time. Also, only one library was first activated and it was the end of the first week in October before all libraries had been activated. Input cataloging was implemented in mid-October. At the present time there are approximately 165,000 records in the system, the vast majority of which are MARC II records from the Library of Congress. Of course, as time goes on, there will be more and more records input by Ohio Libraries.

The cost of catalog cards is not included in Membership fees. Last month, September 1972, the cost per card was 4.25¢, of which .33¢ is the actual cost of printing the card on the computer and .86¢ the cost of formatting and sorting cards. The rest of the cost is made up of all costs that can be identified, plus three-quarters of a cent for overhead. As already described, cards produced are in final form, alphabetized in packs, and ready for filing in specific catalogs.

The total budgeted cost for the system for the present year is $620,000. That roughly breaks down into one-quarter for personnel, one-quarter for computer, one-quarter for telephone lines, and one-quarter for terminals. The Center hopes that by the end of the second year cataloging will be being done at the rate of 350,000 titles a year, using cataloging information already in the system. This rate of 350,000 titles a year is equal to 1460 a day. There have been several days on which as many as 1200 titles, using existing information, have been cataloged on the system. Hence, it appears that the average of 1460 will be reached by the end of the second year, if not before.

We have also estimated that cataloging using existing cataloging information can be done at the rate of six an hour. One library reports that it is doing five an hour, another ten, and another fifteen. It therefore seems that the assumption of a rate of six an hour was low.

We have estimated that with cataloging being done at the rate of six an hour and an average of 1460 titles a day using existing information, that it will be possible for

participating libraries to make a net saving in cataloging activity. Indeed, those libraries that take full advantage of attrition because of increased productivity of staff members could make a considerable net saving. Moreover, costs in the future will not go up at the rate of costs in the past for, as is well known, cost for machinery tends to go down rather than up, as does cost of salaries.

It is too early to give a reliable assessment of the system, but any system on which 1200 titles can be cataloged a day must be said to work. Moreover, the system has operated throughout one week without having a crash, so that it can also be said that the computer and the programs are reliable. As already mentioned, the Irascope terminals are not as reliable as hoped for, but the manufacturer is improving their reliability. The file organization is satisfactory, as demonstrated by the swift response time. Moreover, the programs are efficient. The union catalog does increase the availability of resources and finally, the system is cost beneficial.

USER RESPONSE TO THE FACTS (FACSIMILE TRANSMISSION SYSTEM) NETWORK

Lynn R. Hard
Associate Librarian
Technical Services Division
McGill University Library

Probably most of you read the announced title of this paper and wondered what FACTS was, maybe even what a user response was. It should comfort you to know that you share a lack of knowledge that is well nigh universal. I am here to provide a small sip from the Pyrian spring.

FACTS stands for Facsimile Transmission System. It was an exploration into the use of telefacsimile equipment as a means of improving the communication of printed data within the State of New York. It ran from January 20, 1967 to March 31, 1968, and comprised a network of 15 libraries. It was funded by the State of New York and administered for that State's Department of Education by the Academic and Research Libraries Bureau of the Division of Library Development. The latter organization being an arm of the New York State Library.

FACTS was envisaged as a pilot study for a much larger system encompassing many more libraries and information centers. As an information network, FACTS was not a success; as preventive maintenance, it was a triumph. Only 5% of the time available for transmission on the equipment was used resulting in a per filled request cost of around $70. At the end of the project, the Charles Nelson Associates, Inc. of New York and myself filed autopsy reports and FACTS was quietly interred. That was some three eventful years ago and one might have expected that it would have been left to lie in peace. However, within the past five months, I've delivered two papers and had a number of requests for articles on FACTS. FACTS, although appearing to me to be the self-same disaster I knew, has, for some reason, suddenly become respectable. It reminds me of Woody Allen's remark about seeing his ex-wife on the coast and not recognizing her with her wrists closed.

I think perhaps it might be well to cover some of the reasons that FACTS is indeed still, or seems to be still, valid today. One of these is the size of the operation. It involved 15 libraries in a network reaching from New York City in the south to Plattsburgh in the north and from Patchogue in the east to Buffalo in the west. Altogether 38 facsimile

receivers and transmitters were used, along with 16 TWX consoles, a major switching installation, and 24 transmission circuits with terminals. FACTS still represents the largest library telefacsimile effort ever essayed. From the beginning it was felt that the pilot portion of FACTS should primarily test the system and organizational structures required rather than the technical performance of the facsimile transmission equipment which was, to a great extent, already known. In other words, FACTS was an experiment in networking, not in telefacsimile. For this reason, the pilot took the form of a full panoplied system rather than just a station to station hook-up.

The geographic extent of FACTS was also important in ascertaining the cost, scheduling problems, and reliability of an extensive transmission line layout as well as the administration and maintenance difficulties engendered by the distances involved. Thus, FACTS went beyond the microcosm concept of most pilot experiments and provided valuable lessons in the operation of large scale networks. The lessons were learned in the only way possible: on an actual operational basis. I must say here that the experimentation on the magnitude of FACTS was made possible only through the willingness of the State of New York to explore its information transfer capabilities and to generously fund those explorations.

The duration of FACTS is another aspect of its validity. Very simply, FACTS was in operation much longer than most other projects of a similar nature. This was due again to the emphasis on the network rather than the equipment and, also, to the extensive funding which made possible the fairly longer term leasing of equipment and lines. Other pilot efforts often rely on equipment and/or lines supplied free of charge by the vendor for the purposes of the project. Necessarily the duration of these arrangements does not normally exceed 90 days. Because FACTS ran 15 months, and was for that time very extensively monitored, valuable information on the day-to-day operation of the network was gathered. The length of time covered by the record keeping allowed the statistical analysis to overcome mechanical malfunctions, peak and slack periods, operator error, and user indoctrination and other such difficulties which sometimes badly skew the data derived from shorter experiments.

Another interesting aspect of FACTS was the fact that it had a large variety of users. Included among the FACTS stations were: one major state library, two major university libraries, one medium sized university library, two small college libraries, one large medical library, two large public library systems, three medium sized public library systems, two small public library systems, and also the

New York Public Library system, which is at once a large public library and also one of the great research libraries of the world.

Extending even the range covered by the previously listed station sites was a connection between the FACTS network and the State 3R program. The 3R (Reference and Research Library Resources) program was, and is, another activity administered by the Academic and Research Libraries Bureau Division of Library Development. It comprises nine 3R organizations based on geographic groupings. The object of the 3R groups is to coordinate and improve the availability of reference and research data within their specific areas.

All types of libraries are represented in the 3R councils. The responsibility for the operation, publicizing, and copy delivery within FACTS rested mainly with the local 3R groups. This meant that potentially any library or library user within the State of New York was a FACTS patron. For example, the station located in the Mid-Hudson Public Library System Headquarters in Poughkeepsie received its heaviest volume of traffic from Vassar College and the nearby IBM Research complex. The State University of New York at Plattsburgh installation serviced the Clarkson College of Technology, the Agricultural School at Canton, the local community college, the Clinton, Essex, Franklin Counties Public Library System, etc. Therefore, FACTS provides feedback on the volume, types of requests, and the performance expectations of the professional community, industrial researchers, the graduate student, the undergraduate, and the public library patron. Here again is invaluable data of an almost unique kind due to the depth and duration of the FACTS monitoring effort. Monitoring is important. Often other interlibrary loan systems such as the New York State Interlibrary Loan System cover as great a variety of users, but because interlibrary loan procedures are quite familiar to most libraries, such systems are not monitored in great depth. Since FACTS was unfamiliar and a pilot project, it was necessary to keep extensive statistics. FACTS was also experimenting in almost instantaneous delivery which is another interesting aspect of the operation. We never achieved it, of course, but the statistical gathering with an instantaneous delivery objective as opposed to the usual batched mail delivery is quite interesting.

These are the basic reasons for the continued validity of the FACTS experiment. There are others, of course, such as vendor competition, but they are not directly concerned with the user and will not be discussed in this paper.

With this as an overview, I would like to go directly to some of the things learned from the FACTS project about users and networks and about planning networks for users.

COSTS

First of all, FACTS was a failure because it cost too much. Not because it cost a lot, but because it cost too much. The product was not worth the price. The product, the facsimiles themselves, was admittedly inferior. They were, to some extent, expected to be. It was recognized prior to the selection of the facsimile and transmission equipment, that a certain amount of image resolution would have to be sacrificed in the interests of speed. This sacrifice was predicated on: (1) the expectation of a high volume of use, (2) a commitment to a maximum of 24 hour turn around time, (3) staffing hours at the FACTS sites, and (4) the economics of wide-band transmission media. FACTS was planned on a worst case basis, that is to say, a maximum volume of use which, if not prepared for, would cause the network to break down. As things turned out, I sometimes wonder if we didn't have our cases reversed. We had very little volume indeed. When maximum use is anticipated, the transmission time per page becomes vital.

A telefacsimile configuration capable of successfully transmitting and reproducing six-point type, which is the type used in footnotes and mathematical symbols, utilizing a normal 3 kc band width telephone circuit required about ten minutes to send an 8 1/2 x 11 page. A configuration with only 8 point type (normal print size) capability over the same circuits required only 5 1/2 minutes. Therefore, on the first setup, a periodical article of ten 8 1/2 x 11 pages in length, would require 1 hour and 40 minutes to send, exclusive of the operator time. The second would require around 1 hour total elapsed time. The only way to decrease transmission time is to increase the circuit bandwidth.

Since the premise for the utilization of facsimile transmission was instantaneous delivery of copy, it was felt that any factor likely to extend the transaction past 24 hours should be avoided. Longer per page transmission time would, of course, be one of these factors. Now, although the mechanical paraphernalia for FACTS was available for use 24 hours a day every day, the people required to run it were not available anywhere near that amount of time. In fact, only 22.8% of the total available time was actually usable. In other words, 23% of the time staff was available to run the facsimile equipment. The facsimile transmission manufacturers assured us that their equipment would receive without need of attendant staff. Actual experience showed that it was possible to leave the machines in a receive mode unmanned all night if you wanted to find the next morning 20,000 yards of unrolled toilet paper with a thin red line down the middle. Also, as you have no doubt observed, the problem of getting someone to stay up all night transmitting, presents some small difficulties. Again, in this situation, the per page

transmission time becomes paramount. As was noted before, the only method then available for reducing the transmission period was to send over a larger bandwidth media. Some data compression techniques have been introduced since FACTS was eliminated, that have marginally reduced the transmission time. The cost of large bandwidth media was too high even for FACTS. The transmission circuits decided upon were 4 kc, buffered telephone circuits especially dedicated to the use of telefacsimile. Although the abilities of the final network were less than had been desired, it was felt that the majority of the items that would be sent would be in 8-point type and that this equipment would be suitable. This hypothesis did not prove to be correct. The equipment selected had a major drawback as did all equipment then and now.

TELEFACSIMILE

Only single sheets of copy can be transmitted. All telefacsimile equipment functions in this way because the industry is geared to business requirements which are essentially typed, separate sheets. This meant that pages from bound volumes had to be reproduced before they could be sent, introducing another degradation of the image. This problem also had been foreseen and as part of their contract fulfillment, the two telefacsimile vendors had to submit a design for a transmitter that would copy directly from bound volumes.

Anyhow, getting back to cost, people couldn't read the stuff they were getting. So, if it cost anything, it cost too much. Because the facsimiles were poor, the volume suffered. The volume of use was low for other reasons, but we'll get to that later. Low volume has a disastrous effect on a network like FACTS. The cost factor in data transmission networks, whether they be facsimile, teletype, or telephone, or anything else, is of two kinds. Both are tied to utilization, but in an entirely different way. One system functions over leased or purchased communication media. In systems of this sort, the overall costs are nearly constant, but the per request cost is reduced as utilization goes up. FACTS, of course, was this kind of system and the $70 figure per request is due to low utilization. For example, the total equipment and line cost per available system hour in a 24 hour day, every day, was 28.9¢. The per hour cost based on staff availability was $1.26 but the per hour cost of actual utilized transmission time was $24.93. Those are only line costs and equipment costs. This does not take into account personnel and other expenses that FACTS bore.

The second kind of system utilizes transmission media for which only the actually utilized time is paid. Therefore, higher utilization means higher cost, such as in the TWX network. The more times one calls or, as with your telephone,

the more times you use it, the more it costs. If you don't use it, it doesn't cost you anything. The per use cost of such a system is very considerably higher than the per use cost of a leased system when high volume of transactions is reached. Therefore, higher utilization means higher costs. Obviously the first system is more advantageous for a high volume operation. Conversely the application with an expected low volume of use should employ the second system. The accuracy of this premise is amply demonstrated by the experience of FACTS.

Another aspect of what was learned vis-a-vis the user in FACTS was the volume of requests generated. The stations were, by and large, oriented to public libraries and public library systems. There were five academic stations altogether, two of which were Columbia and Cornell. Understandably Columbia and Cornell did not borrow much. The tabulation by Charles Nelson Associates, who produced a very good report on the FACTS operation, may still be available from the New York State Library. They tabulated requests by types of users. 70.5% of the requests on the FACTS network were from academic libraries, 21.9% were from public libraries, 6.1% were from industrial libraries, 1.4% from others. It is clear that FACTS, in a way, was doomed from the beginning when more academic sites were not included. It is also important to include have-not libraries. It's not enough just to get an academic library. Obviously Columbia and Cornell are going to supply, but they are not going to demand. FACTS' largest volume of requests came from the Plattsburgh installation in the northern part of the State, which is a small S.U.N.Y. campus library. Plattsburgh obviously had the need, they had a captive audience, they had people who are constantly doing research, but they did not have the items to fill this need. FACTS had too few of these stations and, therefore, did not achieve a high utilization figure. Frankly, the Midyork Library System in Utica just has no need for this kind of service. Most of the people using it were in the public sector, they were not in school, they didn't have a constant research obligation, and, therefore, their need was a casual request. As I speak this, it seems that we should have foreseen this. But there were other factors involved. The 3R groups were very closely allied to the public library systems and the Division of Library Development, which was the parent organization for both operations, and also very involved with public libraries in the state, therefore it was felt that they must be included.

Still another interesting aspect of the user-FACTS relationship was the time requirement. We began the experiment with the idea that the only reason to install telefacsimile is to achieve instantaneous delivery. Therefore, a turn-around time of 24 hours was established as a goal. Various individuals claimed that the user would not be interested in this kind of delivery and therefore 24 hour delivery should not become a planning parameter. The argument that carried the day

was that FACTS should try to achieve as much as possible, regardless of what the user would accept. In fact, the users were uninterested in receiving material in 24 hours. The Nelson Associates polled the users and asked them what periods they thought appropriate for delivery of items. Out of 772 respondees, 288 voted for 5 to 10 days (this is the largest percentage), only 5 voted for the 24 hour period, and 48 people said that 20 or more days would be completely sufficient for their needs. Which points out that FACTS was quite likely reaching the wrong people and that the library staff administering it at sites did not properly understand the potentiality and the reasons for FACTS. This has to be my fault as I was responsible for explaining and promoting the project. Another problem in delivery requirements was the geographical size of the State of New York. You can drive anywhere in the State of New York, as long as it is not in the depth of winter, in 8 hours. Therefore, trucking service would have been quite sufficient for delivery within the state. This is a problem anywhere one installs telefacsimile. You must have a large enough area to make it a valuable operation. If not, it is much too expensive.

The final problem with the time requirements was that they were never met. This was due, to some extent, to the equipment itself: line problems, machine problems, operator problems, but it was also due to the organization at the receiving sites. It is interesting to note what happened to the facsimiles after they arrived at the sites. 40.4% of them were picked up at the site, 39.7% were mailed to the requester (that could have been done from the originating library) and then a number of the others were delivered by library trucks which went someplace every two weeks, etc. It became a little bit ridiculous. RIDICULOUS being the key word that leads into quite likely the most important aspect of the FACTS operation: the organization of the project.

We began the operation at the Academic and Research Libraries Bureau making certain guarantees -- guaranteed quality, guaranteed time of delivery, etc. The entire project was funded with state monies -- entirely funded. The state paid each time an item was searched by one of the libraries involved, whether or not it was found. If it was found, an additional fee was paid. New York also funded all the equipment and the operators to run the equipment plus paying all of the line costs, etc., paper, forms, everything. Therefore, we had a central funding operation with central guarantees. But, the project was not managed centrally. It was more on the lines of the Colonel Sander's Kentucky Fried Chicken network. The sites received a franchise and there wasn't provision for control over what went on in those franchise points. In a pilot program where guarantees were made, a more cohesive organizational structure would seem to recommend itself.

The library staff and user attitudes to FACTS should be commented upon. Publicity for a project like FACTS is extremely important. The publicity is essentially of two types. The first type, and the most important type, was that aimed at the library staff manning the FACTS sites. The network and the site library administrators had to convince their staff that the best way to fill certain kinds of requests was through the FACTS network. It was important that no mystique grow up around FACTS. It should have been just another way of filling a request and therefore, a significant percentage of all interlibrary loan requests received in the sites should have been routed through FACTS. This was not done. Possibly, in the context of an experimental project it could not have been done. But, indistinct areas of responsibility were also important in this failure.

Outside publicity is the next sort of publicity one should be interested in, but it must be geared to whatever your network is offering. FACTS publicity was much too diffuse. It didn't reach the right people. More than a handout was needed for this kind of operation. This is especially true if one is dealing with public library sites because a captive audience of the type an academic institution represents isn't present. Therefore, libraries and organizations in the area of the FACTS site must be found that are likely to have a body of users and they must be convinced to utilize the network. Personal contact was a necessity. Someone had to go out and convince these potential customers that FACTS was offering a good service. Since volume was vital to the operation, volume should have been recruited. Again, this was not done, except in a few isolated incidences.

Personally, I feel that the handout and poster type of promotion, which predominated in the FACTS system, is fine if you've got a low volume system and you just want to inform library patrons that this service is available and maybe get a write-up in the newspaper. It is more a public relations activity than a generative kind of advertising. I should mention at this point that these remarks on FACTS publicity are almost entirely hindsight. I must accept the major part of the responsibility for these failures. I can only hope you will blame it on my youth.

I think the last instance of user interaction with FACTS that is interesting is the statistical side of it. FACTS was, of course, a pilot project and we tried to garner every possible kind of statistic you can imagine. Of course, all networks should have an in-depth statistical analysis done, because networks are by their nature totally user oriented. The network does not function until a user comes in and says "I want" something. Because an information network functions in an

on-line mode, whether it be automated or not, the pressure is considerable. If statistics are not well kept the management operation is probably going to be based primarily on reacting to crises. The most rational approach to a solution is difficult to arrive at because the appropriate data is not available. It is important to keep the right kind of statistics, of course. Proper statistics must be able to be broken down to the level of the smallest, but still significant, functioning part of an operation. Unless this is possible, responsibility for poor results will be imprecise as will the solutions stemming from the statistics.

In FACTS, in networks, and in operations such as reference and circulation, one must also monitor the user and his response to the service provided. Is there some particular aspect that he doesn't like? Is there some portion he likes? Perhaps a base assumption on your part is a gross assumption as far as he is concerned. All this statistical data must be monitored on a continual basis. If it is not, it is useless. In user statistics, which are often of the suggestion box type, one must be very careful though to look beneath what is said to what is meant. Responses of this kind must necessarily be geared to symptoms rather than causes. They must be reduced to their lowest common denominator and solutions introduced at that level.

Now, I am going to try and play Maryann's networking game on maybe a little broader scale, and using some of the things we learned from FACTS and some other things I have learned from various places, try and construct a couple of networks based on various premises.

Case 1. Let us assume that the libraries of a state, say the size of Indiana, wish to improve interlibrary loan service and utilize the resources of the state more thoroughly for the benefit of their patrons. They wish to establish a network. What steps should be followed in order to establish this network and what should it look like when it is finished? I would recommend that the first step be a survey of the kind of volume that will be encountered in this operation. Also: How many users are you going to get? What types of users are they going to be? Where are they going to be located? From this data, possible peak and slack periods should be identified. The next step following the volume survey is to establish guidelines on who is going to be allowed to use this system, what sort of material is going to be handled in the system, and other smaller items such as the cost of xeroxing and all the other impedimentia that falls into the operation. The next step should be a resource survey. Who has what, where? It must be realized that the network will depend heavily, but not entirely, on Purdue. Once it has been decided who has what, a referral pattern must be established. Where do you go with the request

you have in hand? Who is most likely to fill it? Where do you go if they don't have it? and that sort of thing. How many times do you refer it? The number was four in FACTS. I think only 25 or so requests actually got through to the fourth referral, so the depth necessity was questionable. Of course, FACTS only had about 3,200 requests.

The next step - and I feel this very strongly - is that you must have a reimbursal program. The libraries that are filling the requests must be paid for their efforts because in most systems of the type we are describing one or two libraries are going to handle most of the load. These are the "have" libraries in the system and if the network is viable they just can't handle the load without increasing staff. I think that cooperation without recompense cannot be expected, and we in the FACTS and NYSIS operations did pay people for searching a request and paid them extra if they found it. I think the money should come from the state or federal government or some outside body if possible. If not, it would have to come from a fee structure for the network itself that each of the members would have to pay. It would be paid on a scale most likely based on the findings of the previously discussed volume survey.

On the topic of information transfer, I think in a system like this, because it is quite likely to be low volume, the request should go by TWX. It should also go directly, without a switching center. A referral pattern would establish where requests should be submitted. Network reimbursal will pay those libraries filling the requests. The size of the state of Indiana would tend to make a switching center unnecessary. I think that the delivery of the items should be by truck. Again, Indiana is a small area and certainly it would be cheaper, and probably more efficient, to fund a statewide trucking system than anything as elaborate as a facsimile system. I am certain a truck could make the circuit in 24 hours. Again, I think this should be funded by the state, or the network.

As for the organization of this kind of operation, I think there should be a network coordinator at some central location. Probably the state library. This person should do the planning, should be responsible for monitoring the statistics kept, and should be responsible for accounting for reimbursement funds. This person should also have the power to cancel library memberships if sites are not living up to the obligations of the network. Otherwise, the person should have no power at all. In a network, as described, I think that perhaps the franchise operation is best. If each of the libraries in the network cope with their own operation, live up to the guidelines, and follow the referral pattern, then a highly centralized administrative body is unnecessary. Therefore, a lot of overhead money would not be spent in this kind of an operation. Given the organizational pattern, no guarantees should be made.

Publicity should consist of intensive library staff orientation, handouts, posters for the public, etc. The publicity should go no farther than that. Essentially what the network is doing, is not looking for new business - at least it shouldn't be - but trying to improve what's already occurring. Internal improvements should be advertised to the staff, first and foremost.

Case 2. Let's say the Association for Research Libraries wants to establish a text information transfer system among its members. By text, I mean other than cataloging data. In other words, the actual text of a publication. The first step in this sort of operation should be to establish guidelines. Whereas in the other instance we had to ascertain what the volume was going to be. Here the volume is obviously going to be enormous and so loses priority in the planning stage. One has to decide what is going to be handled, and at what level? Honor students, undergraduates, graduate students, faculty? Also, those organizations eligible to submit requests to the Center must be established. Requests might come directly from an ARL member but possibly a body such as was described in the first example would be designated.

After establishing the guidelines on what kind of clientele is to be served, then a volume survey for staffing, for on-line record keeping, the size of the physical operation, etc. has to be considered. Next, a resource survey should be done as in the earlier network and, following that, a referral pattern survey. The surveys should probably be made so as to create large regional resource areas rather than one massive continental one. Once the referral pattern is established, I think what central store of data is going to be at the core operating base should be ascertained. The network should have a central store of data that can handle certain types of heavily requested items both easily and directly.

From the resource survey and the volume survey, it should be decided if reimbursement is necessary. Perhaps it is not, in this large an operation. The great majority of the network expenses will be for centralized operations. The fee structure of the parent organization plus any federal funds available should cover both the central and peripheral costs. And theoretically, ARL members are equal partners. Therefore, libraries are going to be borrowing and lending at similar rates. The inequities of the first network should not exist.

Now to the information transfer aspect. There should be a central store of tests, probably journals, documents, certain services, etc. available on video tape. I think that a video-

file type system has great potential for this sort of function. The store should be on-line to a computer-operated switching and referral system. A medium sized computer with considerable I/O capabilities should be a sufficient hardware configuration. Requests would be transmitted by remote consoles at the ARL sites. They would go directly into the central computer which would either go to the video tape core storage for the text or contact referral sites for material not in that store. If the request falls within the guidelines for items eligible to be videotaped, a video image will be switched from the referral site to the requester console. So, if Purdue asked for and received a medical article and it came from the central store, it would be transmitted directly from video tape. If it was filled at a referral site, they would have to televise the article itself and send it through the switching center to the requester. The requester would then make a video tape record of the item and produce hard copy for the patron. Wide band facilities would, of course, have to be used for any television transmission. An operation of this nature is of national prominence and I think funding could be obtained for it.

If the item was not suitable for video, it would be delivered in the most efficient manner possible. This might be mail, truck, air freight, etc. depending on the situation and geographic relationship of the two sites.

I'd now, briefly, like to go into how the computer would refer requests. Hopefully, the whole process would be done within the computer. A referral pattern would be set up, the request would come in coded for the location that it is coming from, the computer would assess whether the item is available in the central store on video tape or not and then automatically send it if it is. If not, it would go to the referral look up table that it has in its memory, find out to whom it should go for the material, and immediately transmit a request to that site. It would then hold that request until it got a response -- yes, we have it or no, we don't. Therefore, the transaction would be almost entirely within the computer on this kind of operation, minimizing clerical staff needs, maximizing programming and systems analysis.

The organization of this operation would need as a network director a very high level administrator with very strong powers. He would be in charge of the management, the fee structure, and almost everything else in the operation. He would have a staff including, at the very least, a PR man, a computer director, staff for programming, systems people, and a business manager. And in this situation, guarantees should definitely be made. The director should be held accountable by the ARL administration for following through on those guarantees.

Publicity is important. Again, there must be very intense library staff indoctrination. Personal interviews are very necessary with potential user groups. Probably, if this system ever got into operation, network representatives would be going out and trying to get money from GM and IBM and other people to help with the financing. In that case, someone would have to convince them that this is a valuable service for them. Probably, presentations would have to be made in various cities explaining the program, passing out elaborate brochures, and that sort of thing. Also, representatives would attend conferences and make presentations explaining what is being done, and hopefully, appearing in print frequently.

INDIANA TWX NETWORK DISCUSSION --
OPERATIONAL ASPECTS

Margaret D. Egan, Head
Reference Division
Indiana State Library

I am glad to have this opportunity to talk to you for a few minutes about the operation of the Indiana TWX network. We think it has tremendous potential for improved library services throughout the state. Of the 241 public libraries in the state, 176 are participants at present. In addition, the four state universities, the Indiana University Medical Center and two special libraries -- Miles Laboratories of Elkhart and the Fort Harrison Library in Indianapolis are participants. The Indiana State Library's TWX installation is the central node of the network.

With this brief information in mind, let us consider some of the ways in which the State Library is helping the participant libraries.

The State Library makes available as much of its material as is possible. However, it is necessary to limit to use in the library certain rare, irreplaceable, or fragile items.

It also helps the participant libraries by using its comprehensive bibliographic collection to verify the books and periodicals requested.

In addition, the State Library provides supplementary reference service to the libraries in the network, which includes verifying and duplicating materials as well as searching for items in other libraries via the TWX.

The State Library has compiled a union card catalog that provides locations in which books previously requested by the network libraries have been located. Further, the union list of serials in Indiana libraries and other union lists are valuable in locating periodicals throughout the state.

Service to the state's libraries could be improved through the strengthening of the Indiana State Library's collections. However, the present collection is fantastic because it represents a continuity that has been growing for 125 years. The State Library has a responsibility to back up the reference collections in the public libraries.

I would now like to examine some of the ways in which the other libraries are helping the State Library. Generous inter-

library loan policies is one of the major ones. It is particularly helpful to have the four university libraries in the network. We have access to the highly scientific and technical collections at Purdue, and to the excellent collection of Indiana University in the humanities and Slavic languages and in many other areas. In addition, the educational material that is available from Ball State and Indiana State Universities provides a wide range of materials.

There are many ways in which service to the people of Indiana can be improved. It would greatly increase network efficiency if the libraries would increase their efforts to verify specific titles before a request is forwarded to the State Library. Complete citations should include the author's full name, the complete title of the book, the date, place of publication, publisher, and edition. For periodicals, a complete citation should include the title of the periodical, the volume number, dates, place of publication, the author, title, and the page numbers of the article desired. The source of the citation would many times provide a date framework to work within.

It is obviously not practical to suggest that every library in the state have all the bibliographical tools, but each library can help by gradually increasing its collection. An additional way in which service can be improved is if the TWX libraries will satisfy the satellite libraries' requests from their own collections whenever possible.

Careful proofreading of messages transmitted to the State Library would eliminate errors and lessen search time. When dealing with subject requests, specific information and detailed explanations would convey more clearly the subject area concerned.

If it were possible to have a wider distribution of the Indiana Union List of Serials among the TWX center libraries, numerous requests could be filled by direct application to the library holding the specific periodical. In addition, direct application to other network libraries for such things as fiction, textbooks, and children's books, which for the most part are not available from the State Library, would decrease the work load in that library.

In conclusion, inadequate as our statistics for network operation have been thus far, they do show that the Indiana State Library receives two or three times the number of requests that other libraries in the network receive. Unfortunately, the present staff is inadequate to handle a work load that large. Therefore, it is essential that the State Library staff be increased.

If we all believe, as Miss Duggan so aptly phrases it, it takes total commitment to make a successful network, we must find some way to provide additional help for both the Indiana State Library and the TWX center libraries. We have to reevaluate the entire program with emphasis on new ways for financing TWX activities.

INDIANA TWX NETWORK DISCUSSION --
FINANCIAL AND ORGANIZATIONAL ASPECTS

Abbie Heitger, Head
Extension Division
Indiana State Library

The Library Services and Construction Act, Title I, funds have been supporting the Indiana Teletype Network since fiscal year 1966. In the first year, the public library teletype centers, the four state universities, and the Indiana State Library sent a total of 11,490 messages at a per message cost of almost $ .44. For those who would like to be exact, the amount was .4381. This was exclusive of administrative costs and machine rental charges. As the network grew in 1967, satellites, i.e., telephone affiliated libraries, were slowly added. Messages increased to 16,951 and the per message cost increased to a little less than $ .48, the exact figure being .4784. Including administrative and machine rental charges the cost per message was $2.09. The network total cost for 1967 was $35,448. By fiscal 1970, more satellites had been affiliated, and the messages totaled 26,181 in that fiscal year. The cost per message was almost $ .56, or to be exact .5595. With all administrative and rental charges included, the cost per message was $1.92. The total cost of the network in 1970 was $50,358. In 1971, from the figures available to date, 30,979 messages were sent at a cost per message of $1.71. The total cost of the operation in 1971 so far has been $53,040. Copies of the annual reports are available from Mrs. Jewell Hansell, LSCA Title Coordinator, Extension Division, Indiana State Library.

Statistics sometimes can be misinterpreted and they are time-consuming to compile. They are, however, frequently necessary, and particularly so in accounting for federal expenditures and assessing the effectiveness of a program.

In the TWX use statistics summary report for August 1971, 1,659 requests were made and of these 71% were filled. Of the 1,188 requests that were satisfied, the public library teletype centers filled 16% of them and 81% were referred to the State Library. In a breakdown of the 81% of the requests referred by public library centers to the State Library, 15% of these were filled by university libraries, 27% by other public libraries, 1% by special libraries, and 38% by the State Library. Copies of these monthly reports are also available from the Extension Division.

The Indiana University Medical Center is an integral part of the network. Messages to the Center from member libraries

of the network are paid from LSCA funds. Outgoing messages and photocopies for the Medical Center are paid by a Medical Center grant.

There have been many problems associated with the development and administration of the network. As mentioned earlier, Title I, LSCA funds are being used to support the major costs. There have been small special grants from Title III, Interlibrary Cooperation. These grants were made to the State Library, Indiana University, and Purdue University to facilitate operations due to their increased work loads. A second teletype machine has been installed in the State Library and it has been possible to provide for additional personnel.

A policy manual has been compiled which we prefer to call "Guidelines". Some of the guidelines have been mentioned pertaining to library resources, utilization and limits, and interlibrary cooperation. In the guidelines, each participating library is encouraged to adopt and practice as liberal a policy as possible in interlibrary loan and reference activities with the other libraries participating in the project. It is suggested that libraries screen requests and fill them from their own collections if possible before any are referred. I use the word suggested because public libraries in Indiana are governed by autonomous library boards having the power to levy taxes and to manage the affairs of the library as they see fit within the confines of the public library law of 1947.

The teletype network does not relieve any participating library of its responsibility to develop its own resources and services to the highest possible level. It is not expected that libraries will loan materials in active demand, neither are they expected to loan current periodicals and audio-visual materials. Photocopies of periodical articles may be borrowed or purchased depending on costs as determined by the lending library. The four state universities may teletype each other directly for materials.

The safety of borrowed materials is the responsibility of the borrowing library and the borrowing library pays transportation costs both ways. The loan period is determined by the lending library. It's generally three weeks, and does not include transportation time. Renewal requests are discouraged. The lending library is expected to notify the requesting library promptly if the material in question is not available and why it is not. The lending library is asked to send notification to the borrowing library that the requested item is being sent. These are a few of the more important guidelines of the interlibrary communications project in Indiana.

We will continue to record data about the network and we will continue to examine the facts gathered. Dr. Don Tolliver of Purdue University is shortly to begin a pilot study of the teletype network to provide more information for evaluation. A sampling of teletype center libraries, satellite libraries, and non-satellite libraries will be made. This information will give us a clearer picture of network operation and provide a basis for determination of future directions.

Before July 1, 1972, Indiana, as did other states, submitted to the U.S. Office of Education a long-range program for library development. The teletype network in Indiana is certainly a part of that long-range plan. Miss Jean Jose started the plan and is now being assisted by Mrs. M. J. Smith. Mr. Ray Ewick, Assistant Director of the State Library, is coordinator of the plan for development of area library services in Indiana. We will look toward coordination of the teletype network with area development.

On the whole, the Indiana Interlibrary Communication Project is doing well. It has encouraged interlibrary cooperation and increased usage of interlibrary loan and reference services. It has been one of the major factors in the maximum utilization of Indiana's library resources and it is assisting in defining the limits both quantitatively and qualitatively of library resources in Indiana.

The network has been successful due to the cooperation of the librarians and the library trustees in the participating libraries. There is an awareness among librarians of the needs of patrons for library materials and an awareness of state-wide responsibility to provide the materials needed. It has often been said that money does talk, but the key word in Indiana during the years of the teletype network has been and will continue to be "cooperation".

HOW DOES THE NETWORK SERVE THE RESEARCHER?

Irwin H. Pizer
University of Illinois at the
Medical Center, Chicago

Probably the most striking thing about networks which has been demonstrated at this conference is their diversity, and it is clear that not all networks are intended for all people. The problem with discussing the network user is largely that of trying to identify him, for depending on who he is and which network he is using, he will have differing expectations and needs, as well as varying goals.

A number of networks have been discussed which relate primarily to the library and the librarian as the user. Networks which improve library housekeeping operations and provide management information too, of course, serve the researcher in a vital, if indirect and inobvious (to him) way, and they are not less important for that reason. Network services to the researcher who is a librarian have, then, been covered to some degree already, and will not be further dealt with here.

In discussing any computer-oriented network and its services, regardless of the user group to whom it is directed, one is conscious of the key element in the system. It is neither the hardware, the software, the users' urgently expressed needs, nor any other of a host of parameters which govern the services that a network can provide; it is only the data base. The other factors may make a network better, and may affect the researcher in relation to how the information comes back to him, and even what information comes back to him--that is, more or less of the data base, and what can be done with the information stored, but unless useful information is in the system, the other factors are meaningless. To put it another way, unless the information contained in a system is useful and can be manipulated effectively and efficiently, the network will not find researchers who require anything of it.

This is not to say that all networks need a data base as an integral part of them, for we know that in a TWX network, for example, the data base is external to the system and is supplied at the man-machine interface. Nor do we labor under the misguided belief that machines are necessary for networks either to be established or to operate efficiently. The "Invisible College " provides a wealth of information for the researcher, which is unavailable in many cases in any "published" form, merely by human interaction. It has operated at this meeting just as it does at any other professional conclave.

The computer mediated network, however, seems to hold the greatest hope for future development, primarily because of the things that a computer can do well: repetitive tasks like generating copies of information, searching files, comparing data in one file with that in another, etc. Unfortunately, there are few on-line networks in operation which search large files and, outside of the government and perhaps some large industries, there are even fewer which search text. One reason for the latter is that the cost of storing text in an on-line system is enormous, the file construction problems within the machine system are formidable, and the techniques of getting in and out of the file are complex. Furthermore, the hoped-for developments in inexpensive storage devices for extremely large files have still not resulted in an operational machine. In addition to these problems are those in the area of text input with the attendant costs.

We have also found that the problems of constructing a system which the researcher can use unaided by a professional input analyst are considerable, and it may be that they are not worth the effort to solve. One of the hazards of a user mediated system is that if the user does not formulate his question properly (as far as the system is concerned) he gets a poor result. Consequently, he feels that the system is ineffective and tends to reduce his use of it, especially if the bad experience is reinforced on repeated trials.

One of the primary services which a network must provide for the researcher then, is an educational program which will train him to interrogate the system effectively, if he wishes to do so. Another service is the provision of trained search analysts who can translate his question from his natural language, which may, of course, be quite technical, into the language of the system (or generate the necessary coded format for rapid transmission of the request, etc.). Although this is merely a version of the "reference interview" carried a step further, perhaps, it is still the technique which is most likely to assure success and user satisfaction with the network, and will probably go far toward preventing dehumanization of library services.

Looking at the systems which are in operation today, one finds that, given the exceptions already noted, the data base consists of bibliographic information and perhaps some abstracts, but not actual text.

This is not a small achievement in itself, and I have not meant to denigrate it. There is a great deal of service that can be provided by the system that contains bibliographic information if the appropriate programs exist within the network to manipulate it.

The researcher should be able to regard a network as an idealized library. That is, the services which he receives should be those he expects, or comes to expect from the perfect library. In short, the network should enable us to come closer to the "black box" concept of a library. In this scheme, the researcher comes to the library (not necessarily physically--incidentally, have you ever thought seriously about the fact that we penalize those users who come to the library in person by making them do their own work, but if they contact us by phone or TWX, etc., they get a whole range of services which are otherwise unavailable and we move a little faster to answer their questions?), states his information need succinctly, in his terms, and receives the appropriate information in a form which he prefers, and may specify. He needs to know nothing of the internal operation of the black box, any more than we need to know how a television set works electronically in order to use it. In addition, the black box can keep a record of his information needs and interests and in the future provide pertinent information before he requests it, or even before he knows that it exists. This change, from passive to active service, can be accomplished perhaps even as a by-product of the system.

In short, the services which the researcher requires of the network are awareness, availability, ease of interaction, convenience of use, location of information and provision of documents. Both system and user need a feedback mechanism.

To make clearer the workings of such a network, one has only to imagine a system which combines our TWX capabilities, NELINET, the Ohio College Library Center, The Ohio State Circulation System, and then adds a data base of secondary sources relating to journal literature, i.e., indexing and abstracting services, plus a delivery system (FACTS or better).

Such a network is not as far fetched as it may seem and New York took the initial steps toward the creation of this type of network beginning in 1966. By 1968, when the SUNY Biomedical Communication Network became operational, it had achieved a number of steps necessary to tie all of these pieces together.

When the Network was being designed, one of the requirements presented to the hardware manufacturers was to provide a system that was capable of handling a large number of terminals simultaneously and also had the capacity for considerable growth. Unfortunately, we were doing our hardware selection some years before Mr. Kilgour, and we did not undertake mathematical simulations of network load or of core capacity, or response time. We were, consequently, at somewhat of a disadvantage when evaluating the proposals received.

The vendor whom we selected assured us that the proposed system could handle hundreds of terminals with the computer model which was suggested. It turned out, however, that as we began to load the data bases, we found that so much core storage was used up with instructions and in controlling the initial group of 25 terminals, that the addition of more terminals was out of the question. This was a major problem that was unforeseen by the computer manufacturer, partly because there was no operating network of comparable size and scope at that time, nor is there now.

At the time it was established, the Network headquarters were located in Syracuse, New York. In September 1971, they were moved 120 miles east to Albany, and although a larger computer was put into operation at that time, the total number of terminals has only risen to 27. New subscribers have been added, in part, by reallocating the existing number of terminals at institutions that had more than one.

The map shown in Figure 1 indicates the location of the SUNY Terminals as of March 1972. It can be seen that this is a fairly wide ranging network which covers a considerable geographic area. Although the network plan was extremely ambitious, it has been amazingly successful, even though all of the goals that were projected were not achieved. We will cover some of the reasons for these failures shortly.

Before describing what the Network does, or was supposed to do, it is important to discuss the data base, because this is perhaps the single most important element of the system. Even before the data base, however, one must have a plan which defines what the network is, whom it is going to serve, what kinds of services it is expected to perform for the users, and then one tries to decide how best to accomplish these goals. This Network was planned in late 1965 by a committee of six people--three being users and three librarians--three faculty members from each of SUNY's medical centers, and the heads of the three SUNY medical libraries. The decision was made to approach the network problem from the point of view of user services; that is, solving the libraries' housekeeping problems was not the primary goal. That may sound like heresy coming from a librarian, but that was indeed the approach taken.

The initial data base consisted of five years of Index Medicus citations (the published indexes for this period occupy approximately forty feet of shelf space) which represent the indexing of five years of some 2,000 international medical journals. This amounts to more than 1.2 million citations, which is, indeed, a large file. These citations were obtained

from the MEDLARS tapes produced by the National Library of Medicine, and this is the data base which was searched when a library requested a MEDLARS search. A MEDLARS search was performed off-line by scanning all of the reels of magnetic tape containing the information, and this is the type of search which is now being performed on-line by this system.

Another element of the data base consisted of book records. Besides having an automated, computer-produced index to the journal literature, the National Library of Medicine also issues a very sophisticated computer produced book catalog entitled the Current Catalog. The records for the Current Catalog were also included in the network data base, in addition to the book records in the three SUNY medical libraries from 1962 to 1969. The 1962 date was purely an arbitrarily selected cut-off date, but it did provide a data base which experience had shown would satisfy approximately 80% or more of the book requests of the user. The entire book file, therefore, consisted of some 40,000 records. In addition, the network was engaged in the production of a union list of serials for more than sixty SUNY libraries, and this location and holdings information was also included as a segment of the data base. It was also planned to add all of the circulation records for the Network libraries, and finally, one of the most important pieces of the data base, the thesaurus.

The thesaurus had several unique features. First of all, it consisted of the MeSH (Medical Subject Headings) list which is used by the National Library of Medicine to create the Index Medicus and the Current Catalog. In order to search the file, one must use the controlled vocabulary represented by MeSH. But because we were trying to develop a system which was user oriented, it was decided that it was necessary for the user to be able to type-in his own terminology and not be penalized by being thrown off the system because such a term might not be a MeSH heading.

The thesaurus was augmented by mapping natural language terms to the structured MeSH list. This was done in part by reading the Index Medicus to tie the words used in titles to the subject headings used for indexing. This was done so that the system would perform the dictionary look-up of the alternate term and supply the appropriate MeSH heading(s), instead of forcing the user to do this. We were thereby using the computer to perform a task which it was able to do very quickly and very well.

In addition to this, we mapped the Standard Nomenclature of Diseases and the International Classification of Disease to the subject heading list. Some of the terms could be mapped on a one-to-one basis, but most were complicated and required

several coordinated MeSH terms to define. For example, a simple term such as cancer is not meaningful in a medical index and must be first translated to the term neoplasms. This general term should then be further defined by site of tumor and type of tissue affected, or related to a specific causative agent.

We faced a different problem in relation to the monographic or book literature, in that medical librarians have argued the value of this body of data for some time. The argument, generally stated, is that after the first two years of medical school, the journal literature becomes far more important than the book literature due to the fact that it takes so long for books to be published that the information is outdated, or of historical interest only, or is useful for a broad overview of a specific topic, etc. This seems to be a fairly reasonable assumption, but we wished to test it.

We therefore began to index the monographs at the Syracuse location (15-20,000 titles) on a chapter-by chapter basis, treating each chapter as though it were a journal article. This meant assigning an average of 7 or 8 headings per chapter, (Figures 2-3), although the indexer could decide that smaller units were significant and treat them as indexable units. This meant that some books received hundreds of headings as contrasted with the four or five that would be assigned in normal subject cataloging. This work was especially important in the area of conference proceedings which are not generally indexed, and are, in effect, collections of journal articles. We, therefore, hoped to test the theory that if a user could find out specifically what was in a book section then the use of such material would increase significantly.

Another feature of the system was the user-oriented query language. This was intended to allow the untrained user to carry on a dialogue with the system which would result in the construction of a search equation for his question. This was done through the tutorial mode using a series of questions which could be answered by yes or no, or multiple choice selection to define the parameters of the search, and then having the user type in the MeSH terms. It consisted of questions like "Do you wish to search a. journals, b. books, c. both" "Are you interested in English language material only?" If no "Are you also interested in a. French, b. German, c. Russian, d. all languages?" The result of this process looks like a flow chart when outlined, and modifies the search equation. In short, it is the reference interview conducted by the computer. Search analysts were also available at the terminal to assist the user or to conduct the search for him if he preferred.

The amount of typing that the user was requested to perform was minimal primarily because most people are such poor typists. This meant that instead of having to type the words yes or no, he merely had to type the letters "y" or "n." Partly because of the typing problem, the thesaurus also contained the most common misspellings of words (e.g., opthalmology) as well as variations such as the English spelling of such words as "Gynaecology" or "Anaesthesia." This procedure resulted in a Boolean search equation and the search was then initiated while the user was asked to type in his name, department, and institutional affiliation. (See Figure 4)

This system, therefore, generally ties together all of the systems which have been described in this seminar and one can now see what services are thus available to the researcher as a result.

After the search has been formulated the user begins to receive his answer within 60 seconds (Figure 5). The output is in the form of bibliographic citations to books and journals. These are in two groups and limited to a maximum of ten each. There are valid reasons for this, among them, the computer is operating at electronic speeds, but the output is limited by the speed of the terminal used. These are mechanical devices like typewriters which can only type 10 characters per second.

As the user reviews the citations that are produced, he is then asked to indicate which of them are relevant and, therefore, of interest. He then types in a code number which appears next to the particular citation he wishes to obtain. If the number is for a book citation, the computer then refers to the record and obtains the call number and the location of the closest network library which owns it, if it is not in the users' library. If it is in the users' library, the system checks the circulation records and determines its status. If the book is not in circulation he receives a message giving him the call number and any other appropriate internal location information. At this point, it is conceivable for the computer to send a message to a page or to an automated book delivery device like a Randtriever to speed the delivery of the book to him. The bibliography, therefore, is the end of the present cycle in this system, but does not have to be the end of the cycle in another network.

If the item was a journal article that the patron wished to see, the computer searched the records in the union list segment of the file. This provided location information by title and volume but not issue by issue. If the journal was in the user's library, the circulation records were checked, and if the volume was not out, he was given the necessary information to retrieve the item. If the item was not in the

library, the computer determined which was the nearest network location that could supply it. The user was then informed that the item was not available in his library and that it would be borrowed on interlibrary loan, unless he refused that service. (see Figure 6). The request was automatically typed at the supplying library and a copy of the request produced in the interlibrary loan department of his library, both in standard TWX transmission format. The assumption was that because the user had already said he was interested in an item on the output list, there was no point in asking him again if he wanted the library to provide it, but he was given the option of preventing the transaction if he could not or did not wish to wait.

The citations in question have been held by the computer during these steps so that the job of looking information up is only done once. In addition, there is no verification step necessary because no human transcription of the data has taken place, and the data has already been checked at the time of input to the system. (Figure 7)

Another option available to the user was in relation to the citations which might have been retrieved but not printed out. He was told how many citations were obtained, and could then request that an off-line print-out be produced and mailed to him. It was assumed that he would obtain at least one or more items in his own library immediately, and that these would occupy him until the other items arrived on interlibrary loan and he could also obtain his off-line bibliography.

All of these things were supposed to happen in the first phase of the Network development. They did not all occur. Table 1 lists the various components of the system and indicates their status. The search language was developed and does work, but it has been determined, after more than three years of operational experience, that the searches that can be obtained by the untrained user are much less relevant than those obtained by a trained search analyst who understands the construction of the indexing system. As a result, the user is dissatisfied with his own searches and tends to blame the system when in fact the problem lies in his ability to formulate his own search request. The problem occurs in the use of a printed index by the user, but is not so apparent. He does not try to use the printed index to coordinate interrelated terms in order to obtain a very specific answer to his information problem. As a result, the Network is now phasing out the use of the query language.

The Libraries did not input their circulation records for a variety of reasons, some fearing that they would need to alter their existing circulation systems, although this was

TABLE I

NETWORK FILES AND SERVICES

NETWORK COMPONENT	WORK PERFORMED	PROGRAMMED	OPERATIONAL	IN SERVICE 1972
Journal Search On-line most recent three years	Yes	Yes	Yes	Yes
Journal Search Off-line earlier data	Yes	Yes	Yes	Yes
Book File Search-SUNY records	Yes	Yes	Yes	Off-line
Book File Search-NLM records	Yes	Yes	Yes	Yes
Union Lists of Serials				
SUNY Union List	Yes	Yes	Yes	4th Ed. in preparation
New York State Union List	Yes	Yes	Yes	No**
Central New York Union List	Yes	Yes	Yes	No***
Western New York Union List	Yes	Yes	Yes	No****
Rochester Regional Union List	Yes	Yes	Yes	2nd Ed. in preparation
SUNY at Buffalo Union List	Yes	Yes	Yes	No
Direct Search by Trained Analyst	Yes	Yes	Yes	Yes
User Query Language	Yes	Yes	Yes	Phasing Out
SUNY Upstate Medical Center Subject and Alphabetical Serials Lists	Yes	Yes	Yes	No
Depth Indexing of Syracuse Books	Yes	No	No	No
Current Catalog Tape Conversion to MARC I Format	Yes	Yes	Yes	No
On-Line In-Process File for Acquisitions & Shared Cataloging	Yes	Yes	Yes	Yes
Interlibrary Loan Transfer	Yes	Yes	No	No
Augmented Thesaurus	Yes	Yes	No	No*
Circulation Records	No	No	No	No

* Master Files lost in move from Syracuse to Albany-no machine readable record extant

** Phase One-completed and published by CCM, Phase Two deferred from lack of funds

*** Two editions published, third edition deferred-lack of funds

**** One edition published, second edition deferred-lack of funds

not necessarily the case. Part of the problem in this area was that an on-line circulation system was not practical at that time for a large and georgraphically diverse group of libraries.

The union list data for serials was input and now appears to work although there were initial problems unrelated to the libraries themselves. These took the form of communication problems with the National Library of Medicine which changed journal codes without informing the programmers after the old codes had been stored in the system. This resulted in misinformation being generated in response to the location step in the system.

The automatic generation of interlibrary loan requests is also not in operation, but for different reasons. All of the necessary work to accomplish this step was performed, and tested, but at that point, the libraries could not agree on procedures, and were primarily concerned by the volume of requests which would be automatically generated. The same fears affected the National Library of Medicine which had agreed to take requests for those journal and book items which were not in the network. Its interlibrary loan operation was already overburdened, and it was felt that this experiment could not be undertaken at that time.

In phase two, it was planned to add to the data base by using other sources like Chemical Abstracts, Bibological Abstracts, Excerpta Medica, Science Citation Index, etc. This would enable the system not only to retrieve citations, but also, in many cases, to have provided an abstract of the desired article. It would require a change in the output equipment to a terminal with a keyboard and a cathode ray tube for visual display of the abstract, and would also necessitate the correlation of the index file with the abstract file by pairing numbers referring to the same documents. The user would thus be able to read the abstract and then decide if he wanted the article, at which point the system would continue in the way that was originally planned. Such a system is still some distance in the future, and no library or retrieval system has yet correlated this type of multiple data base and coupled it with a delivery system. The University of Chicago's recent announcement of grant support by the Council on Library Resources noted that this was one of their goals, but something for which they had not yet been able to obtain funds. The SUNY Network proposed this step in 1966.

The political problems in a network are real and complex. Those who have worked on a TWX network in the establishment of procedures and policies know that there are no simple problems or easy solutions. Everyone has got to give; if one member is inflexible, the entire network is liable to collapse.

It is also important to remember that the human problems are complex and their solution is vital to the success of a network. It was noted above that SUNY discovered that the user preferred a mediated search to the self service approach, and that better results were thus obtained. The network does not eliminate people, nor does it dehumanize the library; the librarian is still a key person. The cataloger who has been assigning the subject headings to the library's materials performs the job of search formulation equally as well as the reference librarian. There are good arguments for having catalogers as well as reference staff work with the user in a mediated system.

The researcher is served by a network, then, by the faster provision of document delivery services which are achieved through the machine correlation of many existing library records and services. He is served by the resultant ability of the library to provide more and better services in a dynamic fashion by taking the library to the user and by not having to wait until he appears in the circulation or reference departments. The researcher is served by being able to receive routinely the kind of express services which libraries give to people by telephone while the user who makes the effort to come to the library in person waits or is denied equal benefits. He is served most, however, by the step that a network takes toward fulfilling the library goal of making any information available to him no matter whether it is owned locally, regionally, by a national library, or abroad. A network represents the first true steps toward making the universe of information available to a researcher at a price which he and society can afford.

APPENDIX

Various printed lists can be compiled as by-products to the network, which may be used either to assist the librarian-user or the researcher. Such a tool is an authority list for all subjects and names used as catalog tracings and main entries. Figure 8 shows the Name authority file created by listing all entries in the main entry field. This list is also useful for spotting inconsistent entry of data, misspellings, and typing variations. Such a list can be used at the card catalog to quickly scan for an entry. In a system with visual display terminals, the file can be created and called up on the screen by both librarian and user. Figure 9 shows the Subject authority list which can be used in the formulation of search requests, as well as in the cataloging operation.

Figure 10 shows another library by-product of the network, computer-produced catalog guide cards. These are used instead of producing cards with subject tracings displayed at the top of the card. The tracing that the card files behind is printed on the appropriate card in a set. Changing subject headings is thus somewhat simplified by not having to correct both top and bottom of a card which is to be refiled under a new tracing. Of course, if the catalog has been replaced by an on-line catalog with visual display, the entire problem is made even simpler.

Figure 2. Conversion Input Form. This is basically the same form used by the Library of Congress MARC project. The format shown is MARC I which was still in use through 1968.

Figure 3. Part two of the conversion input form shows the chapter-by-chapter depth indexing. As can be seen, the number of headings assigned to this particular book has been expanded from two (shown on the photo-copy of the LC card) to thirty, plus two check tags. At the bottom is shown the chapter index which was to have given the user specific page information regarding the segment of the book which pertained to his search.

Figure 4. Sample of user query language showing formating of questions and responses to initiate a search relating to automatic-data-processing in libraries, or computers in libraries. The computer search which resulted follows.

Figure 5. A schematic diagram showing the elements of the Network called into use by a user query. The search is performed on the Central Processing Unit, and the relevant citations are retrieved from the data base

files on magnetic disk storage. This information is then stored in the Message Queue File until it is ready to be returned to the user's terminal.

Figure 6. This diagram shows how the interlibrary loan request information is manipulated. The citation which the user selected is reformated into a standardized ILL message and transmitted to two administrative terminals, one in the user's library and one in the lending library. Non-availability of the item is communicated to the borrowing library by an administrative message which the ILL staff member types on his terminal and addresses to the administrative terminal of the library which had requested the item.

Figure 7. A diagrammatic representation of the type of message switching done for reporting on ILL availability.

Figures 2, 3, 5, 6, 8, and 9 originally appeared in the Bulletin of the Medical Library Association and are used by permission of the Editor.

References

Bridegam, W. E. Jr., and Meyerhoff, E. Library participation in a biomedical communication and information network. Bulletin of the Medical Library Association 58:103-111, 1970.

Cain, A. M. Thesaural problems in an on-line system. Bulletin of the Medical Library Association 57:250-259, 1969.

Onsi, P., and Pelosi, S. Cooperative cataloging from a participant's point of view: A record of SUNY's and Countway's experiences. Bulletin of the Medical Library Association 58:126-133, 1970.

FIGURE 1

SUNY BIOMEDICAL COMMUNICATION NETWORK MARCH 1972

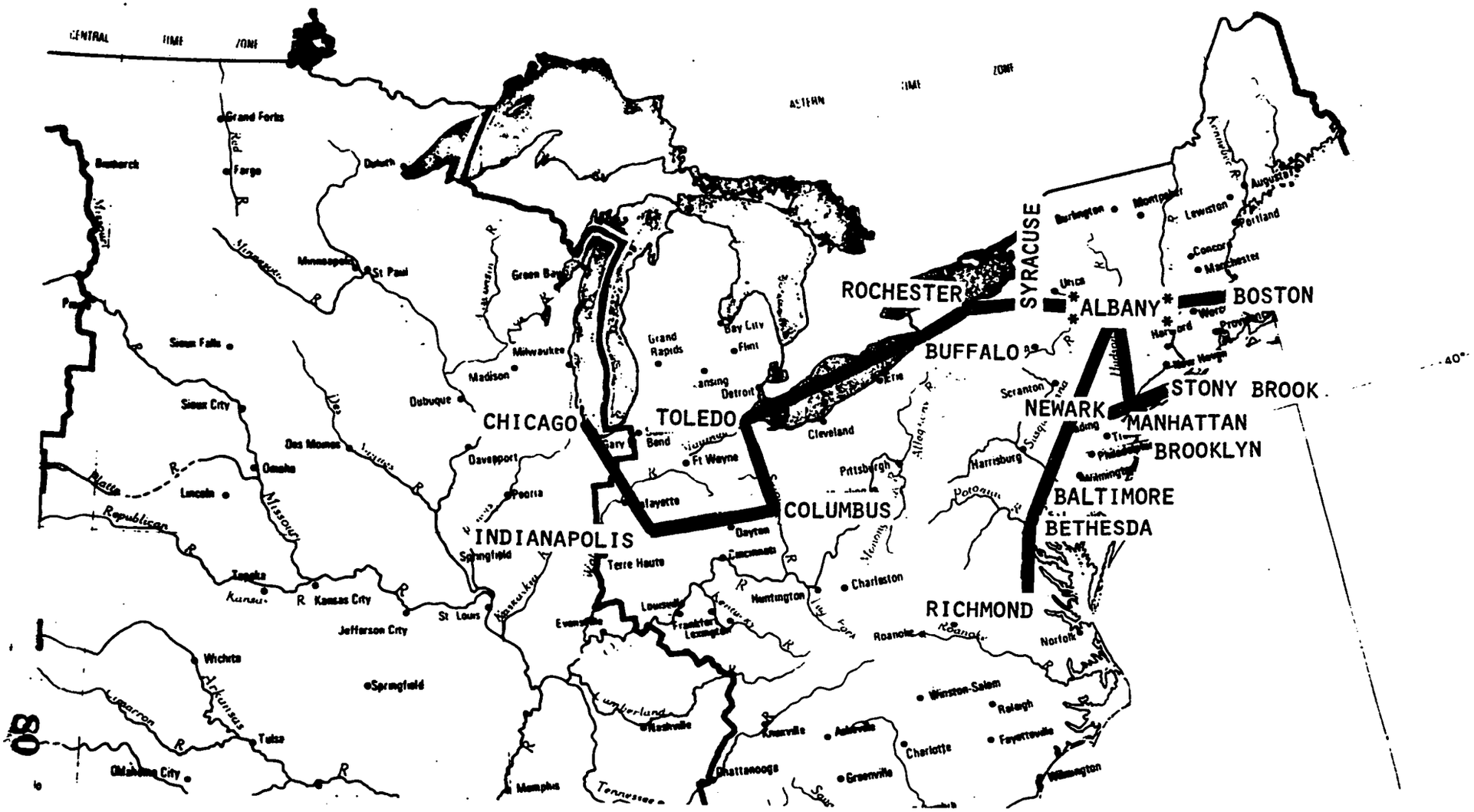

STATE UNIVERSITY OF NEW YORK BIOMEDICAL COMMUNICATION NETWORK
CONVERSION INPUT FORM

Supp.	Type of Entry	Listing	Illus.	Map	Form	Level	Edition
	A Personal T Uniform G Title Z Corporate	X Bib D Rev B Abs E Cat C Ind F Dir	X Present A Mono dr B Col dr C Mono ph D Col ph	X Map A Port B Map & Por	X Conf A Essay B Outline C Thesis D Q & A	X Jun A Pop B Text C Lab	No. Word

Language			Publication					Copy Statement		
Class	Lang 1	Lang 2	Key	Date 1	Date 2	Place	Publisher	U	D	H
3	Eng		S	1963		ILSP	THOM	2	2	

E

Tag	Description
05	UMC Call Number
06	DMC Call Number
07	HSL Call Number
10	Main Entry
20	Title
25	Remainder
30	Imprint
40	Collation
50	Series - add
51	Series - no
60	Notes - store
65	Notes - no
70	Subject Tracing
71	Personal Tracing
72	Corporate Tracing
73	Uniform Tracing
74	Title Tracing
75	Series Tracing
95	UMC Accession Number

05
WT 100 $
D 119r
1963

10
Dacso, Michael M.

20 Restorative medicine in geriatrics, By Michael M. Dacso, with 15 contributors. Intrd. by Howard A. Rusk. Springfield, Ill. Thomas, 1963.

40 224 p. illus. 24 cm. (American lecture series, publication no. 5 American lectures in physical medicine and rehabilitation)

65 Includes bibliography.

95
70991 $
82249D

10
1. Geriatrics. 2. ~~Disabled--Rehabilitation, etc.~~ ~~I. Title.~~ 74T

~~RC952.5.D3~~ ~~618.97~~ ~~63-11518~~

~~Library of Congress~~

FIGURE 2

STATE UNIVERSITY OF NEW YORK BIOMEDICAL COMMUNICATION NETWORK

DEPTH INDEXING FORM

MAIN HEADING *subheading	CHAPTER NOS.	CHECK TAGS	CHAPTER NOS.
PREGNANCY		CASE REPORT	
GERIATRICS	0	CLINICAL RESEARCH	
AGED	0	HUMAN	0
NERVOUS SYSTEM *physiopathology	1	FEMALE	
MUSCLES *physiopathology	1	MALE	
EXERCISE THERAPY	2,4	INFANT, NEWBORN - 1 mo	
PHYSICAL EXAMINATION	3	INFANT 1 - 23 mos	
BRACES	6	CHILD, PRESCHOOL 2-5 yr	
BRACES *instrumentation	6	CHILD 6 - 12 yrs	
HEMIPLEGIA	6	ADOLESCENCE 13-18 yrs	
HEMIPLEGIA *rehabilitation	6	ADULT 19 - 44 yrs	
FRACTURES	7,8	MIDDLE AGE 45-64 yrs	
FRACTURES *surgery	7	AGED 65 +	0
HIP *injuries	8	ANIMAL EXPERIMENTS	
FRACTURES *rehabilitation	8	CATS	
AMPUTEES	9	CATTLE	
PROSTHESIS	9	DOGS	
AMPUTATION	9	GUINEA PIGS	
AMPUTATION *therapy	9	MICE	
AMPUTATION *rehabilitation	9	MONKEYS	
OSTEOPOROSIS	10	RABBITS	
OSTEOPOROSIS *therapy	10	RATS	
JOINT DISEASES	11	IN VITRO	
JOINT DISEASES *classification	11	COMPARATIVE STUDY	
JOINT DISEASES *therapy	11	HISTORY OF MEDICINE	
GAIT	12	BIOGRAPHY	
CHRONIC DISEASE	13	HISTORICAL WORK	
CHRONIC DISEASE *prevention & control	13	Ancient	
MENTAL HEALTH	14	Medieval	
ENVIRONMENT	15	Modern	
PATIENTS	16	15th Cent	

CHAPTER INDEX					
01:	7-35	11:	211-229	21:	
02:	36-51	12:	230-244	22:	
03:	52-71	13:	245-258	23:	
04:	72-89	14:	259-274	24:	
05:	90-108	15:	275-289	25:	
06:	109-124	16:	290-298	26:	
07:	125-133	17:		27:	
08:	134-139	18:		28:	
09:	140-169	19:		29:	
10:	170-210	20:		30:	

2088

FIGURE 3

FIGURE 4

SAMPLE SEARCH - SUNY BIOMEDICAL COMMUNICATION NETWORK

QUERY LANGUAGE SECTION

```
TO BEGIN ENTERING A SEARCH TYPE IN THE WORD START.
start
DO YOU WANT INSTRUCTIONS ON HOW TO ENTER A SEARCH?
n
INDICATE THE TYPE OF SEARCH YOU WANT PERFORMED.
  A.  JOURNAL SUBJECT
  B.  BOOK SUBJECT
  C.  BOOK AND JOURNAL SUBJECT
  D.  BOOK AUTHOR
  E.  BOOK LOCATION
c
IF YOU WANT AN EXPLANATION ON HOW TO ENTER SUBJECTS, TYPE IN THE WORD
EXPLAIN.
OTHERWISE, TYPE IN THE FIRST SUBJECT AND, IF DESIRED, A SUBHEADING.
libraries
DO YOU WANT TO ADD ANOTHER SUBJECT TO THIS GROUP?
libraries, dental
ANSWER NOT APPROPRIATE.
RE-ENTER.
libraries dental
ANOTHER SUBJECT TO THIS GROUP?
libraries medical
ANOTHER SUBJECT TO THIS GROUP?
libraries hospital
ANOTHER SUBJECT TO THIS GROUP?
libraries nursing
ANOTHER SUBJECT TO THIS GROUP?
n
DO YOU WANT TO BEGIN ANOTHER GROUP OF SUBJECTS?
y
THIS IS A NEW GROUP.
TYPE IN THE FIRST SUBJECT AND IF DESIRED, A SUBHEADING.
automatic data processing
ANOTHER SUBJECT TO THIS GROUP?
computers
ANOTHER SUBJECT TO THIS GROUP?
n
DO YOU WANT TO BEGIN ANOTHER GROUP OF SUBJECTS?
n
DO YOU WANT TO RESTRICT YOUR SEARCH BY LANGUAGE?
y
ARE YOU INTERESTED IN ARTICLES WRITTEN IN ENGLISH?
y
ANY OTHER LANGUAGES?
n
YOUR SEARCH IS BEING PROCESSED.
```

```
PLEASE TYPE IN YOUR NAME AND DEPARTMENT.
irwin pizer/library of the health sciences
OPTION NMEDLR01,STAT;
K001 LIBRARIES;
K002 LIBRARIES-DENTAL;
K003 LIBRARIES-MEDICAL;
K004 LIBRARIES-HOSPITAL;
K005 LIBRARIES-NURSING;
K006 K001, K002, K003, K004, K005;
K007 AUTOMATIC-DATA-PROCESSING;
K008 COMPUTERS;
K009 K007, K008;
K010 K006 & K009;
LIST LOCAL,AUTHORS,TITLE,JTA,PUBDATE,PAGES,LANGUAGE,JTC;
R001 IF LANGUAGE EQ 'ENG ';
END:
```

OUTPUT

RESULT 0000000001

RESULT 0000000007

118770 J0
AUTHORS: OTA M, EVANS GT
TITLE: MECHANIZATION OF LIBRARY PROCEDURES IN THE MEDIUM-SIZED MEDICAL LIBRARY. XII. AN INFORMATION RETRIEVAL SYSTEM- A COMBINATION OF A MANUAL SELECTIVE DISSEMINATION OF INFORMATION, AND A PERSONAL FILE INDEXING SYSTEM BY COMPUTER.
JTA BULL MED LIBR ASS
PUBDATE: APR 70
PAGES: 58, 112-9
LANGUAGE: ENG

118771 J1
AUTHORS: BECKWITH HK
TITLE: MECHANIZATION OF LIBRARY PROCEDURES IN THE MEDIUM-SIZED MEDICAL LIBRARY. IX. HOLDING STATEMENTS IN PHILSOM- A STUDY OF THEIR ACTIVITY.
JTA: BULL MED LIBR ASS
PUBDATE: APR 70
PAGES: 58, 120-5
LANGUAGE: ENG

118775 J2
AUTHORS: LEMKAU HL,STRAUB JR
TITLE: THE DESIGN OF THE AUTOMATED SERIALS ACCESSION SYSTEM AT THE LIBRARY OF THE MOUNT SINAI SCHOOL OF MEDICINE OF THE CITY UNIVERSITY OF NEW YORK.

JTA: BULL MED LIBR ASS
PUBDATE: APR 70
PAGES: 58,163-72
LANGUAGE: ENG

141770 J3
AUTHORS: EICHHORN MM,REINECKE RD
TITLE: VISION INFORMATION CENTER- A USER-ORIENTED DATA BASE.
JTA: SCIENCE
PUBDATE: 3 JUL 70
PAGES: 169,29-31
LANGUAGE: ENG

157398 J4
AUTHORS: MACLEAN HI
TITLE: NATIONAL SERVICES PROVIDED BY THE HEALTH SCIENCES RESOURCE CENTRE OF CANADA.
JTA: BULL MED LIBR ASS
PUBDATE: JUL 70
PAGES: 58,341-5
LANGUAGE: ENG

157401 J5
AUTHORS: MILLER JK
TITLE: MECHANIZATION OF LIBRARY PROCEDURES IN THE MEDIUM-SIZED MEDICAL LIBRARY. XI. TWO METHODS OF PROVIDING SELECTIVE DISSEMINATION OF INFORMATION TO MEDICAL SCIENTISTS.
JTA: BULL MED LIBR ASS
PUBDATE: JUL 70
PAGES: 58,378-97
LANGUAGE: ENG

RESULT: 0000000001

15084 J6
AUTHORS:
TITLE: ONTARIO'S QUEEN'S UNIVERSITY STARTED AS A CHURCH SCHOOL.
JTA: INT SURG
PUBDATE: OCT 69
PAGES: 52, SUPPL-16-7
LANGUAGE: ENG

#
OPTION NETBOOK1,STAT;
K001 LIBRARIES;
K002 LIBRARIES-DENTAL;
K003 LIBRARIES-MEDICAL;
K004 LIBRARIES-HOSPITAL;
K005 LIBRARIES-NURSING;

```
K006  K001,K002,K003,K004,K005;
K007  AUTOMATIC-DATA-PROCESSING;
K008  COMPUTERS;
K009  K007,K008;
K010  K006 & K009;
LIST LOCAL,AUTHOR,TITLE,IMPRINT,IDNUMBER,CALLUMC,CALLROC,CALLHSL,CALLDMC,
     CALLBOS,CALLNLM;
R001  IF LANG 1 EQ 'ENG';
END;
RESULT            0000000008
```

3459 B0
AUTHOR: SCHULTHEISS, LOUIS AVERY, 1925-
TITLE: ADVANCED DATA PROCESSING IN THE UNIVERSITY LIBRARY.
IMPRINT: NEW YORK, SCARECROW PRESS, 1962.
IDNUMBER: 0003725

6509 B1
AUTHOR: COX, N. S. M.
TITLE: THE COMPUTER AND THE LIBRARY , THE ROLE OF THE COMPUTER IN THE ORGANIZATION AND HANDLING OF INFORMATION IN LIBRARIES.
IMPRINT: NEWCASTLE UPON TYNE,(UNIV. OF NEWCASTLE UPON TYNE LIBRARY, 1966.
IDNUMBER: 0006982

6510 B2
AUTHOR: CREATIVE RESEARCH SERVICES, INC.
TITLE: THE USE OF DATA PROCESSING EQUIPMENT BY LIBRARIES AND INFORMATION CENTERS.
IMPRINT: (CHICAGO, 1966)
IDNUMBER: 0006983

7332 B3
AUTHOR: LUSTED, LEE BROWNING, 1922-
TITLE: PRIME AN AUTOMATED INFORMATION SYSTEM FOR HOSPITALS AND BIOMEDICAL ENGINEERING LABORATORIES <BY> LEE B. LUSTED <AND> ROBERT W. COFFIN.
IMPRINT: CHICAGO, YEAR BOOK MEDICAL PUBLISHERS <C1967> 7.50
IDNUMBER: 0007909

8374 B4
AUTHOR: CONFERENCE ON THE USE OF COMPUTERS IN MEDICAL EDUCATION, UNIVERSITY OF OKLAHOMA, 1968.
TITLE: PROCEEDINGS.
IMPRINT: OKLAHOMA CITY, 1968.
IDNUMBER: 0009012

8782 B5
AUTHOR: COX, NIGEL S. M., ED.
TITLE: ORGANIZATION AND HANDLING OF BIBLIOGRAPHIC RECORDS BY COMPUTER, EDITED BY NIGEL S. M. COX AND MICHAEL W. GROSE.
IMPRINT: <NEWCASTLE UPON TYNE> ORIEL PRESS <C1967> 9.10
IDNUMBER: 0009464

8783 B6
AUTHOR: UNSTEAD, CHARLES R.
TITLE: AUTOMATED LIBRARY CONTROL SYSTEMS, BY CHARLES R. UNSTEAD AND FRED E. CROXTON.
IMPRINT: DETROIT, AMERICAN DATA PROCESSING <1968>
IDNUMBER: 0009465

9389 B7
AUTHOR: AUSTIN, CHARLES J.
TITLE: MEDLARS 1963-1967.
IMPRINT: BETHESDA, MD., NATIONAL LIBRARY OF MEDICINE <FOR SALE BY THE SUPT. OF DOCS., U. S. GOVT. PRINT. OFF., 1968> 75 CENTS
IDNUMBER: 0010219

RESULT 0000000012

13920 B8
AUTHOR: CASE WESTERN RESERVE UNIV., CLEVELAND, OHIO. SCHOOL OF LIBRARY SCIENCE.
TITLE: LIBRARY AUTOMATION A CRITICAL REVIEW REPORT, DECEMBER 1969. LAVAHN OVERMYER.
IMPRINT: CLEVELAND, 1969.
IDNUMBER: 1226505

16540 B9
AUTHOR: UNITED STATES OF AMERICA STANDARDS INSTITUTE. SUBCOMMITTEE ON MACHINE INPUT RECORDS, SC-2. SPECIAL PROJECT ON DATA ELEMENTS.
TITLE: THE IDENTIFICATION OF DATA ELEMENTS IN BILIOGRAPHIC RECORDS FINAL REPORT OF THE SPECIAL PROJECT ON DATA ELEMENTS FOR THE SUBCOMMITTEE ON MACHINE INPUT RECORDS (SC-2) OF THE SECTIONAL COMMITTEE ON LIBRARY WORK AND DOCUMENTATION (Z-39) OF THE UNITED
IMPRINT: <NEEDHAM, MASS.> 1967. NA
IDNUMBER: 1210550

#
DO YOU WANT TO LOCATE ANY OF THE BOOKS WHOSE CITATIONS HAVE JUST PRINTED OUT?
y
ENTER THE 2-DIGIT LIST NUMBERS OF THE BOOKS YOU WANT TO LOCATE.
BE SURE TO SEPARATE EACH LIST NUMBER BY A SPACE.
A BOOK'S LIST NUMBER IS FOUND ON THE FIRST LINE
OF EACH BOOK CIRATION AND BEGINS WITH THE LETTER B.
b6 b8 b9
B6 IS AT SYRACUSE
B8 IS AT N L M
B9 IS AT N L M
#
E O S

Searching:

User's Terminal + Computer

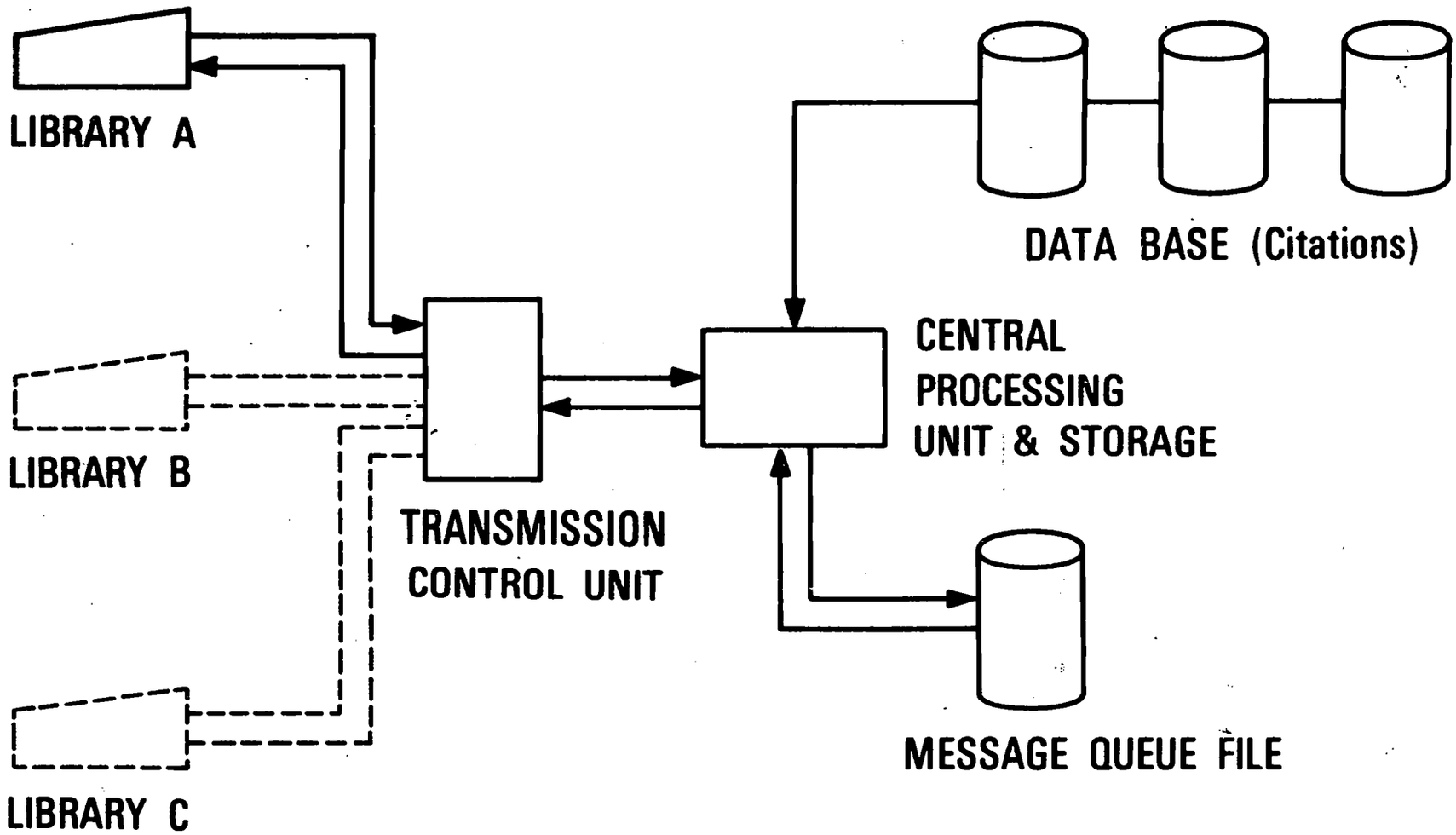

User-Initiated Interlibrary Loan Request

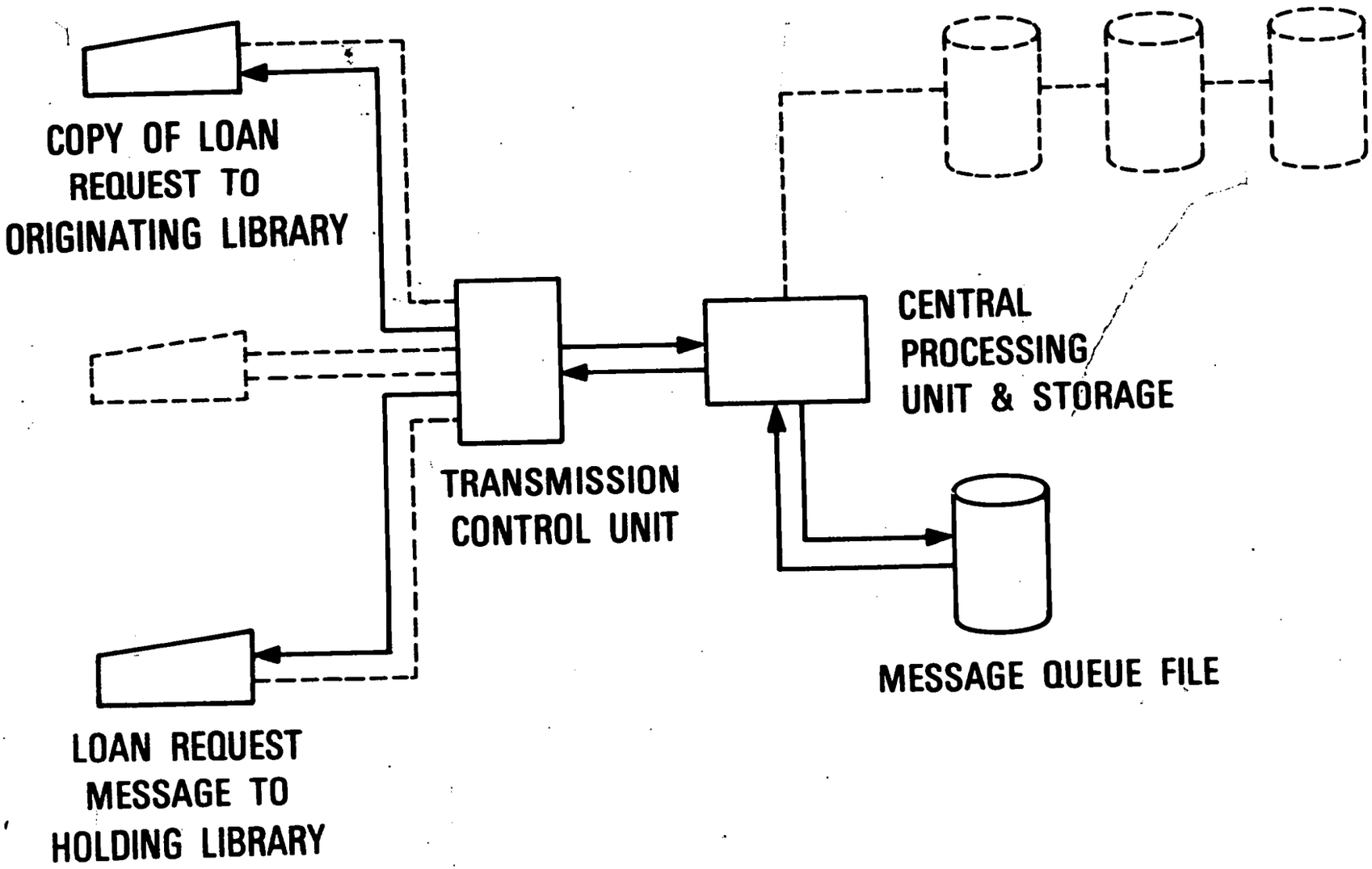

Terminal-to-Terminal Message Switching

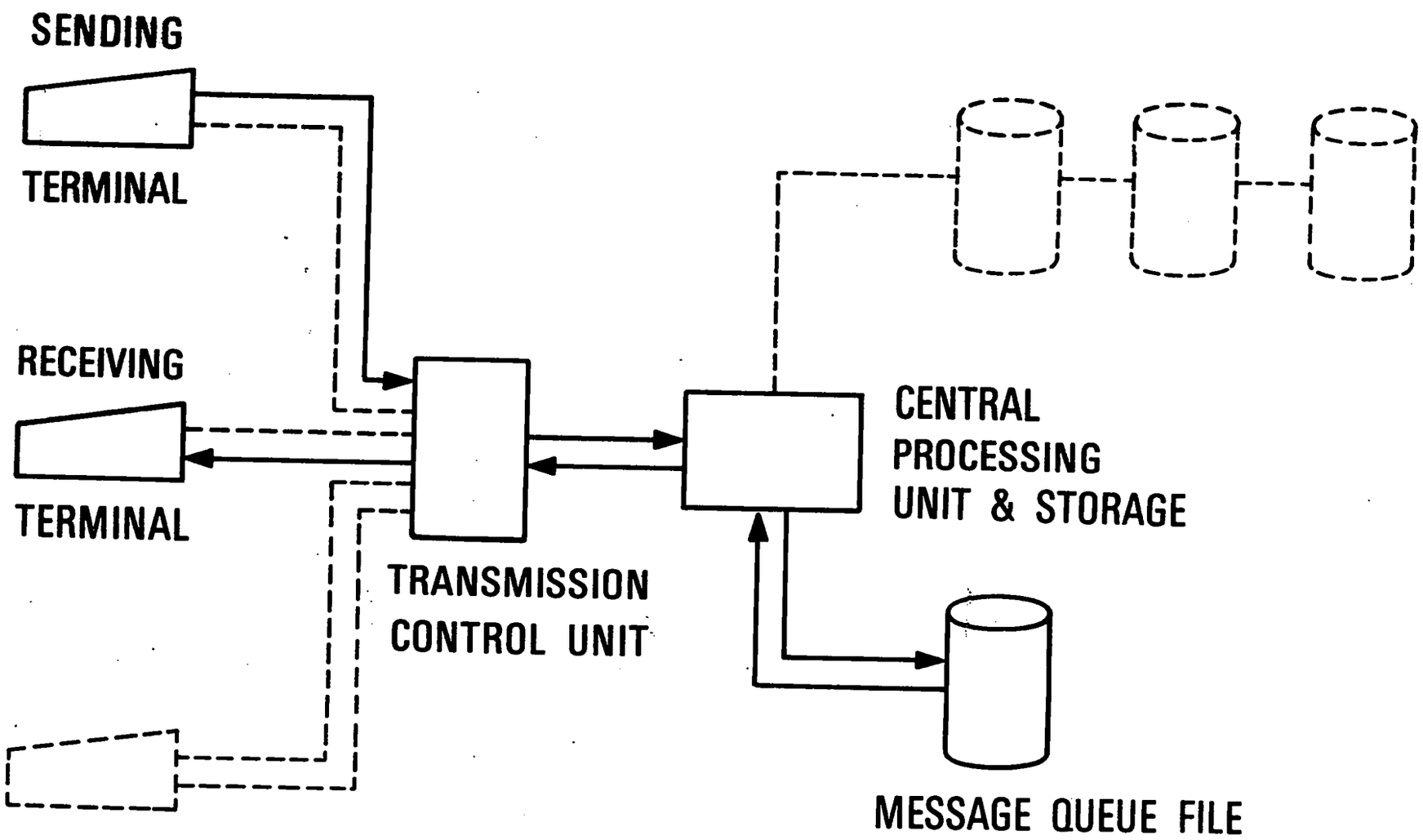

C3835 AIKEN, HENRY DAVID,% 1912%-

05009 AINSWORTH, GEOFFREY CLOUGH,% 1905%- ED.%

05119 AISEN, PHILIP,% JOINT ED.%

05131 AITKEN, J. T.

05152 AITKEN, JOHN THOMAS,% JOIN AUTHOR.%

05836 AJELLO, LIBERO,% 1916%-

06053 AKADEMIIA NAUK SSSR.% INSTITUT KHIMICHESKOI FIZIKI.

00991 AKADEMIIA PEDAGOGICHESKIKH NAUK RSFSR,% MOSCOW. INSTITU DEFEKTOLOGII.

06702 AKERT, KONRAD,% JOINT AUTHOR.%

06664 AKSTENS, ISABEL C.

05494 AL-KINDI, D. CA. 873.

C5807 ALBA, AUGUSTO,% 1923%-

C5439 ALBANESE, ANTHONY AUGUST

07095 ALBERT EINSTEIN COLLEGE OF MEDICINE,% NEW YORK.% D. SAMUEL GOTTESMAN LIBRARY.

02451 ALBERT EINSTEIN MEDICAL CENTER,% PHILADELPHIA.

04681 ALBERT, ADRIEN,% 1907%-

06054 ALBERT, ADRIEN% 1907%-

00036 ALBERT, SALOMON NAPHTHALI

C5860 ALBERT, SOLOMON N.

01282 ALCOCK, THEODORA

00989 ALCOHOLISM AND DRUG ADDICTION RESEARCH FOUNDATION.

03458 ALEXANDER, EDYTHE

01115 ALEXANDER, FRANZ,% 1891%-

05739 ALEXANDER, HARRY L.,% JOINT AUTHOR.%

04476 ALEXANDER, PETER,% 1917%-

03434 ALFORD, DOLORES MARSH

06501 ALKEN, CARL ERICH,% 1912%- ED.%

FIGURE 8

C0218 LEUKOCYTES.

C4396 LEWIS, SINCLAIR.

C4261 LIBERTY.

C3694 LIBRAIRIES, MEDICAL.

C4703 LIBRARIES AND STATE--U.S.

C4791 LIBRARIES.

C3705 LIBRARIES--AUTOMATION --CONGRESSES.

C6581 LIBRARIES--AUTOMATION--CONGRESSES.

C6586 LIBRARIES--DIRECT.

C6585 LIBRARIES--DIRECTORIES.

C6596 LIBRARIES--NEW YORK (CITY).

C6595 LIBRARIES--STATISTICS--U.S.

C3701 LIBRARIES--U.S.

C6594 LIBRARIES--U.S.--DIRECTORIES.

C6588 LIBRARIES, HOSPITAL.

C6661 LIBRARIES, HOSPITAL--BIBLIO- GRAPHY.

C6589 LIBRARIES, MEDI- CAL.

C6757 LIBRARIES, MEDICAL.

C6591 LIBRARIES, MEDICAL--CATALOGS.

C6760 LIBRARIES, MEDICAL--DIRECTORIES.

C6592 LIBRARIES, MEDICAL--LEGISLATION.

C6583 LIBRARY ASSOCIATIONS--DIRECTORIES.

C4703 LIBRARY EXTENSION--U.S.

C4286 LIBRARY SCHOOLS.

C6593 LIBRARY SCIENCE.
C6583 LIBRARY SCIENCE-- DIRECTORIES.
C6595 LIBRARY SCIENCE--DICTIONARIES.

C3562 LIBRARY SURVEYS.

FIGURE 9

ADAMANTINOMA
SEE
AMELOBLASTOMA

ADAMS-STOKES SYNDROME

ADAPTATION,
BIOLOGICAL

87

FIGURE 10