DOCUMENT RESUME

ED 063 805 08 EM 010 058

AUTHOR	Dwyer, Carol A.
TITLE	Teaching Strategies and Tactics for Computer-Assisted Instruction.
INSTITUTION	Pennsylvania State Univ., University Park. Computer-Assisted Instruction Lab.
SPONS AGENCY	Office of Education (DHEW), Washington, D.C. Bureau of Research.
REPORT NO	CAI-R-35
BUREAU NO	BR-5-0035
PUB DATE	Jun 70
NOTE	129p.
EDRS PRICE	MF-$0.65 HC-$6.58
DESCRIPTORS	*Computer Assisted Instruction; Documentation; *Flow Charts; *Manuals; Programing; *Teaching Methods
IDENTIFIERS	COURSEWRITER II

ABSTRACT

Over 30 flow charts are presented and described in order to document in a readable form a set of computer-assisted instruction (CAI) strategies and tactics, most of which have evolved out of the six-year experience at the CAI Laboratory at Pennsylvania State University. Introductory information defines CAI, explains how to use the manual, and describes the symbols and principles of flow charting. The flow charts are divided into three groups: course level flow charts which present general outlines of an entire course; section level flow charts which present the strategies in a unit or part of a unit or a course; and question level flow charts which explain strategies at the frame, problem, or question level. A glossary of CAI terminology is appended. (JY)

C·A·I

COMPUTER ASSISTED INSTRUCTION LABORATORY

COLLEGE OF EDUCATION · CHAMBERS BUILDING

THE PENNSYLVANIA STATE UNIVERSITY · UNIVERSITY PARK, PA.

Teaching Strategies and Tactics for Computer-Assisted Instruction

by

Carol A. Dwyer

June 1970

Report No. R35

The Pennsylvania State University
College of Education
Computer Assisted Instruction Laboratory
University Park, Pennsylvania

TEACHING STRATEGIES AND TACTICS FOR COMPUTER-ASSISTED INSTRUCTION

by
Carol A. Dwyer
June 1970

The research reported herein was performed pursuant to a grant with the U. S. Office of Education, Department of Health, Education, and Welfare. Contractors undertaking such projects under Government sponsorship are encouraged to express freely their professional judgment in the conduct of the project. Points of view or opinions stated do not, therefore, necessarily represent official position of the Office of Education.

Project No. 5-85-074

Harold E. Mitzel
Principal Investigator

ACKNOWLEDGMENTS

The author acknowledges extensive use of materials from manuals produced by International Business Machines Corporation.

Appreciation is expressed to the Computer Assisted Instruction Laboratory staff members for work done on the manuscripts prior to January 1968 when the author assumed responsibility for completion of the paper. Special thanks go to Mrs. Leslye Bloom for the graphic work on the flowcharts, to Mrs. Kris Sefchick for typing the manuscript, and to Dr. Keith A. Hall and Mrs. Betta H. Kriner for comments and suggestions.

FOREWORD

It is one of the self-evident truths of education that instruction systems whether they be primarily teacher mediated or presented by a combination of man-machine methods, are only as good as the programs resident in them. These resident programs are called "software" when used in machine mediated systems to distinguish this part of the system from the devices themselves. Too often, educators have, in recent years, become so preoccupied with the details and promise of "hardware" function and maintenance that the key role played by the curriculum concepts and their modes of presentation to the learner have been overlooked.

We hope this fate will not befall computer-assisted instruction and that hardware and software quality will develop simultaneously. To further progress in software, Mrs. Dwyer has assembled and organized into readable form a set of CAI strategies and tactics which have largely evolved out of the six-year experience at Penn State's Computer Assisted Instruction Laboratory. We hope the authors and specialists at institutions engaged in developing computer-assisted instruction courses will benefit from this manual and that it may be of use to students and teachers of educational psychology who are concerned with research on optimal instruction systems.

Some of the examples used in this manual stem from courses developed for the IBM 1410 computer system, which was used in time-sharing mode between July 1966 and June 1968. In December of 1967 an IBM 1500 system utilizing Coursewriter II language was installed in the CAI Laboratory. The latter is perhaps the most flexible and certainly the most popular language for tutorial computer use today.

Our thanks go to our U. S. Office of Education monitors on this project, Dr. Richard B. Otte and Dr. Mary Lee Hurt, who have been exceedingly patient and understanding of our efforts to pursue truth and to document that pursuit.

Harold E. Mitzel
Assistant Dean for Research
University Park, Pennsylvania
June 30, 1970

TABLE OF CONTENTS

TABLE OF CONTENTS (Cont.)

CHAPTER I

INTRODUCTION

The capabilities of computer-assisted instruction (CAI) have been extended by computers dedicated to the purposes of course development and presentation. Those who are considering using CAI for educational purposes often ask, "What teaching methods are available in computer-assisted instruction?" and "What teaching strategies will be appropriate for the objectives to be achieved in the course I will develop?" This manual is intended to help answer questions of this nature by providing explanations of various techniques and strategies for dealing with educational problems involved in computer-assisted instruction.

The strategies presented in this manual have not been evaluated, and the inclusion of a particular strategy does not indicate that the strategy is more effective than other strategies omitted from this manual.

Flowcharting is a procedure which depicts strategies as a simplified network of lines and symbols. Many of the flowcharts described in this manual follow the strategies used in courses developed at Penn State's CAI Laboratory, College of Education. In order to provide a variety of examples, additional strategies and flowcharts were developed by the author specifically for this manual.

CHAPTER II

WHAT IS CAI?

Computer-assisted instruction is one of the most recent advances in instructional technology. Through the use of a computer in which a course is programed and stored, the student can receive instruction which is individually paced and presented. This instruction may be tutorial in nature, be a problem simulation, consist of drill and practice, present information, or be a combination of all four types. The course materials for computer-assisted instruction are stored in the computer, and the information is presented to students at special instruction stations.

An important aspect of computer-assisted instruction is the speed at which the computer presents information to the students taking the course. The individual student feels that the computer is presenting only his lesson even though other students are taking the same course or other courses at the same time. This time-sharing is possible because the computer reacts in microseconds (millionths of a second) while a student reacts in terms of seconds.

Computer-assisted instruction utilizes several modes to communicate with the student. Recently developed systems use the cathode ray tube (CRT) as the main interface with the student; the CRT is similar in appearance to a television screen and on it lines of text and specially designed line drawings may appear.

A second mode of communicating with the student is the image projector which is used to show still transparent displays (black and white and color); each image can be accessed in any order in seconds. A third medium which can be used to present information to the student is the audio facility. The audio tape is part of the instruction station and can present prerecorded information to the student.

In using the computer for instruction purposes, questions can be presented by the computer; the student can respond by using the typewriter keyboard attached to the CRT. In addition, on instruction stations which incorporate a CRT, it is possible to have the student use a light pen to respond to questions. The student presses the light pen against his answer choice in a multiple-choice question; the light-sensitive pen receives the light and the position of his choice is recorded. Responses from the keyboard or light pen can then

be analyzed by the computer, and the student may be given feedback corresponding to the response made. The audio unit allows the student to record responses which may be analyzed by the instructor after the student has signed off the course.

Since the computer has the capability to record and recall student responses, the number of correct answers, the number of wrong answers, and so on, the sequence of instruction for a particular student can be altered on the basis of his responses. More challenging material or remedial instruction may be presented on the basis of past performance, or sections of the course may be skipped if the student's level of performance is at a specific level of proficiency. And if the student stops interacting with the computer for a period of time while taking a course, when he signs on again, instruction will resume where he stopped previously.

The computer can be used to record a variety of types of information for all students, e.g., the exact contents of his response, the number of seconds he takes to respond, and his exact position in a course. Summary information such as number of correct responses to a question, total number of response attempts, etc., may be produced for analysis by the instructor thereby reducing the teacher's clerical duties and freeing him to give individual instruction.

The nature of the computer input is such that it will accept course content in two ways: 1) course statements may be punched on cards, or 2) course material may be input directly into the computer from the instructional station keyboard. Using the second method, the contents of a course can be replaced, corrected, or deleted easily and quickly by special author commands.

In the present stage of development, CAI systems may accommodate as many as 150-200 student instructional stations simultaneously. Conceivably, students at these stations could all be on different courses simultaneously.

To develop and present courses, the computer utilizes several components. The central processing unit or CPU is the nerve center of the computer and directs the activities of all other components. A disk unit is used to house the disks on which course information is stored magnetically. Information anywhere on the disks can be reached in less than a second, thus making rapid course execution possible. The disk packs are interchangeable; therefore, it is possible to have any number of courses available in a disk library.

A card reader-punch may be used to input course content from punched cards and to punch out previously stored course content; the card reader-punch is also used to request a listing of course contents. A printer is used to list course contents for use by the programer or instructor.

One component of the computer, the station control unit, relays messages from the instructional stations to the CPU; it keeps track of which instructional station should be serviced next. A magnetic tape unit can be used to record and store information such as student performance records, i.e., all the data about the student.

CHAPTER III

USING THE MANUAL

The purpose of this manual is to provide a source of information on teaching strategies which may be used in the development of computer-assisted instruction. The strategies presented here are of three types: 1) over-all course strategies; i.e., those which present a general outline of an entire course; 2) strategies at the section level; i.e., those which present the strategy in a unit or part of a unit of a course; and 3) those which explain strategies at the frame, problem, or question level. Each type of strategy is presented in a separate section of the manual. The table of contents should assist the user in locating specific strategies in which he has particular interest.

Explanation of Terminology

This manual is intended to be general in nature. A knowledge of a special programing language (e.g., Coursewriter II, IBM Corporation, 1968) is not necessary. However, it is not possible to exclude the use of some terminology specific to programing for computer-assisted instruction. A brief explanation is given in the Glossary for those terms which have a special meaning in the field of CAI. In addition, certain terms from the field of education are defined to avoid confusion of meaning.

Programing Language

To assist in providing an answer to the question as to how instruction strategies are prepared for the computer, the following excerpt from the IBM 1500 Coursewriter II Author's Guide, Part I: Course Planning (IBM Corporation, 1967, pg. 25) is included here:

> The Coursewriter language is composed of individual instructions that can be logically separated into five major groups.
>
> Problem presentation.
> Presentation sequence control.

Response requests.
Response analysis.
Scorekeeping.

The problem presentation instructions are used to mark the beginning of a problem, to type and display instructional material, to play audio messages, and to project images from film reels.

The response request instructions enter and process student responses from the light pen and from the typewriter and instructional display keyboards. They also record audio messages, control the time allowed for responses and cause performance records to be written automatically (if the author has specified them).

The response analysis instructions determine whether a response is correct, incorrect, or unrecognizable. Special programming is built into the system to handle matching of responses automatically.

The scorekeeping instructions permit the author to channel into performance records the counts of a student's correct answers, wrong answers, time-outs, etc., and to post other special indicative information. They also permit the author to "capture" actual responses and work with them by executing special routines during answer processing.

The presentation sequence control instructions allow the author to provide several paths of instruction based on conditions that arise while students are actually taking the course. They also allow the author to link course segments as needed to complete course flow through an instructional session.

Course programing languages other than Coursewriter II provide instructions to carry out similar action. With systems dedicated to computer assisted instruction, changes and additions can be made in the programing language. Functions can be written to provide special processing not included as part of the programing language, and these functions can be accessed by the course. Thus, a great deal of flexibility is provided.

CHAPTER IV

FLOWCHARTING

Flowcharting is a means of presenting a course description so that it is easy to visualize and follow. Simple geometric figures are used to show the flow of the course through which a student may pass. A flowchart may be used while a course is being developed to experiment with the sequence of presentation or may be used as a means of communication between the curriculum specialist or course author and a programer. Flowcharts can depict major logical steps or any degree of detail desired and are commonly used as a means of documenting a program. An over-all course flowchart would indicate general steps without much detail; whereas a detailed program flowchart is a map of the program. A program flowchart should be labeled so that the associated instructions from the programing language are referenced; thus, understanding and modification of the course are both facilitated.

The flowcharting symbols included here are generally consistent with IBM flowcharting symbols. Since programing for computer-assisted instruction is different from programing for other purposes, the meaning of several symbols has been altered. For example, in flowcharting CAI programs, a few symbols have been adapted from those usually used only for flowcharting systems programs.

The symbols used for flowcharting in this manual all appear on the Standard Register Business Forms flowchart template (No. 1583).

Flowchart Symbols

The flowcharting symbols included in the following list are used in this manual:

Name	Symbol	Explanation
Processing		An instruction or group of instructions which do processing in the course (e.g., typing instructional materials, incrementing counters); used for processing not represented by other symbols.
Display	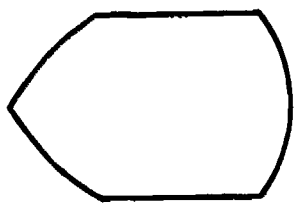	Information displayed by the image projector or supplementary handouts.
Input/Output	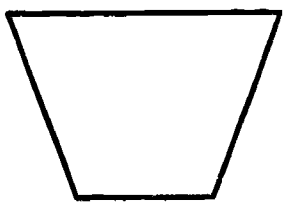	Processing by a special input or output device such as positioning or playing of an audio tape or use of a typewriter for proctor messages.
Decision	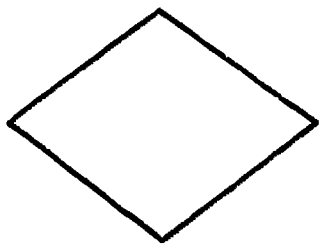	Place at which course flow can follow one of several paths; the condition associated with the path may be written on the associated line.
Flow		Direction of flow is indicated by arrowed lines; generally flow is from top to bottom and left to right.
		Half-circle is used to cross one flow line over another.

Name	Symbol	Explanation
Terminal		The beginning, end, or point of interruption of flow in a course or small section of a course.
Predefined Process	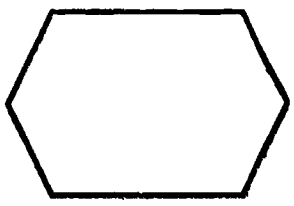	A group of operations not detailed within the particular flowchart (e.g., review); reference to a process explained elsewhere and incorporated at this point in the course (e.g., a subroutine or function).
Connector		An entry from, or an exit to, another part of the program flowchart; a set of two connector symbols is used to indicate continuous flow when use of a line is not feasible.

Principles of Flowcharting

In preparing the flowcharts in this manual, several principles have been adhered to:

1. Generally, the direction flow of the chart is from left to right and top to bottom.
2. Arrows are placed on each line.
3. Arrowed lines are as straight as possible, and in most cases, do not cross each other.
4. If many arrowed lines point to one block, they are merged into one line before entering that block.
5. Entry points of arrows generally are in the middle of the side of a block, except that decision blocks are entered and exited at vertices.
6. Each decision block has at least two exit points.
7. An explanation of the flowchart has been placed in a key with the number of each item in the key placed in a block on the chart.

Flowcharts with a separate key are used throughout this manual since the explanations are usually too lengthy to be included within the blocks of the diagram.

Explanation of Sample Flowchart

The following is an example of a flowchart of the type used in this manual. This example is quite general in nature; specific switches and counters used, text of questions, and feedback are not indicated. The flowchart could be an example of the course flow which the author desired and which is to be planned in detail by a programer.

The strategy of the sample flowchart "Recording Questions Answered Correctly" is as follows: A switch can be assigned to each question in a test. Prior to giving the test, all of these switches should be initialized to zero. When the student's response is correct, the switch associated with that question can be loaded with one. When the test has been completed, each switch can be tested, and the student can be given information concerning his incorrect responses.

13

Key to Flowchart - Recording Questions Answered Correctly

1. Start
2. Initialize all switches to be used to zero
3. Question is presented and student response given
4. Was response correct?
5. Add 1 to counter used to accumulate score
6. Load 1 into switch associated with question
7. Have all n questions been presented?
8. Number of correct responses displayed to student
9. Were all questions answered correctly?
10. Is switch n=1? (That is, was question n answered correctly?)
11. Information given concerning incorrect response; (this may be any number of steps)
12. Have all n switches been tested?
13. End of test

Sample Flowchart - Recording Questions Answered Correctly

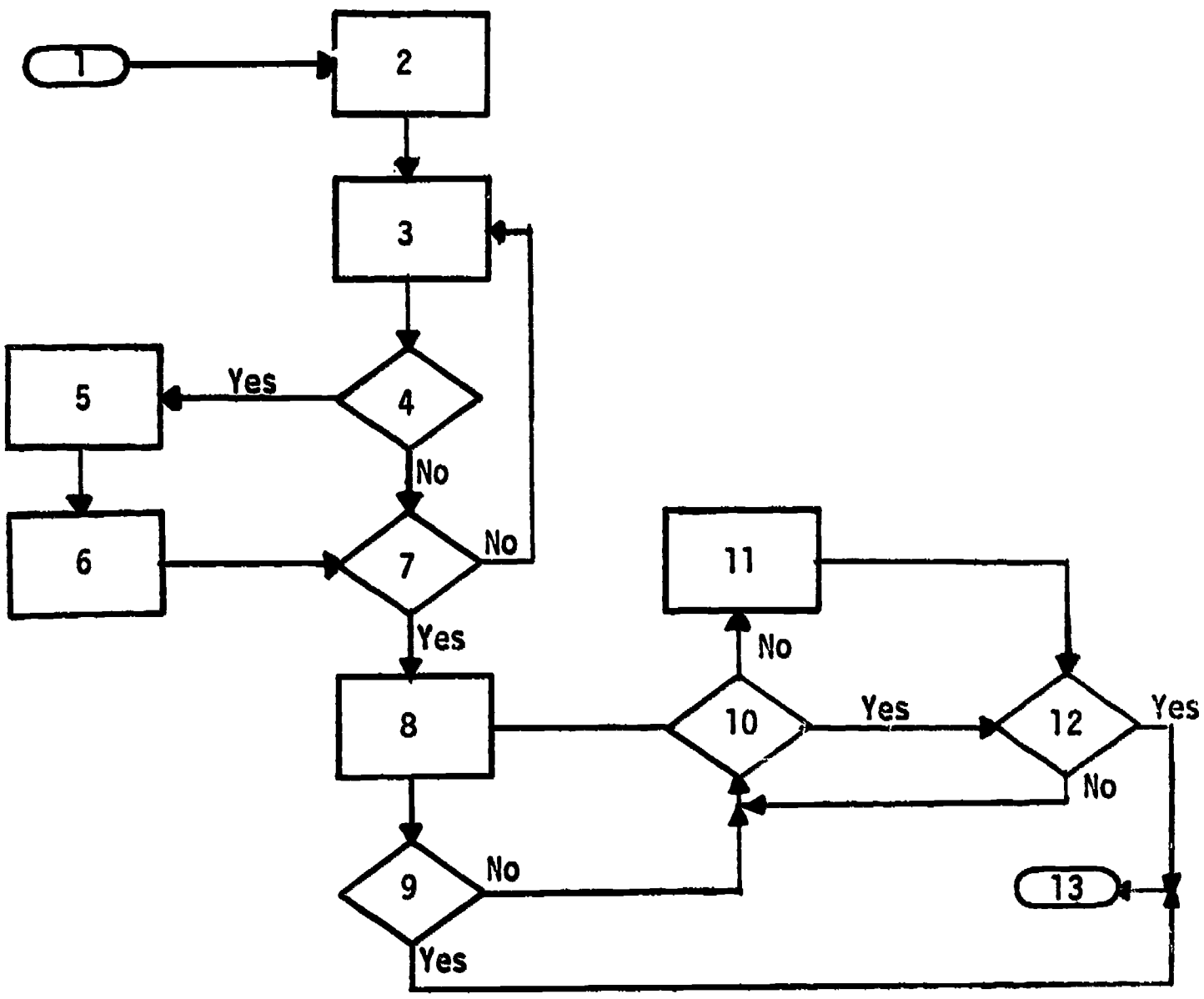

CHAPTER V

COURSE FLOWCHARTS

The flowcharts in this section represent over-all course strategies. Included are strategies which inform the student about course content, strategies based on performance of the student, and strategies in which the path that the course takes is determined by the student. Details about the method of presentation and course content are not included.

Strategies Informing Student about Content

Students may be able to proceed through a course with greater success if they are informed about the objectives of the course. Knowing what is expected of them, the students can work efficiently toward the objectives.

Objectives of Course Presented to the Student

An approach to instruction could be to present to the student, at his level of understanding, the objectives of the course. Broad objectives could be presented at the beginning of the course; and, at the beginning of each new unit, the objectives to be achieved from the unit instruction could be listed. Instruction would then be presented, possibly with a reminder periodically as to what objective the student is attempting to achieve. Following a period of instruction, the student could be asked to judge whether he had achieved each of the objectives. He could be given the option to have additional instruction, prior to the quiz on the unit, in those areas in which he lacks confidence.

The quiz would be designed to test for achievement of the specific objectives. Upon completion of the quiz, the student would be informed as to which objectives were achieved. For those objectives where a minimal level of achievement was not obtained, remedial instruction and another quiz could be given.

This procedure would keep the student informed concerning what is expected of him and his progress. Alternate approaches could be to replace presentation of the objectives of the unit with 1) presentation of concepts to be acquired and skills to be developed, and 2) presentation of key questions to be answered by the ensuing instruction.

Key to Flowchart - Objectives of Course Presented to Student

1. Start
2. Broad objectives of course presented
3. Objectives of unit n are presented to the student at the student's level of understanding
4. Instruction designed to achieve each of the objectives of unit n
5. Each objective of unit n is presented once again to the student, and he is asked to judge whether he has achieved each objective.
6. Do you want to select any sections for additional instruction?
7. Do you want additional instruction on objective n of unit n?
8. Additional instruction on objective n
9. Has student had the option to receive additional instruction on all objectives of unit n?
10. Quiz on unit n
11. Analysis of quiz results to determine which, if any, of the objectives were not achieved
12. Is remedial instruction required?
13. Remedial instruction on sections determined by results of quiz
14. Quiz questions on those sections that required remedial instruction
15. Was criterion met on the quiz?
16. Proctor message is sent to proctor station indicating the specific deficiencies of the student; off-line instruction would be given. When the student had achieved criterion on an off-line quiz similar to his most recent quiz, instruction then could proceed.
17. Next unit of course

Objectives of Course
Presented to Student

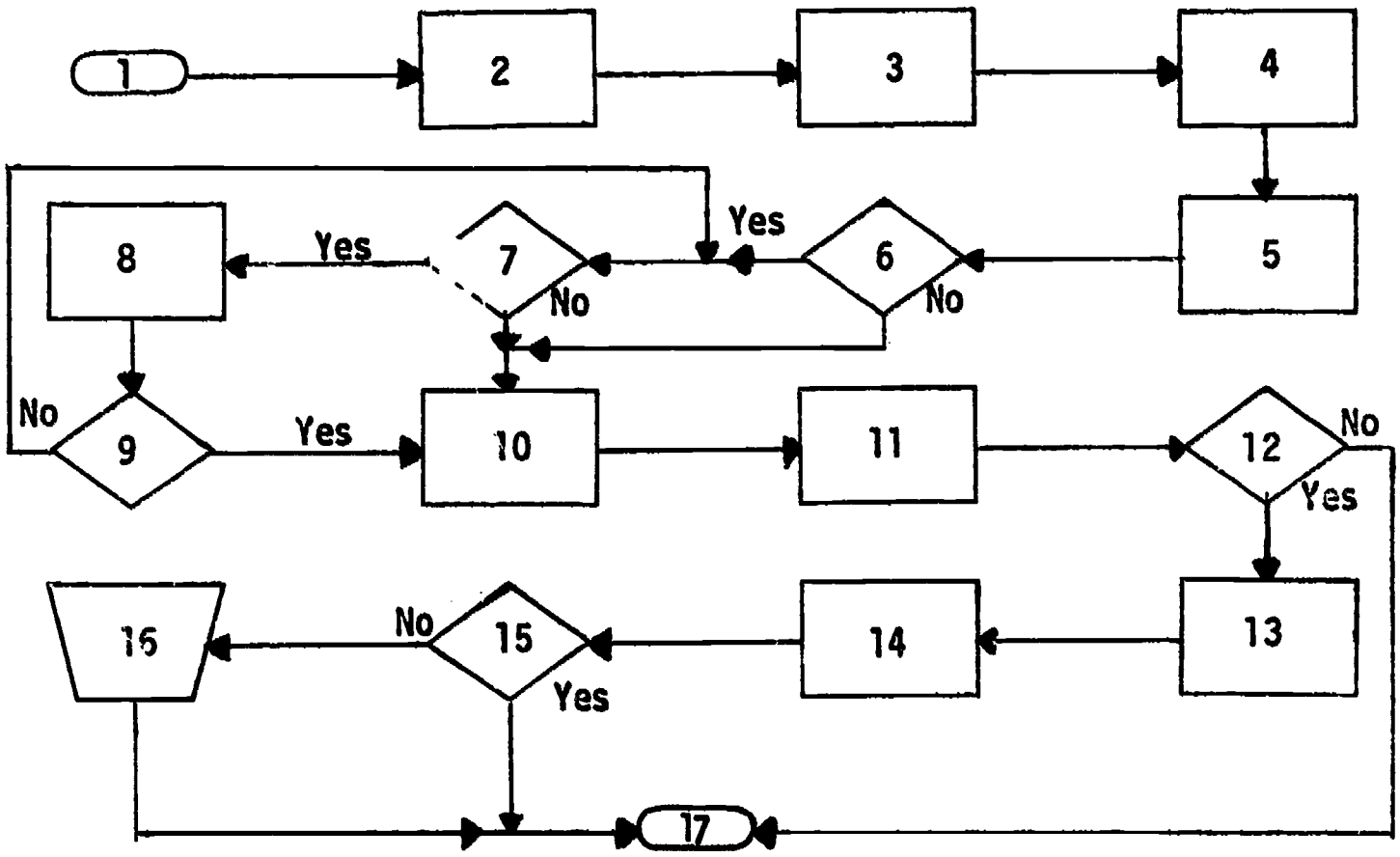

Objectives Stated Prior to Module Instruction with Option to Repeat Modules

Instructional content often can be separated into somewhat independent modules of instruction with several modules forming a logical unit of instruction. If the student is informed concerning the objectives of the unit of instruction to follow, he can approach the instruction from a more knowledgable viewpoint. If, in addition, the unit is summarized by modules, the student can select confidently those modules in the unit that he should repeat.

Key to Flowchart

Objectives Stated Prior to Module Instruction with Option to Repeat Modules

1. Start
2. Objectives to be achieved in unit n are presented
3. Module of instruction in unit n
4. Is this the first time the student has received the instruction in this module?
5. Have all modules in the unit been presented?
6. Summary of unit n
7. Do you wish to repeat any of the modules in unit n?
8. Module is selected
9. Has entire course been presented?
10. End

Objectives Stated Prior to Module Instruction with Option to Repeat Modules

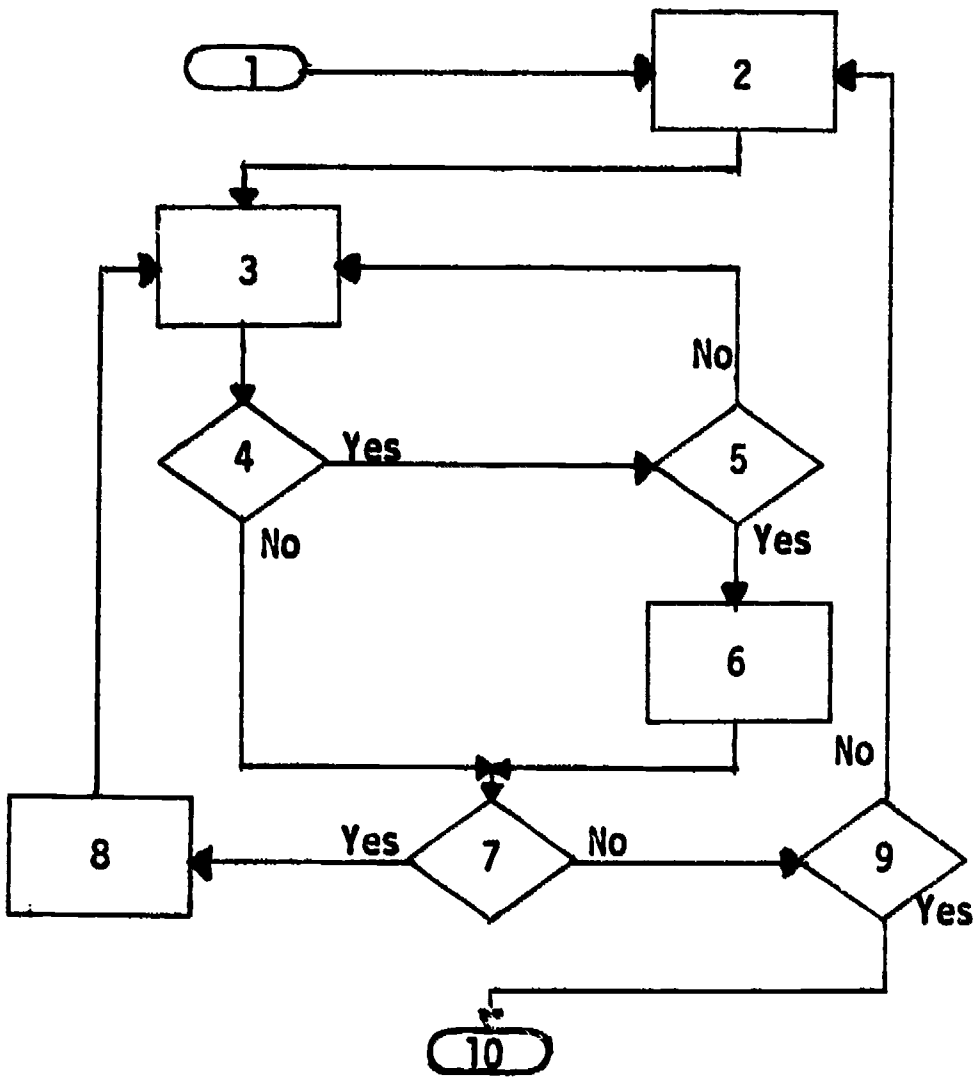

Strategies Based on Performance

A common technique in computer-assisted instruction is to accumulate data on the individual student's aptitude or his performance while taking the course, and then to use this information to determine what path the student should follow through the course.

Sequence Based on Diagnostic Tests

The student is introduced to the program, receives basic directions, and is given a diagnostic test on specific concepts to determine with which, if any, he needs help. Depending on the results of the test, he is branched to sections which give instruction on the concepts on which criterion level was not achieved. The student is then given an exercise on what he has learned; and a posttest, designed to evaluate his learning, is administered.

Key to Flowchart - Sequence Based on Diagnostic Tests[1]

1. Start
2. Introduction to the computer and basic directions
3. Diagnostic test to determine the concepts with which the student needs help
4. Student's score on concept n in diagnostic test is evaluated. If student understands concept n well enough to achieve the desired criterion on the diagnostic test, he is branched to further instruction on concept n (block 5). If student meets the criterion level, he is branched to the next decision point where it is decided whether or not he meets criterion on concept n + 1 (block 6).
5. Instruction on concept n
6. Have the results of the diagnostic test been used for all concepts tested?
7. An exercise is provided in which the student uses the material under study
8. A posttest similar to the diagnostic test is given and results used to evaluate student's learning
9. Stop

---

[1]From Penn State's course segment Spelling, Project 5-85-074, IBM 7010 or 1410; authors: Helen L. K. Farr, Harriett A. Hogan.

Sequence Based on Diagnostic Tests

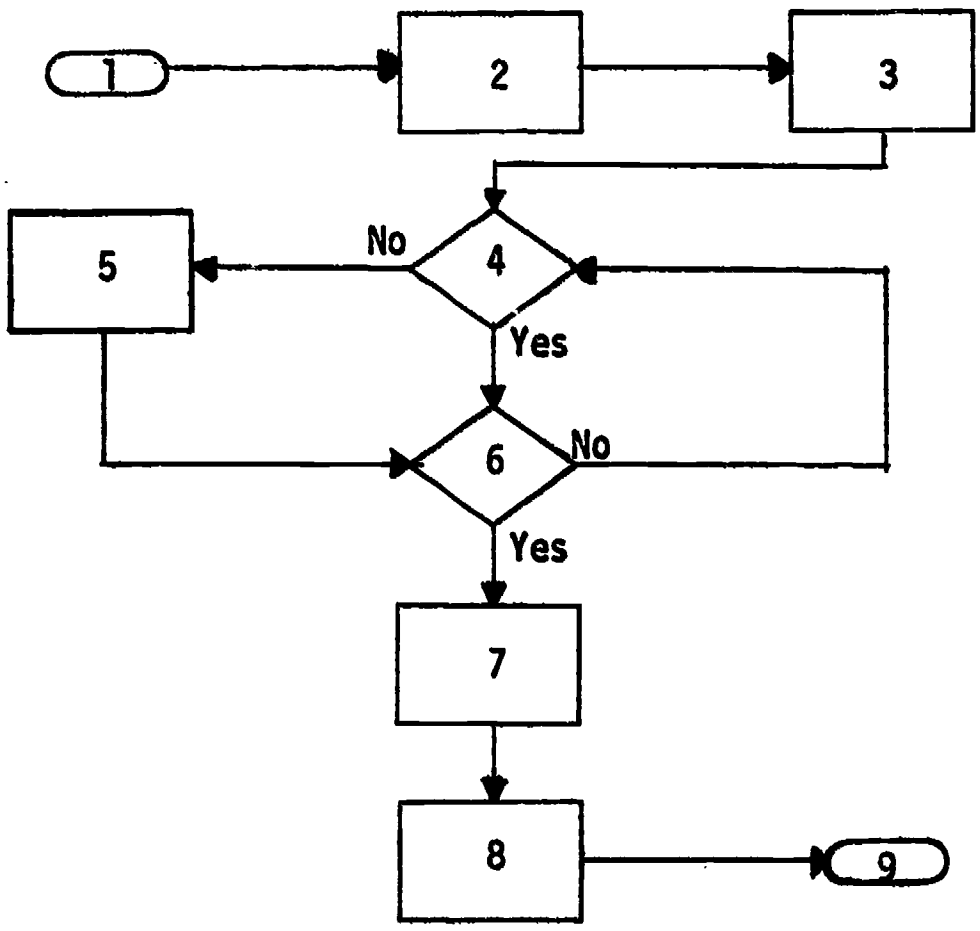

Course Presentation in Three Tracks

It may be advantageous from both the programing and educational viewpoints to administer pretests (IQ, aptitude, and achievement in subject area) at the beginning of a course, analyze these pretests critically, and use the results to place each student in one of three course presentations or tracks. The three tracks would instruct in the same concepts; however, each presentation would differ because of the type of student for which it was designed--below average, average, and above average.

The instruction for the below average would contain a minimum number of concepts--those concepts which must be mastered for successful completion of the course (i.e., the concepts required to "pass" the criterion test). On this path through the course, much drill work would be available for those students requiring additional exercises. At many points, a series of questions would be asked and a decision would be made regarding whether or not the student should receive remedial work. Feedback would be designed to encourage the slow learner.

The course presentation for the average student would include the basic concepts, additional concepts, some applications or more advanced exercises. Feedback would be clear but not remedial in nature.

The instruction for the above-average student would include all concepts, enrichment materials, and advanced exercises. Instruction in concepts would proceed with as few steps as possible to achieve the objectives. Feedback would be concise.

At appropriate points in each of the three presentations which would be equivalent sections in the course outline, criterion quizzes designed for the level of instruction would be administered. At these points, decisions can be made regarding the student's specific needs, whether or not he should receive 1) a higher or lower level presentation; 2) a recapitulation of the most recently completed section; 3) enrichment activities, or 4) involve the student in off-line activities? The decisions would be based on a combination of three aspects: 1) the level of performance on the quiz, 2) the time the student has taken to complete the most recent section, and 3) the total time on the course thus far. For example, a student on the lowest level of instruction may have an acceptable, although not extremely high, score on the criterion quiz and may have proceeded very rapidly to this point in the course,

indicating that very few errors were made in the instructional questions and that drill and remedial work were not required. Therefore, this student can be placed in the higher, more challenging level of instruction for the next part of the course.

Key to Flowchart - Course Presentation in Three Tracks

1. Start
2. Analysis of pretests
3. Should instruction proceed in the track for above average achievers (track 1)?
4. Should instruction proceed in the track for average achievers (track 2)?
5. Highest level presentation (track 1) of instruction on concepts in section n
6. Criteria questions in track 1 on concepts presented most recently
7. Should enrichment activities or advanced exercises be included here?
8. Enrichment activities or advanced exercises
9. Decision is made and recorded whether the track of presentation should be lowered to average-level instruction
10. Have all sections in this unit been presented?
11. Average-level presentation (track 2) of instruction on concepts in section n
12. Criteria questions in track 2 on concepts presented most recently
13. Decision is made and recorded as to whether or not the track of presentation should be raised, lowered, or remain in the average track
14. Below-average presentation (track 3) of instruction on concept(s) in section n
15. Criteria questions in track 3 on concepts presented most recently
16. Should a recapitulation of the instruction be given?
17. Recapitulation of recent instruction
18. Decision is made and recorded whether the track of presentation should be raised or remain at the below-average presentation
19. Unit exam is given and grades are assigned by consideration of exam score and most recent track of presentation
20. End of instruction or next unit

Course Presentation in Three Tracks

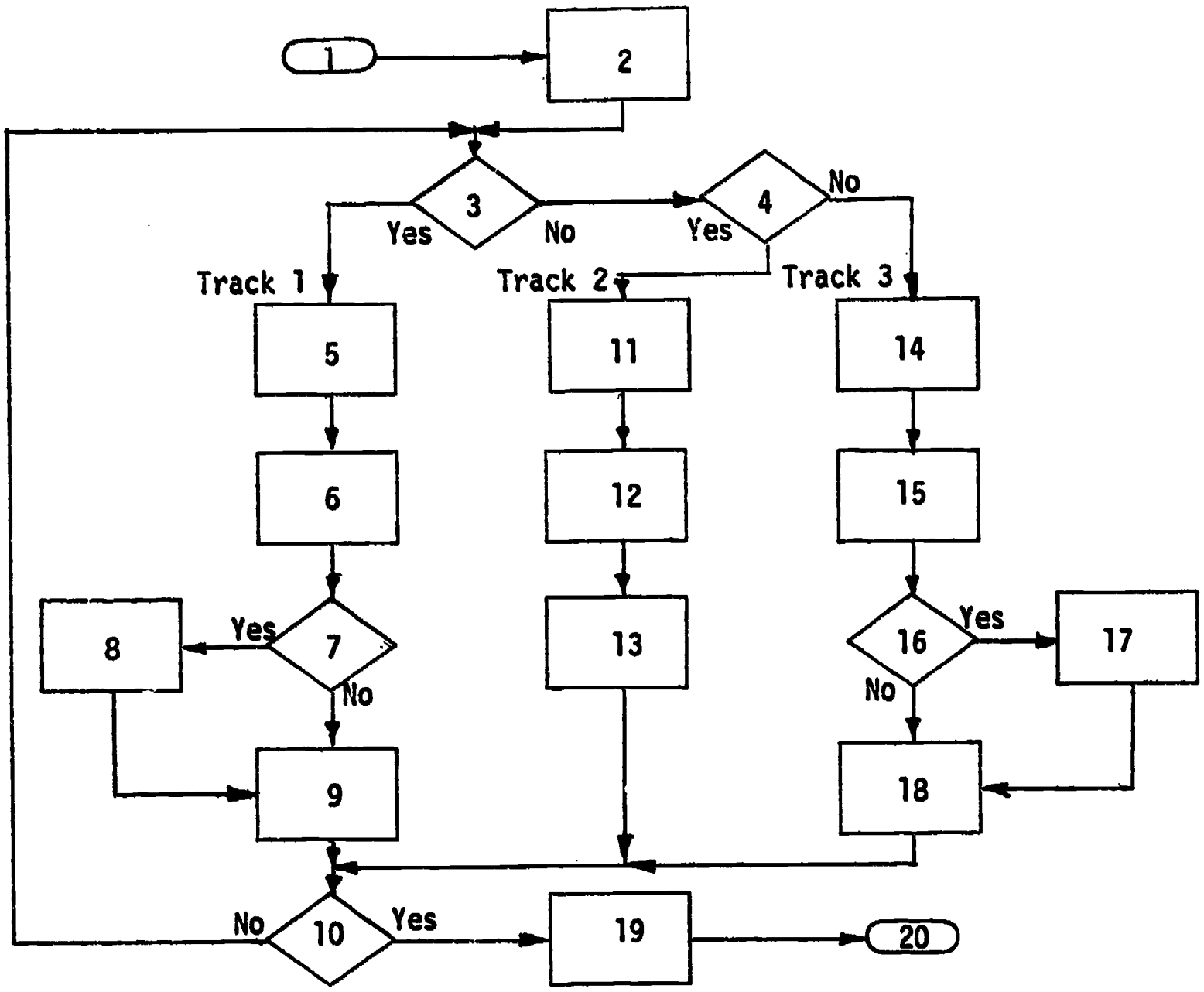

Flexible Strategy for Slow, Average, and Advanced Students

This strategy allows for slow, average, and advanced students to proceed through a course. The advanced student has the shortest and most direct route through the course. Each student receives a body of instruction and questions. Students are branched to remedial, review, or advanced materials according to performance on criterion items.

Key to Flowchart - Flexible Strategy for Slow, Average, and Advanced Students

1. Start
2. Instruction and questions on concept n for all students (slow, average, and advanced)
3. Quiz on concept n
4. Is the score on the quiz indicative of a need for review?
5. Does the score on the quiz indicate that the student has a background for advanced work?
6. Advanced instruction and questions
7. Does the student need review on the advanced instruction?
8. More advanced instruction and questions
9. Review on advanced instruction just presented
10. Review instruction and questions
11. Does the student need additional remedial instruction?
12. Remedial instruction and questions
13. Have all concepts been presented?
14. End

Flexible Strategy for Slow, Average, and Advanced Students

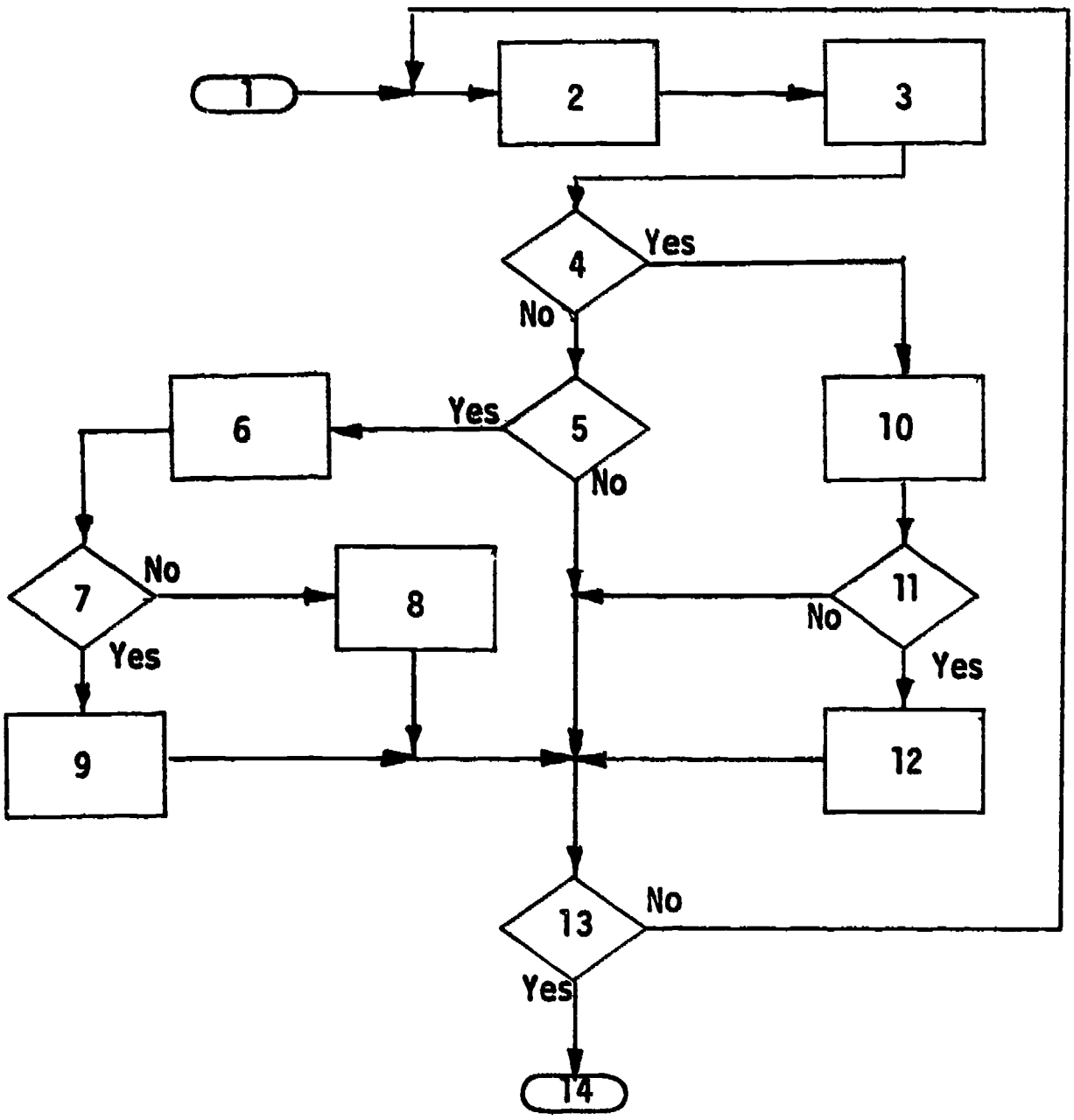

Shorter Sequence for Better Student

This flowchart demonstrates a procedure for getting the better student through the material at a rapid rate, but will also present a review of the type of material he may elect to skip.

Key to Flowchart - Shorter Sequence for Better Student

1. Start
2. Presentation of section n
3. Quiz
4. Did the student know the content well enough to proceed?
5. Rapid preview of the next section
6. Student is asked whether he would like to skip the next section
7. Is there more material to present?
8. End or test

Shorter Sequence for Better Student

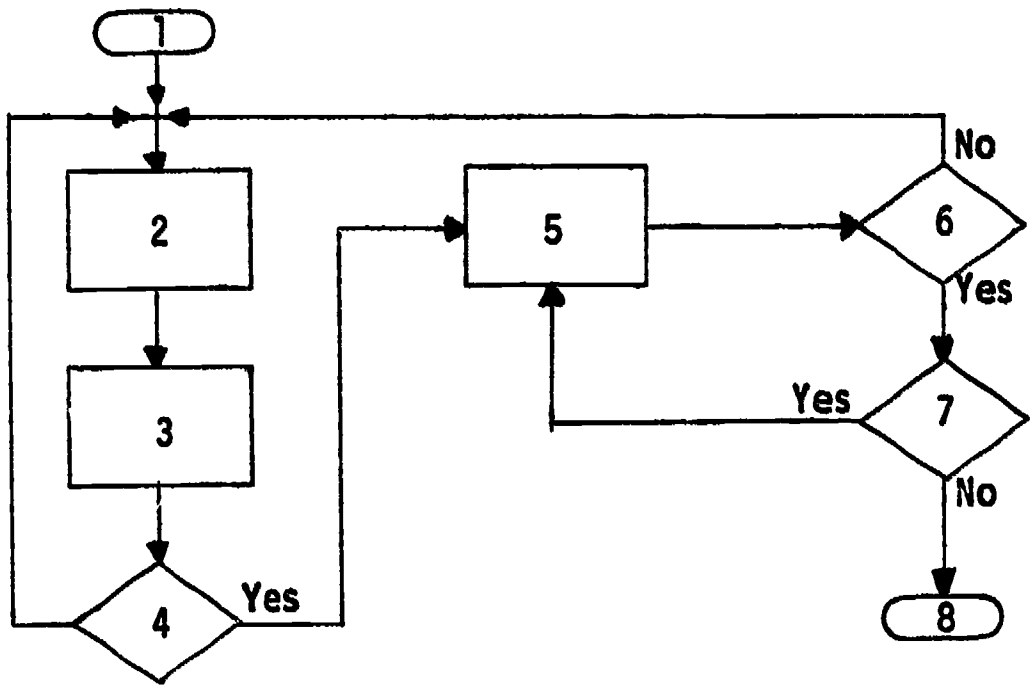

Sequence and Review
Based on Errors Made

Student is given a choice of receiving instruction or a quiz first. If he chooses instruction, he receives a quiz after the instruction. The quiz is analyzed and a branch is made depending on the number of errors made. If errors are greater than a certain percentage, the student is branched back to instruction. If the number of errors is less than a certain percentage, he is given a review on those items which he answered incorrectly. If he has no errors, he continues in the course.

Key to Flowchart - Sequence and Review Based on Errors Made[2]

1. Start
2. Choice of instruction or quiz
3. Instruction which could include any number of steps
4. Quiz on instructional material from Block 3
5. Branch depending upon number of errors in quiz: (If there are no errors, student goes on to new section. If criterion was met, student is given review on the questions he answered incorrectly. If criterion was not met, student is branched back to instruction.)
6. Review is available on all questions; however, student is given review on questions he answered incorrectly
7. Continuation of course

[2]From Penn State's course segment Scientific Notation, Project No. 5-85-074, IBM 7010 or 1410; author: Joseph Ritchey.

Sequence and Review
Based on Errors Made

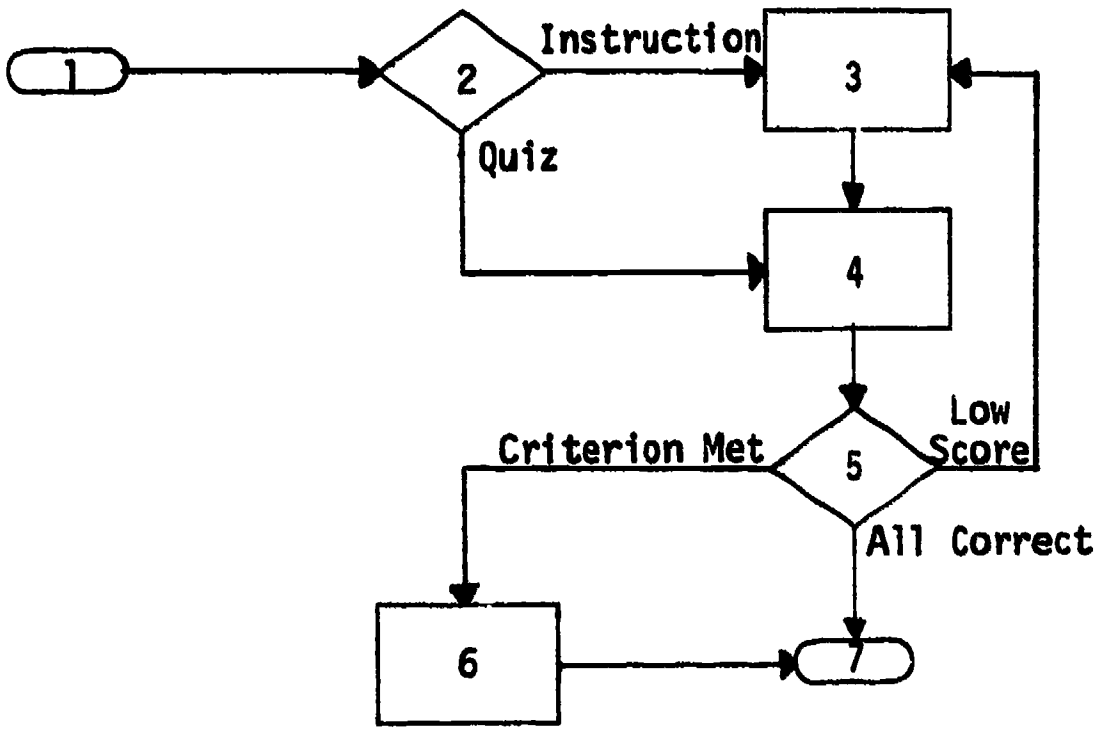

Hierarchical Instruction Beginning at Highest Competency of Student

Some disciplines, such as mathematics and physics, lend themselves to a hierarchical design in which the contents of a course can be separated into competencies which are related in such a manner that capability in certain areas is a prerequisite for success in areas higher in the hierarchy (Briggs, 1968).

To avoid wasting time instructing a student in content areas of a course in which he already has competency, the course can begin with a quiz on the skills and concepts in the highest competency in one branch of the hierarchy. If criterion is met on the quiz, another branch of the hierarchy can be entered. If criterion is not met on the quiz, a quiz can be administered on the next lower level of the hierarchy. If criterion is met, instruction begins at the next higher level of the hierarchy; if criterion is not met, a quiz would be administered on the next lower level of the hierarchy. This procedure would be followed until the level for which the student had the necessary prerequisites was determined.

When a branch of the hierarchy is successfully completed, another branch would be entered at the highest level, and the same logic would be followed.

Key to Flowchart

Hierarchical Instruction Beginning at Highest Competency of Student

This flowchart gives the logic involved in one branch of the hierarchy of the course content.

1. Start
2. Quiz on the competencies of the highest level of this branch of the hierarchy
3. Was criterion met on the quiz?
4. Quiz for the competencies at the highest level of another branch of the hierarchy
5. Did the student come to the criterion quiz after receiving instruction at the highest level of this branch of the hierarchy?
6. Quiz on the competencies of the next lower level (level 2) of the hierarchy
7. Was criterion met on the quiz?
8. Has student received instruction at this level two successive times without achieving criterion?
9. Instruction on the highest level (level 1) of this branch of the hierarchy; (The instruction may include remedial instruction for the student passing through the instructional sequence a second time after failing to meet the criterion on the quiz.)
10. Quiz on the competencies of the next lower level (level 3) of this branch of the hierarchy
11. Was criterion met on the quiz?
12. Instruction at level 2 of this branch of the hierarchy
13. Processing may continue in one of three ways:
    a. Quiz on the next lower level of the hierarchy with the same logic being followed as the logic for other criterion quizzes
    b. Branch to another section of the course which is considered to be a prerequisite for this branch of the course
    c. Instruction at this level, which would be the lowest level of this branch of the hierarchy

Hierarchical Instruction Beginning at Highest Competency of Student

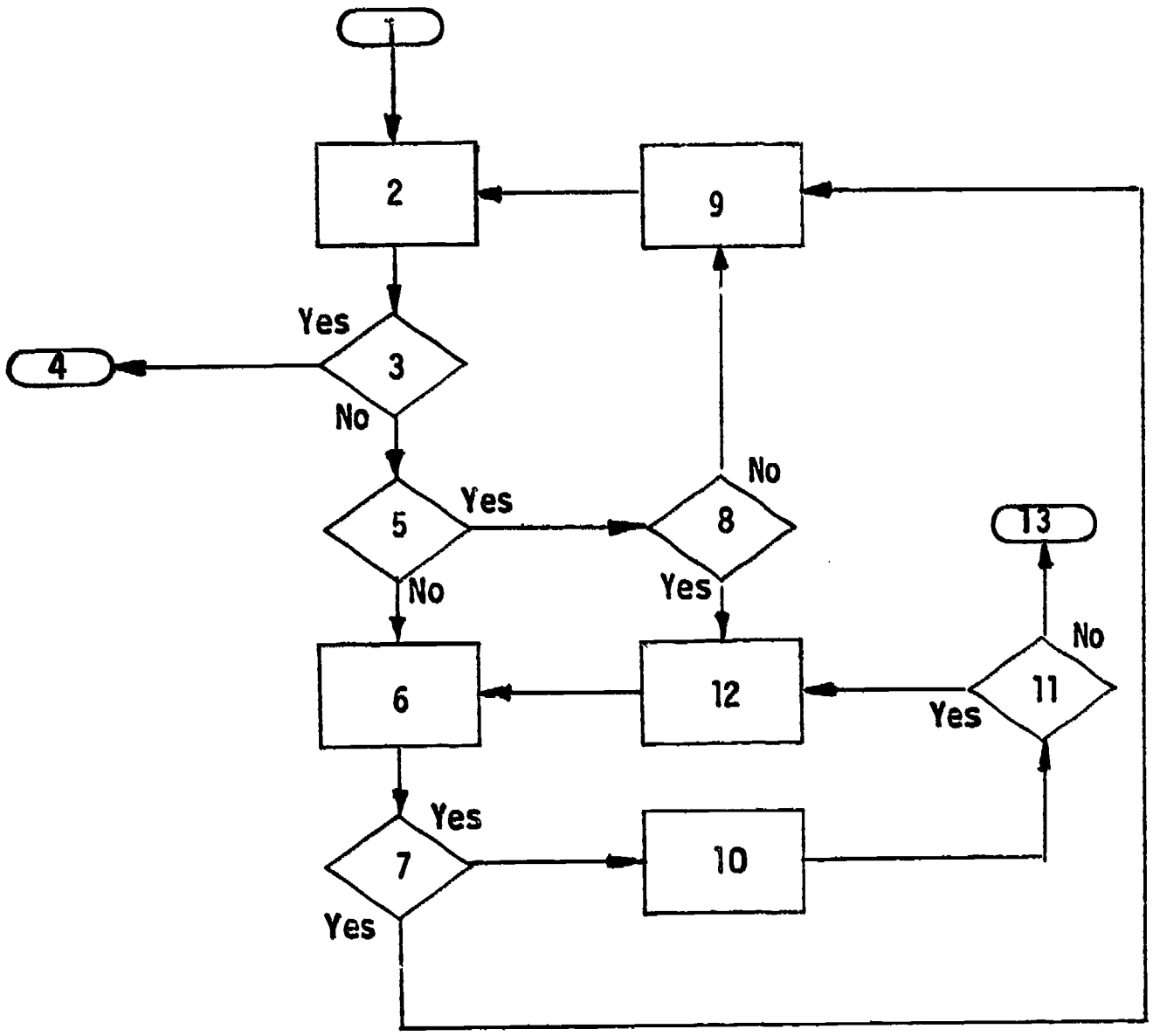

Student-Selected Sequences

There are instructional sequences wherein it may be desirable to deviate from a definite order of presentation within a specified framework and allow a student to make a choice in regard to the presentation of material. The nature of choice may vary. Options provided could be to 1) skip sections of a course, 2) select the order to study required topics, or 3) choose to review or not.

Student Choice of Additional Practice or Test

The student has the choice of receiving an explanation, practice problems, or a test. The practice and test problems are the same type of problems and are randomly generated by the computer. The only difference between doing practice problems and the test is that during the test counters are used and the student must answer so many consecutive problems correctly in a certain period of time in order to proceed to the next section of the course.

Key to Flowchart - Student Choice of Additional Practice or Test

1. Explanation of options available; student makes his selection
2. Did the student choose to take the test first rather than having the explanation or practice?
3. Zero is loaded into switch n which records that the student is doing problems for the test
4. Did the student choose to have the explanation of procedure?
5. Explanation of procedure is given and the student proceeds with practice problems
6. One is loaded into switch n which records that the student is doing problems for practice
7. Problem randomly generated by the computer is presented to the student
8. The student responds
9. Was the response correct?
10. Branch depending upon switches and counters; (If student is doing practice problems or has met the criterion on the test, response latency is given next. If more test problems are required, student receives a new problem.)
11. Counter used to count number answered correctly in test is incremented
12. Response latency typed out to student at end of each practice problem and at end of test
13. Branch depending upon whether student is doing practice problems or the test
14. Student has choice of more practice problems or the test
15. Branch depending upon response latency on the test
16. Next section of course similar to this one
17. Initialize to zero counters and switches for student taking test in order to record how many consecutive problems answered correctly
18. Since student did not match the correct answer, the correct answer is stated along with an example of how it was arrived at
19. Is student taking test? If student is doing practice problems, he goes back to the same question and answers it again; if doing test, counters and switches are initialized to zero

Student Choice of Additional Practice or Test

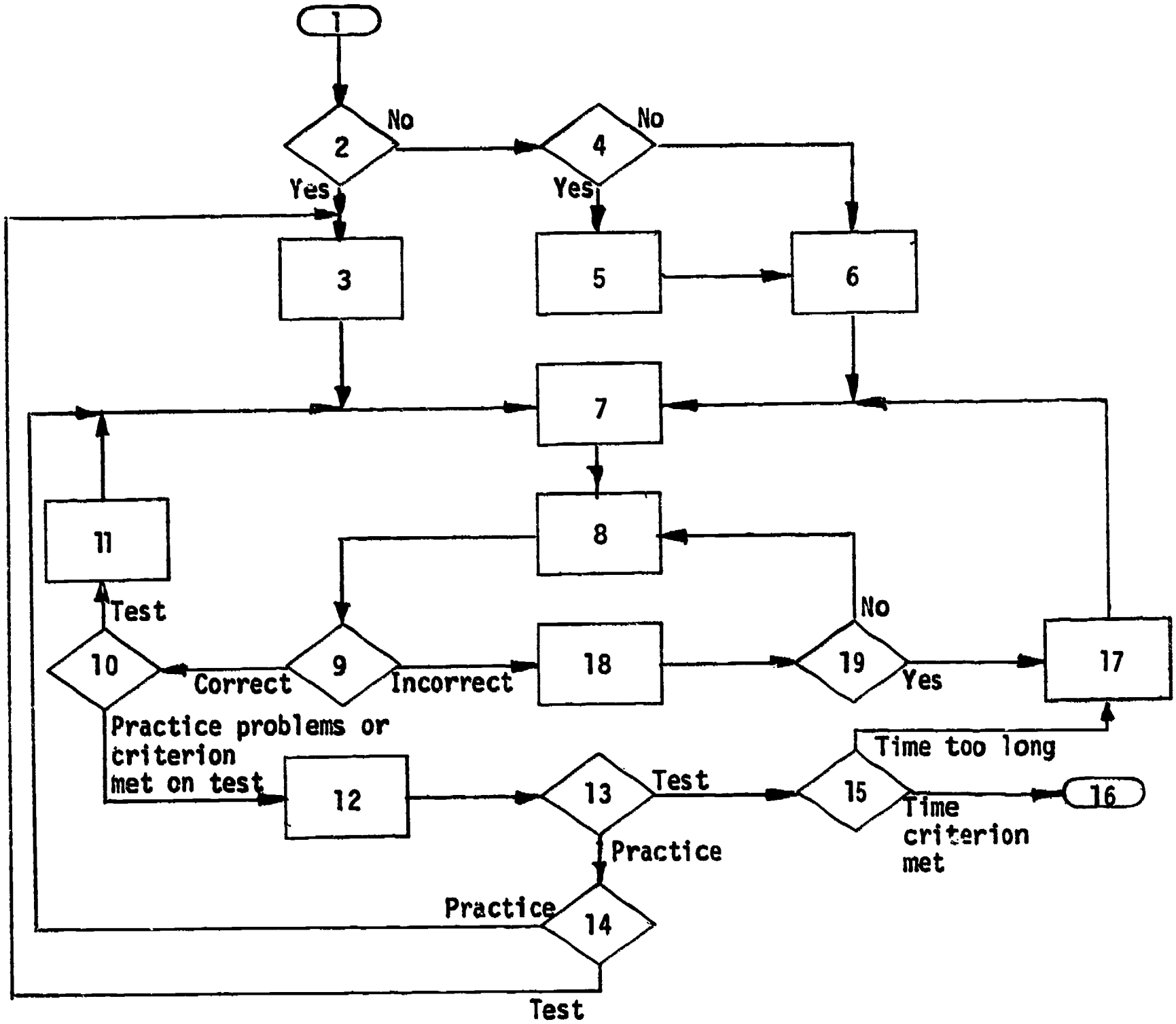

Student Given Option to
Skip Sections of Course

This flowchart diagrams a course divided into one or more sections. For each section, the student is given a preview and possibly given an option to skip that section. After all sections are completed or skipped, the student is tested on those sections he selected to skip. If the test reveals insufficient competency he is branched back to these sections for additional instruction.

Key to Flowchart - Student Given Option to Skip Sections of Course[3]

1. Begin
2. Preview of section n, including a content outline
3. Is the student following a flexible sequence? (This can be determined by a pretest, by the instructor, or by previous work in the course.)
4. "Do you want to skip this section?"
5. Presentation to section n material
6. Did the student know the material well enough to proceed?
7. Remedial instruction given on section n
8. Student is allowed to decide whether or not he will receive a repeat presentation of the material in the section just covered; option is given even if student achieved criterion
9. Has the student been through the entire course prior to this?
10. "Did the student skip section n?" Beginning with the first section, a check is made to determine which sections were skipped
11. Test on section n
12. Did the student do well enough on the test?
13. "Do you want to study section n?" Option is given even though criterion was met
14. Has student completed or been tested on all sections?
15. End

[3]From Penn State's course segment Audiology, Project No. 5-1194, IBM 7010 or 1410; authors: Bruce M. Siegenthaler, Jeffrey Katzer.

Student Given Option to
Skip Sections of Course

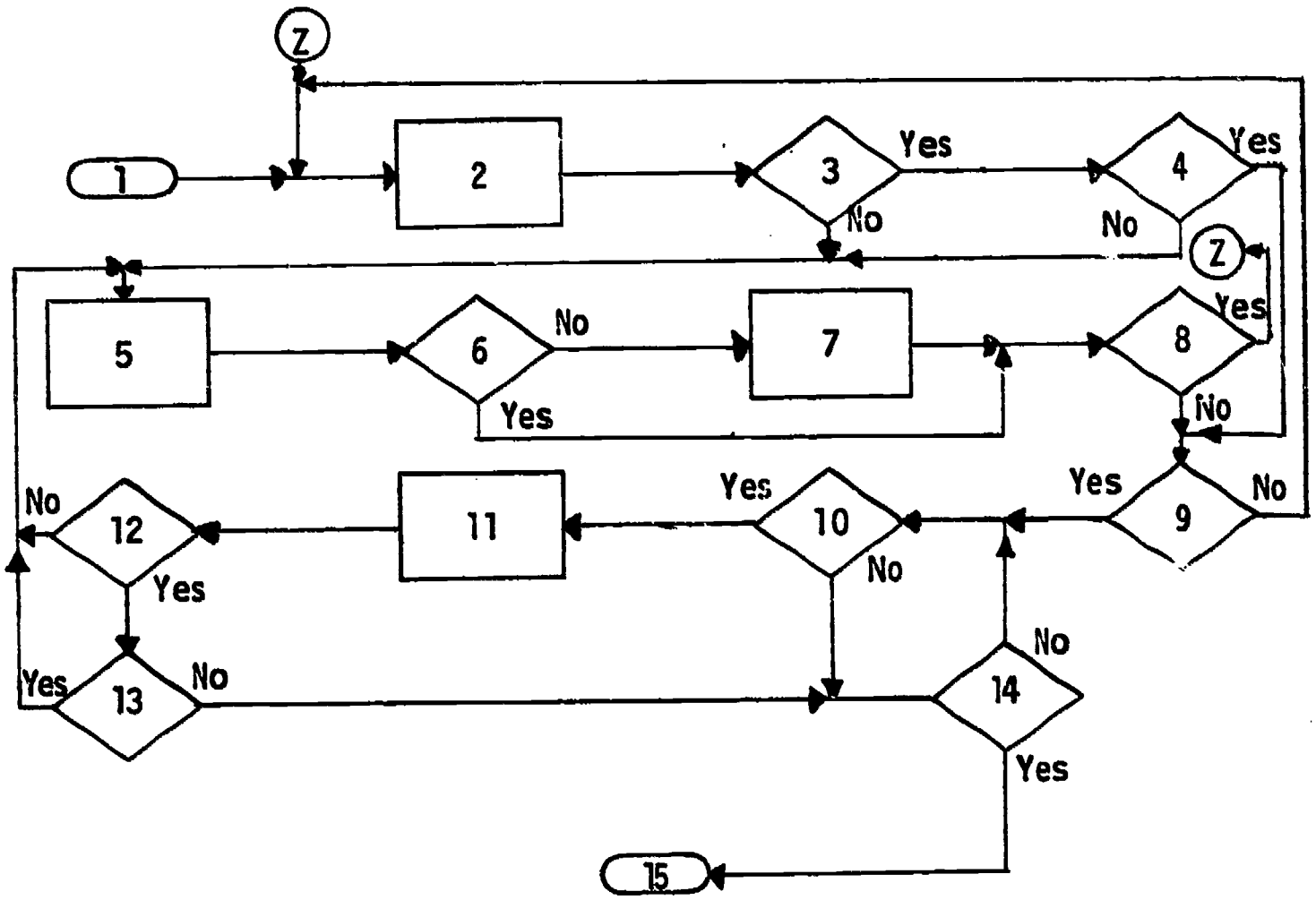

Type of Sequence Through
Course Chosen by Student

Student is given the choice to proceed through the regular programed sequence, a self-structured sequence, or a quiz. If he chooses the regular programed sequence, he goes through each of the concepts in order and then to the quiz. If he chooses the self-structured sequence, he can go through the instruction on the concepts and quiz questions on each concept in any order he chooses. If he chooses the quiz, he gets an opportunity after the quiz is completed to choose the concepts he would like to review. Depending upon his score on the quiz and the way in which he has chosen to go through the program, he is given various kinds of feedback. The feedback may consist of his score, an explanation of those questions he answered incorrectly, an explanation that goes along with each item under each multiple-choice question that student can choose, and a statement telling him on which concepts he has shown competency.

Key to Flowchart - Type of Sequence Through Course Chosen by Student[4]

1. Start
2. Introduction
3. Choice of programed sequence (A), self-structured sequence (B), or quiz (C)
4. Instruction on concept n
5. Branch depending on choice made in step 3; for the regular programed sequence, steps 4 and 5 are repeated as many times as the number of concepts to be presented, each time a new concept being presented.
6. Have all concepts been presented?
7. Choice of instruction on any of the concepts or the quiz on these concepts
8. Quiz on concept n; for regular programed sequence, quiz includes all concepts
9. Branch depending on choice made in step 3 (A, B, or C)
10. Score on most recent questions revealed to students and opportunity to review specified concepts given and carried out
11. Branch depending on choice made in step 3 (B or C)
12. Branch depending on total quiz score
13. Student told that all answers were correct
14. Branch depending on choice made in step 3 (A, B, or C)
15. Statement made to student concerning completion of instruction
16. End
17. Branch made depending on choice made in step 3 (A, B, or C)
18. Student is told on which concepts he is competent and those on which he needs instruction
19. Choice of going to end or back to point where choices can be made of the concepts on which to receive instruction
20. Explanation given on each response which was incorrect
21. Branch depending on choice made in step 3 (A or B)
22. Student can select from all quiz questions and receive explanations regarding them.
23. Student can choose whether to go to end or to be given opportunity to review.

---

[4]From Penn State's course segment Educational Measurement, Project No. 5-85-074, IBM 7010 or 1410; authors: Keith A. Hall and Harold E. Mitzel.

Type of Sequence Through Course Chosen by Student

A. Regular Programmed Sequence

B. Self-Structured Sequence

C. Quiz

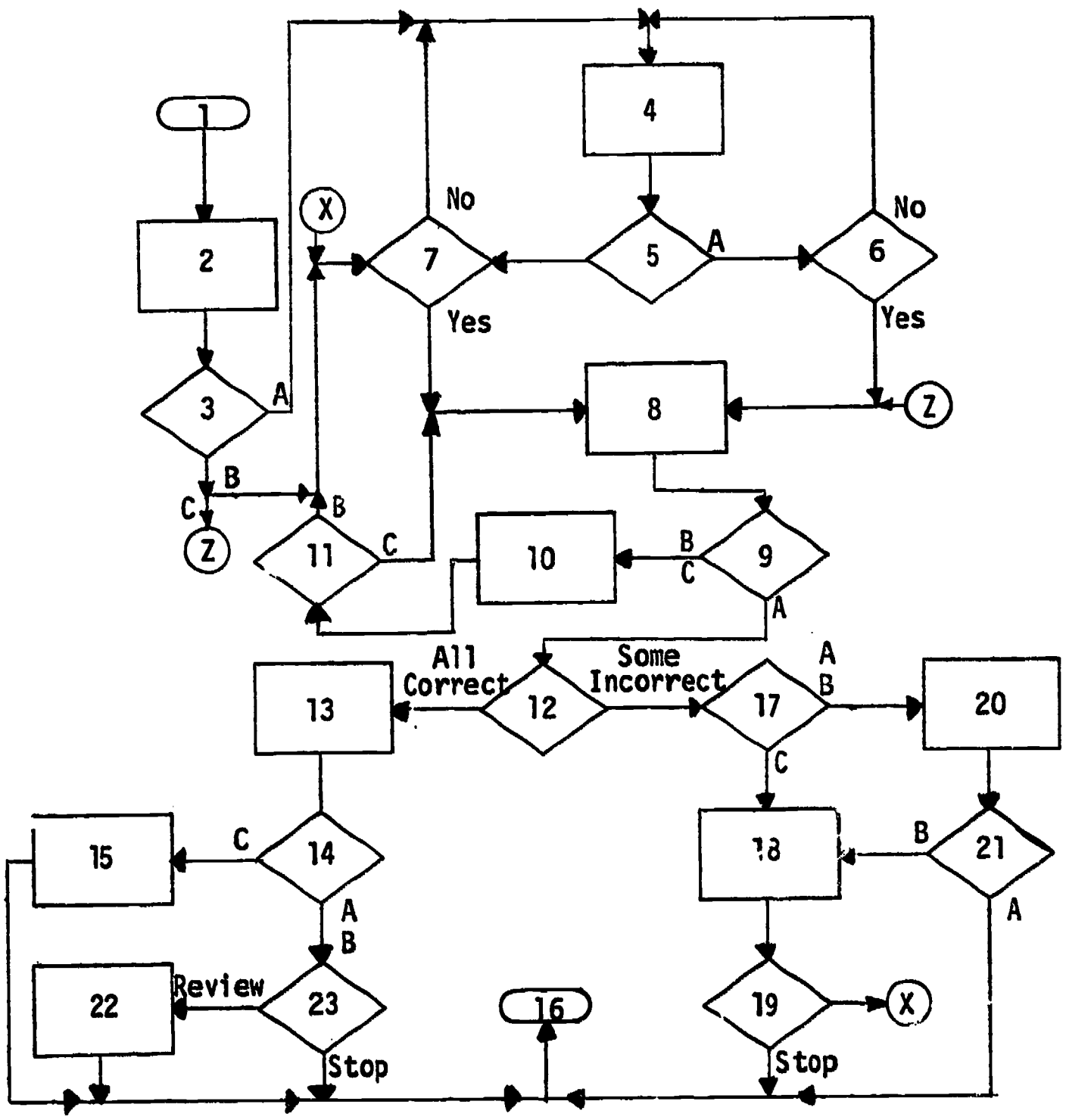

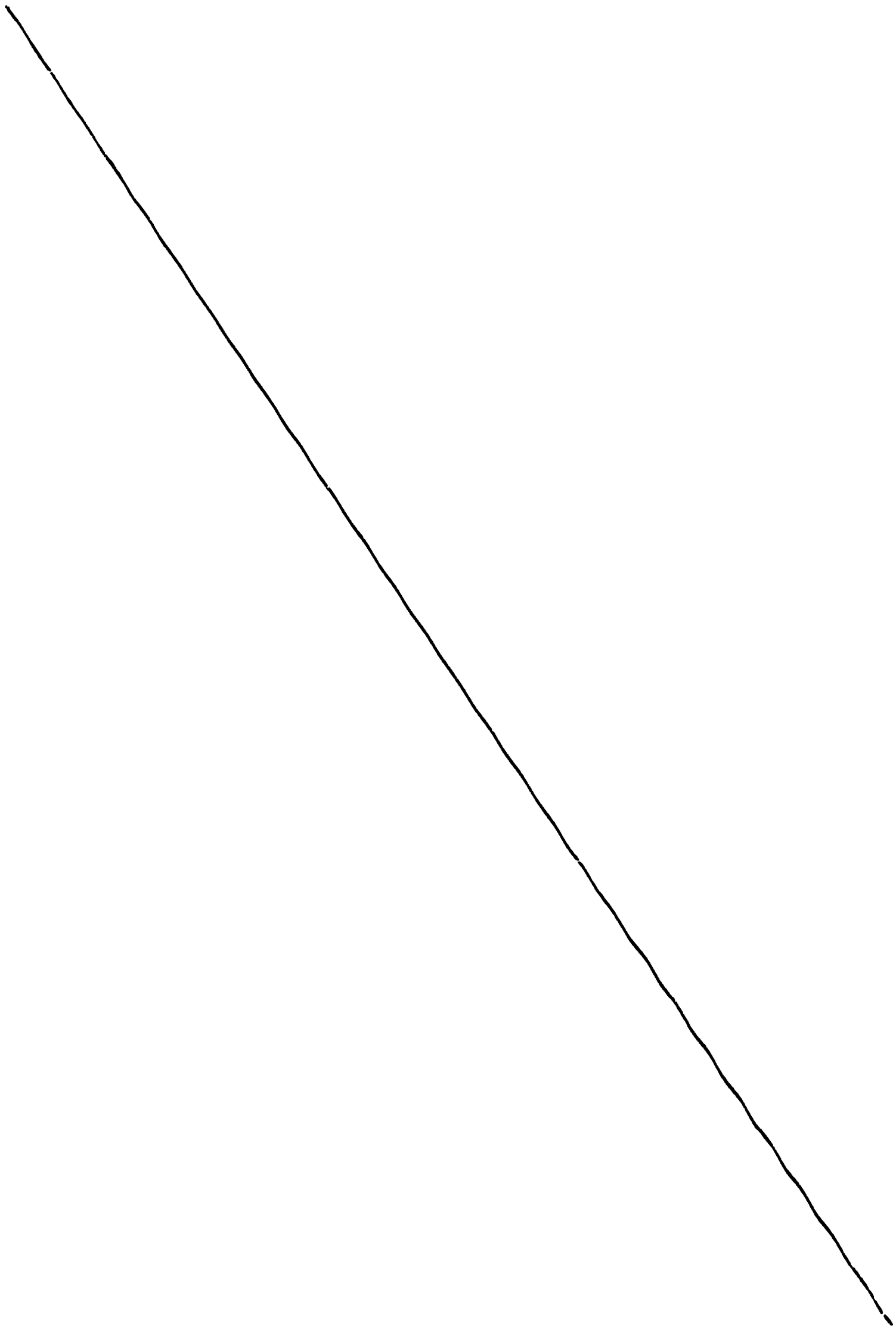

Student-Control of Course Content

A "map" of the entire course is shown to the student at the beginning of the course. The map would consist of interrelated blocks containing the topics included in the course. The student may select any segment of this map for further scrutiny. At this point he is given a more close-up view of the segment that he selected. He can continue this process of going deeper and deeper into the course material or into the maps, or he can indicate that he wants to withdraw one step or move sideways to another map region at the same level in which he is working. At any time, the student may go back to the main map (Grubb, 1968).

This method provides a great deal of flexibility for the student in selecting the material that he wishes to work with and yet gives him a reference point to the other materials in the course. A flowchart of this nature could be adapted to a course designed to be a source of information available to the student; the student could skip around in a "library" of information to do his research.

Key to Flowchart - Student-Control of Course Content

For simplicity, in this flowchart maps at three levels are shown. A course could include any number of levels.

1. Start
2. Main map of the course is shown to student; (sections on the main map could be descriptive chapter titles)
3. Did the student choose to explore section 1 further?
4. Sections 2, 3, and so on, all of which have flow similar to section 1
5. Map indicating subsections of section 1 is shown to the student; (this map could be chapter subtitles)
6. Was "main map" chosen?
7. Was a related section at the same level selected?
8. Was subsection 1 chosen by the student?
9. Subsections 2, 3, etc., of section 1; each is similar in flow to subsection 1
10. Items for study within subsection 1 are shown in map form to the student
11. Was "main map" chosen?
12. Was a related subsection at the same level selected?
13. Was the subsection map for section 1 selected?
14. Was item 1 of the map selected?
15. Items 2, 3, and so on of subsection 1; the flow in each is similar to that of item 1
16. Instruction on item 1; (within each phase of instruction, the student is allowed to select different topics for study by choosing other parts of the course map)
17. Did the student choose to go back to the "main map?"
18. Did the student select related instruction in subsection 1?
19. Did the student select the subsection map for section 1?
20. Did the student select the item map in subsection 1?
21. Continuation of instruction on item 1

Student-Control of Course Content

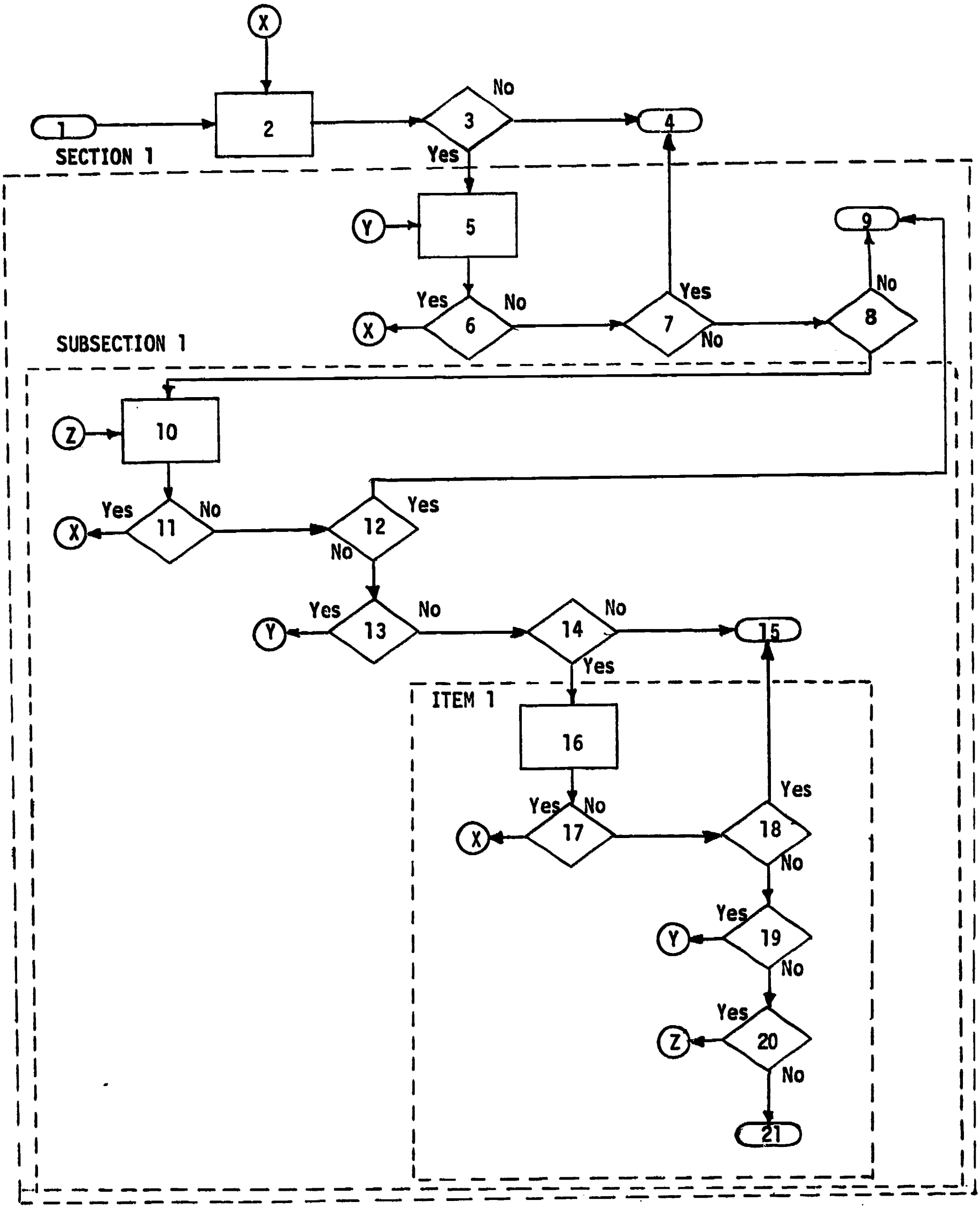

Student Choice to Receive Explanation of Quiz Questions and/or Review[5]

Student receives introduction, then instruction; he then has a choice of reviewing the instruction, stopping until a later time, or continuing with more instruction followed by a two-part quiz. At the end of part 1 of the quiz the student has the option of receiving an explanation of any or all of the questions. After receiving the explanations or deciding not to receive them, he proceeds to the second part of the quiz. His score is given at the end of the entire quiz. He then has the option of going on to the next chapter, repeating this chapter, or stopping.

Key to Flowchart
Student Choice to Receive Explanation of Quiz Questions and/or Review

1. Start
2. Introduction to the course segment
3. Beginning of instruction
4. Student is given option to receive either a review of previous instruction, or instruction on new material
5. Review of previous instruction
6. Instruction presented on new material
7. Part 1 of quiz
8. "Do you want an explanation of question 1 in part 1 or quiz, or all questions explained?
9. Explanation of question n
10. Has option for all questions been given?
11. Do you want an explanation of next question?
12. Explanation of each question in Part 1 of quiz
13. Part 2 of quiz
14. Feedback is given: "Your score for Part 1 and 2 of quiz is _____."
15. Student is given option to proceed to the next section; repeat this section; or stop
16. Next section
17. Stop

---

[5]From Penn State's course segment Management Accounting, Project No. 5-1194, IBM 7010 or 1410; authors: Joe J. Cramer and Carl R. Palmer.

Student Choice to Receive Explanation of Quiz Questions and/or Review

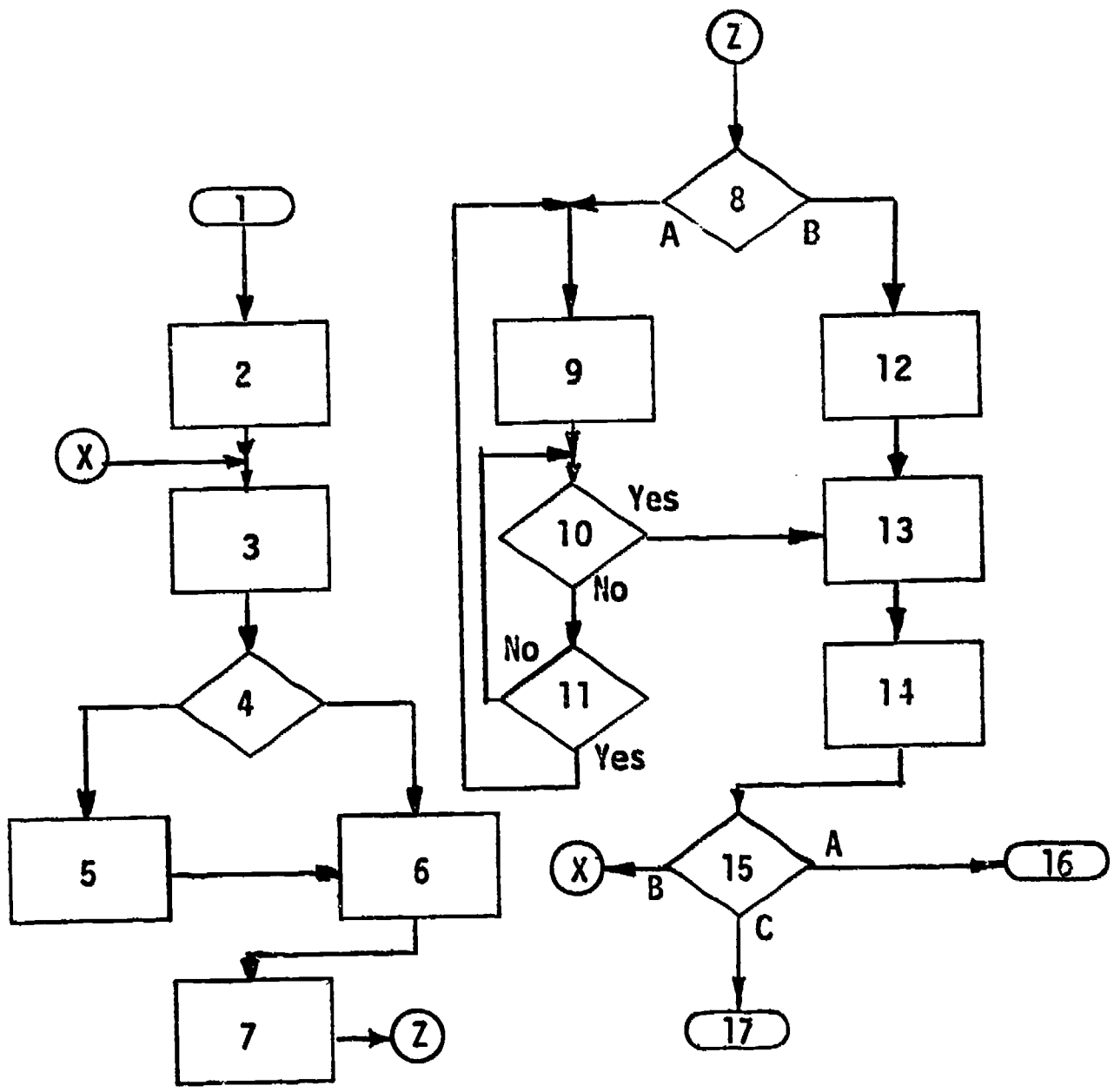

Student-Adapted Multi-Level Instruction

A course can be comprised of several independent blocks of instruction. Strategy may allow the student to select the order he will enter the blocks of instruction. When a block is entered, the student first receives a diagnostic test on the content of the block; if performance is satisfactory, the block is exited; otherwise, the student will receive instruction followed by a criterion test. If criterion is not met on the test, the instruction is presented again. When criterion is met, the student can choose his next block of instruction. Within each block, the student may elect to enter review and request help routines.

An example of a course using the strategy explained above is a preliminary version of "The Laboratory Diagnosis of Malaria," developed by the staff of the United States Navy Medical School and the CAI Laboratory of The Pennsylvania State University.

Key to Flowchart - Student-Adapted Multi-Level Instruction[6]

1. Sign on
2. Introduction to course: list of topic areas
3. Has student completed smear technique?
4. Did student elect to enter smear technique?
5. Diagnostic test: smear technique
6. Was student performance satisfactory?
7. Instruction: smear technique
8. Does the student wish to review?
9. Review: blood smear technique
10. Criterion test: smear technique
11. Is remedial work required?
12. Remedial: smear technique
13. Has criterion been reached?
14. Has student completed stage instruction?
15. Did student elect to enter stage instruction?
16. Diagnostic test: stage instruction
17. Was student performance satisfactory?
18. Instruction: stage discrimination
19. Does the student wish to review?
20. Review: stage discrimination
21. Stage drill
22. Has student requested assistance?
23. Assistance: stage drill
24. Has student completed the drill?
25. Criterion test: stage discrimination
26. Has student completed species diagnosis?
27. Does student wish to enter species diagnosis?
28. Diagnostic test: species diagnosis
29. Was student performance satisfactory?
30. Instruction: diagnostic properties
31. Is further instruction required?
32. Instruction: artifact discrimination
33. Is further instruction required?
34. Does the student wish to review?
35. Review: species diagnosis
36. Species drill
37. Criterion test: species diagnosis
38. Has student completed all sections?
39. Off-line microscope test
40. Is remedial work required?
41. Remedial: species diagnosis
42. Sign off

---

[6]From Penn State's course segment Laboratory Diagnosis of Malaria, Office of Naval Research, Contract No. N00014-67-A-0385-0003, IBM 7010 or 1410; authors: CDR M. Stirewalt Lincicome, MSC, USN; Richard Beaudoin; HMC Dean Armstrong, USN (Ret.); HM1 Arthur Wentland, USN; Leslye Bloom.

FLOW CHART FOR THE LABORATORY DIAGNOSIS OF MALARIA

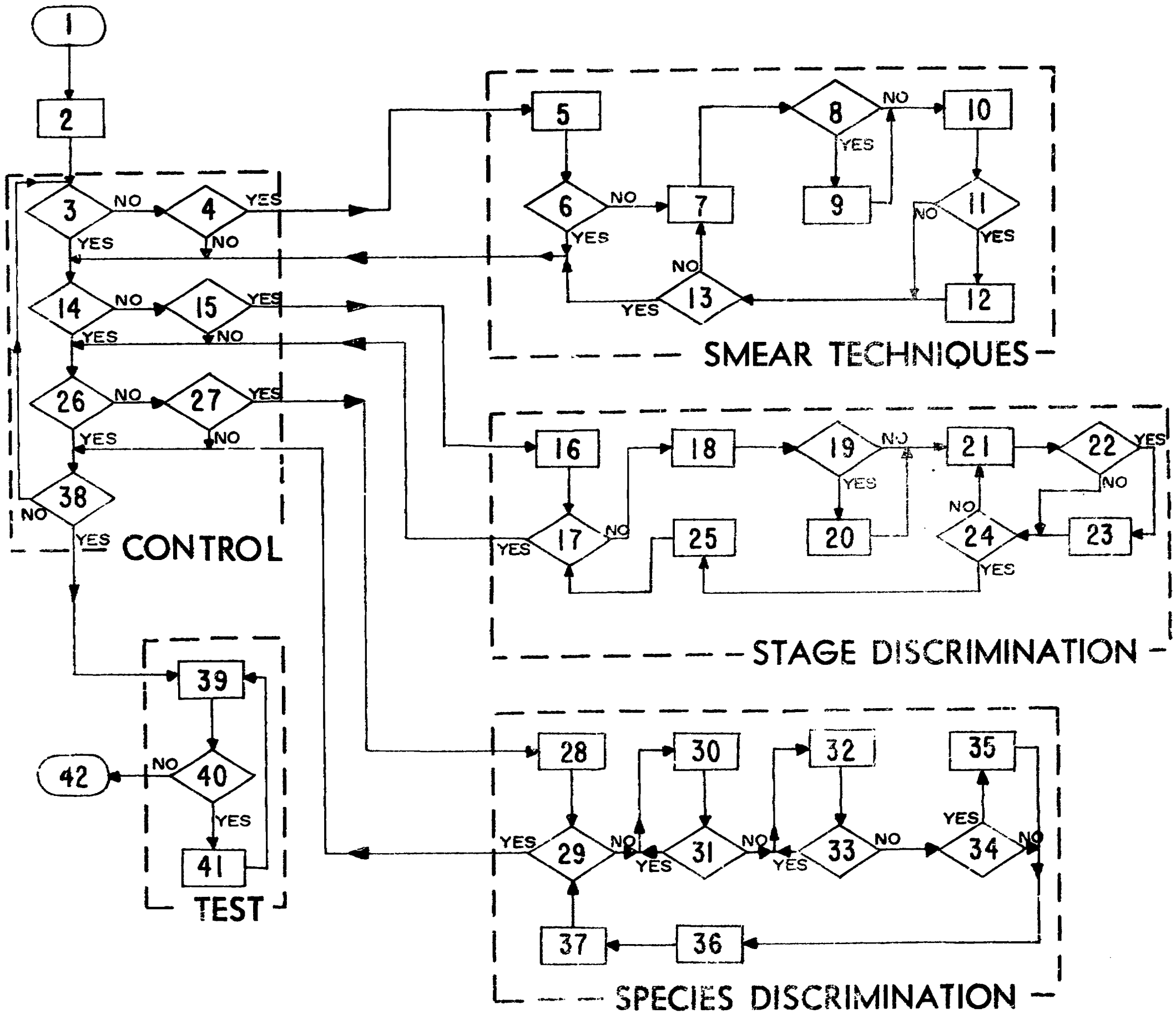

CHAPTER VI

SECTION FLOWCHARTS

The strategies presented in this chapter represent sections of a course. Many include programing over several questions or frames, such as those giving cumulative feedback relative to a set of questions.

Giving Cumulative Feedback

One of the primary advantages of computer-assisted instruction is the facility each student is given by providing feedback concerning his progress during the course. Information may be accumulated for a given number of problems, or for a specific length of time and then the results given to the student and/or the proctor. Based on the results of the student's performance in a section of the course, problems could be assigned for additional instruction or drill.

See the sample flowchart, "Recording Questions Answered Correctly," in Chapter IV for an additional flowchart which uses cumulative information.

Indicating Response Latency to Student

The author wants to accumulate the student's response latency (time from when student may respond until he enters his response) and inform him as to how many seconds it has taken him to answer the question. Each time the student answers the question, his response latency, in seconds, is added to a counter. His answer is then processed, and he is told whether he is right or wrong and how many seconds he has spent on the question.

An instruction that will update the student's restart record is used before and after the counter used to record total response latency is loaded with zero so that if the student signs off before he has completed the question correctly, the counter will not be set to zero when he signs off again.

Key to Flowchart - Indicating Response Latency to Student[7]

1. Start
2. Initialize to zero counter used to accumulate response latency (counter n)
3. Update restart record so that if student signs off before the problem is completed correctly, this will be the restart point
4. Show the proper image on the image projector
5. Display the statement: Examine the image. What is the atomic number of sodium?
6. Student may respond to the question
7. Add response latency to counter n
8. Is answer correct? If so, go to 9, if not, go to 10
9. Display contents of counter n within the statement: It took you ___ seconds to answer the question correctly
10. Display counter n within the statements: Wrong. You have now spent ____ seconds trying to answer this question
11. Next problem

[7]From Penn State's course segment Atomic Energy, Project No. 5-85-074, IBM 7010 or 1410; author: David A. Gilman.

Indicating Response Latency to Student

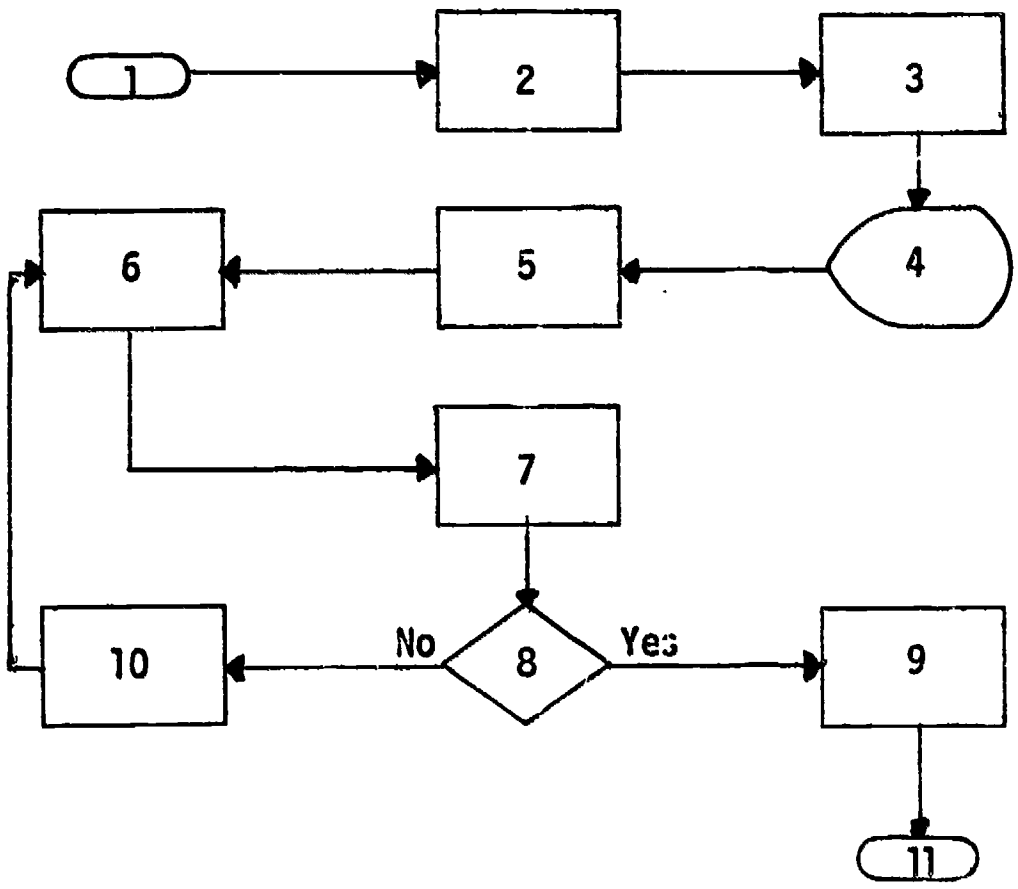

Testing Student and Giving Feedback to Student and Proctor

This routine is designed for a test situation. The test is written in a manner that will present ten problems one at a time with the answers and problems remaining visible. When the student completes the last problem, the program analyzes all ten answers and indicates to the student whether or not each answer is correct. The program also provides the proctor with the following information:

1. number of problems
2. the number correct
3. specific problems correct

Key to Flowchart - Testing Student and Giving Feedback to Student and Proctor

1. Start
2. Display example problem on the image projector
3. Display one problem and allow student to respond
4. Is student's response correct? If so, go to 6; otherwise go to 5
5. Load 0 into appropriate switch
6. Load 1 into appropriate switch
7. Move the problem label (A, B, etc.) into a buffer area for later use to display to proctor which problems were correct
8. Add 1 to total-correct counter
9. Are all the test problems displayed? If not go to 3; otherwise go to 10
10. Test the switch recording correctness of each problem. If equal to zero, go to 11; otherwise go to 12
11. Indicate a wrong answer by placing the letter 'w' beside the appropriate problem label and go to 13
12. Indicate a correct answer by placing the letter 'r' beside the appropriate problem label and go to 13
13. Have all switches been tested? If so, go to 14; otherwise go to 10
14. Send proctor message; that is, display contents of appropriate buffers, counters, and switches at proctor station
15. End of test

Testing Student and Giving
Feedback to Student and Proctor

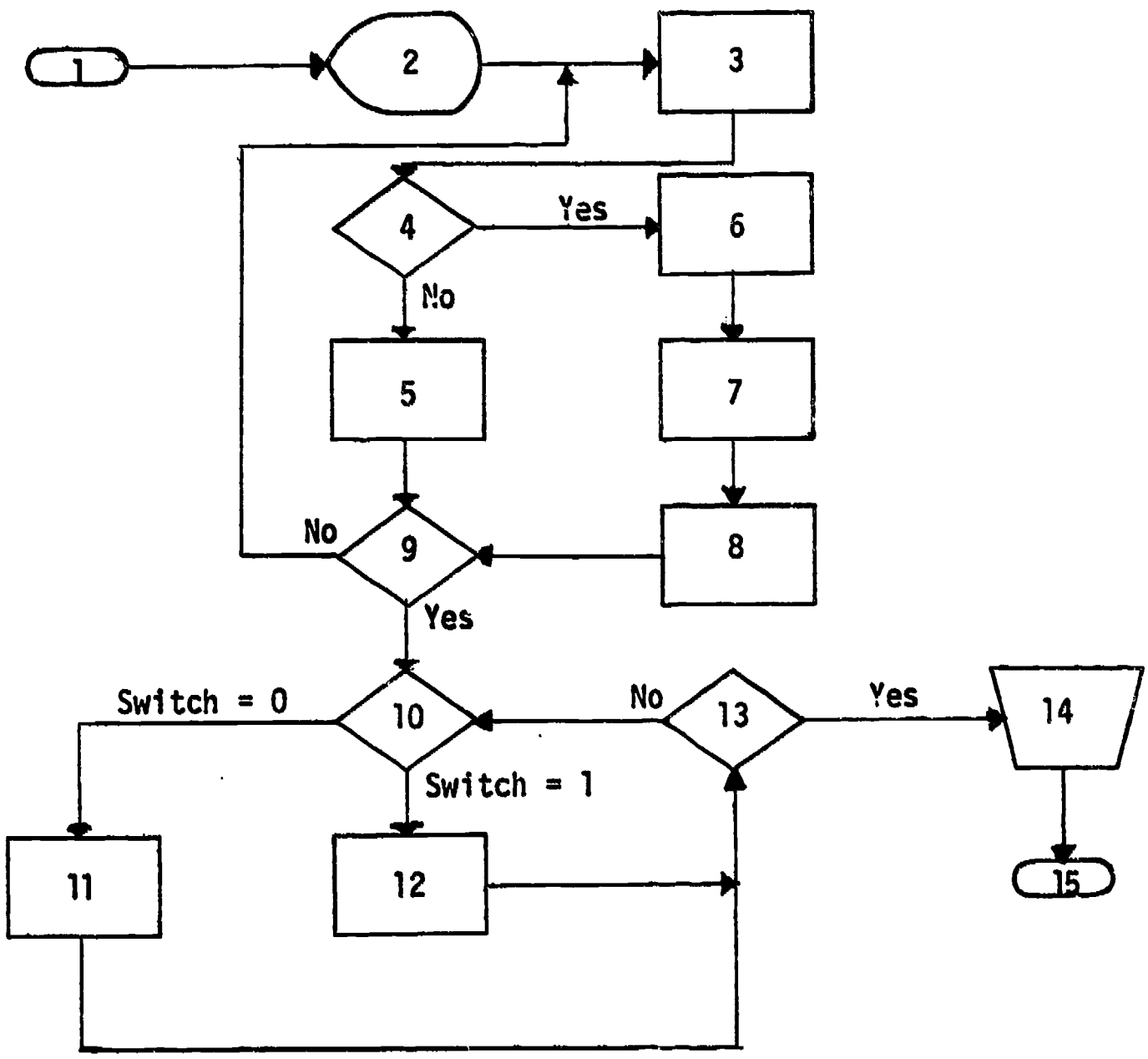

Giving Information to Proctor when
Student Completes an Instructional Session

At the time the student has completed an instructional session, it is desirable to have information on his recent performance. Items of particular importance are 1) where in the course is the student; 2) how many questions has he answered in this session; 3) how many questions were answered correctly on the first attempt; 4) how many times did the student "time-out"; and 5) how many minutes was the student on the course.

To carry this out, at the time of sign-on for the instructional session, specific counters should be initialized to zero and the starting point in the course for the session should be recorded.

When the student indicates he is ready to sign off, either by a special code or by using a special sign-off routine, a message should be sent to a proctor station. This message should clearly identify the contents of counters and storage areas which were used to record the information during the session and, of necessity, should include the student's name.

Key to Flowchart

Giving Information to Proctor when Student Completes an Instructional Session[8]

1. Sign on
2. Initialization of counters to be used for recording of number of questions answered, number answered correctly on the first attempt, number of time-outs, etc.
3. Body of instruction which uses the specified counters to record information
4. Question is presented and student has chance to respond
5. Did student indicate that he wants to sign off instead of responding to question?
6. Sending of messages to proctor consisting of information on the student's performance during the recent session
7. End of session; when student signs on again he will be restarted at beginning of the section in which he signed off
8. Analysis of response and continuation of instruction

---

[8]From Penn State's course segments Algebra and General Math, U. S. Office of Education through the School District of Pittsburgh, prime contract Grant No. OEG-0-8-055230-3479, Project No. 5523, IBM 1500 system; authors: Carol Dwyer, Robert Igo, Terry Bahn, Diana Ryall.

Giving Information to Proctor when Student Completes an Instructional Session

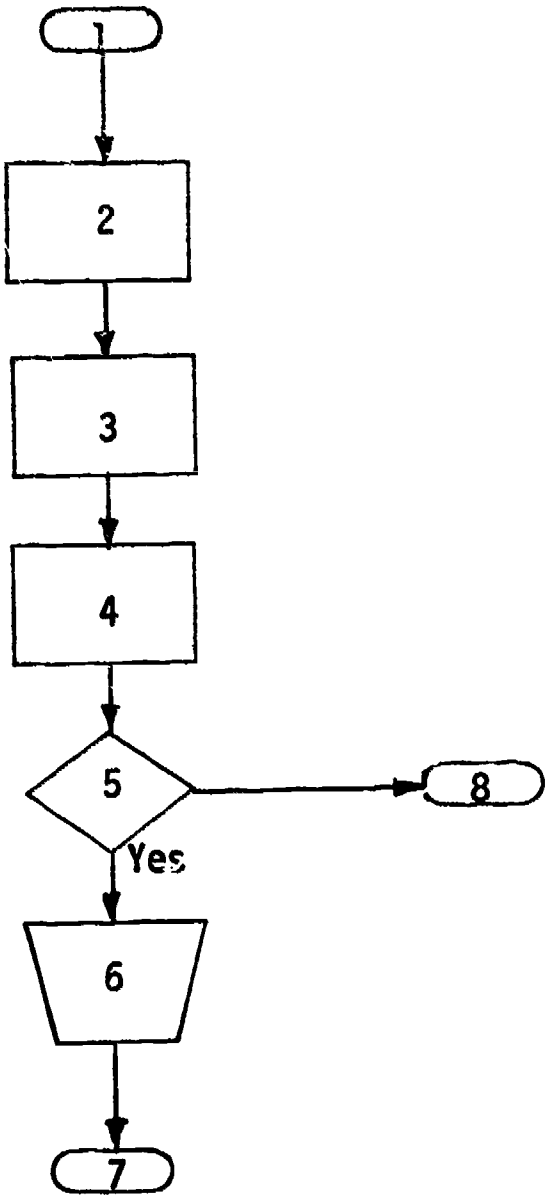

Flexible Course Flow

One of the difficulties with conventional classroom teaching is that the instruction cannot be made suitable for the wide range of capabilities and interests of the students. While one student has become bored with problems which are easy for him to solve, another is discouraged because he can not do the work. However, CAI courses can be programed to allow for individual differences and difficulties.

Student Control of Course Flow

In the initial development of a course the author cannot be certain that the selected content and organization of the course is the most efficient for achievement of the objectives of the course. Even after revisions are made on the basis of student performance and observations by the students, instructor, and others, a program which does not allow for individual differences may not achieve the objectives efficiently.

If while remaining in the basic framework planned by the author, the student can control course flow, performance of the student may be improved; and, in addition, when the instructor reviews the flow through the course selected by the student, he may receive clues as to where revisions are needed. Computer-assisted instruction can provide great opportunity for student-control of course flow. At each question, prior to answer analysis, tests may be made for a special code which, if typed by the student, indicates a request for one of the options available in the course that will alter course flow.

Possible options and their special code may be

1. Help from the proctor on duty (-h)
2. Review material (-r)
3. Summary information (-s)
4. To go back to the beginning of the current problem (-p)
5. To go back to the previous problem (-b)
6. To go back to the beginning of the lesson (-l)
7. To go on to the end of the current lesson (-e)
8. To go to the next problem (-n)

Key to Flowchart - Student Control of Course Flow

1. Start of lesson
2. Series of problems
3. Problem immediately preceding the current problem
4. Preliminary instructions for the current problem are presented
5. The problem is presented
6. Student may respond to the question
7. Was an unavailable option requested?
8. Message that the selected option is not available at this time
9. Was a request for help from the proctor made by the student? that is, did the student type "-h"?
10. Proctor message is sent to the proctor station and the student is told to wait for assistance
11. Did the student request a review of the lesson? that is, did the student type "-r"?
12. Review questions and discussion of the material covered thus far in the current lesson and pertinent information from previous lessons
13. Did the student request a summary of the current lesson? that is, did the student type "-s"?
14. Presentation of summary statements of information presented in the current lesson
15. Did the student request to go back to the beginning of the current problem? that is, did the student type "-p"?
16. Did the student request to go back to the previous problem? tThat is, did the student type "-b"?
17. Did the student request to go back to the beginning of the current lesson? that is, did the student type "-l"?
18. Did the student request to go to the end of the current lesson? that is, did the student type "-e"?
19. Did the student request to go tp the next problem in sequence? that is, did the student type "-n"?
20. Did the student type the correct answer to the question?
21. Feedback for correct response
22. Next problem in sequence
23. Additional answer analysis instructions
24. End of the current lesson

Student Control of Course Flow

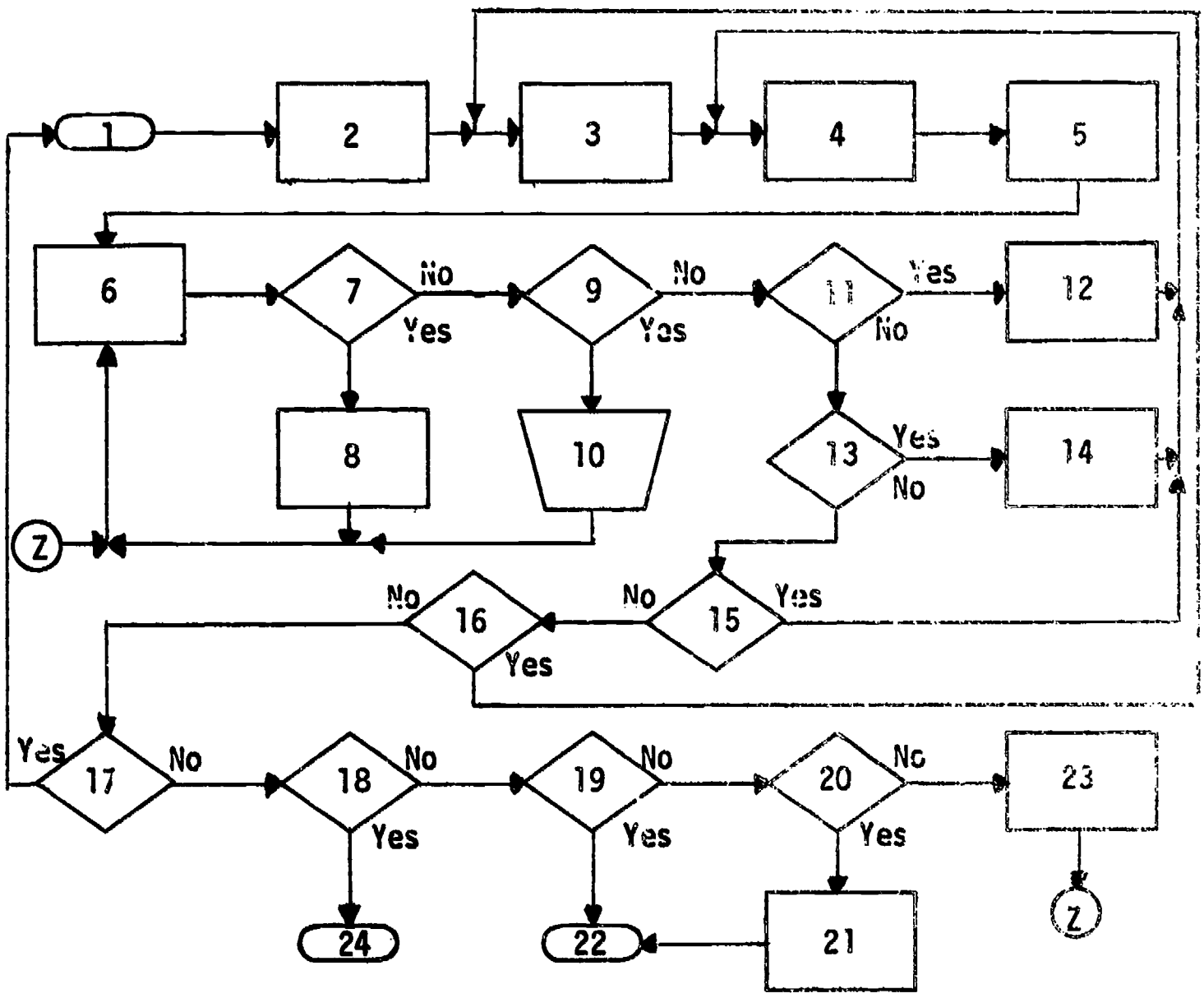

Sequence Based on Number of
Consecutive Problems which are Correct

A student who has mastered a concept will lose interest if he is required to answer question after question using this concept. In a set of practice exercises, flexibility can result by having many exercises available and branching out of the sequence of exercises if the student answers correctly a specific number of consecutive problems. Also, if all exercises are attempted and the consecutive-number criterion is not met, the type of remedial instruction can be based on the total percentage correct.

Key to Flowchart
Sequence Based on Number of Consecutive Problems which are Correct

1. Start
2. Initialize specific counters for scorekeeping and give instructions
3. Question is presented and student responds
4. Is the answer correct? If yes, go to 5; if not, go to 12
5. Give feedback that response is correct; add 1 to the total-correct counter; add 1 to the counter storing the number of consecutive correct problems
6. Has criterion of getting a certain number of consecutive problems correct been met? If yes, go to 7; otherwise, go to 8
7. Indicate that criterion has been met and go on to next section
8. Have all learning exercises been presented?
9. Did the student have 60% of all problems correct?
10. Present several practice problems with specific feedback when incorrect
11. Give intensive remedial instruction and practice exercises
12. Indicate to the student that response is incorrect and give specific feedback to assist the student in understanding how to correctly answer the problem
13. Initialize to zero the counter in which the number of consecutive correct problems is stored

Sequence Based on Number of
Consecutive Problems which are Correct

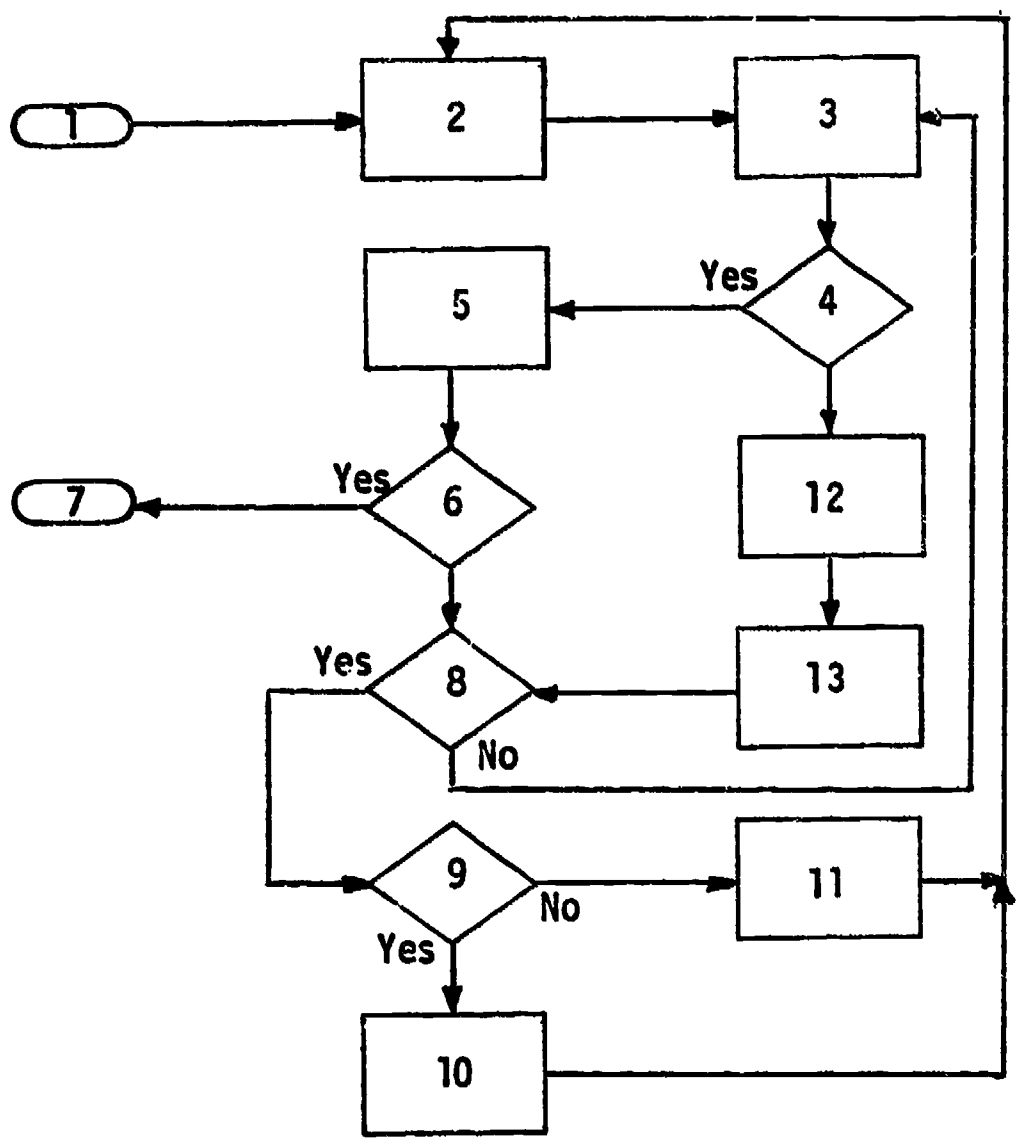

Allowing Student
to Change Responses

The student is given four problems to solve. He answers each one individually in order with his answer being placed next to the corresponding question. After the responses have been given, but before feedback as to correctness is made, the student is given the option to change any of his answers. After any desired changes are made, analysis is done and feedback is given on all problems.

Key to Flowchart - Allowing Student to Change Responses[9]

1. Four problems are presented
2. Student is allowed to respond to one of the questions; response is placed below the question
3. The response and whether it is correct is recorded
4. Have all questions been answered? If so, go to 5; if not go to 2
5. Student is asked whether or not he would like to change any answers; if so, go to 6, if not, go to 10
6. Student is given the opportunity to list the numbers of the problems he would like to change
7. Has the student been given the opportunity to change all problems that he wanted to change? If yes, go to 10; if no go to 8
8. Has student indicated that he would like to change problem n? If yes, go to 9; if no go to 7
9. Student responds again to problem n; his answer and whether or not it is correct is recorded in place of the former results
10. Student is told which answers are correct and which are incorrect
11. Next problem

[9]From Penn State's course segment Algebra, U. S. Office of Education through the School District of Pittsburgh, prime contract Grant No. OEG-0-8-055230-3479, Project No. 5523, IBM 1500 system; authors: Catherine Folger and John McNear.

Allowing Student to Change Responses

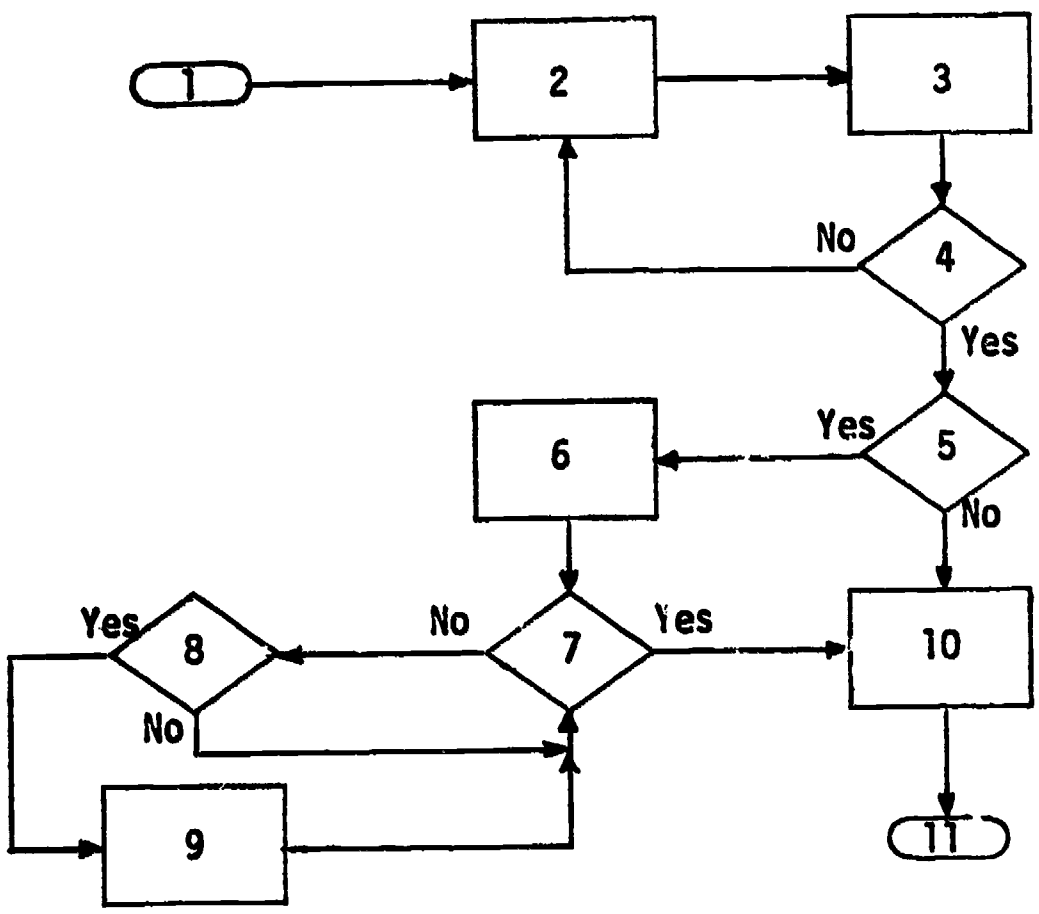

CHAPTER VII

QUESTION-LEVEL FLOWCHARTS

Question-level flowcharts involve the strategy required for a single question, problem, or frame. The strategies presented here are merely a representative sample of possible sequences at the question or frame level.

Individualization of Presentation

One criticism of computer-assisted instruction is that receiving instruction via a machine is too impersonal. However, there are means by which an author can decrease the feeling of the student that he is alone with a powerful mechanical device.

Introduction of New Concept

Assume that a new concept is to be introduced. Since the purpose of the question to be asked is to provide a provocative introduction or bridge to what comes next, the student's response should not be checked for correctness. However, when the student has completed his response, he is presented with some correct answers before continuing.

Flow proceeds directly in order:

1. Display question: What is a noun?
2. Student is allowed to respond
3. Feedback is presented to the student that begins, "You should have typed. . ."
4. The student indicates when he is ready to go on

Personalizing Course by Using Student's Name

It is possible to make the student feel that the course has been individualized by using his name in asking questions and in giving him feedback. This can be done easily by asking the student to type his first name at the beginning of the course or by retrieval of the student's name from his record.

Flow proceeds in order:

1. The student is asked a question
2. The student responds
3. Appropriate feedback and the student's name are displayed

Displaying Student's Response

It may be desirable to display the response made by the student. Any response the student makes is saved until the next response request. Therefore, all that is necessary is for the response to be displayed in an appropriate place.

Procedure could be:

Display the phrase, "You responded" followed by the student's response and the question, "Is this what you meant to say?"

Requests Made by Student

Students participating in computer-assisted instruction are usually accustomed to conventional classroom instruction in which many of their questions are answered and individual problems may be solved with a brief request. With CAI, students may have the option to request individual assistance from a teacher and also to make other requests.

Student May Request
Assistance from Proctor

Situations may arise in which the student reaches an impasse in the course. One way this could happen is within a question frame that required the student to give a correct answer before he goes on to the next frame, but the student cannot determine the correct answer from the hints given. The student cannot go on without help, and if the help required is not programed into the course he can enter a request for help from the proctor who could then give him individual assistance.

Key to Flowchart - Student May Request Assistance From the Proctor

The student may be given the option to interrupt the flow of the course at any time to request assistance. The dotted lines indicate student-initiated flow.

1. Start of problem
2. Question is presented
3. Student is given opportunity to respond
4. Was answer correct?
5. Appropriate feedback is given and student goes to next problem
6. Was this the first incorrect response?
7. First hint
8. Was this the second incorrect response?
9. Second hint
10. Third hint, which is given on all subsequent responses
11. Proctor message is sent by the student that he needs help; assistance is given by the proctor either on or off line; when the student is ready to continue, the computer automatically branches to the beginning of the current problem

Student May Request Assistance
From the Proctor

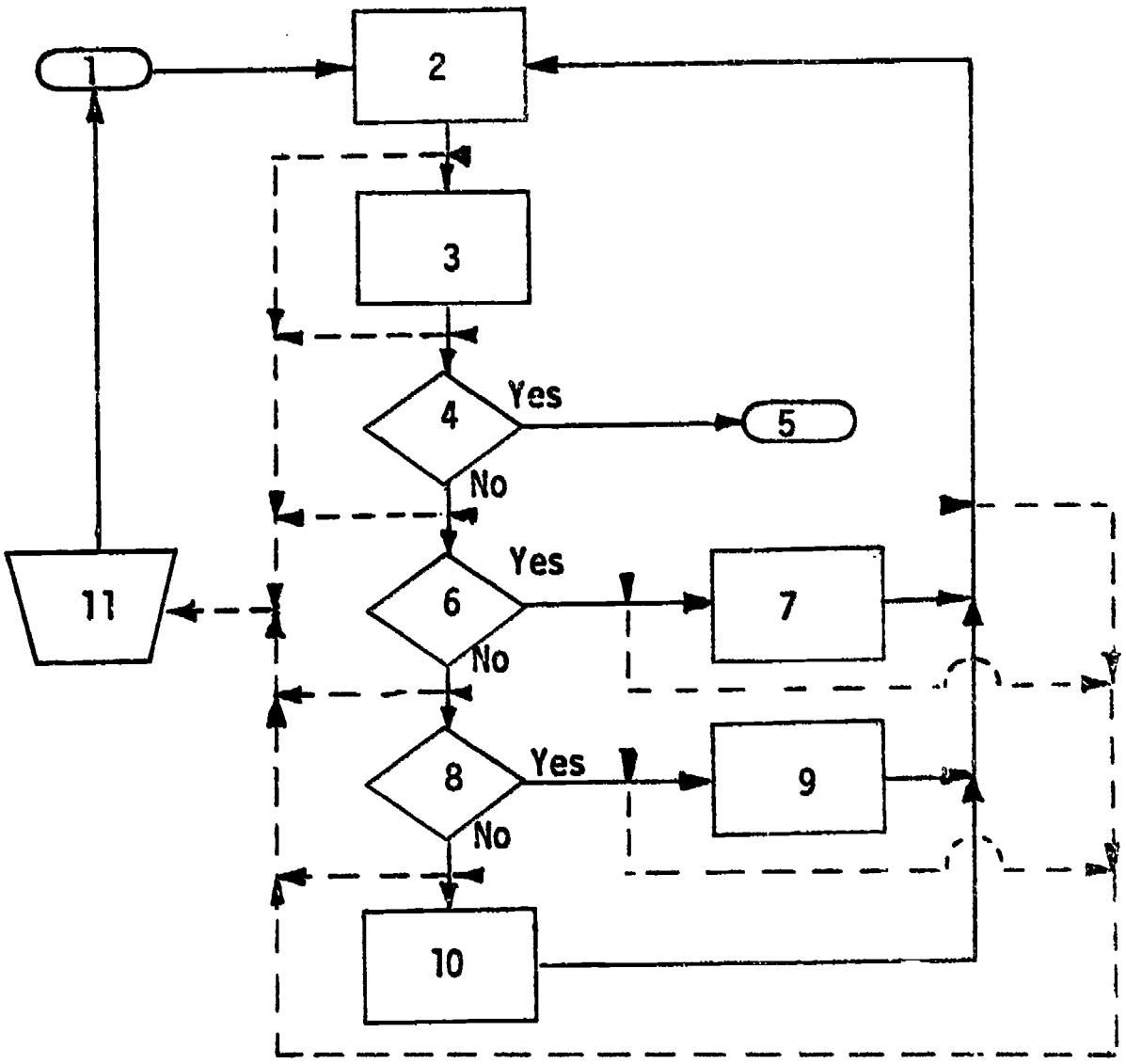

Note: Dotted lines indicate points where assistance may be requested.

Student May Request Correct Answer

The author allows the student to request the correct answer to a question by entering the word "go." Once he has been given the correct answer, he must type it before he can proceed to the next material. If the response "go" is not found, the student's response is compared in the usual manner with anticipated correct and incorrect answers, and feedback is given.

Key to Flowchart - Student May Request Correct Answer[10]

1. Entry to problem
2. Problem is presented
3. Question is asked
4. Is response "go?"
5. Correct response is given and student is told to type response
6. Additional response analysis takes place
7. Continuation of course

[10] From Penn State's course segment Atomic Energy, Project No. 5-85-074, IBM 7010 or 1410; author: David Gilman.

Student May Request Correct Answer

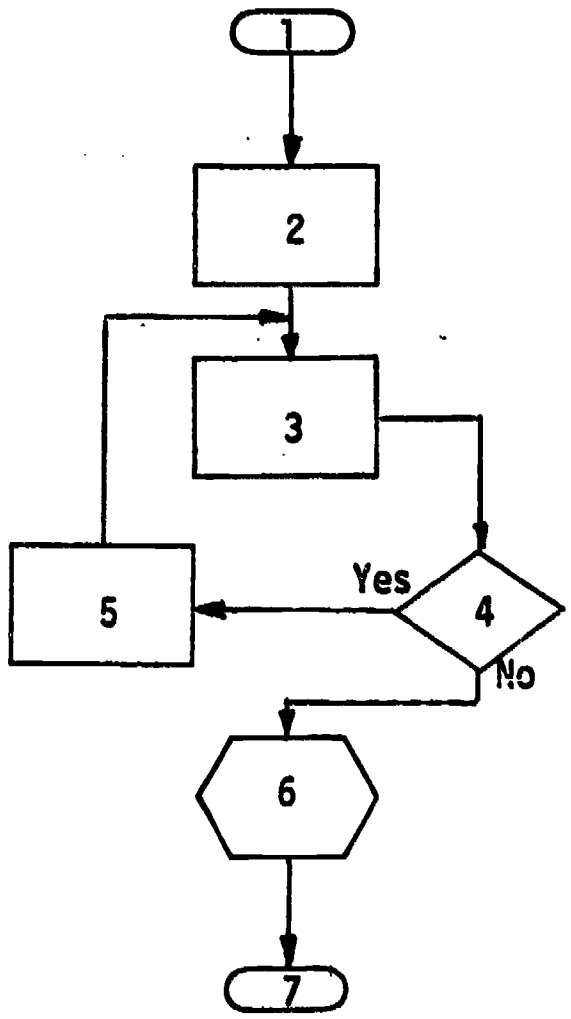

Student May Indicate Need for Review

The student may be told before beginning a series of questions that if he feels a need for a review, such a request may be made by typing the word "review" at the time of a response request instead of entering a response. One of the anticipated responses for each question would be "review" which, if matched, would be followed by a branch to an appropriate review sequence.

Key to Flowchart - Student May Indicate Need for Review

1. Question is presented
2. Student responds to question
3. Did the student match the correct answer?
4. Did the student match a specific wrong answer?
5. Specific feedback is given
6. Did the student type the word "review"?
7. Review
8. Feedback given for an unrecognized response
9. Feedback for correct response
10. Next problem

Student May Indicate Need for Review

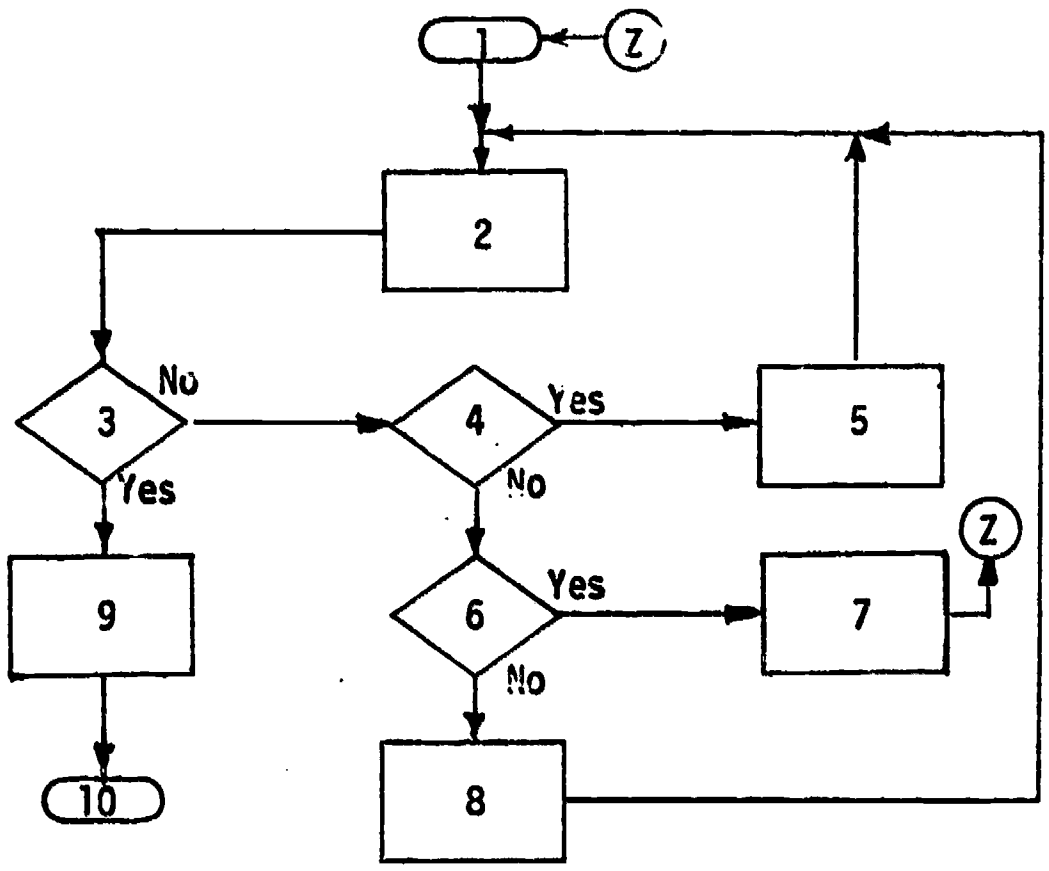

Flexible Feedback

Since computers have the capability to use information about the student, varied feedback can be stored in the program, and its use can depend on the student's personality, background, or performance.

Feedback Adjusted to Student

Students with many personalities and past achievement and differing in sensitivity and temperament take courses presented by computer-assisted instruction. In a course with one path that all students follow, it is possible to make feedback appropriate to the student. Several types of feedback may be available throughout all of the course or within specific sections such as a review prior to a quiz. As examples, here are three types:

1. For the "well-adjusted high-achiever," feedback would be short and to the point and could include some information about the gap between the student's ability and his performance.
2. The "non-extreme personality and/or average-achiever" would receive the common type feedback.
3. For the "unconfident low-achiever," feedback would be encouraging and extensive.

Judgments as to which type of feedback the individual student should receive could be made in several ways:

1. A subjective decision by an instructor familiar with the student's background could be made prior to the student's beginning the course; this would be stored in the computer area to be used during the course.
2. An off-line personality inventory could be administered and based on this analysis, the specific storage area indicating the feedback type can be initialized after sign-on.
3. At the beginning of the course, pertinent questions could be asked to determine the most desirable type of feedback.
4. At various points in the course, inconspicuous questions determining attitude may be included, and the type of feedback could be adjusted
5. The student's performance during a small unit of the course or all of the course to the present may be used as the criterion in determining which type of feedback the student should receive.

When the decision relative to the type of feedback applicable is made, a counter can be loaded with one, two, or three corresponding to the type of feedback. This counter can be checked at the appropriate points in the course to determine which of the three available feedbacks is to be used.

Key to Flowchart - Feedback Adjusted to Student

1. Start
2. Setting of counter n to one, two, or three corresponding to feedback type on the basis of some judgment as to the student's personality or achievement
3. Presentation of a question; student responds
4. Was response correct?
5. Should feedback 1, telling the student he is correct, be given; that is, is counter n equal to one?
6. Feedback 1, telling the student he is correct, is given
7. Should feedback 2, telling the student he is correct, be given; that is, is counter n equal to two?
8. Feedback 2, telling the student he is correct, is given
9. Feedback 3, telling the student he is correct, is given
10. Should feedback 1, telling the student he is incorrect, be given; that is, is counter n equal to one?
11. Feedback 1, telling the student he is incorrect, is given
12. Should feedback 2, telling the student he is incorrect, be given?
13. Feedback 2, telling the student he is incorrect, is given
14. Feedback 3, telling the student he is incorrect, is given
15. Next problem in sequence

Feedback Adjusted to Student

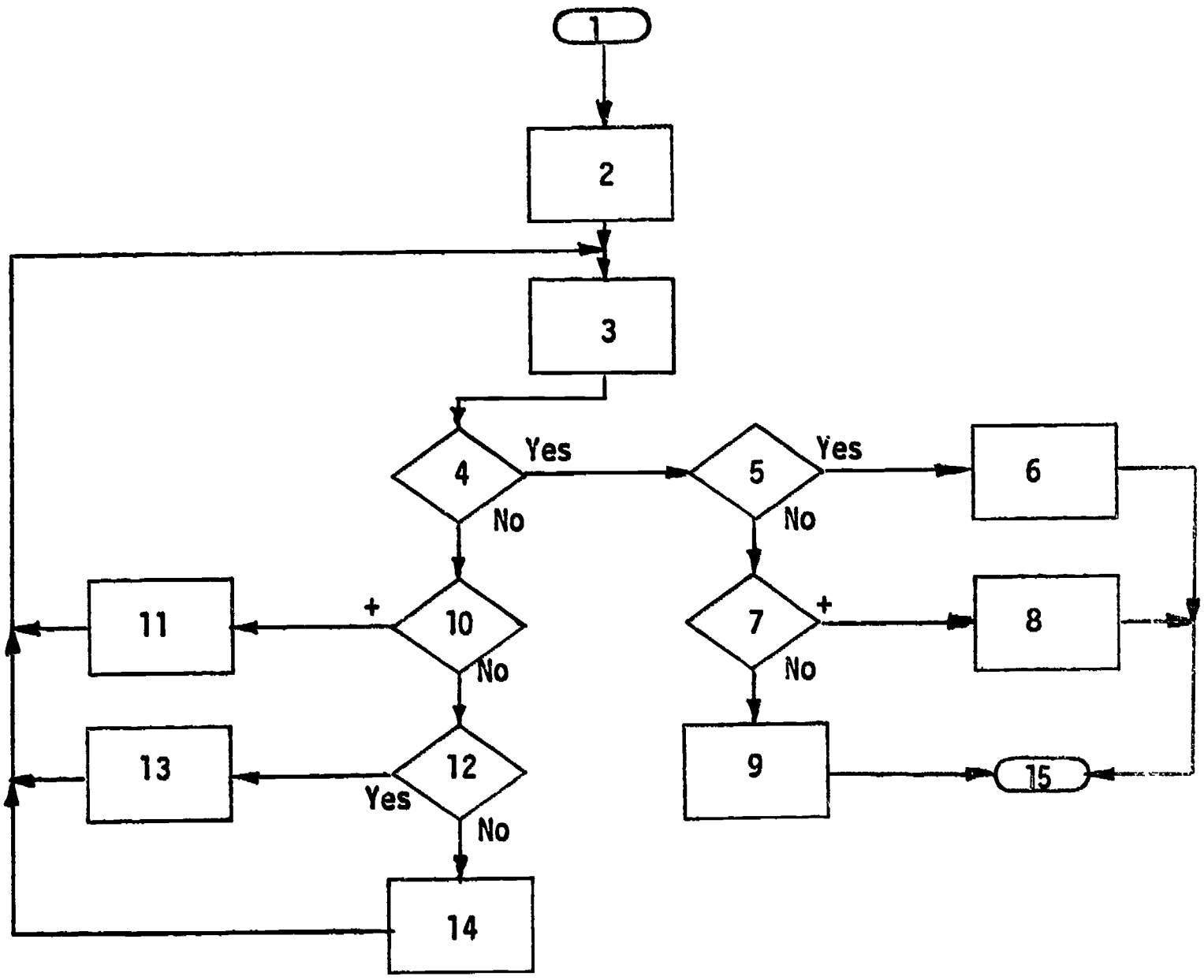

Varying Feedback for Each Response Attempt

Common programing usually provides varying feedback for several anticipated responses. However, many programers do not provide different feedback, for example, if the correct answer is given on the second, third, or fourth attempt as opposed to the first attempt. Feedback of "excellent" on the fourth response to a basic question may make a student lose confidence in the course program. If desirable, it is within the capabilities of CAI to program varying feedback to be used for different response attempts. In the example included here, the flow for a match of the correct answer is shown. The same logic could be followed for each anticipated incorrect response.

Key to Flowchart - Varying Feedback for Each Response Attempt

1. Start and initialization of the counter used to record number of response attempts to this problem (counter n)
2. Question is presented and student responds
3. Counter n is incremented by one
4. Did student give the correct answer?
5. Additional answer analysis instructions and appropriate feedback
6. Does counter n contain 1?
7. Feedback 1, for response correct on first attempt, is given
8. Does counter n contain 2?
9. Feedback 2, for response correct on second attempt, is given
10. Does counter n contain 3?
11. Feedback 3, for response correct on third attempt, is given
12. Feedback 4, for response correct on fourth or later attempts, is given
13. Next problem

Varying Feedback for
Each Response Attempt

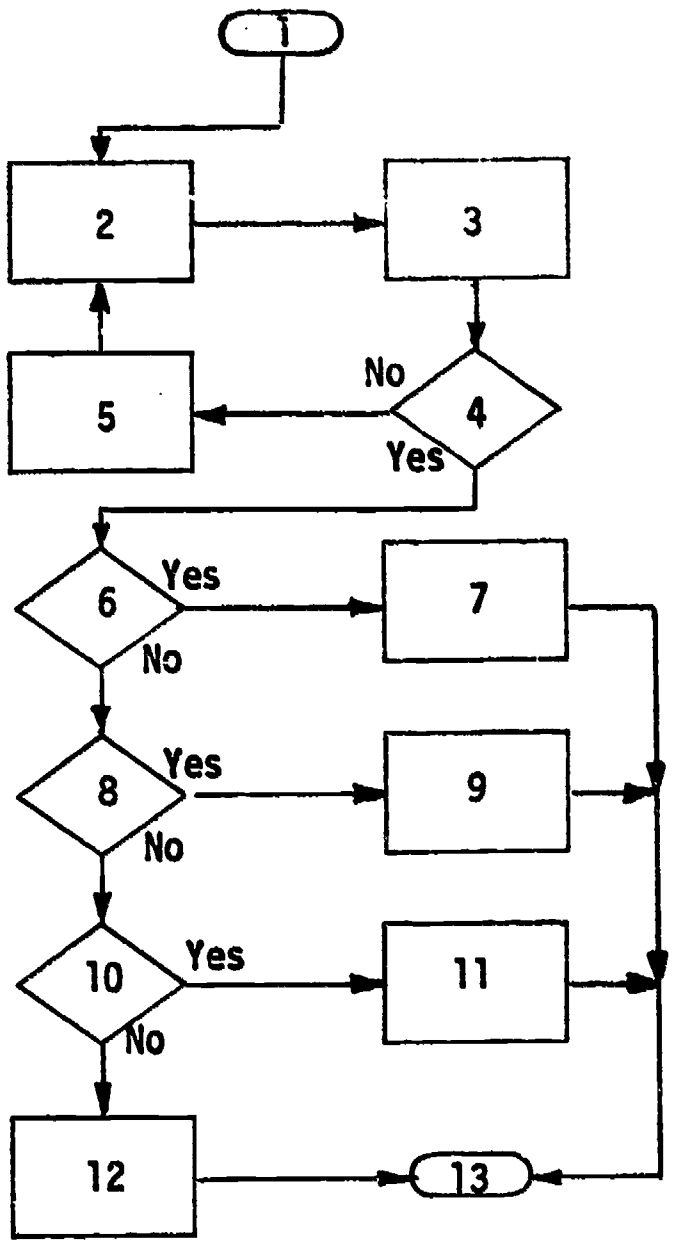

Multiple-Level Question

"Behind the scenes" in a question from the main flow of a course, there may be a great deal of course material which is not presented to the student who quickly comprehends the objective of the particular lesson; this student answers the question correctly and immediately goes to the next problem in the main flow. However, as in this example, for each of the three incorrect choices in the multiple-choice question from the main flow, different feedback is given and a thought-provoking question is asked. Then, depending upon the response to this question, a review may be given, an additional question may be presented, or some resulting conclusion is stated followed by transfer back to the original main flow question. If the student answers the main flow question incorrectly on his second attempt, he is given a review.

The main flow question used in this flowchart appeared in a programed textbook by Heimer and others (1963).

At any time during the multiple-level question, if the student does not select from the stated choices, he is branched to a special routine to inform him of this condition and is given a chance to respond to the question again. Also, after each special review, a branch is made back to the original question.

Key to Flowchart - Multiple-Level Question[11]

1. Display question:

   When we write $\sqrt{x-2}$, it is understood that $x-2$ ___ 0.

   a. $\geq$ b. $\geq$ c. = d. $\leq$

2. Did student select b? If so, go to 3; otherwise, go to 5
3. Give feedback: You are correct
4. Next problem
5. Has student answered the question from the main flow (item 1) incorrectly twice? if so, go to 6; otherwise go to 8
6. Give feedback that student has answered incorrectly once again and branch to a special review
7. Special review on why $\sqrt{x-2}$ implies that $x-2 \geq 0$
8. Did student select a? if so, go to 9; otherwise, go to 10
9. Give feedback: Your answer is partially correct. $x-2$ is defined when $x-2 > 0$. Is $\sqrt{x-2}$ defined when $x-2 = 0$? (Answer yes or no.) Go to 27
10. Did student select c? if so, go to 11; otherwise, go to 12
11. Give feedback: Your answer is partially correct. $\sqrt{x-2}$ is defined when $\sqrt{x-2} = 0$. Is $\sqrt{x-2}$ defined when $x-2 > 0$? (Answer yes or no.) Go to 33.
12. Since the student gave d as his choice, he is asked: Is $\sqrt{x-2}$ defined when $x-2 = 0$? (Answer yes or no.)
13. Did student answer yes? if so, go to 14; otherwise, go to 15
14. Feedback that student is correct is given. Go to 16
15. Has student answered the question in item 12 incorrectly twice? if so, go to 7; otherwise, go to 29
16. Student is asked: Is $\sqrt{x-2}$ defined when $x-2 > 0$? (Answer yes or no.)
17. Did student answer yes? if so, go to 18; otherwise, go to 19
18. Feedback is given that student is correct. Go to 25
19. Has student had a prior opportunity to answer the question in item 16? if so, go to 20; otherwise, go to 21
20. Special review on why $\sqrt{y}$ is defined when $y > 0$
21. Student is told that he is incorrect and is given the additional feedback:

    Recall that when we write $\sqrt{y}$, it is understood that $y \geq 0$. If $y = x-2$, then by our agreement, if we write $\sqrt{x-2}$, then $x-2 = 0$ or $x-2$ __ 0.

    a. < b. = c. > d. none of these

22. Did the student answer c? if so, go to 23; otherwise, go to 26

23. Feedback is given: Correct. $\sqrt{x-2}$ is defined for $x-2 > 0$. Go to 24

24. Did student come to the question in item 21 fro . a wrong answer to item 16? if so, go to 16; otherwise, go to 25

25. Additional feedback is given: Thus, $\sqrt{x-2}$ is defined when $x-2$ is non-negative. Now try again to answer the original question (item 1)

26. Feedback is given: No. The correct answer is > . If we write $r \geq s$, we mean $r > s$ or $r = s$. Go to 24

27. Did student select yes? If so, go to 28; otherwise, go to 29

28. Feedback, "Right," is displayed. Go to 25

29. Feedback is displayed: Incorrect. Recall that when we write $\sqrt{y}$, it is understood that $y \geq 0$. If $x-2 = 0$, then $x-2 = \sqrt{0}$ and $\sqrt{0}$ = ?

    a. 0 b. 1 c. 2 d. none of these

30. Did student answer a? if so, go to 31; otherwise, go to 35

31. Feedback is given: Correct. Thus, $\sqrt{x-2}$ is defined when $x-2$ is non-negative. Now try again to answer the question. Flow goes to item 32

32. Did the student come to this question after answering the original question with the incorrect choice d? if so, go to 12; otherwise, go to 1

33. Did student answer yes? if so, go to 34; otherwise, go to 21

34. Feedback is given that student's response is correct. Go to 25

35. Feedback is given: No. $\sqrt{0} = 0$ so $\sqrt{x-2} = 0$. Thus, $\sqrt{x-2}$ is defined when $x-2 = 0$. Go to 32

---

[11] From Penn State's course segment Demonstration in Mathematics, for National Conference on Computer-Assisted Instruction, The Pennsylvania State University, University Park, Pa., September 24-26, 1968; IBM 1500; authors: Ralph Heimer, Paul Klein, Robert Hostetler, Carol Dwyer.

Multiple Level Question

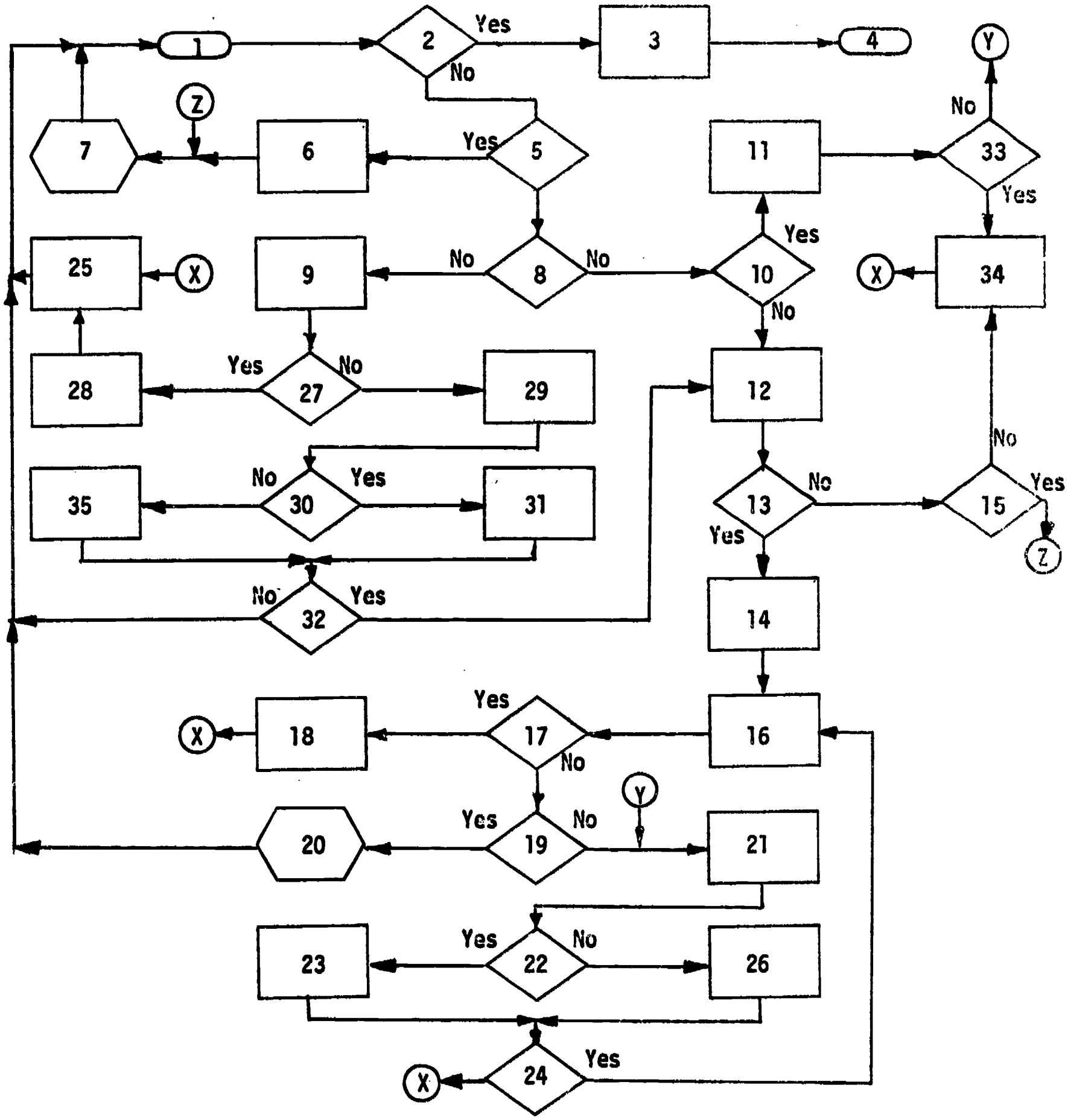

Editing Student's Response

It would be unreasonable to assume that each student will type the correct answer in one definite sequence of characters. Since the computer records by characters, it may be necessary, in order to eliminate a possible source of confusion, to delete irrelevant characters from a student's response prior to analyzing whether it is correct. Several examples of what can be done in computer-assisted instruction are as follows:

1. replace commas and periods with a space or delete specific punctuation marks
2. compress all spaces from the student's response
3. compress multiple spaces into one space
4. replace capital letters with lower case
5. replace an l (el) with a 1 (one)

In addition, words can be replaced with synonyms.

Downshifting Response Characters and Replacing Words with Numbers

The author specifies that the quantities 12 and 3 appear in the student's answer in that order for the answer to be accepted as correct, but he wishes to allow the student to input these quantities as words, with or without capital letters, or as numerals. He accomplishes this by editing the response in a manner to delete any shift characters from the student's response and to replace "twelve" with "12" and "three" with "3," and then testing the student's answer for the presence of 12 and 3 in order.

Key to Flowchart

Downshifting Response Characters and Replacing Words with Numbers

1. Start
2. Display question: In our system of measurement, we use the foot and the yard. There are _____ inches in 1 foot and _____ feet in 1 yard
3. Student responds to question
4. Response is edited with functions. That is, upper case letters are replaced with lower case; "12" replaces "twelve;" "3" replaces "three"
5. The integer which appears first in the response is placed in counter a; the integer which appears second is placed in counter b
6. Does counter a contain 12? if yes, go to 7; if no, go to 9
7. Does counter b contain 3? if yes, go to 8; if no, go to 9
8. Feedback that answer is correct
9. Feedback given because of incorrect answer: There are 12 inches in 1 foot and 3 feet in one yard
10. Next problem

Downshifting Response Characters and Replacing Words with Numbers

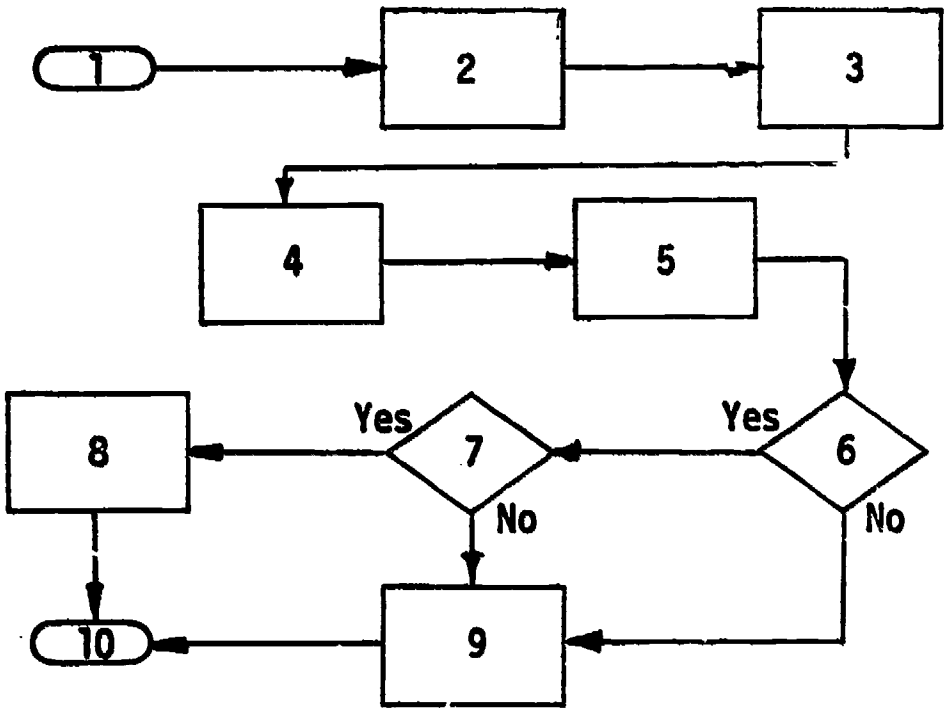

Replacing Words in Student's Response with Synonym

Often a word in a student's response is acceptable as correct even though misspelled. The example which follows illustrates one way that the student's response may be edited so that a specific word in his response is changed to the most acceptable version of the word (antihelix), and then his response is tested for the presence of three words (lower, crus, antihelix) in order as separate words.

Key to Flowchart - Replacing Words in Student's Response with Synonym[12]

In this example, the student is asked to identify a portion of the pinna marked on a plaster model of the human ear.

1. Start
2. Question is presented: "What is the name of part C?" Student is given opportunity to respond
3. Editing is done to change a word in the student's response to the most acceptable version, i.e, anthelix, anti helix, anti-helix, anti -helix, anti- helix, and anti - helix are edited to antihelix
4. The correct response, lower crus antihelix, is compared with the student's response. A test is made to determine whether three words in the student's response were correct. Were three words correct?
5. Feedback for correct response is displayed: Your answer is correct
6. Next problem
7. A test is made to determine whether one or more words in the student's response were correct. Were one or more words correct?
8. Feedback for partially correct response is displayed: Your answer is partially correct. Try again
9. Feedback for totally unrecognizable response is given: Your answer is incorrect. Find the correct answer on your handout and type it

[12] From Penn State's course segment Audiology, Project No. 5-1194, IBM 7010 or 1410; authors: Bruce M. Siegenthaler and Jeffrey Katzer.

Replacing Words in Student's Response with Synonym

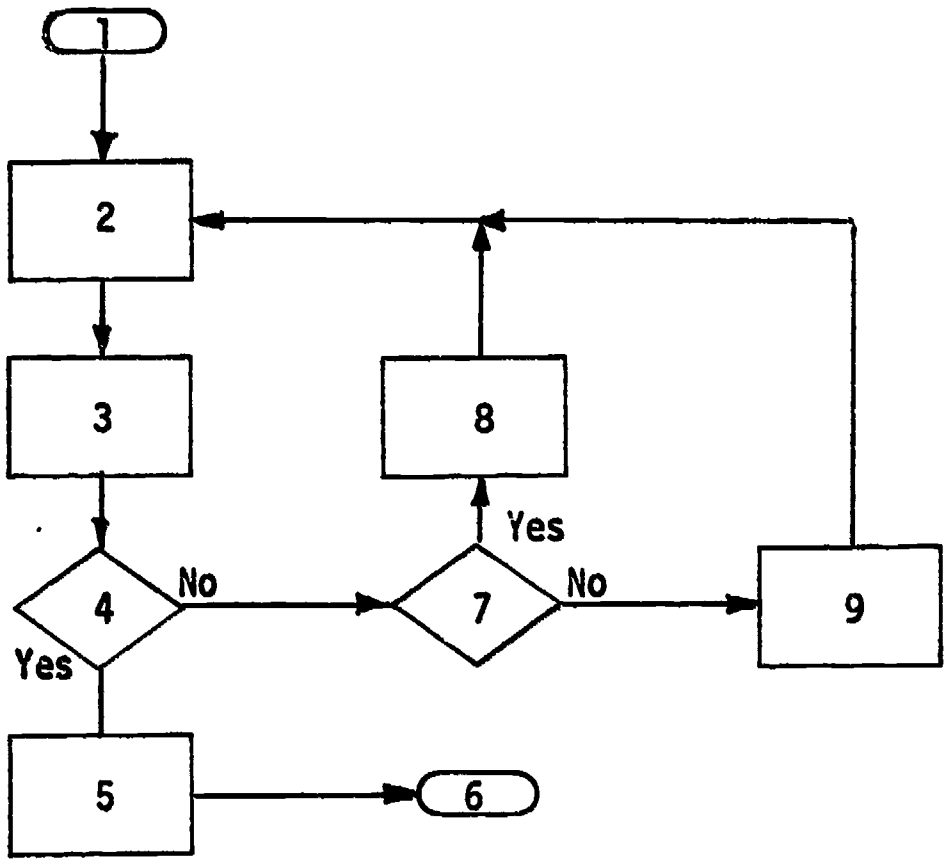

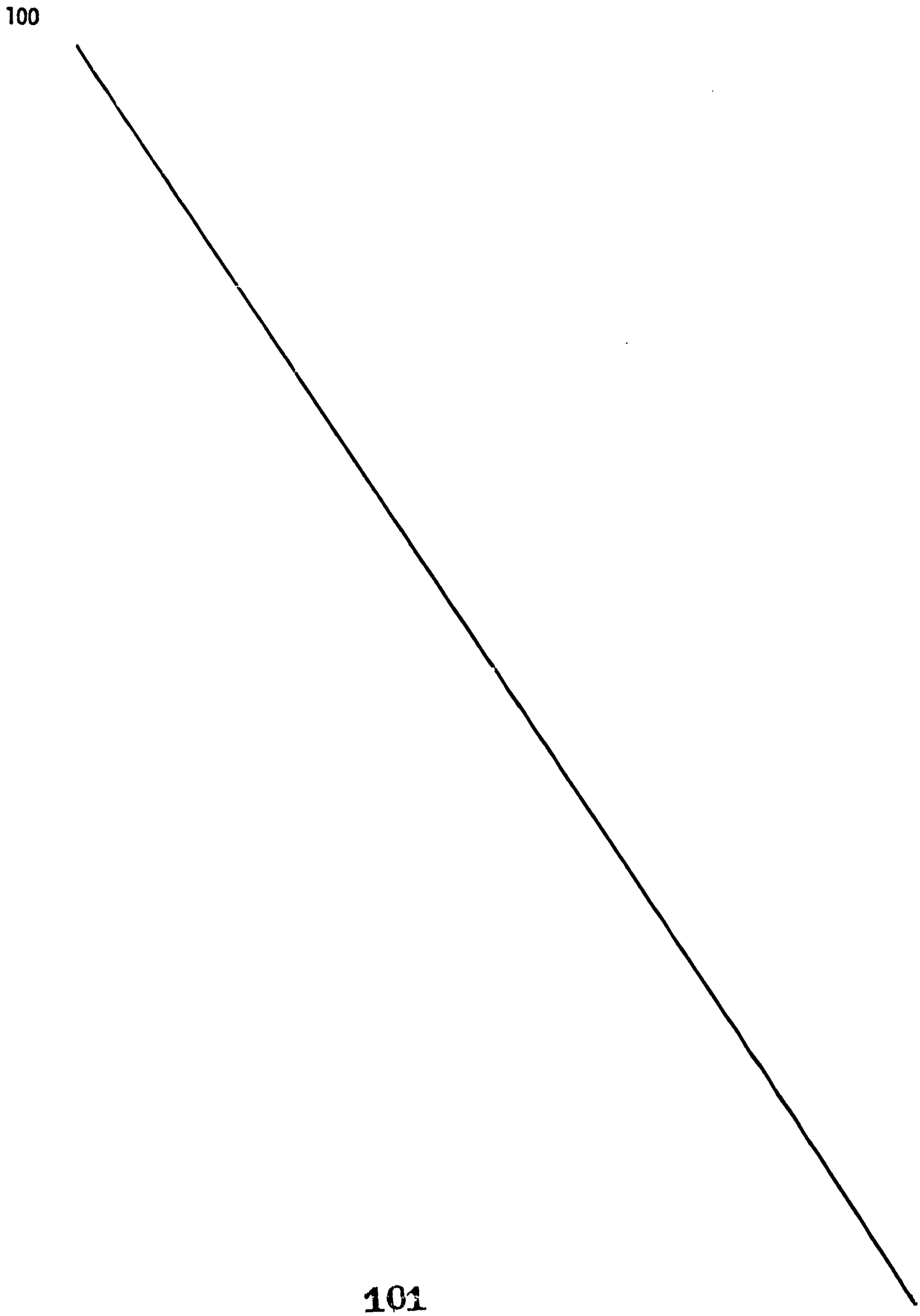
100

Responses Checked for Key Parts

When one thinks of the number of possible combinations that a student could type a set of three correct words, he realizes that it would be quite a task if in each multiple-word response the various versions of the correct answer had to be listed! In CAI, functions can be used to scan the student's response for the words of the correct answer, evaluate the number correct, and inform the student which items are correct.

Testing for Specific Words in Student's Response

Since many varieties of both correct and incorrect responses can be made by students, it is often desirable to check for specific "key" words in the response and give feedback based on the number of words which matched the correct response. In this example, if at least six of the seven words are matched, the student is told he is correct and is branched to the next problem. If from one to five words are matched, the student is informed as to which words he had correct. If no words were matched, the student would be branched to a review section.

Key to Flowchart - Testing for Specific Words in Student's Response

1. Start
2. Problem is presented: Name six of the seven colors of the spectrum. Space once between each word.
3. The response is checked for correct words (red, orange, yellow, green, blue, indigo, violet). Is the number of matched words equal to or greater than 6?
4. Feedback for correct answer is given: You have the answer entirely correct. Very good.
5. Next problem
6. Is the number of matched words greater than or equal to 1?
7. The correct words from student's response are shown to him
8. Feedback for partially correct response is given: The list above indicates which colors you have correct. Give another answer including these you now have correct
9. Unrecognized response noted
10. Feedback for answer with no correct words given: You aren't doing very well. It appears you need a review.
11. Review of concepts from which branch will be made back to current problem

Testing for Specific Words in Student's Response

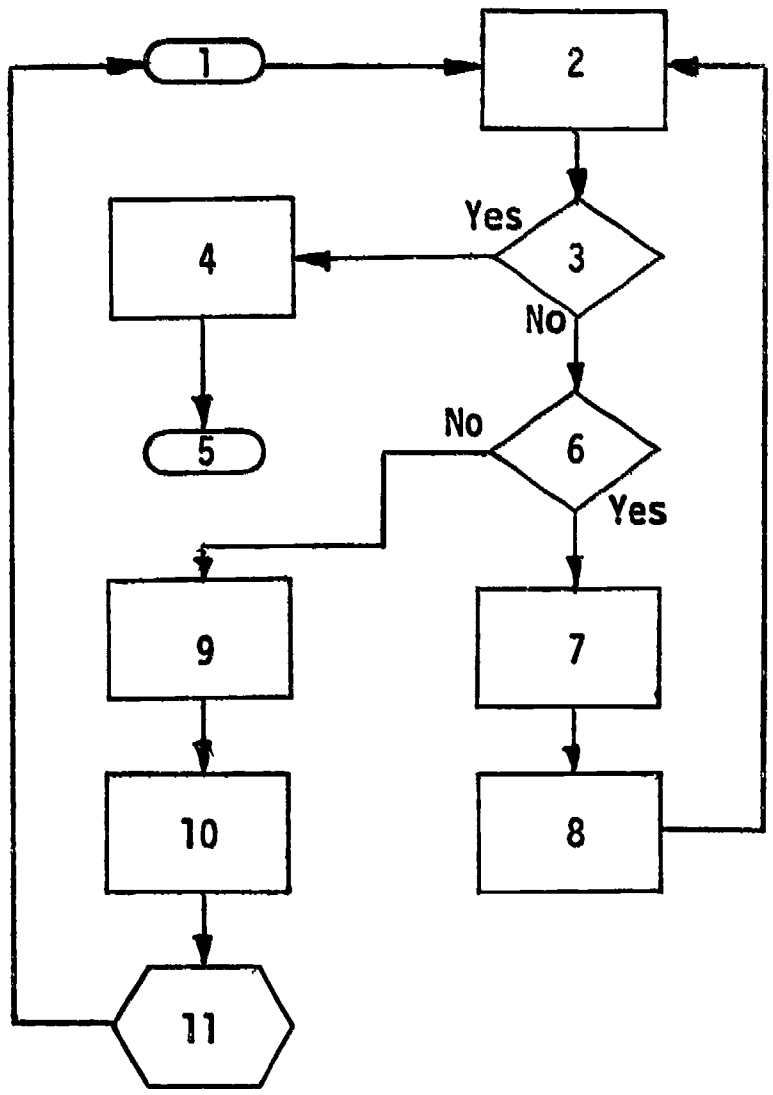

Checking Response for
Specific Character Strings

This section describes a routine which is designed to test a student's response for specific character strings (partial words), as opposed to complete key words. If any of the strings are found, the student's correct words (i.e., those words containing acceptable strings of letters) are fed back to the student.

Key to Flowchart - Checking Response for Specific Character Strings

1. Start
2. Display question: What are the three fundamental particles in an atom?
3. Student responds to the question
4. Test for key strings (i.e., "prot," "neut," "elect") to see how many match the correct strings; if all are found, go to 5; if one or more are found, go to 7; and if none are found go to 9
5. Display feedback for correct response
6. Next section of course
7. Edit student's response so that only the words containing correct strings appear
8. Display the edited response to indicate to the student which words were correct and give the message that the answer is partially correct and the student is to try again; go to 3
9. Indicate the answer is completely wrong and go to 3

Checking Responses for
Specific Character Strings

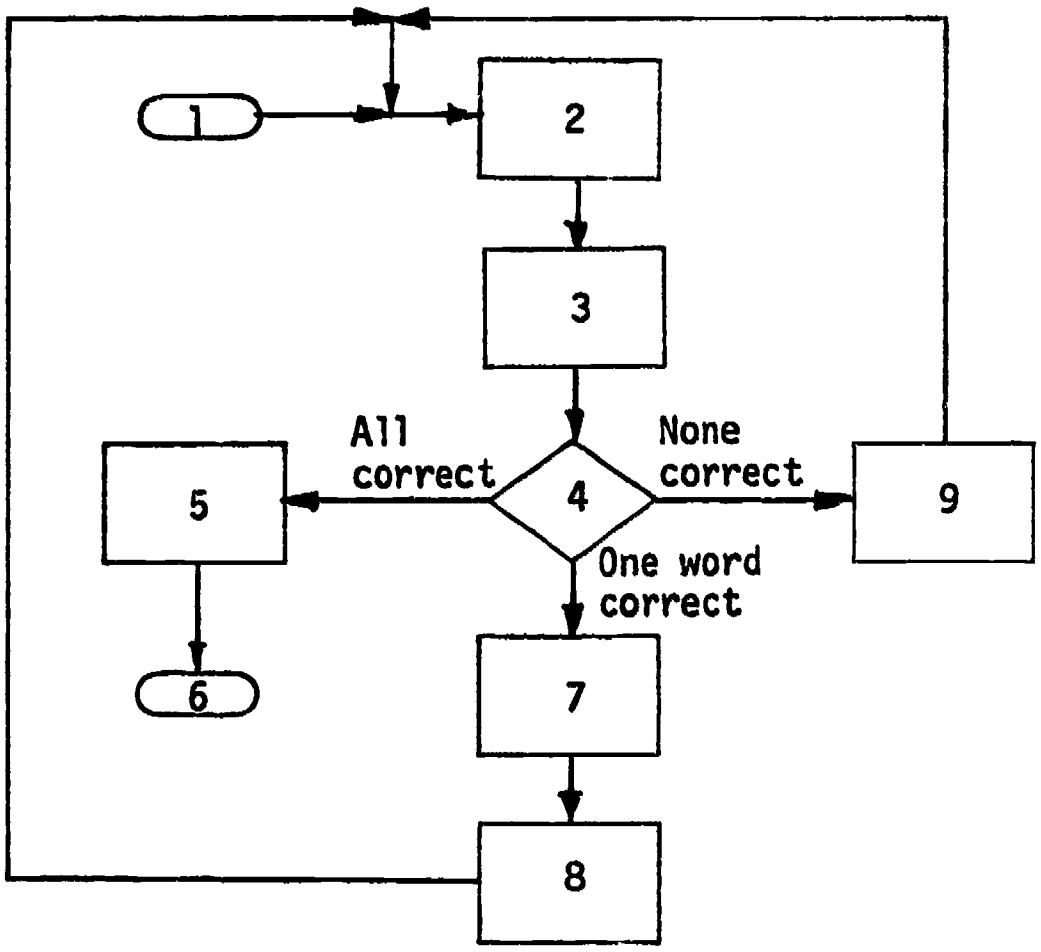

Multiple-Part Responses

A question often asked about CAI is whether or not the system can handle responses consisting of several parts such as sentences or mathematical equations. The answer is affirmative, and with the capability to write new functions and add them to the system, the possibilities are almost limitless. Student-constructed equations and complex numbers can be analyzed for correctness.

Creating a Response by Selecting Its Parts

A creative approach from the student's viewpoint can be used in the construction of mathematical open sentences (i.e., equations with unknown quantities). Given the mathematical characters □, =, +, 3, and 4, the student is asked to construct an open sentence using each of the items once. As an item is selected, it is excluded from the list so that it may not be used again, thus limiting the number of possible correct solutions.

On the first incorrect response, the student is told that the items do not form an open sentence. On subsequent incorrect responses, he is given a list of correct responses, is asked to construct one of these, and ask the proctor for help if needed.

Key to Flowchart - Creating a Response by Selecting Its Parts[13]

1. Start
2. Display the basic set of symbols: □, =, +, 3, 4
3. Give instructions for the problem
4. Student responds by indicating the order of his choices from the given items
5. Is the student's response a valid open sentence construction? if not, go to 8; otherwise, go to 6
6. Give feedback that response was correct and go to 7
7. Next phase of instruction
8. Is this the student's first mistake? if so, go to 9; otherwise go to 10
9. Feedback: The items do not form an open sentence in the order chosen. Answer again.
10. Display all possible valid constructions of open sentences using the given elements; ask the student to type one of these and to request help from the proctor if assistance is needed

[13] From Penn State's course segment General Mathematics, U. S. Office of Education through the School District of Pittsburgh, prime contract Grant No. OEG-0-8-055230-3479, Project No. 5523, IBM 1500 System; authors: Roland Lazzaro, John McNear.

Creating A Response by Selecting Its Parts

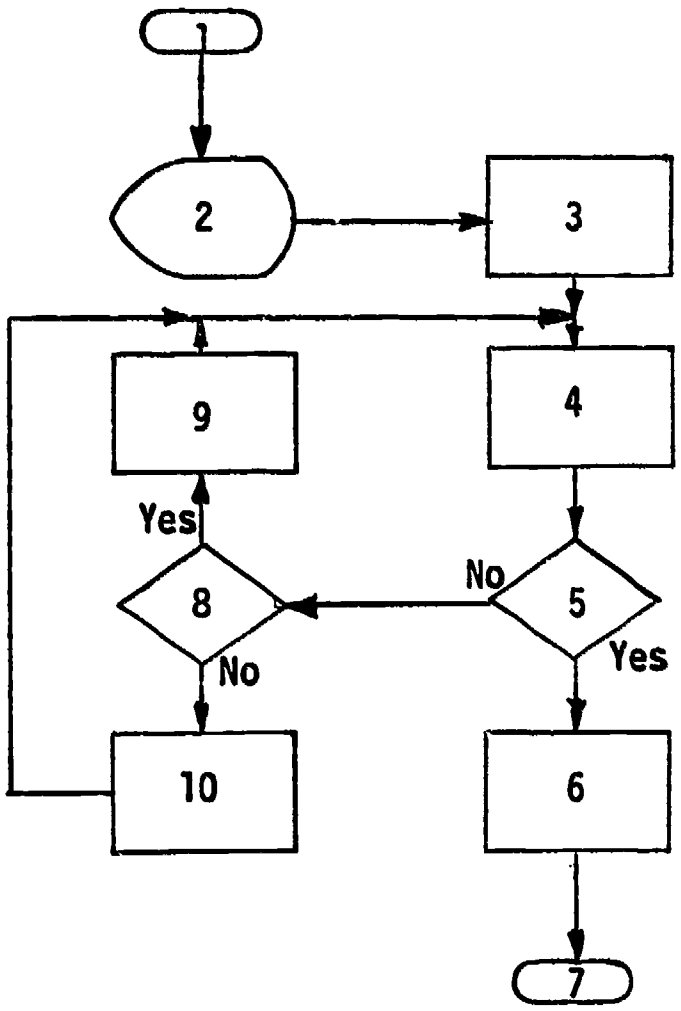

Two-Part Response by Student

Often a response includes two parts, each of which should receive specific feedback. In this example each part of the response consists of one word, either oxygen or hydrogen. Feedback is given indicating which of the words are correct. If the student does not answer the question correctly by the third attempt, he is branched to a review (International Business Machines Corporation, 1968, pp. 43-44, 52).

Key to Flowchart - Two-Part Response by Student

1. Question is presented: What are the two elements of water?
2. Student is allowed to respond with two separate words
3. Increment counter keeping track of number of responses to this question; initialize counter keeping track of which words are given correctly
4. Does student's response include the word "oxygen?"
5. Indicate to the student that "oxygen" is correct
6. Increment by 2 the counter keeping track of which words appeared in the response
7. Does the student's response include the word "hydrogen?"
8. Indicate to student that "hydrogen" is correct
9. Increment by 1 the counter keeping track of which words appeared in the response
10. Does the counter keeping track of which words appeared in the student's response contain 3?
11. Next problem
12. Has student made three attempts to answer the question?
13. Tell the student that the correct response is oxygen and hydrogen and indicate to the student that he will receive a review
14. Review from which student will be branched to the beginning of the question set
15. Give him feedback that the response is incorrect; ask him to answer again, giving both elements correctly

Two-Part Response by Student

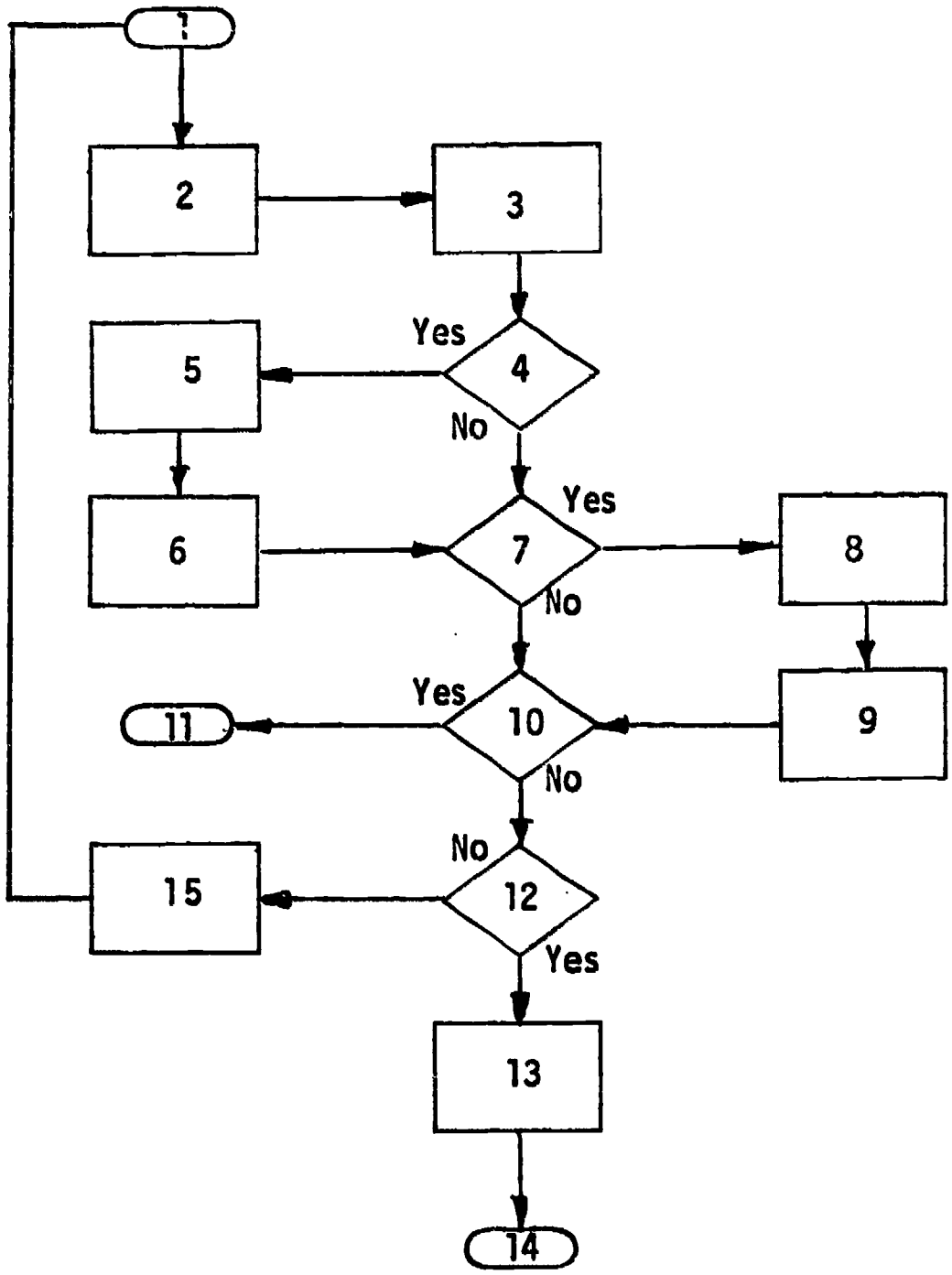

Responses Requiring Ordering

Many questions asked by instructors require more than one word in the response. In addition, in the correct response these words must be in a definite order. CAI has the capability to analyze responses containing several words, letters, numbers, or strings of characters. These key parts may be checked for order, position, and initial words or characters.

Arrangement by Student of Given Items in Proper Order

The problem for the student in this exercise is to arrange five particles (proton, neutron, electron, atom, and molecule) according to weight and for him to type only the initial letters in the proper order. The author wants the student to be able to enter the letters freely, in upper or lower case and with any reasonable combination of punctuation and spaces between the letters. Also, since he lists the particles, the author anticipates that a student may list the letters, i.e., separate them with carriage returns. Therefore, the author begins by deleting shift-characters, spaces, periods, commas, semi-colons, colons, dashes, and carriage returns from the student's response. He then tests for the correct answer: *manpe*. If this fails, the author tests for the presence of any of the other 21 letters of the alphabet and the numbers 1, 2, 3, 4, 5. If one or more extraneous letters or numbers are found, the student is told to type only the initial letters and to answer again.

At this point in the processing, if one of the letters *manpe* is found, it is not because the student entered a word such as "neutron." The author therefore tests for the presence of at least one of the letters. If at least one is found, the student gets a feedback which types the letter(s) he had in the correct order and types dashes for the letter(s) which he omitted or had out of order. For example, if the student's answer is *mpnea*, the feedback is: *ma---*.

If the student's answer does not contain at least one of the five letters, he receives feedback designed for an unrecognizable response.

Key to Flowchart - Arrangement by Student of Given Items in Proper Order[14]

1. Start; initialize to zero the counter in which number of responses is kept
2. Show the proper image on the image projector and display the statement: The proton is much heavier than the electron. The neutron is about the size of the proton and electron combined. Arrange the particles according to weight from the largest to the smallest. Type only the first letter of each word.
3. Display the list: proton, neutron, electron, atom, molecule
4. Student is given time to type his response
5. Punctuation and spaces are edited from student's response
6. Is student's response "*manape*?"
7. Give feedback: Correct: molecule, atom, neutron, proton, electron
8. Next problem
9. Increment by 1 the counter in which number of responses to the question is recorded
10. Has student responded more than four times?
11. Give proctor message asking proctor to assist student or give a review
12. Does student's response contain extraneous letters or numbers?
13. Display: Type only the initial letter of each particle (in order)
14. Is at least one of the letters in the student's response in the correct order?
15. Give feedback indicating which letters were placed in proper order
16. Is this the first unrecognized response?
17. Display: Reread the paragraph above and consider the relative weight of each particle. Then type the initial letter of each particle from the largest to smallest
18. Is this the second unrecognized response?
19. Feedback: The molecule is the largest. An m should be your first letter. Try again.
20. For all additional unrecognized responses feedback is as follows: Hint--Each atom is composed at least of one electron, proton, and neutron. Answer once again.

---

[14]From Penn State's course segment Atomic Energy. Project No. 5-85-074 IBM 7010 or 1410; author: David Gilman.

Arrangement by Student of
Given Items in Proper Order

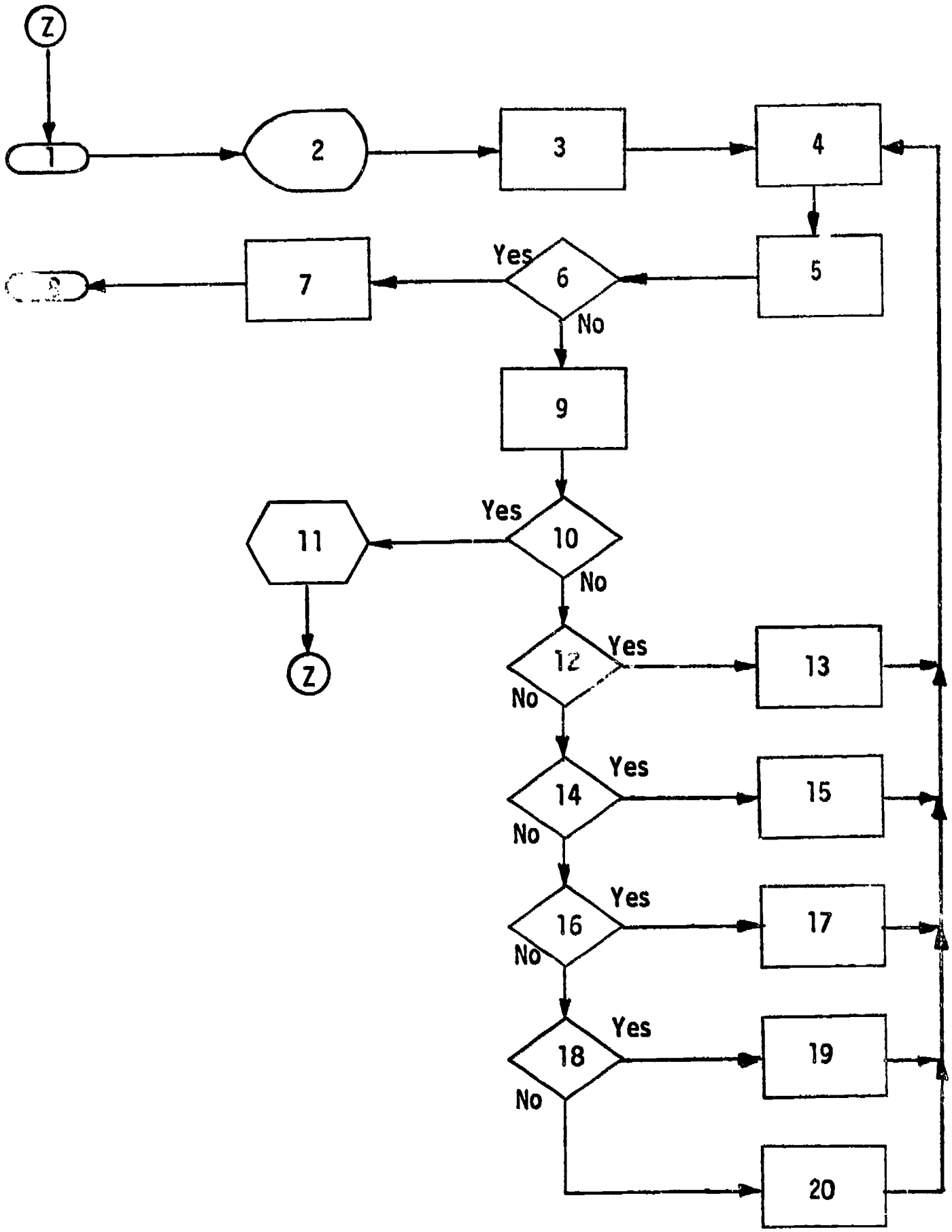

Analyzing a Response
Containing Ordered Words

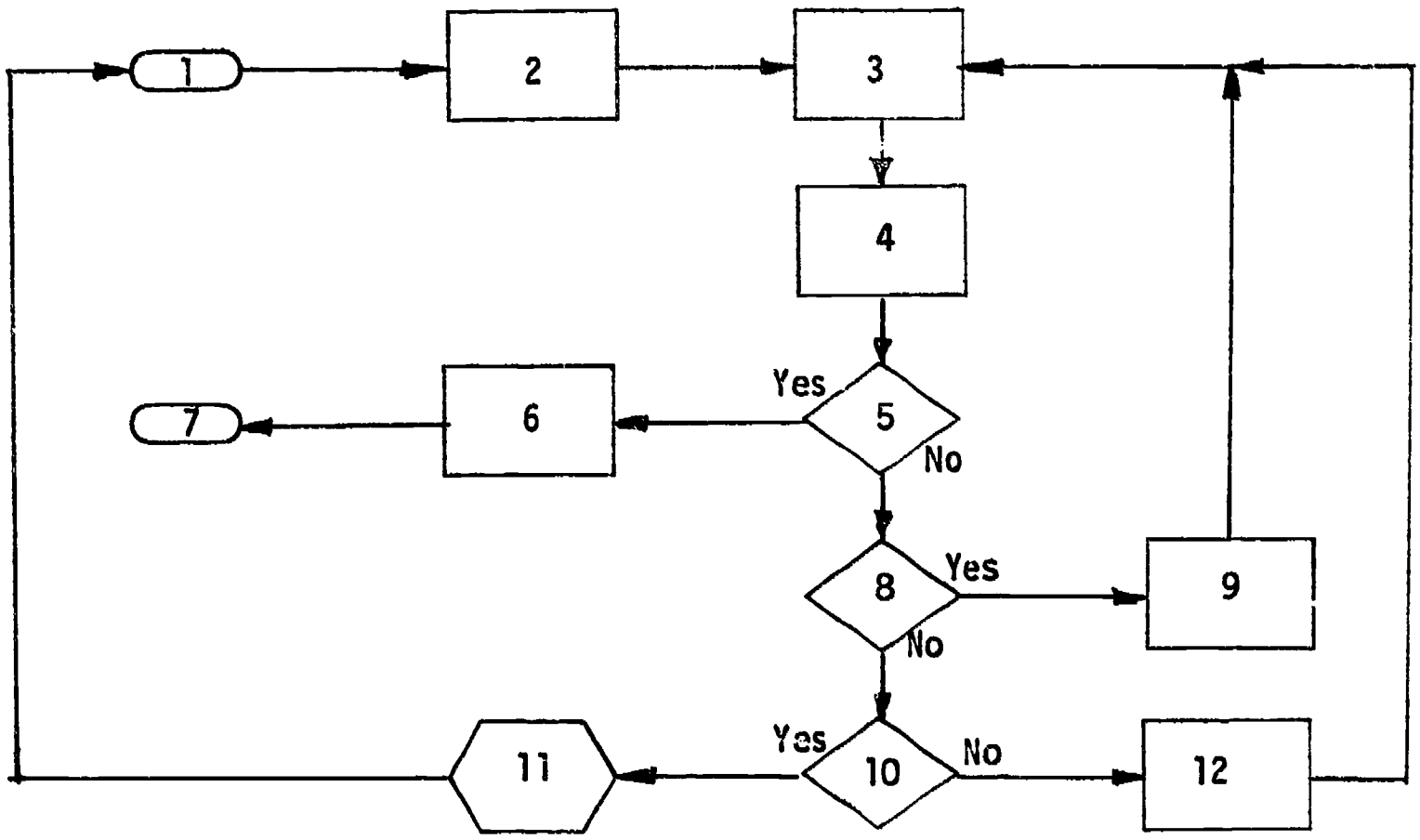

Analyzing a Response Containing Ordered Words

Many times a significant part of the response is the order in which the words of the response are given. An example would be a request to identify the four seasons of the year beginning with the season of the month of January.

In this example, for the student's answer "fall winter spring summer," feedback would be given in the form "winter spring summer ----" with the statement that the dashes indicate an omission or improper order of the season.

In order to eliminate the resulting confusion if the word autumn would be used in place of fall, prior to checking the response, "autumn" would be edited to "fall."

Key to Flowchart - Analyzing a Response Containing Ordered Words

1. Start
2. Presentation of question: What are the four seasons of the year, starting with the season in which January is?
3. Student responds
4. Any appearance of "autumn" in the student's response is edited to "fall."
5. Does the response contain "winter spring summer fall" in proper order?
6. Give feedback that the response is correct and all seasons are in the proper order
7. Next problem
8. Does the student's response contain at least one correct word?
9. Give feedback as to which words are in the proper order and ask the student to answer again
10. Has the student responded with an unrecognizable response two times?
11. Remedial instruction on the seasons of the year
12. Give feedback that the response is totally incorrect and the student should try once more to answer the question correctly

Numerical Responses

Many types of numerical responses may be analyzed in a CAI system. Responses may be checked precisely or to determine whether they fall into a specified range. Several numbers may be checked simultaneously; the numerator and denominator of fractions may be checked individually.

Testing for a Numerical Response within a Specified Range

An author may want to accept any response in which the integer portion of the number in a response is correct, regardless of the value of the decimal places or the nature of the text typed along with the number.

Proper coding makes it possible to pick a numerical field from a response, convert it to an integer, and store it in a specific counter. The contents of the counter are then compared with the correct response to test whether the student's response was acceptable.

In the example below, the integer is extracted from the response. If the response is exactly correct (5.3), the student will see the correct answer feedback. If the student is almost correct (5.0 to 5.9), he is told the correct response and continues on. If his response does not include the correct integer portion, he is branched to a review.

Key to Flowchart - Testing for a Numerical Response within a Specified Range[15]

1. Start of problem
2. Problem is presented: Measure line a on the handout. Give your answer in centimeters
3. Student is given a chance to respond
4. Did response match correct answer: 5.3?
5. Feedback for correct answer: Correct
6. The integer portion of the first numerical field is picked out from the response and placed in a counter
7. Does the counter contain 5?
8. Feedback for answer within acceptable range: Correct. The answer is 5.3 and you are close enough to it
9. Feedback for unacceptable answer is displayed. No, there are 5 whole centimeters plus 3 tenths of a centimeter. Let's try a review
10. Pause so that student can measure line a again
11. Special review on measurement in the metric system
12. Next problem

[15]From Penn State's course segment Metric System of Measurement. Project No. 5-85-074, IBM 7010 or 1410; author: David Gilman.

Testing for a Numerical Response within a Specified Range

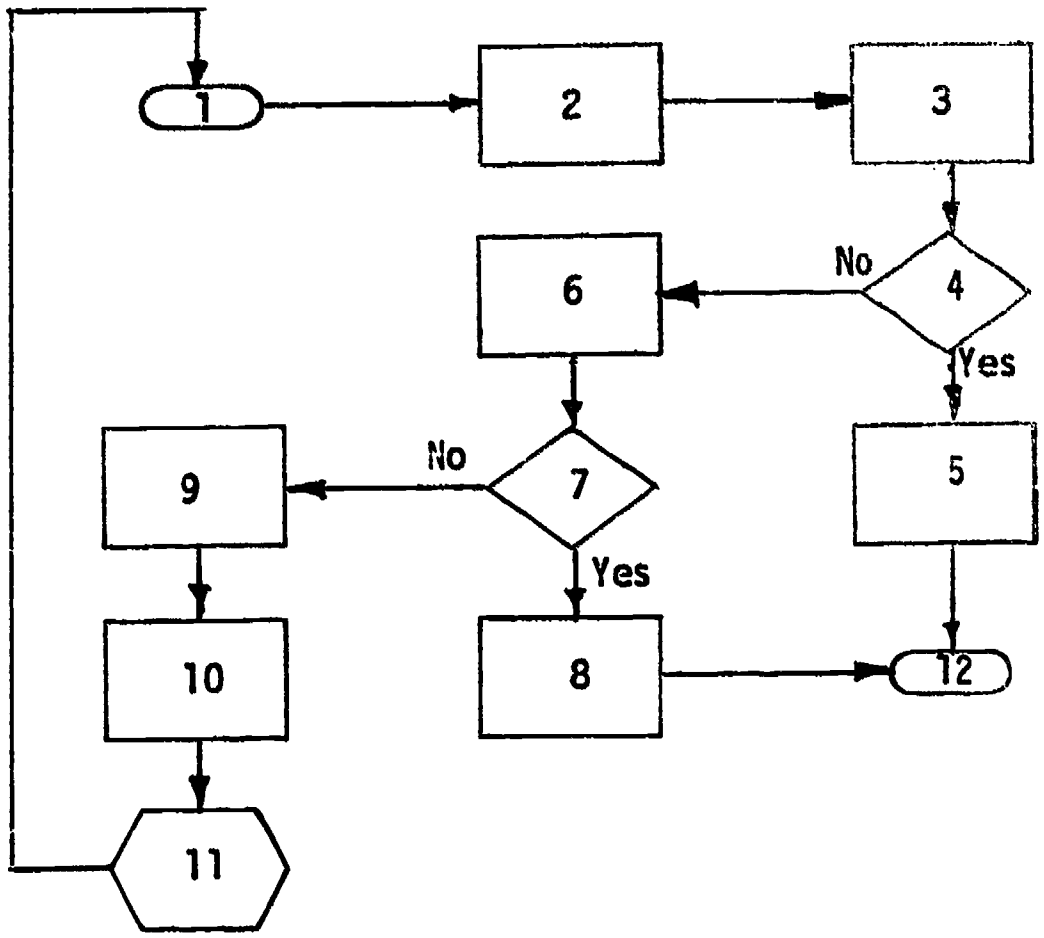

Testing for a Precise Numerical Response

Let us assume in this example that the desired numerical response must be precise to nearest tenth. The student is allowed to respond any number of times and at each response he is told whether his numerical response is too high or too low, and as the range of his response from the precise response is decreased, the feedback gives some encouragement such as "You are very close."

Key to Flowchart - Testing for a Precise Numerical Response

Assume that the desired response is 23.7 or between 23.69 and 23.71.

1. Question is presented
2. Student responds
3. Is response between 23.69 and 23.71?
4. Give feedback that response is correct and go to 5
5. Next question
6. Is response between 23.6 and 23.8?
7. Give feedback that student's response is "Extremely close but" and go to 12
8. Is response between 23.0 and 24.0?
9. Give feedback that student's response is "Very close but" and go to 12
10. Is response between 20.0 and 30.0?
11. Give feedback that student's response is "Quite close but" and go to 12
12. Is response less than or equal to 23.69?
13. Give feedback "response is too low."
14. Is response greater than or equal to 23.71?
15. Give feedback "response is too high."
16. If student reaches this point, he has not typed a number so he is told to type a number

Testing for a Precise Numerical Response

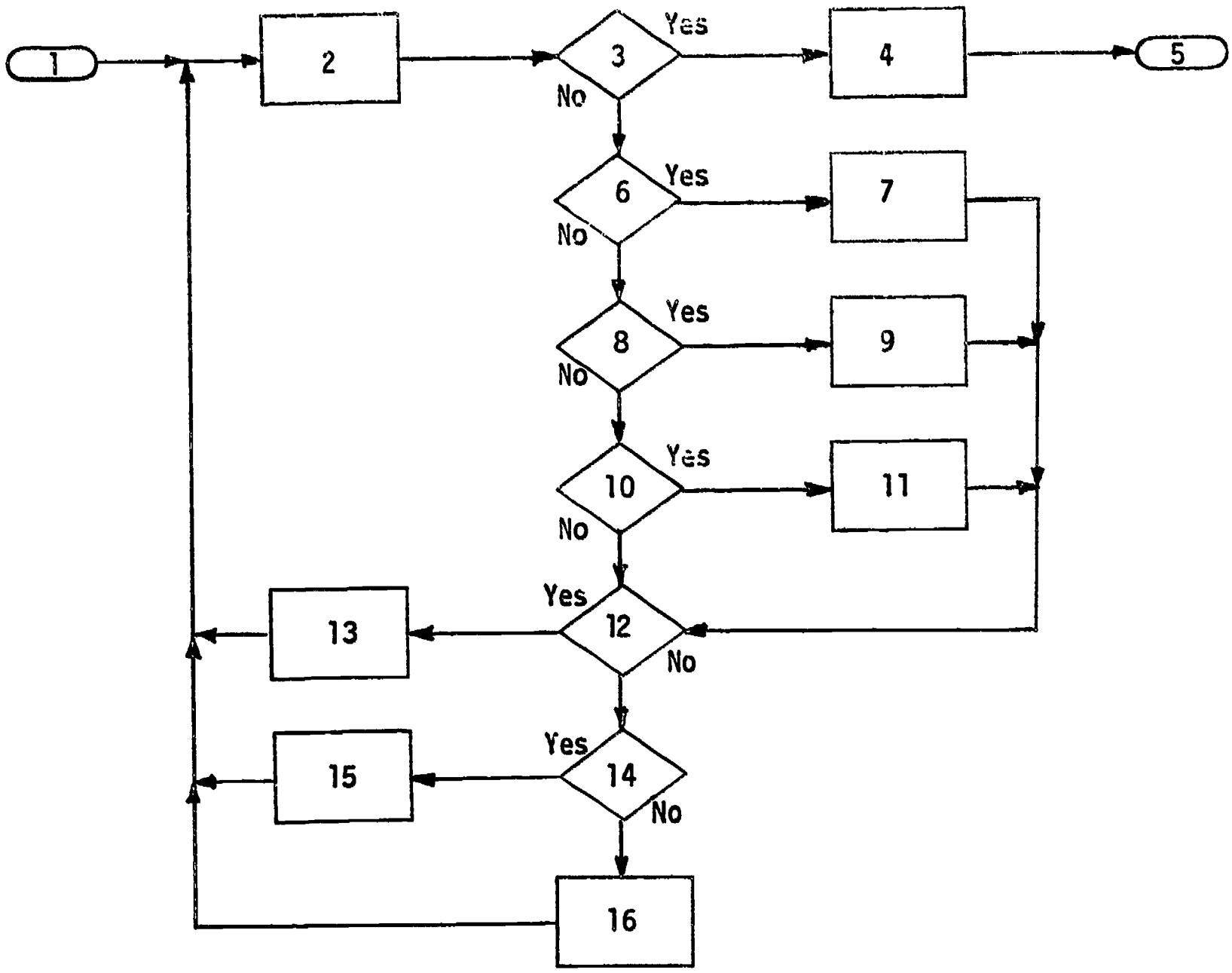

REFERENCES

Briggs, L. J. Sequencing of instruction in relation to hierarchies of competence. Pittsburgh, Pennsylvania: American Institute for Research, 1968.

Grubb, R. E. Learner-controlled statistics. Programmed Learning, January 1968, Vol 4, pp. 38-42.

Heimer, R. T., Kocher, F., Lohes, J. J. A program in contemporary algebra. Book 5, Exponents, radicals, and quadratic equations. New York: Holt, Rinehart and Winston, Inc., 1963.

International Business Machines Corporation. IBM 1500 coursewriter II, author's guide. San Jose, California: Special Systems Programming Documentation, 1968.

International Business Machines Corporation. IBM 1500 coursewriter II author's guide. Part 1, Course planning. San Jose, California: IBM Systems Development Division, 1967.

GLOSSARY

ANSWER SET - The responses to a question, correct or incorrect, that a student may make which are anticipated at the time of course preparation by the author.

BRANCH - A place in the course where the sequence of flow is altered to any instruction other than the next one in the course.

CHARACTER STRING - A group of contiguous alphabetic characters.

CORRECT ANSWER - A correct response that the student may make which has been anticipated by the author of the course.

COUNTER - A storage area accessible by a course in which simple arithmetic operations, such as addition and subtraction, may be performed.

COURSE - A sequence designed to achieve specified instructional objectives.

COURSE SEGMENT - A logical part of a course.

CRITERION - The performance specified to be met before a certain path will be taken in a course.

EDIT - The replacement of specified characters or character strings with some other character(s) or by compressing out.

ENTER - An indication by the student that he has completed his response to a question.

FEEDBACK - A statement to the student given after a response has been entered, often relative to whether or not his response was correct.

FRAME - A small part of a course in which one or two paragraphs of instruction may be presented or one question is asked and analyzed.

FUNCTION - an available routine, accessible by the course, which is designed to do specialized processing.

IMAGE - A black and white or colored still picture stored on film.

INCREMENT - A numerical change in the contents of a counter, made by addition or subtraction of a specific number.

INITIAL CHARACTERS - Some of the first characters of a character string.

INITIALIZE - To set the contents of a counter or a switch to a specific number, usually zero, or to place blanks in a buffer or return register.

INSTRUCTION - A sequence of a course designed to assist the student in achieving some objective of the course

or

- a direction for the computer to follow when executing a course; i.e., one statement from the programing language.

INSTRUCTIONAL SESSION - The period from when the student signs on a course until he signs off.

INSTRUCTIONAL STATION - The place at which the student sits to receive instruction; the station would include some means of presenting information to the student and receiving responses.

KEY WORDS, KEY STRINGS, KEY LETTERS - Essential parts of the correct answer, i.e., those parts which, if present, indicate that the response is correct.

LABEL - The name given to a small part of a course, such as a frame or problem, for the purpose of referencing that particular part of the course.

LOAD - To place a certain number into a counter or switch or specific characters into a buffer or return register.

n - Used to represent an arbitrary number when specific information is not desirable; e.g., concept n, section n, n questions.

NEXT PROBLEM - The problem which follows immediately in sequence the problem currently under discussion.

NUMERICAL FIELD - A string of contiguous integers, without intervening spaces or decimal points.

PERFORMANCE - The reactions of the student while taking a course, in terms of data such as number of correct answers, number of response attempts, and his place in the course.

PROBLEM - An individual question and the associated response analysis.

PROCTOR - The person available to assist students with difficulties that arise in receiving instruction via computer assisted instruction.

PROCTOR MESSAGE - A message generated in a course which is sent to the proctor via the proctor station.

PROCTOR STATION - The place to which proctor messages are sent by a course, usually a typewriter.

QUIZ - A series of questions which are presented to the student to determine his understanding of one or a few concepts.

REMEDIAL INSTRUCTION - Instruction designed for the student with prior exposure to the concepts but for whom performance has indicated a lack of understanding.

RESPONSE ANALYSIS - The determination as to whether a student's answer is correct, partially correct, wrong, or unrecognizable.

RESPONSE ATTEMPT - One answer, given and entered by the student.

RESPONSE LATENCY - The time from when a student is given the opportunity to respond (e.g., keyboard is unlocked) until he enters his response.

RESTART POINT - A point in a course where instruction may be resumed after the student has been signed off.

RESTART RECORD - The information maintained by the computer about a student while he is signed off a course.

RETURN REGISTER - A storage area accessible by a course into which a course label may be placed.

REVIEW - A recapitulation of the concepts covered in recent instruction, usually including additional questions and response analysis.

SEQUENCE - The order in which the course content is presented.

SIGN-OFF - An indication by the student to the computer that he is ready to stop taking a course.

SIGN-ON - A message to the computer that a person is ready to begin or continue taking a course.

STUDENT RECORDS - The information accumulated by the computer about a student's performance while taking a course; included may be his response(s) to a particular question, number of response attempts on a problem, number correct in a quiz, etc.

SUBROUTINE - A routine written as part of a course which may be used repeatedly.

SWITCH - A storage area of the computer in which can be stored a zero (0) or a one (1), zero indicating an "off" condition and one indicating the "on" condition, thus making it possible by loading a switch to note whether a certain point in the course was passed, whether the student responded in a certain way, and so on.

TEST - A measure of whether concepts were understood by the student.

TIME-OUT - The condition following a response request in which the student takes longer to answer than the time allowed by the author.

UNRECOGNIZED OR UNANTICIPATED RESPONSE - A response by the student which has not been included in the list of expected correct or incorrect responses.

UPDATE STUDENT'S RECORD - A point in the course at which the contents of the student's restart record are adjusted to include recent changes in contents of storage as are (counters, switches, etc.) accessible by the course.

WRONG ANSWER - An incorrect response that a student may make which has been anticipated by the author of the course.