DOCUMENT RESUME

ED 031 920 EM 007 204

By-Carpenter, C.R.; And Others
The Film Analyzer; Rapid Mass Learning. Technical Report.
Pennsylvania State Univ., University Park. Coll. of Education.
Spons Agency-Office of Naval Research, Port Washington, N.Y. Special Devices Center.
Report No-SDC-269-7-15
Pub Date Oct 50
Note-20p.
EDRS Price MF-$0.25 HC-$1.10
Descriptors-Audiences, Audiovisual Instruction, Electromechanical Aids, Equipment Evaluation, Evaluation Methods, *Evaluation Techniques, Film Study, Human Engineering, *Instructional Films, *Mass Instruction, Measurement Instruments, Observation, *Polygraphs, Program Evaluation
Identifiers-Film Analyzer

The need for suitable equipment for research and for evaluation of instructional films, led to the planning, designing, and constructing of a new recording system, the Film Analyzer. The Film Analyzer will record and time continuously a range of reactions and responses of individuals in groups up to a maximum of 40 people to various kinds of instructional and informational programs. There are three essential parts to the Film Analyzer. These are the polygraph recorder, the coding relays, and the individual response stations. These mechanisms are described in this report with the aid of pohtographs, diagrams and charts. The Film Analyzer is operated in conjunction with the Classroom Communicator which has been described in a separate report. Although the Film Analyzer was constructed for use in research and in the evaluation of complex types of instructional and informational programs, a wide range of other uses may prove to be desirable and feasible, and some practical applications of the equipment are suggested. (CC)

TECHNICAL REPORT - SDC 269-7-15

THE FILM ANALYZER

(Rapid Mass Learning)

The Pennsylvania State College
Instructional Film Research Program
October 1950

Project Designation NR-781-005
Contract N6onr-269, T. O.VII
SDC Human Engineering Project 20-E-4

Planning Committee:

C. R. Carpenter (Chairman), F. T. John, J. B. Cannon, Jr., and S.Roshal

Responsible Engineers:

F. T. John and J. B. Cannon, Jr.

Report Prepared by:

C. R. Carpenter and R. C. Eggleton
F. T. John and J. B. Cannon, Jr.

FOR THE PENNSYLVANIA STATE COLLEGE:

Dean M. R. Trabue
Responsible Administrator

C. R. Carpenter
Program Director

FOR THE SPECIAL DEVICES CENTER:

Reviewed for Human Engineering Branch:

J. Gaberman
Project Engineer

C. P. Seitz, Ph.D.
Head, Code 912

Submitted:

C. S. Rhoads
Technical Director

Approved:

J. R. Ruhsenberger, Captain, USN
Commanding Officer and Director

CONTENTS

SUMMARY

The realization of the need for suitable equipment for research, and the evaluation of instructional films led to the planning, designing and constructing of a new recording system, the Film Analyzer.

In brief, the Film Analyzer will effectively record continuously a range of responses of individuals in groups up to a maximum of 40 people. Reactions and other responses to various kinds of instructional and informational programs can be accurately timed. When used with films, the records can be synchronized with the film as it is projected.

There are three essential parts of the Film Analyzer. These are the polygraph recorder, the coding relays and the individual response stations (40). By means of photographs, diagrams, charts and verbal descriptions these mechanisms are explained in this report. The Film Analyzer is operated in conjunction with the Classroom Communicator which has been described in a separate report (Technical Report SDC 269-7-14), "The Classroom Communicator."

The Film Analyzer was constructed for use in research and in the evaluation of complex types of instructional and informational programs. However, a wide range of other uses may prove to be desirable and feasible. Some practical applications for the equipment are suggested.

THE FILM ANALYZER

INTRODUCTION

Need for new Equipment. Scientific research of any kind requires tools, instruments and equipment which are appropriate to the requirements of the problems being investigated. Research on the complex problems of communication by means of the sound motion pictures is no exception. Such research also requires especially designed and suitable instruments.

Procedures and methods available in 1947, when the Instructional Film Research Program was established, were considered to be inadequate or too limited in some respects for intensive research on instructional films. Written tests have the limitations of requiring, that they be given after the showing of a film or at the end of a sequence or the program as a whole. It is difficult or impossible with written tests to measure reactions while a program is in progress; or stated differently, during active perceptual, learning, and decision processes Therefore, measures or judgments which correspond to different segments or periods of the film are difficult to obtain by means of written tests and other conventional methods. Furthermore, written tests require lighted rooms. In addition there are available audience analyzer types of equipment which summate the responses of members of an audience or class. The like-neutral-dislike curves are examples of this type of recording. This method does not give detailed data on the judgments, or answers, of the individuals in the groups making responses.

Film evaluations by means of the judgments of qualified experts have become a standard procedure which, in all probability, will long continue to be used. When a variety of judgments on a film as a whole are required, it is most likely that the demands exceed what should be expected of the individuals in terms of span of attention, abilities to retain impressions, and abilities to make reliable decisions. This is especially true for detailed and analytic judgments. Equipment and methods were needed, therefore, for the continuous recording of observations, evaluations, and decisions, relative to precisely defined and limited tasks assigned to members of the audiences. This should be possible while the film is being screened, and without interrupting the flow of the program. For purposes of detailed analysis, furthermore, it is often desirable to have records of a range of decisions or judgments made by individuals in a group of as many as forty people.

Although written tests and audience response records of the type widely used in 1947 were satisfactory for some purposes, those who planned the Instructional Film Research Program foresaw the need for recording equipment which would be more adequate for research on analytic problems of film instruction and communications. (See Section on Possible Uses, p.16.)

Functional Requirements. The Planning Committee which worked out the original specifications for a Film Analyzer consisted of C. R. Carpenter, F. T. John, J. B. Cannon, Jr., and S. Roshal. A number of functional or performance requirements were formulated without regard to the problems which would be encountered in design and construction. The engineers, F. T. John and J. B. Cannon, Jr., accepted responsibility for building equipment which would meet the following functional specifications:

1. The equipment should continuously record the individual reactions of the members of a group on a five-point scale and record the results on a chart.

2. Regular intervals of time and/or film footage should be marked on the chart for synchronizing the reaction record with the film. Provision should be made for recording other information, such as intervals of film sequences, by means of reference marks on the chart.

3. The response station for each individual should be semi-private, and should contain five keys or switches for recording multiple-choice reactions. A key when pressed should remain down until another key is pressed, at which time the former key should be released automatically.

4. The equipment should work quietly and reliably.

5. The equipment should be designed to accommodate an audience up to a maximum of 40 individuals, but the design should not exclude the possibilities for greater numbers of people in audiences.

6. The recorded information should be printed on a continuous chart of relatively narrow width.

7. The recording element should be a dry-writing system, rather than a system using ink.

8. Since large quantities of recording paper are likely to be used, the paper should be inexpensive and readily obtainable.

9. The paper drive should be self centering and no adjustments should be required after insertion of the paper.

10. The record should be immediately visible.

It will be recognized that many of the foregoing functional specifications grew out of, and are identical with, the functional specifications established for the Classroom Communicator.

Construction Plans. Several means of getting the Film Analyzer constructed were considered. There was the possibility that the sub-contracts could be written with commerical laboratories for the design and construction work. This possibility was ruled out because it would be difficult for those who would use the equipment and who knew the operational requirements to coordinate and control the engineering work. Furthermore, it was found that unless definite and final specifications could be stated in a contract the cost would be prohibitive. A second possibility was to have the design and construction work done by the Electrical Engineering Department of the College. This was proposed, but was not feasible.

Finally, it was decided to form an Engineering Section of the Instructional Film Research Program which, in cooperation with the Department of Physics and particularly the Physics Shop, would design and construct the Film Analyzer. Simultaneously the Engineering Section was to design and construct an interrelated system, the Classroom Communicator, which has been described in another report.[1]

Construction costs were kept at a minimum. Standard and available components were used in preference to more expensive custom-built parts. Surplus war materials were used whenever possible. Furthermore, designs were made which could be worked out within the limits of available shop facilities and skills. These limitations posed very difficult problems for the engineers who nevertheless fulfilled, and in some instances exceeded, the requirements or functional specifications. However, some of the characteristics of the equipment as it now exists need to be modified and improved.

THE EQUIPMENT

The major components of the Film Analyzer are the polygraph recorder, the coding relays, and the response stations (Fig. 1). This continuous response recorder was designed to work in conjunction with the Classroom Communicator. Both devices use the same response stations for information input, also the coding relays are housed in the console of the

---

1 See Technical Report SDC 269-7-14, "The Classroom Communicator".

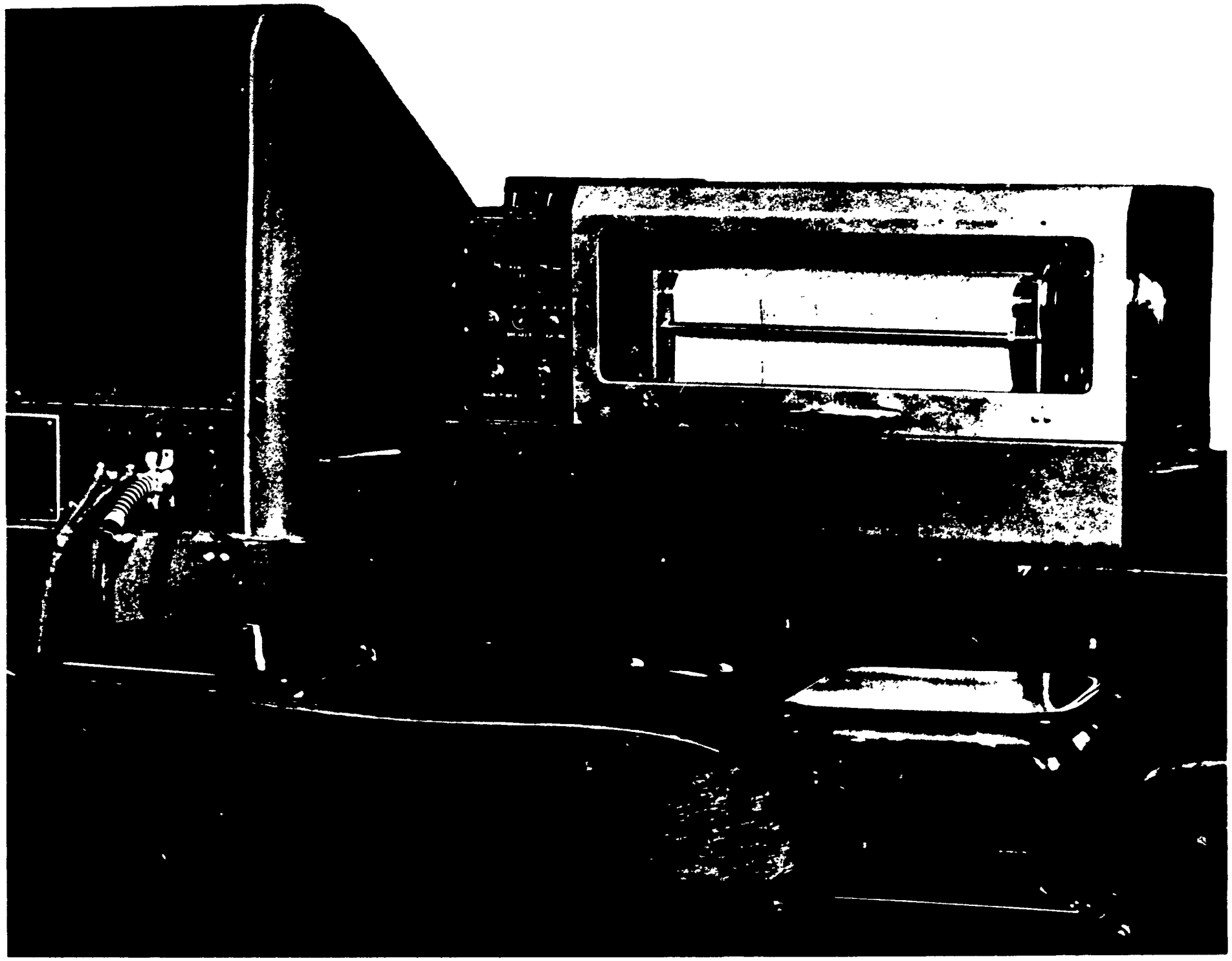

Fig 1 The Film Analyzer system showing Response Stations (bottom), Classroom Communicator Console (left), and Polygraph Printer (right)

Classroom Communicator, but these relays are associated with the Film Analyzer only. This joint use of certain components by the two machines was strictly a matter of economy; however, they might well be constructed separately and used independently.

The interrelation of the parts of the Film Analyzer system is diagramed in Fig. 2.

The Polygraph Recorder and Coding Relays

The polygraph recorder (Fig. 4) is of unique design and its operation is as follows:

Records are made of responses from each of the 40 stations. The responses are recorded by means of a two-line code printed on a continuously moving paper strip 14" wide. The code is illustrated in Fig. 3. When the number one, or thumb key is pressed, one solid line will be recorded, for that particular station, as long as the key remains down. The other code symbols record responses from the other four keys. Thus, it is seen that compactness is achieved by the coded recording of six alternatives (1 through 5 and omit) in the space required by two parallel lines.

The Printing Mechanism. The method used for printing the code on the paper is diagramed in Fig. 5. The cam "C" of the polygraph rotates continuously and uniformly at 1750 rpm. When any of the 90 printer wires are raised they are struck by the cam and are thrown against a typewriter ribbon. The ribbon makes impressions on the moving band of paper. The record consists of a series of dashes which may form either a broken or a continuous line. The broken line is obtained by raising the printer wire intermittently. The raising of the printer wire is accomplished by energizing the coil of a relay armature to which the wire is attached. (The contacts have been removed from the relay as they serve no useful function in the design.) The broken or dotted lines are produced by connecting the coil to a source of direct current through an intermittent contact ("I" in Fig. 5). The continuous lines are produced by connecting the coil directly to the D. C. source. This causes the dashes to overlap and form continuous lines.

In the same way synchronizing timing marks are recorded along the side of the moving chart using the code system shown in Fig. 3. In this case the armatures are activated by a motor-driven cam, a mark 1/2" long being recorded every second. A short double line (parallel dashes) is recorded every ten seconds, and a similar short triple line every minute.

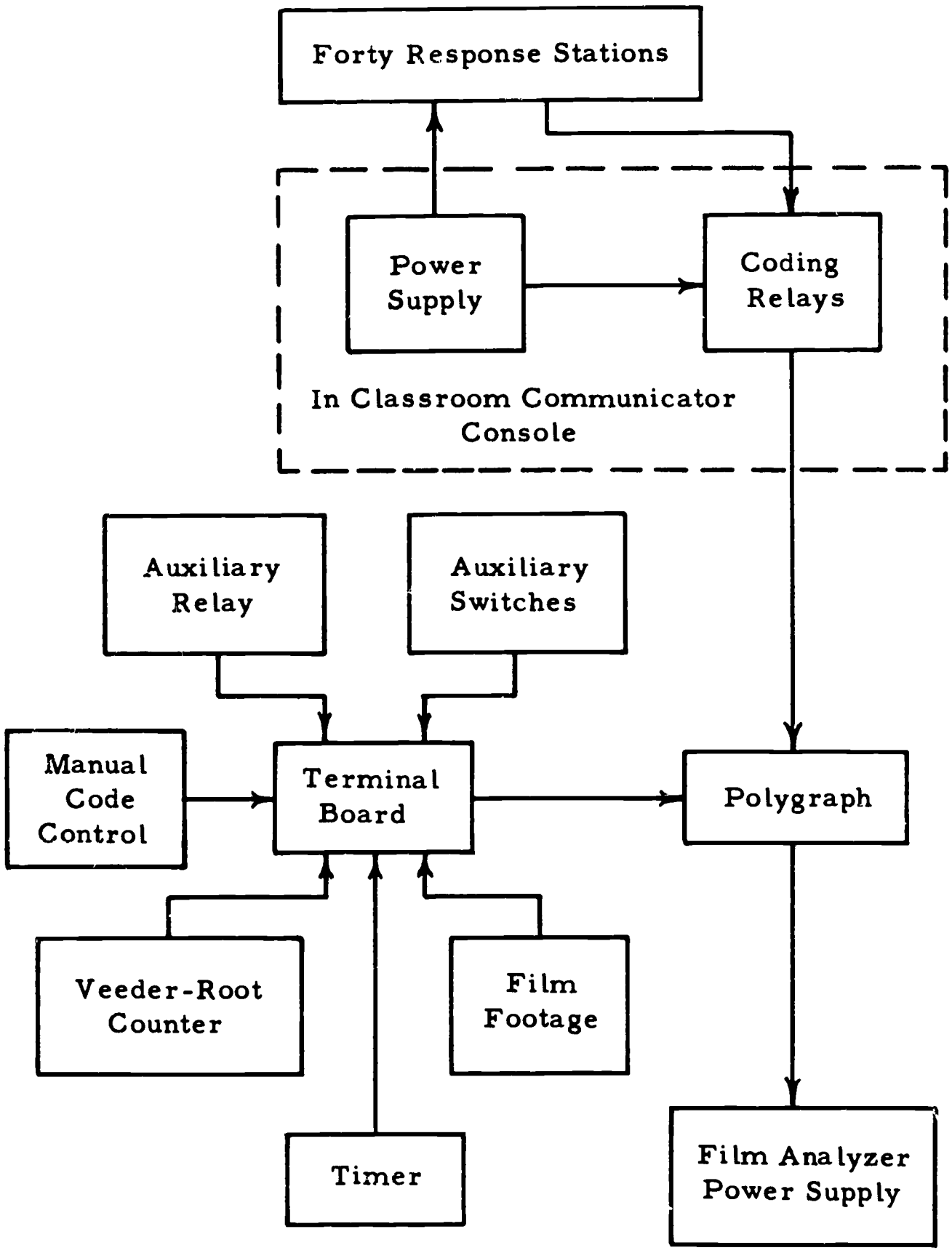

Fig. 2 Block Diagram of Film Analyzer System.

Response	Finger	Symbol
1	Thumb	|
2	Index	||
3	Middle	|||
4	Ring	||||
5	Little	|||||

Marginal Time Marks	
One Second	|
Ten Seconds	||
One Minute	|||

Film Footage Marks	
One Mark Every Eight Feet of Film	|

Fig. 3 Film Analyzer printing codes.

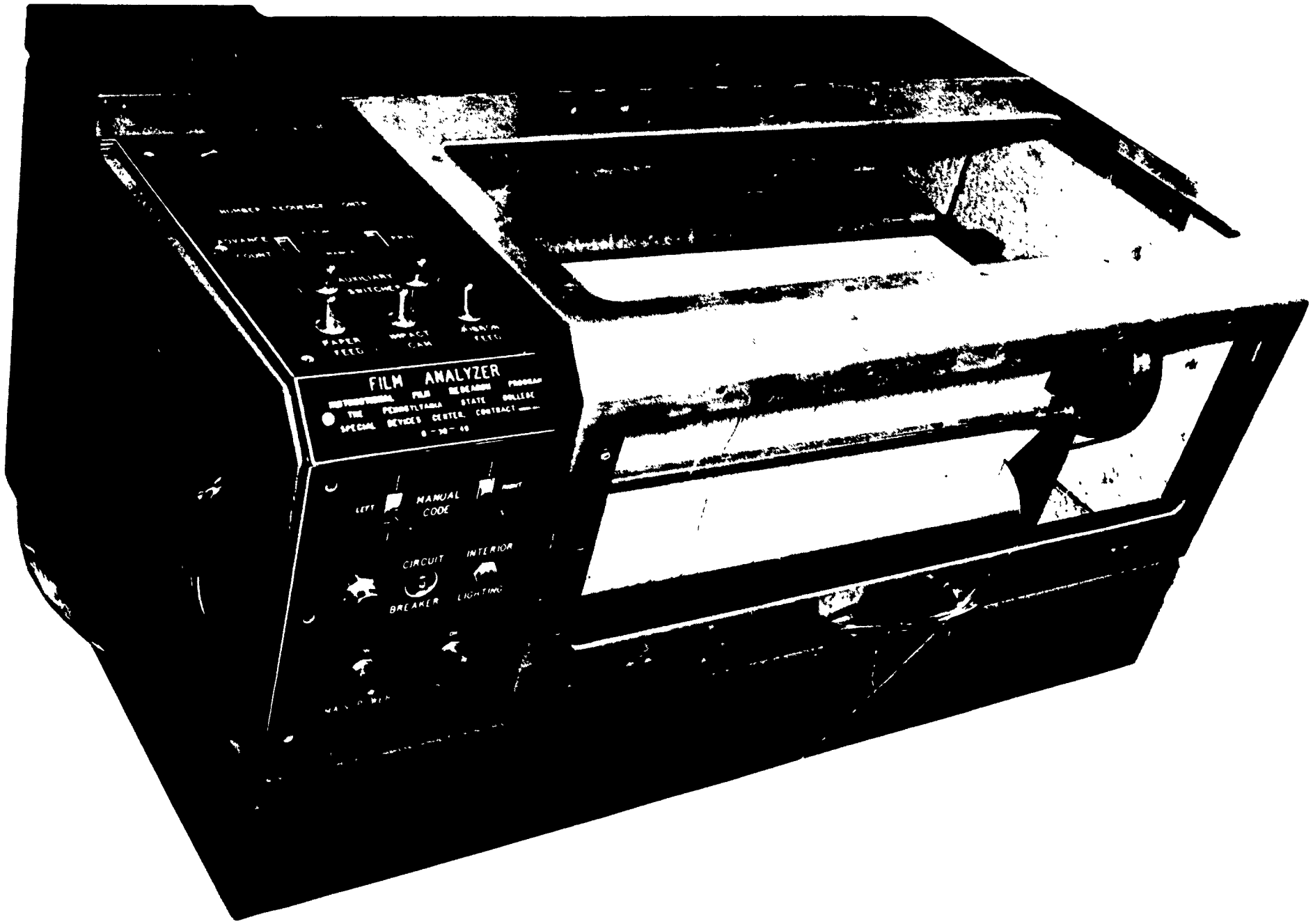

Fig 4 Film Analyzer Polygraph Printer; note code symbols printed on the chart

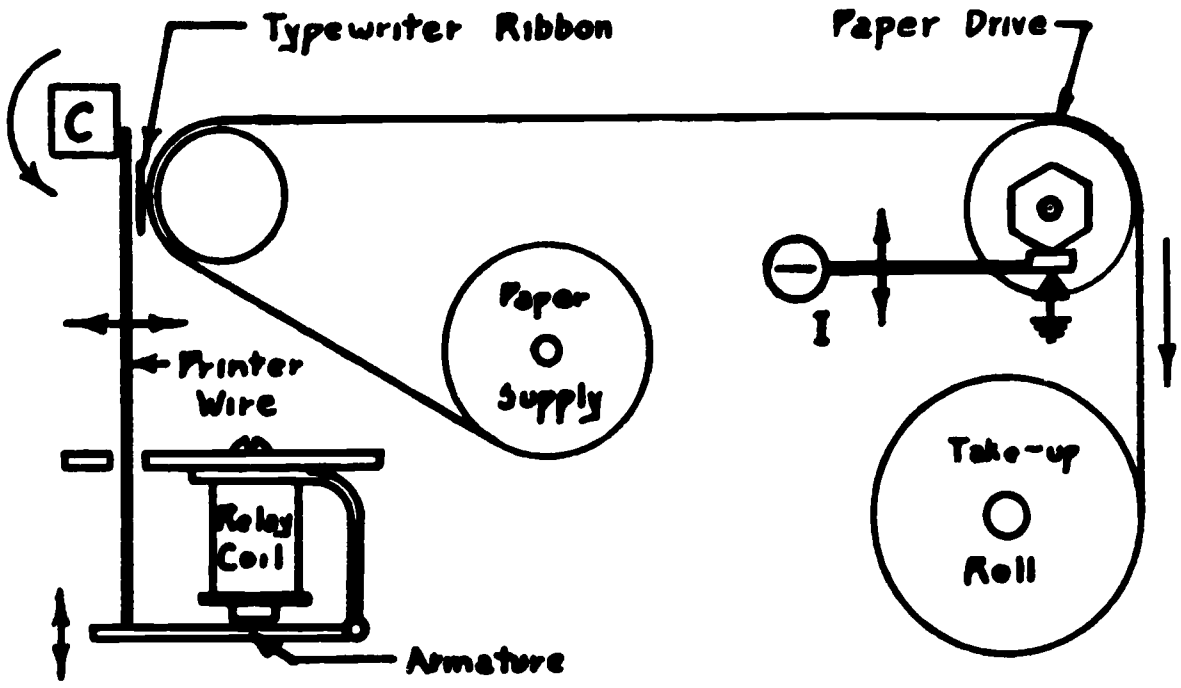

Fig. 5 The Printing System

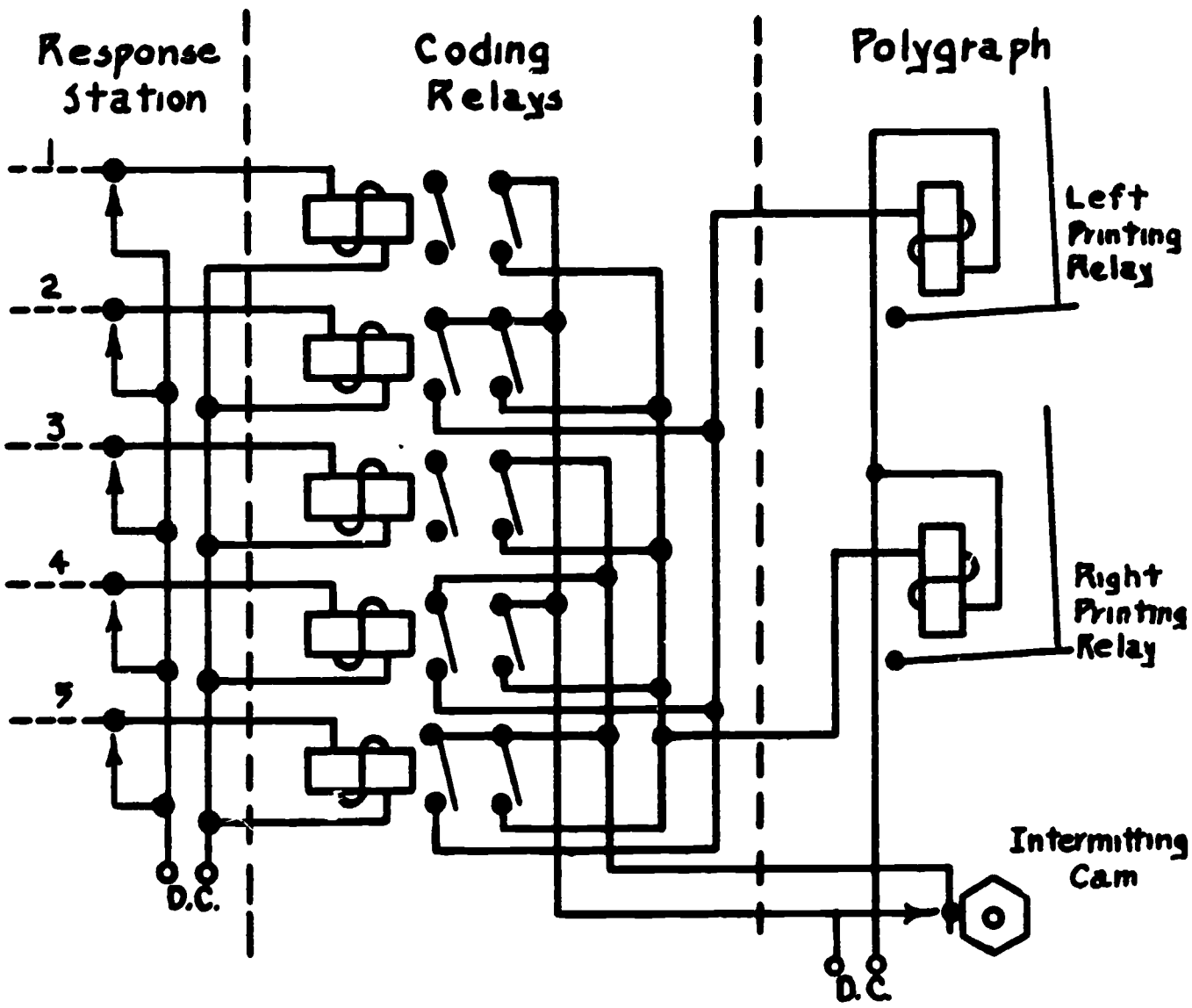

Fig 6 Wiring diagram of coding relays and corresponding response station and printer relays

A motion picture projector can be connected with the system by means of a special switch installed in the projector. By this means a record of film footage will be made on the polygraph chart as a dash on both margins of the paper for every 8 feet of film. Two more recording wires can be activated by the operator by pressing manual switches on the panel of the recorder. Other unassigned printer wires have been included to allow for additional uses which have not yet been specified. Thus, means are provided for the coded recording of several kinds of observations by the operator or investigator as the needs for these arise.

The coding relays which are located in the Classroom Communicator console control the printing on the chart. A single solid line records the response from key No. 1, two solid lines for key No. 2 and so on (Figs. 3 and 6). There are five coding relays for each response station or one for each response station key. The coding relays close the printer relays either continuously or intermittently as determined by the coding-relay circuit. The circuit shown in Fig. 6 illustrates the method of wiring.

The Response Stations

There are 40 response stations, one mounted on the arm-rest of each seat. They are covered by opaque box-like plastic shields to provide semi-privacy for each individual's responses. (Fig. 7a) These response stations were originally developed for, and are part of, the Classroom Communicator.

A response station with the cover removed is shown in Fig. 7b. There are 5 keys, numbered from left to right, one through five. The thumb falls on key No. 1, the index finger on key No. 2, etc. The keys are mechanically linked to the relays at the left. When a key is lightly pressed it springs downward until another key is pressed. The subject may determine which response he has made by means of tactile and kinesthetic cues. The subject may alter his choice at any time during a controlled response period, but only one key at a time will be recorded. It may be seen from Fig. 8 that it is impossible to have more than one key record at one time.

Fig. 8a shows the wiring plan for these response station relays. When a key is depressed, it locks down. Fig. 8b shows, for example, that when the armature of the relay No. 3 is closed by pressing the corresponding key with the middle finger, it locks down, since its coil is connected to both plus and minus. Furthermore, the positive line to relays No. 4 and No. 5 is interrupted. At the same time, the negative line to relays No. 1 and No. 2 is interrupted. In the event that one of the other relays (1, 2, 4, or 5) had been closed when this occured, it would now open as relay No. 3 is locked-in. Fig. 8b shows the circuit with No. 3 relay locked-in, and the conducting path drawn in heavy black lines.

Fig. 7a Response Station

Fig. 7b Response Station with cover removed

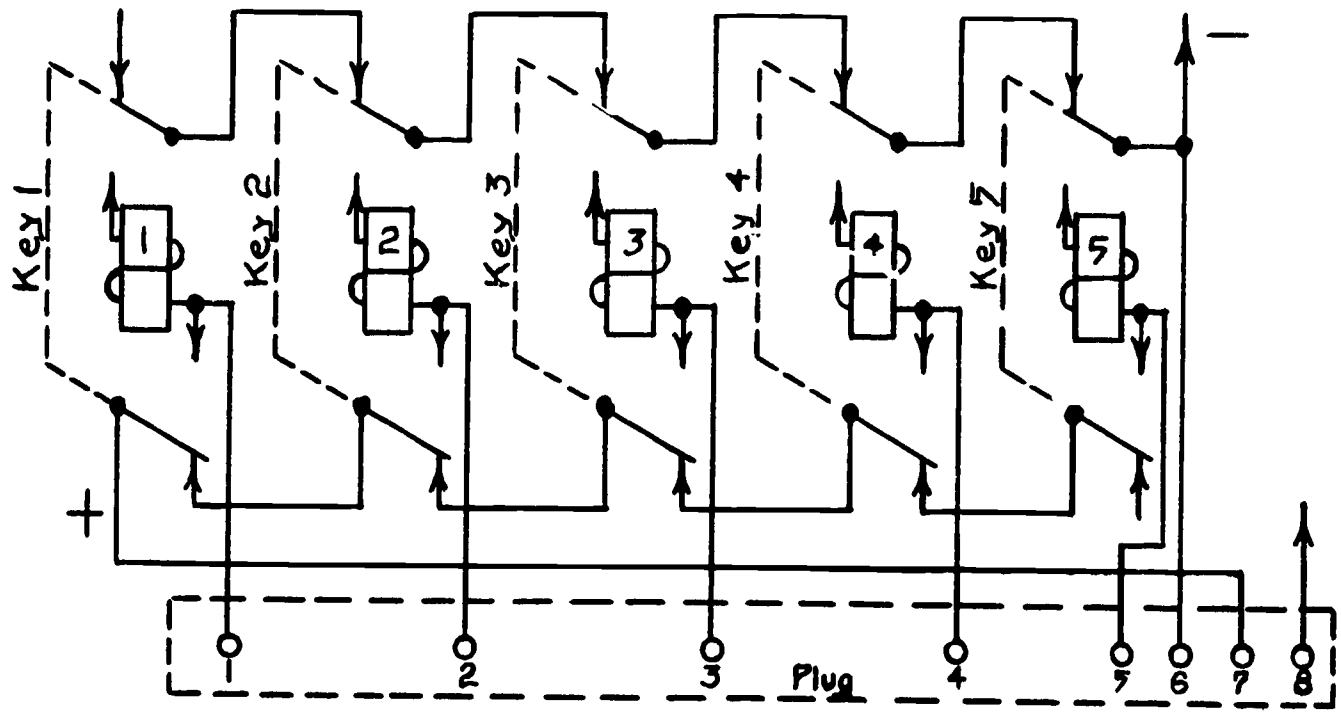

Fig. 8a Partial Wiring Diagram of Individual Response Station

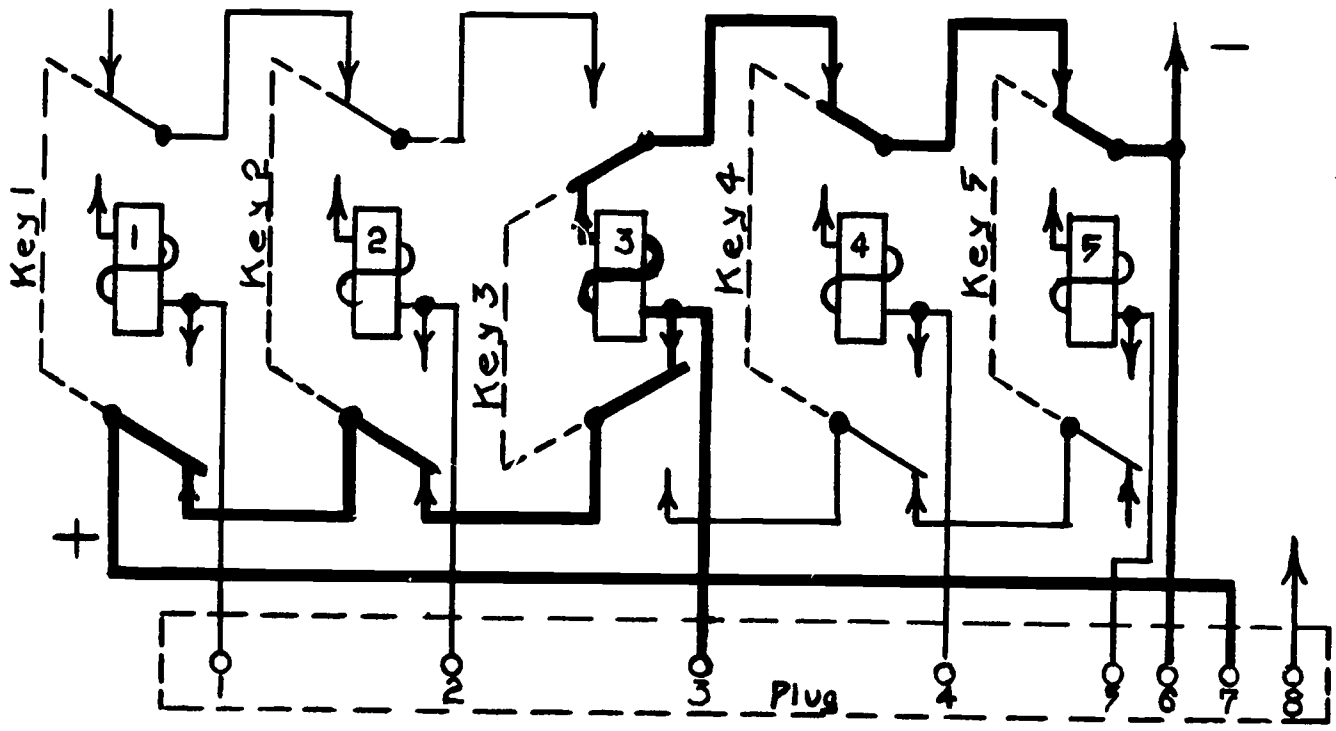

Fig. 8b Partial Wiring Diagram of Individual Response Station with key number three pressed down

The cables from the response stations plug into the back of the console of the Classroom Communicator and are connected to the coding relays. It is therefore necessary to turn on the power supply of the Classroom Communicator to activate the response stations. The Film Analyzer power supply is then turned on, and the system becomes operative.

OPERATIONAL CHARACTERISTICS

The Film Analyzer has been planned and constructed as a research tool. Although the equipment as it exists is an experimental model, it has been demonstrated to have the operational characteristics, with some modifications, which were specified during the early stages of planning. These are the following:

1. The equipment will record continuously a series of reactions or responses on a five point scale (5 keys) for each of forty individuals.

2. The response stations provide for each individual of a group of forty the means for semi-privately registering his reactions, and this can be done in a dark room with a minimum demand on attention or manual skills. Reactions such as judgments or decisions, answers to objective-type questions and voting can be carried out with little distraction of attention from the film or other kind of program material.

3. The Film Analyzer makes it possible to set limited observational tasks for sub-groups of the total group of forty observers or participants. For example, one sub-group may judge the film for technical accuracy, another for quality of photography and sound, a third for its probable teaching effectiveness with a specified audience. The reactions of each individual can be made without interfering with the program in progress. A permanent record is made of each reaction.

4. Provision is made for timing reactions by means of timer markings on the record chart. Also, film footage markings may be made. Thus, the record chart may be synchronized with the film as it is projected.

5. Extra recording channels are provided for several additional kinds of observations or records for which needs may arise.

6. As shown in Fig. 4, the record is printed on a narrow paper strip, by a dry-writing method, and the record is immediately visible.

Thus it may be said that in general the functional specifications have been met and in some instances exceeded. However, there are two main improvements which need to be made in the present prototype model of the Film Analyzer.

Even though the polygraph printer has been semi-soundproofed, the noise level is still somewhat high. Furthermore, under certain limited conditions sounds may be differentiated by people in the audience so that cues may be heard which suggest the kind of responses being made by most of the group. There are three possible solutions to this problem:

1. The polygraph printer could be operated in an adjacent room.
2. The housing of the printer could be more adequately soundproofed.
3. Improvements could be made in the printing mechanism itself.

The second improvement has to do with the response stations. These stations have rather critical adjustments. The problem results from having too much mass in the bakelite key and the lever arm assembly attached to the lock-down relays. There are two possible solutions:

1. Larger lockdown relays could be used.
2. Lighter keys could be used.

Either or both of these adjustments may solve the problem.

Testing the Operational Characteristics

Experiments have been started to test systematically the performance characteristics of the system. A number of problems have been suggested and corresponding testing procedures have been outlined. The following are representative of the questions being studied:

1. How reliable are the participants' psycho-motor reactions (i.e., can we be certain that they press the keys which they intended to press)?

2. Is it possible to rate a film continuously, or should it be rated at regular time intervals (e.g. every minute)--or at irregular "thought" or content intervals (i.e. at the end of each complete sequence)?

3. Can we expect a high correlation between the ratings of several competent judges on a given continuum, and in terms of well defined criteria?

4. Can inexperienced judges, (e.g., representatives of the trainee group for which the film was produced) effectively rate a film? Can naive subjects rate with sufficient precision to warrant the use of more than a two point rating scale?

5. Will a preliminary run of the film, before the showing in which subjects are asked to rate it, increase the reliability of ratings?

6. What preliminary instructions should be given to subjects regarding the judgments they are to make and the actual procedures of rating a film?

A series of tests has been designed to provide answers to the above questions. In fact, initial work on a testing program to provide such data is already underway. These data will, when available, help us to use the Film Analyzer to much greater advantage in the Instructional Film Research Program.

POSSIBLE USES OF THE FILM ANALYZER

The Film Analyzer was planned and built especially for use in analyzing and evaluating instructional and informational sound motion pictures and other types of instructional programs. In this connection the following uses are possibilities:

1. To assist in the evaluation of scripts. Scripts may be read or reproduced through sound recordings for evaluation by an audience comprising, for instance, representatives of the requesting agency or sponsor, writers, producers educators, psychologists, and administrators. The reactions and decisions of individuals of each of these subgroups may be recorded and summarized. These records should then serve as important guides for the final production.

2. The procedures suggested above may be used with a "story board" treatment or film strip presentation of the pictorial content of the film, with a recorded narration.

3. The Analyzer may be used appropriately by specialists to evaluate film structure, to analyze and to study motion pictures in the "rough cut" editing stages before picture and sound have been combined into a single print. Valuable data may be collected for improving the final editing or production.

4. The Analyzer would be particularly valuable for use in preview and final decision conferences which are held to determine the acceptability of the film, in terms of technical accuracy, treatment and over-all quality. Furthermore, the Analyzer would be useful in formulating recommendations for utilization of a film.

5. The Analyzer may be used for all of the above purposes with selected samples of people who represent the target audience for which the film was produced. Also, the composition of the audience may be so arranged as to include samples of the target audience along with the specialists mentioned above. The resulting records for any sub-group may be separately summarized in graphic form.

6. The Analyzer may be used to evaluate existing films.

7. The Film Analyzer may be used with other kinds of programs such as lectures, demonstrations, dramatic performances, radio, and television programs.

Other Uses. In addition to these possible uses connected with instructional and informational programs, the Film Analyzer may be used for other kinds of measures and records of the reactions of people in groups.

1. It may be used to record opinions, judgments, or wishes of individuals in groups which range in size up to a total of 40 people.

2. The Analyzer could be employed in high level decision conferences to ascertain the acceptability and degree of understanding of a plan of action, e.g., a proposed tactical strategy, policies, campaigns, and other action programs for which it is desirable or necessary to have the judgments and reactions of numbers of people.

3. The equipment would be useful in recording individual judgments or the memory of complex events. For example, the system afforts a rapid means of recording and summarizing reports of pilots after a combat mission or for the controlled interrogation of witnesses in groups.

4. By means of the Analyzer, records can be made of complex events which occur in sequence. Ninety channels are available for instantaneous recording of physical measurements. In addition, records can be made of the out-put of complex binary computors. The Film Analyzer could be adapted as a ninety-channel binary code recorder.

These are some examples of the possible uses for which the Film Analyzer may be employed. Due to its flexibility, and with the additional modifications which this model suggests, it seems likely that it can be adapted to many other purposes.