DOCUMENT RESUME

ED 024 763 08 VT 004 303

By-Hankin, Edward K.; And Others

The Development of Pre-Vocational Education Literacy Courses for Use With Computer-Assisted Instruction of Disadvantaged Youths and Adults. Final Report.

Florida State Univ., Tallahassee.

Bureau No-BR-6-1458

Pub Date Jun 67

Grant-OEG-2-6-001458-1540

Note-179p.

EDRS Price MF-$0.75 HC-$8.95

Descriptors-Arithmetic, *Computer Assisted Instruction, *Curriculum Development, *Disadvantaged Groups, Educational Objectives, *Literacy Education, Post Testing, Pretesting, *Prevocational Education, Programed Instruction, Programed Materials, Reading

The purpose of this project was to develop computer assisted courses in arithmetic and reading for disadvantaged adults and youths to serve as prerequisites to entering vocational training. Because of budgetary cuts, the project was terminated before its completion. Lessons in counting, addition, and subtraction were written and tested; however, lessons in division and multiplication were initiated but not completed. A lesson includes a pre-test to determine if a student needs instruction, two instructional units of differing focus, and a post-test to evaluate the effects of instruction. The pilot tests showed the arithmetic lessons to be effective. All of the grade two (24 lessons) of the reading program with slides was completed and entered into the computer. Lessons for grade three were ready for entry and lessons for grades four, five, and six had been written but slides had not been developed. Audio tapes are optional. The findings showed that, in general, computer assisted instruction can be used in pre-vocational literacy training for disadvantaged youths and adults; however, it was recommended that further research be conducted to determine the effectiveness of this technique. (CH)

FINAL REPORT
Project No. 6-1458
Grant No. OEG2-6-001458-1540

THE DEVELOPMENT OF PRE-VOCATIONAL EDUCATION LITERACY COURSES FOR USE WITH COMPUTER-ASSISTED INSTRUCTION OF DISADVANTAGED YOUTHS AND ADULTS

June 1967

U.S. DEPARTMENT OF
HEALTH, EDUCATION, AND WELFARE

Office of Education
Bureau of Research

THE DEVELOPMENT OF PRE-VOCATIONAL EDUCATION LITERACY COURSES FOR USE WITH COMPUTER-ASSISTED INSTRUCTION OF DISADVANTAGED YOUTHS AND ADULTS

Project No. 6-1458
Grant No. OEG2-6-001458-1540

Investigators

Dr. Edward K. Hankin
Dr. Edwin H. Smith
Dr. Timothy A. Smith

June 1967

The research reported herein was performed pursuant to a grant with the Office of Education, U. S. Department of Health, Education and Welfare. Contractors undertaking such projects under Government sponsorship are encouraged to express freely their professional judgment in the conduct of the project. Points of view or opinions stated do not, therefore, necessarily represent official Office of Education position or policy.

Florida State University
Tallahassee, Florida

ACKNOWLEDGEMENTS

Many people have helped in the progress of this project and the three directors thank them all. Dr. Thomas Jackson of Florida A & M University generously let us recruit some of his students to test the program as did Mr. Anderson, the principal of Lake McBride School. Mrs. Johnson and Mrs. Griffin, guidance counselors at Lincoln and Florida A & M High Schools, were of special help in securing the services of disadvantaged youths for this project. Mrs. Bruton and Mrs. Peebles of Griffin High also gave generously of their time in helping us secure students.

There is no way that the directors can adequately commend the project staff for their work. They were:

Faculty Participant

Dr. Myles H. Ritchie

Chief Writers

Carol Geeslin, Reading
Carl Neil Shaw, Arithmetic

Arithmetic Writer

Elizabeth A. Franks

Arithmetic Graduate Students

Robert Lushene
Theodore Wilson

Vocational Educator

Amos Rivell

Reading Writers

Doris Alston
Robert Ellis

Reading Graduate Students

Mary Bradtmueller
Richard Erdley
George Huntley
Jane Rivell
William Wooley
Elizabeth Zemmels

Without the dedicated and intelligent work of these people there would be nothing to report.

TABLE OF CONTENTS

CHAPTER I

INTRODUCTION

This report covers the first year's work of a proposed two year project to develop a computer-assisted instruction (CAI) program to teach basic arithmetic and reading. The program was intended for disadvantaged youths and adults and was designed to prepare them for vocational training. Because of budgetary cuts at the national level, the second year of development has been delayed and perhaps permanently lost.

It is the aim of this document to summarize the work that has been accomplished thus far in the hope that those trying similar projects can gain some advantage from the achievements, mistakes, difficulties, and solutions to common problems of the first year of this project. Perhaps parts of the developed program can be tried out by other educators, completed and improved, and in this way reach full development. In all, it is the fervent wish of the authors that somehow, someway, the work done on this project will have some lasting value.

A. Literacy Education: The effectiveness of vocational education is highly dependent upon minimum levels of ability in arithmetic and reading. These abilities are needed both for securing employment and for success on the job. Many persons now attending school are approaching the time when they will enter the labor market. Some are so deficient in the basic literacy skills that they can not profit from the opportunities otherwise open to them for vocational training. Others have completed or left school with academic handicaps which prevent them from succeeding in vocational education programs. If these people are to develop essential vocational competency, these handicaps must be overcome.

Most agencies and institutions concerned with the provision and improvement of vocational education see the educational deficiencies of many of the disadvantaged as a problem of urgent importance. A recent publication of the Florida State Department of Education, pertaining to special vocational programs for

the disadvantaged, identified low-level reading ability and limited formal vocabulary as two of the limitations which must be coped with (10). A March, 1965 report of the U.S. Secretary of Labor states, "Without a command of the three R's, unemployed workers simply can not compete even for the unskilled jobs in today's technical world. Worse, they can not even gain access to the formal training through which skills for employment can be acquired" (46). A similar report in 1963 stated, "Perhaps most disadvantaged are workers who are illiterate or semi-illiterate. Workers in this category are unable to cope with the manuals and instructions accompanying modern machines and industrial operations; they can not fill out bills, receipts and other forms. More than one-third of all unemployed persons never pass beyond the eighth grade. Such individuals are often the most difficult to equip with the appropriate skills in a systematic course of instruction. They often require courses especially tailored to their learning ability and habits, special methods of testing and selecting for training, and especially intensive efforts to gain acceptance by potential employers" (47). A similar 1964 report states, ". . . when available job opportunities were identified and necessary occupational training programs devised, the vast majority of the hardcore unemployed could not meet the requirements for the entrance into these programs. Large numbers were unable to read or write or to perform simple arithmetic computations . . . as a result, only one in eight of the unemployed screened for training have qualified. In one community 60 per cent of the unemployed could not qualify for projected training courses because of inadequate basic educational attainment" (48).

A November, 1963 report on the training of disadvantaged groups states, "One of the contributing factors to the intractable nature of our unemployment problems in the nation is the limited educational background of many of the unemployed. These are more numerous than might be supposed. More than 300,000 persons with less than a fifth grade education are today in the ranks of the unemployed, and 20 per cent of all unemployed have completed fewer than eight years of school . . . Under-educated unemployed had difficulty not only in finding new jobs, but also in qualifying for entry into training courses . . . Only 3 per cent of the Manpower Development Training Act trainees have been drawn from this group" (49).

A 1964 report from the United States Office of Education states that, "Successful retraining programs must take cognizance of the levels of competence in basic language and number skills of many prospective trainees. Although persons with a low level of basic skills do not constitute a large part of the total, of the four and one half million unemployed persons in the nation, about three million have not even completed elementary school. Workers of the low levels of basic skills fall into three basic categories. There are those who have never been to school or who have completed fewer than three grades; these persons are classified as illiterates. There are also persons who can be termed 'industrial illiterates' who have finished more than three but fewer than seven years of school. These persons will not find a place in the technological society of today. And there is still another group of workers, heretofore, largely unnoticed, but who must be increasingly reckoned with in the future--those who have high levels of schooling but who, nevertheless, lack competence both in technical and literacy skills . . ." (50). This same report also states, "A very important problem which should be examined further is the necessity of combining vocational training with literacy training to achieve solid employability . . ." (50).

Literacy education for native born adults has taken many forms such as the following: night classes (39), opportunity schools (17), residence camps (33), armed service classes (24), and television (3). All forms have been reported as being successful although an intensive study of the holding and teaching power of the T.V. program Operation Alphabet indicates that few illiterates completed the course and even fewer attained the stated objectives of the course (6).

The literature of the field contains many reports of successful methods of teaching, but most programs are designed to take the adult to a fourth grade reading level, although research indicates that those who can not read at the grade five level tend to lose the ability gained within a few years (18). Also, the superiority of a given method over all other methods has not been demonstrated (19). The reports of the time it takes to move an adult a year in communication skills vary, but one widely accepted estimate is about 65-70 hours (31).

B. Programming: Programmed instruction shows promise as an aid in teaching arithmetic and reading skills, but the poverty of research has left us with most questions unanswered (45).

The use of programmed materials for machine teaching in other areas has been widely investigated. The reports indicate that some machines speed up the teaching-learning process by supplying the information to be learned at a rate in accord with the student's learning speed. Through the use of branching, the student is kept at his optimal instructional level. Research on the teaching of stenowriting, German, and statistics has been conducted at the IBM Research Center using an IBM 650 computer in combination with a typewriter inquiry station. Compared with regular classroom instruction, from one-half to one-fifth of the instructional time was required (27). Therefore, Computer-Assisted Instruction looks like a time-saving approach to literacy education.

Briggs and Angell (5), and May (28,29) suggest that computer-based instruction holds the greatest promise of any programmed instructional technique for the teaching of mathematics. Schurdak (37) suggests the following applications of the computer to education: (a) it can be used as a device for achieving individualization of instruction based on each student's actual performance; (b) it can be used as a device for providing immediate knowledge of the correctness, partial correctness or incorrectness of responses to each student; (c) it can be used as a device for identifying erroneous conceptions, and preventing new material from being presented until the student demonstrates a thorough and accurate understanding of his present material.

Redbird (35) reports that children using individualized arithmetic instruction learned the material better than children that were taught by group instruction. The Redbird study pointed out the difficulty in providing the right instruction at the proper time for each student. A computer could alleviate some of this difficulty because it can record the student's progress, maintain the student in his proper position, and provide branching to instructions according to each individual's needs. Redbird discontinued the individualized instruction during the second half of the school year because of the difficulty in providing the students with the

right instructions. Fincher and Fillmer (13) report that the teaching of addition and subtraction of fractions by programmed instruction was more effective than the conventional classroom approach. Working with school children, Gagne (14) and Higgins and Rusch (23) find programmed instruction of mathematics to be more successful than classroom or other instructional techniques. Heimer (22) also finds that programmed instruction was superior in teaching algebra to older students. Suppes, Jerman and Groen (41) report the activities of providing a daily linear mathematics program that reviews and teaches basic arithmetic facts to 41 fourth-grade children. Using simple procedures that involve indicating incorrect items immediately, the children showed progressive improvement in performing a series of arithmetic operations.

Although little emphasis has been placed on computer-assisted mathematics instruction with less "gifted" individuals, it seems logical to assume that disadvantaged youths and adults as well as bright children may benefit from computer-assisted instruction in arithmetic.

Attempts to teach beginners to read via programmed methods are burgeoning. One recent attempt at programmed reading instruction is that of Middlemas, Feld and Ragger (30). This is published and distributed by the Center for Programmed Instruction. This program has not yet been refined to the point where it can be recommended.

Goss describes the achievement of four first grade classes using the Sullivan Associated Program (16). Their achievement was significantly higher than that of the control group. As a matter of fact, the mean score in reading achievement for classes using Programmed Reading was higher than the mean of any class (in the State of California) taught with the state adopted reading textbooks.

Another study of automated instruction in reading is that of Noall (32). She devised new techniques for high school students and found that gains, although slightly favoring the self-directed program, were not statistically significant. The fact that less teacher time was involved could be presented as an advantage.

Raygor (34) has been attempting behavioral analysis in reading with adults at the University of Minnesota. He finds that specific responses to scheduled reinforcement ratios can be predicted when reading material is used as a reinforcement. He has also found that signal lights can produce marked changes in rate of reading for students. Such mechanically programmed techniques need further exploration. With computer-assisted instruction, ideal programs in terms of size, reinforcement scheduling, and branching can be developed.

Atkinson and Hansen (2) describe the development of a reading curriculum for a computer-assisted instructional system which is now being tested in Project Brentwood. In this project 120 children are to be given daily instruction in initial reading. Important information is expected to be obtained about the laws of learning.

Green (20) reports preliminary studies of initial reading instruction for disadvantaged preschool children. In these studies he used an IBM 1440 computer system with typewriter terminal. His work to date indicates that boys respond more frequently and more efficiently (in terms of information obtained per machine response) and learn the keys more rapidly than girls. No child has yet refused to take his turn at the terminal although some stay only a minute or two. Interest on the part of all participants has been high.

C. Objectives: The major objective of this project was to devise and pretest a computer-assisted instruction program for teaching pre-vocational literacy skills to functionally illiterate adolescents and adults. The program was to be designed for use by a vocational education instructor. All lessons were not to be self-sustaining. Rather, some were to enhance and accelerate on-going individual instruction. At least two different ways of teaching a particular topic were to be tried. One of the ways was to make heavy use of audio-visual aids, and one way was to use as few audiovisual aids as possible. This was to be done in order to answer the question of whether the additional expense of audiovisual aids could be justified.

A second objective was to test the program's efficiency through experimental comparison to a traditional adult literacy program. A comparison of the cost of the two methods of instruction was to have been made.

CHAPTER II

METHOD

A. Apparatus. The instructional system used in this study was an IBM 1440 Data Processing System. It was housed in the Computer-Assisted Instruction Center under the direction of Dr. Duncan Hansen. It consisted of a central processing or computing unit, disk storage units, a transmission control unit, and from five to seven student/author stations or terminals.

The central processing unit was programmed to keep track of a student's position in the course, to compare the student's answer with the correct answer and with possible wrong answers to a question, and to coordinate the student's entries with the course material.

The disk storage units stored the course and student and author records. The time necessary to retrieve the material from storage was in terms of thousandths of a second. Recordings of student responses were kept on magnetic tape.

The transmission control unit coordinated communications between the student/author stations and the rest of the computer system.

Five student/author stations or terminals consisted basically of a typewriter. All of the components of the station were completely controlled by the computer. The typewriter was used to type out questions, explanations, or instructions to the student, and to serve as the input device for the student's asnwers. It also served the author as an input device to get the program into the system originally and to modify it when necessary. The system checked the student's response and if it was correct, could give him immediate verbal reinforcement. If the response was incorrect the system could automatically present hints or partial answers, complete answers, more drills, or the next question. By using the branching capabilities of the system, the course was structured so that the student saw only that material which he required. The instruction produced was therefore individual and adaptive to each student taking the course.

At first one and then eventually two terminals were equipped with audiovisual capabilities; that is, the computer controlled a Carousel slide projector and a tape recorder and could randomly present one of 80 slides and any selection from 30 minutes of recorded material.

B. The Arithmetic Program. The arithmetic program was developed under the direct supervision of Dr. Timothy A. Smith of the Psychology Department of Florida State University.

The arithmetic program as tailored for disadvantaged youths and adults had several features. First, since most of the students for whom the program was intended had some schooling, they had mastered some of the topics to be taught. Thus a program aimed at this group was divided into lessons with pretests so that it could be determined if a student had mastered the material covered in the lesson and did not need that kind of instruction. Pretests would not be necessary in a program intended for children since at the first grade level they would know little and need instruction in almost everything. Later grade levels could assume that topics covered in lower grades had been mastered and that all students were completely ignorant of the new material. Adults and disadvantaged youths, on the other hand, typically have an uneven mastery of arithmetic and need selective instruction. The ability to branch around lessons aimed at shaping behaviors already in a student's repertoire cuts the cost of instruction drastically by reducing student and computer time necessary to complete instruction.

Second, the grouping of the ideas and problems of arithmetic into lessons was done in a way optimal for adults. Because of their previous schooling, much of the arithmetic work done in this project with youths and adults was in reality remedial instruction. They needed certain skills sharpened or a few concepts re-explained, and the organization of instruction intended for children or other completely ignorant students was not appropriate. The initial organization of the program into lessons was based on a task analysis, but eventually its re-organization was the result of the behaviors of the students themselves. In the Results section of this report are described the methods used to obtain an empirically derived organization of arithmetic instruction for disadvantaged youths and adults.

Third, several different types of instruction were developed for each lesson. Some youths and adults needed only a brief unit with little detail to restore a skill they had lost. Others needed a step by step presentation of an operation or concept not mastered previously. No more time was taken for instruction than was necessary. Because of the diversity of experience in arithmetic of a group of youths and adults, a program intended for them had to be diverse.

1. Behavioral Objectives. The general purpose of the arithmetic program was to develop basic numerical skills. By this was meant those skills assumed to be present by vocational mathematics textbooks. No attempt was to be made to cover carpentry, shop, or other vocational math, but the foundation for these subjects was to be built. Among the topics to be treated were:

a. Reading and Writing Numbers
b. Counting
c. Addition
d. Subtraction
e. Multiplication
f. Division
g. Fractions: addition, subtraction multiplication, division, reduction, decimals, and percentages.
h. Word Problems

The program was to be designed to start at the first topic, Reading and Writing Numbers, and to treat each topic successively. The problems were to be written in concrete, practical terminology. Subjects were to be practiced on a particular skill until they showed mastery of it by working correctly a variety of problems. In all cases performance rather than a verbal statement was to indicate mastery of a concept.

The operational goal set for the arithmetic program was for all students to score 90 per cent or better on tests consisting of representative and inclusive samples of problems for a particular topic. If a student did not achieve this score on a particular lesson pretest, the aim of the instructional unit was to enable him to do so on a lesson posttest.

A student was required to achieve at least 90 per cent mastery of a particular lesson's operation before being allowed to take the next lesson. The reason for this was that frequently in arithmetic less complex operations are included in more complex ones. For instance, in adding 3-digit numbers, one must perform, among other things, at least six independent additions of single digits. If the probability of doing these simple additions correctly is only .7, the probability of doing the larger problem correctly can not exceed (.7)(.7)(.7)(.7)(.7)(.7) = .118. Thus, a highly reliable performance of simpler arithmetic operations is typically required before more complex skills can be developed to an acceptable level.

2. Organization. The arithmetic program as completed at the end of the first year of the project consisted of five sections. These were Counting, Addition, Subtraction, Multiplication, and Division. Each section was broken down into a number of lessons which consisted of a test or tests of the behavioral objectives of the lesson plus one or more instructional units. Table 1 presents the organization scheme of the parts of the projected program that have been written. The lesson number indicates the order in which they are intended to be taken by students. All of the material indicated by an "X" has been written, entered into the computer, debugged by the project staff, and used with actual students. Materials indicated by an "O," along with lessons for those additional topics which are part of the behavioral objectives of the arithmetic program but not mentioned in Table 1, have not been developed, but in most cases have been planned.

3. Tests. All students began each lesson by taking a test on the behavioral objectives. A test was distinguished from an instructional unit by two characteristics. First, feedback was given on the first three items of a test to insure that a student understood the test's directions. No feedback was given on the remaining items of a test, but feedback was given after every problem or question in an instructional unit. Second, students were given only one chance to answer a test question, and after they had responded were branched immediately to the next question regardless of whether they were right or wrong. In instruction a student was never branched to the next question until he had answered the item in front of him correctly. This meant that usually he was given the correct answer after two or three wrong responses.

TABLE 1

THE ARITHMETIC PROGRAM

Section	Lesson Number	Name	Number of Test Items	Test a	Test b	Instructional Units 1	Instructional Units 2
Counting	1	Digit recognition	19 (10 & 9)	X	0	Small digit	Large digit
	2	Counting	19 (10 & 9)	X	0	Small digit	Large digit
	3	Generalized counting	19 (10 & 9)	X	0	Geometric patterns	Row/column patterns
Addition	4	Simple facts	20 (10 & 10)	X	0	Small sums	Large sums
	5	Large problems	20 (10 & 10)	X	X	Verbal	Drill & practice
	6	Carry once	20 (10 & 10)	X	X	Verbal	Drill & practice
	7	Multiple carry	20 (10 & 10)	X	X	Verbal	Drill & practice
Subtraction	8	Simple facts	20 (10 & 10)	X	0	Drill with zero	Drill without zero
	8.5	Teens	10	X	X	None	Drill & practice
	9	Large problems	20 (10 & 10)	X	X	Verbal	Drill & practice
	10	Borrow once	20 (10 & 10)	X	X	Verbal	Drill & practice
	11	Multiple borrow	20 (10 & 10)	X	X	Verbal	Drill & practice
Multiplication	12	Small	20	X	0	None	None
	13	Large	36	X	0	None	None
Division	14	Small	20	X	0	None	None
	15	Large	45	X	0	None	None

For six of the arithmetic lessons developed so far, two parallel versions (a and b) of the behavioral objective test have been developed. This was done to enable re-testing of a student following instruction with problems he had not been previously exposed to, so that an unbiased estimate of the instructional unit's effectiveness could be made.

The tests for Counting, Addition, and Subtraction were divided into two parts by branches after the first ten problems. If a student performed perfectly on the first ten problems, he was branched to the next lesson. If he had missed one-half or more of the problems, he was branched to instruction. If neither branch was made the student took the remaining problems on the test. At the end of part two of a test a student's performance was again assessed. If he had not missed any of the problems on the last part of the test, he was branched to the next lesson. He also was branched to the next lesson if he had not missed a total of more than two problems on both parts of the test. Otherwise, he was sent to the appropriate instructional unit.

4. Instructional Units. Instructional units for the Counting section of the program and Lessons 4 and 8, Simple Addition Facts and Simple Subtraction Facts, were aimed at the type of problem missed by the student. In Lesson 1 the student was required to respond to various numerals by striking the "1" key a proper number of times; for example, if the question was "6," the correct answer was "111111." Small Digit instruction covered the digits zero to nine, Large Digit instruction, the numbers ten to eighteen. Students were branched to a unit or units depending on the type of test problems they missed. In the first part of Small Digit instruction, the student was taught to match the number of "1"s presented by the computer, for example, if the question was "1111," the answer was "1111." In the second part of Small Digit instruction the correct numeral was printed next to the proper group, and the student was required to respond as in part one. Large Digit instruction had instructional items identical in form to those of Test 1 with the exception of telling the student if he was correct or not, giving him hints, and finally giving him the correct answer.

The task in Lesson 2 was the reverse of that in Lesson 1. The student was presented with a certain number of "1"s horizontally by the computer. He was required to count the number

of "1"s and to respond by striking the key or combination of keys which printed the correct number. Small Digit instruction practiced a student in the groups zero to nine, Large Digit instruction covered the groups ten to nineteen. Instructional frames were items just as in Test 2, but the student was given feedback.

Lesson 3, Generalized Counting, differed from Lessons 1 and 2 in that the stimuli were letters arranged in various rows (P X Q U S), columns (A) and geometrical patterns (X).

```
                V                    P 0
                                      R ZA
```

The student was required to count the number of letters in each item and to respond by striking the correct key or keys. The instructional unit, Row/Column Patterns, practiced with feedback a student on items arranged in rows and columns, while Geometric Patterns was a practice unit containing geometrically arranged items.

In Lesson 4 the student was required to compute answers to 1-digit addition problems (7+5) and to respond by striking the appropriate keys.* Instructional units were Small Sums, which included items with answers less than ten, and Large Sums, which contained practice items with answers equal to or greater than ten. Items were drawn from the population of problems with characteristics the same as those used in the test, but students were told if they were correct and could attempt a problem a second time.

Test 8 required the student to compute answers to 1-digit subtraction problems (5-3) presented vertically and to respond by striking the appropriate keys. Eight of the problems contained zero in either the problem or answer. Instructional units included Drill without Zero, consisting of problems which did not contain zero, and Drill with Zero, a unit with only problems containing zero. Instruction format was similar to that of Lesson 4.

For the remaining addition and subtraction lessons, two parallel instructional units were developed. Each was intended

---

*Problems were presented to the student vertically, as they were in all other addition, subtraction, multiplication, and division lessons.

to be complete in itself, and pilot comparisons of the two units were made in order to determine which method of instruction was most effective for which types of students (see Results). The Drill and Practice units consisted of 20 problems of the same form as those in the corresponding tests. If a student answered the problem presented correctly, the computer typed "RIGHT!!" and branched to the next problem. After the initial incorrect answer, "WRONG" was typed in red with an appropriate comment, "Did you forget to carry?" or "Check your work carefully and try again," and a student was given another chance to work the problem. Usually after a second mistake, "Wrong" was again typed in red and the correct answer was given along with the phrase "Try again." But in some Drill and Practice units the correct answer was not given to the student until he had made three attempts at working the problem himself. The computer would not go on to the next problem until the student entered the correct answer.

The Addition section of the program was finally organized into four lessons (see Results). Lesson 4 has been described above. Lessons 5, 6, and 7 all contained problems which had up to five digits in each addend. Problems were presented vertically. A maximum of four rows of addends were used. The lessons differed in that Lesson 5 treated problems in which no carrying was involved, Lesson 6, problems which involved only one carry, and Lesson 7, problems with two or three carry operations.

The Verbal instructional units for these lessons had a student work 20 problems, giving him detailed feedback when he made an error. For instance, in doing the problem 34+7, if the student answered "14" he was told, "You typed the answer backwards. Try again." If the student answered 4 plus any digit but 1, e.g., 43, he was told, "You forgot that 4+7=11. Try again." If the student entered a wrong digit with 1, e.g., 31, he was told, "Did you forget to carry? Try again." If a student entered none of the previous answers and his answer was less than 25, he was told, "Your answer is much too small. Did you make a typing error? Try again." If a student's answer exceeded 60, he was told, "Your answer is much too large. Did you make a typing error? Try again." If none of the above conditions held, he was told simply "Wrong. Try again." In order to make such precise comments on a student's response possible, problems had to have no more than two digits in each addend. Thus, they were not of the exact form of those in the corresponding tests.

The Subtraction section of the program eventually was divided into five lessons (see Results). After Lesson 8, Simple Facts, Lesson 8.5, Teens, covered the subtraction of a single digit number from the numbers 10 through 19, for example; 16-9. This had to be mastered in order to do problems requiring borrowing. Lessons 9, 10, and 11 treated larger problems with a maximum of five digits in the minuend and five digits in the subtrahend. The problems were presented vertically. In Lesson 9 none of the problems required borrowing, in Lesson 10 all of the problems required the student to borrow once in solving them, and in Lesson 11 all problems required the process of borrowing more than once in their solution.

The Verbal instruction for subtraction consisted of lengthy explanations of the proper procedures for each of the types of problems. They resembled the usual "book" explanation of how to do a certain operation, with worked examples. They differed from a book explanation in that the student was required to respond after a few sentences of instruction in order to show that he had understood the material, and if he had not understood, a further explanation was given to him. Interspersed in the lengthy explanations were two sets of five problems each for subjects to work with feedback. An example of this type of instruction is presented in Appendix A.

For the Multiplication and Division sections of the program (Lessons 12-15), only preliminary versions of the tests for the behavioral objectives of these sections have been entered into the computer and debugged. Both sections have been divided provisionally into two lessons, one dealing with simple facts or small problems, another with more complicated operations or large problems. Behavior of students on the problems has been observed and statistical analyses done to indicate how these sections should be divided into lessons and sequenced (see Results). Preliminary plans for the instructional units have been made.

5. Lesson 10. Figure 1 indicates the course of a student through a sample of the program, Lesson 10. A copy of this lesson is presented in Appendix A. Initially the student answers the first ten items of Test 10. From there he may go to one of three places. If he has gotten all of the ten items correct, counter one (c1) will have ten in it, and the student will be branched to Lesson 11. If he has answered between six and nine items correctly ($6 \leq c1 \leq 9$), he is branched

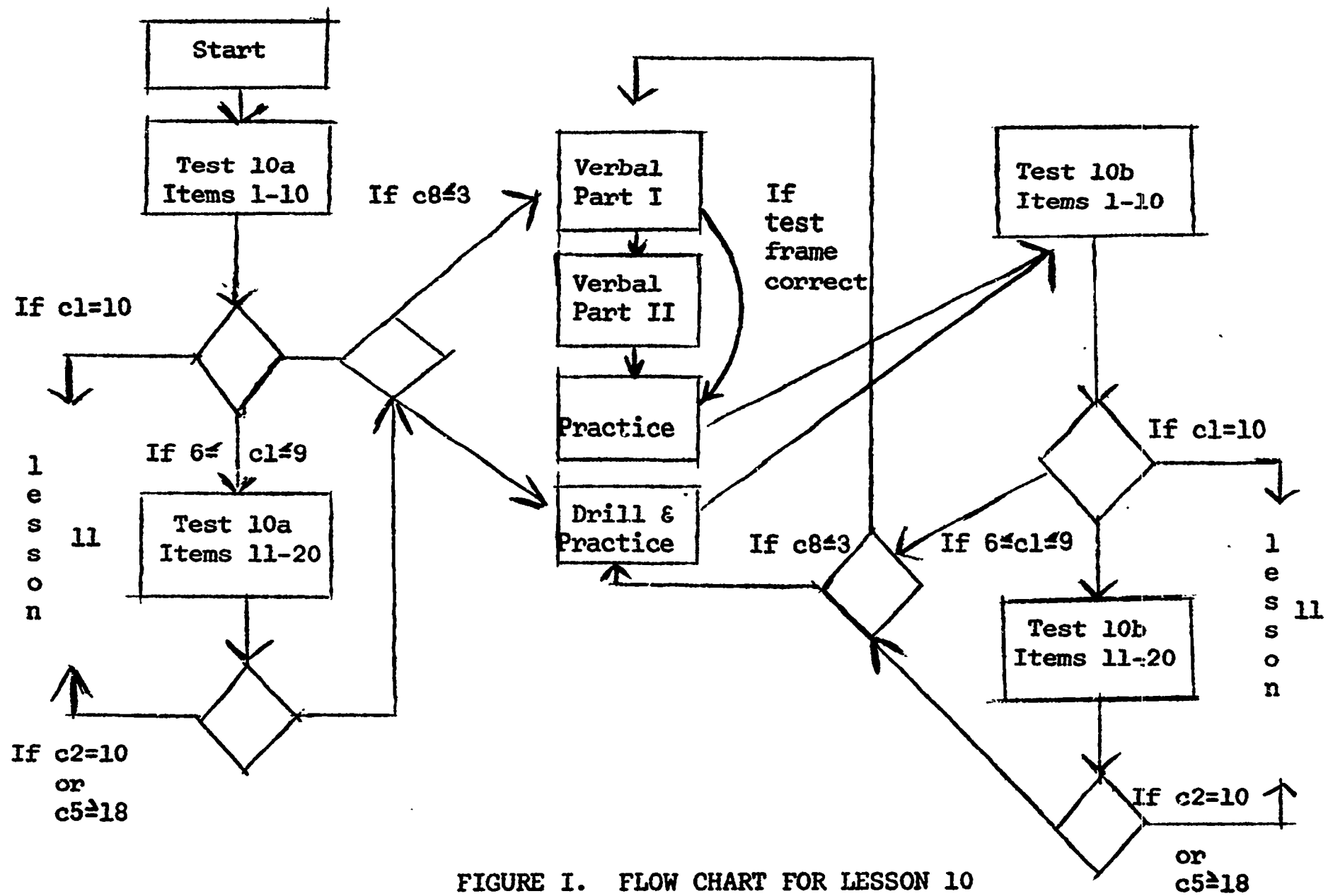

FIGURE I. FLOW CHART FOR LESSON 10

to the second ten items of Test 10a. If he has failed to answer more than 50 per cent of the initial test items correctly, he is sent directly to instruction, saving testing time.

A student who is sent to the last ten items of Test 10a goes one of three directions on completing the items. If he gets all ten of these items correct, or at least eighteen of the total of twenty items on Test 10a correct, he is branched to Lesson 11 (c2=10 or c5≥18). If he is not branched to Lesson 11, he goes to either Verbal instruction or Drill and Practice, depending on where the proctor assigned him.

In this lesson, as in several others, two instructional units are available. These units are designated as Verbal and Drill and Practice. The branching to one or the other forms of instruction is programmed so that it is handled by the computer. At the beginning of the program, students are designated as Verbal or Drill and Practice and a code for the instructional mode entered from the terminal. This code causes a value to be added to counter eight (c8). Throughout the rest of the program, as in Lesson 10, the order of branching is (1) next lesson (2) the remaining problems in the diagnostic test (3) one of the instructional sections. If a subject does not go to more diagnostic items, he is automatically branched to the appropriate mode of instruction. The branch to the Verbal mode is conditional. If a student passes this point in the branching sequence, he is unconditionally branched to Drill and Practice.

When a student is branched to Verbal instruction, he receives Part I of the instruction and a test frame or item, and if he answers it correctly he is branched around Part II of the verbal explanation to practice. Otherwise the student receives more verbal instruction and practice, and then is branched to Test 10b. If a student goes to Drill and Practice, he goes straight through that unit and into the first ten items of Test 10b.

Test 10b has exactly the same format and branching contingencies as Test 10a. A lesson is set up so that a student will not leave it until he has mastered its topic. A measure of a lesson's effectiveness for a particular student is the number of times he goes through the instructional unit before he passes the lesson's test.

C. The Reading Program. The reading program was developed under the direct supervision of Dr. Edwin Smith of the Department of Elementary Education, Florida State University.

To begin the reading program, objectives were written in terms of the general behavior changes necessary for completion of each grade level. Lists of the objectives for each grade and a sample of a completed lesson are given in Appendices B and C respectively. Basal readers such as the American Book Company readers (4), the Lippincott Basal Readers (26), the Scott Foresman basal readers (36), and professional reading materials were used as sources for ideas. Using these objectives, specific skill sheets for each story-lesson were determined (see Appendix B). These skill sheets outlined in some detail the specific reading skills to be taught in each story-lesson.

Under the assumption that disadvantaged adults and youths should learn to read to learn, it was decided that the reading skills would be taught through content stories. The four content areas used were: health, work, law, and science. Using the Dolch Readability formula by Garrard Press (12) and the Lorge-Thorndike list (25), readability was determined for each story to place it at the appropriate grade level. Within a grade level, stories were arranged from lowest to highest readabilities for that level (e.g., for level two: 2.1, 2.3, 2.5, 2.7, 2.9).

In developing vocabulary for each grade level, words that were graded above the level of the story were listed. Using this list, a list of "hard words" and another list of "incidental words" were determined for each story. In teaching the "hard words," a test frame followed by several remedial frames was used; the incidental words were introduced and taught by having the student simply copy them on the typewriter. This procedure was followed for the stories on each grade level.

When vocabulary and readability for a story-lesson had been determined, the specific skills list for that story was attached. The story was then ready to be developed into a programmed lesson. Each writer worked on a separate story. His task was to develop frames around the predetermined vocabulary and skills. The writer also planned the slides for his story. When the writer finished his story-lesson, it was typed and then checked by the chief-writer and the reading director.

It was then sent back for corrections. Once corrected and rechecked, it was ready for computer input and debug.

When the writing of each grade level was completed, a revised vocabulary list, composed of all the words previously taught, was compiled and given to each writer. The list was then used in determining what words had already been taught and could therefore be assumed to be known by the students. These words were not retaught, even though they might appear in the vocabulary lists of several stories.

This procedure was followed for the story-lessons on each grade level. As each grade level was completed, one writer surveyed the stories and planned the tapes to be used.

After a story was debugged for programming errors, several writers went through it to check it for teaching errors. From their observations and corrections, the story was further debugged and made ready for the experimental running of students. When the slides were ready, students used the material in learning exercises. Their comments and any difficulties they encountered were used to further revise each story-lesson. Any major programming technique changes that were forthcoming from these trials were sent to the writers to be incorporated into the writing of future story-lessons.

Tables 2-7 list the work completed on the reading program to date. All the lessons in Grade 2 have been entered into the computer and debugged. Lessons 1-10 of Grade 3 have been punched on cards and could be quickly entered into the system.

A shortened example of the logic of a lesson is diagrammed in Figure 2. After an introduction and motivation frame (1 and 2), the student is given a test frame on the first new word (3). If the student spells the word correctly, he goes on to the next new word (4). If the student spells the word incorrectly, he is branched into remedial sequences (a to d), which teaches the word by syllables. Along with providing spelling help, the first two remedial frames (a and b) also provide a chance for the student to type the entire word correctly and go back to the main line (4). After passing the first two remedial frames, the student has no chance to get out but must complete the remedial sequence. At the end of the remedial sequence (d), the student is tested on the word again. At this time, if he is right, he goes up to the main part of the program (4).

TABLE 2

WORK COMPLETED ON THE READING PROGRAM
(GRADE 2)

Lesson and title	Story written	Frames completed	Tapes planned	Tapes made	Slides planned	Slides made
1.Laws and lights	x	x	x		x	x
2.A fine fix	x	x	x		x	x
3.Occupation I	x	x	x		x	x
4.Treasure laws	x	x	x		x	x
5.How man made paper	x	x	x		x	x
6.You can help	x	x	x		x	x
7.Barbering	x	x	x		x	x
8.Bingo and the law	x	x	x	x	x	x
9.Cells: building blocks of life	x	x	x	x	x	x
10.Your children's feet	x	x	x		x	x
11.Job benefits	x	x	x		x	x
12.Highway law I	x	x	x		x	x
13.The smallest piece	x	x	x		x	x
14.Asthma	x	x	x		x	x
15.Calling about work	x	x	x		x	x
16.Highway law II	x	x	x		x	x
17.Dirty air	x	x	x		x	x
18.(None)		x	x		x	x
19.Beauty operator	x	x	x		x	x
20.It pays to talk to others	x	x	x		x	x
21.Would you believe	x	x	x		x	x
22.Food and your weight	x	x	x		x	x
23.Employment agencies	x	x	x		x	x
24.Trip to Venus	x	x	x		x	x

TABLE 3

WORK COMPLETED ON THE READING PROGRAM
(GRADE 3)

Lesson and title	Story written	Frames completed	Tapes planned	Tapes made	Slides planned	Slides made
1.Fighting	x	x	x		x	
2.The interview	x	x	x		x	
3.Medicine can be harmful	x	x	x		x	
4.The telephone lineman	x	x	x		x	
5.Hurricanes	x	x	x		x	
6.Interest II	x	x	x		x	
7.First satellite	x	x	x		x	
8.Moonshine	x	x	x		x	
9.Fraction	x	x	x		x	
10.Job training	x	x	x		x	
11.Good posture	x	x	x		x	
12.Plan that backfired	x	x	x		x	
13.The flu	x	x	x		x	
14.Tube food	x	x	x		x	
15.Smoking	x	x	x		x	
16.Shipping and receiving clerks	x	x	x		x	

TABLE 4

WORK COMPLETED ON THE READING PROGRAM
(GRADE 4)

Lesson and title	Story written	Frames completed	Tapes planned	Tapes made	Slides planned	Slides made
1.Lightning and thunder	x	x	x		x	
2.Law about false advertising	x	x	x		x	
3.Take shelter	x	x	x		x	
4.Pasteurization of milk	x	x	x		x	
5.Time off for voting	x	x	x		x	
6.Cancer and my best friend	x	x	x		x	
7.Wanted: skilled workman	x	x	x		x	
8.Social security	x	x	x		x	
9.Rabies	x	x	x		x	
10.Filling out an application	x	x	x		x	

TABLE 5

WORK COMPLETED ON THE READING PROGRAM
(GRADE 5)

Lesson and title	Story written	Frames completed	Tapes planned	Tapes made	Slides planned	Slides made
1. The basic seven	x	x	x		x	
2. Interest II	x	x	x		x	
3. Health and pregnancy	x	x	x		x	
4. Fishing law III	x	x	x		x	
5. Heart attack	x	x	x		x	
6. Church ministry	x	x	x		x	
7. Bomb in a cage	x	x	x		x	
8. Oil	x	x	x		x	
9. Airlines in your future	x	x	x		x	
10. The mentally retarded: their new hope	x	x	x		x	

TABLE 6

WORK COMPLETED ON THE READING PROGRAM
(GRADE 6)

Lesson and title	Story written	Frames completed	Tapes planned	Tapes made	Slides planned	Slides made
1.Headache	x	x	x		x	
2.Child labor laws	x	x	x		x	
3.Double-talk	x	x	x		x	
4.Aluminum	x	x	x		x	
5.Some facts about suicide	x	x	x		x	
6.Mail fraud	x	x	x		x	
7.Just in time	x	x	x		x	
8.Home improvement	x	x	x		x	
9.Printing	x	x	x		x	
10.Part-time sales	x	x	x		x	

TABLE 7

WORK COMPLETED ON THE READING PROGRAM
(GRADE 7)

Lesson and title	Story written	Frames completed	Tapes planned	Tapes made	Slides planned	Slides made
1.Income tax	x					
2.Filling station attendant	x					
3.Job as a state trooper	x					
4.Cigarette smoking and cancer	x					
5.Steno-clerk	x					
6.What your blood does	x					
7.Alcohol and driving	x					
8.Astronauts and cosmonauts	x					
9.Marriage	x					
10.Household pests	x					

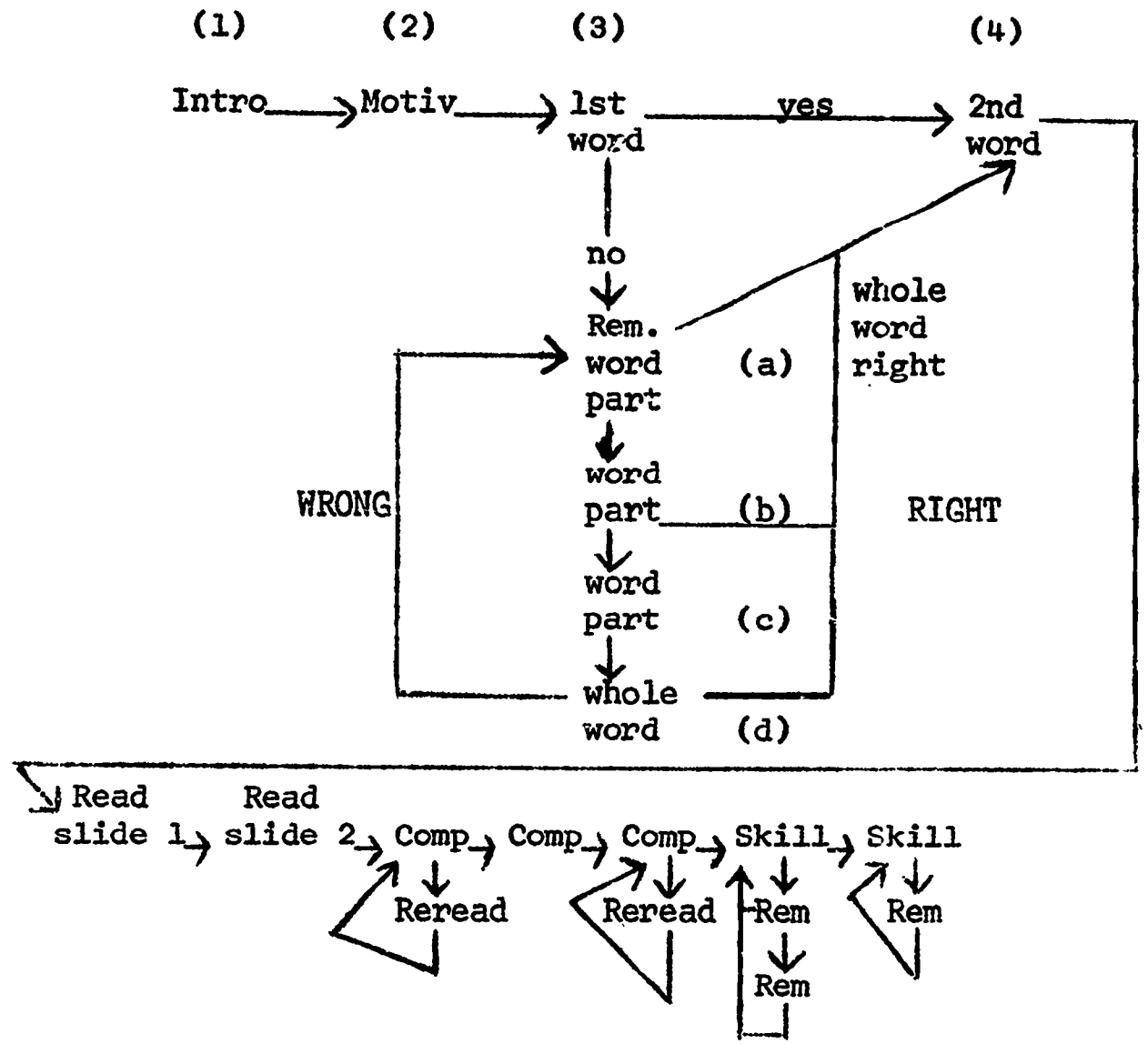

FIGURE 2. FLOW CHART SHOWING AN EXAMPLE OF VOCABULARY, COMPREHENSION, AND SKILL DEVELOPMENT

If, however, he is wrong, he goes back to the first remedial frame (a) on that word and starts again.

After two or three words have been presented, the student reads part of the story on slides. Then more new words are presented, and additional parts of the story are presented to keep motivation and interest at its highest. This procedure is continued until ten to fifteen words have been presented and all the story has been read.

When a student is finished, he is presented with comprehension questions and frames on skill development. Occasionally in these sequences a student will be branched to several remedial frames for review or help.

After the skills have been taught, the student reads all of the story again and answers one final question on the "main idea."

D. Students. After a draft of either the arithmetic or reading program was written and entered into the computer, at least four members of the project staff went through it as students in order to find any mistakes or difficulties. These people found most of the technical errors in the program.

After this initial debug, students for whom the program really was intended were run through it. They were drawn from several sources. Table 8 presents their sources and characteristics. All were residents of Northwest Florida. Thirty Negro adults were obtained from adult education classes at Lake McBride School and from a Department of Labor and Health, Education and Welfare jointly sponsored vocational training project at Florida A & M University. This project was directed by Dr. Thomas Jackson and brought adults to the University to prepare them to be cooks, tailors, typists, etc. All students taught by the reading program were determined to be at the second grade level by an oral reading test developed by one of the project directors, Dr. Edwin Smith. They were run in the evening after regular vocational training classes or work had ended, and were paid for participating.

Those adults taking the arithmetic program were selected by Dr. Jackson as having the lowest arithmetic scores on the Stanford Achievement Test of all students enrolled in his classes. These ranged from the second to the fourth grade

TABLE 8

SUBJECTS USED FOR PROGRAM DEVELOPMENT

	Number M	Number F	Age Range	IQ Range	Section of Program Taken	Date	Average Min. Instruction Per Subject
Multi-Occupational Demonstration Project at Fla. A&M Univ.	4	8	23-51	62-90[2]	Counting	7/66	80
	4	5	23-47	68-90[2]	Addition	10/66	150
	2	2	21-40	70-83[2]	Reading Grade 2 Lessons 8-15	4/67	720
Fla. A&M Jr. High Sc.	10		13-16		Counting, Addition & Subtraction	12/66	330
Lincoln High Sc.	13		16-19	57-107[1]	Counting, Addition & Subtraction	12/66	270
Griffin Jr. High Sc.	9	10	12-18	61-116[1]	Addition, Subtra., Multi., & Div.	3/67	540
	2	4	12-15	60-99[3]	Subtraction	5/67	450
Adult Ed. Classes at Lake McBride Sc.	1	4	19-44		Reading Grade 2 Lessons 1-8	1/67	720

[1]California Test of Mental Maturity
[2]Wechsler Adult Intelligence Scale
[3]Wechsler Intelligence Scale for Children

level in computation, concepts, and application of arithmetic. These students received released time from their regular basic education classes and received no money from this project.

Adults used in both the reading and arithmetic classes were transported to and from the Florida State Computer-Assisted Instruction Center by university car.

Disadvantaged youths were obtained from local Negro junior and senior high schools. They were selected by the guidance counselors as being the poorest in the school in mathematics. These students were then interviewed by the experimenters and those that volunteered were required to obtain written permission from their parents to participate. The senior high students had ranged from the first to the forty-first percentile in quantitative ability on the Florida Statewide ninth grade test, with only one student scoring above the twenty-sixth percentile. School records on the achievement of junior high students indicated that they were well below their grade level in arithmetic. Small groups of students were picked up after school and brought to the Computer-Assisted Instruction Center on the Florida State University campus. After instruction they were returned to the neighborhood in which they lived. All students participating in the program were scheduled no later than 9:00 P.M. and only male students were scheduled after dark. The students were paid for participating, averaging $1.00-$1.50 per hour, depending on how fast they learned the material.

Students were selected from a wide variety of sources and with widely ranging IQs and ages in order to insure that the reading and arithmetic program finally developed would be generally useful for pre-vocational literacy training, and not tailored to a specific group.

E. Procedure. When the students arrived at the CAI center, they were escorted into the conference room. Here they were given some general instructions about the purpose of the experiment and the operation of the system. Questions about the research were answered. A demonstration of the operation of a student terminal, consisting essentially of a typewriter, was held for the whole group. They were shown the green light which indicated when they could respond and how to sign on to the system. The locations of various keys

were indicated. Students were then taken to individual student stations and started on the program by the experimenters. Again, any questions they raised were answered. This entire introductory process took about fifteen minutes.

At all times the students could call a proctor, usually Mr. Amos Rivell, the vocational educator employed by the project, by pressing a button when they encountered any difficulty. During the first hour of instruction the calls for help were frequent, but after this breakin period the needs for assistance were minimal. Paper and pencil were made available to the students taking the arithmetic portion of the program as assistance in working large problems. No instructional session with the computer lasted longer than 90 minutes, so that most students returned several times to the Computer-Assisted Instruction Center to complete their instruction. On the day they completed the program they were paid and given an informal interview on their experiences.

The complete typewritten record of instructions and student responses available from each student station was retained, and provided the record on which the data analyses were based.

Mr. Rivell's anecdotal records of his experiences with one group of arithmetic students are presented in Appendix D. They may give the reader a better impression of procedures and student reactions to the instruction.

CHAPTER III

RESULTS

A. Arithmetic Program Results. A total of sixty-nine disadvantaged youths and adults were used by Dr. Timothy A. Smith at various times of the year to debug and test the arithmetic program. The aim of debugging was to discover errors of logic in the programming and to determine if all of the program had been entered correctly. There were two main purposes of program testing. First, to determine if the program was organized correctly, and, if not, to provide data for reorganizing it on the basis of student performance. Second, to assess the program's effectiveness. That is, to discover if the students actually did develop the concepts and skills the course was designed to teach. Instruction units could then be revised if they did not have behavioral validity; i.e., changed student behavior. Also, additional units could be added for those students who were not making progress and an overall instructional strategy developed. For each of the sections of the arithmetic program developed this year, organization and effectiveness will be discussed in turn.

1. Counting. The initial organization of counting was in three lessons: Digit Recognition, Counting, and Generalized Counting. This structuring was on the basis of a topic and task analysis and the lessons adequately covered all the behaviors logically included under this topic.

Two groups of students have taken this section of the program. Neither the twelve adults taught in July 1966 nor the twenty-three high school students taught in December made a sufficient number of errors in any of the three lessons to determine if the organization scheme was adequate. Thus, this part of the program remains in its initial form.

Few of the students needed instruction in this section, so that the general effectiveness of the instructional units is still unknown. However, a few things about these lessons were

discovered.

One incidence of general difficulty was with problems involving zero. Most of the adults had to be assisted by the proctor in answering these problems, as they were so confused by them that they would not proceed without help. After these adults were observed in July, the program was modified to give a hint to the student for questions involving zero. Only three of the twenty-three disadvantaged youths responded correctly to the zero item in Test 2. The hint incorporated after the previous students' experience was as confusing as the question itself.

Another error that appeared frequently was a tendency on the part of some students to answer the question "? 11" on Test 2 by entering "11" into the computer. The correct response was "2," but since "11" was frequently elicited, the program was modified to respond to an entry of "11" with a message to the student of "WRONG. Try again." This error was not counted as such in the recording of student responses.

None of the twenty-three disadvantaged youths who tried the counting section of this course needed instruction in Lessons 1 and 3. In Lesson 2 four students needed instruction. One student used the response mode for Test 1 and received a zero score for the first ten problems in Test 2. He discovered his error in the instructional unit and passed the test on its next administration. Two students received Small Digit instruction. One student immediately was branched to Lesson 3 on retesting. The other received Large Digit instruction also, and passed the criterion test on his third try. The fourth student was branched to Large Digit instruction and got the first ten problems correct on retesting, branching to Lesson 3.

One adult was very confused by the instructions for Lesson 3 and made six errors in this test. He took the Row/Column instructional unit and was able to pass Test 3 on his next try.

This section of the course acted as a very good introduction to the CAI situation. Many of the adult students reported various "fears" regarding CAI before exposure to it. Several were reluctant to participate unless accompanied by

other students. But after one to two hours of exposure to the Counting section of the course, they expressed a very favorable attitude toward the entire experience. All of the students in this group volunteered to return whenever subsequent sections in the course were developed. This positive reaction of the students was due to the fact that the material was well within their ability. They received much positive feedback during their experience and this appeared to be an excellent way of starting instruction with these students (See Appendix D).

2. Addition. Three sets of students were instructed in addition by computer. In October nine adults from the Multi-Occupational Demonstration Project at Florida A & M University were run through the program. As the Addition section of the program was not completed at this time, these students were used primarily to debug the portion of this section that was finished. They appeared to learn from the addition materials but no hard evidence of this can be drawn from their records. By having them take the program, though, it was learned that the addition material was suitable for adults, and errors in program logic were discovered.

While a few problems were encountered by subjects in adapting to the computer system, none were of major significance. Early in this section of the program several subjects had a tendency to enter their addition answers backwards, ex. 21+35= 65 instead of 56. This was a natural error since the usual procedure in addition is to add 1+5=6 and then 2+3=5, and it is an easy slip to enter the numbers in this order. Unfortunately, the authors had not anticipated this sort of subject-system error and it was counted as an incorrect answer by the computer. The program has been subsequently corrected so that this sort of mistake is not counted as an error in the part of the Addition section of the program where it is first encountered and "You typed the answer backwards. Try again" typed back to the student instead. Students soon learn to enter their answers in the proper order.

(a.) Organization. Initially the division of Addition into lessons was done on an intuitive basis. Six lessons were written with tests and principally drill and practice type instructional units. Lessons were numbered in order from the counting lessons. Their order and names were: (4) 1-digit + 1-digit [simple facts]; (5) 2-digits + 2-digits;

(6) 1-digit + 1-digit + 1-digit; 2-digits + 2-digits + 2-digits; (7) 3-digits + 3-digits; 3-digits + 3-digits + 3-digits; (8) mixed problems with zero; (9) mixed length problems.

In December twenty-three disadvantaged youths were given the initial version of the addition lessons following the counting instruction. On the basis of their behavior, the program was reorganized. The reorganization followed a statistical analysis of the pretest errors of the twenty-three students. As part of the six lessons, all students worked sixty addition problems. The problems were worked before any instruction was given in that type of problem, so that numerous errors occurred. A statistical analysis was run to discover the kinds of problems for which errors were more frequent. Classes of problems for which few errors occurred and classes of problems for which many errors occurred were identified. With this information the lessons in addition were reorganized to consist of homogeneous classes of problems of differing difficulty levels.

The statistical technique used to do this was stepwise regression analysis (11). This method is a special kind of multiple regression analysis where a number of variables are used to predict a criterion (21). In the stepwise procedure a set of p independent variables are defined and each one individually is used to predict the dependent variable or criterion. The one which has the highest correlation with the criterion is selected first. It is then partialled out of, or removed statistically from, the other p-1 predictor variables and their remaining predictability assessed. If none of the other variables add significantly (.05 level) to prediction of the criterion after the first variable is partialled out, the stepwise procedure rejects them all and stops. If some of the remaining (p-1) variables do add significantly to prediction of the criterion, the one that adds the most to the prediction of the criterion is incorporated into the regression equation with the first variable, and the prediction from this equation is partialled out of the other p-2 variables in the set. Then the procedure determines if any of the remaining p-2 variables contributes significantly to the overall prediction after partialling. Again the one that contributes the most is selected as the third variable in the prediction equation. This stepwise procedure is continued until a stopping point is reached or until all the variables are incorporated into the prediction system.

In this case the number of students getting a particular problem correct (difficulty level) was the criterion or dependent variable. Independent variables or predictors were characteristics of each problem. They are presented in Table 9 with their ranges. They are all aspects of a problem which might be imagined to contribute to its difficulty. For instance, the problem 35+26 was the fourth problem on Test 5; It had two columns, two rows, four digits, a correct answer of 61, required one carry, and had a smallest number of 26. These characteristics were determined for all sixty addition problems which all students initially worked in Tests 4 through 9. Thus the regression was based on an N of 60, the unit sampled being a problem. The first variable selected in the stepwise procedure was number seven, number of carries. None of the other variables significantly contributed (.05 level) to the regression when included. The correlation between amount of carrying and number correct was .57, the equation being (number correct) = 21.93 - 1.36 (number of carries). Thus when no carrying was involved, it was predicted that 21.93 of twenty-three students (95%) got the problem correct, when one carry was needed 20.57 of twenty-three (89%), two carries, 19.21 of twenty-three (84%), three carries, 17.85 (78%). The regression accounted for 32.6 per cent of the variance in the number of people correct on addition problems (difficulty level).

From this analysis it appeared that carrying should be an important consideration in organizing lessons in addition. On this basis the program was revised. Two lessons (4 and 5) were constructed concerning problems in which no carrying was involved; one lesson covered simple facts, the other dealt with larger problems in which no carrying was required. One lesson (6) was developed in which all problems required the student to carry once. The instructional units were aimed at developing the carrying skills. Another lesson (7) covered problems in which multiple carrying was involved.

By organizing lessons this way it was expected that for another group of students each problem within a lesson would be of the same difficulty level, even though the problems might have differing correct answers, number of digits, positions on a test, etc. The reasoning was that for the first sample of disadvantaged youths these factors did not contribute to a problem's difficulty and therefore they could be ignored. Also, this organization scheme should have placed the lessons

TABLE 9

INDEPENDENT VARIABLES FOR REGRESSION ANALYSIS OF ADDITION

Variables	Original program[1] Range	Reorganized program[2] Range
1. Item sequence in test	1-10	1-10
2. Number of columns to be added	1-5	1-5
3. Number of rows to be added	2-4	2-4
4. Total number of digits to be added	2-10	2-14
5. Number of digits in correct answer		1-5
6. Correct answer	3-96639	3-80781
7. Number of carry operations	0-3	0-3
8. Smallest number in a problem	0-3898	

[1]Number correct = 21.93 - 1.36(7)
(23 possible)
Multiple R = .57; R^2 = .326

[2]Number correct = -1.218(7) + 17.360
(19 possible)
Multiple R = .624; R^2 = .389

in increasing order of diffidulty. Lesson 4 would be the easiest and Lesson 7 the most difficult. Thus, a hierarchical ordering of lessons in addition was achieved for disadvantaged youths.

In March another group of nineteen students began instruction by taking the reorganized addition section of the program. A stepwise regression was again calculated for the forty addition problems which all students had worked on Tests 4a, 5a, 6a and 7a. The various independent variables with their ranges are presented in Table 9. The first variable selected in the stepwise procedure was again the number of carry operations. None of the other variables contributed significantly to prediction when included. The correlation between the number of carries and the number of students getting a problem correct was .62, the equation being: number of students answering item correctly (19 possible) = -1.218(7) + 17.360.

Thus, the principles upon which this section of the arithmetic program was reorganized did cross-validate. At present the only aspect of an addition problem that has been discovered to contribute to its difficulty for disadvantaged youth is carrying. Additional studies may, however, reveal other important facets.

(b.) Effectiveness. An internal sign of the effectiveness of addition instruction is the number of students who failed a pretest for a particular lesson and passed a posttest on the same topic. This gives some indication that the instructional unit was doing its job; i.e., improving arithmetic behaviors. The effectiveness of an instructional unit can also be judged by the number of times a student took it before he reached criterion on a posttest. It would seem that a student should only have to take an optimal instructional unit once in order to pass a posttest in the material taught, but this could be very inefficient if instruction was carried on well beyond the point needed to change his behavior. Thus, in the arithmetic program, instructional units were kept under an hour so that no student was taught much longer than was necessary. Very poor students were handled by having them take the same instructional unit several times and in this way lengthening their experience to the proper point.

TABLE 10

OLD LESSON 7
3-DIGIT + 3-DIGIT
3-DIGIT + 3-DIGIT + 3-DIGIT

Percent of pretest correct	Number of cases	Number of times through instruction to reach criterion 1	2	3	4
80	7	6			1*
70	2	1		1	
60	1	1			
50	2	1	1		
Total	12	9	1	1	1

*Did not reach criterion

TABLE 11

OLD LESSON 9
MIXED LENGTH PROBLEMS

Percent of pretest correct	Number of cases	Number of times through instruction to reach criterion 1	2	3
80	4	4		
70	3	2		1
Total	7	6		1

Tables 10 and 11 show the results for Lesson 7 and 9 of the initial organization of addition instruction. These are the only lessons for which more than a handful (2-5) of students needed instruction. For Lesson 7 twelve students needed instruction. Their pretest scores ranged from fifty to eighty per cent correct. Nine of these scored at least ninty per cent on the posttest immediately following their initial instruction. One met test criterion after two instructions, and one after three. One student who scored eighty per cent on the pretest never did score at least ninty per cent on any of the succeeding testings. He was branched to Lesson 8 and experienced no difficulty with it or the remaining addition lessons. The investigator feels that perhaps this student was not always trying, since he passed more difficult problems after repeatedly failing easier ones.

With the initial organization of the program seven students required instruction for Lesson 9, Mixed Length Problems. Six students passed the posttest after going through instruction once, one student needed three instructions before passing.

An instructional unit for Lesson 5, 2-digits + 2-digits, was prepared, teaching these problems in terms of set theory or the "new" math. The unit, called Symbol 1x, was administered to three students. They found it to be very difficult and confusing, actually learning more from just working problems with feedback. The unit was abandoned.

Tables 12, 13, 14 and 15 present the instructional record for the addition section of the program under its new organization. For those lessons where ten or more students needed instruction, the table shows the performance of those who took the Verbal and the Drill and Practice instructional units separately. No problems were encountered in instructing students in simple addition facts. Three students needed extensive instruction in large problems and one student required extensive instruction in problems involving only one carry. All eventually, though, passed the test of the behavioral objectives of the lesson.

In Lesson 7, which treated problems in which multiple carries were required, three of thirteen students needed more than three instructions before reaching criterion. One student did not reach criterion after four instructions even though he began the lesson scoring in the eighties on the preliminary test.

TABLE 12

LESSON 4
SIMPLE ADDITION FACTS

Percent of pretest correct	Number of cases	Number of times through instruction to reach criterion 1
80-85	4	4
70-75	1	1
60-65	2	2
Total	7	7

TABLE 13

LESSON 5
LARGE PROBLEMS

Percent of pretest correct	Number of cases	Number of times through instruction to reach criterion 1	2	3	4	5	6
80-85	5	2	1			1	1
70-75	1	1					
60-65	1					1	
Total	7	3	1			2	1

TABLE 14

LESSON 6
CARRY ONCE

Percent of pretest correct	Number of cases	Verbal: Number of times through instruction to reach criterion 1	2	3	4	5	6	7	Drill and Practice: Number of cases	Drill and Practice: Number of times through instruction to reach criterion 1	2	3
80-85	3	1	2						2	2		
70-75	1							1	1			1
60-65	2	1	1						3		1	2
10	1	1							0			
Total	7	3	3					1	6	2	1	3

TABLE 15

LESSON 7
MULTIPLE CARRY

Percent of pretest correct	Number of cases	Verbal: Number of times through instruction to reach criterion 1	2	3	4	5	Drill and Practice: Number of cases	Drill and Practice: Number of times through instruction to reach criterion 1	2	3	4	5
80-85	2	1	1				2	1				1*
70-75	2			1		1	2		2			
60-65	0						2			1		1
50-55	2	1		1			2		2			
Total	6	2	1	2		1	8	1	4	1	1	1

*Did not reach criterion

An external indication that the addition section of the arithmetic program was effective was a substantial increase in the addition part of the number facility test of the Primary Mental Abilities for grades 4 - 6 (43). Fourteen of the nineteen March students were given this test before taking the arithmetic program. Their average score was 11.5. After completing the Addition, Subtraction, Multiplication and Division sections of the program they were posttested. Their mean score was 16.[illegible] an increase of nearly forty per cent, yielding a t of 5.9, significant at the .001 level with thirteen degrees of freedom. This indicates that the computer instruction generalized beyond the terminal situation and will help students in traditional paper and pencil tests of ability.

3. Subtraction. Three separate attempts were made to instruct disadvantaged youths in subtraction. In December 1966, twenty-three students were given an initial draft of the program after receiving instruction in counting and addition. In March 1967, nineteen more students took a revised subtraction section following addition instruction. From this group of nineteen, six of the poorest were selected to take a further revision of the subtraction section in May 1967.

(a.) Organization. The initial division of the Subtraction section of the program was into the following five lessons: (10) 1-digit - 1-digit; (11) 2-digit - 1-digit; (12) 2-digit - 2-digit; (13) 3-digit - 3-digit; (14) mixed digit subtraction. The instructional units consisted of drill and practice with focus on the type of problem missed by the student. Drills were available in Lesson 10 for problems with and without zero present, and in Lesson 11 for problems involving borrowing and not borrowing.

A statistical analysis of pretest errors of the twenty-three students run in December was made. Again the stepwise regression analysis procedure was used. Variables included in the analysis are listed in Table 16. For the fifty subtraction problems for which complete data were available, the number of borrows was selected as the first variable in the stepwise procedure. None of the other variables added significant predictability to the first one selected. The correlation between number of borrows and number of students

TABLE 16

INDEPENDENT VARIABLES FOR REGRESSION ANALYSIS OF SUBTRACTION

Variables	Original program[1] Range	Reorganized program[2] Range
1. Item sequence in test	1-10	1-10
2. Number of columns in problem	1-5	1-5
3. Total number of digits in problem	2-10	2-10
4. Number of digits in answer		1-5
5. Number of digits in subtrahend		1-5
6. Correct answer	0-62130	0-5000
7. Number of borrow operations	0-2	0-3
8. Smallest number in problem	0-10007	

[1]Number correct = 22.31 - 3.21 (7)
(23 possible)
Multiple R = .73; R^2 = .537

[2]Number correct = -1.640(7) + 13.262
(15 possible)
Multiple R = .581; R^2 = .338

getting a problem correct was .73 with number correct (23 possible) = 22.31 - 3.21 (number of borrows). The regression accounted for 53.7 per cent of the variance in the number of people correct on subtraction.

Because of this analysis, the subtraction section of the program was reorganized into four lessons: (8) Simple Facts; (9) Large Problems; (10) Borrow Once; (11) Multiple Borrow. Each lesson after the first two increased in difficulty by requiring more borrowing operations. In this way a progressively difficult order of instruction for disadvantaged youths and adults was derived.

In March 1967, nineteen more students took this section of the program. A stepwise regression analysis was done on subtraction pretest scores of the fifteen students who had taken all subtraction lessons. Variables included in the analysis are listed in Table with their ranges. Again the first and only variable to significantly predict difficulty level was the number of borrow operations. The correlation between the two variables was .58, the regression equation being number correct (15 possible) = -1.640 (number borrows) + 13.262. Thus the subtraction regression analysis also replicated.

From observing the twenty-three students learning subtraction in March, it was discovered that students were not being given any instruction in subtracting 1-digit numbers from the numbers ten through nineteen. From a task analysis it appeared that this skill was necessary in problems involving borrowing. Because of this, Lesson 8.5 (Teens) was written and used with the final six students put through this section of the program in May.

(b.) Effectiveness. Tables 17, 18, and 19 show the results for Lessons 12, 13, and 14 of the initial organization of subtraction instruction. These were the only lessons for which a large number of the twenty-three December students needed instruction. For all three lessons only one student did not pass a posttest after taking the instructional units twice. This student's difficulty was in borrowing, incorrectly reducing digits that he had borrowed from. He gave an additional reason to revise and enlarge the borrowing instruction of the program.

TABLE 17

OLD LESSON 12
2-DIGIT - 2-DIGIT

Percent of pretest correct	Number of cases	Number of times through instruction to reach criterion 1	2
80	2	1	1
70	1	1	
60	2	2	
50	1	1	
Total	6	5	1

TABLE 18

OLD LESSON 13
3-DIGIT - 3-DIGIT

Percent of pretest correct	Number of cases	Number of times through instruction to reach criterion 1	2
80	7	7	
70	4	1	3
60	1		1
30	1	1	
Total	13	9	4

TABLE 19

OLD LESSON 14
MIXED DIGIT

Percent of pretest correct	Number of cases	Number of times through instruction to reach criterion 1	2	3
80	4	3	1	
70	1			1*
60	2	2		
Total	7	5	1	1

*Did not reach criterion

Tables 20 and 21 present the record of instruction for the nineteen students run in March 1967. Only one and four students respectively required instruction for Lessons 8 and 9, and all but one in Lesson 9 passed the first posttest administered. Three students did not pass a behavioral objectives test on Lesson 10 after one or two instructions. Their performance initially was very poor in that they literally did not know how to borrow as shown by their scores of zero and ten per cent on the pretest. Two of these students had passed the pretest for Lesson 9 and the other scored eighty per cent on the pretest. The problems in Lesson 9, while often being very large, required no borrowing. These students' performance reinforced our belief that the division of the subtraction section of the program was correct.

Four students who had passed Lesson 10 were unable to reach criterion in Lesson 11. They all showed improvement but did not solve, with at least ninty per cent reliability, problems in which considerable borrowing was involved. Because of them and the three students who had considerable trouble with Lesson 10, the instructional units on borrowing were revised and these students invited to return for more subtraction instruction.

Six of the students who had great difficulty with subtraction were run through a revised subtraction section of the program. One was Student 36, a Negro boy with a full scale IQ (WISC) of 99. On returning he had little trouble with the material, needing Drill and Practice instruction only in Lesson 10. He finished this after two instructional experiences. Previously this student had great difficulty working subtraction problems that required borrowing. The general impression was that he was careless and disorganized in doing these complex tasks. His performance indicated that he had gotten some help from his previous CAI experience. This student also showed a twenty-nine per cent increase in the number of correct subtraction problems worked on a paper and pencil pretest-posttest. This test was derived from the Los Angeles Diagnostic Tests, Fundamentals of Arithmetic, Form 1 (1).

Student 35 was a male Negro with a full scale IQ (WISC) of 83. In this session he improved from forty to one hundred per cent in Lesson 9 after one instruction. He required three instructions to pass Lesson 10 and did not exceed the seventy per cent level in Lesson 11 after three instructions. This

TABLE 20

LESSON 10
BORROW ONCE

		Verbal			Drill and Practice					
		Number of times through instruction to reach criterion			Number of times through instruction to reach criterion					
Percent of pretest correct	Number of cases	1	2	Number of cases	1	2	3	4	5	6
80-85	4	3	1	1	1					
70-75	2	2		0						
60-65	0			1	1					
50-55	1		1	1	1					
10	0			2		1*			1	
0	1	1*		0						
Total	8	6	2	5	3	1			1	

*Did not reach criterion

TABLE 21

LESSON 11
MULTIPLE BORROW

		Verbal					Drill and Practice			
		Number of times through instruction to reach criterion					Number of times through instruction to reach criterion			
Percent of pretest correct	Number of cases	1	2	3	4	Number of cases	1	2	3	4
70-75	4		2**	1	1*	2		1		1*
55	1			1		0				
40	0					1				1*
30	0					1				1
Total	5		2	2	1	4		1		3

*Did not reach criterion
**One did not reach criterion

student seemed to reach an asymptote in solving complex problems with present instructional units. But he increased thirty-one per cent on the pre-posttest. This student received instruction in the Drill and Practice mode.

The remaining four students were female Negroes with full scale IQs ranging between 60 and 70. This is classified by Wechsler as the mental defective range. However, Caldwell and Smith (7) estimated that fourteen per cent of the Southern Negro school children have full scale IQs in the 64-75 range, and over two per cent of these children have full scale IQs (WISC) below 64. Thus these girls were all enrolled in a Southern Negro junior high school.

All of the girls passed the pretest for Lesson 8 (Simple Facts). In other words, they knew 7-3, 6-2, etc., with ninty per cent or more accuracy. Only one passed the pretest for Lesson 8.5 (Teens). The other three scored between forty and sixty per cent on this test. After six instructions, two of the girls attained the ninty per cent level on the posttest. One got no higher than eighty per cent even after nine trips through the instructional unit. She was branched to Lesson 9 anyway by the proctor.

All four girls passed the pretest for Lesson 9. In Lesson 10 the girl who did not need instruction in Lesson 8.5 passed the behavioral test after one drill and practice instruction. Proceeding to Lesson 11, she scored seventy per cent on the pretest but never exceeded that figure after eight posttests following instruction. Both styles of instruction were tried with this girl but neither improved her performance above this ceiling.

The other three girls never passed the posttest for Lesson 10. One girl improved her performance from ten to forty per cent while receiving the Verbal instructional unit five times. Another improved from twenty to sixty per cent while receiving the Verbal unit four times. The third girl improved from an initial test score of forty per cent to eighty per cent while taking the Verbal unit three times and the Drill and Practice unit once.

Two of the four girls did slightly better on the pencil and paper posttest, while one remained the same and the other decreased slightly. Generally they made slow but steady progress

and showed that perhaps the main virtue of the CAI system is its patience. Certainly it would be very difficult to find many teachers who would be willing to give nine hours of tutorial instruction on borrowing in subtraction.

4. Multiplication. For multiplication, only results bearing on the organization of the section were obtained. No results were obtained on instructional units' effectiveness for this topic and, in fact, the units are only in the planning stage. But eighteen of the nineteen disadvantaged youths who were given instruction in addition and subtraction in March 1967 also took initial versions of the pretests for the multiplication section of the program. For fifty of the pretest problems the independent variables listed in Table 22 were considered in the stepwise regression. Variables 3, number of digits in the multiplier; and 4, zero present in multiplicand or multiplier, were initially selected by the stepwise procedure. None of the other independent variables added significantly to the multiple correlation of .79. The regression equation was: number correct (18 possible) = -5.020(3) - 4.820(4) + 19.682. The regression accounted for 62.1 per cent of the variance.

From this analysis the following tentative lesson plan was derived. Lesson 1 would cover all problems with a 1-digit multiplier but none of the problems would have zeros. Multiplicands would vary as would other aspects of the problems. The regression equation would predict that 14.66 of eighteen (81%) disadvantaged youths would get each problem in this lesson correct, in the initial administration of the lesson. Lesson 2 would involve problems with 1-digit multipliers and zeros present in either the multiplicand or the multiplier. It would be predicted that 9.84 of eighteen (55%) disadvantaged youths would work each pretest problem in this lesson correctly, if it was administered initially. Lesson 3 would consist of problems with multipliers of two digits, but having no zeros. On the average we would expect 9.64 of eighteen (54%) disadvantaged youths to work each pretest problem in this lesson correctly, if it was administered first. Last would be Lesson 4, a lesson with 2-digit multipliers and zeros present in either the multiplier or multiplicand. If students took this lesson initially only 4.82 of eighteen (14%) would get each problem right on the pretesting.

TABLE 22

INDEPENDENT VARIABLES FOR REGRESSION ANALYSIS OF MULTIPLICATION

Variables	Range
1. Item sequence in test	1-30
2. Number of digits in multiplicand	1-9
3. Number of digits in multiplier (answer required addition)	1-2
4. Zero present in multiplicand or multiplier (yes-no)	0-1
5. Number of carry operations in multiplication	0-4
6. Number of carry operations in addition	0-2
7. Number of carry operations in multiplication and addition	0-5
8. Number of carry operations in multiplication times addition	0-4
9. Number of digits in answer	1-9

Number correct = -5.020(3) - 4.820(4) + 19.682
(18 possible)
Multiple R = .788; R^2 = .621

This lesson plan arranges the lessons in ascending order of initial difficulty. It systematically treats those aspects of multiplication which contribute to errors in disadvantaged youths. At our present stage of knowledge it seems to be the best organization scheme for most disadvantaged youths and adults.

5. Division. For division, too, information was gathered on the organization of lessons but not on the effectiveness of instruction. Eighteen of the nineteen students who received instruction on addition and subtraction in March took the pretests for division. Sixty problems were described according to the variables listed in Table 23. Variables 1, 3, 4 and 6 all contributed significantly to the regression. The multiple R was .93 with the regression equation being: number correct (18 possible) = -2.687(1) - 2.060(3) - 2.840(4) - 2.453(6) + 20.203, and the percentage of variance in the difficulty level of an item accounted for was 87.2.

From these results a lesson plan was derived. Lesson 1 would consist of problems with 1-digit divisors. All of the answers or quotients would be of one digit. Lesson 2 would also consist of problems with 1-digit divisors and either 2- or 3-digit quotients. Emphasis would be on 2-digit quotients and three-fourths of the problems would be of this type. Lesson 3 would involve 2-digit divisors, but only 1-digit quotients. Lesson 4 would include larger problems with 2-digit divisors, all quotients having two digits. The last lesson, Lesson 5, would treat problems with 2-digit divisors and 3-digit quotients. This structuring places the lessons in order of initial difficulty for disadvantaged youths with Lesson 1 being the easiest and Lesson 5 the most difficult.

The two other important aspects of division problems would be treated within each lesson. A counter would keep track of those problems with zeros in the quotient and any student that missed several of these would be sent to an instructional unit on this sort of problem. Also a counter would indicate those problems with remainders in subtraction missed by a student and again branch him to instructional units treating this difficulty. Problems would be carefully selected to enable independent identification of difficulties with quotient zeros and remainders in subtraction, and these two factors would be balanced between each lesson so as to not contribute to the order of initial difficulty of the lessons.

TABLE 23

INDEPENDENT VARIABLES FOR REGRESSION ANALYSIS OF DIVISION

Variable	Range
1. Number of digits in divisor	1-2
2. Number of digits in dividend	1-5
3. Number of digits in quotient	1-3
4. Number of zeros in quotient	0-1
5. Number of borrows in subtraction	0-1
6. Number of remainders in subtraction	0-2
7. Number of carries in multiplication	0-2

Number correct = -2.687(1) - 2.060(3) - 2.840(4)
(18 possible) -2.453(6) + 20.203
Multiple R = .934; R^2 = .872

B. Reading Program Results. A systems approach was used in the reading program by Dr. Edwin Smith in which the two year work schedule was to:

1. develop grade level objectives,
2. write the program according to the grade level objectives,
3. enter the program into the computer,
4. run initial debug using project personnel,
5. run try-out subjects at the level for which the program was written,
6. rewrite the program as indicated by the results of the try-out subjects,
7. run the research population in the final stages.

In the time available, all of the steps down to number 7 were completed for some sections of the program. Step number 7 was not accomplished since the final stages of the program were not reached because the project was not refunded. The amount of writing accomplished in the program is shown in the Methods section of this report.

In following the general plan of the proposal, two groups of students were used to try out the Grade 2 lessons of the program. In contrast to the arithmetic program, fewer students were run for longer periods of time in order to try out the larger amount of reading material available. There were only one or two minor malfunctions of the equipment due to the programming, and the material was unusually smooth in operation indicating adequate preplanning.

While no prognosis can be made from the data for large numbers of students, there was some slight indication that the students were learning, as illustrated by improved mean scores on pre- and posttests of the behavioral objectives for the lessons taken. These data were collected only for the last group of students. More indicative of the instructional value of the program were the student reactions. These were observed closely while the students were going through the program and when the students were informally interviewed after participation. There was a consensus among the students that they enjoyed this type of instruction and felt they would learn more from this program than from a normal classroom situation. The outstanding features of this program to the students were:

1. the deletion of irritating personality factors that are present in classroom instruction
2. the individualization of instruction
3. the pacing function of the program which did not allow the student to progress until he had mastered the material
4. the diversification of the subject content
5. the feeling of accomplishment
6. the novelty of the situation.

1. The Audiovisual Aids. During the original planning of this project, the decision was made to write two instructional programs. One program was to be designed with an audiovisual component. The other program was to be written without these aids. Since it was the consensus of the project directors that the most difficult of the two programs to develop would be the one with the audiovisual component, this program was the one developed first for reading.

In July and August the writers were trained to write lessons complete with audiovisual. The audiovisual components were an integral part of each lesson. When these lessons were put into coursewriter language, it was necessary for both the audio and visual components to function properly to insure progression through the lessons. The programming logic was such that a malfunction of either the tape recorder or the slide projector disabled the entire program. Approximately one-half of Grade 2 was written using this logic. A great deal of difficulty was encountered in attempting to write and use these lessons.

Four specific difficulties were encountered. 1. In order to function, each selection on a tape had to be preceded by a beep consisting of a 400 cycle tone of fixed duration. Although the tape recorder supplied in the audiovisual student terminal was equipped to record and insert the required "beeps," there was neither audible nor visual indication that the "beep" was being recorded. Therefore, if the circuit was inoperative, or if the person recording made an error such as not depressing the beep recording button firmly, all the selections on the tape were not usable. The probability of recording 100 or more selections on one tape with no errors was very low under these conditions. The technical personnel at the CAI Center experienced the same difficulty while making a test tape. Apparently, the only certain check for a tape was to test it

in actual use at the student terminal. 2. The microphone switch on the first audiovisual terminal was broken when the project was started. This was never fixed. When the second audiovisual terminal was delivered after more than a month delay, the new microphone was defective too. This was never replaced. 3. No interconnection cable was provided with the IBM audiovisual equipment in order that the tape selections might be prerecorded on another machine and retranscribed on the IBM equipment. This would have helped, since all the work but adding the beeps to the tape could have been done before hand, saving use time of the only IBM recorder in Tallahassee. As the input connection on the Uher recorder was not standard, two months were required to get parts to construct a cable for this purpose. 4. Even when tapes were properly prepared, the entire audio component, including the tape recorder, was found to be disconcertingly low in reliability.

Since these experiences with the audio component were so unsatisfactory, it was decided in the latter part of December 1966 to change the approach to compensate for the audiovisual problem, and reading instructional materials were prepared without audiovisual components. The audiovisual tapes and slides were thereafter prepared separately to enrich and clarify the basic instructional program. (A portion of the reading program was prepared with visual aids only, but this was discontinued and the material was rewritten in accordance with the new plans). The new attack on the problem provided for one instructional program without audiovisual. The second program of instruction consisted of the same typewriter printout with tapes and slides added to simplify and clarify concepts, meanings, and ideas. This approach provided a method whereby the basic program could be entered, debugged, and tested. The audiovisual materials were prepared but not integrated into the program immediately. This approach also provided for an improved research design, since the only difference between the two instructional programs was the audiovisual aids.

Concurrently, research was continued on developing slides and tapes. Plans called for insertion of the tapes and slides via conditional branching. With this system, the program could be changed by the proctor from audiovisual to non-audiovisual by simply inserting a number in a specified counter. This number acted as a signal to turn the audiovisual on or off at each place it occurred in the program (see Appendix C).

Thus any lesson could be used with or without the audiovisual components. One advantage of this method of programming was the provision for the student to continue instruction in case of failure of the audiovisual component. Audio was added to one lesson (#8) in May of 1967. Using these programming techniques, it seemed to function well. However, the authors still have some doubts regarding the instructional value, as well as the reliability, of the audio component. Subjects have not been tested on this lesson in its present form. Visuals, though, have been added to all of Grade 2, and are satisfactory.

In view of the difficulties encountered, the arithmetic program was developed without an audiovisual component. As soon as the audiovisual problems were solved by the reading group, this addition was to be made to the arithmetic program. This could have easily been done since the addition of the audiovisual component, using the present method of programming, is a fairly simple procedure once tapes and slides have been produced. The addition of audio to Lesson 8 required approximately 45 minutes of computer time.

Several conditions of the audiovisual equipment were revealed in the course of this research and these are reported here for their possible interest to others. 1. Much time was lost attempting to produce usable tapes on 0.5 mil tape before it was found that the tape recorder functions only on 1.5 mil mylar tape. 2. The Carousel projector will only function properly with a teflon coated slide holder. 3. The slide holder should be removed from the projector as a precaution when the student terminal is used with a non-audiovisual program. This prevents the drive wheel from becoming damaged if the printer #2 switch is in other than the receive only position.

While every attempt was made by service men to keep the equipment functioning properly, and service in general was unusually rapid, delivery and repair of some critical items, such as microphones, caused considerable loss of time in the research.

2. Entering the Program by Punching Cards. Because of the heavy use of the Florida State University Computer-Assisted Instruction Center and the large amount of material developed to teach second through seventh-grade reading, long delays occurred in entering the reading program into the computer system. While writing on this portion of the program has reached the seventh-grade level, only the second-grade material has actually been entered into the computer (see Method). Part of the third grade has been punched on cards which could be quickly loaded into the computer. But this method of entering a program has several drawbacks when compared with entering it via the student/author station (see Method).

a. This work is only practical with an IBM 29 keypunch, other models requiring as many as three or four punches for certain characters.

b. Even with an IBM 29 keypunch several characters necessary for any program require double punching, slowing the work down and requiring the skills and temperament of a professional keypuncher.

c. Punched cards are hard to correct and if the card is verified as a check for accuracy, every card has, in effect, to be punched twice. Even after this work, a printout of the program would have to be inspected for errors made in loading the program into the computer.

CHAPTER IV

DISCUSSION

The major objective of this project was to design and develop a computer-assisted programmed course to teach arithmetic and reading to adults and disadvantaged youths. In the process of development it was necesaary to give preliminary testings to the materials that were being developed. Some feedback was necessary to guide the writing of the program, but in no way were these studies meant to be a final testing, nor was any of the empirical work reported here aimed at definitively testing an empirical hypothesis. Thus much of the data gathered as part of this project are presented in the results section in tabular form. No hypothesis testing techniques were applied to this information, for the samples were too small and the observations too uncontrolled.

For the stepwise regression analyses the samples of problems were large enough to allow hypothesis testing even though the number of students involved was small. Also the stepwise regression analyses of addition and subtraction contained in this report replicate similar analyses done by Suppes, Hyman, and Jerman (40). They used suburban middle class third to sixth graders who were not allowed to use pencil or paper when working on the computer. Problems were presented horizontally in several formats and only 2-digit numbers were involved. In seven of eight addition analyses and in six of seven subtraction analyses, number of steps, a variable which included carrying and borrowing in its definition, had the largest beta weight of three independent variables. Generally the other variables were unimportant for predicting the proportion of errors of problems. Suppes, Hyman, and Jerman concluded that "NSTEPS is the most important of the three variables in predicting both errors and success latencies" (40).

While the major aim of this project was to develop instructional materials, it was also necessary to develop arithmetic tests to be used to guide instruction. Standardized tests which were available had several drawbacks. These tests were not designed to measure performance on only one behavior

and hence, gave one grade level score to each student based on working several different types of arithmetic problems. Thus, the total score did not indicate which behaviors the student had or had not mastered. Rather it was a normative score; that is, represented a comparison of his performance with that of other individuals (15). Thus, arithmetic tests had to be developed consisting of empirically homogeneous classes of items so that a total score on the test was behaviorally meaningful.

Arithmetic tests developed for this program contained large enough samples of items to determine if subjects should be branched to instruction on a particular problem type. As Coulson and Cogswell (8) state "the requirements placed on diagnostic items in a program are quite severe, because the items must give precise information about a student's knowledge of each subskill which the program is designed to teach." But standardized tests contain only one or two examples of each type of addition, subtraction, etc. problem, and these samples are too small to determine if a student had mastered completely a particular operation or concept.

Lastly, testing in a group setting does not give the examiner any progressive feedback which he can use to guide his testing. Computerized tests like the ones in this program do this, and cybernetic testing (38), as it is sometimes called, saves both student and computer time.

Cox and Graham (9) also have addressed the problem of designing a test to meet the needs of programmed instruction. In their study they constructed achievement tests where the subjects were ranked on the basis of total correct responses. They defined the terminal objective as the ability to add two 2-digit numbers involving carrying and developed a test of the prerequisite skills. This fifteen item test, one item for each prerequisite skill or subskill, was used with kindergarten and primary grade children. The response data were ranked by total score and the response pattern plotted. Using a Guttman scaling model (44) they obtained a reproducibility coefficient of .961.

For the majority of the students who participated in the investigations of the arithmetic program, the instruction provided was adequate. For the counting section, difficulty in instructing students was encountered only for zero items.

Perhaps there is a different set of concepts involved in the use of a symbol which means the complete absence of some specific item or items and it may be necessary to develop an entire lesson to teach this concept.

In addition and subtraction several students seemed to reach an asymptote in performing complex problems. Because of this a new type of instructional unit is being developed by Mr. Arthur King, a graduate student at Florida State University. He closely observed six students working these complex problems. The students who participated displayed in their performance that they had mastered the principles needed to add successfully, but several of them had individual habits that produced errors. It is hypothesized that extensive training on a step-by-step program that forces the student to use good habits would lead to significant improvement for students of this type.

In regard to instructional strategies, too little information is available to evaluate differences in effectiveness for Verbal and Drill and Practice arithmetic instruction. There does not seem to be a strong trend for either method to be overwhelmingly superior. In fact, the limited results of the two methods of instruction are virtually identical. Again definite conclusions are not possible because of the project being terminated prematurely.

There is some indication that the arithmetic program does change behavior and improves students' arithmetic performance, but since no control groups were run, neither the fact that most students who needed instruction eventually reached posttest criterion nor the small number of paper and pencil pre- and posttest improvements definitively demonstrates the worth of the program.

A fair number of students were run through several of the sections of the arithmetic course, and it was evaluated as to how optimally organized each section was and how effective were the instructional units. This could not be done on the reading program because of the difficulties encountered in entering its far greater number of lessons, and in getting the audio-visual component of the IBM 1440 computer to work properly. Because of these problems the major effort in the first year for reading was directed to writing and encoding lessons. It was planned to enter, debug, and test out these lessons in the second year, when systems problems would be solved.

As can be seen from Chapter II of this report, the reading program is ready for input and further debugging. The original time schedule of the proposal was generally met, but the major question, to be answered in the second year, of "how effective is computer-assisted instruction in teaching functionally illiterate youth,"remains unanswered since the second year of the project was not funded.

CHAPTER V

CONCLUSIONS

It is very difficult to reach any conclusions for this project since it is unfinished. After another year of investigation a number of questions would have been answered; but at this stage of completion only a few definite statements can be made. These are:

1. It is feasible to teach adult illiterates and disadvantaged youths arithmatic and reading by computer-assisted instruction. They do not find the computer system too complicated and, after a proper introductory experience, they are enthusiastic about it as an instructional media.

2. The arithmetic program at its present stage has been effective in improving the arithmetic performance of small numbers of students. Also stepwise regression analysis of students' pretest errors is a good statistical procedure for empirically developing a lesson plan for arithmetic.

3. The reading program as developed, appears to be a potential method of instruction. Mature illiterates are able to work through it, and are enthusiastic about it.

4. The visual aids of the 1440 computer system can be used to assist instruction, but the audio accessory is not sufficiently reliable for large scale use at this time.

In general it appears to the investigators that computer-assisted instruction can be used as a teaching procedure for adult literacy training. A large part of a complete program to do this has been written and much of it entered into the computer and debugged. Pilot data indicate that further testing of the program is warranted.

CHAPTER VI

SUMMARY

The major objective of this project was to design and develop computer-assisted programmed courses to teach arithmetic and reading to disadvantaged adults and youths. These courses were to develop basic abilities requisite to entering most vocational training programs. Because of budgetary cuts at the national level, the project was terminated at the end of the first of its planned two years.

Lessons in Counting, Addition, and Subtraction were completely written and tested, and lessons in Division and Multiplication were started. Fractions and Word Problems are untouched. A lesson typically includes a pretest to determine if a student needs instruction, two instructional units of differing focus, and a posttest to evaluate the effects of instruction. In pilot tests the arithmetic lessons have been effective in improving the performance of small numbers of students. Stepwise regression analysis of students' pretest arithmetic problem errors has guided the organization within a topic of homogeneous lessons ordered by increasing initial difficulty.

All of Grade 2 (24 lessons) of the reading program has been entered into the computer and debugged. Most of the lessons for Grade 3 are ready for immediate entry and lessons for Grades 4, 5, and 6, have been written, but slides are not complete. Lessons for Grade 7 have been started. All lessons are accompanied by slides. Audio tapes were developed as options since the audio accessory in the IBM 1440 system was not found to be sufficiently reliable. The several adult illiterates that have worked through the reading lessons were enthusiastic about them.

In general it appeared that computer-assisted instruction can be used in pre-vocational literacy training for disadvantaged youths and adults; but its effectiveness has yet to be demonstrated.

REFERENCES

1. Armstrong, Caroline, and Clark, W. W. Los Angeles Diagnostic Tests: Fundamentals of Arithmetic: Form I. Monterey, California: California Test Bureau, 1925.

2. Atkinson, R. C., and Hansen, D. N. "Computer-Assisted Instruction in Initial Reading: The Stanford Project." Reading Research Quarterly. II, 1966. p. 5-25.

3. Barthel, Joan. "Learn to Read: T.V. for Adults." New York Times. Sunday, March 18, 1962.

4. Betts, E. A.; and Welch, Carolyn M. Betts Basic Readers. New York: American Book Company, 1963.

5. Briggs, L. J., and Angell, D. "Programmed Instruction in Science and Mathematics," Review of Educational Research. XXXIV, June 1964. p. 354-73.

6. Bunger, Marianna. An Evaluation and Descriptive Study of Operation Alphabet in Florida. An unpublished doctoral dissertation. Florida State University, 1964.

7. Caldwell, M., and Smith, T. A. "Intellectual Structure of Southern Negro Children," Perceptual and Motor Skills. In press.

8. Coulson, J. E., and Cogswell, J. F. "Effects of Individual Instruction on Testing," Journal of Educational Measurement. II, 1965, 59-64.

9. Cox, R. C., and Graham, C. T. "The Development of a Sequentially Scaled Achievement Test," Journal of Educational Measurement. III, 1966, 147-150.

10. Division of Vocational, Technical and Adult Education. A Guide for Planning Special Vocational Programs for the Disadvantaged. State Department of Education, Tallahassee, Florida, July 1965. Bulletin 70H-13,p.2.

11. Dixon, W. J. BMD Biomedical Computer Programs. Health Sciences Computing Facility, Department of Preventive Medicine and Public Health, School of Medicine, University of California, Los Angeles, January 1, 1964.

12. Dolch, E. W. Graded Reading Difficulty Work Sheet. Champaign, Illinois: Garrard Publishing Company, 1960.

13. Fincher, P. W., and Fillmer, B. D. "Programmed Instruction in Elementary Arithmetic," The Arithmetic Teacher. XII, January 1965. p. 19-23.

14. Gagne, R. M. "Factors in Acquiring Knowledge of a Mathematical Task," Psychological Monographs. LXXVI, 1962, No. 526.

15. Glaser, R. "Instructional Technology and the Measurement of Learning Outcomes, Some Questions," American Psychologist. XVIII, 1963. p. 519-521.

16. Goss, V. "A New Approach to Reading," Journal of Programmed Reading. April 1964. p. 1-3.

17. Gray, W. L. "South Carolina's Opportunity School," Journal of Adult Education. October 1932. p. 454-58.

18. Gray, W. S. "How Well Do Adults Read? Adult Reading: Fifty-fifth Yearbook of the National Society for the Study of Education. Chicago: University of Chicago Press, 1956. p. 51.

19. Gray, W. S. The Teaching of Reading and Writing. New York: UNESCO and Scott Foresman and Co., 1956. Chapter 5.

20. Green, R. G. "Preliminary Studies of Initial Reading Instruction for Disadvantaged Children Using Computer-Assisted Instruction," Presented at the Southeastern Psychological Association. Atlanta, April 1967.

21. Guilford, J. P. Fundamental Statistics in Psychology and Education. New York: McGraw-Hill, 1965.

22. Heimer, R. T. "Designs for Future Exploration in Programmed Instruction," The Mathematics Teacher. XXIX, 1966. p. 110-114.

23. Higgins, R. O., and Rusch, D. S. "Remedial Teaching of Multiplication and Division: Programmed Text versus Workbook: A Pilot Study," The Arithmetic Teacher. XII, January 1965. p. 32-38.

24. Howle, C., et al., Army Training of Illiterates in World War II. New York: Bureau of Publications, Teacher's College, Columbia University, 1951.

25. Lorge, I., and Thorndike, E. L. A Semantic Count of English Words. New York: Bureau of Publications, Teacher's College, Columbia University, 1938.

26. McCracken, G., and Walcutt, C. C. Basic Reading. New York: J. B. Lippincott Company, 1963.

27. Maher, D. Computer-Based Instruction (CBI): Introduction to the IBM Research Project, RC1114. Yorktown Heights, New York: IBM, March 1964.

28. May, K. O. Programmed Learning and Mathematical Education: A CEM Study. Mathematical Association of America, 1965.

29. May, K. O. "Programming and Automation," The Mathematics Teacher. V, 1966. p. 444-454.

30. Middlemas, V., Feld and Ragger. Structural Analysis I. New York: The Center for Programmed Instruction, 1961. (mimeo)

31. National Association for Public School Adult Education. Technique . V. October 1964.

32. Noall, P. "Automated Instruction in English," Journal of Education. III, February 1961, 143.

33. Otley, H. W. "Illiteracy in the CCC Camps," School and Society. XLII, December 1935. p. 868-869.

34. Raygor, A. L. Behavioral Analysis: The New Look in Reading Research. The Philosophical and Sociological Basis of Reading: Fourteenth Yearbook of the National Reading Conference. 1965. p. 224-36.

35. Redbird, Helen. "Individualizing Arithmetic Instruction," The Arithmetic Teacher. XI, 1964. p. 348-349.

36. Robinson, Helen M., Monroe, Marion, and Artley, A. S. The New Basic Readers. Chicago: Scott Foresman and Company, 1963.

37. Schurdak, J. J. "An Approach to the Use of Computers in the Instructional Process on Evaluation," American Educational Research Journal. IV, 1967. p. 59-73.

38. Shuford, E. H. Cybernetic Testing. Presented to the National Society for Programmed Instruction. Philadelphia, Pa.: 1965.

39. Stewart, Cora W. Moonlight Schools. New York: E. P. Dutton and Co., 1922.

40. Suppes, P., Hyman, L., and Jerman, M. Linear Structural Models for Response and Latency Performance in Arithmetic. Technical Report No. 100. Institute for Mathematical Studies in the Social Sciences. Stanford University, Stanford, California. July 29, 1966.

41. Suppes, P., Jerman, M., and Groen, G. "Arithmetic Drills and Review on a Computer-Based Teletype." The Arithmetic Teacher. XIII, 1966. p. 303-309.

42. Swanson, J. R. Coursewriter for CAI: A Text to Accompany the Computer-Assisted Instruction Course fsucw. Florida State University, Tallahassee, Florida, 1966.

43. Thurstone, Thelma G. Primary Mental Abilities. Chicago: Science Research Associates, Inc., 1962.

44. Torgerson, W. S. Theory and Methods of Scaling. New York: John Wiley and Sons, Inc., 1958.

45. Townsend, Agatha. "What Research Says to the Reading Teacher," Reading Teacher. XVII, January 1964. p. 273-274.

46. United States Department of Labor, Manpower Development and Training Act: Report of the Secretary of Labor. Washington, D. C. March 1965. p.64.

47. United States Department of Labor, Manpower Development and Training Act: Report of the Secretary of Labor. Washington, D. C. February 1963. p. 58.

48. United States Department of Labor. Manpower Research and Training: Report of the Secretary of Labor. Washington, D. C. February 1964. p. 70.

49. United States Department of Labor, Office of Manpower, Automation and Training. Training Disadvantaged Groups. Manpower Evaluation Report Number 1. Washington, D. C. November 1963. p. 20.

50. United States Office of Education, Department of Health, Education and Welfare. Training the Hard-Core Unemployed. OE-13027. Cooperative Research Monograph No. 13, Washington, D. C. 1964. p. 44, 68.

A Glossary of Codes Used in the Arithmetic (Appendix A) and Reading (Appendix C) Programs*

*Reprinted from Coursewriter for CAI by James R. Swanson by permission of James R. Swanson. Copyrighted 1966.

GLOSSARY

I. Operation code. A mnemonic code which specifies some computer activity to be associated with a course statement.

A. Major operation code. Major operation codes are always executed in the order in which they are encountered. When a major operation code is executed, all minor operation codes following it are executed. If a major operation code is encountered, but not executed, none of the minor operation codes following it will be executed.

1. rd. This operation causes the computer to type one or more lines of text to the student. The computer waits for the EOB signal before proceeding when typing is complete.

2. qu. This code is similar to rd in that one or more lines of text are typed to the student. The machine expects the student to enter some response before giving EOB; i.e., the answer to the question.

3. qun. Null question; if not the proceeding, do the following; that is, it calls for the next instruction in the sequence.

4. ca. This code identifies a correct answer which the author has constructed. A comparison is made between the ca text and the text input by the student in response to a qu. If an exact match is made, all minor operation codes following the ca are executed, and the program then proceeds to the next rd or qu in the sequence.

5. cb. This code identifies an alternate correct response to a qu. It follows the primary correct response,the ca. A cb causes the same machine response as its associated ca. The cb is used only following a ca--never by itself.

6. wa. This operation code is analogous to the ca, except that it identifies an anticipated wrong answer. When a student response matches a wa text, all associated minor operation codes are executed. The student is then given another chance at the question, unless the program logic takes him to another place.

7. wb. The wb bears the same relation to the wa as does the cb to the ca.

8. un. The text accompanying a un code is typed out whenever a student gives an unanticipated response. Several un codes may be given; a series of unanticipated responses will cause the un text to be presented one after the other. The last un text will be re-presented if more unanticipated responses are given than there are un texts; however, a maximum of ten un's is permitted. If more than ten unanticipated responses are made, the tenth un text will be presented over and over. It should be noted that program logic can prevent this occurrence.

B. Minor operation code. Minor operation codes must be executed following a major operation code. If the major operation code preceeding a minor operation code is not executed, the minor operation code will not be executed.

1. br. This code causes a branch, or jump, to another part of the program. The br may be conditional, that is, dependent upon some condition which the program can test.

2. ad. This operation code causes some quantity, specified by the programmer, to be added to one of the ten counters available. The quantity added may be a negative number which in effect permits subtraction as well.

3. ty. This operation code causes the associated operand (text) to be typed out to the student. As soon as the text is typed, the program proceeds to the next operation code in the sequence.

4. fn. This operation code causes the execution of a prewritten sequence of instructions which operate upon data available to the program. This operation is not strictly relevant to the planned sequence of presentation, since the functions are mainly used to perform data manipulation on the responses input by the student.

a. save. The save function allows the storage of data provided by the author in the counters. This data is specified in the teaching program itself.

b. editls//all. This function edits the student response by removing the specified functional characters.

c. char//yxx. This function allows the author to restrict comparison to the first or last portion of the response entered by the student.

d. brif. This function allows a branch if the rest of the command is functioning.

e. kl//x. This function, key letter, allows a comparison of a portion of a student response, but allows more flexibility than char//yxx. The function performs a character-sequence check: that is, the student response is examined character by character, to see if it contains the same sequence of characters as the ca/wa text it follows. The course author may also specify a number of words to be matched before the function is satisfied. (Word here means any sequence of characters bounded by blanks and/or EOB.) In this format, x indicates the minimum number of words which must be matched before the preceeding ca/wa is considered matched.

f. //ssoox//. Positions the slide carousal to zero.

g. //ptx//. Play tape x.

h. //ssxxx//. Position slide x without showing it.

i. //ssxx//. Show slide x.

II. EOB. This signal gives control to the computer for some specified operations.

III. Delimiter (//). CAI uses the double slash as a means of separating certain data fields in the text.

IV. Counters

A. cx. A counter is an area in machine memory which may be used for accumulating or storing data. These counters may be used singly or in combination for this purpose. The data stored in the counters may be either numeric or alphabetic, and may be used as the basis for logical decisions in the course sequencing. In order to provide a one-digit identification for each of the counters, they are numbered from zero to nine, and are referred to as c0, c1, ..., c9. The counters may be

pictured as a string of ten boxes, each of which contains three compartments. The box on the left is c0 and the box on the right is c9.

B. cx, p, n. If more or less than three characters are to be stored or accumulated, the author must specify the counter and the compartment in which the righthand character is to be placed, as well as the number of characters involved. Here, n specifies the number of characters, and p is the position (hundreds, tens, or units) of counter x into which the rightmost character will be placed.

APPENDIXES

APPENDIX A

A Sample of the Arithmetic Program

Lesson 10: Borrow Once

```
test10a
   1          rd The TIME is now:
   2          ty
   3          ty c1
   4          ty //dc//c1
   5          ty c2
   6          ty //dc//c2
   7          ty c3
   8          ty //dc//c3
   9          ty c4
  10          ty //dc//c4
  11          ty c5
  12          ty //dc//c5
  13          ty
  14          ad -c1//c1
  15          ad -c2//c2
  16          ad -c3//c3
  17          ad -c4//c4
  18          ad -c5//c5
  19          rd Test10a

                 You are now ready for some more difficult
                 problems.  Enter EOB and we will begin.

t10aqu1
   1          qu

                 ?     41
                     - 5

   2          ca 36
   3          ad 1//c1
   4          ty
                 RIGHT!!

   5          un
                 WRONG.  36 is RIGHT!!

   6          br t10aqu2
t10aqu2
   1          qu

                 ?     7715
                     -3242
```

```
 2          ca 4473
 3          ad 1//cl
 4          ty
               RIGHT!!

 5          un
               WRONG.  4473 is RIGHT!!

 6          br tl0aqu3
tl0aqu3
 1          qu

               ?     92
                    -57

 2          ca 35
 3          ad 1//cl
 4          ty
               RIGHT!!

 5          un
               WRONG.  35 is RIGHT!!

 6          br tl0aqu4
tl0aqu4
 1          qu

               ?     5267
                   -  75

 2          ca 5192
 3          ad 1//cl
 4          ca aaa
 5          fn kl          //0
 6          qu

               ?     52440
                   - 1190

 7          ca 51250
 8          ad 1//cl
 9          ca aaa
10          fn kl          //0
11          qu
```

```
                ?     91
                     -15

12          ca 76
13          ad 1//c1
14          ca aaa
15          fn k1          //0
16          qu

                ?     438
                     -365

17          ca 73
18          cb 073
19          ad 1//c1
20          ca aaa
21          fn k1          //0
22          qu

                ?     3720
                     - 411

23          ca 3309
24          ad 1//c1
25          ca aaa
26          fn k1          //0
27          qu

                ?     21916
                     -     8

28          ca 21908
29          ad 1//c1
30          ca aaa
31          fn k1          //0
32          qu

                ?     966
                     -774

33          ca 192
34          ad 1//c1
35          br test1la    //10//-c1
36          br t10aqu11   //6//-c1
37          br t10verdri1//c8//-3
```

```
 38          br tl0drill
 39          un
 40          br tl0aqull  //6//-c1
 41          br tl0verdril//c8//-3
 42          br tl0drill
tl0aqull
  1          qu

                ?     72
                     -64

  2          ca 8
  3          cb 08
  4          ad 1//c2
  5          ca aaa
  6          fn k1        //0
  7          qu

                ?    872
                     -  6

  8          ca 866
  9          ad 1//c2
 10          ca aaa
 11          fn k1        //0
 12          qu

                ?   4870
                    -1133

 13          ca 3737
 14          ad 1//c2
 15          ca aaa
 16          fn k1        //0
 17          qu

                ?   7311
                   -3510

 18          ca 3801
 19          ad 1//c2
 20          ca aaa
 21          fn k1        //0
 22          qu
```

```
?      4183
     -   91

23        ca 4092
24        ad 1//c2
25        ca aaa
26        fn kl        //0
27        qu

?      94588
     -36332

28        ca 58256
29        ad 1//c2
30        ca aaa
31        fn kl        //0
32        qu

?      42
     -  3

33        ca 39
34        ad 1//c2
35        ca aaa
36        fn kl        //0
37        qu

?      36130
     -   21

38        ca 36109
39        ad 1//c2
40        ca aaa
41        fn kl        //0
42        qu

?      65289
     -  423

43        ca 64866
44        ad 1//c2
45        ca aaa
46        fn kl        //0
```

```
47          qu

                ?     826
                     -673

48          ca 153
49          ad 1//c2
50          br testlla   //10//-c2
51          ad c1//c5
52          ad c2//c5
53          br testlla   //18//-c5
54          br tl0verdril//c8//-3
55          br tl0drill
56          un
57          ad c1//c5
58          ad c2//c5
59          br testlla   //18//-c5
60          br tl0verdril//c8//-3
61          br tl0drill
tl0verdril
 1          rd The TIME is now:
 2          ty
 3          ty c1
 4          ty //dc//c1
 5          ty c2
 6          ty //dc//c2
 7          ty c3
 8          ty //dc//c3
 9          ty c4
10          ty //dc//c4
11          ty c5
12          ty //dc//c5
13          ty
14          ad -c1//c1
15          ad -c2//c2
16          ad -c3//c3
17          ad -c4//c4
18          ad -c5//c5
19          qu You are not borrowing correctly.  Subtraction
20             always involves taking a small digit on the
21             bottom away from a large digit on the top.
               For example 6 take away 3 is __?

22          ca 3
```

23 ty
RIGHT!!

24 un
25 ty
WRONG. 6 take away 3 is 3.

26 qu When we take 3 away from 6 it is written 6.
-3

27 If we took 4 away from 5, how would it look?
(Type the letter that is in front of the
right answer.)

28 a. 4 b. 5 c. 4 d. 5
29 -5 -4 -4 -5

30 ca b
31 ty Right! Very good-you must always remember
that the larger number must be on top.
32 un Wrong - you must always have the larger
number on top. Try again.
33 rd You can never take a large digit away from
34 a smaller one. For example, you cannot take
6 away from 2 in the same way that you
35 cannot take 6 apples away from a man who
has only 4 apples. Could you take away 7
36 apples from a man who has only 3? (Type
yes or no and then push EOB.)

37 ty
You cannot take away 7 apples from a man
38 who only has 3. Where would you get them?
(Don't answer that.)

39 qu When working with large numbers like: 47
-36

40 each number on top is larger than the
number underneath it. (4 is bigger than 3,
41 and 7 is bigger than 6). we should have no
trouble subtracting. The answer to this
42 problem is ____?

43 ca 11

44 ty
RIGHT!! 11 is the answer.

45 un
Wrong. You should be able to solve this type of problem by now, so try it again.

46 un WRONG. 11 is the answer. Try again.

47 qu If the numbers on top are smaller than the
48 numbers underneath them, as in 42 (where 2
-36

49 is smaller than 6), you cannot subtract until you go through the process of "borrowing."

50 In which of the following problems must you borrow?

51 a. 15 b. 530 c. 53 d. 99
- 2 -410 -18 -99

52 ca c
53 ty
Right!! You must "borrow" in this problem because the 3 is smaller than the 8.

54 un Wrong!! - Remember, you must borrow whenever a number on top is smaller than the number underneath it. Now look through these
55 answers and see if you can find any place where a number on top is smaller than the number below it.

56 Then type in the letter of that answer.

57 un Wrong!! - Try again.

58 qu The following is an explanation of "borrowing."
59 42 when it is broken down, is really the same
-36

as 40 and 2
60 -30 and 6

61 Can you subtract the 6 from the 2? (Type yes or no.)

62 ca no

63 ty

Right!! You cannot take 6 away from 2, so we must borrow in this problem.

64 wa yes

65 ty

Wrong. You cannot take 6 away from 2. Try again.

66 un

Just type yes or no.

67 rd To make the 2 larger, we borrow 10 from the 40 and add it to the 2. Push EOB and we will show you how this is done.

68 qu

```
 ~~4~~0   10
        + 2
```

69 Since we borrowed 10 from the 40, it becomes 30. When we add this 10 to the 2, we get __?

70 ca 12

71 ty

Right!! 10 + 2 = 12

72 un

Wrong. 10 + 2 = 12. Type in 12 and we will go on.

73 rd

```
                30
like this:  ~~4~~0 and 12.  The whole problem
then ends up:
```

74

```
 30
 ~~4~~0  and  12
-30  and   6
```

75 Now each number on top is larger than the
76 number beneath it, and we can subtract. This process is called "borrowing."

77 Push EOB and we will give you some practice problems.

78 qu

? 41
-38

79 ca 3
80 ty
RIGHT!!

81 un
Wrong. Check your work carefully and try again.

82 un
WRONG. 3 is RIGHT!! Try again.

83 qu

? 44
-29

84 ca 15
85 ty
RIGHT!!

86 un
Wrong. Check your work carefully and try again.

87 un
WRONG. 15 is RIGHT!! Try again.

88 qu

? 87
-78

89 ca 9
90 ty
RIGHT!!

91 un
Wrong. Check your work carefully and try again.

92 un
WRONG. 9 is RIGHT!! Try again.

93 qu

? 24
-15

94 ca 9
95 ty
RIGHT!!

96 un
Wrong. Check your work carefully and try again.

97 un
WRONG. 9 is RIGHT!! Try again.

98 qu

? 98
-19

99 ca 79
100 ty
RIGHT!!

101 Now we will go on with a little more difficult type of subtraction problem.

102 un
Wrong. Check your work carefully and try again.

103 un
WRONG. 79 is RIGHT!! Try again.

104 qu If you have forgotten, remember that the 3 parts of a subtraction problem are called
105 the minuend (the number on top), the subtrahend
106 (the number below the minuend), and the difference (the answer).

107 For example: 452 - minuend
108 -231 - subtrahend
221 - difference

109 When subtracting in problems that have fewer
110 digits in the subtrahend than in the minuend
111 (as in 14 or 14783) the answer is found
- 3 - 74

112 in the same way as in problems which have the
same number of digits in both the minuend and
113 the subtrahend. The answer to the first
problem 14 is ____?
- 3

114 ca 11
115 ty
RIGHT!! 11. Good.

116 un
WRONG. The answer is 11. Try again.

117 qu The answer to the second problem 14783
is ____? - 74

118 ca 14709
119 ty
RIGHT!! Very good. You seem to understand
120 this type of problem so we will skip any
121 further explanation and just give you some
practice problems before going on.

122 br t10verdrb
123 un
WRONG. The answer is 14709. It looks like
124 this may be your trouble in subtraction.
You are forgetting that having a blank under
125 the minuend is the same as having a zero under
the minuend.

126 br t10verbdra
t10verbdra
1 rd Since any number has the same value when zeros
2 are put in front of it (05 means the same
thing as just plain 5), we can use these zeros
3 to make all subtraction problems in which the
subtrahend has fewer digits than the minuend
4 into problems with an equal number in both.

5 For example:

6 1498 1498
7 - 89 can be made into -0089 and it will

8 still be the same problem.

9 So to solve it, all we have to do is subtract
10 the same way as you would in any other problem.

11 We borrow a 10 from the 9 (which is really
90, remember?) and add it to the 8.
12 This makes the problem into:

13

```
        8
 1  4  ~~9~~ 18
-0  0  8   9
```

14 Now we subtract in the usual way. 18 take
away 9 leaves 9.

15

```
        8
 1  4  ~~9~~ 18
-0  0  8   9
            9
```

16 8 take away 8 leaves 0.

17

```
        8
 1  4  ~~9~~ 18
-0  0  8   9
       0   9
```

18 4 take away nothing is still 4.

19

```
        8
 1  4  ~~9~~ 18
-0  0  8   9
   4  0   9
```

20

21 and finally, 1 take away 0 is still 1.

22

```
        8
 1  4  ~~9~~ 18
-0  0  8   9
 1  4  0   9
```

23

24 Enter EOB when you are ready to go on.

25 qu Where would you need to add zeros in <u>this</u>
problem so that there are an equal number
26 of digits in both the top and the bottom?

27
```
 5  4  8
-      2
```

28 a. two zeros behind the 2
29 b. two zeros in front of the 2
30 c. one zero in front of the 5
31 d. one zero in front of the 2

32 Type the <u>letter</u> of the right answer.

33 ca b
34 cb B
35 un
WRONG. Just put two zeros in front of
the 2 like this:

36
```
 5  4  8
-0  0  2
```

37 un
WRONG. Just put zeros in front of the 2
like this:

38
```
 5  4  8
-0  0  2
```
Try again.

39 rd You see, any problem that has more digits in
the minuend than it does in the subtrahend
40 can be made into a problem with the same
number of digits in both, just by adding
41 zeros in front of the subtrahend. After a
while you will just remember in your head
42 that there are zeros in front of the bottom
43 number, and you won't have to write them down.

44 Here are some practice problems. Remember,
all you have to do is add zeros in front of
45 the bottom humber and then work it like any
46 other subtraction problem.

```
 47              Enter EOB when you are ready to go on.

t10verdrb
  1          qu

                ?     73322
                     - 4301

  2          ca 69021
  3          ty
                RIGHT!!

  4          un
                Wrong.  Check your work carefully and try again.

  5          un
                WRONG.  69021 is RIGHT!!  Try again.

  6          qu
                ?     314
                     - 20

  7          ca 294
  8          ty
                RIGHT!!

  9          un
                Wrong.  Check your work carefully and try again.

 10          un
                WRONG.  294 is RIGHT!!  Try again.

 11          qu

                ?     44444
                     -  504

 12          ca 43940
 13          ty
                RIGHT!!

 14          un
                Wrong.  Check your work carefully and try again.

 15          un
                WRONG.  43940 is RIGHT!!  Try again.
```

```
16          qu

               ?     9741
                   -   2

17          ca 9739
18          ty
               RIGHT!!

19          un
               Wrong.  Check your work carefully and try again.

20          un
               WRONG.  9739 is RIGHT!!  Try again.

21          qu

               ?     8050
                   -  39

22          ca 8011
23          ty
               RIGHT!!

24          br test10b
25          un
               Wrong.  Check your work carefully and try again.

26          un
               WRONG.  8011 is RIGHT!!  Try again.

t10drill
 1          rd The TIME is now:
 2          ty
 3          ty c1
 4          ty //dc//c1
 5          ty c2
 6          ty //dc//c2
 7          ty c3
 8          ty //dc//c3
 9          ty c4
10          ty //dc//c4
11          ty c5
12          ty //dc//c5
13          ty
```

```
14          ad -c1//c1
15          ad -c2//c2
16          ad -c3//c3
17          ad -c4//c4
18          ad -c5//c5
19          rd

               You need some practice in subtraction
               with borrowing.  For these problems you
               will be told if you are RIGHT!!

20             You will be given a chance to try again
               if you are wrong.  Please enter EOB.

t10dr1
 1          qu

               ?     93
                    -28

 2          ca 65
 3          ty
               RIGHT!!

 4          un
               Wrong.  Check your work carefully and try again.

 5          un
               WRONG.  65 is RIGHT!!  Try again.

 6          qu

               ?     22
                    -15

 7          ca 7
 8          cb 07
 9          ty
               RIGHT!!

10          un
               Wrong.  Check your work carefully and try again.

11          un
               WRONG.  7 is RIGHT!!  Try again.
```

12 qu

```
?     72
     -53
```

13 ca 19
14 ty
RIGHT!!

15 un
Wrong. Check your work carefully and try again.

16 un
WRONG. 19 is RIGHT!! Try again.

17 qu

```
?     56
     -39
```

18 ca 17
19 ty
RIGHT!!

20 un
Wrong. Check your work carefully and try again.

21 un
WRONG. 17 is RIGHT!! Try again.

22 qu

```
?     32
     -29
```

23 ca 3
24 cb 03
25 ty
RIGHT!!

26 un
Wrong. Check your work carefully and try again.

27 un
WRONG. 3 is RIGHT!! Try again.

28 qu

```
?     41
     -38
```

29 ca 3
30 cb 03
31 ty
RIGHT!!

32 un
Wrong. Check your work carefully and try again.

33 un
WRONG. 3 is RIGHT!! Try again.

34 qu

```
?     44
     -29
```

35 ca 15
36 ty
RIGHT!!

37 un
Wrong. Check your work carefully and try again.

38 un
WRONG. 15 is RIGHT!! Try again.

39 qu

```
?     87
     -78
```

40 ca 9
41 cb 09
42 ty
RIGHT!!

43 un
Wrong. Check your work carefully and try again.

44 un
WRONG. 9 is RIGHT!! Try again.

```
45          qu

               ?     24
                    -15

46          ca 9
47          cb 09
48          ty
               RIGHT!!

49          un
               Wrong.  Check your work carefully and try again.

50          un
               WRONG.  9 is RIGHT!!  Try again.

51          qu

               ?     98
                    -19

52          ca 79
53          ty
               RIGHT!!

54          un
               Wrong.  Check your work carefully and try again.

55          un
               WRONG.  79 is RIGHT!!  Try again.

t10drll
  1         qu

               ?     1435
                   -   18

  2         ca 1417
  3         ty
               RIGHT!!

  4         un
               Wrong.  Check your work carefully and try again.

  5         un
               WRONG.  1417 is RIGHT!!  Try again.
```

6 qu

```
?     2478
    - 39
```

7 ca 2439
8 ty
RIGHT!!

9 un
Wrong. Check your work carefully and try again.

10 un
WRONG. 2439 is RIGHT!! Try again.

11 qu

```
?     9742
    - 151
```

12 ca 9591
13 ty
RIGHT!!

14 un
Wrong. Check your work carefully and try again.

15 un
WRONG. 9591 is RIGHT!! Try again.

16 qu

```
?     74
    - 9
```

17 ca 65
18 ty
RIGHT!!

19 un
Wrong. Check your work carefully and try again.

20 un
WRONG. 65 is RIGHT!! Try again.

```
21          qu

               ?     22395
                   - 109

22          ca 22286
23          ty
               RIGHT!!

24          un
               Wrong.  Check your work carefully and try again.

25          un
               WRONG.  22286 is RIGHT!!  Try again.

26          qu

               ?     73322
                   - 4301

27          ca 69021
28          ty
               RIGHT!!

29          un
               Wrong.  Check your work carefully and try again.

30          un
               WRONG.  69021 is RIGHT!!  Try again.

31          qu

               ?     314
                   - 20

32          ca 294
33          ty
               RIGHT!!

34          un
               Wrong.  Check your work carefully and try again.

35          un
               WRONG.  294 is RIGHT!!  Try again.
```

36 qu

```
?     44444
    -   504
```

37 ca 43940

38 ty

RIGHT!!

39 un

Wrong. Check your work carefully and try again.

40 un

WRONG. 43940 is RIGHT!! Try again.

41 qu

```
?     9741
    -    2
```

42 ca 9739

43 ty

RIGHT!!

44 un

Wrong. Check your work carefully and try again.

45 un

WRONG. 9739 is RIGHT!! Try again.

46 qu

```
?     8050
    -   39
```

47 ca 8011

48 ty

RIGHT!!

49 br test10b

50 un

Wrong. Check your work carefully and try again.

51 un

WRONG. 8011 is RIGHT!! Try again.

```
test10b
   1          rd The TIME is now:
   2          ty
   3          ty c1
   4          ty //dc//c1
   5          ty c2
   6          ty //dc//c2
   7          ty c3
   8          ty //dc//c3
   9          ty c4
  10          ty //dc//c4
  11          ty c5
  12          ty //dc//c5
  13          ty
  14          ad -c1//c1
  15          ad -c2//c2
  16          ad -c3//c3
  17          ad -c4//c4
  18          ad -c5//c5

  19          rd test10b

                 You have finished the practice problems.  Now
                 you will try another test.  Please enter EOB.

t10bqu1
   1          qu

                 ?     68
                      -59

   2          ca 9
   3          ad 1//c1
   4          ty
                 RIGHT!!

   5          un
   6          ty
                 WRONG.  9 is RIGHT!!

   7          br t10bqu2
```

```
t10bqu2
   1          qu

                 ?     982
                     - 47

   2          ca 935
   3          ad 1//c1
   4          ty
                 RIGHT!!

   5          un
   6          ty
                 WRONG.  935 is RIGHT!!

   7          br t10bqu3
t10bqu3
   1          qu

                 ?     6434
                     -  15

   2          ca 6419
   3          ad 1//c1
   4          ty
                 RIGHT!!

   5          un
   6          ty
                 WRONG.  6419 is RIGHT!!

   7          br t10bqu4
t10bqu4
   1          qu

                 ?     73532
                     -52362

   2          ca 21170
   3          ad 1//c1
   4          ca aaa
   5          fn k1        //0
   6          qu
```

```
                ?      96
                     - 7

 7          ca 89
 8          ad 1//cl
 9          ca aaa
10          fn kl          //0
11          qu

                ?     718
                     -166

12          ca 552
13          ad 1//cl
14          ca aaa
15          fn kl          //0
16          qu

                ?    9439
                    -3618

17          ca 5821
18          ad 1//cl
19          ca aaa
20          fn kl          //0
21          qu

                ?   87345
                    - 8142

22          ca 79203
23          ad 1//cl
24          ca aaa
25          fn kl          //0
26          qu

                ?     85
                     -48

27          ca 37
28          ad 1//cl
29          ca aaa
30          fn kl          //0
```

```
 31          qu

                ?     283
                    -   5

 32          ca 278
 33          ad 1//c1
 34          br testlla    //10//-c1
 35          br t10bqull   //6//-c1
 36          br t10verdril//c8//-3
 37          br t10drill
 38          un
 39          br t10bqull   //6//-c1
 40          br t10verdril//c8//-3
 41          br t10drill
t10bqull
  1          qu

                ?     9235
                    -2182

  2          ca 7053
  3          ad 1//c2
  4          ca aaa
  5          fn k1         //0
  6          qu

                ?     61926
                    -   445

  7          ca 61481
  8          ad 1//c2
  9          ca aaa
 10          fn k1         //0
 11          qu

                ?     45
                    - 8

 12          ca 37
 13          ad 1//c2
 14          ca aaa
 15          fn k1         //0
```

```
16          qu

               ?      528
                     -264

17          ca 264
18          ad 1//c2
19          ca aaa
20          fn kl          //0
21          qu

               ?     2272
                     - 551

22          ca 1721
23          ad 1//c2
24          ca aaa
25          fn kl          //0
26          qu

               ?    94446
                   -13831

27          ca 80615
28          ad 1//c2
29          ca aaa
30          fn kl          //0
31          qu

               ?      47
                     -28

32          ca 19
33          ad 1//c2
34          ca aaa
35          fn kl          //0
36          qu

               ?     881
                     -  3

37          ca 878
38          ad 1//c2
39          ca aaa
40          fn kl          //0
```

```
41          qu

               ?     5932
                   -   29

42          ca 5903
43          ad 1//c2
44          ca aaa
45          fn kl          //0
46          qu

               ?     56493
                   -32359

47          ca 24134
48          ad 1//c2
49          br testlla   //10//-c2
50          ad c1//c5
51          ad c2//c5
52          br testlla   //18//-c5
53          br t10verdril//c8//-3
54          br t10drill
55          un
56          ad c1//c5
57          ad c2//c5
58          br testlla   //18//-c5
59          br t10verdril//c8//-3
60          br t10drill
```

APPENDIX B

Behavioral Objectives for the Reading Program

GRADE 2

Reading Objectives

I. Vocabulary

A. Visual similarity and recognition

1. Be able to recognize similarity in words as evidenced by having the student type the similar parts of words given as a written stimulus.

2. Be able to identify the word as evidenced by picking it out of several like words.

B. Word meaning

1. Be able to use context to find word meaning by having the student pick out of a group of meanings the one that fits the underlined word in a short paragraph.

2. To know the meanings of words as shown by matching the correct typed word with its meaning.

3. Be able to recognize homonyms and synonyms and antonyms and their meanings as evidenced by having the student pick out the correct homonyms, synonyms or antonyms for a word from a list.

II. Word Analysis Skills

A. Phonics

1. Be able to recognize all single consonant sounds in initial, final and medial positions as evidenced by having the student pick out the letter representing a consonant sound.

2. Be able to recognize the silent letter in consonant diagraphs as evidenced by having the student strike out the silent letters in a written stimulus word and by having the student add silent letters to make a new word from a written stimulus word.

3. Be able to recognize and use effectively consonant diagraphs and blends as evidenced by having the student underline the blend or diagraph in a written word stimulus; and by having the student add letters to the beginning of a word to make the word and then underline the consonant blend or diagraph; and by having the student spell correctly by filling in the missing spaces with blends or diagraphs.

4. Be able to recognize the short vowel sounds as evidenced by having the student type whether it is a short vowel after a written stimulus word is presented.

5. Be able to recognize long vowels as evidenced by having the student type the letter of the vowel in a stimulus word.

6. Be able to recognize adjacent vowel symbols of au, aw, oi and others as evidenced by having the student add a letter to a written stimulus word to change the sound of the first vowel.

B. Structural analysis

1. Be able to use structural analysis in attacking words, including use of prefixes and affixes as evidenced by having the student add these to the base words to syntasize a word appropriate to stimulus.

2. Be able to recognize word variants formed by adding letters to a known word as evidenced by having students add letters to appropriate words in a list and then matching these newly formed words to a list of meanings.

3. Be able to form plurals of nouns as evidenced by having the students perform this activity with a list of words and by having students give the original word from a list of plural words.

4. Be able to understand the use of the apostrophe as evidenced by having the student use the apostrophe in words in a sentence containing possessives and contractions.

5. To be able to recognize contractions by having students write after contractions the words that were joined to make them.

6. Being able to divide a word into syllables by having the new word typed out and the student retype in syllabic form, using dashes between the syllables.

7. Be able to recognize compound words as evidenced by having the student write the two words that make up the compound word, which is given as a written stimulus.

8. Be able to use simple punctuation and capitalization as evidenced by having the student punctuate and use capitalization in several sentences in which these have been omitted.

9. Be able to recognize root or base words as evidenced by having students write the base word having been given a written stimulus.

III. Comprehension

1. Be able to follow directions as evidenced by having students follow typed directions correctly.

2. Be able to recall simple factual material as shown by answering questions about a story.

3. Be able to comprehend sentences shown by students picking the meaning of the sentence out of a group of meanings.

4. Be able to select significant details as evidenced by having the student list details of a simple paragraph.

5. Be able to read and to verify information as evidenced by having the student answer true/false questions while rereading a paragraph.

6. Be able to recognize time sequence of events as evidenced by having a student list events in order of occurrence from a story or paragraph.

7. Begin to think critically as evidenced by answering correctly inference and fact versus opinion questions about a selection read.

IV. Study Skills and Dictionary Usage

1. Be able to recognize the title and table of contents of a book by having the students answer specific questions about a series of sample book pages.

2. Be able to use the alphabet to locate words in the dictionary as evidenced by having the students locate information about a stimulus word and type it.

3. Be able to alphabetize words with the same two beginning letters as evidenced by having the student alphabetize a list of words typed out to him.

GRADE 3

Reading Objectives

I. Vocabulary

A. Word recognition

1. Be able to identify word as evidenced by having students pick it out of several like words given.

B. Word meaning

1. To be able to understand word meanings as evidenced by having students match words with meanings.

2. To be able to identify root words as evidenced by having students underline base words from a list of derived forms or words.

3. To be able to recognize descriptive words and phrases in tagnemic structures as evidenced by having students answer multiple-choice questions about their meaning.

4. To be able to use antonyms, homonyms, and synonyms as evidenced by having students write an antonym, homonym or synonym for an underlined word in a stimulus sentence.

5. To be able to classify and label certain objects or words as evidenced by having the student place words under certain headings.

II. Word Analysis Skills

A. Phonics

1. To be able to recognize all initial, medial, and final consonant sounds as evidenced by having the student pick out the letter representing a consonant sound of a word given.

2. Be able to recognize the variant sounds of c; c followed by i, e, a, o, and u.

3. To be able to recognize the silent letter in consonant diagraphs as evidenced by having the student strike out the silent letters in a written stimulus word.

4. Be able to recognize consonant blends and diagraphs as evidenced by having the student add letters to the beginning of a word to make the word and then underline the consonant blend or diagraph used.

B. Structural analysis

1. To be able to recognize additional prefixes and suffixes as evidenced by having students affix them to base words in order to make new words.

2. To be able to syllabicate words of two or more syllables as evidenced by having students make a dash between the syllables.

3. To be able to form plurals as evidenced by having students add endings to singular forms chosen from word lists; i.e. changing f to v and adding es.

4. Be able to read and recognize all contractions as evidenced by having students underline the contraction after having been given a written stimulus of the two words used in forming the contraction.

5. Be able to recognize compound words as evidenced by having students pick out the compound words used in short paragraphs and by having students divide the compound word into its two component parts.

6. Be able to identify root words as evidenced by having students write the common root word of a group of words given as a written stimulus.

7. Be able to form and use possessives as evidenced by having students supply the possessive form for stimulus words underlined in a sentence.

III. Comprehension

1. To be able to understand the literal meaning of a paragraph as evidenced by having students answer questions... who, what, when and where.

2. To be able to understand implied meanings in paragraphs as evidenced by having students select from three possible answers the one that best answers the question.

3. To be able to draw conclusions as evidenced by having students supply one-two-three word answers to questions asked about selections.

4. To be able to follow ideas in time sequence as evidenced by having students rearrange statements.

5. To be able to understand cause-effect relationship as evidenced by having students match "what" statements with "why" statements.

6. To be able to increase skimming ability as evidenced by having students read passages and then answer questions relating to the topic read.

7. Be able to find the main idea of a paragraph or story as evidenced by having the student choose the correct statement from a group of statements given as a written stimulus.

8. Be able to predict outcomes as evidenced by having students choose the sentence which supplies the best ending from a group of endings given as a written stimulus.

9. Be able to follow directions as evidenced by having students follow typed directions correctly.

IV. Study Skills and Dictionary Usage

1. To be able to find dictionary information about words as evidenced by having students look up word meanings and information for written stimulus questions.

GRADE 4

Reading Objectives

I. Vocabulary

A. Word recognition

1. To be able to identify a new word by picking it out of several like words having been given an oral stimulus or a picture clue.

2. To be able to pick out the like sounds in words by having the student give the letter or letters representing the sound found in several words.

B. Word meaning

1. To know the literal meanings of words by having to match the meaning of a word with the word itself.

2. Be able to interpret words of multiple meanings as evidenced by having the student choose the correct meaning from a list that corresponds to a sentence in which the word is used.

3. Be able to determine the meaning of words in context as tested by having the student look at certain words underlined in the story and choose the correct meaning for those words from a list of meanings.

4. To be able to select descriptive and figurative words and phrases as evidenced by having students underline these statements in the selection.

5. Be able to use and recognize antonyms, synonyms, and homonyms as evidenced by having the student pick out of a list the antonym, synonym or homonym for a word and also give an antonym, synonym, and homonym for a word given as a written stimulus.

6. Be able to begin to label abstract concepts, ideas, etc. as evidenced by having the students type a label name for an oral stimulus and by having students list under certain headings all words belonging to that classification.

7. Be able to form and recognize compound words as evidenced by having students make compound words out of two words given in a written list and by having students write compound words used in a paragraph or story.

II. Word Analysis Skills

A. Phonics

1. To be able to discriminate initial, medial and final consonant sounds as evidenced by having the student pick out the letters a word begins and ends with when given an oral stimulus.

2. Be able to recognize and use short and long vowel sounds as evidenced by having students fill in the missing vowel for a word given as a written stimulus.

3. Be able to recognize and use vowel teams as evidenced by having students fill in the missing letters of a word seen as a written stimulus and by having students underline the vowel teams in words after being presented with an oral stimulus.

4. Be able to recognize all consonant blends and diagraphs as evidenced by having students underline the blend or diagraph in a written stimulus word and by having students fill in the blanks preceding a word with the appropriate diagraph blend.

B. Structural analysis

1. Be able to divide words into syllables as tested by giving the student a word in a written stimulus and having the student divide the word into syllables.

2. Be able to understand prefixes and suffixes and their meanings as evidenced by having the student match the correct meaning with the appropriate prefix and suffix and by having the student make new words by adding prefix or suffix to a word given as a written stimulus.

3. Be able to pick out the root of a word as tested by having the word typed out and having the student type the root.

4. Be able to recognize and make hyphenated words as evidenced by having students choose words to hyphenate taken from a written list and by having students underline hyphenated words used in tagnemic structures.

5. Be able to recognize plural forms of words and make words plural as evidenced by having students add endings to a word.

6. Be able to use and recognize contractions as evidenced by having students write the contractions for appropriate words.

7. Be able to use simple punctuation, as evidenced by having students punctuate tagnemic structures.

III. Comprehension

1. Be able to find key words in a sentence as evidenced by having the student pick the key words from a typed sentence.

2. Be able to organize ideas as evidenced by having the student list in order of importance the main ideas and subordinate details of a paragraph.

3. To be able to recognize time sequence of events by putting in order a sequence of facts in a paragraph.

4. Be able to use maps, graphs, and charts, diagrams and tables as evidenced by showing the student one or more of the above and having the student answer correctly the comprehension questions related to it.

5. Be able to make inferences as evidenced by answering inference questions about a story.

6. Be able to recognize the "opinion-fact fallacy" of critical reading as evidenced by having the student choose from several tagnemic structures given as a written stimulus those that contain the fallacy.

7. Be able to recognize the "cocksure fallacy" of critical reading as evidenced by having the student pick from several tagnemic structures given as a written response those that contain the fallacy.

8. Be able to recognize the "false authority fallacy" in critical reading as evidenced by having the student pick from several tagnemic structures given as a written stimulus those that contain the fallacy.

9. Be able to adjust rate to purpose as evidenced by having the student read several types of paragraphs in certain time limits and answer correctly questions pertaining to the paragraphs.

10. Be able to skim as evidenced by showing the student material on a slide for a limited time and then having the student answer factual questions.

11 Be able to find the main idea of a tagnemic structure as evidenced by having students choose the best main idea from a group of written choices.

12. Be able to summarize a selection read as evidenced by having students write in a short sentence the ideas involved.

13. Be able to find details as evidenced by having students answer questions about specific information in a paragraph or story and by having students list facts to support a main idea given as a written stimulus.

14. Be able to see relationships as evidenced by having students answer questions concerned with "if this...that."

15. Be able to identify the mood of a reading selection as evidenced by having students choose the best statement out of several which indicate the mood of the selection.

16. Be able to identify the author's purpose as evidenced by having students choose the statement best indicating the purpose from a group of statements given as a written stimulus.

17. Be able to identify character traits as evidenced by having students choose the statement from a group of statements best describing a character.

18. Be able to fill in an outline form using Roman numerals and capital letters with main ideas and subordinate details taken from a story or factual article as evidenced by having students do the above.

19. Be able to read maps, graphs and charts as evidenced by having students answer specific questions given as a written stimulus concerning the above.

IV. Study Skills and Dictionary Usage

A. Dictionary usage

1. Be able to use the dictionary in finding little used word meanings as tested by having the student write the meaning of a word used in a sentence and then use the dictionary in finding out whether the meaning is a common or uncommon one.

2. Be able to alphabetize according to first four letters as evidenced by giving the student a list of words and having him put them into alphabetical order.

3. Be able to find guide words in the dictionary as evidenced by having the student write the guide words on the page where a certain word is found.

4. Be able to use the pronunciation key in learning to pronounce new words as evidenced by having students look up words and answering questions about the symbols used in the key.

5. Be able to recognize and use primary and secondary accent as evidenced by having students place the appropriate accent marks on words given as a written stimulus.

B. Study skills

1. Begin to use SQ3R as evidenced by having students put this into practice in an exercise involving survey, questions, reading, reciting, and review.

GRADE 5

Reading Objectives

I. Vocabulary

A. Word recognition

1. To be able to recognize the new words in the story as evidenced by having students pick the word out of a list of written words given an oral stimulus.

2. To be able to discern likenesses and differences in words as evidenced by having students pick a word given as an oral stimulus out of a group of like words.

B. Word meaning

1. To be able to understand and use more abstract words as evidenced by having students match words with ideas.

2. To be able to understand figurative and idiomatic expressions as evidenced by having students match formal statements with informal statements.

3. To be able to understand the relationships which exist among words (synonyms, homonyms, antonyms, and heteronyms) as evidenced by having students underline in sentences the synonym, homonym, antonym or heteronym of a word given as an oral stimulus.

4. Be able to interpret word meanings as evidenced by having students choose the sentence or phrase which best interprets the meaning of a given written word.

II. Word Analysis Skills

A. Phonic analysis

1. Be able to use phonic analysis in recognizing new words as evidenced by having students pronounce a new word then listen to the correct pronunciation and compare their response.

2. Be able to utilize consonants, vowels, blends and diagraphs in forming new words as evidenced by giving students phonetic parts of a word and having them type the word and by leaving out parts of a word and having them fill in the missing phonic elements.

B. Structural analysis

1. Be able to syllabicate words as evidenced by having students divide given written words into syllables.

2. To be able to understand the effect that change in accent has upon the pronunciation and meaning of words as evidenced by having students shift the accent marks; match phrases with the correct word meanings.

3. Be able to place primary and secondary accent marks in the right place as evidenced by having students place these marks on written stimulus words.

4. To be able to use previously learned concepts about the use of punctuation marks and to apply quotation marks in divided quotations as evidenced by having students participate in review exercises and supply missing quotation marks in sentences.

5. Be able to recognize and know plurals for irregular words as evidenced by having the student give the plural for a written stimulus word.

6. Be able to recognize and use the comparative and superlative forms of adjectives as evidenced by having students give the above forms for a list of adjectives given as written stimuli.

7. Be able to recognize and use the correct parts of verbs as evidenced by having students use the correct verb form in sentences given as a written stimulus and by having students place under appropriate categories the forms for certain verbs given as written stimuli.

8. Be able to recognize and derive adverbs from adjectives as evidenced by having students give the adverbs to be made from adjectives given as a written stimuli; and by making an adjective out of an adverb given as a written stimulus.

C. Context clues

1. Be able to use context clues to find word meaning as evidenced by having students pick from a list of meanings the one best fitting an underlined word in the paragraph or story.

2. Be able to associate ideas with words as evidenced by having students pick from a list of words the one that best states an idea stated in phrase or sentence form.

3. Be able to associate ideas with characters as evidenced by having students choose the correct character to match a list of ideas associated with the characters.

III. Comprehension

1. To be able to understand main ideas as evidenced by having students find details which support or explain ideas.

2. To be able to select a good title for a selection as evidenced by having students choose the best title from several given.

3. To be able to make comparisons and contrasts as evidenced by having students read paragraphs which compare people, places, or events; write the sentences that point out likenesses and differences.

4. To be able to interpret passages meaningfully... cause-effect reasoning, making inferences, generalizing, implied meaning...as evidenced by having students answer questions with multiple-choice answers.

5. To be able to write answers to problems as evidenced by having students answer how and why questions.

6. To be able to organize information as evidenced by having students group or list items that belong together or occur in a certain order.

7. To be able to follow directions as evidenced by having students perform a task when presented with an oral stimulus.

8. To be able to increase reading rate as evidenced by having students complete reading of passages within a prescribed limit of time.

9. Be able to recognize book parts as evidenced by having students find the answers to questions dealing with table of contents, index, copyright, guide words, key, title, and others.

10. Be able to read and use a telephone book, time table, and catalogue as evidenced by having students answer questions dealing with the above.

11. Be able to outline as evidenced by having students outline a given factual article.

12. Be able to establish time sequence of events as evidenced by having students unscramble phrases and sentences of a story.

13. Be able to summarize material as evidenced by having students write in several words the ideas involved in tagnemic structures.

14. Be able to determine mood of a selection as evidenced by having students answer questions dealing with the selection.

15. Be able to classify factual information as evidenced by having students place under appropriate headings given factual information.

16. Be able to predict outcomes as evidenced by having students choose the sentence supplying the best ending for a selection from a list of written sentences.

17. Be able to identify the author's purpose as evidenced by having students choose from a group of sentences the one best depicting the purpose of the author, having been given a reading selection.

18. Be able to recognize the "shifty word fallacy" in critical reading as evidenced by having students choose from several tagnemic structures those that contain the fallacy.

19. Be able to recognize the "either - or - fallacy" in critical reading as evidenced by having students choose from several tagnemic structures those that contain the fallacy.

20. Be able to recognize the "false analogy" in critical reading as evidenced by having students choose from several tagnemic structures those that contain the fallacy.

21. Be able to recognize the "improper data" in critical reading as evidenced by having students choose from several tagnemic structures those that contain the fallacy.

22. Be able to recognize the "inadequate data fallacy" in critical reading as evidenced by having students choose from several tagnemic structures those that contain the fallacy.

IV. Study Skills and Dictionary Usage

A. Dictionary usage

1. To be able to locate material in the dictionaries as evidenced by having students find answers to what, when, where, why, and how questions.

2. To be able to distinguish what part of speech a word is as evidenced by having students look up words in a dictionary and put down the part of speech.

3. Be able to recognize preferred pronunciation as evidenced by giving students several pronunciations of words as written stimulus and have students choose the preferred one, using the dictionary.

4. Be able to alphabetize words as evidenced by having students alphabetize a list of words given as a written stimulus.

5. Be able to use guide words as evidenced by having students use given guide words in finding answers to questions about words in the dictionary.

6. Be able to interpret diacritical markings and pronunciation key as evidenced by having students answer questions dealing with the above.

7. Be able to interpret phonetic respellings as evidenced by giving students phonetic respellings of words and having students use them in writing the words.

8. To have knowledge of library content and practices as evidenced by having students answer questions about the content and practices of a library.

B. Study skills

1. Be able to use the SQ3R method as evidenced by having students attack a reading selection in this manner and answer question about the selection.

GRADE 6

Reading Objectives

I. Vocabulary

A. Word recognition

1. Be able to recognize a word using context clues as evidenced by having the student read a selection in which certain words are underlined and then choose the correct meaning for the word from a list of written meanings.

B. Word meaning

1. To be able to interpret figurative expressions as evidenced by having students match informal statements with formal statements and by supplying missing words in sentences explaining the expressions.

2. Be able to recognize literal meanings of words as evidenced by having students match the meaning of a word with the word itself.

3. To be able to interpret multiple meanings of words as evidenced by having the student choose the correct meaning from a list that corresponds to a sentence in which the word is used.

4. Be able to classify and label objects as evidenced by having students list under certain heading all words given as a written stimulus that belong under that classification.

5. Be able to recognize the root word as evidenced by having students identify the common root of related words given as written stimulus.

6. Be able to use synonyms, homonyms, antonyms and heteronyms as evidenced by having students match a stimulus word to the appropriate one of the above and/or fill in blanks using the above for stimulus words or choose a word from a list to fill in the blank.

II. Word Analysis Skills

A. Structural analysis

1. Be able to syllabicate words as evidenced by having students syllabicate words given as a written stimulus.

2. To be able to use punctuation marks effectively as evidenced by having students supply the proper marks omitted from a selection.

3. Be able to recognize and use simple endings of words as evidenced by having students add endings to words given as a written stimulus and/or fill in appropriate words having added endings in sentences.

4. Be able to place correctly primary and secondary accent as evidenced by having students do so on words given as a written stimulus.

5. Be able to form and use possessives as evidenced by having students form possessives from a list of written stimulus words and subsequently use the words in appropriate blanks in sentences provided.

6. Be able to form and use contractions as evidenced by having students replace two words in a sentence with the correct contraction.

7. Be able to use and understand prefixes and suffixes as evidenced by having students make new words by adding appropriate prefixes and suffixes to written stimulus words and/or having students fill in blanks in sentences using a written stimulus word and an appropriate prefix or suffix.

8. Be able to form and use plurals, irregular and regular, of words as evidenced by having students supply the missing plural form of a written stimulus word in sentences.

III. Comprehension

1. To be able to summarize paragraphs in simple sentences as evidenced by having students paraphrase the selection.

2. To be able to seek information, including the encyclopedia, the card catalogue, the World Almanac, and other reference words as evidenced by having students find answers and solutions to questions and problems.

3. To be able to classify words according to the parts of speech as evidenced by having students change word meanings by affixing elements; use words to modify the same and different words in sentences; categorize words under different moods.

4. To be able to interpret the moods of passages as evidenced by having students place appropriate words or phrases under various headings.

5. To be able to note details as evidenced by having students classify them.

6. To be able to recognize main ideas as evidenced by having students choosing the idea from a group of written sentences.

7. To be able to organize information as evidenced by having students list items, facts, or ideas that belong together or occur in a certain order.

8. Be able to outline as evidenced by having students outline a given factual article by filling in a skeleton form given as a written stimulus.

9. Be able to establish time sequence of events as evidenced by having students put in correct order of events a story or paragraph.

10. Be able to interpret character's feelings as evidenced by having students choose the sentence which best interprets the character's feelings, from a group of sentences given as a written stimulus.

11. Be able to follow directions as evidenced by having students follow correctly directions given in written statements.

12. Be able to draw conclusions as evidenced by having students choose the statement given as a written stimulus, which best answers questions dealing with drawing conclusions from a story or paragraph.

13. Be able to locate information as evidenced by having students locate specific information given as a written stimulus in a story or paragraph by giving the number of the sentence in which the information is located.

14. Be able to recognize "rabbit reasoning" in critical reading as evidenced by having students choose from several tagnemic structures those that contain the fallacy.

15. Be able to recognize "self-contradiction" in critical reading as evidenced by having students choose from several tagnemic structures those that contain the fallacy.

16. Be able to recognize "loaded words" in critical reading as evidenced by having students choose from several tagnemic structures those that contain the fallacy.

17. Be able to recognize "appealing to conformity" in critical reading as evidenced by having students choose from several tagnemic structures those that contain the fallacy.

18. Be able to recognize "red herring" in critical reading as evidenced by having students choose from several tagnemic structures those that contain the fallacy.

IV. Study Skills and Dictionary Usage

A. Dictionary usage

1. Be able to alphabetize words as evidenced by having students alphabetize a list of words given as a written stimulus.

2. Be able to use guide words as evidenced by having students use given guide words in finding answers about words in the dictionary.

3. To have knowledge of library practices as evidenced by having students answer questions about the practices of a library.

B. Study skills

1. To be able to read efficiently as evidenced by having students use the SQ3R method to study material for information.

GRADE 7

Reading Objectives

I. Vocabulary

A. Word recognition

1. Be able to recognize a word using context clues as evidenced by having a student read a selection in which certain words are underlined and then choose the correct meaning for the word from a list of written meanings.

2. Be able to see likenesses and differences in words as evidenced by having students choose those which are alike from a group with both kinds included.

B. Word meaning

1. To be able to select relevant information as evidenced by having students select information that is pertinent to the solution of a problem.

2. To be able to interpret figurative language with ease and facility as evidenced by having students associate many and varied expressions.

3. To be able to organize material with ease and facility as evidenced by having students recall and assign objects, ideas, etc., under different categories.

4. To be able to evaluate selections with ease and facility as evidenced by having students select statements which offer proof for facts presented in selections.

5. To be able to recognize the root word as evidenced by having the student use the root word or a related word in a sentence.

6. To be able to use synonyms, homonyms, antonyms and heteronyms as evidenced by having students match a stimulus word to the appropriate one of the above and/or fill in blanks using the above for stimulus words or choose a word from a list to fill in the blank.

II. Word Analysis Skills

A. Structural analysis

1. To be able to discriminate similar words by having students choose the appropriate word from a list to be used in a given sentence.

2. To be able to syllabicate words as evidenced by having students syllabicate words given as a written stimulus.

3. To be able to use punctuation marks effectively as evidenced by having students supply the proper marks omitted from a selection.

4. To be able to recognize and use simple endings of words as evidenced by having students supply the proper letters that are omitted from a selection.

5. To be able to place correctly primary and secondary accent as evidenced by having students do so on words given as a written stimulus.

6. To be able to form and use possessives correctly as evidenced by having students use the appropriate word in blanks in sentences.

7. To be able to form and use contractions as evidenced by having students replace two words in a sentence with the correct contraction.

8. To be able to use prefixes and suffixes as evidenced by having students make new words appropriate to fill the blanks in sentences using a written stimulus word and an appropriate suffix or prefix.

9. To be able to form and use plurals, irregular and regular, of words as evidenced by having students supply the missing plural form of a written stimulus word in sentences.

10. To be able to use verbs, irregular and regular, as evidenced by having students supply the missing verb form of a written stimulus word in sentences.

III. Comprehension

1. Be able to recognize the "tree-forest fallacy" in the area of critical reading as evidenced by having the student choose from several tagnemic structures those that contain the fallacy.

2. Be able to recognize the "sterotyping fallacy" in the area of critical reading as evidenced by having the student choose from several tagnemic structures given as a written stimulus those that contain the fallacy.

3. Be able to recognize the "spurious fallacy" in the area of critical reading as evidenced by having the student choose from several tagnemic structures given as a written stimulus those that contain the fallacy.

4. Be able to recognize the "mean fallacy" in the area of critical reading as evidenced by having the student choose from several tagnemic structures given as a written stimulus those that contain the fallacy.

5. Be able to recognize the "correct and fallacious reasoning" in the area of critical reading as evidenced by having the students choose from several tagnemic structures given as a written stimulus, the ones that contain the fallacy.

6. Be able to recognize the "proverbs" in the area of critical reading as evidenced by having the students choose from several tagnemic structures given as written stimulus the ones that have the same meaning.

7. To be able to derive appropriate word meanings as evidenced by having students participate in review exercises.

Examples of Lesson Objectives

Grade 2

1. "LAWS AND LIGHTS"

New words
- Attach synonymous meaning
- Alphabetizing
- Word perception and recognition

Read story
- Find main idea

Study skill
- Review one letter alphabetizing

Like word parts - er, ay, ed

Word meanings

2. "A FINE FIX"

Present new words and reinforce new words
- Word meanings
- "Synonym"
- Vowels a, o, e, i
- Apostrophe

Read story
- Find details to answer questions

3. "OCCUPATION I"

Present new words and meanings
- Teach plurals
- Teach ing ending
- Drawing conclusions
- Word usage

Read story
- Find details to answer questions

Study skill
- Review one letter alphabetizing

4. "TREASURE LAWS"

New words
- Antonyms
- Concept of fourths

Drawing conclusions
Read story
- Main ideas, meanings, inferences
- Find details to answer questions

Study skill
- Alphabetize two letters

5. "HOW MAN MADE PAPER"

Present new words and meanings
- Reasoning and drawing conclusions
- Antonyms
- Visual similarity

Read story
Study skill
- Review two letter alphabetizing

6. "YOU CAN HELP"

New words
- Idiomatic meanings
- Past tense of to lose.
- Affix ed to base word
- Table of contents

Read story
- Follow directions, find details to answer questions - deductive reasoning

7. "BARBERING"

New words - meanings
- Sentence building-matching
- Reading for comprehension

Read story
- Follow directions, find details to answer questions

Study skill
- Finding main ideas

8. "BINGO AND THE LAW"

New words - meaning of schwa vowel
- Plural - ies,s
- Key words for comprehension
- Pick out roots
- Adding ed, ing, and d to base words
  past tense and present
- Main idea
- Consonants

Read story
- Find proof
- Deductive reasoning, recall
- Words changing from present tense to past

Study skill
- Review meanings, opposites, similarities

9. "CELLS: BUILDING BLOCKS OF LIFE"

New words
- Plurals - ies
- Visual similarities
- Consonants - s,t,h, blends - st, sh, th
- Affix er and est to base word

Read story - comprehension
- Find details to answer questions

10. "YOUR CHILDREN'S FEET"

New words-meanings
- Compound words
- Review ing
- Putting things in sequential order
- Homonyms
- Antonyms

Read story

Study skill
- Recall information

APPENDIX C

A Sample of a Reading Lesson for Second Grade

"Bingo and the Law"

2law3001

```
qun
 fn save// //c9,1,1
 qu Type in tape control character:  1 for on;
    2 for off.
 ca 1
 fn save//1//c9,1,1
 ca 2
 un Type 1 or 2.
 rd What time is it now?
 qu //ssoox//
```

2law3001a

```
 qu
 fn save//2law3001b//c9,3,9
 fn brif//tapes1//c9,2,1//e//1
```

2law3001b

```
 qu //ss71x//
 qu //ss79//Did you know that you can break the
    law if you play the game bingo?  Playing
    bingo is sometimes _ _ _ _ _ _ _ the law.
    Type the missing word.
 fn save//x//c9,1,1
 ca against
 ty Very good.
 br 2law3005
 wa again
 ty Yes, you have typed the missing letters.
    But please type all the new word.
 wa against
 fn ch  '/f7
 ty You have typed too many letters.  Your first
    7 letters are right.  Try again.
 fn char//f1
 br 2lagain2
 un Let's try this.
 br 2lagain1
```

2lagain1

qu The letter a begins this word. In this word
a has the sound as in the words: about and
around. Type the letter a.
ca a
ty You are right.
ca against
ty You are a step ahead!
br 2law3005
un Look over your answer and try again.
un Type the letter a.

2lagain2

qu The first letter of the word is a. The
last 6 letters are g a i n s t. There are
two parts in our word: a g a i n s t.
Put the two parts together and type all of
the new word.
ca against
ty Yes, good.
wa a
ty Type the word a g a i n s t.
un Look over your answer and try again.
un Type the word: a g a i n s t.

2lagain3

qu Bingo may be _ _ _ _ _ _ _ _ the law. Type
all the new word.
ca against
ty Very good.
br 2law3005
wa against
fn char//f7
ty There are too many letters. Your first 7
are right. Try again.
fn char//f1
br 2lagain2
un Let's try this.
br 2lagain1

2law3005

qu //ss80x//It might be against the law.
Against in the sentence means:
1. upon.
2. getting ready for.
3. not following.
Type the number of your answer.
ca 3
ty Very good.
wa 2
ty Against in the above sentence means that you would be breaking the law if you played the game. Try again.
wa 1
ty It might be upon the law? Come now, does that sentence sound right to you? Now try again.
un Look over your answer and try again.
un Type 1, 2, or 3.

2law3006

qu
fn save//2law3006a//c9,3,9
fn brif//tapes2//c9,2,1//e//1

2law3006a

qu //ss80//You have seen the word schwa. It looks like an upside down e in your dictionary. Each vowel letter---a,e,i,o,u and sometimes y and w---can have the schwa sound in some words. When the letter a has the schwa sound, it sounds like the a in the word against. Type the word schwa.
ca schwa
ty Very good!
un Try again.
un Type the word schwa.

qu The letter a in the word about has the _ _ _ _ _ sound. Type the missing word.
ca schwa
ty Very good.
un Try again.
un Type the word schwa.

21aw3006b

```
qu
fn save//21aw3006c//c9,3,9
fn brif//tapes3//c9,2,1//e//1
```

21aw3006c

```
qu //ss71x//Let's look at the word vowel.  The
   vowel letters are a, e, i, o, u, and sometimes
   y and w.  Type the word vowel.
ca vowel
ty Fine.  Keep this word in mind also.  You will
   see it many times.
un Try again.
un Type the word vowel.

qu The letters a, e, i, o, u, and sometimes
   y and w are all _ _ _ _ _ _ s.  Type the
   missing word.
ca vowels
ty Very good.
wa vowel
ty Type the word vowel with an s on the end.
   Try again.
un Look over your answer and try again.
un Type the word vowels.
```

21aw3009

```
qu
fn save//21aw3010a//c9,3,9
fn brif//tapes4//c9,2,1,//e//1
```

21aw3010a

```
qu //ss71//The word l o t t e r i e s means
   games which are against the law in some
   states.
   Type the new word.
ca lotteries
ty Very good.  You are right.
br 21aw3011
```

wa lotteries
fn char//f9
ty You have typed too many letters. Your first 9 letters are right. Try again.
fn char//f6
br 21lotter3
fn char//f4
br 21lotter2
un Here is some spelling help.
br 21lotter1

21lotter1

qu The new word is l o t t e r i e s. The first four letters are l o t t. Type these first four letters.
ca lott
ty Yes, good for you.
ca lotteries
ty Good. You typed the whole word.
br 21aw3011
un Look over your answer and try again.
un Type these letters: l o t t.

21lotter2

qu The next two letters are e r. These added to the first four letters give l o t t e r. Type the letters l o t t e r.
ca lotter
ty You are right.
ca lotteries
ty Good for you. You typed the whole word.
br 21aw3011
un Look over your answer and try again.
un Type the letters l o t t e r.

21lotter3

qu The last three letters are i e s. These letters are ending letters. They can be put on some words to make them plural, or mean "more than one." lottery lotteries
baby babies lady ladies
Now type the whole word l o t t e r i e s.

ca lotteries
ty Yes, very good.
br 21aw3011
un Look over your answer and try again.
un Type this word: l o t t e r i e s.

21aw3011

qu //ss72x//Bingo and some other games are
called _ _ _ _ _ _ _ _ _.
Type the missing word.
ca lotteries
ty Very good.
un Look over your answer and try again.
un The answer is l o t t e r i e s. Type
the word l o t t e r i e s.

21aw3012

qu
fn save//21aw3013a//c9,3,9
fn brif//tapes5//c9,2,1//e//1

21aw3013a

qu Games in which numbers are called out in
no set order are called games of c h _ _ _ _.
Type the new word.
ca chance
ty Very good. You are right.
br 21aw3015
wa ance
ty Very good. You typed the missing letters.
Please type all the new word.
wa chance
fn char//f6
ty You have typed too many letters. Your first
6 letters are right. Try again.
fn char//f2
br 21chance2
un Here is some spelling help.
br 21chance1

21chance1

qu The first two letters of the word are the
letters c h. Other words beginning with c h
are: chair children chance.
Type the letters c h.
ca ch
ty Yes, very good.
br 21chance2
ca chance
ty Good for you. You typed all the new word!
br 21aw3015
un Look over your answer and try again.
un Type the letters: c h.

21chance2

qu The last four letters after c h are a n c e.
Put these two parts of the word together
and type the new word.
ca chance
ty Yes, very good.
br 21chance3
un Look over your answer and try again.
un Type the letters: c h a n c e.

21chance3

qu He took a c h _ _ _ _ and won the game.
Type the missing word.
ca chance
ty Very good, you are right.
br 21aw3015
wa ance
ty Good, you g t the right missing letters.
Please type all the new word.
wa chance
fn char//f6
ty You have typed too many letters. Your first
6 letters are right. Try again.
fn char//f2
br 21chance2
un Here is some spelling help.
br 21chance1

qu //ss72//When you want to show that things happened in the past, the ending e d is put on some words to make them past time, as: I walk to work now. I walked to work yesterday. Find a word on your slide which has an ed ending. Type this word.
ca called
ty Very good.
un Look with care and make sure you are right. Try again.
un Type this word: called.

qu //ss73x//I am going to jump over the fence. You jump the fence next. She has already jump__ the fence.
Type the letters that you would add to the word jump to make it show that it happened in the past.
ca ed
ty Yes. She has already jumped the fence.
ca jumped
ty Yes, very good.
wa es
ty Let's try this.
br 21aw3015
un Look over your answer and try again.
un Type the word jumped.

qu Add ed to these words: ask, clean, cook. Then type the words you get.
fn save// //c9,1,1
ca askedcleanedcooked
fn kl//1
ty Yes, very good.
ca kednedked
fn kl//1
ty Good, but watch your spelling.
ca asked cleaned cooked
fn kl//3
ty You get an "A."
wa asked cleaned cooked
fn kl//2
ty You got two right. Try again.

wa asked cleaned cooked
fn kl//1
ty You got one right. Try again.
un Look over your answer and try again.
un Be sure to type 3 words, all ending in ed.
Try again.
un Type these words: asked cleaned cooked.

qu Choose the right word and type it.
My sister _ _ _ _ _ _ _ me yesterday.
(visiting, visited)
ca visited
fn editls//all
ty Good.
wa visiting
fn editls//all
ty She isn't here now. She was here yesterday.
Try again.
un Look over your answer and try again.
un Type: visited or visiting.
un Type the word visited.

qu Choose the right word and type it.
Last night I _ _ _ _ _ _ _ my hands by the
(warm, warmed)
open fire.
ca warmed
fn editls//all
ty Very good.
wa warm
fn editls//all
ty What word will show that you have already done it? Try again.
un Type: warm or warmed.
un Type warmed.

qu //ss72//Look at the three questions on your slide. There is one key word in each question. These three words could tell if a game was a lottery or not. Type these three words.
ca pay win chance
fn kl//3
ty You got them all right.

```
ca paywinchance
ty Good for you.
wa pay win chance
fn kl//2
ty You got two right.  Try again.
wa pay win chance
fn kl//1
ty You got one right.  Try again.
un Be sure to type 3 words.  Try again.
un Type these words:  pay win chance.
```

2law3020

```
qu
fn save//2law3021a//c9,3,9
fn brif//tapes6//c9,2,1//e//1
```

2law3021a

```
qu //ss73x//When you play Bingo, you put buttons
   or numbers on a _ _ _ _.  Type the missing
   word.
fn save//x//c9,1,1
ca card
ty Very good.  You are right.
br 2law3022
wa card
fn char//f4
ty You have typed too many letters.  Your first
   4 letters are right.  Try again.
fn char//f1
br 2lcard2
un Here is some spelling help.
br 2lcard1
```

2lcard1

```
qu The new word sounds like hard and yard,
   but it begins with c.  The c has the same
   sound as in coin.  Type this letter c.
ca c
ty Good.
```

ca card
ty Good, you knew all the new word.
br 21aw3022
un Look over your answer and try again.
un Type the letter c.

21card2

qu The letters after c are a r d. Put these two parts together and type the whole word.
ca card
ty Good.
wa c
ty Add the letters a r d and type: c a r d.
wa ard
ty Add the letter c and type the word: c a r d.
un Look over your answer and try again.
un Type these letters: c a r d.

21card3

qu My c _ _ _ won the Bingo game. Type the whole word.
ca card
ty Very good.
wa ard
ty You have typed the missing letters. Please type all the new word.
wa card
fn char//f4
ty There are too many letters. Try again.
fn char//f1
br 21card2
un Here is some spelling help.
br 21card1

21aw3022

rd //ss71//Now read the first three slides of your story. After you have read each slide, send an EOB.
rd //ss72//
rd //ss73//

2law3023

qu //ss73//Now look over this part of the story
on the slide. Then choose the best answer
to this question. What is this part of the
story all about?
a. buying a ticket
b. getting a card
c. paying to play
Type the letter of your answer.
ca c
ty Good work! Paying to play is right.
wa a
wb b
ty This part of the story talks about buying
a ticket or getting a card, but this is
just part of the first question: Do you have
to pay to play? Now try again.
un Look over your answer and try again.
un Type a, b, or c.

rd //ss74//Read this slide and send an EOB.
qu Which question is answered by what you
have just read? Type the number of your
answer.
1. Do you have to pay to play?
2. Are the numbers called out by chance?
3. Can you win something?
ca 2
ty Very good!
wa 1
ty Are you sure? Read the slide again. Then
try again.
wa 3
ty No, try again.
un Type number 1, 2, or 3.
un Type the number 2.

2law3028

qu There are two kinds of letters in the alphabet.
The vowels are a, e, i, o, u, and sometimes
y and w. All the other letters are called
consonants. Is the letter b a vowel or

consonant? Type your answer.
ca consonant
ty You are right.
ca cnsnt
fn kl//1
ty Good, but watch your spelling.
wa vowel
ty Let's try this over again.
br 21aw3028
un Look over your answer and try again.
un Type the word: consonant. Remember these are the vowels: a, e, i, o, u, and sometimes y and w.

qu eat against if card Bingo lotteries
every out
Type all the words that begin with a consonant.
fn save// //c9,1,1
ca Bingo card lotteries
fn kl//3
ty Yes, good.
ca B c l
fn kl//3
ty Good for you, but watch your spelling.
ca bingocardlotteries
ty Good for you.
ca b c l
fn kl//3
ty Good, but watch your spelling!
ca bingo card lotteries
fn kl//3
ty Very good.
wa eat against out every
fn kl//1
ty A, e, and o are vowel letters. Try again.
un Look over your answer and try again.
un Remember, only a, e, i, o, u, and sometimes y and w are vowels. All other letters are consonants. Try again.
un Type these words: Bingo card lotteries.

qu eat against Bingo lotteries long card
mother out
Type the two words that begin with the consonant l.
fn save//x//c9,1,1
ca longlotteries
cb lotterieslong
ty Good for you!
un Look over your answer and try again.
un Type the words: long lotteries.

qu eat against Bingo lotteries long card
mother out
Find the word that ends in a vowel letter.
Type the word.
ca bingo
cb o
ty That's right. All other words end in consonants.
un Look over your answer and try again.
un Remember, the vowels are a, e, i, o, u, and sometimes y and w. Now try again.
un Type the word: bingo. It ends in the vowel o.

2law3032

qu Now let's go back to the new words in the story. If your work is not hard, then it is e _ _ _. Type the new word.
ca easy
ty Very good. You are right!
br 2law2033
wa asy
ty You have typed the missing letters. Please type all the new word.
wa easy
fn char//f4
ty You have typed too many letters. Your first 4 letters are right. Try again.
un Here is some spelling help
br 2leasy1

2leasy1

qu This is the new word: e a s y. Now you type the word e a s y.

ca easy
ty You are right.
br 21aw2033
un Look over your answer and try again.
un Type the word: e a s y.

21aw2033

qu Jim had an e _ _ _ job while John had a
hard one.
Type the missing word.
ca easy
ty Good.
wa asy
ty You are right, but type all the new word.
un Look over your answer and try again.
un Type the word: e a s y.

21aw2034a

qu
fn save//21aw2034b//c9,3,9
fn brif//tapes7//c9,2,1//e//1

21aw2034b

qu What word means it does not make any difference?
Type the missing word.
It does not _ _ _ _ _ _ whether I go to the
movies or go to the party.
ca matter
ty Very good.
br 21aw2035
wa matter
fn char//f6
ty You have typed too many letters. Try again.
fn char//f4
br 21matter3
un Let's try this.
br 21matter1

21matter1

qu The new word is m a t t e r. The first
four letters are m a t t. The vowel a has

the short sound as in cat. The second t has no sound. Type the letters m a t t. Then send an EOB.
ca matt
ty Fine.
br 21matter3
ca matter
ty Good. You knew all the new word!
br 21aw2035
un Look over your answer and try again.
un Type these letters: m a t t.

21matter3

qu The first four letters are m a t t. The last two letters are e r. The vowel e in this word has the schwa sound. Type m a t t with the letters e r.
ca matter
ty Good.
br 21matter2
un Look over your answer and try again.
un Type the word: m a t t e r.

21matter2

qu There is something the _ _ _ _ _ _ with my dog.
Type all of the new word.
ca matter
ty Very good.
br 21aw2035
wa matter
fn char//f6
ty You have used too many letters. Try again.
fn char//f4
br 21matter3
un Let's try this
br 21matter1

21aw2035

rd //ss75//Now read the rest of the story. After you have read each slide, send an EOB.

rd //ss76//
rd //ss77//
rd //ss78//

2law2036

qu //ss78x//Bingo is not a lottery if played at home. Is this sentence right? If it is, type true. If it is not right, type false.
ca false
ty Good, you are right!
wa true
ty You are right, but only if all these questions were answered "no." If you answer the three questions "yes," then Bingo is a lottery even if played at home. Now type false to the question.
un Look over your answer and try again.
un Type true or false.

qu Type true or false. Bingo becomes a lottery only if one pays over a dollar to play.
ca false
ty Very good.
wa true
ty If you pay even one cent to play Bingo then it is a lottery. Try again.
un //ss76//Look over the slide and then type true or false.
un Type false.

qu //ss77x//Now type one word that means almost the same as: does not make any difference. If something does not make any difference, it does not _ _ _ _ _ _.
ca matter
ty Good.
ca at
fn kl//l
ty Yes, but watch your spelling!
un Look over your answer and try again.
un Type the word: m a t t e r.

2law3044

qu Your slide says, "Many people have played Bingo at home, at m _ _ _ _ _ _ _, and at fairs." Type the missing word.
ca meetings
ty Very good. You are right.
br 2law3050
wa eetings
ty You have typed the missing letters. Please type all of the new word.
wa meetings
fn char//f8
ty You have typed too many letters. Your first 8 letters are right. Try again.
fn char//f7
br 2lmeet3
fn char//f4
br 2lmeet2
un Here is some spelling help.
br 2lmeet1

2lmeet1

qu The first four letters make the word m e e t. Did you m e e t your friends at the party last night? Type the word m e e t.
ca meet
ty Yes, that is right.
br 2lmeet2
ca meetings
ty You are one step ahead.
br 2law2050
un Look over your answer and try again.
un Type the word m e e t.

2lmeet2

qu If you take the word meet and add the ending letters i n g, you will make the word m e e t i n g. You can add these ending letters i n g to many other words to make new words.

bake + ing = baking
see + ing = seeing
saw + ing = sawing
Add the letters i n g to m e e t. Then type the word.
ca meeting
ty Good for you.
br 21meet3
ca meetings
ty You are one step ahead.
br 21aw3050
wa ingmeet
ty The i n g ending goes at the end of the word m e e t. Try again.
un Look over your answer and try again.
un Type the word m e e t i n g.

21meet3

qu If you add the letter s to the word m e e t i n g, you make the word m e e t i n g s. Do this now. Type the word m e e t i n g s.
ca meetings
ty Good.
br 21aw3050
un Look over your answer and try again.
un Type the word: m e e t i n g s.

21aw3050

rd //ss71// Now read the whole story. When you have read each slide, send an EOB.
rd //ss72//
rd //ss73//
rd //ss74//
rd //ss75//
rd //ss76//
rd //ss77//
rd //ss78//

2law3051

qu //ss78x//How is Bingo played at a party?
Type three words for your answer.
ca justforfun
ty Good. You got it right.
ca fun
fn kl//1
ty Good.
un //ss77//J _ _ _ for f _ n. Try again. Look at the slide if you need help.
un Type this: just for fun.

qu //ss78x//What do you call the game when one doesn't pay to play? It is a "g _ _ _ a _ _ _" game.
Type two words for your answer.
ca giveaway
ty Wonderful!
ca geaw
fn kl//1
ty You are right, but watch your spelling!
wa i"eway
ty You have typed the missing letters. Please type all of the two words.
un You don't have to pay anything. Try again.
un //ss77//Type two words. Try again. Look at the slide if you need help.
un Type this: give away.

qu //ss78x//When is a game not a lottery? It is not a lottery when you don't have to _ _ _.
Type your answer.
ca ifyoudonthavetopay
ty Yes, right you are!
ca pay
ty Good.
un It is not a lottery when you don't have to p _ _.
Now try again.
un Type the word: pay.

qu Type yes or no. Are all "give away" games
against the law?
ca no
ty Very good.
wa yes
ty //ss77//Read the part of the slide again.
Then try again. The story says "Most give
away games are against the law." But are
all of them against the law? Try again.
un Look over your answer and try again.
un Type yes or no.

qu //ss78x//You will not break the law about
lotteries because you know the three
q u _ _ _ _ _ _ _ s to ask. You will
remember to ask three q u _ _ _ _ _ _ _ s
when you play Bingo for prizes.
Type the missing word.
ca questions
ty Right.
ca qstns
fn kl//1
ty Yes, good, but watch your spelling!
un The word begins with q and ends with the
letter s. Now try again.
un The word has nine letters. Try again.
q u e s t _ _ _ s.
un Type this word: q u e s t i o n s.

21aw3060

qu You have learned that one way to show time is
to add the ending ed to some words. Suppose
a word ended in e, like the word bake. Would
you still add ed?
Type yes or no.
ca no
ty Very good. You think well.
wa yes
ty Doesn't this look funny: He was fineed ten
dollars. She bakeed a cake.
Try again.
un Type yes or no.

qu On some words only the letter d is added to show "past time."
bake + d = baked
cage + d = caged
store + d = stored
Now type the word b a k e d.
ca baked
ty Very good.
un Look over your answer and try again.
un Type the word baked.

qu Some words that end in e don't add d or ed to show past time. The whole word changes. Here are some: give=gave take=took have=had make=made
qu Match these words.

1. lottery	a. doesn't follow the law
2. break	b. chance game
3. card	c. lucky numbers

Type the right letter for number 1 only.

ca b
ty Yes, you are right.
wa a
ty A lottery is a chance game. Remember those lotteries that are played just for fun are not against the law. Now try again.
wa c
ty This answer goes best with another number. Try again.
un Look over your answer and try again.
un Type the letter a, b, or c.
un Type b.

qu Now type the letter of the answer that best matches number 2 only.
ca a
ty Right
wa b
ty In our story, break means not following the law. "You don't want to break the law." Now try again.

wa c
ty This answer goes best with another word.
Try again.
un Look over your answer and try again.
un Type either a, b, or c.
un Type a.

qu Now type the letter of the answer that best
goes with number 3.
ca c
ty Very good.
wa a
ty If you break the law you do not follow the law.
Try again.
wa b
ty A lottery is a chance game. Lucky numbers are
put on a card. Now type the letter of the
right answer for number 1.
un Look over your answer and try again.
un Type a, b, or c.
un Type c.

qu What is the opposite of number 1.
1. true a. for
2. against b. false
ca b
cb false
ty Very good.
wa a
ty If something is true it is right, if something
is not right, then it is f _ _ _ _ _. Try again.
un Look over your answer and try again.
un Type this: b.

qu Now type the letter of the answer that is the
opposite or antonym of number 2: against.
a. for b. false
ca a
cb for
ty Very good.
wa b
wb false
ty Remember false was the antonym for true.
Try again.
un Look over your answer and try again.

un Type a or b.
un Type a.

qu Match the words that have the same or almost the same meanings:
1. legal a. money
2. coin b. within the law
Type the number and then the letter of the best answer.
ca 1b2a
cb 2a1b
ty Very good.
wa 1a2b
wb 2b1a
ty Legal means within the law. Coin is a kind of money. Try again.
un Look over your answer and try again.
un Type this: 1b2a.

2law3061

qu Type the number of the best name for the story:
1. Little known facts about Bingo
2. All about Bingo
3. Bingo and You
ca 1
ty Very good.
wa 2
ty No, the story doesn't tell everything there is to know about Bingo. Try again.
wa 3
ty It is about part of the story but not all of it. Try again.
un Type 1, 2, or 3.

qu Think about your story. It really has two big parts. Type the numbers from the list below that you think are the two big parts of the story.
1. When it is within the law to play Bingo.
2. How to play Bingo and win.
3. When it is against the law to play Bingo.
4. What might happen if a person plays Bingo.

ca 13
cb 31
ty You think well.
un Look over your answer and try again.
un Type 1, 2, or 3.

qu Now let's look at some more words. What letters are the same in all of these? Type them: bar bill belt.
ca b
ty Good.
un They all begin with the same letter. Try again.
un Type this: b.

qu What letter or letters are the same in all of these words?
hard card lard
ca ard
ty Very good.
un Look over your answer and try again.
un Type this: ard.

qu What letter or letters are the same in all of these words?
matter lottery kitten cotton
ca tt
ty Very good.
un Look over your answer and try again.
un Type this: tt.

qu What letter or letters are the same in all of these words?
learned played cooked
Type the letter or letters.
ca ed
ty Fine.
un These letters show past time when added to some words. Try again.
un Type this: ed.

21aw3070

rd //ssoox//Did you learn some new words in this story? Think about them. Did you find that some words are alike in many ways? Did you learn that ed endings on some words mean past time? Did you find out something about the lottery law? Do you feel that you can read better now? If most of your answers are yes, then this story helped you. See you in the next story. Send an EOB.

lastlable

qu The end of the story.
un Sign off please.

tapes1

qu //pt1//pt2x//
fn br//c9,3,9//error

tapes2

qu //pt2//pt3x//
fn br//c9,3,9//error

tapes3

qu //pt3//pt4x//
fn br//c9,3,9//error

tapes4

qu //pt4//pt5x//
fn br//c9,3,9//error

tapes5

qu //pt5//pt6x//
fn br//c9,3,9//error

tapes6

```
qu //pt6//pt7x//
fn br//c9,3,9//error
```

tapes7

```
qu //pt7//pt8x//
fn br//c9,3,9//error
```

error

```
rd Call the proctor.
qu Tape return error.  Check listing and type
   out before executing "go to" command.
un Try "go to" command.
```

BINGO AND THE LAW

Slide 71 — Do you often play Bingo? Watch out! The games might be against the law! That is right. In many states, Bingo games are against the law. These games break the law against lotteries.

Slide 72 — How can you tell if a game is a lottery? Ask yourself these three questions. They will tell you if the game is against the law.

1. Do you have to pay to play?
2. Are the numbers called out by chance?
3. Can you win something?

Slide 73 — Look at the first question. It asks how you get your Bingo ticket. Do you pay for it? Do you have to pay to get into the game? Do you get your card after buying something in a store? If so, you are paying to play.

Slide 74 — Now look at question two. It asks how the game is played. For almost every Bingo game, the answer to question two is yes. A man will take something out of a box. It will have a number on it. The man will call out this number. Then you look to see if the number is on your card. If it is and other numbers that he calls are also on your card, you win. You did not have to do anything to win. It was just by chance, so the game is a lottery.

The last question is an easy one to answer. Will you get something if you win? If so, answer it yes.

Slide 75 — If the answers to all three questions are yes, the game is a lottery. This is so even if you are playing at home.

Slide 76 — The law covers all Bingo games, big or little. It does not matter if you have to pay ten cents or ten dollars. It does not matter if you win a dish, or a new car or money. If all three questions can be answered yes, then the game is a lottery.

Slide 77 Are there any Bingo games that are not against the law? Yes, some games are not against the law. Do you play "Just for fun?" If you do not pay or play to win something, the game is not against the law. Sometimes you can find a "give away" game. If you do not have to pay to play, the game is not a lottery. But even most "give away" games are against the law. You "pay" for your card by buying in the store.

Slide 78 Many people have played Bingo. They have played Bingo at home, at meetings and at fairs. They have even played over the radio. These games were not stopped. But some of them should have been! Some of them were against the law. Some of them were lotteries.

Slide 79 Show a Bingo card.

Slide 80 Show a schwa (then show it underlined in words such as about, around, etc.)

APPENDIX D

Anecdotal Records for One Group of Arithmetic Students

ANECDOTAL RECORDS

Section I - Arith. I

1. The students were approached by the counselors of the MDTA project from which they were selected.

2. The students were somewhat reluctant to participate in the research.

3. The vocational instructor then met with the students and the counselors. Prospective students were told very general details about the program; such as, the intent to develop instructional methods and materials which might some day benefit many students. They were given a very brief explanation of the computer.

Primarily, they were conditioned to expect a typewriter keyboard as a student terminal. They were told that errors would not damage the equipment, since they had asked questions which indicated that they were concerned about such damage. In answer to the query as to why they were chosen as subjects, they were told that choice was based primarily upon the time at which they had General Education classes scheduled and the time that the computer was available. It was quite apparent that they wanted no part of any test or program that might reflect upon their capabilities. They were willing to help, but did not want to participate if they were to be the recipients of help.

Upon arriving at the Computer Center the students were then introduced to the computer terminal and a general explanation was given as to how the student operates the typewriter keyboard. This was done with the use of the Welcome Program. It was found that for choices available in the program the selection "Population" seemed to best illustrate the use of the computer. It served also to interest the subjects in using the typewriter terminal and the CAI instruction.

The students had considerable difficulty in reading the program questions because the questions are somewhat obscured by the typing head. This could be corrected in

future programs by entering the final line on the "qu" and then, after the carriage return is entered, entering a line feed which would, in effect, move the question up one space so that it would not be obscured by the head. (This procedure may be followed on all typed messages; rd, ty, un, etc.)

The following are comments which apply specifically to the individual subjects which were run through the program.

S3001 - This subject was very shy and cautious. She had difficulty in seeing distinctly as well as difficulty in seeing over the typing head. Only two questions presented a problem of interpretation for this subject. In counting the number of "ones," she interpreted "one, one" as eleven. The question which contains only a question mark bothered the student, even after an explanation. Although she finally got the answer correct, she still did not understand why, and one would question whether she actually had a concept of what was meant by this question.

S3002 - This subject had no particular difficulty with the program and seemed to enjoy going through the program very much.

S3003 - This subject proceeded through the program. She did not encounter any unusual difficulties, and seemed to enjoy going through the program.

S3005 - This student had difficulty in seeing over the typing head.

S3008 - Interpreted 1 - 1 as eleven. Had difficulty with questions involving zero.

S3010 - Subject had difficulty in seeing over the typing head. Here again, the question which contains only a question mark and the question which contains a question mark and a zero showed that the student really did not understand the correct answer even though she finally got it. This subject was very forgetful, and would forget instructions more readily than the other subjects tested. She had asked how to enter a two-digit number into the computer and had had explained to her that in writing a number such as fourteen, you write first the

1 and then the 4. She went through this same process on the computer. She was inclined to be easily confused.

S3011 - This subject was a very slow student. He was very deliberate in his responses. He seemed to have some impediment of speech. However, I learned later that it was surprising that he could say anything because he had such a large wad of tobacco in his mouth. He had no particular trouble with the program with the exception of the two questions which referred to the zeroes.

S3012 - This subject was a very quiet student. He had no particular difficulties except with the zero responses.

S3014 - This subject was very cautious. He too was thrown by the question involving zero. He had some difficulty reading the letters which were placed in a vertical position on the type out. Some of these letters are obscured by the bar for the paper which goes across the front of the typing.

S3015 - This subject was very deliberate. He was slow; he had difficulty with the questions involving zero and some difficulty learning to use the EOB.